Dist	COUNTY	ROUTE	POST MILES TOTAL PROJECT	SHEET No.	TOTAL SHEETS
12	Ora	22,405, 605	R0.3/R0.9, 22.3/24.0,3.0/R1.6	701	1929

REGISTERED CIVIL ENGINEER — 12/22/09 DATE

2-1-10 PLANS APPROVAL DATE

REGISTERED PROFESSIONAL ENGINEER — JULIET SU No. C56168 Exp.12/31/10 CIVIL — STATE OF CALIFORNIA

THE STATE OF CALIFORNIA OR ITS OFFICERS OR AGENTS SHALL NOT BE RESPONSIBLE FOR THE ACCURACY OR COMPLETENESS OF ELECTRONIC COPIES OF THIS PLAN SHEET.

MTS
16795 VON KARMAN AVE
SUITE 205
IRVINE, CA 92606

ORANGE COUNTY
TRANSPORTATION AUTHORITY
550 S. MAIN STREET
ORANGE, CA 92863-1584

NOTES:

1. FOR COMPLETE RIGHT OF WAY AND ACCURATE ACCESS DATA, SEE RIGHT OF WAY RECORD MAPS AT DISTRICT OFFICE.
2. SEE SHEET SC-95 FOR SECTIONS B-B, C-C AND D-D.

CURVE DATA				
No.	R	Δ	T	L
226	3,000.00′	04°01′30"	105.42′	210.75′
227	500.00′	31°37′52"	141.63′	276.03′

CONSTRUCTION NOTES THIS SHEET:

1 Const PORTION OF NB Pvmt.
2 Const PORTION OF SB Pvmt.
3 Const DRAINAGE SYSTEM. SEE DRAINAGE PLANS.
4 Const PORTION OF "SB-1" LINE.
5 Const PORTION OF "SB-2" LINE.
6 Const OH SIGN. SEE SIGN PLANS.
7 Const Temp RAMP, "TSB-1" LINE.
8 Const Temp Pvmt. CONSECUTIVE OVERNIGHT LANE CLOSURES REQUIRED.

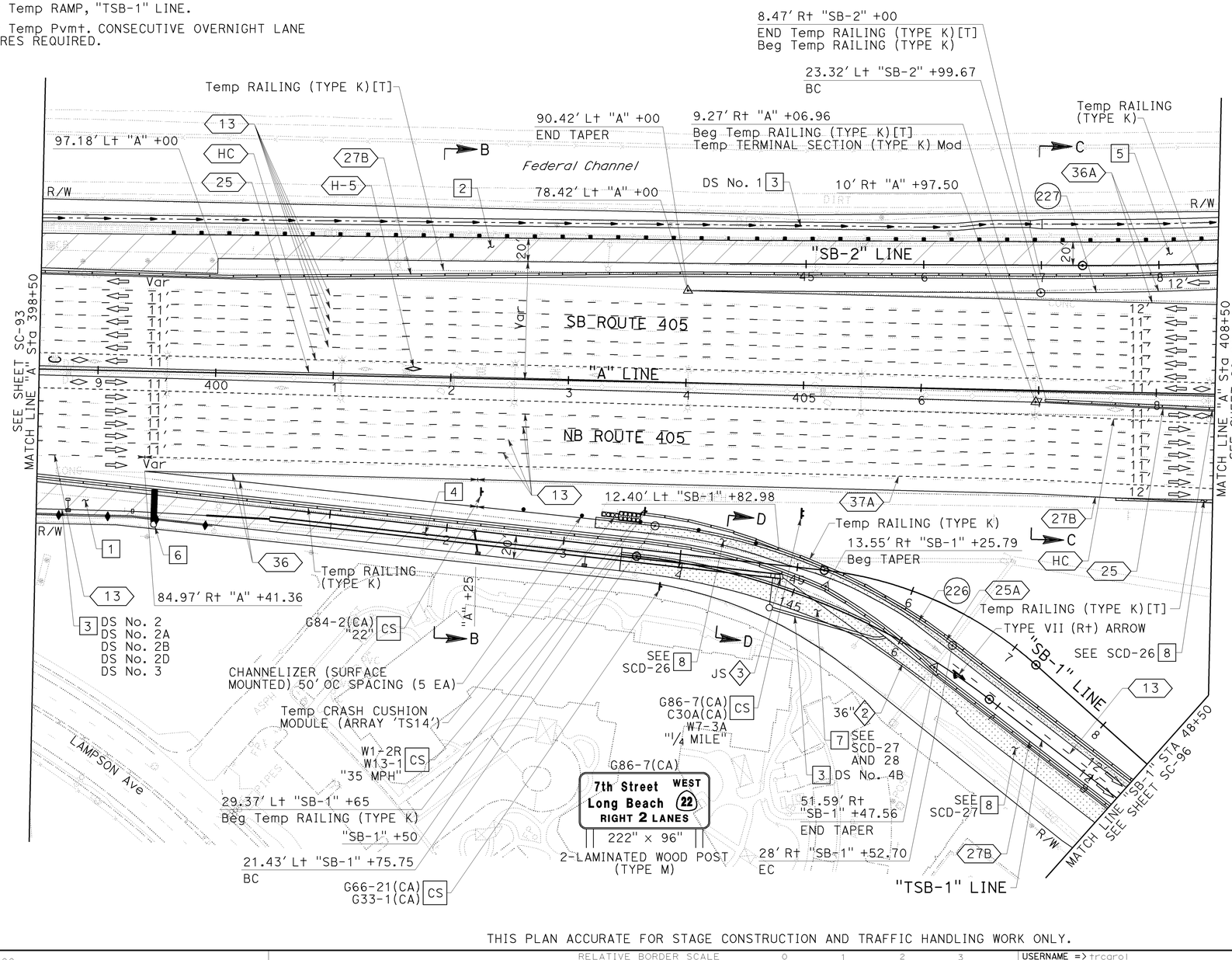

THIS PLAN ACCURATE FOR STAGE CONSTRUCTION AND TRAFFIC HANDLING WORK ONLY.

STAGE 2B.1

STAGE CONSTRUCTION AND TRAFFIC HANDLING PLAN

SCALE: 1" = 50′

SC-94

REVISED BY	DATE REVISED
KLA	12/22/09

CALCULATED-DESIGNED BY: KELSIE ANDERSON
CHECKED BY: JULIET SU
CONSULTANT FUNCTIONAL SUPERVISOR: LEONARD SEQUEIRA
STATE OF CALIFORNIA - DEPARTMENT OF TRANSPORTATION

LAST REVISION DATE PLOTTED => 03-FEB-2010
TIME PLOTTED => 13:15
08-10-09

BORDER LAST REVISED 8/1/2008 | RELATIVE BORDER SCALE IS IN INCHES 0 1 2 3 | USERNAME => trcarol DGN FILE => c07163ma094.dgn | CU 12235 | EA 071631

Dist	COUNTY	ROUTE	POST MILES TOTAL PROJECT	SHEET No.	TOTAL SHEETS
12	Ora	22,405, 605	R0.3/R0.9, 22.3/24.0,3.0/R1.6	702	1929

REGISTERED CIVIL ENGINEER — 12/22/09 DATE

2-1-10 PLANS APPROVAL DATE

REGISTERED PROFESSIONAL ENGINEER — JULIET SU No. C56168 Exp.12/31/10 CIVIL — STATE OF CALIFORNIA

THE STATE OF CALIFORNIA OR ITS OFFICERS OR AGENTS SHALL NOT BE RESPONSIBLE FOR THE ACCURACY OR COMPLETENESS OF ELECTRONIC COPIES OF THIS PLAN SHEET.

MTS
16795 VON KARMAN AVE
SUITE 205
IRVINE, CA 92606

ORANGE COUNTY
TRANSPORTATION AUTHORITY
550 S. MAIN STREET
ORANGE, CA 92863-1584

CONSTRUCTION NOTES THIS SHEET:

2 Const PORTION OF SB Pvmt.
4 Const PORTION OF "SB-1" LINE.
5 Const PORTION OF "SB-2" LINE.
7 Const Temp RAMP, "TSB-1" LINE.
8 Const Temp Pvmt. CONSECUTIVE OVERNIGHT LANE CLOSURES REQUIRED.

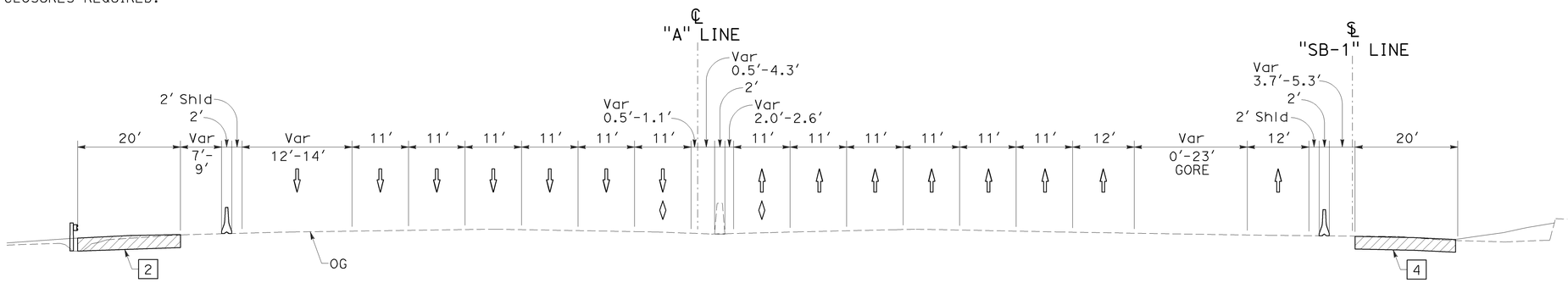

SECTION B-B

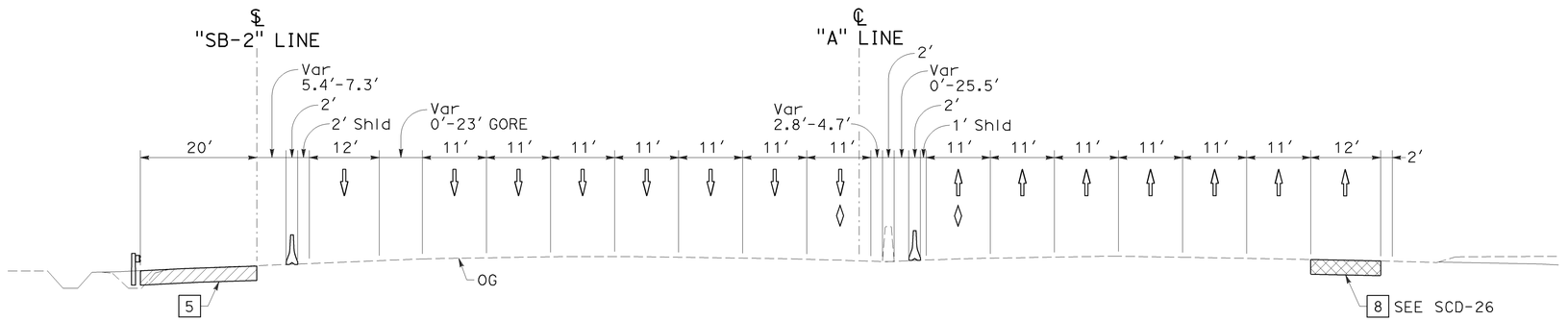

SECTION C-C

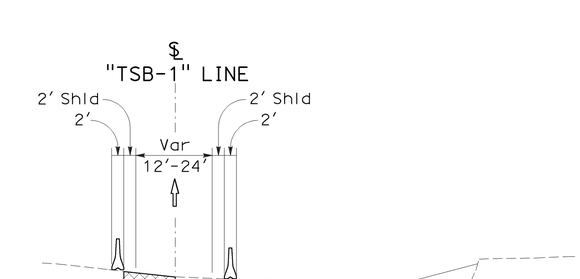

SECTION D-D

THIS PLAN ACCURATE FOR STAGE CONSTRUCTION AND TRAFFIC HANDLING WORK ONLY.

STAGE 2B.1

STAGE CONSTRUCTION AND TRAFFIC HANDLING PLAN

NO SCALE

SC-95

LAST REVISION: DATE PLOTTED => 03-FEB-2010
08-10-09 TIME PLOTTED => 13:16

CALCULATED-DESIGNED BY | CHECKED BY
CONSULTANT FUNCTIONAL SUPERVISOR: LEONARD SEQUEIRA
REVISED BY: KLA | DATE REVISED: 12/22/09
KELSIE ANDERSON | JULIET SU
STATE OF CALIFORNIA - DEPARTMENT OF TRANSPORTATION
Caltrans

BORDER LAST REVISED 8/1/2008 | RELATIVE BORDER SCALE IS IN INCHES 0 1 2 3 | USERNAME => trcarol DGN FILE => c07163ma095.dgn | CU 12235 | EA 071631

Dist	COUNTY	ROUTE	POST MILES TOTAL PROJECT	SHEET No.	TOTAL SHEETS
12	Ora	22,405, 605	R0.3/R0.9, 22.3/24.0,3.0/R1.6	703	1929

REGISTERED CIVIL ENGINEER — 12/22/09 DATE

2-1-10 PLANS APPROVAL DATE

REGISTERED PROFESSIONAL ENGINEER — JULIET SU No. C56168 Exp.12/31/10 CIVIL — STATE OF CALIFORNIA

THE STATE OF CALIFORNIA OR ITS OFFICERS OR AGENTS SHALL NOT BE RESPONSIBLE FOR THE ACCURACY OR COMPLETENESS OF ELECTRONIC COPIES OF THIS PLAN SHEET.

MTS
16795 VON KARMAN AVE
SUITE 205
IRVINE, CA 92606

ORANGE COUNTY TRANSPORTATION AUTHORITY
550 S. MAIN STREET
ORANGE, CA 92863-1584

NOTES:

1. FOR COMPLETE RIGHT OF WAY AND ACCURATE ACCESS DATA, SEE RIGHT OF WAY RECORD MAPS AT DISTRICT OFFICE.
2. SEE SHEET SC-97 FOR SECTIONS E-E, F-F, AND G-G.

CONSTRUCTION NOTES THIS SHEET:

3 Const DRAINAGE SYSTEM. SEE DRAINAGE PLANS
5 Const PORTION OF "SB-2" LINE.
7 Const Temp RAMP, "TSB-1" LINE.
8 Const Temp Pvmt. CONSECUTIVE OVERNIGHT LANE CLOSURES REQUIRED.
9 Const Temp Pvmt.
10 Const REMAINDER OF Temp RAMP, "TSB-4" LINE. CONSECUTIVE OVERNIGHT LANE CLOSURES REQUIRED.
11 Const PORTION OF SEAL BEACH Blvd IMPROVEMENTS.
12 Const PORTION OF Br No. 55-1099. SEE STRUCTURE PLANS.
13 Const WALL. SEE WALL PLANS.
14 PLACE SURCHARGE.
19 RECONSTRUCT MAINLINE ELEMENTS IMPACTED BY Br Const.

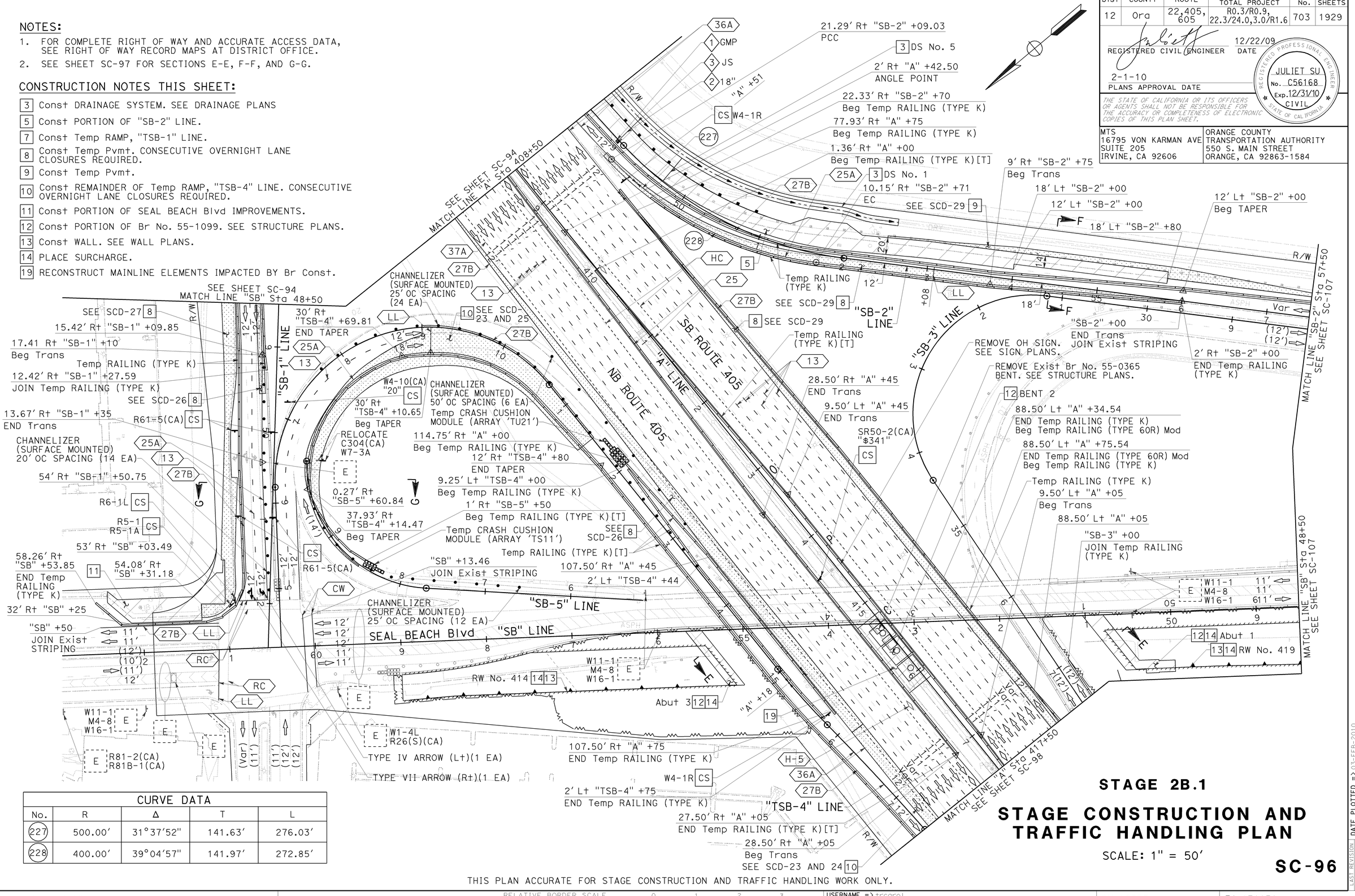

CURVE DATA				
No.	R	Δ	T	L
227	500.00'	31°37'52"	141.63'	276.03'
228	400.00'	39°04'57"	141.97'	272.85'

THIS PLAN ACCURATE FOR STAGE CONSTRUCTION AND TRAFFIC HANDLING WORK ONLY.

STAGE 2B.1

STAGE CONSTRUCTION AND TRAFFIC HANDLING PLAN

SCALE: 1" = 50'

SC-96

STATE OF CALIFORNIA - DEPARTMENT OF TRANSPORTATION
CONSULTANT FUNCTIONAL SUPERVISOR: LEONARD SEQUEIRA
CALCULATED-DESIGNED BY: KELSIE ANDERSON
CHECKED BY: JULIET SU
REVISED BY: KLA
DATE REVISED: 12/22/09

LAST REVISION DATE PLOTTED => 03-FEB-2010
TIME PLOTTED => 13:16
08-10-09

BORDER LAST REVISED 8/1/2008
RELATIVE BORDER SCALE IS IN INCHES 0 1 2 3
USERNAME => trcarol
DGN FILE => c07163ma096.dgn
CU 12235
EA 071631

Dist	COUNTY	ROUTE	POST MILES TOTAL PROJECT	SHEET No.	TOTAL SHEETS
12	Ora	22,405, 605	R0.3/R0.9, 22.3/24.0,3.0/R1.6	704	1929

REGISTERED CIVIL ENGINEER — 12/22/09 DATE

2-1-10
PLANS APPROVAL DATE

REGISTERED PROFESSIONAL ENGINEER
JULIET SU
No. C56168
Exp.12/31/10
CIVIL
STATE OF CALIFORNIA

THE STATE OF CALIFORNIA OR ITS OFFICERS OR AGENTS SHALL NOT BE RESPONSIBLE FOR THE ACCURACY OR COMPLETENESS OF ELECTRONIC COPIES OF THIS PLAN SHEET.

MTS
16795 VON KARMAN AVE
SUITE 205
IRVINE, CA 92606

ORANGE COUNTY
TRANSPORTATION AUTHORITY
550 S. MAIN STREET
ORANGE, CA 92863-1584

CONSTRUCTION NOTES THIS SHEET:

5 Const PORTION OF "SB-2" LINE.
8 Const Temp Pvmt. CONSECUTIVE OVERNIGHT LANE CLOSURES REQUIRED.
9 Const Temp Pvmt.
10 Const REMAINDER OF Temp RAMP, "TSB-4" LINE. CONSECUTIVE OVERNIGHT LANE CLOSURES REQUIRED.
12 Const PORTION OF Br No. 55-1099. SEE STRUCTURE PLANS.
14 PLACE SURCHARGE.

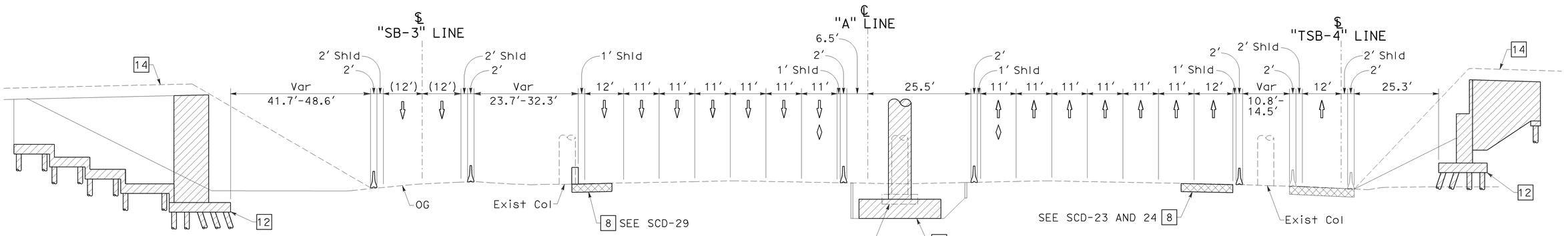

SECTION E-E

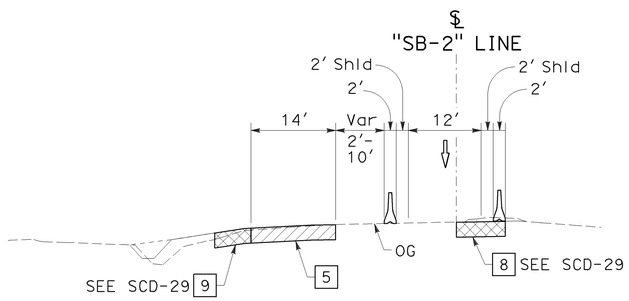

SECTION F-F

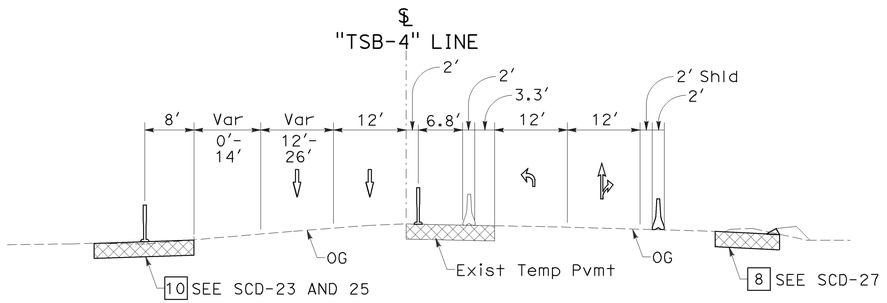

SECTION G-G

THIS PLAN ACCURATE FOR STAGE CONSTRUCTION AND TRAFFIC HANDLING WORK ONLY.

STAGE 2B.1

STAGE CONSTRUCTION AND TRAFFIC HANDLING PLAN

NO SCALE

SC-97

LAST REVISION DATE PLOTTED => 03-FEB-2010
08-10-09 TIME PLOTTED => 13:16

STATE OF CALIFORNIA - DEPARTMENT OF TRANSPORTATION
Caltrans
CONSULTANT FUNCTIONAL SUPERVISOR: LEONARD SEQUEIRA
CALCULATED-DESIGNED BY: KELSIE ANDERSON
CHECKED BY: JULIET SU
REVISED BY: KLA
DATE REVISED: 12/22/09

BORDER LAST REVISED 8/1/2008
RELATIVE BORDER SCALE IS IN INCHES 0 1 2 3
USERNAME => trcarol
DGN FILE => c07163ma097.dgn
CU 12235
EA 071631

Dist	COUNTY	ROUTE	POST MILES TOTAL PROJECT	SHEET No.	TOTAL SHEETS
12	Ora	22,405, 605	R0.3/R0.9, 22.3/24.0,3.0/R1.6	705	1929

REGISTERED CIVIL ENGINEER — 12/22/09 DATE

JULIET SU No. C56168 Exp.12/31/10 CIVIL — REGISTERED PROFESSIONAL ENGINEER — STATE OF CALIFORNIA

2-1-10
PLANS APPROVAL DATE

THE STATE OF CALIFORNIA OR ITS OFFICERS OR AGENTS SHALL NOT BE RESPONSIBLE FOR THE ACCURACY OR COMPLETENESS OF ELECTRONIC COPIES OF THIS PLAN SHEET.

MTS
16795 VON KARMAN AVE
SUITE 205
IRVINE, CA 92606

ORANGE COUNTY
TRANSPORTATION AUTHORITY
550 S. MAIN STREET
ORANGE, CA 92863-1584

NOTE:

1. FOR COMPLETE RIGHT OF WAY AND ACCURATE ACCESS DATA, SEE RIGHT OF WAY RECORD MAPS AT DISTRICT OFFICE.

CONSTRUCTION NOTES THIS SHEET:

8 Const Temp Pvmt. CONSECUTIVE OVERNIGHT LANE CLOSURES REQUIRED.

10 Const REMAINDER OF Temp RAMP, "TSB-4" LINE. CONSECUTIVE OVERNIGHT LANE CLOSURES REQUIRED.

12 Const PORTION OF Br No.55-1099. SEE STRUCTURE PLANS.

13 Const WALL. SEE WALL PLANS.

14 PLACE SURCHARGE.

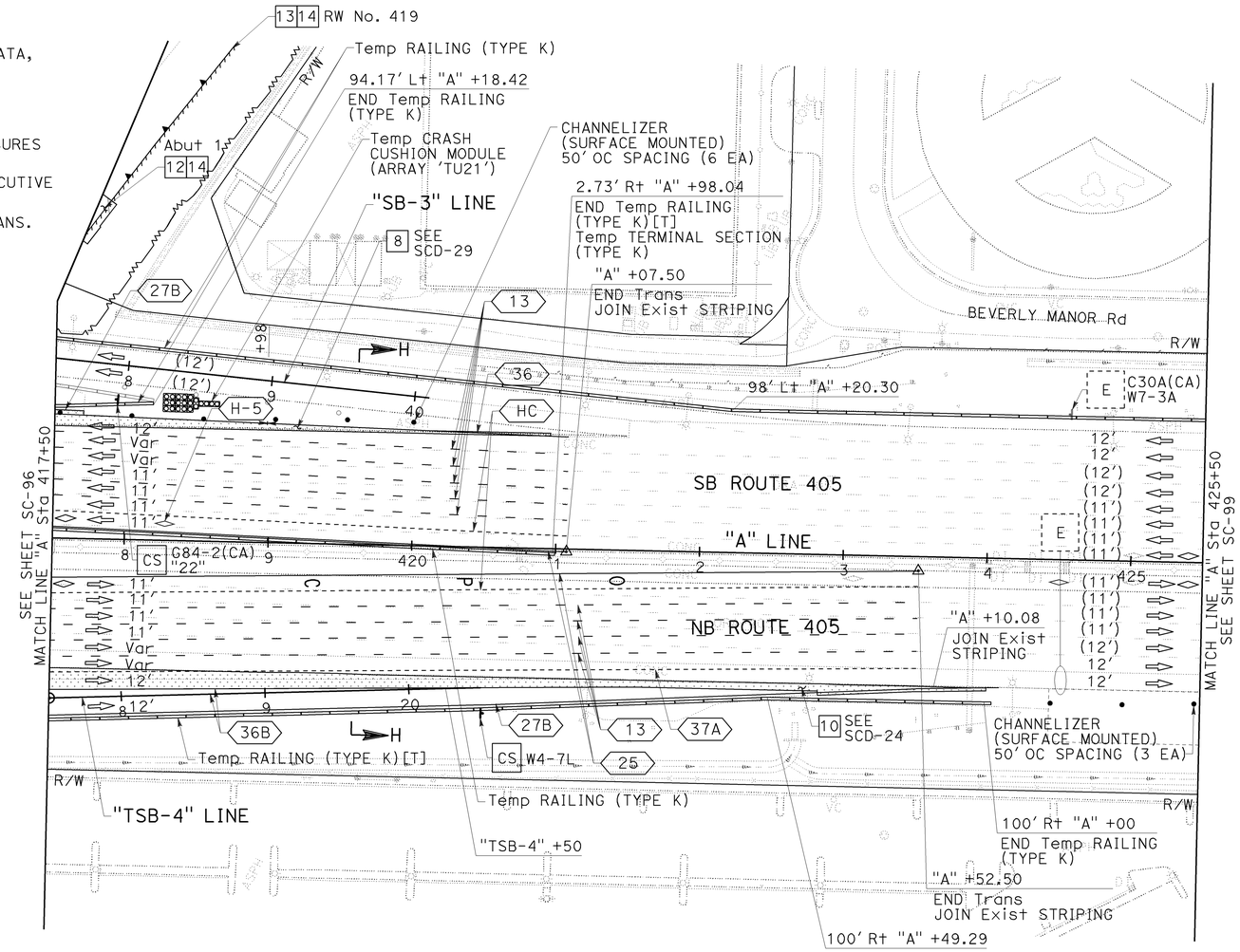

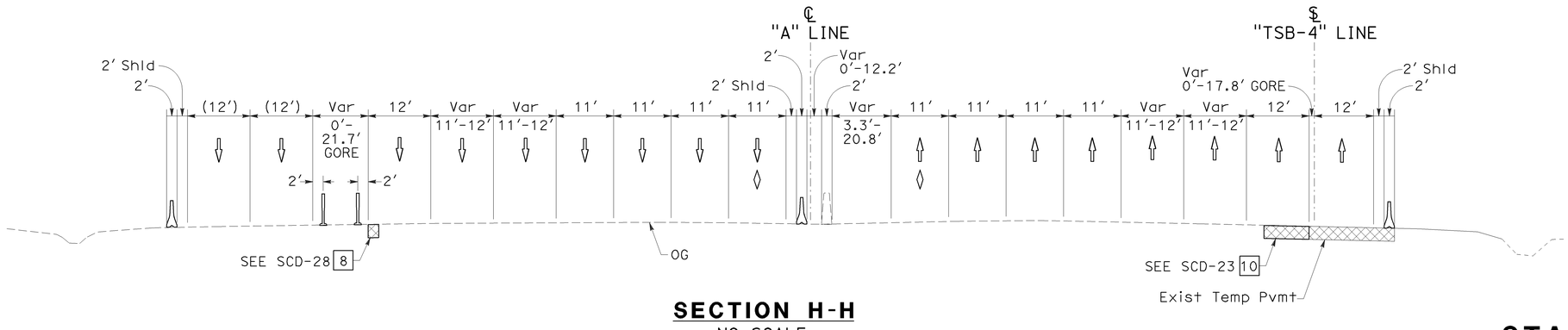

SECTION H-H
NO SCALE

STAGE 2B.1

STAGE CONSTRUCTION AND TRAFFIC HANDLING PLAN

SCALE: 1" = 50'

SC-98

THIS PLAN ACCURATE FOR STAGE CONSTRUCTION AND TRAFFIC HANDLING WORK ONLY.

LAST REVISION DATE PLOTTED => 03-FEB-2010
08-10-09 TIME PLOTTED => 13:16

STATE OF CALIFORNIA - DEPARTMENT OF TRANSPORTATION
CONSULTANT FUNCTIONAL SUPERVISOR: LEONARD SEQUEIRA
CALCULATED-DESIGNED BY: KELSIE ANDERSON
CHECKED BY: JULIET SU
REVISED BY: KLA
DATE REVISED: 12/22/09

BORDER LAST REVISED 8/1/2008 | RELATIVE BORDER SCALE IS IN INCHES 0 1 2 3 | USERNAME => trcarol DGN FILE => c07163ma098.dgn | CU 12235 | EA 071631

Dist	COUNTY	ROUTE	POST MILES TOTAL PROJECT	SHEET No.	TOTAL SHEETS
12	Ora	22,405, 605	R0.3/R0.9, 22.3/24.0,3.0/R1.6	706	1929

REGISTERED CIVIL ENGINEER — 12/22/09 DATE

JULIET SU No. C56168 Exp.12/31/10 CIVIL — REGISTERED PROFESSIONAL ENGINEER — STATE OF CALIFORNIA

2-1-10
PLANS APPROVAL DATE

THE STATE OF CALIFORNIA OR ITS OFFICERS OR AGENTS SHALL NOT BE RESPONSIBLE FOR THE ACCURACY OR COMPLETENESS OF ELECTRONIC COPIES OF THIS PLAN SHEET.

MTS
16795 VON KARMAN AVE
SUITE 205
IRVINE, CA 92606

ORANGE COUNTY
TRANSPORTATION AUTHORITY
550 S. MAIN STREET
ORANGE, CA 92863-1584

NOTE:

1. FOR COMPLETE RIGHT OF WAY AND ACCURATE ACCESS DATA, SEE RIGHT OF WAY RECORD MAPS AT DISTRICT OFFICE.

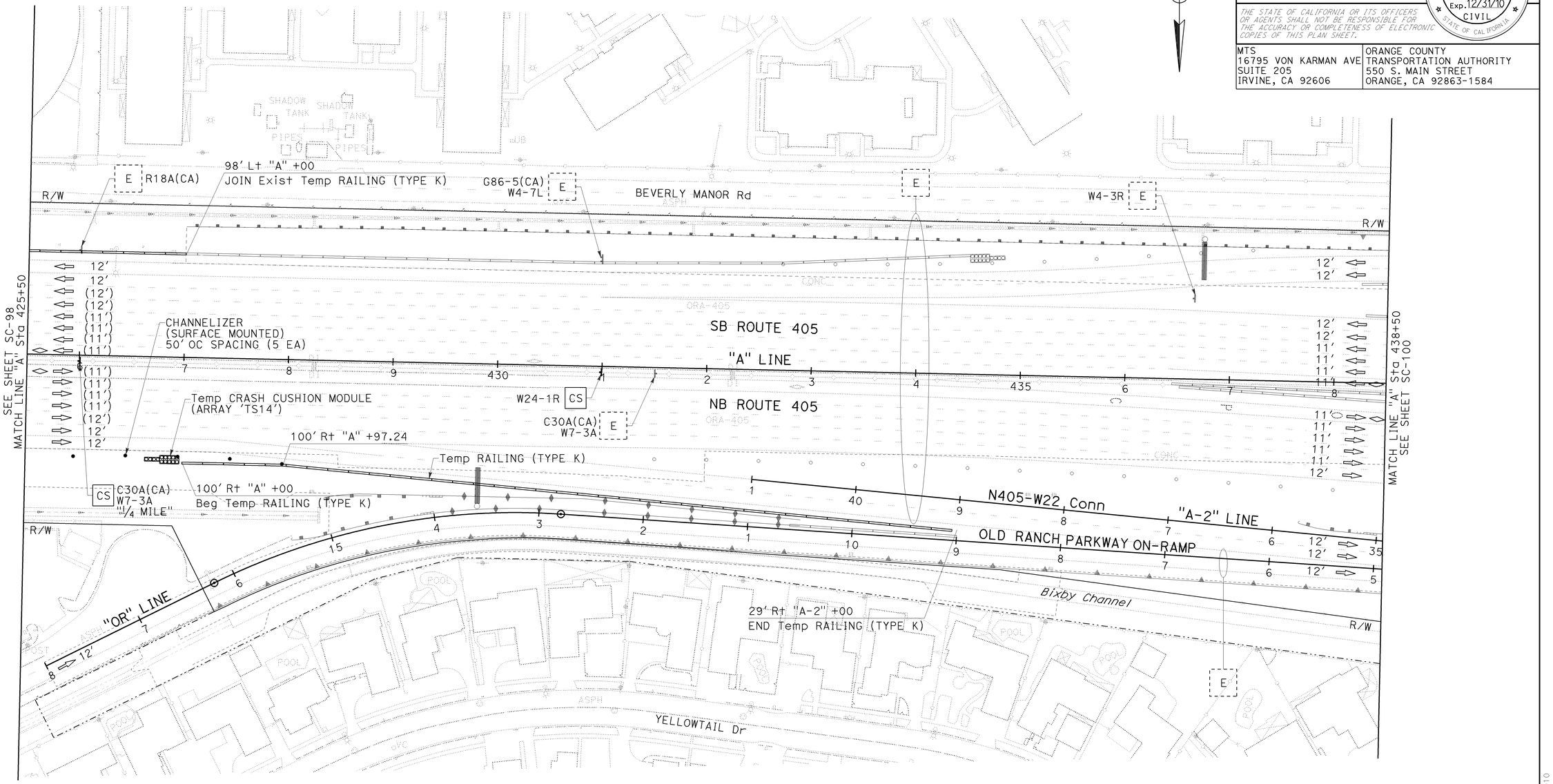

STAGE 2B.1

STAGE CONSTRUCTION AND TRAFFIC HANDLING PLAN

SCALE: 1" = 50'

SC-99

THIS PLAN ACCURATE FOR STAGE CONSTRUCTION AND TRAFFIC HANDLING WORK ONLY.

LAST REVISION DATE PLOTTED => 03-FEB-2010
TIME PLOTTED => 08-10-09 13:16

STATE OF CALIFORNIA - DEPARTMENT OF TRANSPORTATION
Caltrans

CONSULTANT FUNCTIONAL SUPERVISOR: LEONARD SEQUEIRA
CALCULATED-DESIGNED BY: KELSIE ANDERSON
CHECKED BY: JULIET SU
REVISED BY: KLA
DATE REVISED: 12/22/09

BORDER LAST REVISED 8/1/2008

RELATIVE BORDER SCALE IS IN INCHES 0 1 2 3

USERNAME => trcarol
DGN FILE => c07163ma099.dgn

CU 12235

EA 071631

Dist	COUNTY	ROUTE	POST MILES TOTAL PROJECT	SHEET No.	TOTAL SHEETS
12	Ora	22,405, 605	R0.3/R0.9, 22.3/24.0,3.0/R1.6	707	1929

REGISTERED CIVIL ENGINEER — 12/22/09 DATE

2-1-10 PLANS APPROVAL DATE

REGISTERED PROFESSIONAL ENGINEER — JULIET SU No. C56168 Exp.12/31/10 CIVIL — STATE OF CALIFORNIA

THE STATE OF CALIFORNIA OR ITS OFFICERS OR AGENTS SHALL NOT BE RESPONSIBLE FOR THE ACCURACY OR COMPLETENESS OF ELECTRONIC COPIES OF THIS PLAN SHEET.

MTS
16795 VON KARMAN AVE
SUITE 205
IRVINE, CA 92606

ORANGE COUNTY
TRANSPORTATION AUTHORITY
550 S. MAIN STREET
ORANGE, CA 92863-1584

NOTE:
1. FOR COMPLETE RIGHT OF WAY AND ACCURATE ACCESS DATA, SEE RIGHT OF WAY RECORD MAPS AT DISTRICT OFFICE.

CONSTRUCTION NOTES THIS SHEET:
- [2] Const PORTION OF SB Pvmt.
- [3] Const DRAINAGE SYSTEM. SEE DRAINAGE PLANS.
- [18] Const PERMANENT BMP. SEE DRAINAGE PLANS.

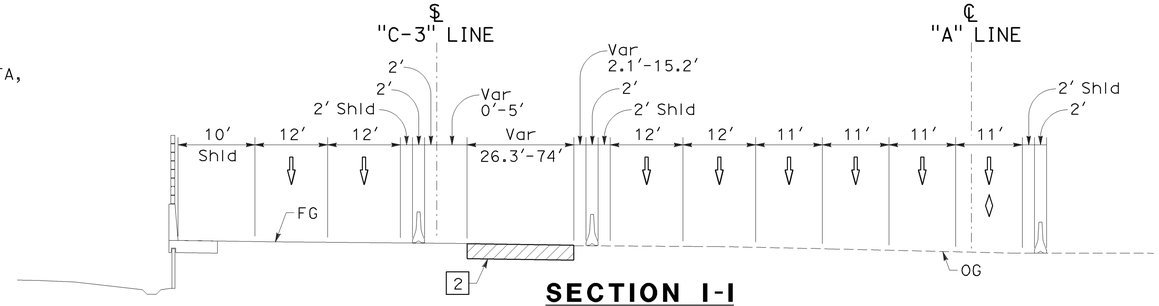

SECTION I-I
NO SCALE

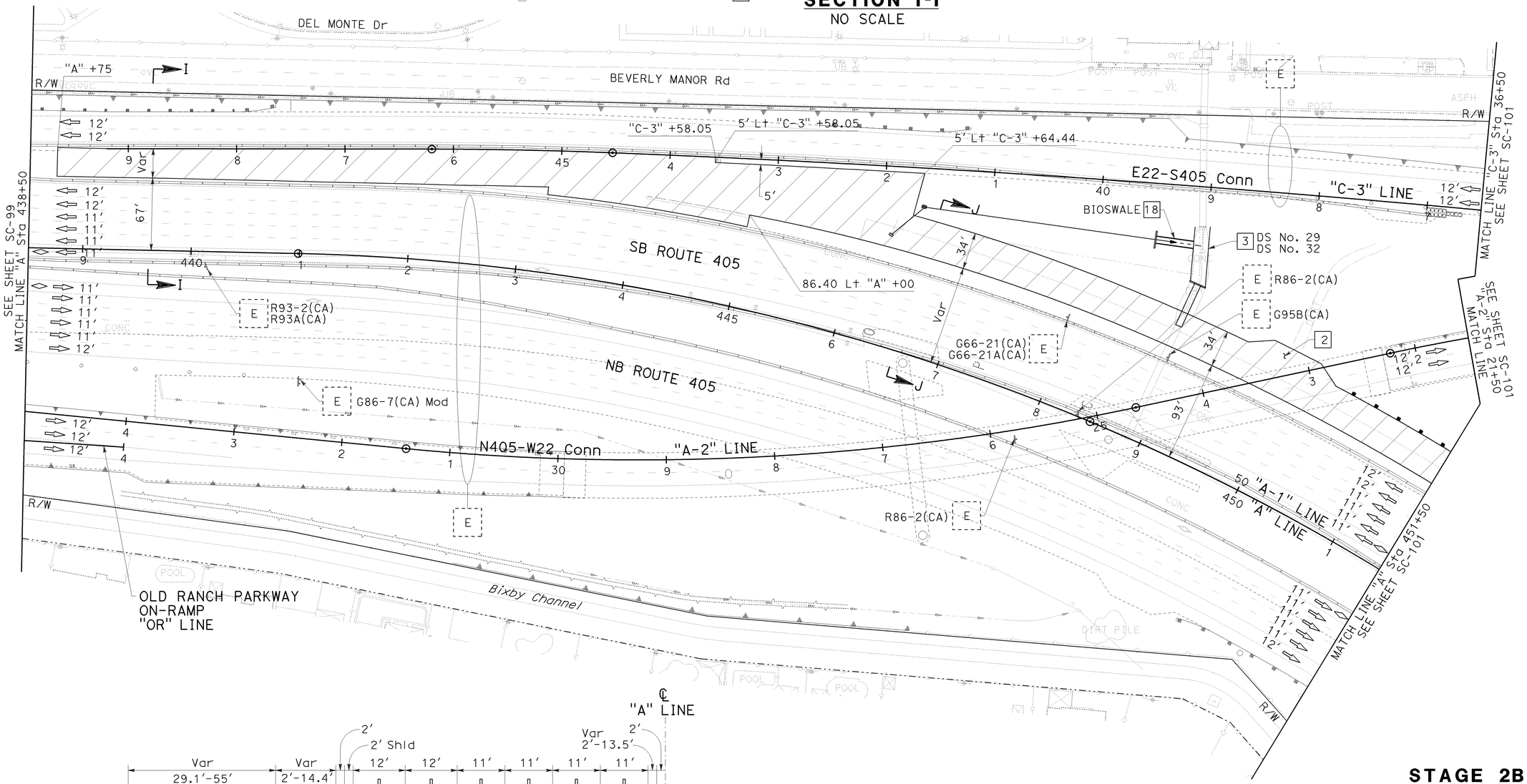

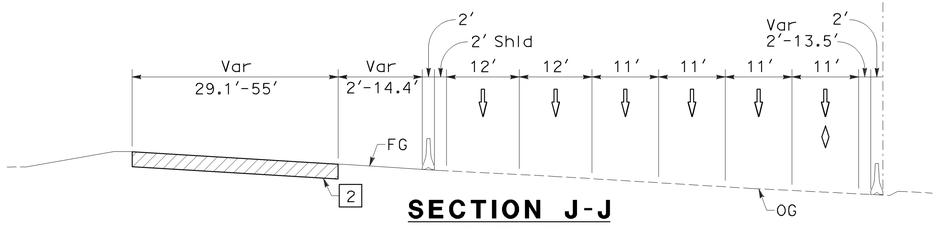

SECTION J-J
NO SCALE

THIS PLAN ACCURATE FOR STAGE CONSTRUCTION AND TRAFFIC HANDLING WORK ONLY.

STAGE 2B.1

STAGE CONSTRUCTION AND TRAFFIC HANDLING PLAN

SCALE: 1" = 50'

SC-100

REVISED BY	DATE REVISED
KLA	12/22/09

CALCULATED-DESIGNED BY: KELSIE ANDERSON
CHECKED BY: JULIET SU
CONSULTANT FUNCTIONAL SUPERVISOR: LEONARD SEQUEIRA
STATE OF CALIFORNIA - DEPARTMENT OF TRANSPORTATION
Caltrans

LAST REVISION DATE PLOTTED => 03-FEB-2010
TIME PLOTTED => 13:16
08-10-09

Dist	COUNTY	ROUTE	POST MILES TOTAL PROJECT	SHEET No.	TOTAL SHEETS
12	Ora	22,405, 605	R0.3/R0.9, 22.3/24.0,3.0/R1.6	708	1929

REGISTERED CIVIL ENGINEER — 12/22/09 DATE

2-1-10
PLANS APPROVAL DATE

REGISTERED PROFESSIONAL ENGINEER
JULIET SU
No. C56168
Exp.12/31/10
CIVIL
STATE OF CALIFORNIA

THE STATE OF CALIFORNIA OR ITS OFFICERS OR AGENTS SHALL NOT BE RESPONSIBLE FOR THE ACCURACY OR COMPLETENESS OF ELECTRONIC COPIES OF THIS PLAN SHEET.

MTS
16795 VON KARMAN AVE
SUITE 205
IRVINE, CA 92606

ORANGE COUNTY
TRANSPORTATION AUTHORITY
550 S. MAIN STREET
ORANGE, CA 92863-1584

NOTE:

1. FOR COMPLETE RIGHT OF WAY AND ACCURATE ACCESS DATA, SEE RIGHT OF WAY RECORD MAPS AT DISTRICT OFFICE.

CONSTRUCTION NOTES THIS SHEET:

2 Const PORTION OF SB Pvmt.

6 Const OH SIGN. SEE SIGN PLANS.

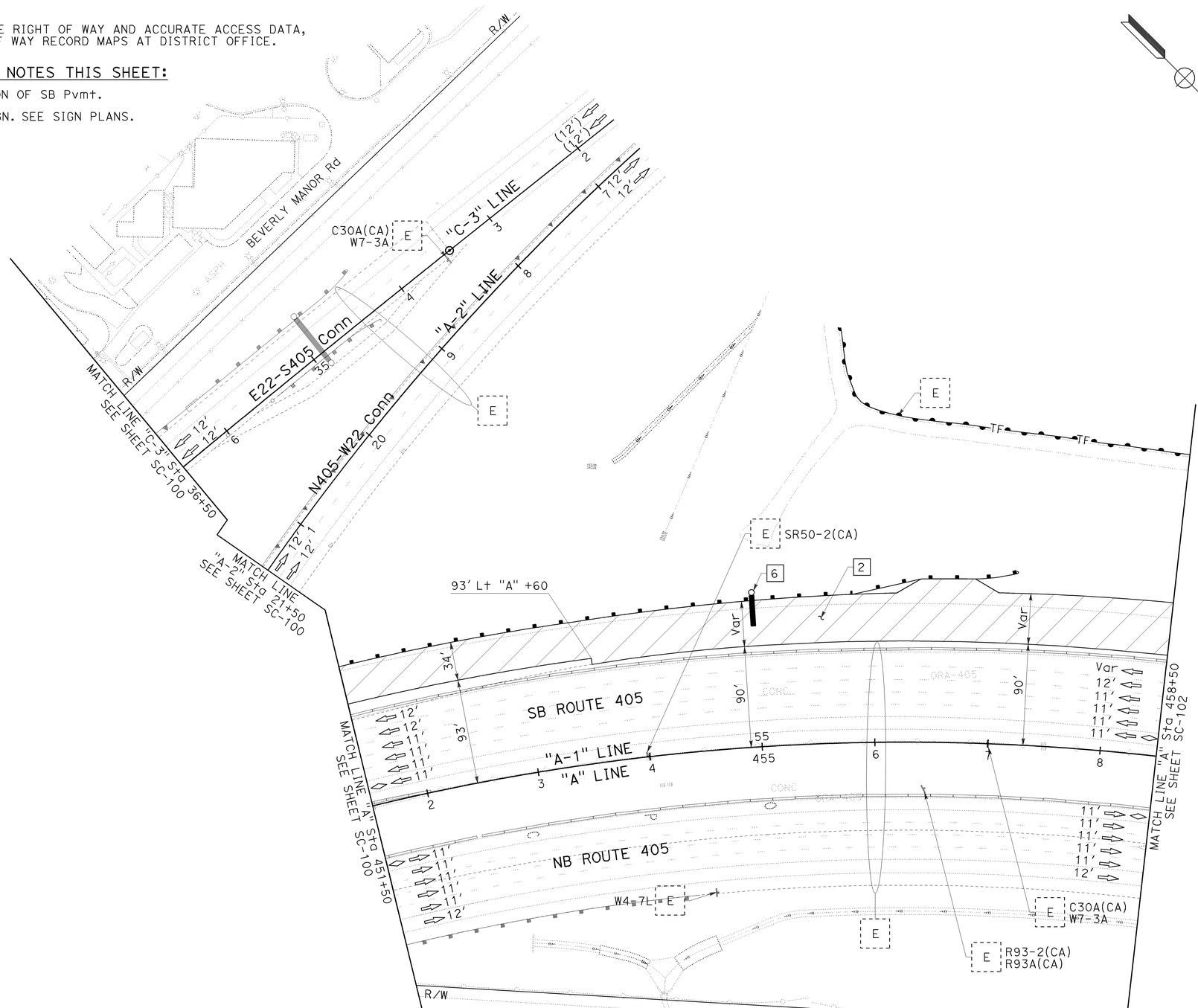

STAGE 2B.1

STAGE CONSTRUCTION AND TRAFFIC HANDLING PLAN

SCALE: 1" = 50'

SC-101

THIS PLAN ACCURATE FOR STAGE CONSTRUCTION AND TRAFFIC HANDLING WORK ONLY.

CALCULATED-DESIGNED BY			
CHECKED BY	JULIET SU	12/22/09	
REVISED BY	KLA		
DATE REVISED			
KELSIE ANDERSON			
CONSULTANT FUNCTIONAL SUPERVISOR	LEONARD SEQUEIRA		
STATE OF CALIFORNIA - DEPARTMENT OF TRANSPORTATION	Caltrans		

LAST REVISION | DATE PLOTTED => 03-FEB-2010
08-10-09 | TIME PLOTTED => 13:16

BORDER LAST REVISED 8/1/2008 | RELATIVE BORDER SCALE IS IN INCHES 0 1 2 3 | USERNAME => trcarol DGN FILE => c07163ma101.dgn | CU 12235 | EA 071631

Dist	COUNTY	ROUTE	POST MILES TOTAL PROJECT	SHEET No.	TOTAL SHEETS
12	Ora	22,405, 605	R0.3/R0.9, 22.3/24.0,3.0/R1.6	709	1929

REGISTERED CIVIL ENGINEER — 12/22/09 DATE

2-1-10 PLANS APPROVAL DATE

REGISTERED PROFESSIONAL ENGINEER — JULIET SU No. C56168 Exp.12/31/10 CIVIL — STATE OF CALIFORNIA

THE STATE OF CALIFORNIA OR ITS OFFICERS OR AGENTS SHALL NOT BE RESPONSIBLE FOR THE ACCURACY OR COMPLETENESS OF ELECTRONIC COPIES OF THIS PLAN SHEET.

MTS
16795 VON KARMAN AVE
SUITE 205
IRVINE, CA 92606

ORANGE COUNTY
TRANSPORTATION AUTHORITY
550 S. MAIN STREET
ORANGE, CA 92863-1584

NOTE:

1. FOR COMPLETE RIGHT OF WAY AND ACCURATE ACCESS DATA, SEE RIGHT OF WAY RECORD MAPS AT DISTRICT OFFICE.

CONSTRUCTION NOTES THIS SHEET:

2 Const PORTION OF SB Pvmt.

15 Const PORTION OF "B-2" LINE.

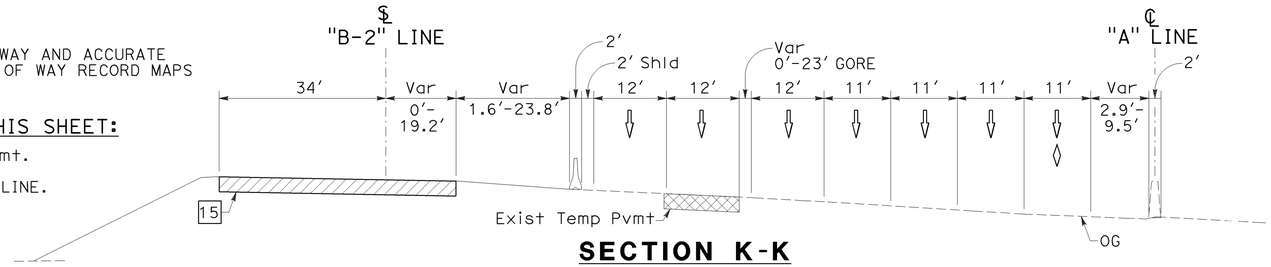

SECTION K-K
NO SCALE

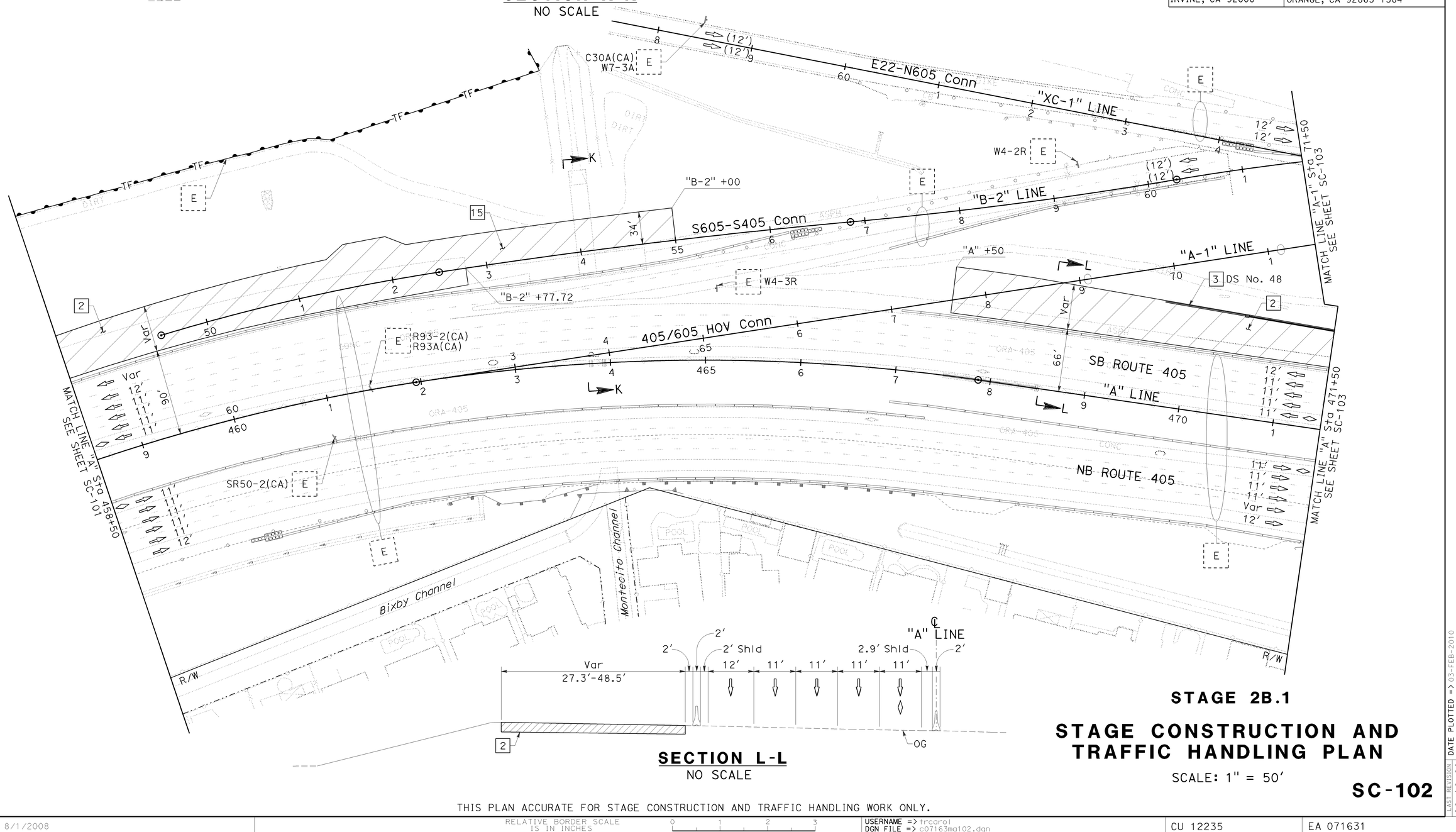

SECTION L-L
NO SCALE

THIS PLAN ACCURATE FOR STAGE CONSTRUCTION AND TRAFFIC HANDLING WORK ONLY.

STAGE 2B.1

STAGE CONSTRUCTION AND TRAFFIC HANDLING PLAN

SCALE: 1" = 50'

SC-102

LAST REVISION: DATE PLOTTED => 03-FEB-2010
08-10-09 TIME PLOTTED => 13:17

STATE OF CALIFORNIA - DEPARTMENT OF TRANSPORTATION
Caltrans

CONSULTANT FUNCTIONAL SUPERVISOR: LEONARD SEQUEIRA

CALCULATED-DESIGNED BY: KELSIE ANDERSON
CHECKED BY: JULIET SU

REVISED BY: KLA
DATE REVISED: 12/22/09

BORDER LAST REVISED 8/1/2008

RELATIVE BORDER SCALE IS IN INCHES 0 1 2 3

USERNAME => trcarol
DGN FILE => c07163ma102.dgn

CU 12235

EA 071631

Dist	COUNTY	ROUTE	POST MILES TOTAL PROJECT	SHEET No.	TOTAL SHEETS
12	Ora	22,405, 605	R0.3/R0.9, 22.3/24.0,3.0/R1.6	710	1929

REGISTERED CIVIL ENGINEER — 12/22/09 DATE

2-1-10
PLANS APPROVAL DATE

JULIET SU
No. C56168
Exp.12/31/10
CIVIL
REGISTERED PROFESSIONAL ENGINEER
STATE OF CALIFORNIA

THE STATE OF CALIFORNIA OR ITS OFFICERS OR AGENTS SHALL NOT BE RESPONSIBLE FOR THE ACCURACY OR COMPLETENESS OF ELECTRONIC COPIES OF THIS PLAN SHEET.

MTS
16795 VON KARMAN AVE
SUITE 205
IRVINE, CA 92606

ORANGE COUNTY
TRANSPORTATION AUTHORITY
550 S. MAIN STREET
ORANGE, CA 92863-1584

NOTE:

1. FOR COMPLETE RIGHT OF WAY AND ACCURATE ACCESS DATA, SEE RIGHT OF WAY RECORD MAPS AT DISTRICT OFFICE.

CONSTRUCTION NOTES THIS SHEET:

2 Const PORTION OF SB Pvmt.

14 PLACE SURCHARGE.

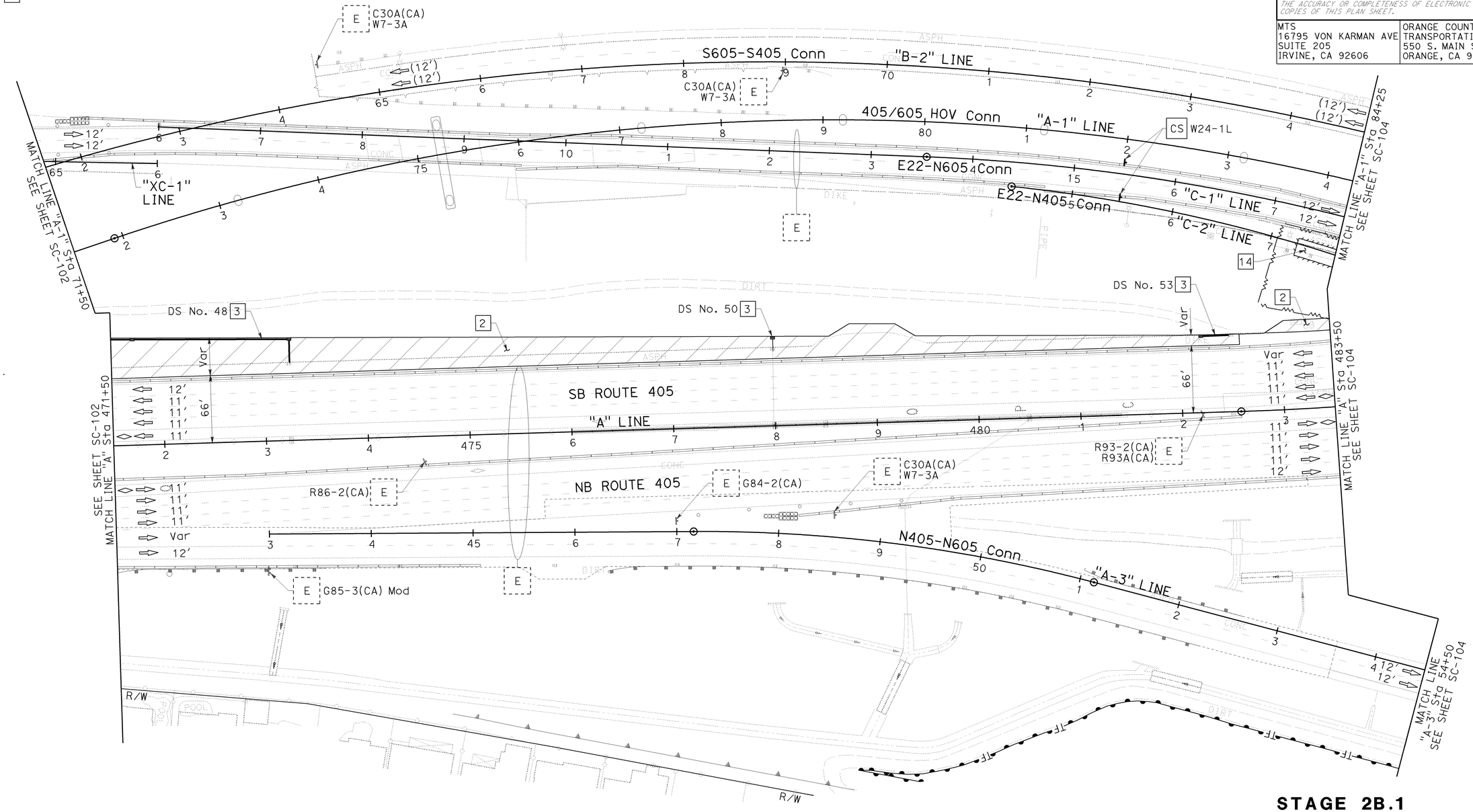

STAGE 2B.1

STAGE CONSTRUCTION AND TRAFFIC HANDLING PLAN

SCALE: 1" = 50'

SC-103

THIS PLAN ACCURATE FOR STAGE CONSTRUCTION AND TRAFFIC HANDLING WORK ONLY.

STATE OF CALIFORNIA - DEPARTMENT OF TRANSPORTATION	CALCULATED-DESIGNED BY	KELSIE ANDERSON	KLA
Caltrans	CHECKED BY	JULIET SU	12/22/09
CONSULTANT FUNCTIONAL SUPERVISOR	LEONARD SEQUEIRA	REVISED BY	DATE REVISED

LAST REVISION DATE PLOTTED => 03-FEB-2010
TIME PLOTTED => 13:17
08-10-09

BORDER LAST REVISED 8/1/2008 | RELATIVE BORDER SCALE IS IN INCHES 0 1 2 3 | USERNAME => trcarol DGN FILE => c07163ma103.dgn | CU 12235 | EA 071631

Dist	COUNTY	ROUTE	POST MILES TOTAL PROJECT	SHEET No.	TOTAL SHEETS
12	Ora	22,405, 605	R0.3/R0.9, 22.3/24.0,3.0/R1.6	711	1929

REGISTERED CIVIL ENGINEER — 12/22/09 DATE

JULIET SU No. C56168 Exp.12/31/10 CIVIL — REGISTERED PROFESSIONAL ENGINEER — STATE OF CALIFORNIA

2-1-10
PLANS APPROVAL DATE

THE STATE OF CALIFORNIA OR ITS OFFICERS OR AGENTS SHALL NOT BE RESPONSIBLE FOR THE ACCURACY OR COMPLETENESS OF ELECTRONIC COPIES OF THIS PLAN SHEET.

MTS
16795 VON KARMAN AVE
SUITE 205
IRVINE, CA 92606

ORANGE COUNTY
TRANSPORTATION AUTHORITY
550 S. MAIN STREET
ORANGE, CA 92863-1584

NOTES:

1. FOR COMPLETE RIGHT OF WAY AND ACCURATE ACCESS DATA, SEE RIGHT OF WAY RECORD MAPS AT DISTRICT OFFICE.
2. SEE SHEET SC-105 FOR SECTIONS M-M AND N-N.

CURVE DATA				
No.	R	Δ	T	L
500	2,500.00′	31°31′05"	705.50′	1,375.23′

CONSTRUCTION NOTES THIS SHEET:

2 Const PORTION OF SB Pvmt.
8 Const Temp Pvmt. CONSECUTIVE OVERNIGHT LANE CLOSURES REQUIRED.
13 Const WALL. SEE WALL PLANS.
14 PLACE SURCHARGE.
16 LENGTHEN Br No. 55-0415. SEE STRUCTURE PLANS.
17 Const PORTION OF Br No. 55-1096G. SEE STRUCTURE PLANS.

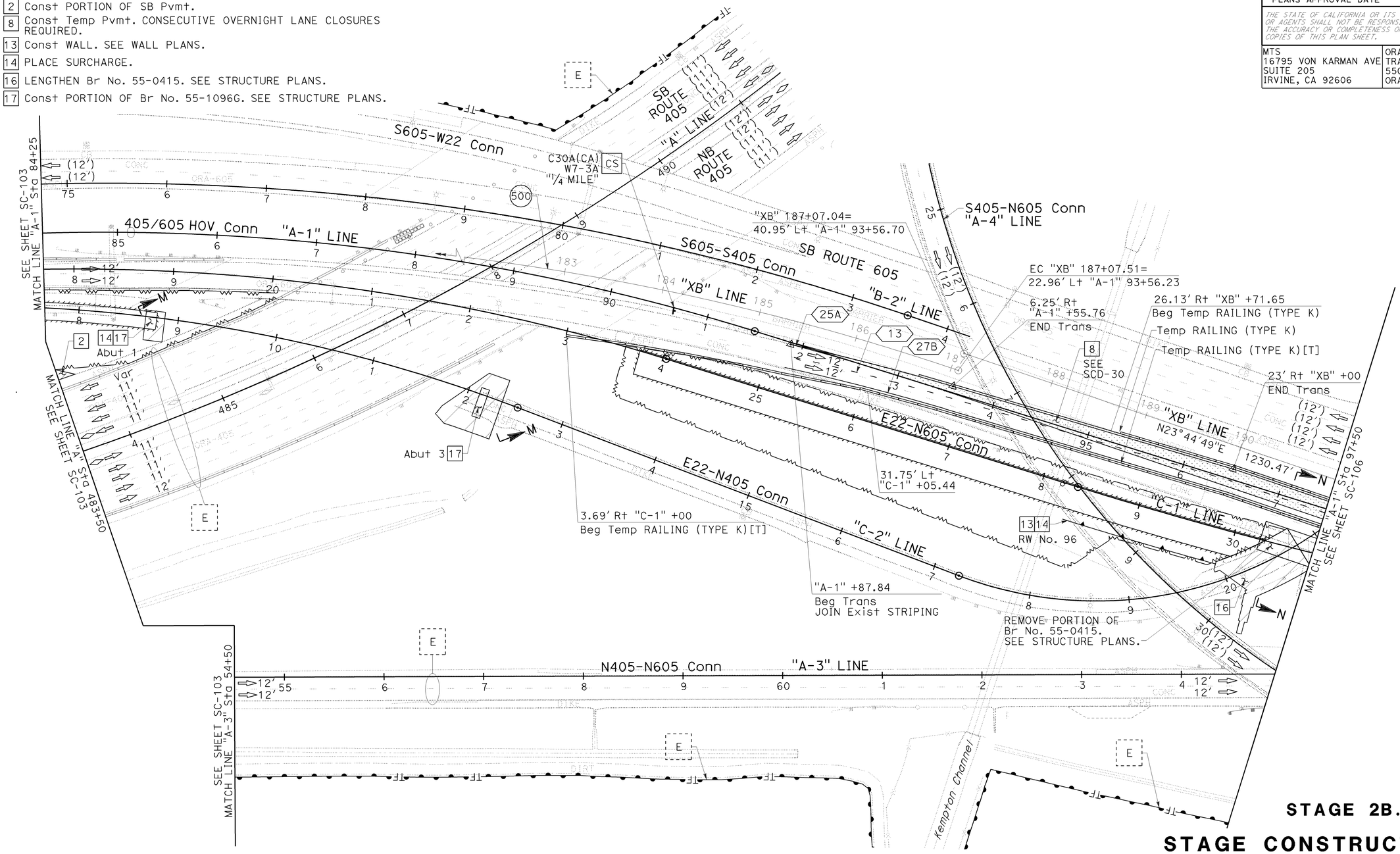

STAGE 2B.1

STAGE CONSTRUCTION AND TRAFFIC HANDLING PLAN

SCALE: 1" = 50′

SC-104

THIS PLAN ACCURATE FOR STAGE CONSTRUCTION AND TRAFFIC HANDLING WORK ONLY.

STATE OF CALIFORNIA - DEPARTMENT OF TRANSPORTATION
Caltrans
CONSULTANT FUNCTIONAL SUPERVISOR: LEONARD SEQUEIRA
CALCULATED-DESIGNED BY: KELSIE ANDERSON
CHECKED BY: JULIET SU
REVISED BY: KLA
DATE REVISED: 12/22/09

LAST REVISION DATE PLOTTED => 03-FEB-2010
TIME PLOTTED => 13:17
08-10-09

BORDER LAST REVISED 8/1/2008
RELATIVE BORDER SCALE IS IN INCHES 0 1 2 3
USERNAME => trcarol
DGN FILE => c07163ma104.dgn
CU 12235
EA 071631

Dist	COUNTY	ROUTE	POST MILES TOTAL PROJECT	SHEET No.	TOTAL SHEETS
12	Ora	22,405, 605	R0.3/R0.9, 22.3/24.0,3.0/R1.6	712	1929

REGISTERED CIVIL ENGINEER — 12/22/09 DATE

2-1-10
PLANS APPROVAL DATE

REGISTERED PROFESSIONAL ENGINEER
JULIET SU
No. C56168
Exp.12/31/10
CIVIL
STATE OF CALIFORNIA

THE STATE OF CALIFORNIA OR ITS OFFICERS OR AGENTS SHALL NOT BE RESPONSIBLE FOR THE ACCURACY OR COMPLETENESS OF ELECTRONIC COPIES OF THIS PLAN SHEET.

MTS
16795 VON KARMAN AVE
SUITE 205
IRVINE, CA 92606

ORANGE COUNTY
TRANSPORTATION AUTHORITY
550 S. MAIN STREET
ORANGE, CA 92863-1584

CONSTRUCTION NOTES THIS SHEET:

8 CONSTRUCT Temp Pvmt. CONSECUTIVE OVERNIGHT LANE CLOSURES REQUIRED.

14 PLACE SURCHARGE.

16 LENGTHEN Br No. 55-0415. SEE STRUCTURE PLANS.

17 Const PORTION OF Br No. 55-1096G. SEE STRUCTURE PLANS.

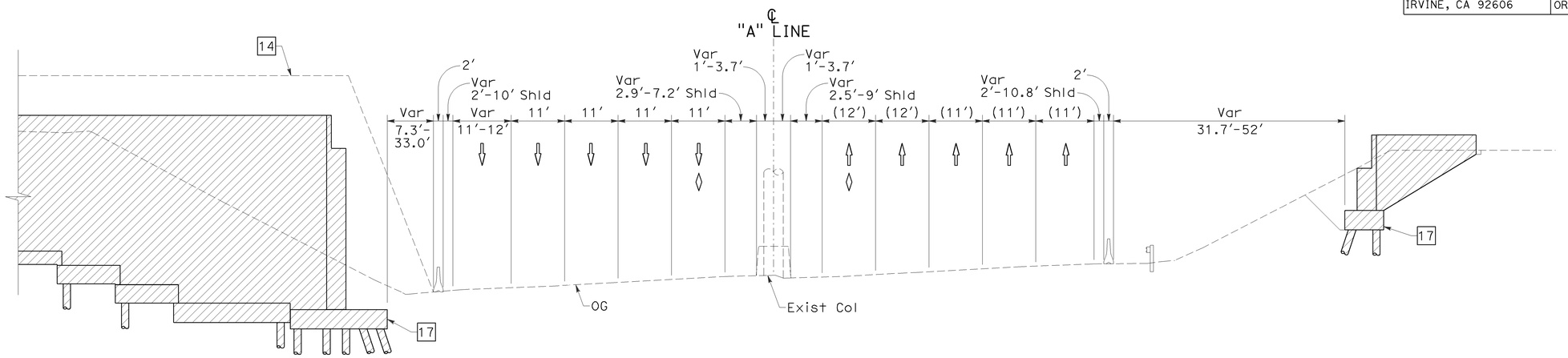

SECTION M-M

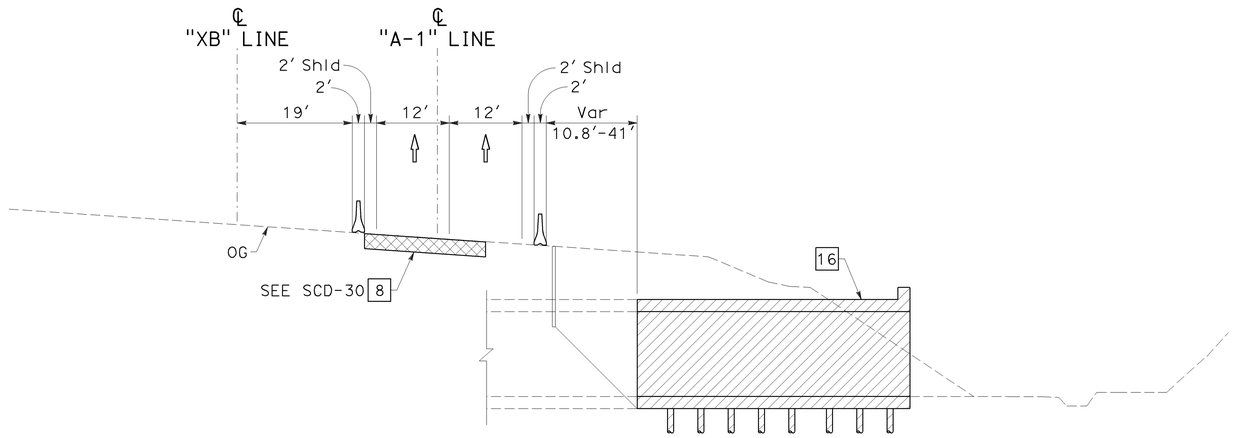

SECTION N-N

THIS PLAN ACCURATE FOR STAGE CONSTRUCTION AND TRAFFIC HANDLING WORK ONLY.

STAGE 2B.1

STAGE CONSTRUCTION AND TRAFFIC HANDLING PLAN

NO SCALE

SC-105

LAST REVISION DATE PLOTTED => 03-FEB-2010
08-10-09 TIME PLOTTED => 13:17

STATE OF CALIFORNIA - DEPARTMENT OF TRANSPORTATION
Caltrans

CONSULTANT FUNCTIONAL SUPERVISOR: LEONARD SEQUEIRA

CALCULATED-DESIGNED BY: KELSIE ANDERSON
CHECKED BY: JULIET SU

REVISED BY: KLA
DATE REVISED: 12/22/09

BORDER LAST REVISED 8/1/2008

RELATIVE BORDER SCALE IS IN INCHES 0 1 2 3

USERNAME => trcarol
DGN FILE => c07163ma105.dgn

CU 12235

EA 071631

Dist	COUNTY	ROUTE	POST MILES TOTAL PROJECT	SHEET No.	TOTAL SHEETS
12	Ora	22,405, 605	R0.3/R0.9, 22.3/24.0,3.0/R1.6	713	1929

REGISTERED CIVIL ENGINEER — 12/22/09 DATE

2-1-10 PLANS APPROVAL DATE

REGISTERED PROFESSIONAL ENGINEER — JULIET SU No. C56168 Exp.12/31/10 CIVIL — STATE OF CALIFORNIA

THE STATE OF CALIFORNIA OR ITS OFFICERS OR AGENTS SHALL NOT BE RESPONSIBLE FOR THE ACCURACY OR COMPLETENESS OF ELECTRONIC COPIES OF THIS PLAN SHEET.

MTS 16795 VON KARMAN AVE SUITE 205 IRVINE, CA 92606	ORANGE COUNTY TRANSPORTATION AUTHORITY 550 S. MAIN STREET ORANGE, CA 92863-1584

NOTE:

1. FOR COMPLETE RIGHT OF WAY AND ACCURATE ACCESS DATA, SEE RIGHT OF WAY RECORD MAPS AT DISTRICT OFFICE.

CONSTRUCTION NOTE THIS SHEET:

8 Const Temp Pvmt. CONSECUTIVE OVERNIGHT LANE CLOSURES REQUIRED.

CURVE DATA				
No.	R	Δ	T	L
501	9,500.00′	06°09′00"	510.34′	1,019.71′

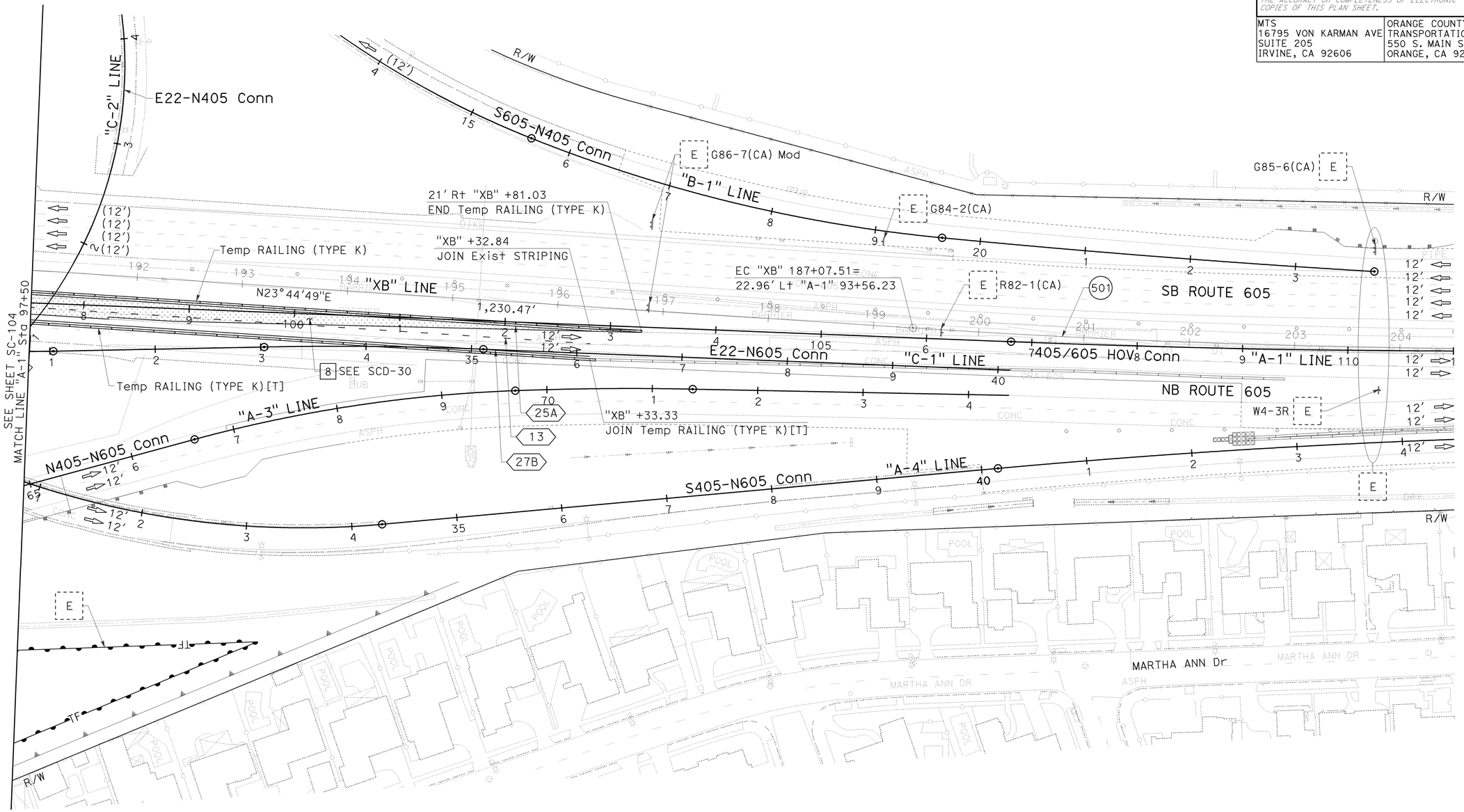

STAGE 2B.1

STAGE CONSTRUCTION AND TRAFFIC HANDLING PLAN

SCALE: 1" = 50′

SC-106

THIS PLAN ACCURATE FOR STAGE CONSTRUCTION AND TRAFFIC HANDLING WORK ONLY.

REVISED BY	DATE REVISED
KLA	12/22/09

CALCULATED-DESIGNED BY: KELSIE ANDERSON
CHECKED BY: JULIET SU
CONSULTANT FUNCTIONAL SUPERVISOR: LEONARD SEQUEIRA
STATE OF CALIFORNIA - DEPARTMENT OF TRANSPORTATION — Caltrans

LAST REVISION DATE PLOTTED => 03-FEB-2010
TIME PLOTTED => 13:17
08-10-09

BORDER LAST REVISED 8/1/2008 | RELATIVE BORDER SCALE IS IN INCHES 0 1 2 3 | USERNAME => trearol | DGN FILE => c07163ma106.dgn | CU 12235 | EA 071631

Dist	COUNTY	ROUTE	POST MILES TOTAL PROJECT	SHEET No.	TOTAL SHEETS
12	Ora	22,405, 605	R0.3/R0.9, 22.3/24.0,3.0/R1.6	714	1929

REGISTERED CIVIL ENGINEER — 12/22/09 DATE

2-1-10
PLANS APPROVAL DATE

REGISTERED PROFESSIONAL ENGINEER — JULIET SU No. C56168 Exp.12/31/10 CIVIL — STATE OF CALIFORNIA

THE STATE OF CALIFORNIA OR ITS OFFICERS OR AGENTS SHALL NOT BE RESPONSIBLE FOR THE ACCURACY OR COMPLETENESS OF ELECTRONIC COPIES OF THIS PLAN SHEET.

MTS
16795 VON KARMAN AVE
SUITE 205
IRVINE, CA 92606

ORANGE COUNTY
TRANSPORTATION AUTHORITY
550 S. MAIN STREET
ORANGE, CA 92863-1584

NOTE:

1. FOR COMPLETE RIGHT OF WAY AND ACCURATE ACCESS DATA, SEE RIGHT OF WAY RECORD MAPS AT DISTRICT OFFICE.

CONSTRUCTION NOTES THIS SHEET:

3 Const DRAINAGE SYSTEM. SEE DRAINAGE PLANS.
9 Const Temp Pvmt.
13 Const WALL. SEE WALL PLANS.
14 PLACE SURCHARGE.

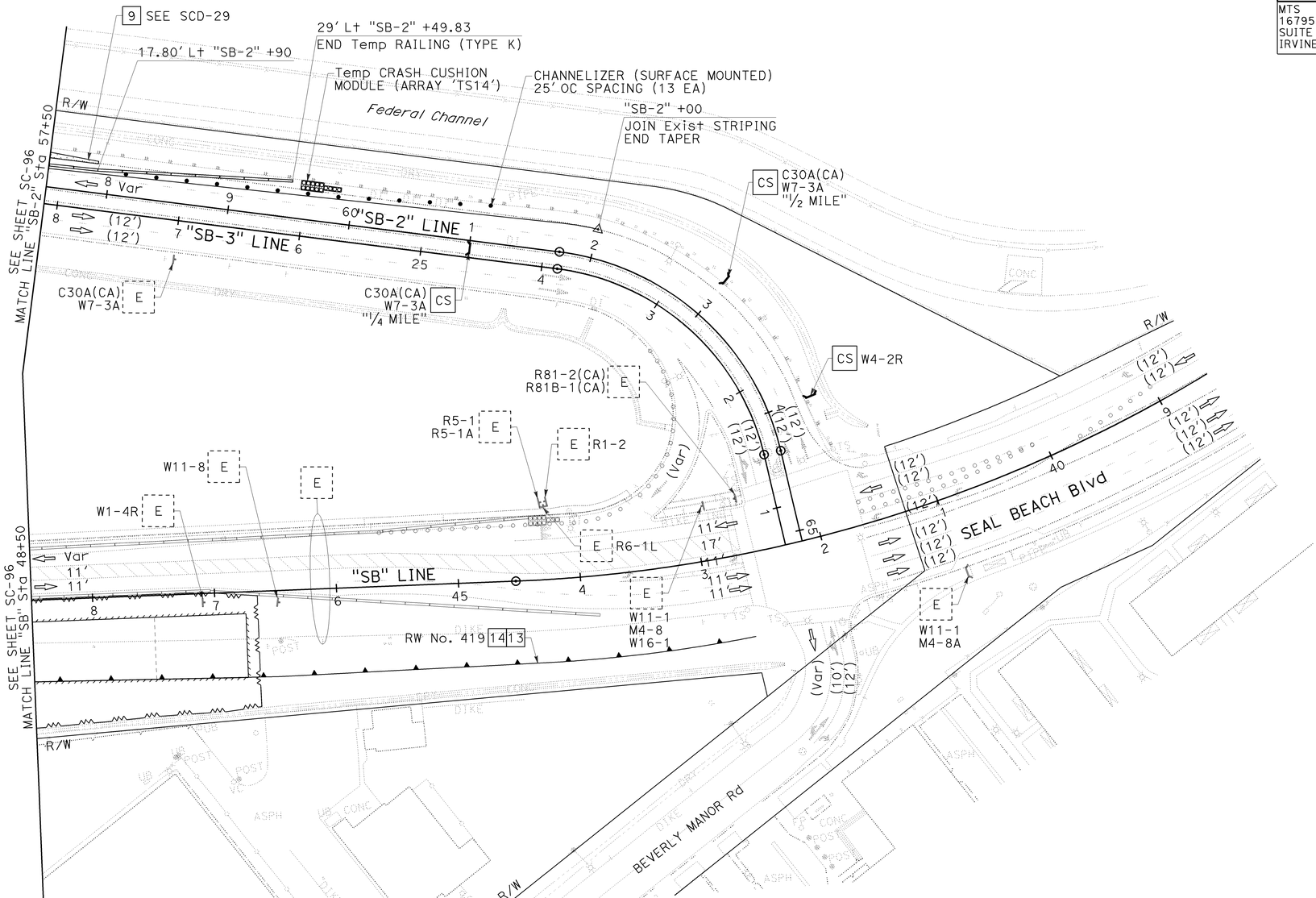

STAGE 2B.1

STAGE CONSTRUCTION AND TRAFFIC HANDLING PLAN

SCALE: 1" = 50'

SC-107

THIS PLAN ACCURATE FOR STAGE CONSTRUCTION AND TRAFFIC HANDLING WORK ONLY.

LAST REVISION DATE PLOTTED => 03-FEB-2010
08-10-09 TIME PLOTTED => 13:17

STATE OF CALIFORNIA - DEPARTMENT OF TRANSPORTATION
CONSULTANT FUNCTIONAL SUPERVISOR: LEONARD SEQUEIRA
CALCULATED-DESIGNED BY: KELSIE ANDERSON
CHECKED BY: JULIET SU
REVISED BY: KLA
DATE REVISED: 12/22/09

BORDER LAST REVISED 8/1/2008 | RELATIVE BORDER SCALE IS IN INCHES 0 1 2 3 | USERNAME => trcarol DGN FILE => c07163ma107.dgn | CU 12235 | EA 071631

Dist	COUNTY	ROUTE	POST MILES TOTAL PROJECT	SHEET No.	TOTAL SHEETS
12	Ora	22,405, 605	R0.3/R0.9, 22.3/24.0,3.0/R1.6	715	1929

REGISTERED CIVIL ENGINEER — 12/22/09 DATE

2-1-10
PLANS APPROVAL DATE

REGISTERED PROFESSIONAL ENGINEER — JULIET SU No. C56168 Exp.12/31/10 CIVIL — STATE OF CALIFORNIA

THE STATE OF CALIFORNIA OR ITS OFFICERS OR AGENTS SHALL NOT BE RESPONSIBLE FOR THE ACCURACY OR COMPLETENESS OF ELECTRONIC COPIES OF THIS PLAN SHEET.

MTS
16795 VON KARMAN AVE
SUITE 205
IRVINE, CA 92606

ORANGE COUNTY
TRANSPORTATION AUTHORITY
550 S. MAIN STREET
ORANGE, CA 92863-1584

NOTE:

1. FOR COMPLETE RIGHT OF WAY AND ACCURATE ACCESS DATA, SEE RIGHT OF WAY RECORD MAPS AT DISTRICT OFFICE.

CONSTRUCTION NOTES THIS SHEET:

1 Const REMAINDER OF "B-2" LINE.
2 Const DRAINAGE SYSTEM. SEE DRAINAGE PLANS.
3 Const PERMANENT BMP. SEE DRAINAGE PLANS.

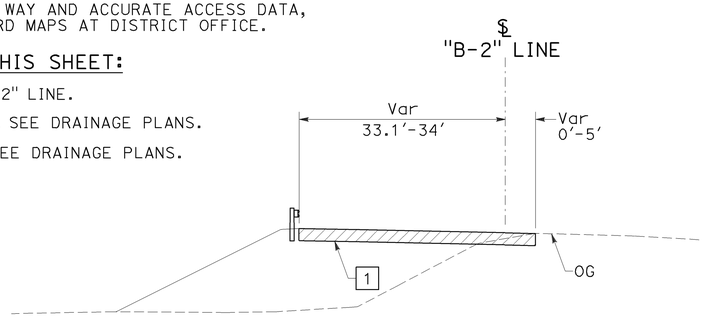

SECTION R-R
NO SCALE

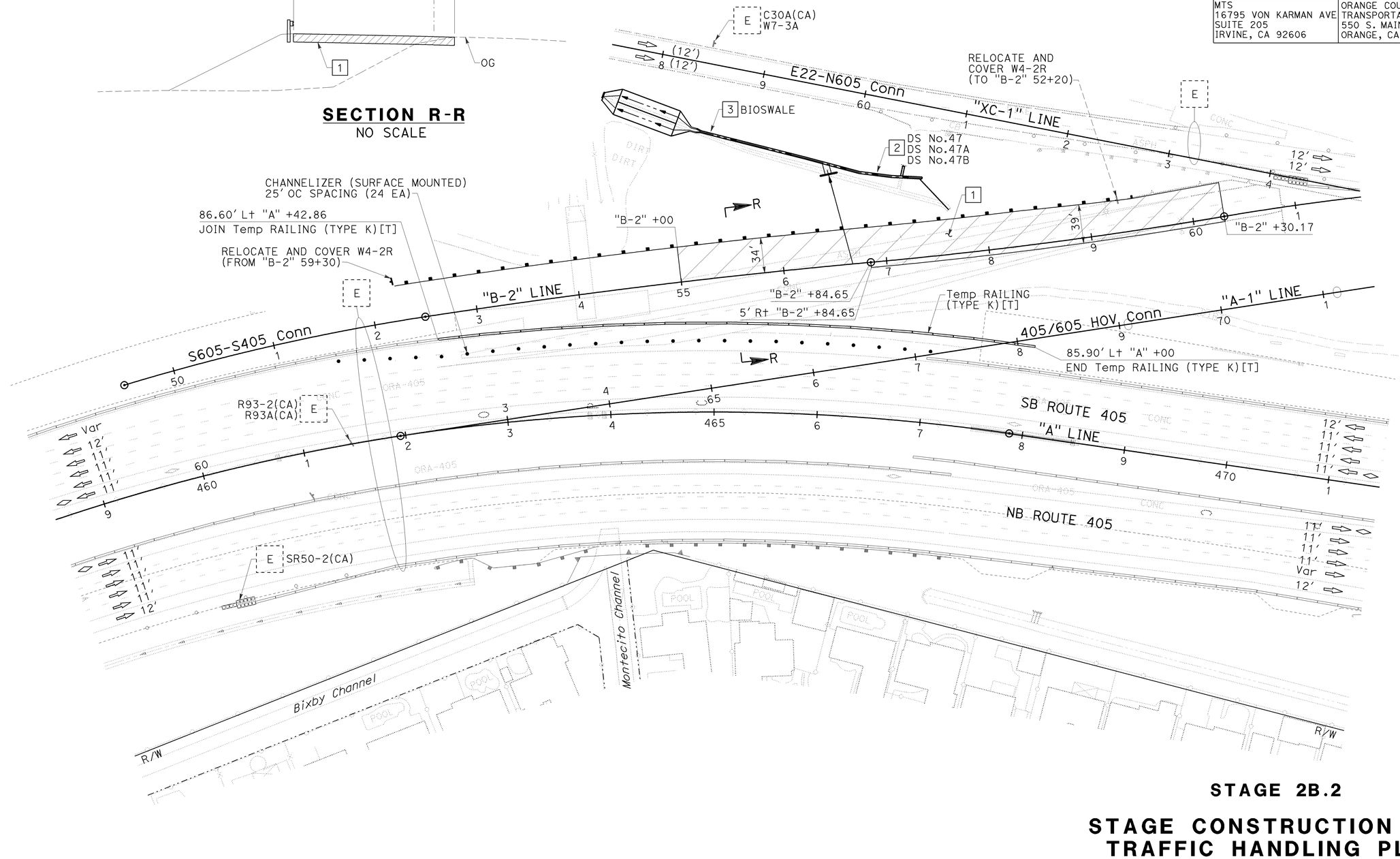

STAGE 2B.2

STAGE CONSTRUCTION AND TRAFFIC HANDLING PLAN

SCALE: 1" = 50'

SC-108

THIS PLAN ACCURATE FOR STAGE CONSTRUCTION AND TRAFFIC HANDLING WORK ONLY.

REVISED BY	DATE REVISED
KLA	12/22/09

CALCULATED-DESIGNED BY: KELSIE ANDERSON
CHECKED BY: JULIET SU
CONSULTANT FUNCTIONAL SUPERVISOR: LEONARD SEQUEIRA
STATE OF CALIFORNIA - DEPARTMENT OF TRANSPORTATION
Caltrans

LAST REVISION: DATE PLOTTED => 03-FEB-2010
08-10-09 TIME PLOTTED => 13:17

BORDER LAST REVISED 8/1/2008 | RELATIVE BORDER SCALE IS IN INCHES 0 1 2 3 | USERNAME => trcarol DGN FILE => c07163ma108.dgn | CU 12235 | EA 071631

Dist	COUNTY	ROUTE	POST MILES TOTAL PROJECT	SHEET No.	TOTAL SHEETS
12	Ora	22,405, 605	R0.3/R0.9, 22.3/24.0,3.0/R1.6	716	1929

REGISTERED CIVIL ENGINEER — 12/22/09 DATE

2-1-10
PLANS APPROVAL DATE

REGISTERED PROFESSIONAL ENGINEER
JULIET SU
No. C56168
Exp.12/31/10
CIVIL
STATE OF CALIFORNIA

THE STATE OF CALIFORNIA OR ITS OFFICERS OR AGENTS SHALL NOT BE RESPONSIBLE FOR THE ACCURACY OR COMPLETENESS OF ELECTRONIC COPIES OF THIS PLAN SHEET.

MTS
16795 VON KARMAN AVE
SUITE 205
IRVINE, CA 92606

ORANGE COUNTY
TRANSPORTATION AUTHORITY
550 S. MAIN STREET
ORANGE, CA 92863-1584

NOTE:

1. FOR COMPLETE RIGHT OF WAY AND ACCURATE ACCESS DATA, SEE RIGHT OF WAY RECORD MAPS AT DISTRICT OFFICE.

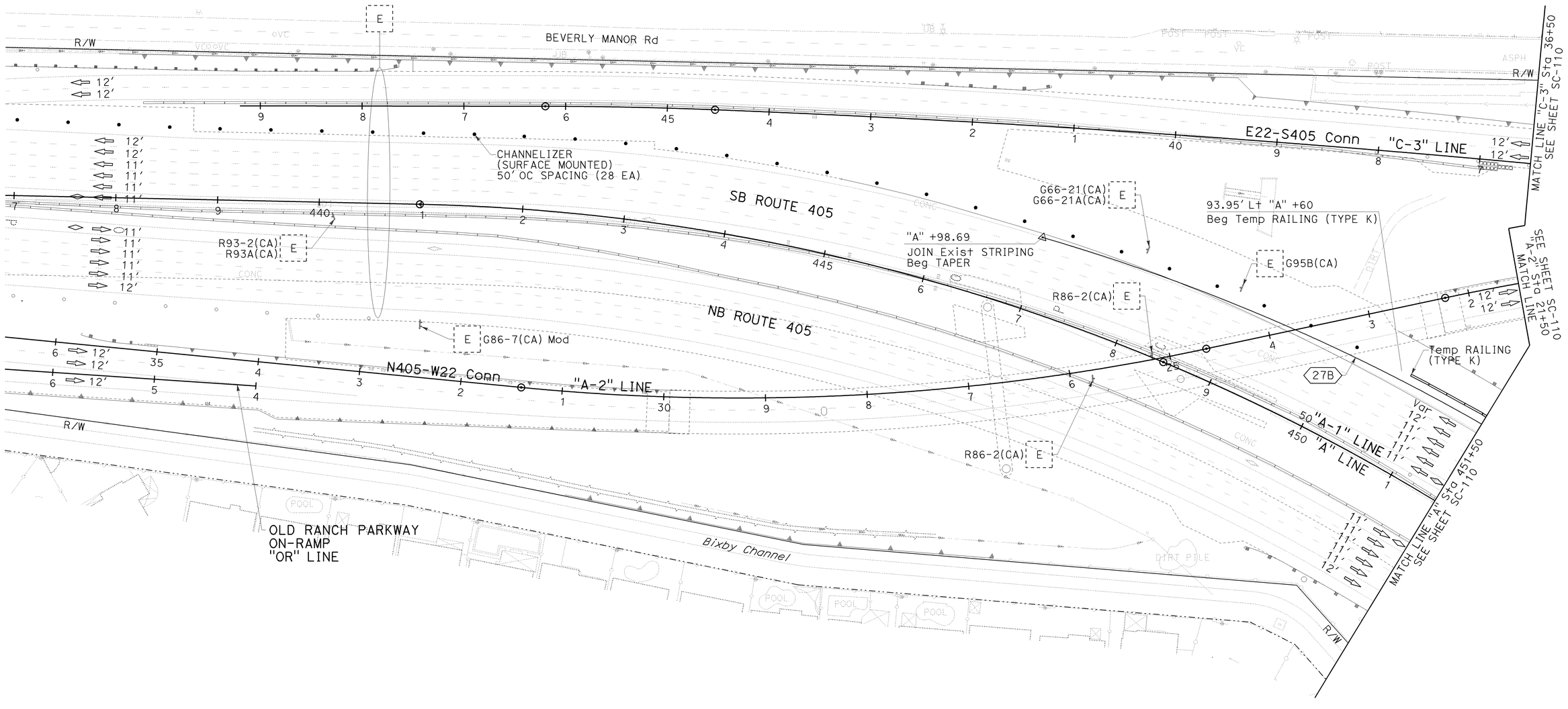

STAGE 2B.3

STAGE CONSTRUCTION AND TRAFFIC HANDLING PLAN

SCALE: 1" = 50′

SC-109

THIS PLAN ACCURATE FOR STAGE CONSTRUCTION AND TRAFFIC HANDLING WORK ONLY.

REVISED BY	DATE REVISED
KLA	12/22/09

KELSIE ANDERSON — CALCULATED-DESIGNED BY
JULIET SU — CHECKED BY
LEONARD SEQUEIRA — CONSULTANT FUNCTIONAL SUPERVISOR
STATE OF CALIFORNIA - DEPARTMENT OF TRANSPORTATION — Caltrans

LAST REVISION 08-10-09
DATE PLOTTED => 03-FEB-2010
TIME PLOTTED => 13:18

BORDER LAST REVISED 8/1/2008
RELATIVE BORDER SCALE IS IN INCHES 0 1 2 3
USERNAME => trcarol
DGN FILE => c07163ma109.dgn
CU 12235
EA 071631

Dist	COUNTY	ROUTE	POST MILES TOTAL PROJECT	SHEET No.	TOTAL SHEETS
12	Ora	22,405, 605	R0.3/R0.9, 22.3/24.0,3.0/R1.6	717	1929

REGISTERED CIVIL ENGINEER — 12/22/09 DATE

2-1-10
PLANS APPROVAL DATE

REGISTERED PROFESSIONAL ENGINEER
JULIET SU
No. C56168
Exp.12/31/10
CIVIL
STATE OF CALIFORNIA

THE STATE OF CALIFORNIA OR ITS OFFICERS OR AGENTS SHALL NOT BE RESPONSIBLE FOR THE ACCURACY OR COMPLETENESS OF ELECTRONIC COPIES OF THIS PLAN SHEET.

MTS
16795 VON KARMAN AVE
SUITE 205
IRVINE, CA 92606

ORANGE COUNTY
TRANSPORTATION AUTHORITY
550 S. MAIN STREET
ORANGE, CA 92863-1584

NOTE:

1. FOR COMPLETE RIGHT OF WAY AND ACCURATE ACCESS DATA, SEE RIGHT OF WAY RECORD MAPS AT DISTRICT OFFICE.

CURVE DATA				
No.	R	Δ	T	L
229	2,838.00′	13°28′09"	335.13′	667.17′

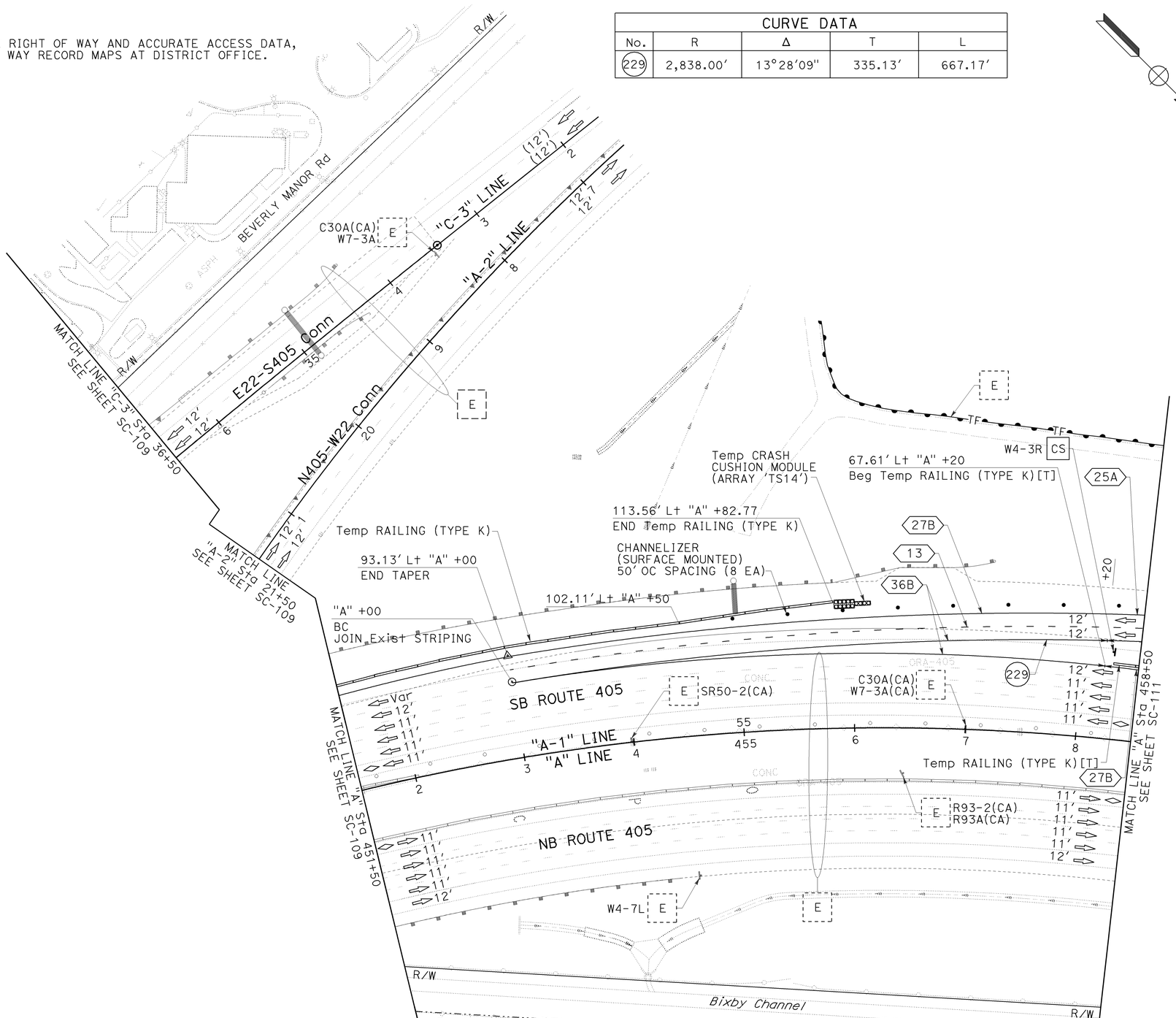

THIS PLAN ACCURATE FOR STAGE CONSTRUCTION AND TRAFFIC HANDLING WORK ONLY.

STAGE 2B.3

STAGE CONSTRUCTION AND TRAFFIC HANDLING PLAN

SCALE: 1" = 50′

SC-110

REVISED BY	DATE REVISED
KLA	12/22/09

CALCULATED-DESIGNED BY: KELSIE ANDERSON
CHECKED BY: JULIET SU
CONSULTANT FUNCTIONAL SUPERVISOR: LEONARD SEQUEIRA
STATE OF CALIFORNIA - DEPARTMENT OF TRANSPORTATION
Caltrans

LAST REVISION: DATE PLOTTED => 03-FEB-2010 TIME PLOTTED => 13:18
08-10-09

BORDER LAST REVISED 8/1/2008 | RELATIVE BORDER SCALE IS IN INCHES 0 1 2 3 | USERNAME => trcarol DGN FILE => c07163ma110.dgn | CU 12235 | EA 071631

Dist	COUNTY	ROUTE	POST MILES TOTAL PROJECT	SHEET No.	TOTAL SHEETS
12	Ora	22,405, 605	R0.3/R0.9, 22.3/24.0,3.0/R1.6	718	1929

REGISTERED CIVIL ENGINEER — 12/22/09 DATE

JULIET SU No. C56168 Exp.12/31/10 CIVIL — REGISTERED PROFESSIONAL ENGINEER — STATE OF CALIFORNIA

2-1-10
PLANS APPROVAL DATE

THE STATE OF CALIFORNIA OR ITS OFFICERS OR AGENTS SHALL NOT BE RESPONSIBLE FOR THE ACCURACY OR COMPLETENESS OF ELECTRONIC COPIES OF THIS PLAN SHEET.

MTS
16795 VON KARMAN AVE
SUITE 205
IRVINE, CA 92606

ORANGE COUNTY
TRANSPORTATION AUTHORITY
550 S. MAIN STREET
ORANGE, CA 92863-1584

NOTE:

1. FOR COMPLETE RIGHT OF WAY AND ACCURATE ACCESS DATA, SEE RIGHT OF WAY RECORD MAPS AT DISTRICT OFFICE.

CONSTRUCTION NOTES THIS SHEET:

1 Const PORTION OF SB Pvmt.
2 Const PORTION OF Br No. 55-1098E. SEE STRUCTURE PLANS.
3 Const DRAINAGE SYSTEM. SEE DRAINAGE PLANS.

CURVE DATA				
No.	R	Δ	T	L
229	2,838.00′	13°28′09"	335.13′	667.17′
230	1,500.00′	12°27′36"	163.75′	326.20′
231	7,081.00′	04°10′48"	258.42′	516.61′
232	2,700.00′	05°13′27"	123.17′	246.18′

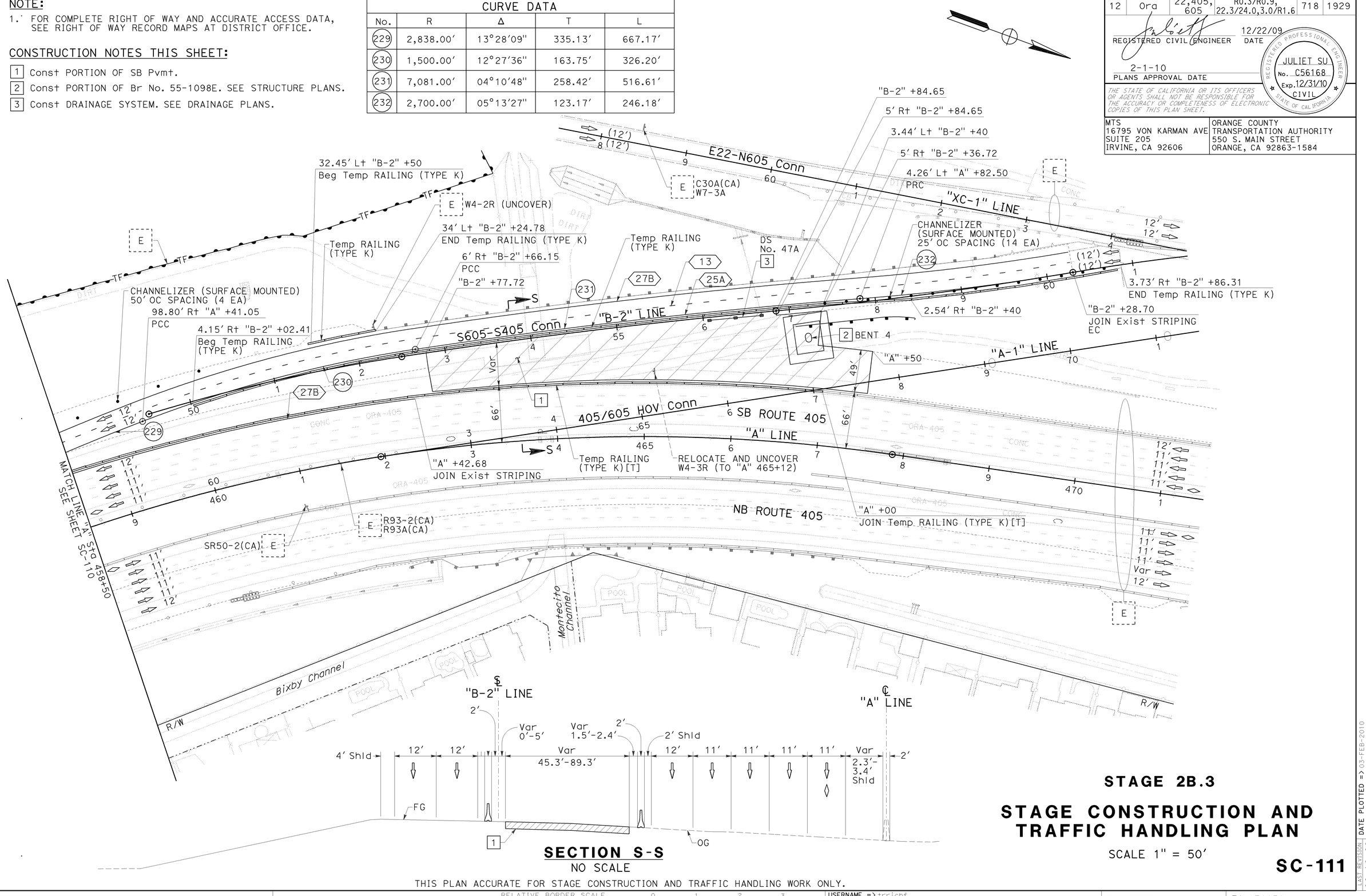

SECTION S-S
NO SCALE

THIS PLAN ACCURATE FOR STAGE CONSTRUCTION AND TRAFFIC HANDLING WORK ONLY.

STAGE 2B.3

STAGE CONSTRUCTION AND TRAFFIC HANDLING PLAN

SCALE 1" = 50′

SC-111

REVISED BY	DATE REVISED
KLA	12/22/09

KELSIE ANDERSON — JULIET SU — CALCULATED-DESIGNED BY — CHECKED BY

CONSULTANT FUNCTIONAL SUPERVISOR — LEONARD SEQUEIRA

STATE OF CALIFORNIA - DEPARTMENT OF TRANSPORTATION — Caltrans

LAST REVISION DATE PLOTTED => 03-FEB-2010
08-10-09 TIME PLOTTED => 13:45

BORDER LAST REVISED 8/1/2008 — RELATIVE BORDER SCALE IS IN INCHES 0 1 2 3 — USERNAME => trrichf — DGN FILE => c07163ma111.dgn — CU 12235 — EA 071631

NOTE:

1. FOR COMPLETE RIGHT OF WAY AND ACCURATE ACCESS DATA, SEE RIGHT OF WAY RECORD MAPS AT DISTRICT OFFICE.

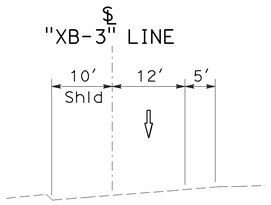

SECTION R-R
NO SCALE

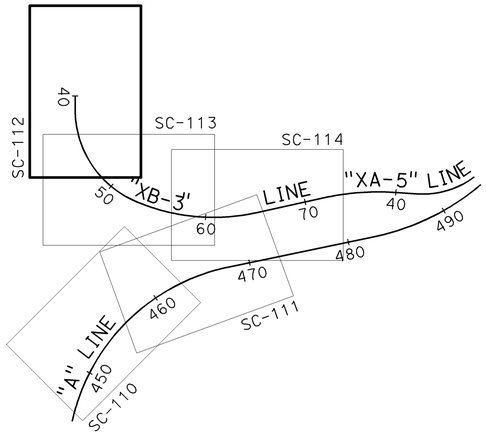

KEY MAP
(SC-112 AND SC-114)

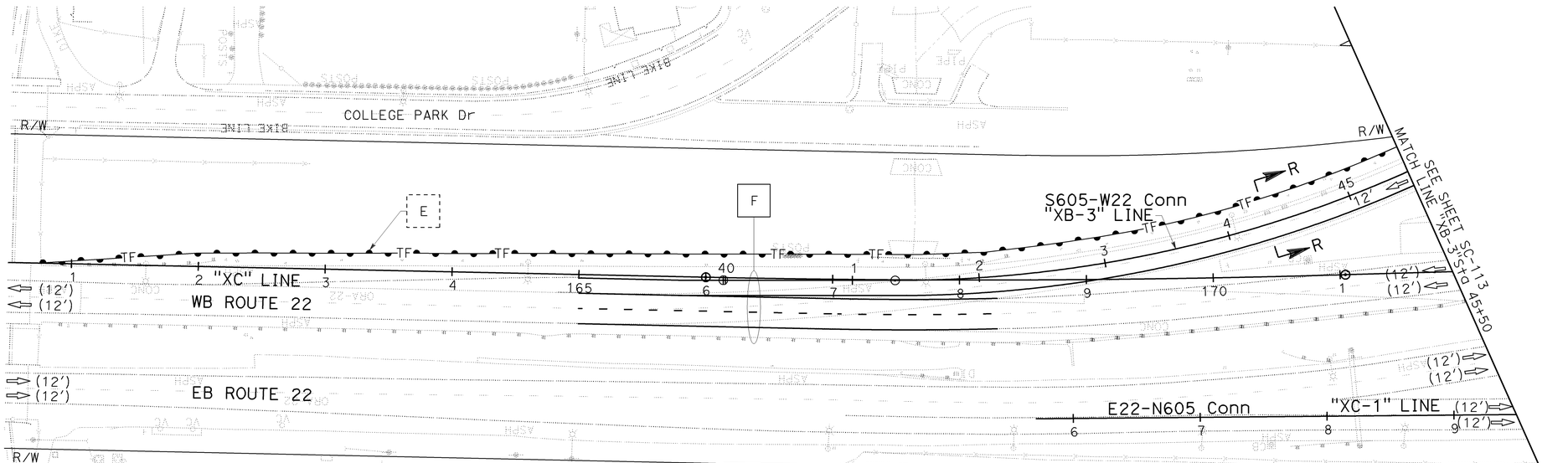

STAGE 2B.3

STAGE CONSTRUCTION AND TRAFFIC HANDLING PLAN

SCALE 1" = 50'

SC-112

THIS PLAN ACCURATE FOR STAGE CONSTRUCTION AND TRAFFIC HANDLING WORK ONLY.

Dist	COUNTY	ROUTE	POST MILES TOTAL PROJECT	SHEET No.	TOTAL SHEETS
12	Ora	22,405, 605	R0.3/R0.9, 22.3/24.0,3.0/R1.6	719	1929

REGISTERED CIVIL ENGINEER — DATE 12/22/09

2-1-10
PLANS APPROVAL DATE

REGISTERED PROFESSIONAL ENGINEER — JULIET SU No. C56168 Exp.12/31/10 CIVIL — STATE OF CALIFORNIA

THE STATE OF CALIFORNIA OR ITS OFFICERS OR AGENTS SHALL NOT BE RESPONSIBLE FOR THE ACCURACY OR COMPLETENESS OF ELECTRONIC COPIES OF THIS PLAN SHEET.

MTS
16795 VON KARMAN AVE
SUITE 205
IRVINE, CA 92606

ORANGE COUNTY
TRANSPORTATION AUTHORITY
550 S. MAIN STREET
ORANGE, CA 92863-1584

CALCULATED-DESIGNED BY: KELSIE ANDERSON
CHECKED BY: JULIET SU
REVISED BY: KLA
DATE REVISED: 12/22/09
CONSULTANT FUNCTIONAL SUPERVISOR: LEONARD SEQUEIRA
STATE OF CALIFORNIA - DEPARTMENT OF TRANSPORTATION
Caltrans

LAST REVISION DATE PLOTTED => 03-FEB-2010
TIME PLOTTED => 13:45
08-10-09

BORDER LAST REVISED 8/1/2008
RELATIVE BORDER SCALE IS IN INCHES 0 1 2 3
USERNAME => trrichf
DGN FILE => c07163ma112.dgn
CU 12235
EA 071631

NOTE:

1. FOR COMPLETE RIGHT OF WAY AND ACCURATE ACCESS DATA, SEE RIGHT OF WAY RECORD MAPS AT DISTRICT OFFICE.

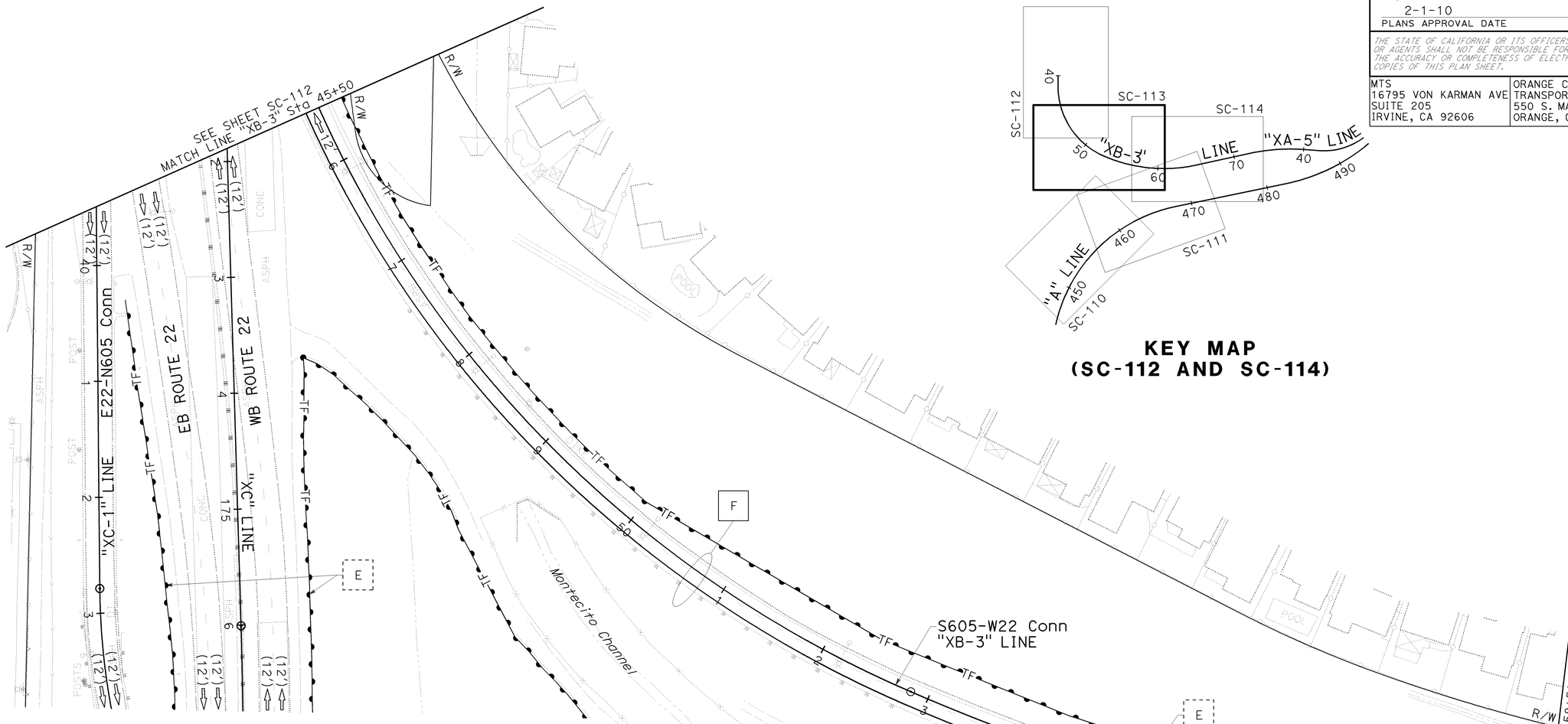

KEY MAP
(SC-112 AND SC-114)

Dist	COUNTY	ROUTE	POST MILES TOTAL PROJECT	SHEET No.	TOTAL SHEETS
12	Ora	22,405, 605	R0.3/R0.9, 22.3/24.0,3.0/R1.6	720	1929

REGISTERED CIVIL ENGINEER — 12/22/09 DATE

2-1-10
PLANS APPROVAL DATE

REGISTERED PROFESSIONAL ENGINEER
JULIET SU
No. C56168
Exp.12/31/10
CIVIL
STATE OF CALIFORNIA

THE STATE OF CALIFORNIA OR ITS OFFICERS OR AGENTS SHALL NOT BE RESPONSIBLE FOR THE ACCURACY OR COMPLETENESS OF ELECTRONIC COPIES OF THIS PLAN SHEET.

MTS
16795 VON KARMAN AVE
SUITE 205
IRVINE, CA 92606

ORANGE COUNTY
TRANSPORTATION AUTHORITY
550 S. MAIN STREET
ORANGE, CA 92863-1584

STAGE 2B.3

STAGE CONSTRUCTION AND TRAFFIC HANDLING PLAN

SCALE 1" = 50'

SC-113

THIS PLAN ACCURATE FOR STAGE CONSTRUCTION AND TRAFFIC HANDLING WORK ONLY.

REVISED BY	DATE REVISED
KLA	12/22/09

CALCULATED-DESIGNED BY: KELSIE ANDERSON
CHECKED BY: JULIET SU
CONSULTANT FUNCTIONAL SUPERVISOR: LEONARD SEQUEIRA
STATE OF CALIFORNIA - DEPARTMENT OF TRANSPORTATION
Caltrans

LAST REVISION: DATE PLOTTED => 03-FEB-2010
08-10-09 TIME PLOTTED => 13:45

BORDER LAST REVISED 8/1/2008

RELATIVE BORDER SCALE IS IN INCHES 0 1 2 3

USERNAME => trrichf
DGN FILE => c07163ma113.dgn

CU 12235

EA 071631

NOTE:

1. FOR COMPLETE RIGHT OF WAY AND ACCURATE ACCESS DATA, SEE RIGHT OF WAY RECORD MAPS AT DISTRICT OFFICE.

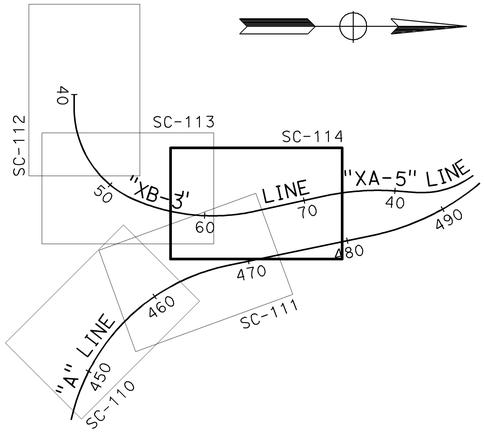

KEY MAP
(SC-112 AND SC-114)

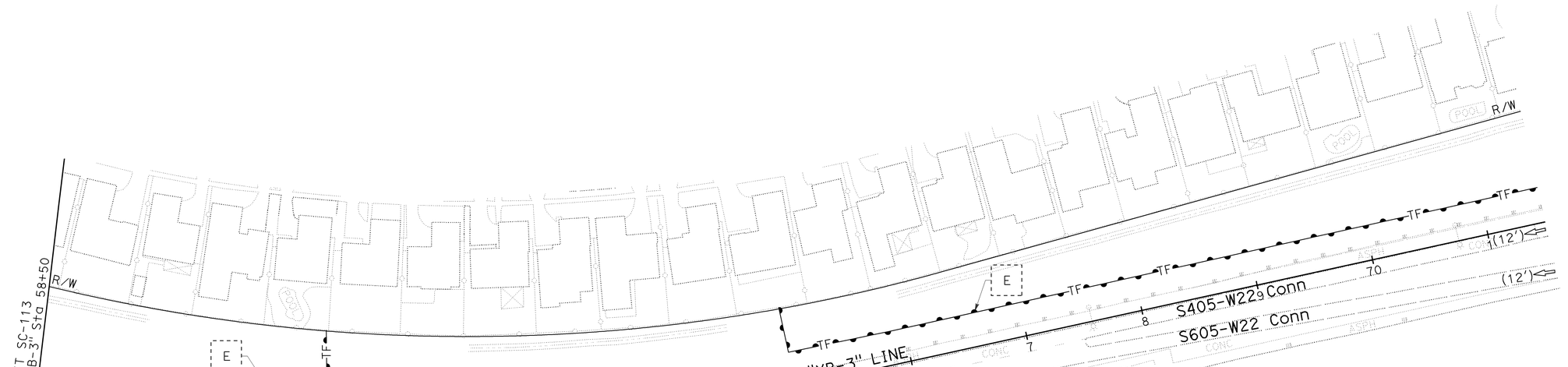

STAGE 2B.3

STAGE CONSTRUCTION AND TRAFFIC HANDLING PLAN

SCALE 1" = 50'

SC-114

THIS PLAN ACCURATE FOR STAGE CONSTRUCTION AND TRAFFIC HANDLING WORK ONLY.

Dist	COUNTY	ROUTE	POST MILES TOTAL PROJECT	SHEET No.	TOTAL SHEETS
12	Ora	22,405, 605	R0.3/R0.9, 22.3/24.0,3.0/R1.6	721	1929

REGISTERED CIVIL ENGINEER — 12/22/09 DATE

2-1-10
PLANS APPROVAL DATE

REGISTERED PROFESSIONAL ENGINEER
JULIET SU
No. C56168
Exp.12/31/10
CIVIL
STATE OF CALIFORNIA

THE STATE OF CALIFORNIA OR ITS OFFICERS OR AGENTS SHALL NOT BE RESPONSIBLE FOR THE ACCURACY OR COMPLETENESS OF ELECTRONIC COPIES OF THIS PLAN SHEET.

MTS
16795 VON KARMAN AVE
SUITE 205
IRVINE, CA 92606

ORANGE COUNTY
TRANSPORTATION AUTHORITY
550 S. MAIN STREET
ORANGE, CA 92863-1584

REVISED BY	DATE REVISED
KLA	12/22/09

CALCULATED-DESIGNED BY	CHECKED BY
KELSIE ANDERSON	JULIET SU

CONSULTANT FUNCTIONAL SUPERVISOR: LEONARD SEQUEIRA

STATE OF CALIFORNIA - DEPARTMENT OF TRANSPORTATION
Caltrans

LAST REVISION 08-10-09
DATE PLOTTED => 03-FEB-2010
TIME PLOTTED => 13:45

Dist	COUNTY	ROUTE	POST MILES TOTAL PROJECT	SHEET No.	TOTAL SHEETS
12	Ora	22,405, 605	R0.3/R0.9, 22.3/24.0,3.0/R1.6	722	1929

REGISTERED CIVIL ENGINEER — 12/22/09 DATE

2-1-10 PLANS APPROVAL DATE

REGISTERED PROFESSIONAL ENGINEER — JULIET SU No. C56168 Exp.12/31/10 CIVIL — STATE OF CALIFORNIA

THE STATE OF CALIFORNIA OR ITS OFFICERS OR AGENTS SHALL NOT BE RESPONSIBLE FOR THE ACCURACY OR COMPLETENESS OF ELECTRONIC COPIES OF THIS PLAN SHEET.

MTS
16795 VON KARMAN AVE
SUITE 205
IRVINE, CA 92606

ORANGE COUNTY
TRANSPORTATION AUTHORITY
550 S. MAIN STREET
ORANGE, CA 92863-1584

NOTE:

1. FOR COMPLETE RIGHT OF WAY AND ACCURATE ACCESS DATA, SEE RIGHT OF WAY RECORD MAPS AT DISTRICT OFFICE.

CONSTRUCTION NOTE THIS SHEET:

2 Const PORTION OF NB Pvmt.

CURVE DATA				
No.	R	Δ	T	L
233	3,000.00′	03°16′08"	85.61′	171.16′
234	2,000.00′	03°47′14"	66.12′	132.20′

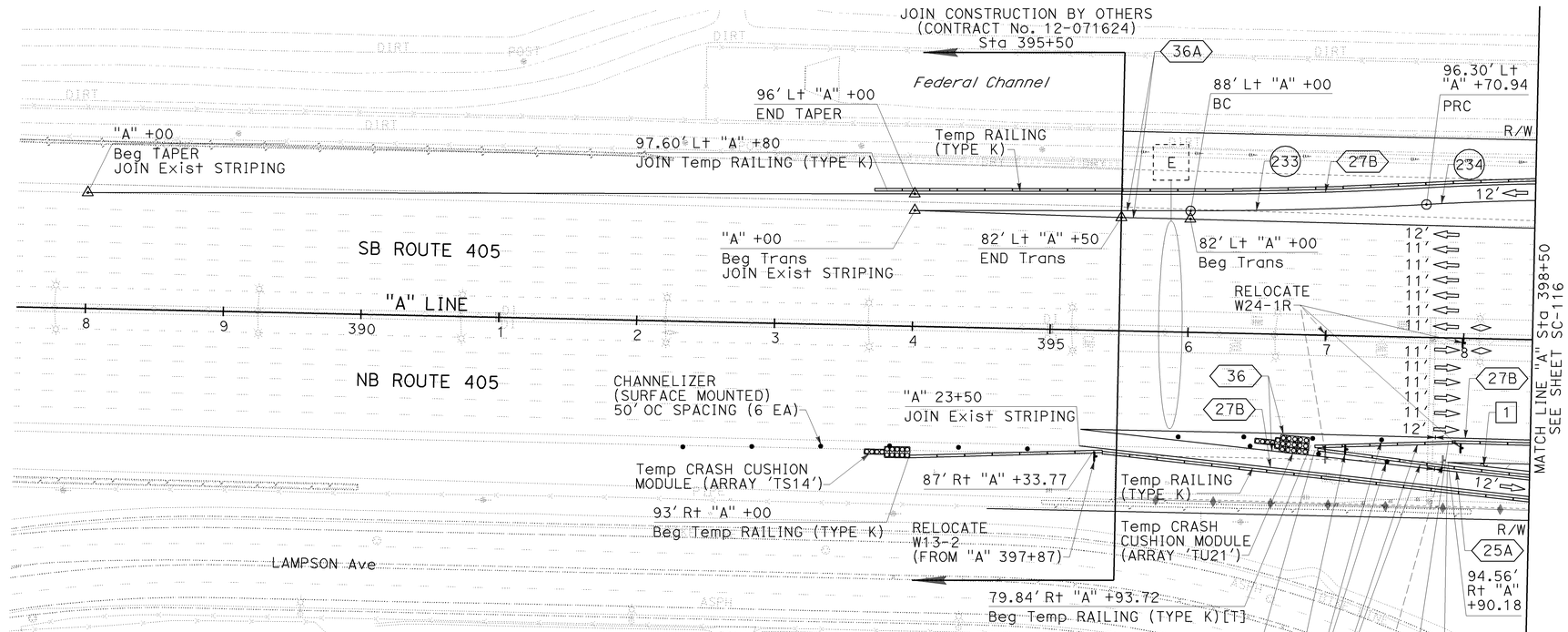

STAGE 2C.1

STAGE CONSTRUCTION AND TRAFFIC HANDLING PLAN

SCALE 1" = 50′

SC-115

THIS PLAN ACCURATE FOR STAGE CONSTRUCTION AND TRAFFIC HANDLING WORK ONLY.

CALCULATED-DESIGNED BY: KLA — 12/22/09
CHECKED BY: KELSIE ANDERSON — JULIET SU
REVISED BY — DATE REVISED
CONSULTANT FUNCTIONAL SUPERVISOR: LEONARD SEQUEIRA
STATE OF CALIFORNIA - DEPARTMENT OF TRANSPORTATION — Caltrans

LAST REVISION: 08-10-09 — DATE PLOTTED => 03-FEB-2010 — TIME PLOTTED => 13:46

BORDER LAST REVISED 8/1/2008 — RELATIVE BORDER SCALE IS IN INCHES 0 1 2 3 — USERNAME => trrichf — DGN FILE => c07163ma115.dgn — CU 12235 — EA 071631

Dist	COUNTY	ROUTE	POST MILES TOTAL PROJECT	SHEET No.	TOTAL SHEETS
12	Ora	22,405, 605	R0.3/R0.9, 22.3/24.0,3.0/R1.6	723	1929

REGISTERED CIVIL ENGINEER — 12/22/09 DATE

JULIET SU No. C56168 Exp.12/31/10 CIVIL — REGISTERED PROFESSIONAL ENGINEER — STATE OF CALIFORNIA

2-1-10
PLANS APPROVAL DATE

THE STATE OF CALIFORNIA OR ITS OFFICERS OR AGENTS SHALL NOT BE RESPONSIBLE FOR THE ACCURACY OR COMPLETENESS OF ELECTRONIC COPIES OF THIS PLAN SHEET.

MTS
16795 VON KARMAN AVE
SUITE 205
IRVINE, CA 92606

ORANGE COUNTY
TRANSPORTATION AUTHORITY
550 S. MAIN STREET
ORANGE, CA 92863-1584

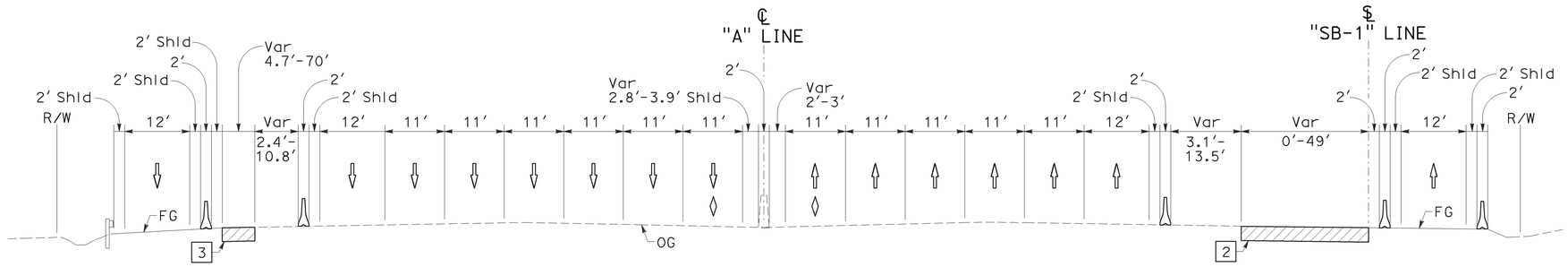

SECTION A-A
NO SCALE

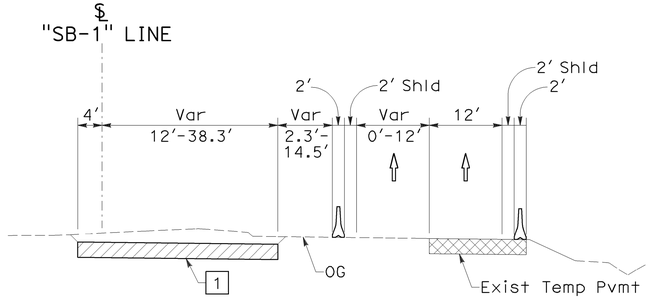

SECTION B-B
NO SCALE

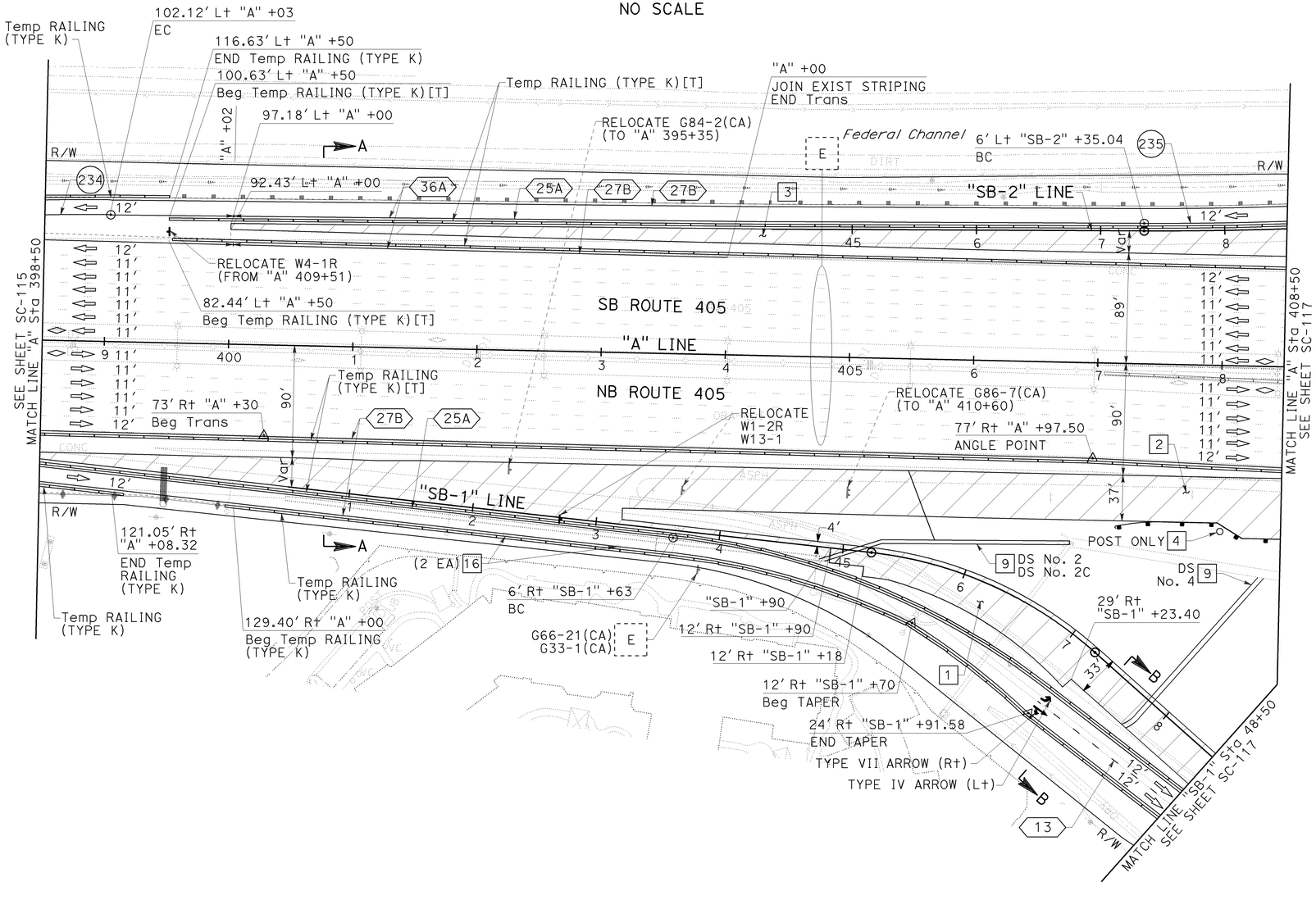

NOTE:

1. FOR COMPLETE RIGHT OF WAY AND ACCURATE ACCESS DATA, SEE RIGHT OF WAY RECORD MAPS AT DISTRICT OFFICE.

CONSTRUCTION NOTES THIS SHEET:

1 Const PORTION OF "SB-1" LINE.
2 Const PORTION OF NB Pvmt.
3 Const PORTION OF SB Pvmt.
4 Const OH SIGN. SEE SIGN PLANS.
9 Const DRAINAGE SYSTEM. SEE DRAINAGE PLANS.
16 REMOVE AND REUSE Exist GRATE AND PLACE BICYCLE PROOF GRATE. TACK WELD BICYCLE PROOF GRATE. WHEN NO LONGER REQUIRED FOR TEMPORARY TRAFFIC, SALVAGE BICYCLE PROOF GRATE AND REUSE Exist GRATE AT SAME LOCATION. DO NOT TACK WELD REUSED GRATE.

CURVE DATA				
No.	R	Δ	T	L
234	2,000.00'	03°47'14"	66.12'	132.20'
235	2,994.00'	03°17'04"	85.84'	171.63'

STAGE 2C.1

STAGE CONSTRUCTION AND TRAFFIC HANDLING PLAN

SCALE 1" = 50'

SC-116

THIS PLAN ACCURATE FOR STAGE CONSTRUCTION AND TRAFFIC HANDLING WORK ONLY.

CALCULATED-DESIGNED BY	CHECKED BY	REVISED BY	DATE REVISED
KELSIE ANDERSON	JULIET SU	KLA	12/22/09

CONSULTANT FUNCTIONAL SUPERVISOR: LEONARD SEQUEIRA

STATE OF CALIFORNIA - DEPARTMENT OF TRANSPORTATION

LAST REVISION | DATE PLOTTED => 03-FEB-2010 | 08-10-09 | TIME PLOTTED => 13:46

BORDER LAST REVISED 8/1/2008 | RELATIVE BORDER SCALE IS IN INCHES 0 1 2 3 | USERNAME => trrichf | DGN FILE => c07163ma116.dgn | CU 12235 | EA 071631

Dist	COUNTY	ROUTE	POST MILES TOTAL PROJECT	SHEET No.	TOTAL SHEETS
12	Ora	22,405, 605	R0.3/R0.9, 22.3/24.0,3.0/R1.6	724	1929

REGISTERED CIVIL ENGINEER — 12/22/09 DATE

2-1-10 PLANS APPROVAL DATE

JULIET SU No. C56168 Exp.12/31/10 CIVIL — REGISTERED PROFESSIONAL ENGINEER — STATE OF CALIFORNIA

THE STATE OF CALIFORNIA OR ITS OFFICERS OR AGENTS SHALL NOT BE RESPONSIBLE FOR THE ACCURACY OR COMPLETENESS OF ELECTRONIC COPIES OF THIS PLAN SHEET.

MTS
16795 VON KARMAN AVE
SUITE 205
IRVINE, CA 92606

ORANGE COUNTY TRANSPORTATION AUTHORITY
550 S. MAIN STREET
ORANGE, CA 92863-1584

NOTES:

1. FOR COMPLETE RIGHT OF WAY AND ACCURATE ACCESS DATA, SEE RIGHT OF WAY RECORD MAPS AT DISTRICT OFFICE.
2. SEE SHEET SC-117 FOR SECTIONS C-C AND D-D.

CONSTRUCTION NOTES THIS SHEET:

1 Const PORTION OF "SB-1" LINE.
2 Const PORTION OF NB Pvmt.
3 Const PORTION OF SB Pvmt.
5 Const PORTION OF "SB-2" LINE.
6 Const Temp Pvmt. CONSECUTIVE OVERNIGHT LANE CLOSURES REQUIRED.
7 Const PORTION OF Br No. 55-1099. SEE STRUCTURE PLANS.
8 RECONSTRUCT MAINLINE ELEMENTS IMPACTED BY Br Const.
9 Const DRAINAGE SYSTEM. SEE DRAINAGE PLANS.
10 Const PORTION OF SEAL BEACH Blvd IMPROVEMENTS.
15 COLD PLANE AND OVERLAY. CONSECUTIVE OVERNIGHT LANE CLOSURES REQUIRED.

CURVE DATA				
No.	R	Δ	T	L
235	2,994.00′	03°17′04"	85.84′	171.63′
236	419.00′	04°27′38"	16.32′	32.62′
237	414.29′	35°21′54"	132.08′	255.72′
238	92.00′	29°48′47"	24.49′	47.87′
239	157.00′	24°15′03"	33.73′	66.45′
240	175.00′	143°30′27"	530.82′	438.32′
241	500.00′	12°34′41"	55.10′	109.76′

STAGE 2C.1

STAGE CONSTRUCTION AND TRAFFIC HANDLING PLAN

SCALE 1" = 50′

SC-117

THIS PLAN ACCURATE FOR STAGE CONSTRUCTION AND TRAFFIC HANDLING WORK ONLY.

STATE OF CALIFORNIA - DEPARTMENT OF TRANSPORTATION
CONSULTANT FUNCTIONAL SUPERVISOR: LEONARD SEQUEIRA
CALCULATED-DESIGNED BY: KELSIE ANDERSON
CHECKED BY: JULIET SU
REVISED BY: KLA
DATE REVISED: 12/22/09
LAST REVISION: 08-10-09
DATE PLOTTED => 03-FEB-2010
TIME PLOTTED => 13:46

BORDER LAST REVISED 8/1/2008 | RELATIVE BORDER SCALE IS IN INCHES 0 1 2 3 | USERNAME => trrichf DGN FILE => c07163ma117.dgn | CU 12235 | EA 071631

Dist	COUNTY	ROUTE	POST MILES TOTAL PROJECT	SHEET No.	TOTAL SHEETS
12	Ora	22,405, 605	R0.3/R0.9, 22.3/24.0,3.0/R1.6	725	1929

REGISTERED CIVIL ENGINEER — DATE 12/22/09

2-1-10
PLANS APPROVAL DATE

REGISTERED PROFESSIONAL ENGINEER
JULIET SU
No. C56168
Exp.12/31/10
CIVIL
STATE OF CALIFORNIA

THE STATE OF CALIFORNIA OR ITS OFFICERS OR AGENTS SHALL NOT BE RESPONSIBLE FOR THE ACCURACY OR COMPLETENESS OF ELECTRONIC COPIES OF THIS PLAN SHEET.

MTS
16795 VON KARMAN AVE
SUITE 205
IRVINE, CA 92606

ORANGE COUNTY
TRANSPORTATION AUTHORITY
550 S. MAIN STREET
ORANGE, CA 92863-1584

CONSTRUCTION NOTES THIS SHEET:

1 Const PORTION OF "SB-1" LINE.
5 Const PORTION OF "C-1" LINE.
6 CONSTRUCT Temp Pvmt. CONSECUTIVE OVERNIGHT LANE CLOSURES REQUIRED.

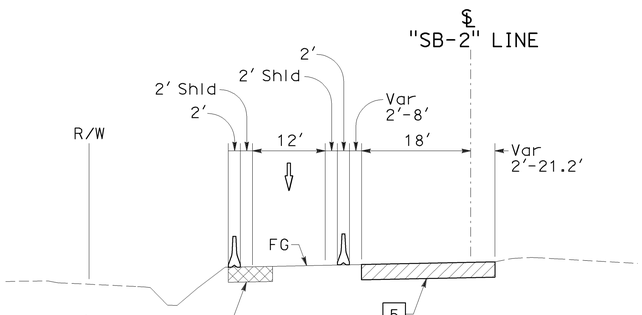

SECTION C-C

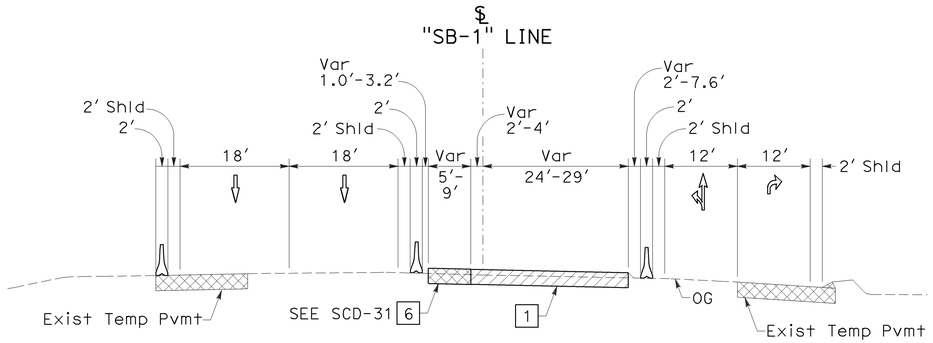

SECTION D-D

THIS PLAN ACCURATE FOR STAGE CONSTRUCTION AND TRAFFIC HANDLING WORK ONLY.

STAGE 2C.1

STAGE CONSTRUCTION AND TRAFFIC HANDLING PLAN

NO SCALE

SC-118

REVISED BY	DATE REVISED
KLA	12/22/09

CALCULATED-DESIGNED BY: KELSIE ANDERSON
CHECKED BY: JULIET SU
CONSULTANT FUNCTIONAL SUPERVISOR: LEONARD SEQUEIRA
STATE OF CALIFORNIA - DEPARTMENT OF TRANSPORTATION
Caltrans

LAST REVISION DATE PLOTTED => 03-FEB-2010
TIME PLOTTED => 13:46
08-10-09

Dist	COUNTY	ROUTE	POST MILES TOTAL PROJECT	SHEET No.	TOTAL SHEETS
12	Ora	22,405, 605	R0.3/R0.9, 22.3/24.0,3.0/R1.6	726	1929

REGISTERED CIVIL ENGINEER — DATE 12/22/09

JULIET SU No. C56168 Exp.12/31/10 CIVIL — REGISTERED PROFESSIONAL ENGINEER — STATE OF CALIFORNIA

2-1-10
PLANS APPROVAL DATE

THE STATE OF CALIFORNIA OR ITS OFFICERS OR AGENTS SHALL NOT BE RESPONSIBLE FOR THE ACCURACY OR COMPLETENESS OF ELECTRONIC COPIES OF THIS PLAN SHEET.

MTS
16795 VON KARMAN AVE
SUITE 205
IRVINE, CA 92606

ORANGE COUNTY
TRANSPORTATION AUTHORITY
550 S. MAIN STREET
ORANGE, CA 92863-1584

NOTE:

1. FOR COMPLETE RIGHT OF WAY AND ACCURATE ACCESS DATA, SEE RIGHT OF WAY RECORD MAPS AT DISTRICT OFFICE.

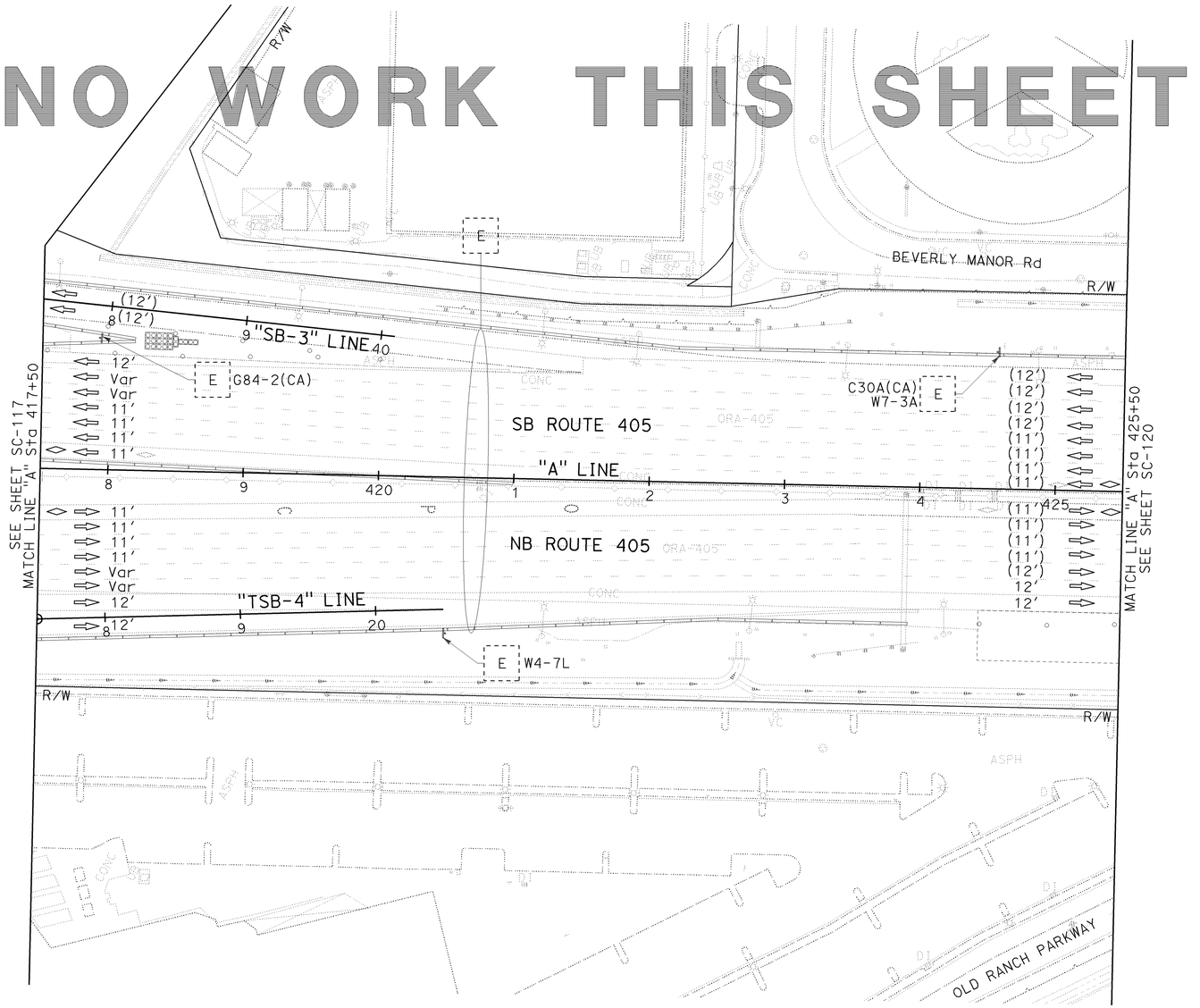

STAGE 2C.1

STAGE CONSTRUCTION AND TRAFFIC HANDLING PLAN

SCALE 1" = 50'

SC-119

THIS PLAN ACCURATE FOR STAGE CONSTRUCTION AND TRAFFIC HANDLING WORK ONLY.

REVISED BY	DATE REVISED
KLA	12/22/09

CALCULATED-DESIGNED BY: KELSIE ANDERSON
CHECKED BY: JULIET SU
CONSULTANT FUNCTIONAL SUPERVISOR: LEONARD SEQUEIRA
STATE OF CALIFORNIA - DEPARTMENT OF TRANSPORTATION
Caltrans

LAST REVISION DATE PLOTTED => 03-FEB-2010
TIME PLOTTED => 13:46
08-10-09

BORDER LAST REVISED 8/1/2008
RELATIVE BORDER SCALE IS IN INCHES 0 1 2 3
USERNAME => trrichf
DGN FILE => c07163ma119.dgn
CU 12235
EA 071631

Dist	COUNTY	ROUTE	POST MILES TOTAL PROJECT	SHEET No.	TOTAL SHEETS
12	Ora	22,405, 605	R0.3/R0.9, 22.3/24.0,3.0/R1.6	727	1929

REGISTERED CIVIL ENGINEER — 12/22/09 DATE

2-1-10
PLANS APPROVAL DATE

REGISTERED PROFESSIONAL ENGINEER — JULIET SU No. C56168 Exp.12/31/10 CIVIL — STATE OF CALIFORNIA

THE STATE OF CALIFORNIA OR ITS OFFICERS OR AGENTS SHALL NOT BE RESPONSIBLE FOR THE ACCURACY OR COMPLETENESS OF ELECTRONIC COPIES OF THIS PLAN SHEET.

MTS
16795 VON KARMAN AVE
SUITE 205
IRVINE, CA 92606

ORANGE COUNTY
TRANSPORTATION AUTHORITY
550 S. MAIN STREET
ORANGE, CA 92863-1584

NOTE:

1. FOR COMPLETE RIGHT OF WAY AND ACCURATE ACCESS DATA, SEE RIGHT OF WAY RECORD MAPS AT DISTRICT OFFICE.

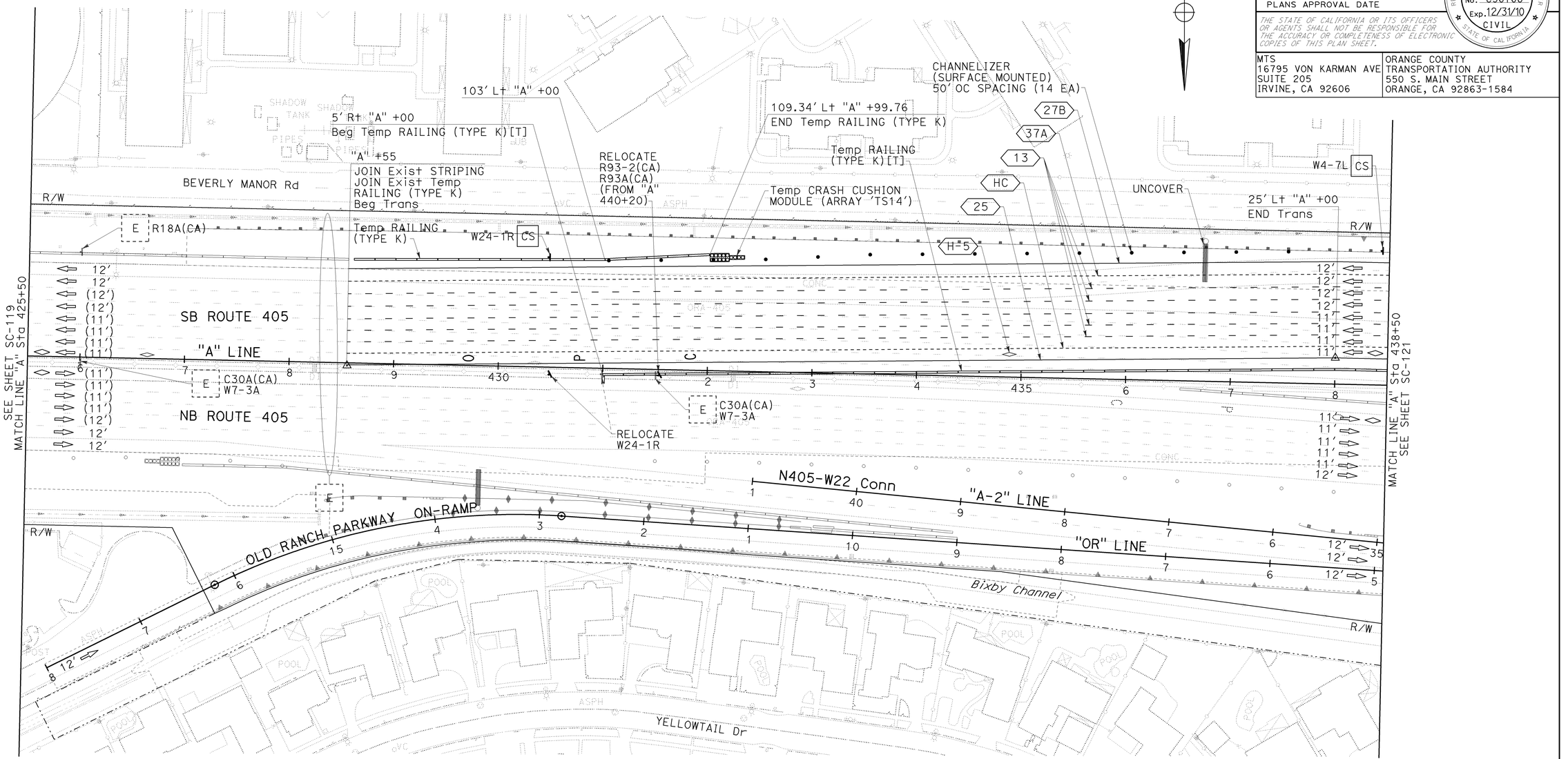

STAGE 2C.1

STAGE CONSTRUCTION AND TRAFFIC HANDLING PLAN

SCALE 1" = 50'

SC-120

THIS PLAN ACCURATE FOR STAGE CONSTRUCTION AND TRAFFIC HANDLING WORK ONLY.

REVISED BY	DATE REVISED
KLA	12/22/09

CALCULATED-DESIGNED BY: KELSIE ANDERSON
CHECKED BY: JULIET SU
CONSULTANT FUNCTIONAL SUPERVISOR: LEONARD SEQUEIRA

STATE OF CALIFORNIA - DEPARTMENT OF TRANSPORTATION

LAST REVISION 08-10-09 | DATE PLOTTED => 03-FEB-2010 | TIME PLOTTED => 13:47

BORDER LAST REVISED 8/1/2008 | RELATIVE BORDER SCALE IS IN INCHES (0 1 2 3) | USERNAME => trrichf | DGN FILE => c07163ma120.dgn | CU 12235 | EA 071631

Dist	COUNTY	ROUTE	POST MILES TOTAL PROJECT	SHEET No.	TOTAL SHEETS
12	Ora	22,405, 605	R0.3/R0.9, 22.3/24.0,3.0/R1.6	728	1929

REGISTERED CIVIL ENGINEER — 12/22/09 DATE

2-1-10 PLANS APPROVAL DATE

REGISTERED PROFESSIONAL ENGINEER — JULIET SU No. C56168 Exp.12/31/10 CIVIL — STATE OF CALIFORNIA

THE STATE OF CALIFORNIA OR ITS OFFICERS OR AGENTS SHALL NOT BE RESPONSIBLE FOR THE ACCURACY OR COMPLETENESS OF ELECTRONIC COPIES OF THIS PLAN SHEET.

MTS
16795 VON KARMAN AVE
SUITE 205
IRVINE, CA 92606

ORANGE COUNTY
TRANSPORTATION AUTHORITY
550 S. MAIN STREET
ORANGE, CA 92863-1584

NOTE:

1. FOR COMPLETE RIGHT OF WAY AND ACCURATE ACCESS DATA, SEE RIGHT OF WAY RECORD MAPS AT DISTRICT OFFICE.

CONSTRUCTION NOTE THIS SHEET:

9 Const DRAINAGE SYSTEM. SEE DRAINAGE PLANS.

CURVE DATA				
No.	R	Δ	T	L
242	1,722.00′	22°05′18"	336.10′	663.86′
243	2,049.00′	30°56′42"	567.18′	1,106.65′

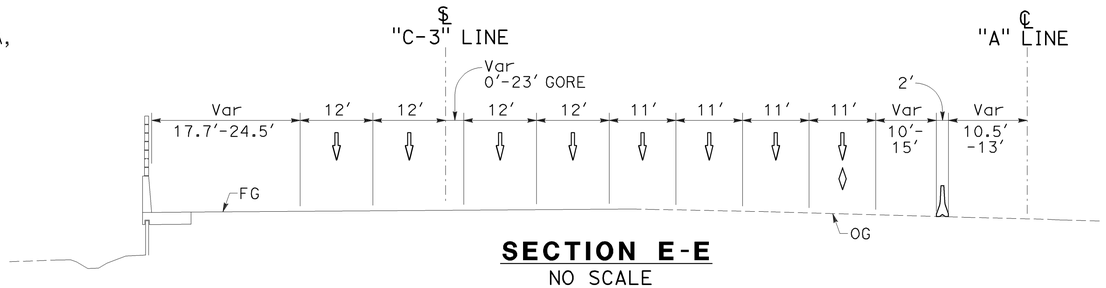

SECTION E-E
NO SCALE

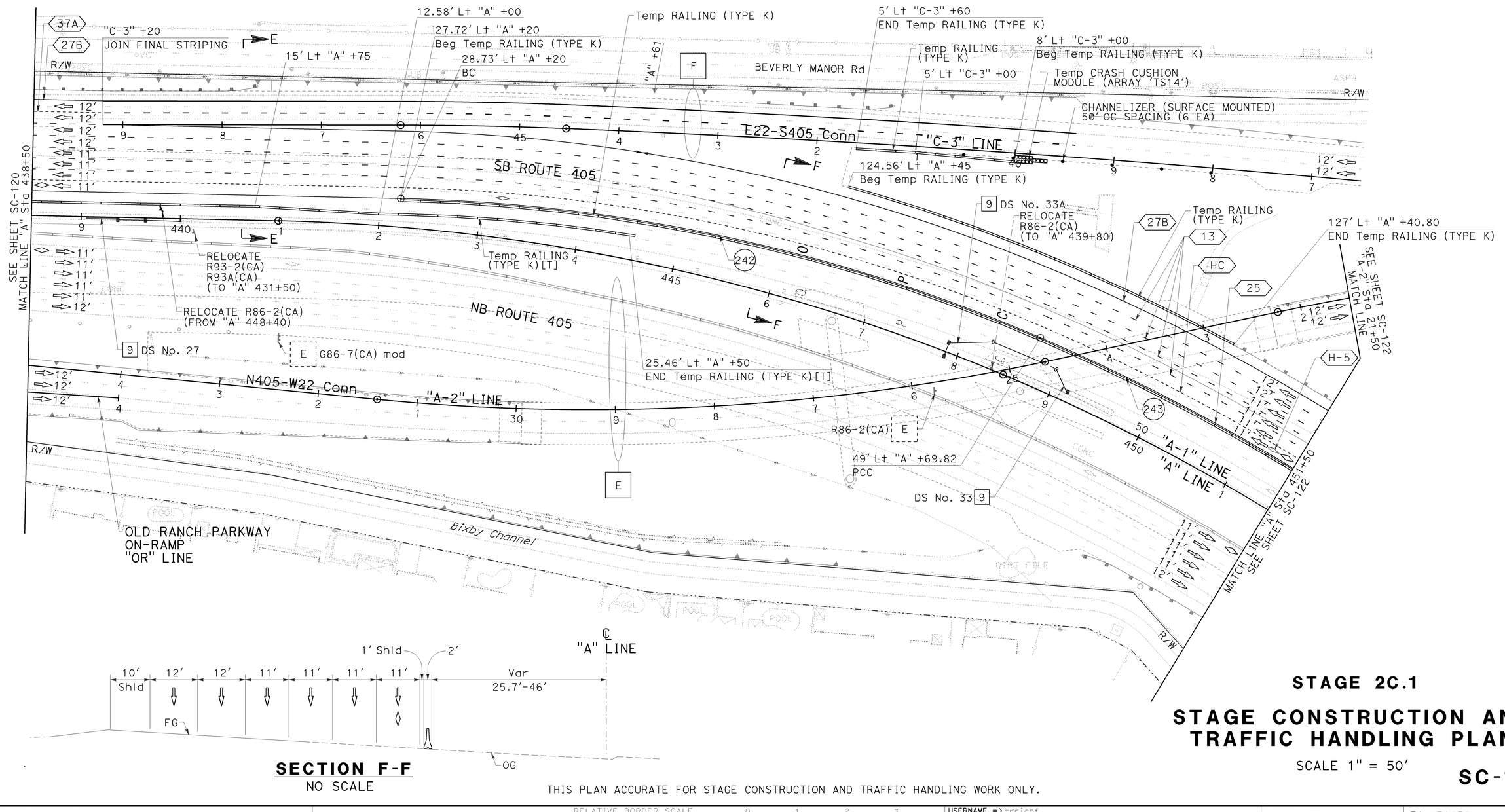

SECTION F-F
NO SCALE

THIS PLAN ACCURATE FOR STAGE CONSTRUCTION AND TRAFFIC HANDLING WORK ONLY.

STAGE 2C.1

STAGE CONSTRUCTION AND TRAFFIC HANDLING PLAN

SCALE 1" = 50′

SC-121

STATE OF CALIFORNIA - DEPARTMENT OF TRANSPORTATION — Caltrans

CONSULTANT FUNCTIONAL SUPERVISOR: LEONARD SEQUEIRA

CALCULATED-DESIGNED BY: KELSIE ANDERSON

CHECKED BY: JULIET SU

REVISED BY: KLA — DATE REVISED: 12/22/09

LAST REVISION DATE PLOTTED => 03-FEB-2010
TIME PLOTTED => 13:47
08-10-09

BORDER LAST REVISED 8/1/2008 — RELATIVE BORDER SCALE IS IN INCHES 0 1 2 3

USERNAME => trrichf
DGN FILE => c07163ma121.dgn

CU 12235 — EA 071631

Dist	COUNTY	ROUTE	POST MILES TOTAL PROJECT	SHEET No.	TOTAL SHEETS
12	Ora	22,405, 605	R0.3/R0.9, 22.3/24.0,3.0/R1.6	729	1929

REGISTERED CIVIL ENGINEER — 12/22/09 DATE

2-1-10 PLANS APPROVAL DATE

REGISTERED PROFESSIONAL ENGINEER — JULIET SU No. C56168 Exp.12/31/10 CIVIL — STATE OF CALIFORNIA

THE STATE OF CALIFORNIA OR ITS OFFICERS OR AGENTS SHALL NOT BE RESPONSIBLE FOR THE ACCURACY OR COMPLETENESS OF ELECTRONIC COPIES OF THIS PLAN SHEET.

MTS
16795 VON KARMAN AVE
SUITE 205
IRVINE, CA 92606

ORANGE COUNTY
TRANSPORTATION AUTHORITY
550 S. MAIN STREET
ORANGE, CA 92863-1584

NOTE:

1. FOR COMPLETE RIGHT OF WAY AND ACCURATE ACCESS DATA, SEE RIGHT OF WAY RECORD MAPS AT DISTRICT OFFICE.

CONSTRUCTION NOTES THIS SHEET:

2 Const PORTION OF NB Pvmt.
3 Const PORTION OF SB Pvmt.
9 Const DRAINAGE SYSTEM. SEE DRAINAGE PLANS.
11 Const WALL. SEE WALL PLANS.
12 Const PORTION OF "A-1" LINE.

CURVE DATA				
No.	R	Δ	T	L
243	2,049.00′	30°56′42"	567.18′	1,106.65′

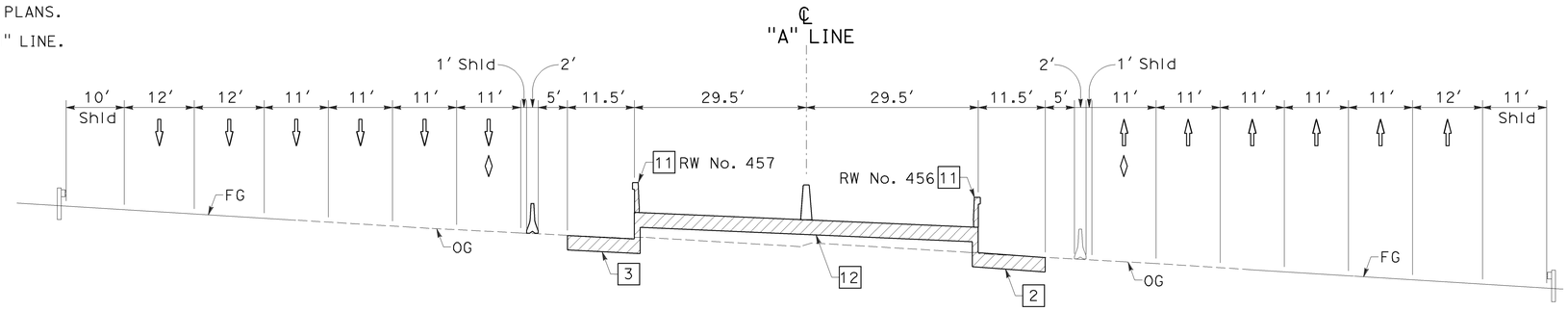

SECTION G-G
NO SCALE

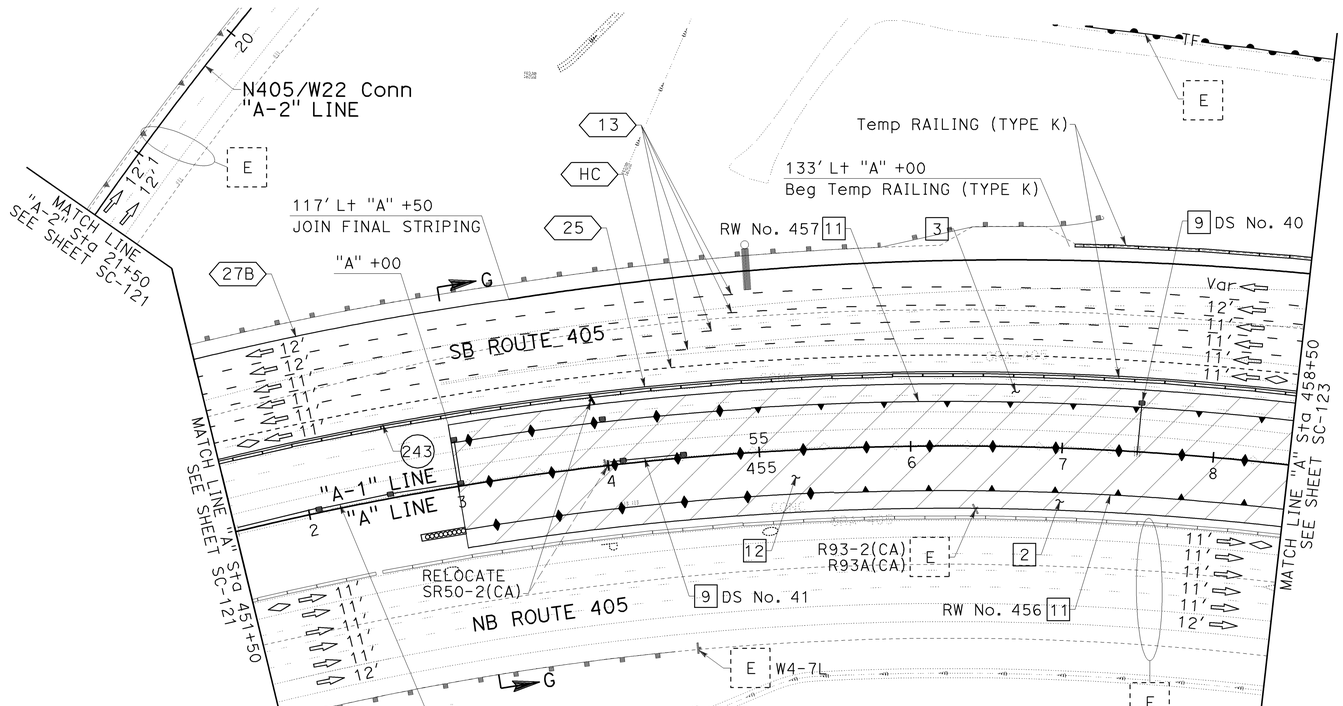

THIS PLAN ACCURATE FOR STAGE CONSTRUCTION AND TRAFFIC HANDLING WORK ONLY.

STAGE 2C.1

STAGE CONSTRUCTION AND TRAFFIC HANDLING PLAN

SCALE 1" = 50′

SC-122

LAST REVISION | DATE PLOTTED => 03-FEB-2010
08-10-09 | TIME PLOTTED => 13:47

STATE OF CALIFORNIA - DEPARTMENT OF TRANSPORTATION
Caltrans
CONSULTANT FUNCTIONAL SUPERVISOR: LEONARD SEQUEIRA
CALCULATED-DESIGNED BY: KELSIE ANDERSON
CHECKED BY: JULIET SU
REVISED BY: KLA
DATE REVISED: 12/22/09

BORDER LAST REVISED 8/1/2008 | RELATIVE BORDER SCALE IS IN INCHES 0 1 2 3 | USERNAME => trrichf DGN FILE => c07163ma122.dgn | CU 12235 | EA 071631

Dist	COUNTY	ROUTE	POST MILES TOTAL PROJECT	SHEET No.	TOTAL SHEETS
12	Ora	22,405, 605	R0.3/R0.9, 22.3/24.0,3.0/R1.6	730	1929

REGISTERED CIVIL ENGINEER — 12/22/09 DATE

2-1-10 PLANS APPROVAL DATE

JULIET SU No. C56168 Exp.12/31/10 CIVIL — REGISTERED PROFESSIONAL ENGINEER — STATE OF CALIFORNIA

THE STATE OF CALIFORNIA OR ITS OFFICERS OR AGENTS SHALL NOT BE RESPONSIBLE FOR THE ACCURACY OR COMPLETENESS OF ELECTRONIC COPIES OF THIS PLAN SHEET.

MTS
16795 VON KARMAN AVE
SUITE 205
IRVINE, CA 92606

ORANGE COUNTY
TRANSPORTATION AUTHORITY
550 S. MAIN STREET
ORANGE, CA 92863-1584

REVISED BY	DATE REVISED
KLA	12/22/09

CALCULATED-DESIGNED BY: KELSIE ANDERSON
CHECKED BY: JULIET SU
CONSULTANT FUNCTIONAL SUPERVISOR: LEONARD SEQUEIRA
STATE OF CALIFORNIA - DEPARTMENT OF TRANSPORTATION

NOTE:

1. FOR COMPLETE RIGHT OF WAY AND ACCURATE ACCESS DATA, SEE RIGHT OF WAY RECORD MAPS AT DISTRICT OFFICE.

CONSTRUCTION NOTES THIS SHEET:

9 Const DRAINAGE SYSTEM. SEE DRAINAGE PLANS.

11 Const WALL. SEE WALL PLANS.

12 Const PORTION OF "A-1" LINE.

13 Const PORTION OF Br No. 55-1098E. SEE STRUCTURE PLANS.

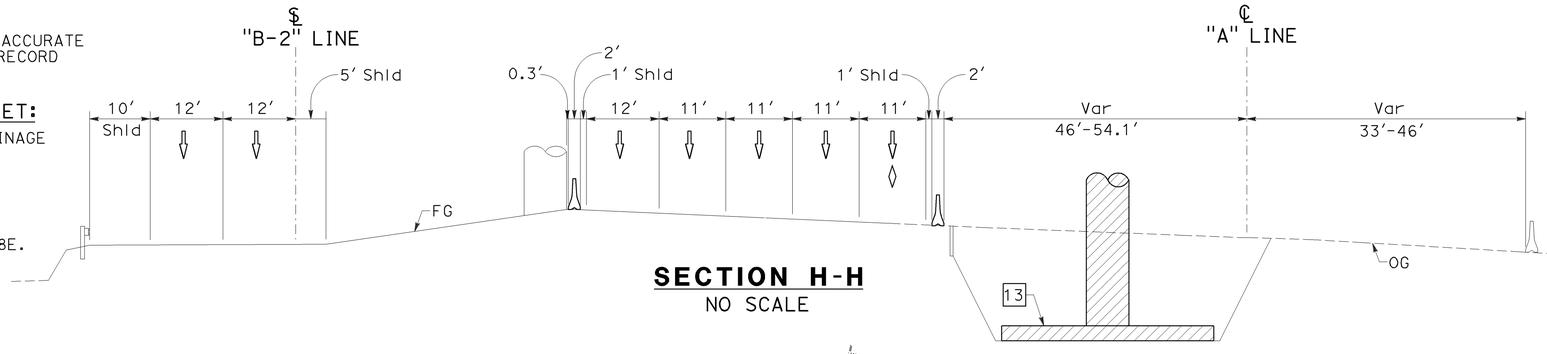

SECTION H-H
NO SCALE

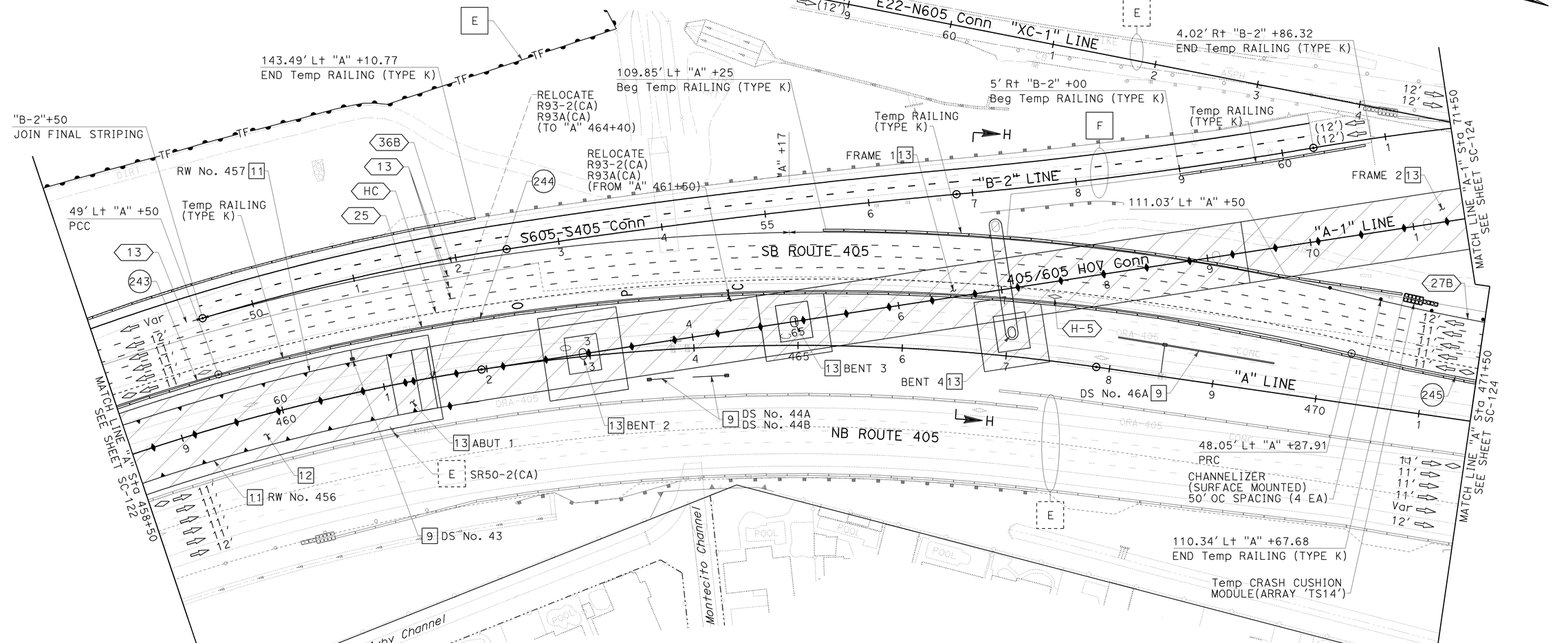

CURVE DATA				
No.	R	Δ	T	L
243	2,049.00′	30°56′42"	567.18′	1,106.65′
244	2,147.00′	29°21′9"	562.30′	1,099.90′
245	2,259.00′	3°46′57"	74.60′	149.14′

THIS PLAN ACCURATE FOR STAGE CONSTRUCTION AND TRAFFIC HANDLING WORK ONLY.

STAGE 2C.1

STAGE CONSTRUCTION AND TRAFFIC HANDLING PLAN

SCALE 1" = 50′

SC-123

LAST REVISION DATE PLOTTED => 03-FEB-2010
TIME PLOTTED => 13:47
08-10-09

BORDER LAST REVISED 8/1/2008 — RELATIVE BORDER SCALE IS IN INCHES 0 1 2 3 — USERNAME => trrichf — DGN FILE => c07163ma123.dgn — CU 12235 — EA 071631

Dist	COUNTY	ROUTE	POST MILES TOTAL PROJECT	SHEET No.	TOTAL SHEETS
12	Ora	22,405, 605	R0.3/R0.9, 22.3/24.0,3.0/R1.6	731	1929

REGISTERED CIVIL ENGINEER — 12/22/09 DATE

2-1-10
PLANS APPROVAL DATE

REGISTERED PROFESSIONAL ENGINEER — JULIET SU — No. C56168 — Exp.12/31/10 — CIVIL — STATE OF CALIFORNIA

THE STATE OF CALIFORNIA OR ITS OFFICERS OR AGENTS SHALL NOT BE RESPONSIBLE FOR THE ACCURACY OR COMPLETENESS OF ELECTRONIC COPIES OF THIS PLAN SHEET.

MTS
16795 VON KARMAN AVE
SUITE 205
IRVINE, CA 92606

ORANGE COUNTY
TRANSPORTATION AUTHORITY
550 S. MAIN STREET
ORANGE, CA 92863-1584

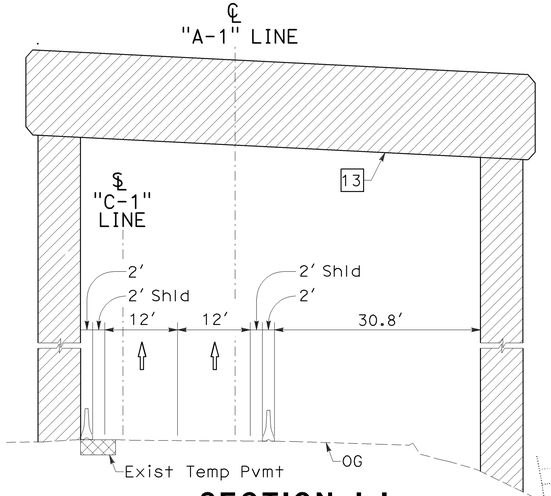

SECTION I-I
NO SCALE

NOTE:

1. FOR COMPLETE RIGHT OF WAY AND ACCURATE ACCESS DATA, SEE RIGHT OF WAY RECORD MAPS AT DISTRICT OFFICE.

CONSTRUCTION NOTES THIS SHEET:

6 CONSTRUCT Temp Pvmt. CONSECUTIVE OVERNIGHT LANE CLOSURES REQUIRED.

9 Const DRAINAGE SYSTEM. SEE DRAINAGE PLANS.

13 Const PORTION OF Br No. 55-1098E. SEE STRUCTURE PLANS.

16 REMOVE AND REUSE Exist GRATE AND PLACE BICYCLE PROOF GRATE. TACK WELD BICYCLE PROOF GRATE. WHEN NO LONGER REQUIRED FOR TEMPORARY TRAFFIC, SALVAGE BICYCLE PROOF GRATE AND REUSE Exist GRATE AT SAME LOCATION. DO NOT TACK WELD REUSED GRATE.

CURVE DATA				
No.	R	Δ	T	L
245	2,259.00′	3°46′57"	74.60′	149.14′
246	2,383.00′	16°21′44"	342.59′	680.52′
247	2,417.00′	16°26′39"	349.24′	693.69′

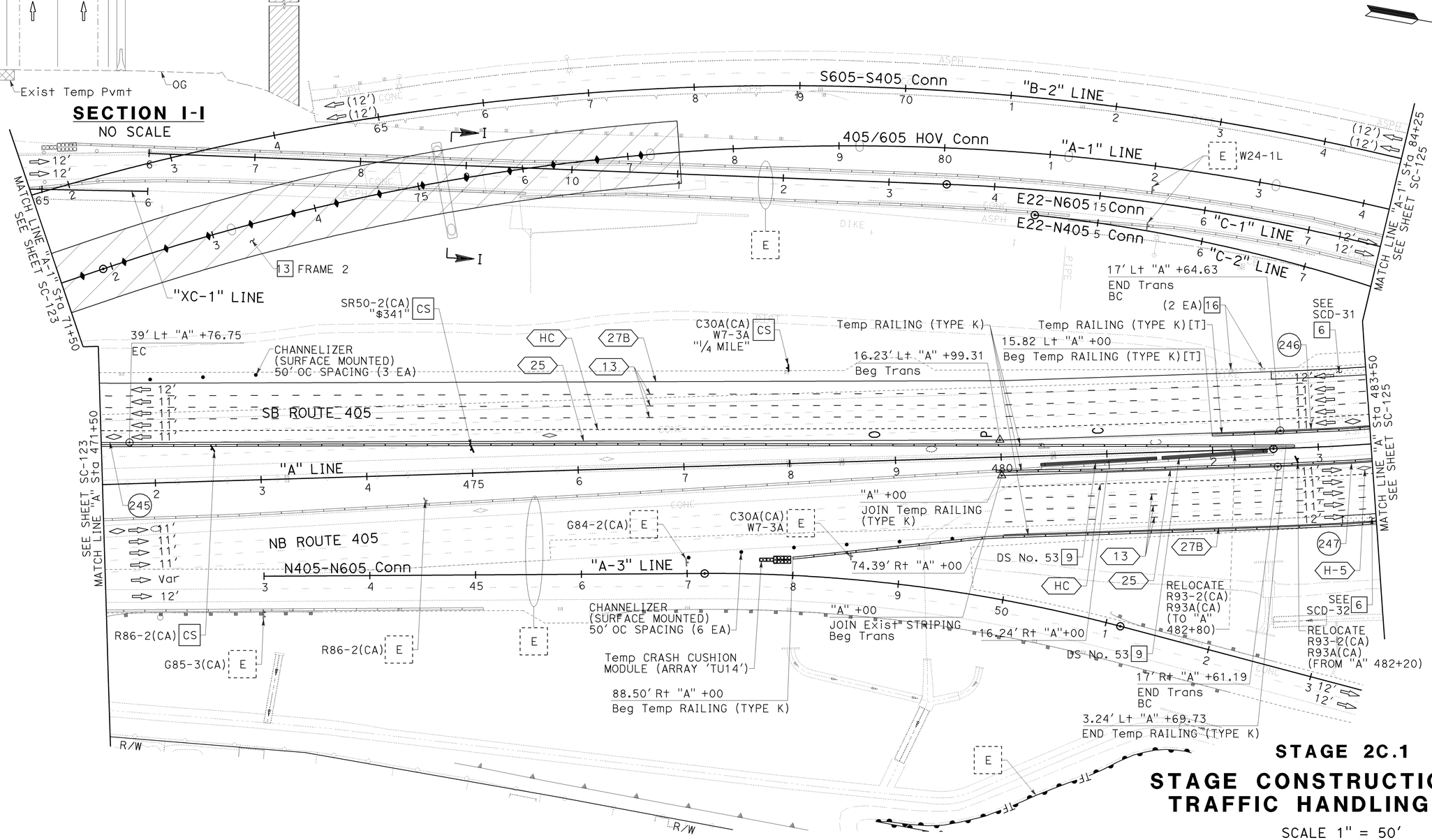

THIS PLAN ACCURATE FOR STAGE CONSTRUCTION AND TRAFFIC HANDLING WORK ONLY.

STAGE 2C.1
STAGE CONSTRUCTION AND TRAFFIC HANDLING PLAN
SCALE 1" = 50′

SC-124

LAST REVISION DATE PLOTTED => 03-FEB-2010
08-10-09 TIME PLOTTED => 13:47

STATE OF CALIFORNIA - DEPARTMENT OF TRANSPORTATION
Caltrans
CONSULTANT FUNCTIONAL SUPERVISOR: LEONARD SEQUEIRA
CALCULATED-DESIGNED BY: KELSIE ANDERSON
CHECKED BY: JULIET SU
REVISED BY: KLA
DATE REVISED: 12/22/09

BORDER LAST REVISED 8/1/2008 | RELATIVE BORDER SCALE IS IN INCHES 0 1 2 3 | USERNAME => trrichf DGN FILE => c07163ma124.dgn | CU 12235 | EA 071631

Dist	COUNTY	ROUTE	POST MILES TOTAL PROJECT	SHEET No.	TOTAL SHEETS
12	Ora	22,405, 605	R0.3/R0.9, 22.3/24.0,3.0/R1.6	732	1929

REGISTERED CIVIL ENGINEER — 12/22/09 DATE

2-1-10 PLANS APPROVAL DATE

JULIET SU No. C56168 Exp.12/31/10 CIVIL — REGISTERED PROFESSIONAL ENGINEER — STATE OF CALIFORNIA

THE STATE OF CALIFORNIA OR ITS OFFICERS OR AGENTS SHALL NOT BE RESPONSIBLE FOR THE ACCURACY OR COMPLETENESS OF ELECTRONIC COPIES OF THIS PLAN SHEET.

MTS
16795 VON KARMAN AVE
SUITE 205
IRVINE, CA 92606

ORANGE COUNTY
TRANSPORTATION AUTHORITY
550 S. MAIN STREET
ORANGE, CA 92863-1584

NOTE:

1. FOR COMPLETE RIGHT OF WAY AND ACCURATE ACCESS DATA, SEE RIGHT OF WAY RECORD MAPS AT DISTRICT OFFICE.

CONSTRUCTION NOTES THIS SHEET:

6 Const Temp Pvmt. CONSECUTIVE OVERNIGHT LANE CLOSURES REQUIRED.

14 Const PORTION OF Br No. 55-1096G. SEE STRUCTURE PLANS.

16 REMOVE AND REUSE Exist GRATE AND PLACE BICYCLE PROOF GRATE. TACK WELD BICYCLE PROOF GRATE. WHEN NO LONGER REQUIRED FOR TEMPORARY TRAFFIC, SALVAGE BICYCLE PROOF GRATE AND REUSE Exist GRATE AT SAME LOCATION. DO NOT TACK WELD REUSED GRATE.

CURVE DATA				
No.	R	Δ	T	L
246	2,383.00′	16°21′44"	342.59′	680.52′
247	2,417.00′	16°26′39"	349.24′	693.69′

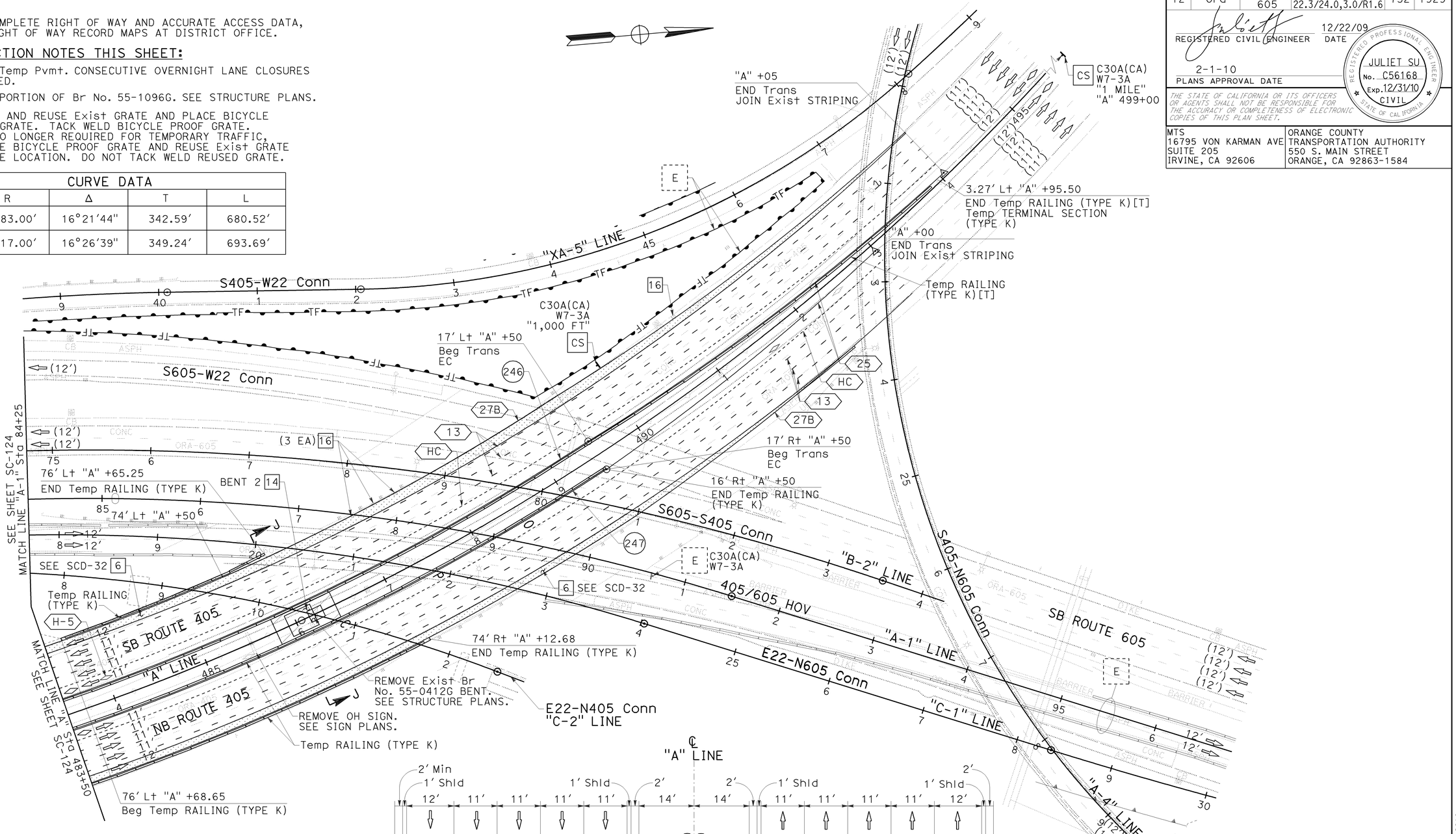

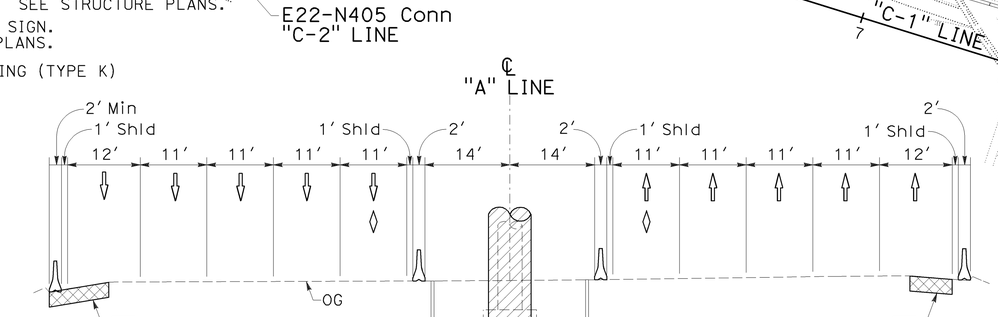

SECTION J-J
NO SCALE

THIS PLAN ACCURATE FOR STAGE CONSTRUCTION AND TRAFFIC HANDLING WORK ONLY.

STAGE 2C.1

STAGE CONSTRUCTION AND TRAFFIC HANDLING PLAN

SCALE 1" = 50′

SC-125

REVISED BY	DATE REVISED
KLA	12/22/09

CALCULATED-DESIGNED BY: KELSIE ANDERSON
CHECKED BY: JULIET SU
CONSULTANT FUNCTIONAL SUPERVISOR: LEONARD SEQUEIRA
STATE OF CALIFORNIA - DEPARTMENT OF TRANSPORTATION

LAST REVISION DATE PLOTTED => 03-FEB-2010
TIME PLOTTED => 13:47
08-10-09

BORDER LAST REVISED 8/1/2008 — RELATIVE BORDER SCALE IS IN INCHES 0 1 2 3

USERNAME => trrichf
DGN FILE => c07163ma125.dgn

CU 12235 — EA 071631

Dist	COUNTY	ROUTE	POST MILES TOTAL PROJECT	SHEET No.	TOTAL SHEETS
12	Ora	22,405, 605	R0.3/R0.9, 22.3/24.0,3.0/R1.6	733	1929

REGISTERED CIVIL ENGINEER — 12/22/09 DATE

2-1-10
PLANS APPROVAL DATE

REGISTERED PROFESSIONAL ENGINEER — JULIET SU No. C56168 Exp.12/31/10 CIVIL — STATE OF CALIFORNIA

THE STATE OF CALIFORNIA OR ITS OFFICERS OR AGENTS SHALL NOT BE RESPONSIBLE FOR THE ACCURACY OR COMPLETENESS OF ELECTRONIC COPIES OF THIS PLAN SHEET.

MTS
16795 VON KARMAN AVE
SUITE 205
IRVINE, CA 92606

ORANGE COUNTY
TRANSPORTATION AUTHORITY
550 S. MAIN STREET
ORANGE, CA 92863-1584

NOTE:

1. FOR COMPLETE RIGHT OF WAY AND ACCURATE ACCESS DATA, SEE RIGHT OF WAY RECORD MAPS AT DISTRICT OFFICE.

CONSTRUCTION NOTES THIS SHEET:

11 Const WALL. SEE WALL PLANS.

17 Const ROADWAY IMPROVEMENTS.

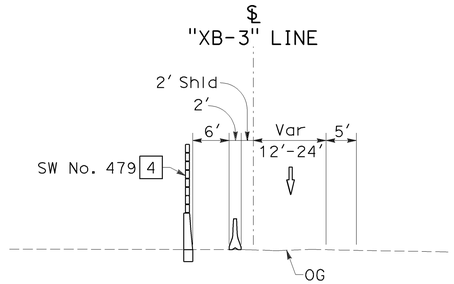

SECTION J-J
NO SCALE

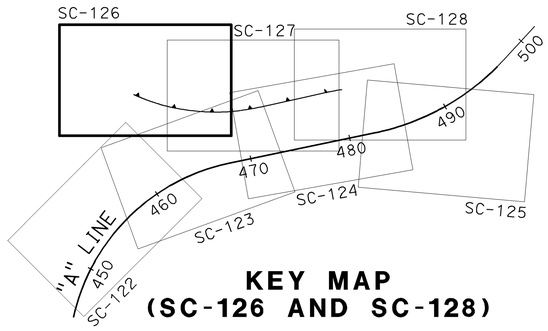

KEY MAP
(SC-126 AND SC-128)

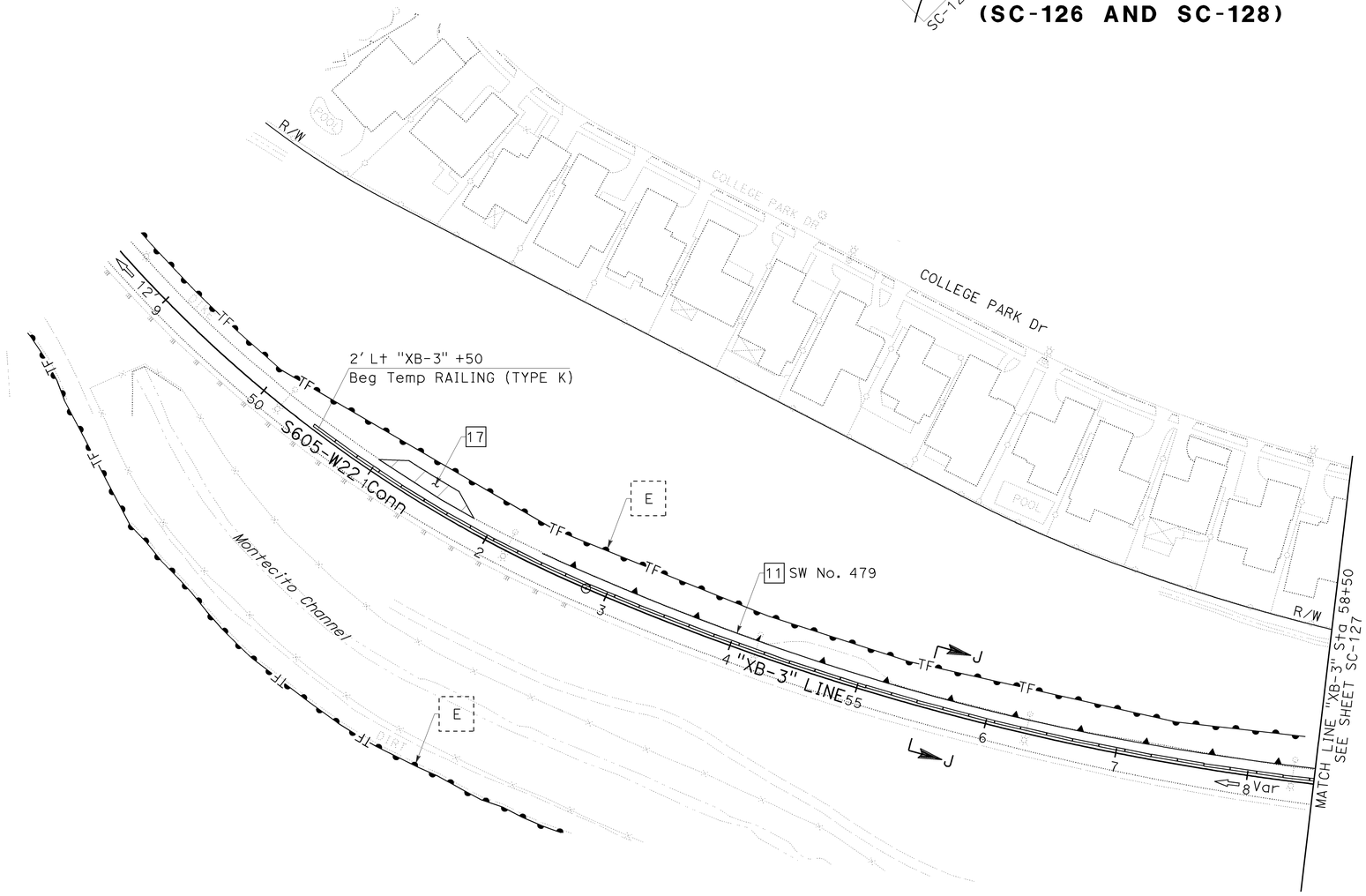

STAGE 2C.1

STAGE CONSTRUCTION AND TRAFFIC HANDLING PLAN

SCALE 1" = 50'

SC-126

THIS PLAN ACCURATE FOR STAGE CONSTRUCTION AND TRAFFIC HANDLING WORK ONLY.

CALCULATED-DESIGNED BY	CHECKED BY	REVISED BY	DATE REVISED
KELSIE ANDERSON	JULIET SU	KLA	12/22/09

STATE OF CALIFORNIA - DEPARTMENT OF TRANSPORTATION
Caltrans
CONSULTANT FUNCTIONAL SUPERVISOR: LEONARD SEQUEIRA

LAST REVISION: DATE PLOTTED => 03-FEB-2010; TIME PLOTTED => 13:48; 08-10-09

BORDER LAST REVISED 8/1/2008 | RELATIVE BORDER SCALE IS IN INCHES (0 1 2 3) | USERNAME => trrichf; DGN FILE => c07163ma126.dgn | CU 12235 | EA 071631

Dist	COUNTY	ROUTE	POST MILES TOTAL PROJECT	SHEET No.	TOTAL SHEETS
12	Ora	22,405, 605	R0.3/R0.9, 22.3/24.0,3.0/R1.6	734	1929

REGISTERED CIVIL ENGINEER — DATE 12/22/09

2-1-10
PLANS APPROVAL DATE

REGISTERED PROFESSIONAL ENGINEER
JULIET SU
No. C56168
Exp.12/31/10
CIVIL
STATE OF CALIFORNIA

THE STATE OF CALIFORNIA OR ITS OFFICERS OR AGENTS SHALL NOT BE RESPONSIBLE FOR THE ACCURACY OR COMPLETENESS OF ELECTRONIC COPIES OF THIS PLAN SHEET.

MTS
16795 VON KARMAN AVE
SUITE 205
IRVINE, CA 92606

ORANGE COUNTY
TRANSPORTATION AUTHORITY
550 S. MAIN STREET
ORANGE, CA 92863-1584

NOTE:

1. FOR COMPLETE RIGHT OF WAY AND ACCURATE ACCESS DATA, SEE RIGHT OF WAY RECORD MAPS AT DISTRICT OFFICE.

CONSTRUCTION NOTE THIS SHEET:

11 Const WALL. SEE WALL PLANS.

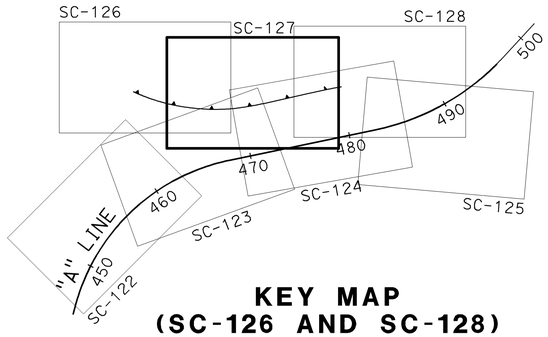

KEY MAP
(SC-126 AND SC-128)

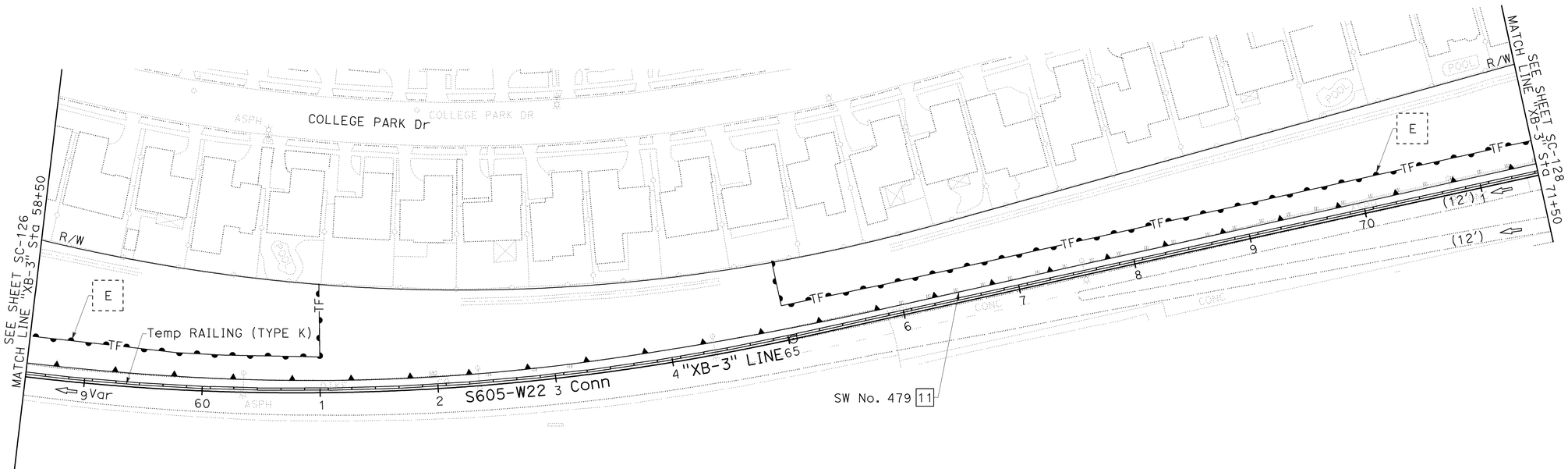

STAGE 2C.1

STAGE CONSTRUCTION AND TRAFFIC HANDLING PLAN

SCALE 1" = 50'

SC-127

THIS PLAN ACCURATE FOR STAGE CONSTRUCTION AND TRAFFIC HANDLING WORK ONLY.

CALCULATED-DESIGNED BY	CHECKED BY	REVISED BY	DATE REVISED
KELSIE ANDERSON	JULIET SU	KLA	12/22/09

CONSULTANT FUNCTIONAL SUPERVISOR: LEONARD SEQUEIRA

STATE OF CALIFORNIA - DEPARTMENT OF TRANSPORTATION

Caltrans

LAST REVISION | DATE PLOTTED => 03-FEB-2010 | 08-10-09 | TIME PLOTTED => 13:48

BORDER LAST REVISED 8/1/2008 | RELATIVE BORDER SCALE IS IN INCHES 0 1 2 3 | USERNAME => trrichf | DGN FILE => c07163ma127.dgn | CU 12235 | EA 071631

Dist	COUNTY	ROUTE	POST MILES TOTAL PROJECT	SHEET No.	TOTAL SHEETS
12	Ora	22,405, 605	R0.3/R0.9, 22.3/24.0,3.0/R1.6	735	1929

REGISTERED CIVIL ENGINEER — 12/22/09 DATE

2-1-10
PLANS APPROVAL DATE

REGISTERED PROFESSIONAL ENGINEER — JULIET SU — No. C56168 — Exp.12/31/10 — CIVIL — STATE OF CALIFORNIA

THE STATE OF CALIFORNIA OR ITS OFFICERS OR AGENTS SHALL NOT BE RESPONSIBLE FOR THE ACCURACY OR COMPLETENESS OF ELECTRONIC COPIES OF THIS PLAN SHEET.

MTS
16795 VON KARMAN AVE
SUITE 205
IRVINE, CA 92606

ORANGE COUNTY
TRANSPORTATION AUTHORITY
550 S. MAIN STREET
ORANGE, CA 92863-1584

NOTE:

1. FOR COMPLETE RIGHT OF WAY AND ACCURATE ACCESS DATA, SEE RIGHT OF WAY RECORD MAPS AT DISTRICT OFFICE.

CONSTRUCTION NOTE THIS SHEET:

11 Const WALL. SEE WALL PLANS.

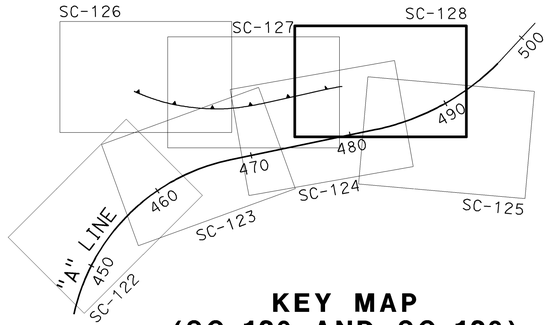

KEY MAP
(SC-126 AND SC-128)

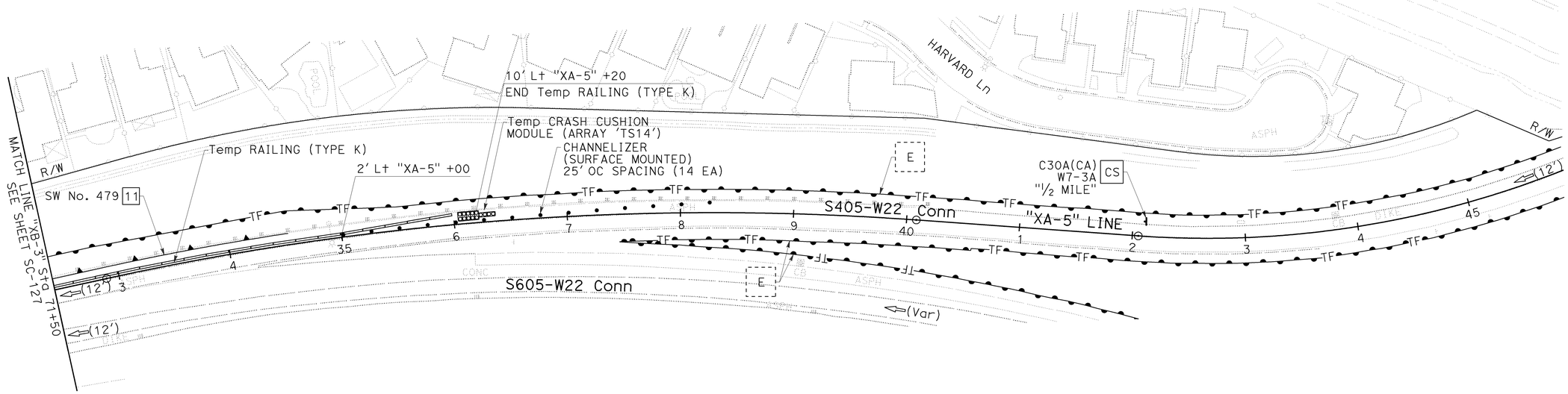

STAGE 2C.1

STAGE CONSTRUCTION AND TRAFFIC HANDLING PLAN

SCALE 1" = 50'

SC-128

THIS PLAN ACCURATE FOR STAGE CONSTRUCTION AND TRAFFIC HANDLING WORK ONLY.

LAST REVISION DATE PLOTTED => 03-FEB-2010
08-10-09 TIME PLOTTED => 13:48

STATE OF CALIFORNIA - DEPARTMENT OF TRANSPORTATION — Caltrans

CONSULTANT FUNCTIONAL SUPERVISOR: LEONARD SEQUEIRA

CALCULATED-DESIGNED BY: KELSIE ANDERSON
CHECKED BY: JULIET SU

REVISED BY: KLA — DATE REVISED: 12/22/09

BORDER LAST REVISED 8/1/2008

RELATIVE BORDER SCALE IS IN INCHES 0 1 2 3

USERNAME => trrichf
DGN FILE => c07163ma128.dgn

CU 12235

EA 071631

NOTE:

1. FOR COMPLETE RIGHT OF WAY AND ACCURATE ACCESS DATA, SEE RIGHT OF WAY RECORD MAPS AT DISTRICT OFFICE.

CURVE DATA				
No.	R	Δ	T	L
248	700.00′	10°13′46"	62.65′	124.98′
249	561.00′	18°38′19"	92.06′	182.50′

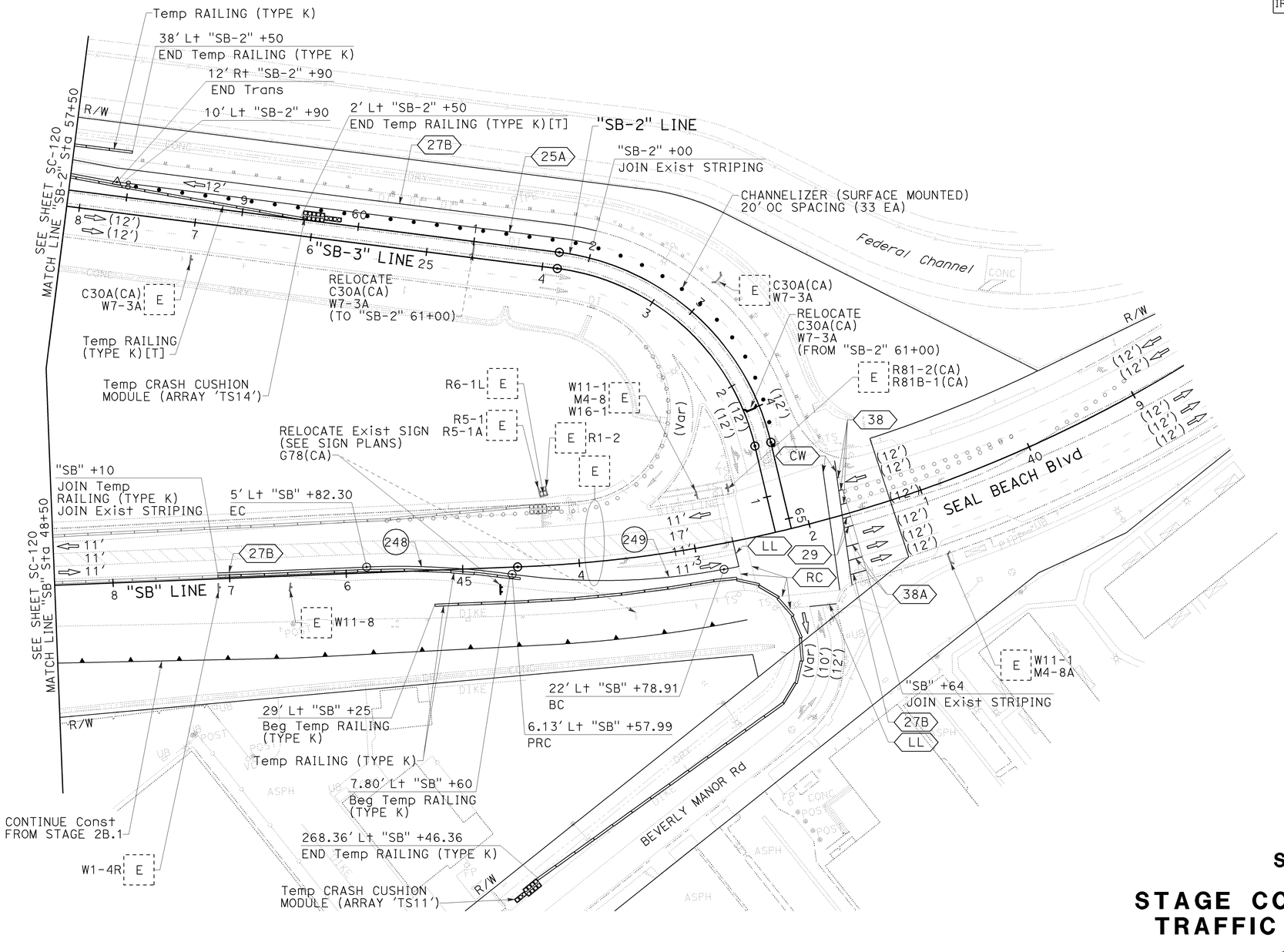

Dist	COUNTY	ROUTE	POST MILES TOTAL PROJECT	SHEET No.	TOTAL SHEETS
12	Ora	22,405, 605	R0.3/R0.9, 22.3/24.0,3.0/R1.6	736	1929

REGISTERED CIVIL ENGINEER — 12/22/09 DATE

JULIET SU No. C56168 Exp.12/31/10 CIVIL — REGISTERED PROFESSIONAL ENGINEER — STATE OF CALIFORNIA

2-1-10
PLANS APPROVAL DATE

THE STATE OF CALIFORNIA OR ITS OFFICERS OR AGENTS SHALL NOT BE RESPONSIBLE FOR THE ACCURACY OR COMPLETENESS OF ELECTRONIC COPIES OF THIS PLAN SHEET.

MTS
16795 VON KARMAN AVE
SUITE 205
IRVINE, CA 92606

ORANGE COUNTY
TRANSPORTATION AUTHORITY
550 S. MAIN STREET
ORANGE, CA 92863-1584

STAGE 2C.1

STAGE CONSTRUCTION AND TRAFFIC HANDLING PLAN

SCALE 1" = 50′

SC-129

THIS PLAN ACCURATE FOR STAGE CONSTRUCTION AND TRAFFIC HANDLING WORK ONLY.

CALCULATED-DESIGNED BY	CHECKED BY	REVISED BY	DATE REVISED
KELSIE ANDERSON	JULIET SU	KLA	12/22/09

CONSULTANT FUNCTIONAL SUPERVISOR: LEONARD SEQUEIRA

STATE OF CALIFORNIA - DEPARTMENT OF TRANSPORTATION

Caltrans

LAST REVISION: DATE PLOTTED => 03-FEB-2010 TIME PLOTTED => 13:48 08-10-09

BORDER LAST REVISED 8/1/2008 | RELATIVE BORDER SCALE IS IN INCHES 0 1 2 3 | USERNAME => trrichf DGN FILE => c07163ma129.dgn | CU 12235 | EA 071631

Dist	COUNTY	ROUTE	POST MILES TOTAL PROJECT	SHEET No.	TOTAL SHEETS
12	Ora	22,405, 605	R0.3/R0.9, 22.3/24.0,3.0/R1.6	737	1929

REGISTERED CIVIL ENGINEER 12/22/09 DATE

2-1-10
PLANS APPROVAL DATE

REGISTERED PROFESSIONAL ENGINEER JULIET SU No. C56168 Exp. 12/31/10 CIVIL STATE OF CALIFORNIA

THE STATE OF CALIFORNIA OR ITS OFFICERS OR AGENTS SHALL NOT BE RESPONSIBLE FOR THE ACCURACY OR COMPLETENESS OF ELECTRONIC COPIES OF THIS PLAN SHEET.

MTS
16795 VON KARMAN AVE
SUITE 205
IRVINE, CA 92606

ORANGE COUNTY
TRANSPORTATION AUTHORITY
550 S. MAIN STREET
ORANGE, CA 92863-1584

NOTE:

1. FOR COMPLETE RIGHT OF WAY AND ACCURATE ACCESS DATA, SEE RIGHT OF WAY RECORD MAPS AT DISTRICT OFFICE.

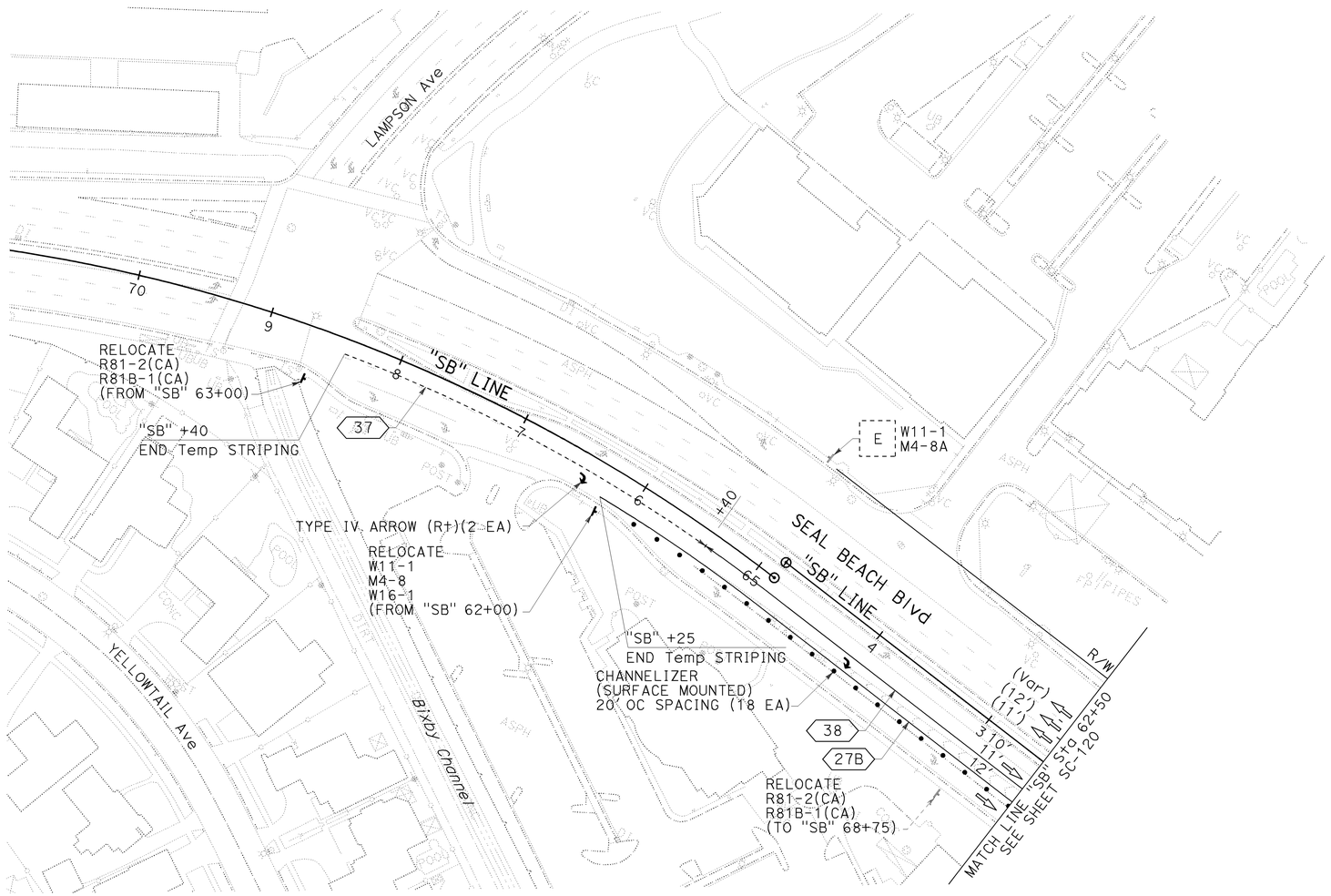

STAGE 2C.1

STAGE CONSTRUCTION AND TRAFFIC HANDLING PLAN

SCALE 1" = 50'

SC-130

THIS PLAN ACCURATE FOR STAGE CONSTRUCTION AND TRAFFIC HANDLING WORK ONLY.

STATE OF CALIFORNIA - DEPARTMENT OF TRANSPORTATION
Caltrans

CONSULTANT FUNCTIONAL SUPERVISOR: LEONARD SEQUEIRA
CALCULATED-DESIGNED BY: KELSIE ANDERSON
CHECKED BY: JULIET SU
REVISED BY: KLA
DATE REVISED: 12/22/09

LAST REVISION 08-10-09
DATE PLOTTED => 03-FEB-2010
TIME PLOTTED => 13:48

Dist	COUNTY	ROUTE	POST MILES TOTAL PROJECT	SHEET No.	TOTAL SHEETS
12	Ora	22,405, 605	R0.3/R0.9, 22.3/24.0,3.0/R1.6	738	1929

REGISTERED CIVIL ENGINEER 12/22/09 DATE

2-1-10
PLANS APPROVAL DATE

REGISTERED PROFESSIONAL ENGINEER JULIET SU No. C56168 Exp. 12/31/10 CIVIL STATE OF CALIFORNIA

THE STATE OF CALIFORNIA OR ITS OFFICERS OR AGENTS SHALL NOT BE RESPONSIBLE FOR THE ACCURACY OR COMPLETENESS OF ELECTRONIC COPIES OF THIS PLAN SHEET.

MTS
16795 VON KARMAN AVE
SUITE 205
IRVINE, CA 92606

ORANGE COUNTY
TRANSPORTATION AUTHORITY
550 S. MAIN STREET
ORANGE, CA 92863-1584

NOTE:

1. FOR COMPLETE RIGHT OF WAY AND ACCURATE ACCESS DATA, SEE RIGHT OF WAY RECORD MAPS AT DISTRICT OFFICE.

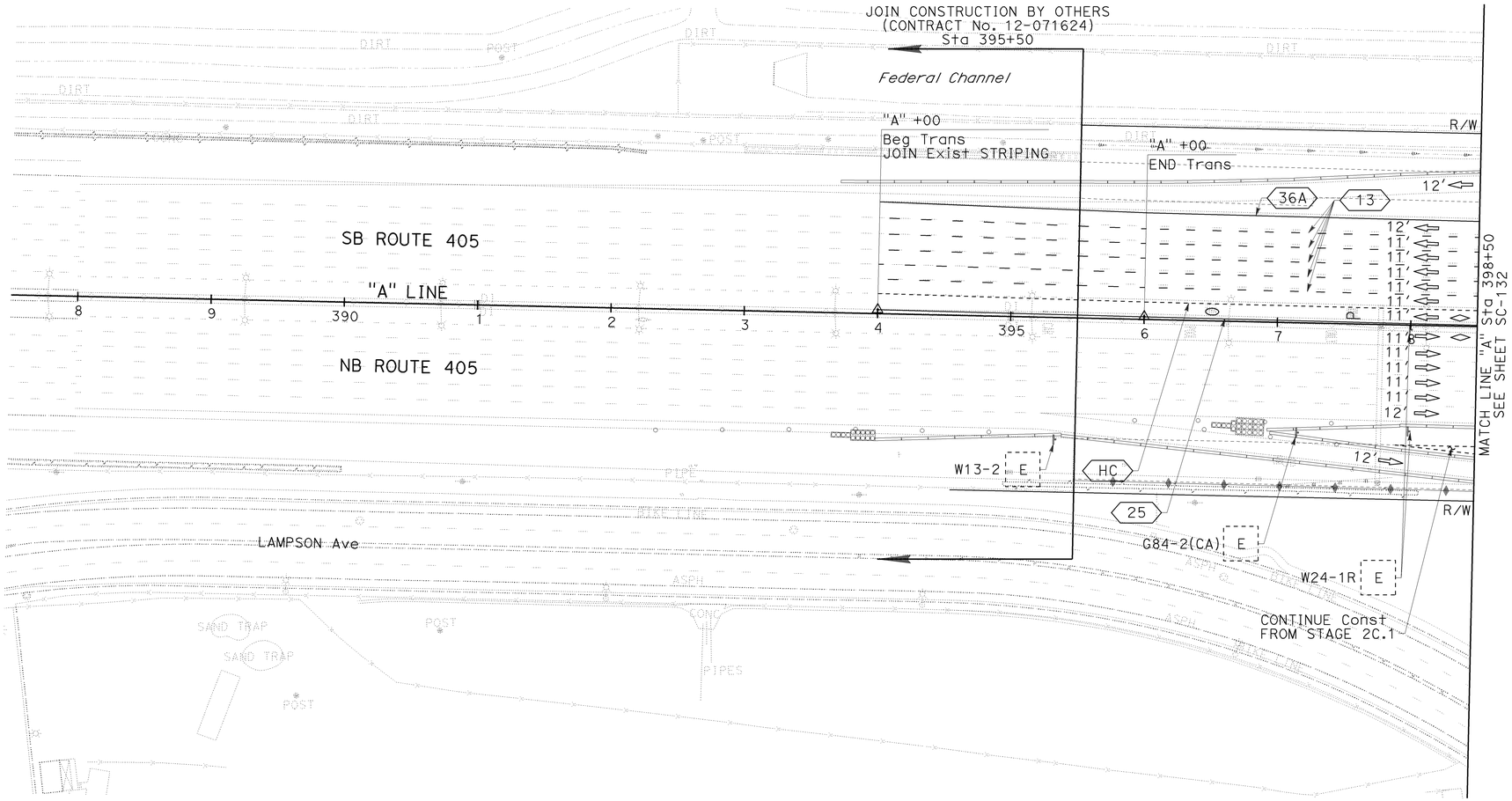

STAGE 2C.2

STAGE CONSTRUCTION AND TRAFFIC HANDLING PLAN

SCALE 1" = 50'

SC-131

THIS PLAN ACCURATE FOR STAGE CONSTRUCTION AND TRAFFIC HANDLING WORK ONLY.

STATE OF CALIFORNIA - DEPARTMENT OF TRANSPORTATION
Caltrans

CONSULTANT FUNCTIONAL SUPERVISOR: LEONARD SEQUEIRA
CALCULATED-DESIGNED BY: KELSIE ANDERSON
CHECKED BY: JULIET SU
REVISED BY: KLA
DATE REVISED: 12/22/09

LAST REVISION 08-10-09
DATE PLOTTED => 03-FEB-2010
TIME PLOTTED => 13:48

BORDER LAST REVISED 8/1/2008
RELATIVE BORDER SCALE IS IN INCHES 0 1 2 3
USERNAME => trrichf
DGN FILE => c07163ma131.dgn
CU 12235
EA 071631

Dist	COUNTY	ROUTE	POST MILES TOTAL PROJECT	SHEET No.	TOTAL SHEETS
12	Ora	22,405, 605	R0.3/R0.9, 22.3/24.0,3.0/R1.6	739	1929

REGISTERED CIVIL ENGINEER — 12/22/09 DATE

2-1-10 PLANS APPROVAL DATE

REGISTERED PROFESSIONAL ENGINEER — JULIET SU No. C56168 Exp.12/31/10 CIVIL — STATE OF CALIFORNIA

THE STATE OF CALIFORNIA OR ITS OFFICERS OR AGENTS SHALL NOT BE RESPONSIBLE FOR THE ACCURACY OR COMPLETENESS OF ELECTRONIC COPIES OF THIS PLAN SHEET.

MTS
16795 VON KARMAN AVE
SUITE 205
IRVINE, CA 92606

ORANGE COUNTY
TRANSPORTATION AUTHORITY
550 S. MAIN STREET
ORANGE, CA 92863-1584

NOTE:

1. FOR COMPLETE RIGHT OF WAY AND ACCURATE ACCESS DATA, SEE RIGHT OF WAY RECORD MAPS AT DISTRICT OFFICE.

CONSTRUCTION NOTE THIS SHEET:

[1] Const PORTION OF SB Pvmt.

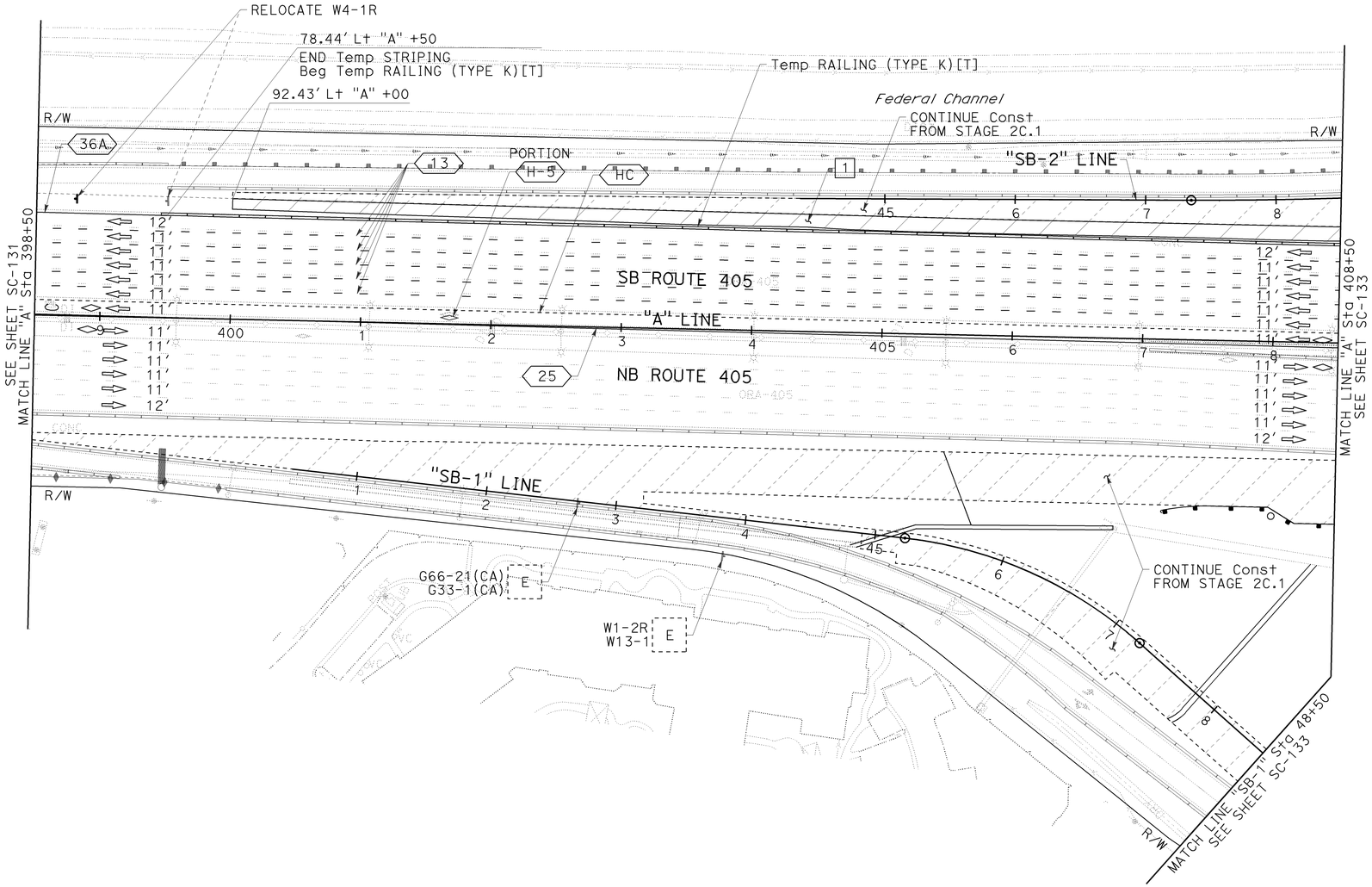

STAGE 2C.2

STAGE CONSTRUCTION AND TRAFFIC HANDLING PLAN

SCALE 1" = 50'

SC-132

THIS PLAN ACCURATE FOR STAGE CONSTRUCTION AND TRAFFIC HANDLING WORK ONLY.

REVISED BY	DATE REVISED
KLA	12/22/09

CALCULATED-DESIGNED BY	CHECKED BY
KELSIE ANDERSON	JULIET SU

CONSULTANT FUNCTIONAL SUPERVISOR: LEONARD SEQUEIRA

STATE OF CALIFORNIA - DEPARTMENT OF TRANSPORTATION — Caltrans

LAST REVISION DATE PLOTTED => 03-FEB-2010
TIME PLOTTED => 13:49
08-10-09

BORDER LAST REVISED 8/1/2008 | RELATIVE BORDER SCALE IS IN INCHES 0 1 2 3 | USERNAME => trrichf DGN FILE => c07163ma132.dgn | CU 12235 | EA 071631

Dist	COUNTY	ROUTE	POST MILES TOTAL PROJECT	SHEET No.	TOTAL SHEETS
12	Ora	22,405, 605	R0.3/R0.9, 22.3/24.0,3.0/R1.6	740	1929

REGISTERED CIVIL ENGINEER — 12/22/09 DATE

JULIET SU No. C56168 Exp.12/31/10 CIVIL — REGISTERED PROFESSIONAL ENGINEER — STATE OF CALIFORNIA

2-1-10
PLANS APPROVAL DATE

THE STATE OF CALIFORNIA OR ITS OFFICERS OR AGENTS SHALL NOT BE RESPONSIBLE FOR THE ACCURACY OR COMPLETENESS OF ELECTRONIC COPIES OF THIS PLAN SHEET.

MTS
16795 VON KARMAN AVE
SUITE 205
IRVINE, CA 92606

ORANGE COUNTY
TRANSPORTATION AUTHORITY
550 S. MAIN STREET
ORANGE, CA 92863-1584

NOTE:

1. FOR COMPLETE RIGHT OF WAY AND ACCURATE ACCESS DATA, SEE RIGHT OF WAY RECORD MAPS AT DISTRICT OFFICE.

CONSTRUCTION NOTE THIS SHEET:

1 Const PORTION OF SB Pvmt.

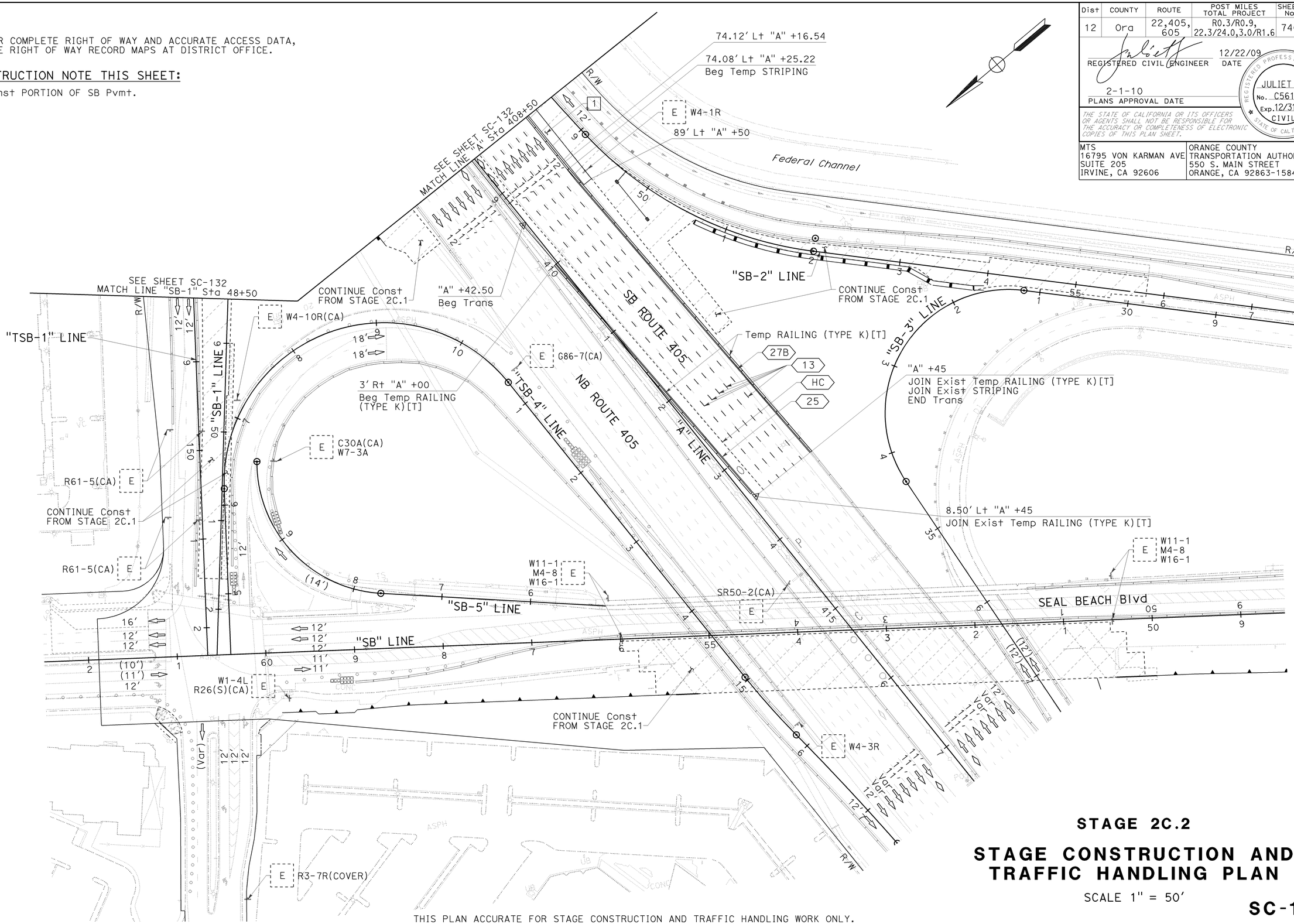

STAGE 2C.2

STAGE CONSTRUCTION AND TRAFFIC HANDLING PLAN

SCALE 1" = 50'

SC-133

THIS PLAN ACCURATE FOR STAGE CONSTRUCTION AND TRAFFIC HANDLING WORK ONLY.

REVISED BY	DATE REVISED
KLA	12/22/09

KELSIE ANDERSON — JULIET SU — CALCULATED-DESIGNED BY — CHECKED BY

CONSULTANT FUNCTIONAL SUPERVISOR: LEONARD SEQUEIRA

STATE OF CALIFORNIA - DEPARTMENT OF TRANSPORTATION — Caltrans

LAST REVISION: DATE PLOTTED => 03-FEB-2010 08-10-09 TIME PLOTTED => 13:49

BORDER LAST REVISED 8/1/2008 — RELATIVE BORDER SCALE IS IN INCHES 0 1 2 3 — USERNAME => trrichf DGN FILE => c07163ma133.dgn — CU 12235 — EA 071631

Dist	COUNTY	ROUTE	POST MILES TOTAL PROJECT	SHEET No.	TOTAL SHEETS
12	Ora	22,405, 605	R0.3/R0.9, 22.3/24.0,3.0/R1.6	741	1929

REGISTERED CIVIL ENGINEER — 12/22/09 DATE

2-1-10
PLANS APPROVAL DATE

REGISTERED PROFESSIONAL ENGINEER
JULIET SU
No. C56168
Exp.12/31/10
CIVIL
STATE OF CALIFORNIA

THE STATE OF CALIFORNIA OR ITS OFFICERS OR AGENTS SHALL NOT BE RESPONSIBLE FOR THE ACCURACY OR COMPLETENESS OF ELECTRONIC COPIES OF THIS PLAN SHEET.

MTS
16795 VON KARMAN AVE
SUITE 205
IRVINE, CA 92606

ORANGE COUNTY
TRANSPORTATION AUTHORITY
550 S. MAIN STREET
ORANGE, CA 92863-1584

NOTE:

1. FOR COMPLETE RIGHT OF WAY AND ACCURATE ACCESS DATA, SEE RIGHT OF WAY RECORD MAPS AT DISTRICT OFFICE.

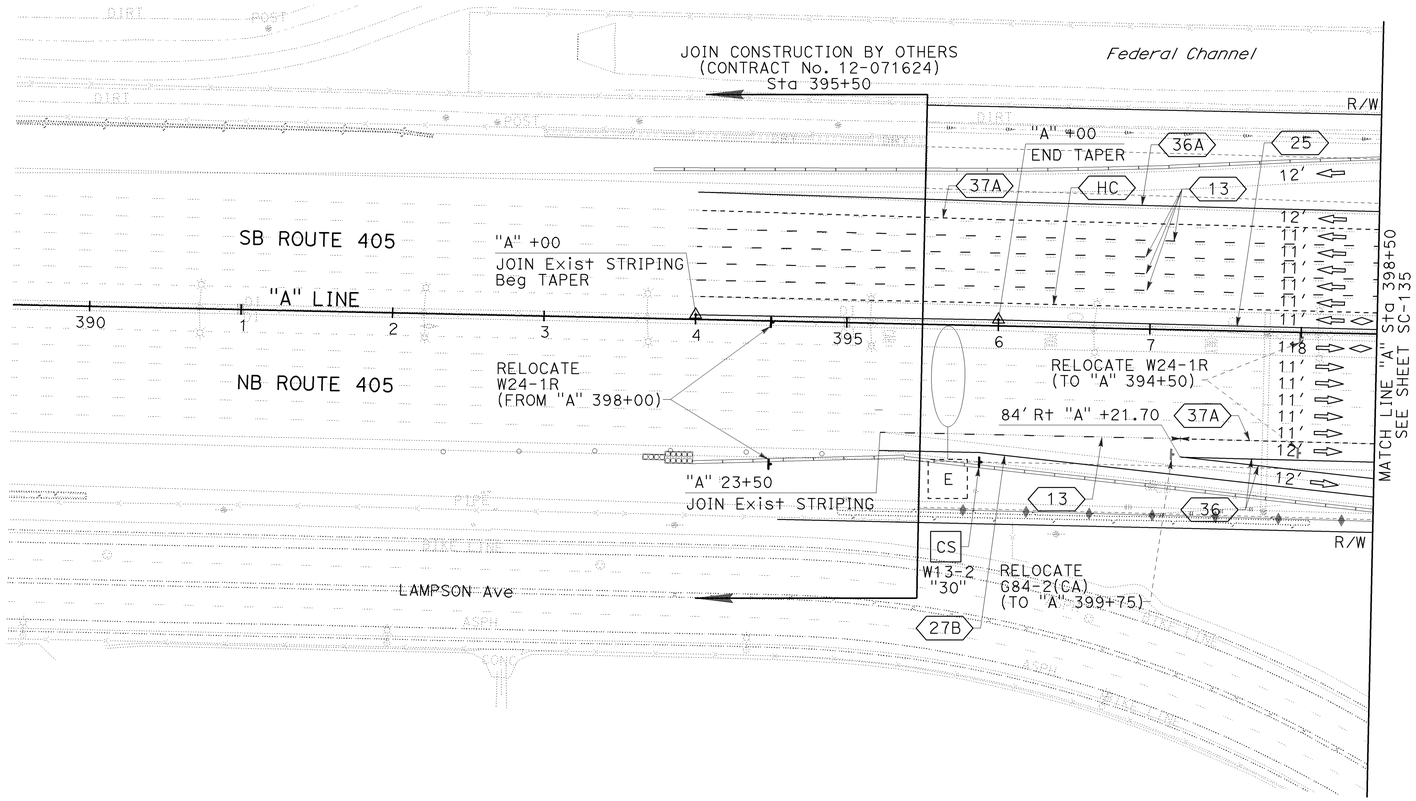

STAGE 2D.1

STAGE CONSTRUCTION AND TRAFFIC HANDLING PLAN

SCALE 1" = 50'

SC-134

THIS PLAN ACCURATE FOR STAGE CONSTRUCTION AND TRAFFIC HANDLING WORK ONLY.

CALCULATED-DESIGNED BY	CHECKED BY	REVISED BY	DATE REVISED
KELSIE ANDERSON	JULIET SU	KLA	12/22/09

CONSULTANT FUNCTIONAL SUPERVISOR: LEONARD SEQUEIRA

STATE OF CALIFORNIA - DEPARTMENT OF TRANSPORTATION

Caltrans

LAST REVISION | DATE PLOTTED => 03-FEB-2010
08-10-09 | TIME PLOTTED => 13:49

BORDER LAST REVISED 8/1/2008 | RELATIVE BORDER SCALE IS IN INCHES 0 1 2 3 | USERNAME => trrichf DGN FILE => c07163ma134.dgn | CU 12235 | EA 071631

Dist	COUNTY	ROUTE	POST MILES TOTAL PROJECT	SHEET No.	TOTAL SHEETS
12	Ora	22,405, 605	R0.3/R0.9, 22.3/24.0,3.0/R1.6	742	1929

REGISTERED CIVIL ENGINEER — 12/22/09 DATE

JULIET SU No. C56168 Exp.12/31/10 CIVIL — REGISTERED PROFESSIONAL ENGINEER — STATE OF CALIFORNIA

2-1-10
PLANS APPROVAL DATE

THE STATE OF CALIFORNIA OR ITS OFFICERS OR AGENTS SHALL NOT BE RESPONSIBLE FOR THE ACCURACY OR COMPLETENESS OF ELECTRONIC COPIES OF THIS PLAN SHEET.

MTS
16795 VON KARMAN AVE
SUITE 205
IRVINE, CA 92606

ORANGE COUNTY
TRANSPORTATION AUTHORITY
550 S. MAIN STREET
ORANGE, CA 92863-1584

NOTE:

1. FOR COMPLETE RIGHT OF WAY AND ACCURATE ACCESS DATA, SEE RIGHT OF WAY RECORD MAPS AT DISTRICT OFFICE.

CONSTRUCTION NOTES THIS SHEET:

1 Const DRAINAGE SYSTEM. SEE DRAINAGE PLANS.
2 Const PORTION OF "SB-1" LINE.
3 Const Temp Pvmt. CONSECUTIVE OVERNIGHT LANE CLOSURES REQUIRED.

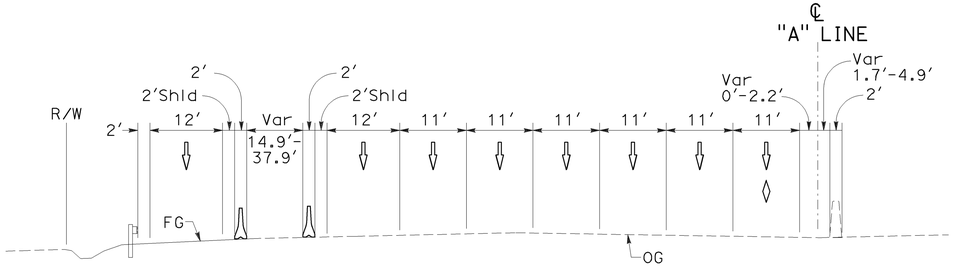

SECTION A-A
NO SCALE

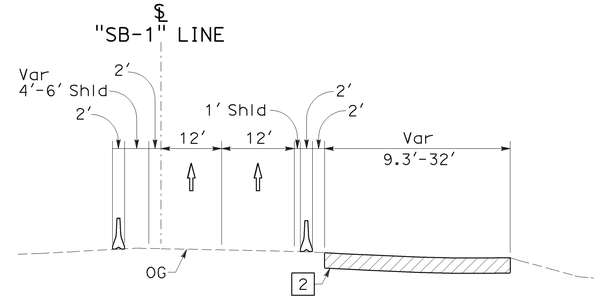

SECTION B-B
NO SCALE

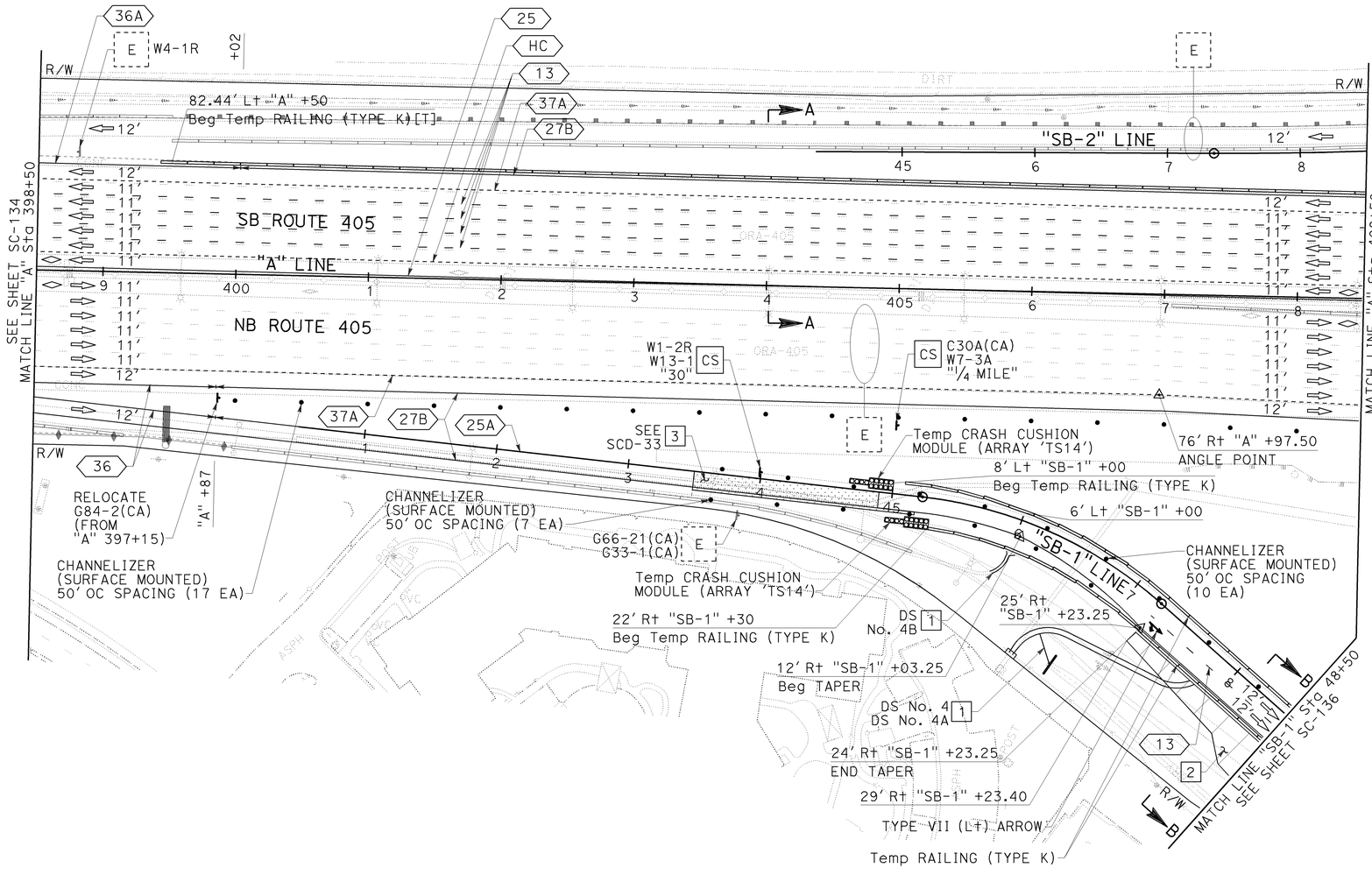

STAGE 2D.1

STAGE CONSTRUCTION AND TRAFFIC HANDLING PLAN

SCALE 1" = 50'

SC-135

THIS PLAN ACCURATE FOR STAGE CONSTRUCTION AND TRAFFIC HANDLING WORK ONLY.

STATE OF CALIFORNIA - DEPARTMENT OF TRANSPORTATION
Caltrans
CONSULTANT FUNCTIONAL SUPERVISOR: LEONARD SEQUEIRA
CALCULATED-DESIGNED BY: KELSIE ANDERSON
CHECKED BY: JULIET SU
REVISED BY: KLA
DATE REVISED: 12/22/09

LAST REVISION DATE PLOTTED => 03-FEB-2010
TIME PLOTTED => 13:49
08-10-09

BORDER LAST REVISED 8/1/2008
RELATIVE BORDER SCALE IS IN INCHES 0 1 2 3
USERNAME => trrichf
DGN FILE => c07163ma135.dgn
CU 12235
EA 071631

Dist	COUNTY	ROUTE	POST MILES TOTAL PROJECT	SHEET No.	TOTAL SHEETS
12	Ora	22,405, 605	R0.3/R0.9, 22.3/24.0,3.0/R1.6	743	1929

REGISTERED CIVIL ENGINEER — 12/22/09 DATE

2-1-10 PLANS APPROVAL DATE

REGISTERED PROFESSIONAL ENGINEER — JULIET SU No. C56168 Exp.12/31/10 CIVIL — STATE OF CALIFORNIA

THE STATE OF CALIFORNIA OR ITS OFFICERS OR AGENTS SHALL NOT BE RESPONSIBLE FOR THE ACCURACY OR COMPLETENESS OF ELECTRONIC COPIES OF THIS PLAN SHEET.

MTS
16795 VON KARMAN AVE
SUITE 205
IRVINE, CA 92606

ORANGE COUNTY
TRANSPORTATION AUTHORITY
550 S. MAIN STREET
ORANGE, CA 92863-1584

REVISED BY	DATE REVISED
KLA	12/22/09

CALCULATED-DESIGNED BY: KELSIE ANDERSON
CHECKED BY: JULIET SU
CONSULTANT FUNCTIONAL SUPERVISOR: LEONARD SEQUEIRA

STATE OF CALIFORNIA - DEPARTMENT OF TRANSPORTATION

NOTE:

1. FOR COMPLETE RIGHT OF WAY AND ACCURATE ACCESS DATA, SEE RIGHT OF WAY RECORD MAPS AT DISTRICT OFFICE.

CONSTRUCTION NOTES THIS SHEET:

1. Const DRAINAGE SYSTEM. SEE DRAINAGE PLANS.
2. Const PORTION OF "SB-1" LINE.
3. Const Temp Pvmt. CONSECUTIVE OVERNIGHT LANE CLOSURES REQUIRED.
4. Const WEST HALF OF SEAL BEACH Blvd IMPROVEMENTS.

CURVE DATA				
No.	R	Δ	T	L
250	711.00′	08°04′27"	50.18′	100.19′
251	550.00′	08°04′27"	38.82′	77.51′
252	500.00′	09°17′41"	40.64′	81.11′
253	100.00′	28°57′02"	28.82′	50.53′
254	92.00′	33°03′04"	27.30′	53.07′
255	157.00′	27°26′50"	38.34′	75.21′
256	175.00′	138°37′03"	463.34′	423.38′

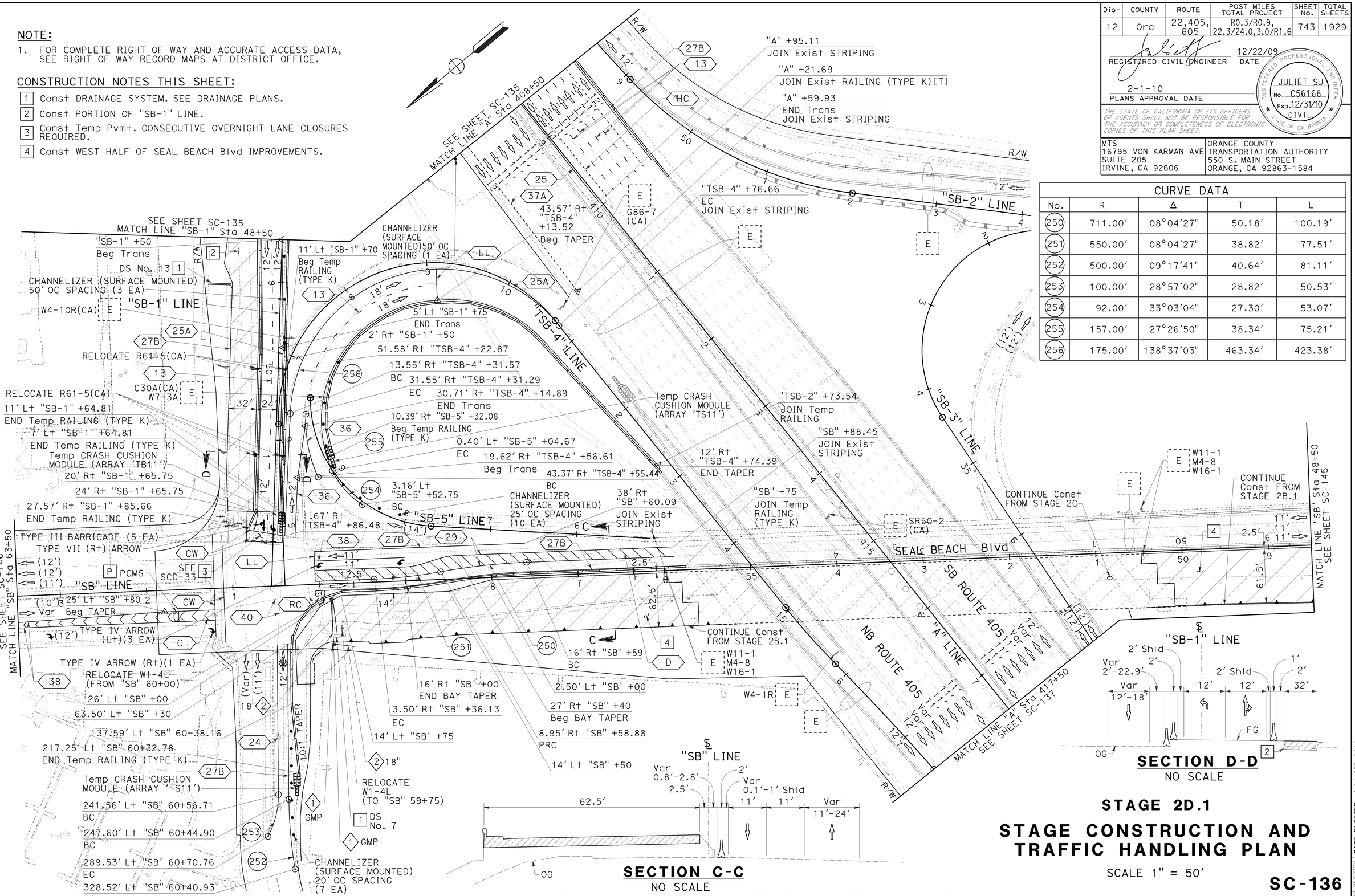

SECTION C-C
NO SCALE

SECTION D-D
NO SCALE

THIS PLAN ACCURATE FOR STAGE CONSTRUCTION AND TRAFFIC HANDLING WORK ONLY.

STAGE 2D.1

STAGE CONSTRUCTION AND TRAFFIC HANDLING PLAN

SCALE 1" = 50′

SC-136

LAST REVISION DATE PLOTTED => 04-FEB-2010
08-10-09 TIME PLOTTED => 14:33

BORDER LAST REVISED 8/1/2008

RELATIVE BORDER SCALE IS IN INCHES 0 1 2 3

USERNAME => trmnguye
DGN FILE => c07163ma136.dgn

CU 12235

EA 071631

Dist	COUNTY	ROUTE	POST MILES TOTAL PROJECT	SHEET No.	TOTAL SHEETS
12	Ora	22,405, 605	R0.3/R0.9, 22.3/24.0,3.0/R1.6	744	1929

REGISTERED CIVIL ENGINEER — 12/22/09 DATE

2-1-10
PLANS APPROVAL DATE

REGISTERED PROFESSIONAL ENGINEER
JULIET SU
No. C56168
Exp.12/31/10
CIVIL
STATE OF CALIFORNIA

THE STATE OF CALIFORNIA OR ITS OFFICERS OR AGENTS SHALL NOT BE RESPONSIBLE FOR THE ACCURACY OR COMPLETENESS OF ELECTRONIC COPIES OF THIS PLAN SHEET.

MTS
16795 VON KARMAN AVE
SUITE 205
IRVINE, CA 92606

ORANGE COUNTY
TRANSPORTATION AUTHORITY
550 S. MAIN STREET
ORANGE, CA 92863-1584

NOTE:

1. FOR COMPLETE RIGHT OF WAY AND ACCURATE ACCESS DATA, SEE RIGHT OF WAY RECORD MAPS AT DISTRICT OFFICE.

NO WORK THIS SHEET

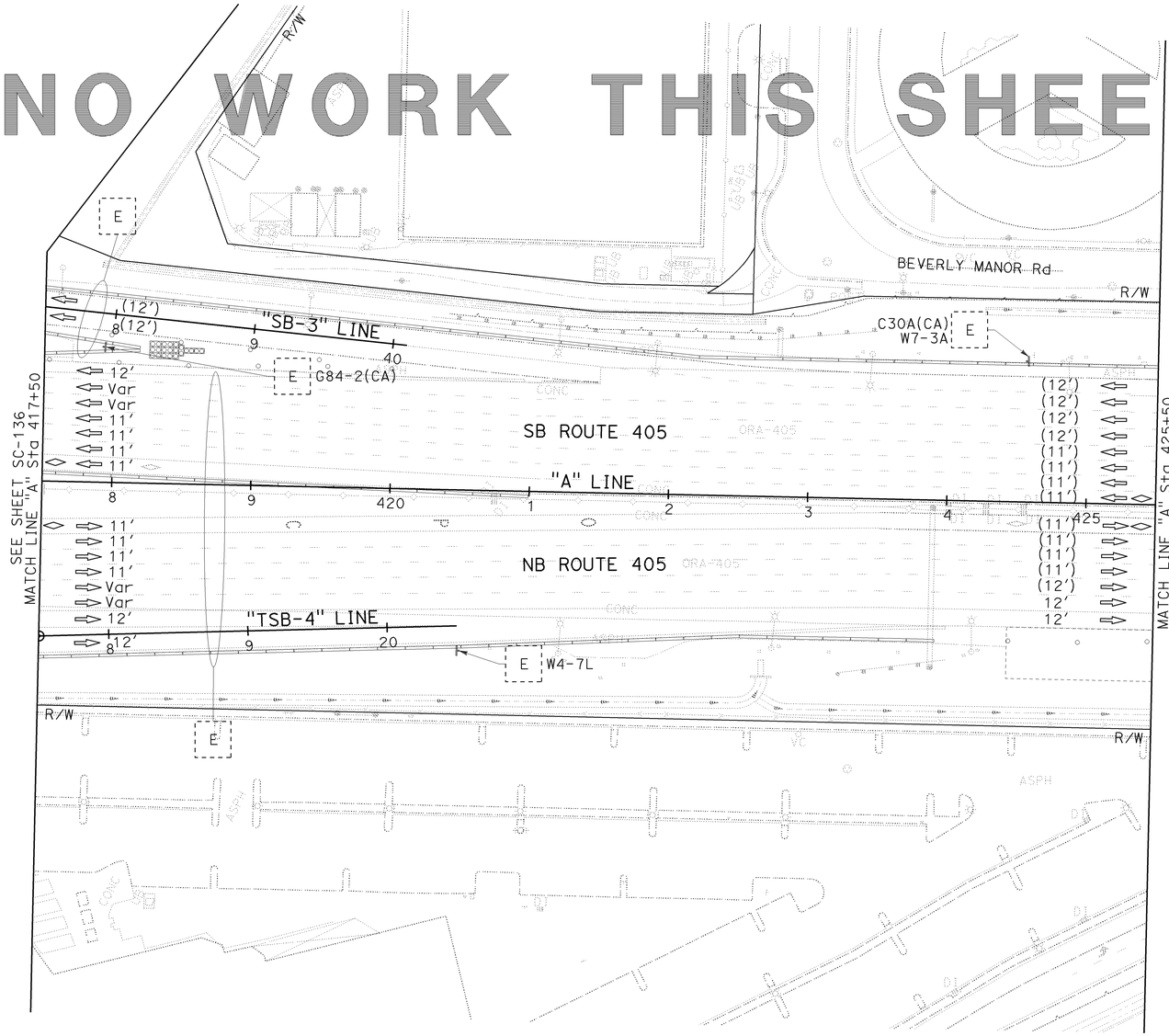

STAGE 2D.1

STAGE CONSTRUCTION AND TRAFFIC HANDLING PLAN

SCALE 1"=50'

SC-137

THIS PLAN ACCURATE FOR STAGE CONSTRUCTION AND TRAFFIC HANDLING WORK ONLY.

REVISED BY	DATE REVISED
KLA	12/22/09

CALCULATED-DESIGNED BY	CHECKED BY
KELSIE ANDERSON	JULIET SU

CONSULTANT FUNCTIONAL SUPERVISOR: LEONARD SEQUEIRA

STATE OF CALIFORNIA - DEPARTMENT OF TRANSPORTATION
Caltrans

LAST REVISION DATE PLOTTED => 03-FEB-2010
TIME PLOTTED => 13:49
08-10-09

Dist	COUNTY	ROUTE	POST MILES TOTAL PROJECT	SHEET No.	TOTAL SHEETS
12	Ora	22,405, 605	R0.3/R0.9, 22.3/24.0,3.0/R1.6	745	1929

REGISTERED CIVIL ENGINEER — 12/22/09 DATE

2-1-10
PLANS APPROVAL DATE

JULIET SU
No. C56168
Exp.12/31/10
CIVIL
REGISTERED PROFESSIONAL ENGINEER
STATE OF CALIFORNIA

THE STATE OF CALIFORNIA OR ITS OFFICERS OR AGENTS SHALL NOT BE RESPONSIBLE FOR THE ACCURACY OR COMPLETENESS OF ELECTRONIC COPIES OF THIS PLAN SHEET.

MTS
16795 VON KARMAN AVE
SUITE 205
IRVINE, CA 92606

ORANGE COUNTY
TRANSPORTATION AUTHORITY
550 S. MAIN STREET
ORANGE, CA 92863-1584

NOTE:

1. FOR COMPLETE RIGHT OF WAY AND ACCURATE ACCESS DATA, SEE RIGHT OF WAY RECORD MAPS AT DISTRICT OFFICE.

NO WORK THIS SHEET

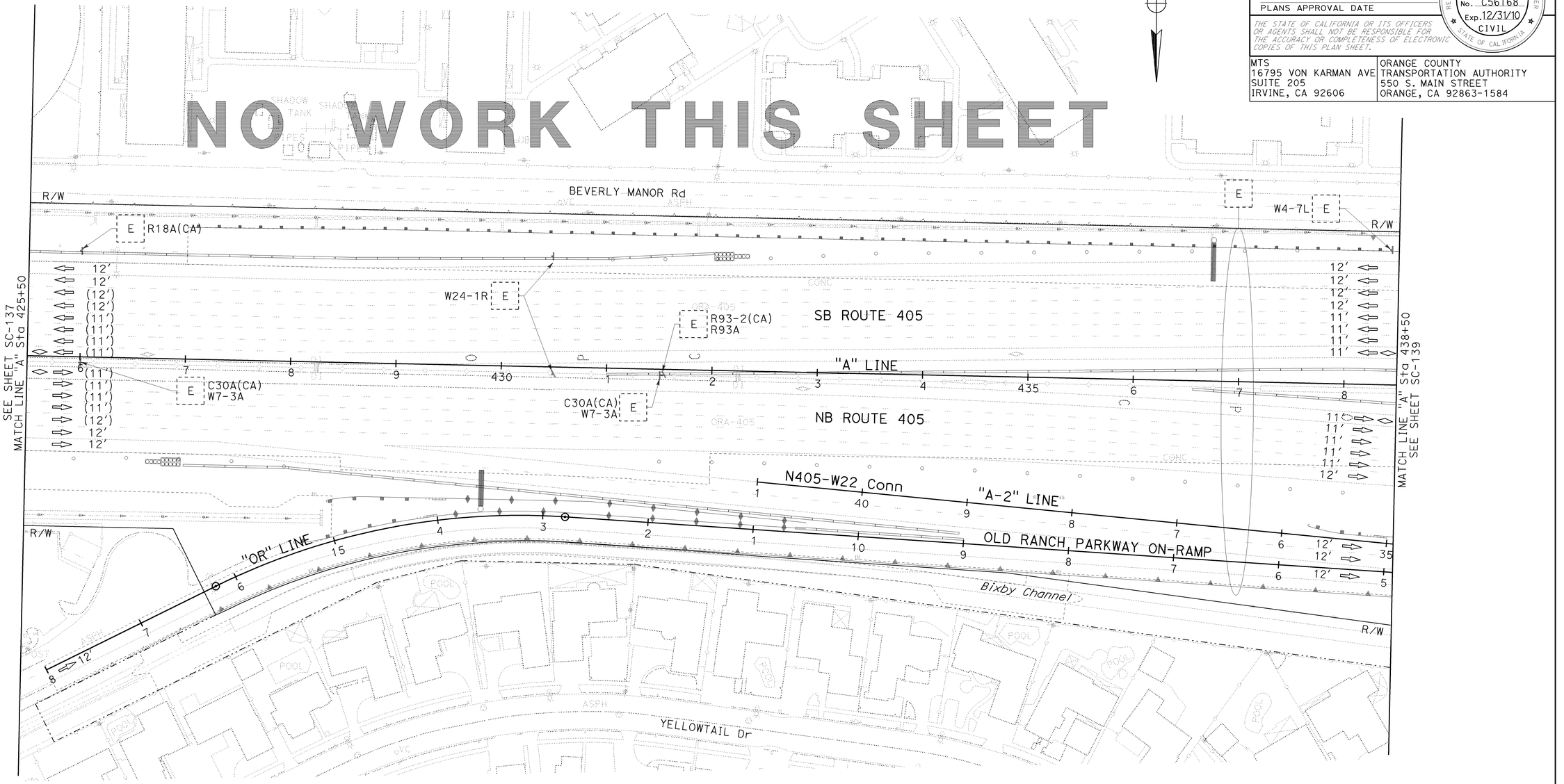

STAGE 2D.1

STAGE CONSTRUCTION AND TRAFFIC HANDLING PLAN

SCALE 1" = 50'

SC-138

THIS PLAN ACCURATE FOR STAGE CONSTRUCTION AND TRAFFIC HANDLING WORK ONLY.

REVISED BY	DATE REVISED
KLA	12/22/09

CALCULATED-DESIGNED BY: KELSIE ANDERSON
CHECKED BY: JULIET SU
CONSULTANT FUNCTIONAL SUPERVISOR: LEONARD SEQUEIRA

STATE OF CALIFORNIA - DEPARTMENT OF TRANSPORTATION
Caltrans

LAST REVISION 08-10-09
DATE PLOTTED => 03-FEB-2010
TIME PLOTTED => 13:50

BORDER LAST REVISED 8/1/2008
RELATIVE BORDER SCALE IS IN INCHES 0 1 2 3
USERNAME => trrichf
DGN FILE => c07163ma138.dgn
CU 12235
EA 071631

Dist	COUNTY	ROUTE	POST MILES TOTAL PROJECT	SHEET No.	TOTAL SHEETS
12	Ora	22,405, 605	R0.3/R0.9, 22.3/24.0,3.0/R1.6	746	1929

REGISTERED CIVIL ENGINEER 12/22/09 DATE

2-1-10
PLANS APPROVAL DATE

REGISTERED PROFESSIONAL ENGINEER JULIET SU No. C56168 Exp. 12/31/10 CIVIL STATE OF CALIFORNIA

THE STATE OF CALIFORNIA OR ITS OFFICERS OR AGENTS SHALL NOT BE RESPONSIBLE FOR THE ACCURACY OR COMPLETENESS OF ELECTRONIC COPIES OF THIS PLAN SHEET.

MTS
16795 VON KARMAN AVE
SUITE 205
IRVINE, CA 92606

ORANGE COUNTY
TRANSPORTATION AUTHORITY
550 S. MAIN STREET
ORANGE, CA 92863-1584

NOTE:

1. FOR COMPLETE RIGHT OF WAY AND ACCURATE ACCESS DATA, SEE RIGHT OF WAY RECORD MAPS AT DISTRICT OFFICE.

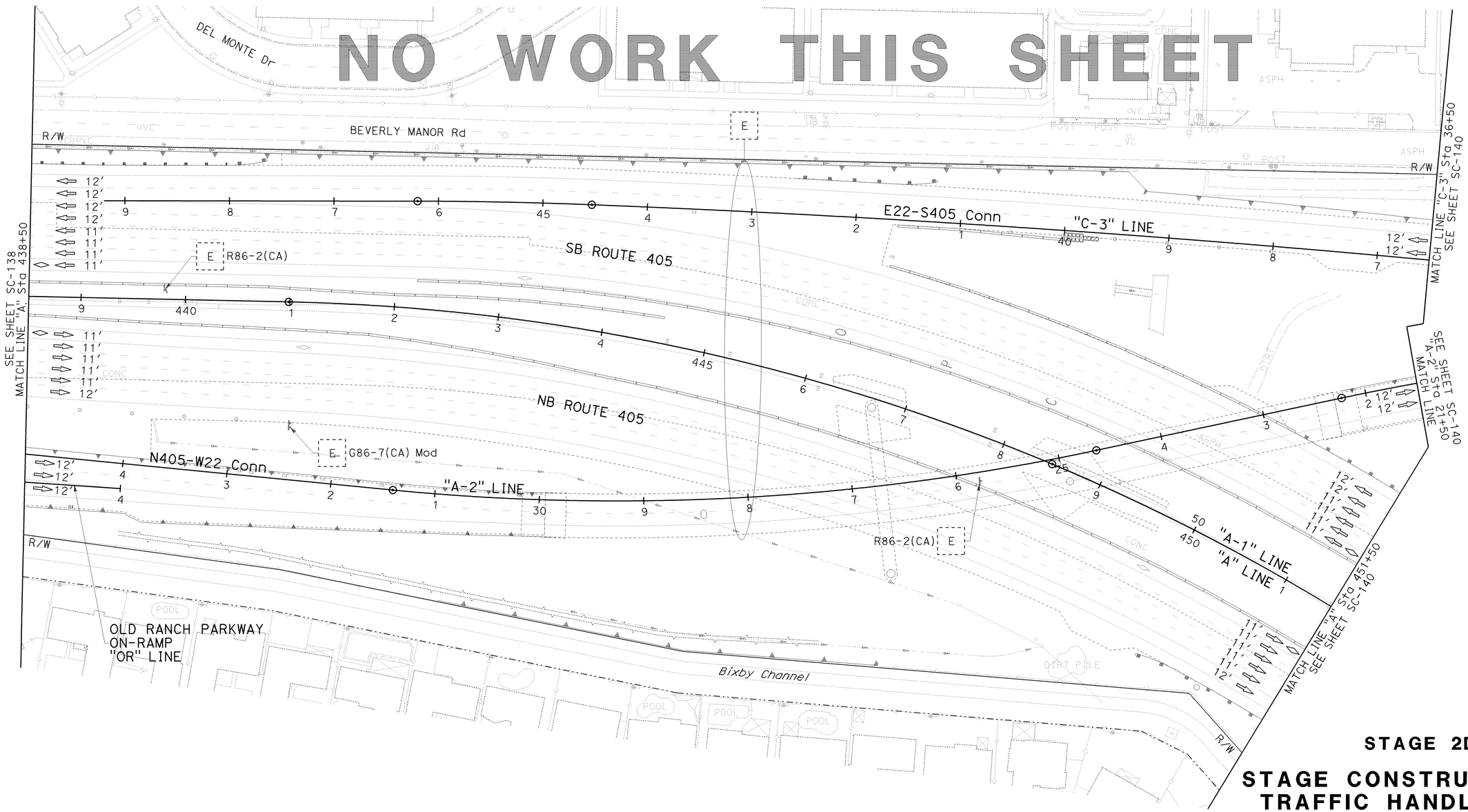
NO WORK THIS SHEET

STAGE 2D.1

STAGE CONSTRUCTION AND TRAFFIC HANDLING PLAN

SCALE 1" = 50'

SC-139

THIS PLAN ACCURATE FOR STAGE CONSTRUCTION AND TRAFFIC HANDLING WORK ONLY.

STATE OF CALIFORNIA - DEPARTMENT OF TRANSPORTATION
Caltrans

CONSULTANT FUNCTIONAL SUPERVISOR: LEONARD SEQUEIRA
CALCULATED-DESIGNED BY: KELSIE ANDERSON
CHECKED BY: JULIET SU
REVISED BY: KLA
DATE REVISED: 12/22/09

LAST REVISION 08-10-09
DATE PLOTTED => 03-FEB-2010
TIME PLOTTED => 13:50

NOTE:

1. FOR COMPLETE RIGHT OF WAY AND ACCURATE ACCESS DATA, SEE RIGHT OF WAY RECORD MAPS AT DISTRICT OFFICE.

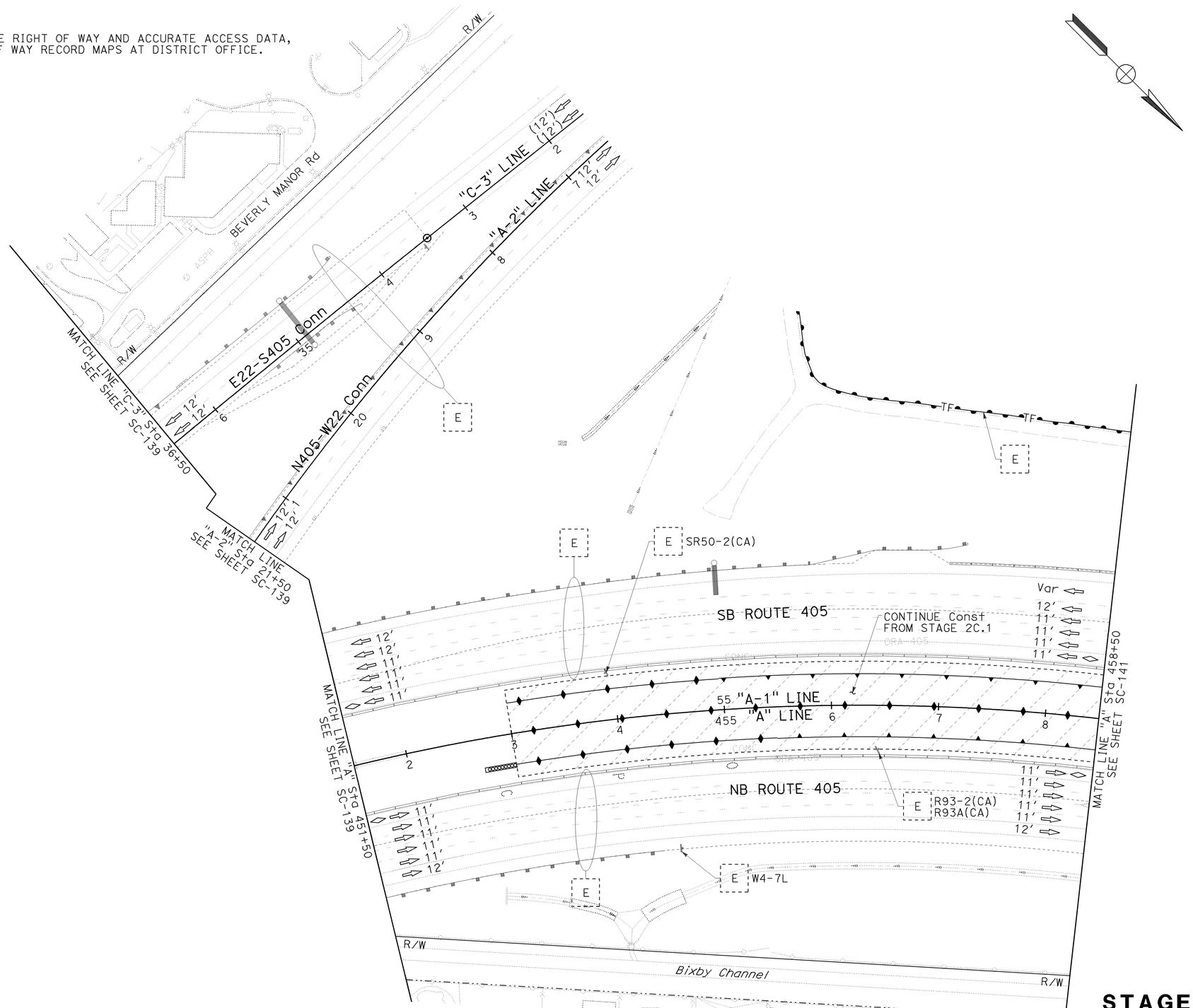

THIS PLAN ACCURATE FOR STAGE CONSTRUCTION AND TRAFFIC HANDLING WORK ONLY.

Dist	COUNTY	ROUTE	POST MILES TOTAL PROJECT	SHEET No.	TOTAL SHEETS
12	Ora	22,405, 605	R0.3/R0.9, 22.3/24.0,3.0/R1.6	747	1929

REGISTERED CIVIL ENGINEER — DATE 12/22/09

JULIET SU No. C56168 Exp.12/31/10 CIVIL — REGISTERED PROFESSIONAL ENGINEER — STATE OF CALIFORNIA

2-1-10
PLANS APPROVAL DATE

THE STATE OF CALIFORNIA OR ITS OFFICERS OR AGENTS SHALL NOT BE RESPONSIBLE FOR THE ACCURACY OR COMPLETENESS OF ELECTRONIC COPIES OF THIS PLAN SHEET.

MTS
16795 VON KARMAN AVE
SUITE 205
IRVINE, CA 92606

ORANGE COUNTY
TRANSPORTATION AUTHORITY
550 S. MAIN STREET
ORANGE, CA 92863-1584

STAGE 2D.1

STAGE CONSTRUCTION AND TRAFFIC HANDLING PLAN

SCALE 1" = 50'

SC-140

CALCULATED-DESIGNED BY	
CHECKED BY	
REVISED BY	KLA
DATE REVISED	12/22/09
KELSIE ANDERSON	
JULIET SU	
CONSULTANT FUNCTIONAL SUPERVISOR	LEONARD SEQUEIRA
STATE OF CALIFORNIA - DEPARTMENT OF TRANSPORTATION	Caltrans

LAST REVISION: DATE PLOTTED => 03-FEB-2010; TIME PLOTTED => 13:50; 08-10-09

BORDER LAST REVISED 8/1/2008 | RELATIVE BORDER SCALE IS IN INCHES 0 1 2 3 | USERNAME => trrichf; DGN FILE => c07163ma140.dgn | CU 12235 | EA 071631

Dist	COUNTY	ROUTE	POST MILES TOTAL PROJECT	SHEET No.	TOTAL SHEETS
12	Ora	22,405, 605	R0.3/R0.9, 22.3/24.0,3.0/R1.6	748	1929

REGISTERED CIVIL ENGINEER — 12/22/09 DATE

2-1-10
PLANS APPROVAL DATE

REGISTERED PROFESSIONAL ENGINEER — JULIET SU No. C56168 Exp.12/31/10 CIVIL — STATE OF CALIFORNIA

THE STATE OF CALIFORNIA OR ITS OFFICERS OR AGENTS SHALL NOT BE RESPONSIBLE FOR THE ACCURACY OR COMPLETENESS OF ELECTRONIC COPIES OF THIS PLAN SHEET.

MTS
16795 VON KARMAN AVE
SUITE 205
IRVINE, CA 92606

ORANGE COUNTY
TRANSPORTATION AUTHORITY
550 S. MAIN STREET
ORANGE, CA 92863-1584

NOTE:

1. FOR COMPLETE RIGHT OF WAY AND ACCURATE ACCESS DATA, SEE RIGHT OF WAY RECORD MAPS AT DISTRICT OFFICE.

CONSTRUCTION NOTE THIS SHEET:

5 Const PORTION OF "C-1" LINE.

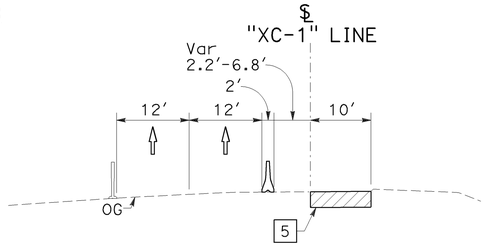

SECTION E-E
NO SCALE

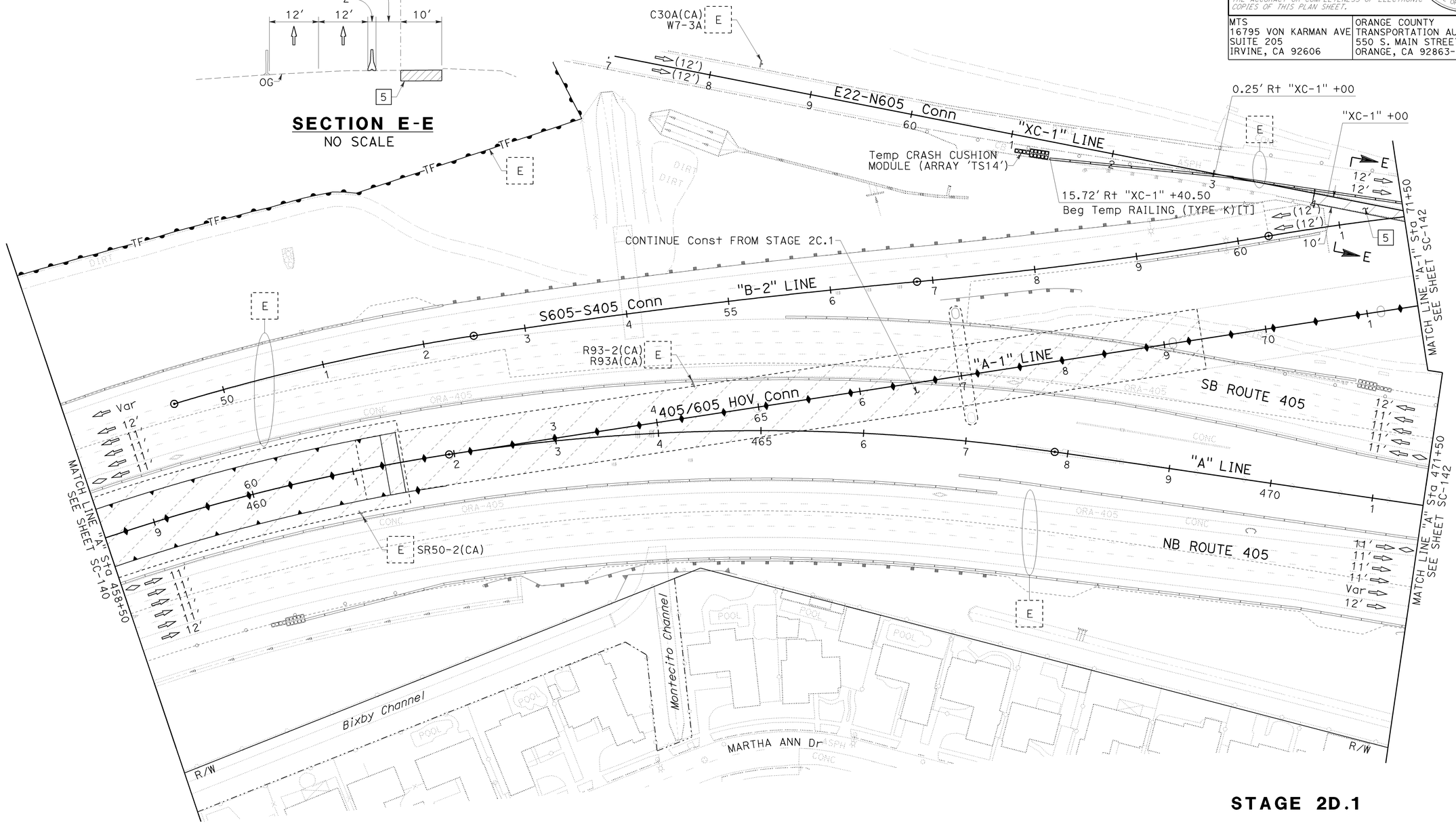

STAGE 2D.1

STAGE CONSTRUCTION AND TRAFFIC HANDLING PLAN

SCALE 1" = 50'

SC-141

THIS PLAN ACCURATE FOR STAGE CONSTRUCTION AND TRAFFIC HANDLING WORK ONLY.

STATE OF CALIFORNIA - DEPARTMENT OF TRANSPORTATION
Caltrans

CONSULTANT FUNCTIONAL SUPERVISOR: LEONARD SEQUEIRA
CALCULATED-DESIGNED BY: KELSIE ANDERSON
CHECKED BY: JULIET SU
REVISED BY: KLA
DATE REVISED: 12/22/09

LAST REVISION DATE PLOTTED => 03-FEB-2010
TIME PLOTTED => 13:50
08-10-09

BORDER LAST REVISED 8/1/2008
RELATIVE BORDER SCALE IS IN INCHES 0 1 2 3
USERNAME => trrichf
DGN FILE => c07163ma141.dgn
CU 12235
EA 071631

Dist	COUNTY	ROUTE	POST MILES TOTAL PROJECT	SHEET No.	TOTAL SHEETS
12	Ora	22,405, 605	R0.3/R0.9, 22.3/24.0,3.0/R1.6	749	1929

REGISTERED CIVIL ENGINEER — 12/22/09 DATE

2-1-10
PLANS APPROVAL DATE

JULIET SU No. C56168 Exp.12/31/10 CIVIL — REGISTERED PROFESSIONAL ENGINEER — STATE OF CALIFORNIA

THE STATE OF CALIFORNIA OR ITS OFFICERS OR AGENTS SHALL NOT BE RESPONSIBLE FOR THE ACCURACY OR COMPLETENESS OF ELECTRONIC COPIES OF THIS PLAN SHEET.

MTS
16795 VON KARMAN AVE
SUITE 205
IRVINE, CA 92606

ORANGE COUNTY
TRANSPORTATION AUTHORITY
550 S. MAIN STREET
ORANGE, CA 92863-1584

NOTE:

1. FOR COMPLETE RIGHT OF WAY AND ACCURATE ACCESS DATA, SEE RIGHT OF WAY RECORD MAPS AT DISTRICT OFFICE.

CONSTRUCTION NOTES THIS SHEET:

5 Const PORTION OF "C-1" LINE.

6 Const "C-2" LINE.

7 Const Temp Pvmt.

CURVE DATA				
No.	R	Δ	T	L
257	3,124.00′	03°44′52"	102.21′	204.35′

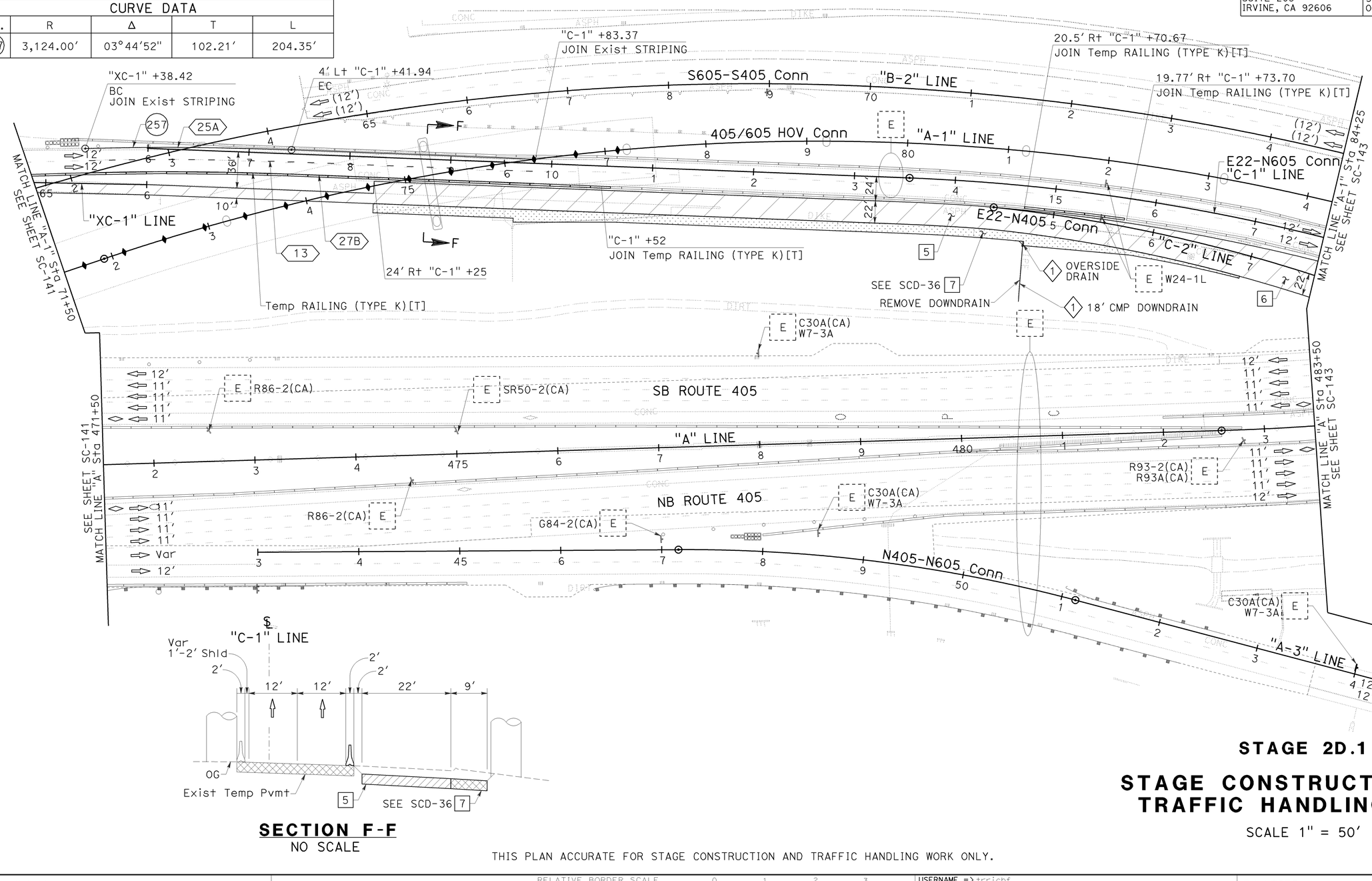

SECTION F-F
NO SCALE

THIS PLAN ACCURATE FOR STAGE CONSTRUCTION AND TRAFFIC HANDLING WORK ONLY.

STAGE 2D.1

STAGE CONSTRUCTION AND TRAFFIC HANDLING PLAN

SCALE 1" = 50′

SC-142

STATE OF CALIFORNIA - DEPARTMENT OF TRANSPORTATION — Caltrans

CONSULTANT FUNCTIONAL SUPERVISOR: LEONARD SEQUEIRA

CALCULATED-DESIGNED BY: KELSIE ANDERSON
CHECKED BY: JULIET SU

REVISED BY	DATE REVISED
KLA	12/22/09

LAST REVISION DATE PLOTTED => 03-FEB-2010
TIME PLOTTED => 13:50
08-10-09

BORDER LAST REVISED 8/1/2008 — RELATIVE BORDER SCALE IS IN INCHES 0 1 2 3 — USERNAME => trrichf — DGN FILE => c07163ma142.dgn — CU 12235 — EA 071631

Dist	COUNTY	ROUTE	POST MILES TOTAL PROJECT	SHEET No.	TOTAL SHEETS
12	Ora	22,405, 605	R0.3/R0.9, 22.3/24.0,3.0/R1.6	750	1929

REGISTERED CIVIL ENGINEER — 12/22/09 DATE

JULIET SU No. C56168 Exp.12/31/10 CIVIL — REGISTERED PROFESSIONAL ENGINEER — STATE OF CALIFORNIA

2-1-10
PLANS APPROVAL DATE

THE STATE OF CALIFORNIA OR ITS OFFICERS OR AGENTS SHALL NOT BE RESPONSIBLE FOR THE ACCURACY OR COMPLETENESS OF ELECTRONIC COPIES OF THIS PLAN SHEET.

MTS
16795 VON KARMAN AVE
SUITE 205
IRVINE, CA 92606

ORANGE COUNTY
TRANSPORTATION AUTHORITY
550 S. MAIN STREET
ORANGE, CA 92863-1584

NOTE:

1. FOR COMPLETE RIGHT OF WAY AND ACCURATE ACCESS DATA, SEE RIGHT OF WAY RECORD MAPS AT DISTRICT OFFICE.

CONSTRUCTION NOTES THIS SHEET:

6 Const "C-2" LINE.
8 Const Br No. 55-1096G. SEE STRUCTURE PLANS.
9 Const Temp Conn, "TC-1" LINE.
11 RECONSTRUCT MAINLINE ELEMENTS IMPACTED BY Br Const.

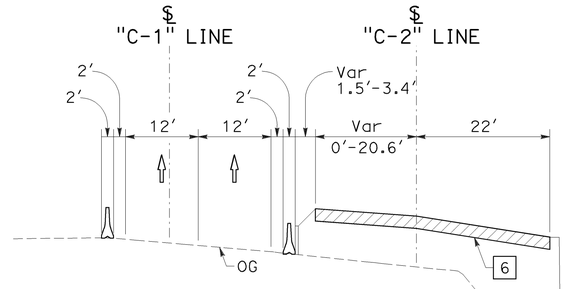

SECTION G-G
NO SCALE

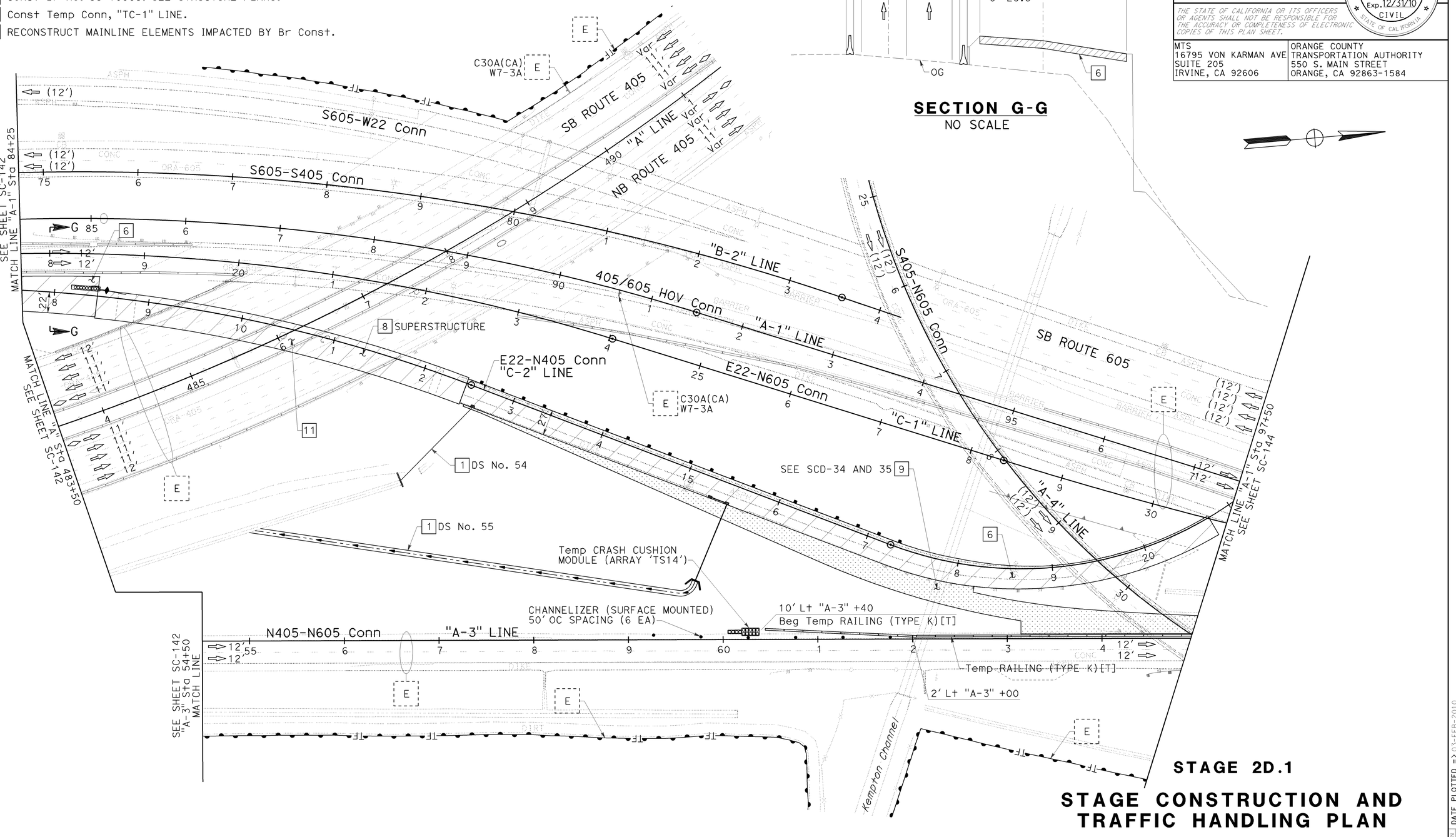

STAGE 2D.1

STAGE CONSTRUCTION AND TRAFFIC HANDLING PLAN

SCALE 1" = 50′

SC-143

THIS PLAN ACCURATE FOR STAGE CONSTRUCTION AND TRAFFIC HANDLING WORK ONLY.

STATE OF CALIFORNIA - DEPARTMENT OF TRANSPORTATION
Caltrans
CONSULTANT FUNCTIONAL SUPERVISOR: LEONARD SEQUEIRA
CALCULATED-DESIGNED BY
CHECKED BY: KELSIE ANDERSON
REVISED BY: JULIET SU
DATE REVISED: 12/22/09
KLA

LAST REVISION DATE PLOTTED => 03-FEB-2010
TIME PLOTTED => 13:50
08-10-09

BORDER LAST REVISED 8/1/2008
RELATIVE BORDER SCALE IS IN INCHES 0 1 2 3
USERNAME => trrichf
DGN FILE => c07163ma143.dgn
CU 12235
EA 071631

Dist	COUNTY	ROUTE	POST MILES TOTAL PROJECT	SHEET No.	TOTAL SHEETS
12	Ora	22,405, 605	R0.3/R0.9, 22.3/24.0,3.0/R1.6	751	1929

REGISTERED CIVIL ENGINEER — 12/22/09 DATE

2-1-10
PLANS APPROVAL DATE

REGISTERED PROFESSIONAL ENGINEER
JULIET SU
No. C56168
Exp.12/31/10
CIVIL
STATE OF CALIFORNIA

THE STATE OF CALIFORNIA OR ITS OFFICERS OR AGENTS SHALL NOT BE RESPONSIBLE FOR THE ACCURACY OR COMPLETENESS OF ELECTRONIC COPIES OF THIS PLAN SHEET.

MTS
16795 VON KARMAN AVE
SUITE 205
IRVINE, CA 92606

ORANGE COUNTY
TRANSPORTATION AUTHORITY
550 S. MAIN STREET
ORANGE, CA 92863-1584

NOTE:

1. FOR COMPLETE RIGHT OF WAY AND ACCURATE ACCESS DATA, SEE RIGHT OF WAY RECORD MAPS AT DISTRICT OFFICE.

CONSTRUCTION NOTE THIS SHEET:

9 Const Temp Conn, "TC-1" LINE.

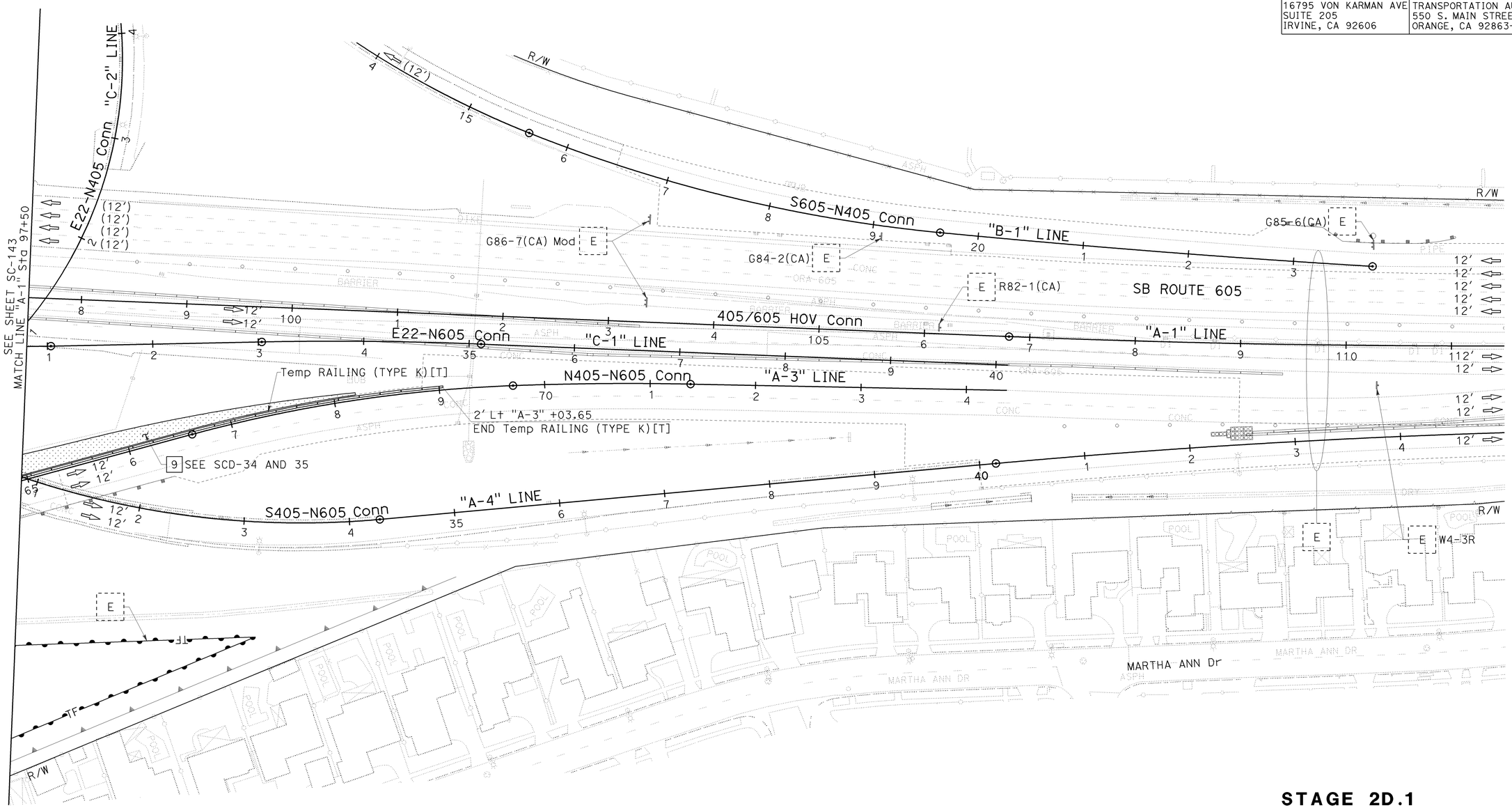

STAGE 2D.1

STAGE CONSTRUCTION AND TRAFFIC HANDLING PLAN

SCALE 1" = 50′

SC-144

THIS PLAN ACCURATE FOR STAGE CONSTRUCTION AND TRAFFIC HANDLING WORK ONLY.

REVISED BY	DATE REVISED
KLA	12/22/09

KELSIE ANDERSON — CALCULATED-DESIGNED BY
JULIET SU — CHECKED BY
LEONARD SEQUEIRA — CONSULTANT FUNCTIONAL SUPERVISOR
STATE OF CALIFORNIA - DEPARTMENT OF TRANSPORTATION
Caltrans

LAST REVISION | DATE PLOTTED => 03-FEB-2010 | 08-10-09 | TIME PLOTTED => 13:50

BORDER LAST REVISED 8/1/2008 | RELATIVE BORDER SCALE IS IN INCHES 0 1 2 3 | USERNAME => trrichf | DGN FILE => c07163ma144.dgn | CU 12235 | EA 071631

Dist	COUNTY	ROUTE	POST MILES TOTAL PROJECT	SHEET No.	TOTAL SHEETS
12	Ora	22,405, 605	R0.3/R0.9, 22.3/24.0,3.0/R1.6	752	1929

REGISTERED CIVIL ENGINEER — 12/22/09 DATE

2-1-10
PLANS APPROVAL DATE

REGISTERED PROFESSIONAL ENGINEER — JULIET SU — No. C56168 — Exp.12/31/10 — CIVIL — STATE OF CALIFORNIA

THE STATE OF CALIFORNIA OR ITS OFFICERS OR AGENTS SHALL NOT BE RESPONSIBLE FOR THE ACCURACY OR COMPLETENESS OF ELECTRONIC COPIES OF THIS PLAN SHEET.

MTS
16795 VON KARMAN AVE
SUITE 205
IRVINE, CA 92606

ORANGE COUNTY
TRANSPORTATION AUTHORITY
550 S. MAIN STREET
ORANGE, CA 92863-1584

NOTE:

1. FOR COMPLETE RIGHT OF WAY AND ACCURATE ACCESS DATA, SEE RIGHT OF WAY RECORD MAPS AT DISTRICT OFFICE.

CONSTRUCTION NOTES THIS SHEET:

1 Const DRAINAGE SYSTEM. SEE DRAINAGE PLANS.

4 Const WEST HALF OF SEAL BEACH Blvd IMPROVEMENTS.

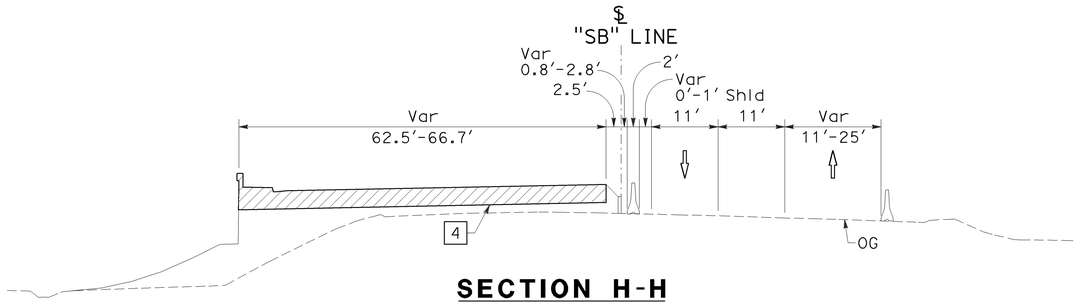

SECTION H-H
NO SCALE

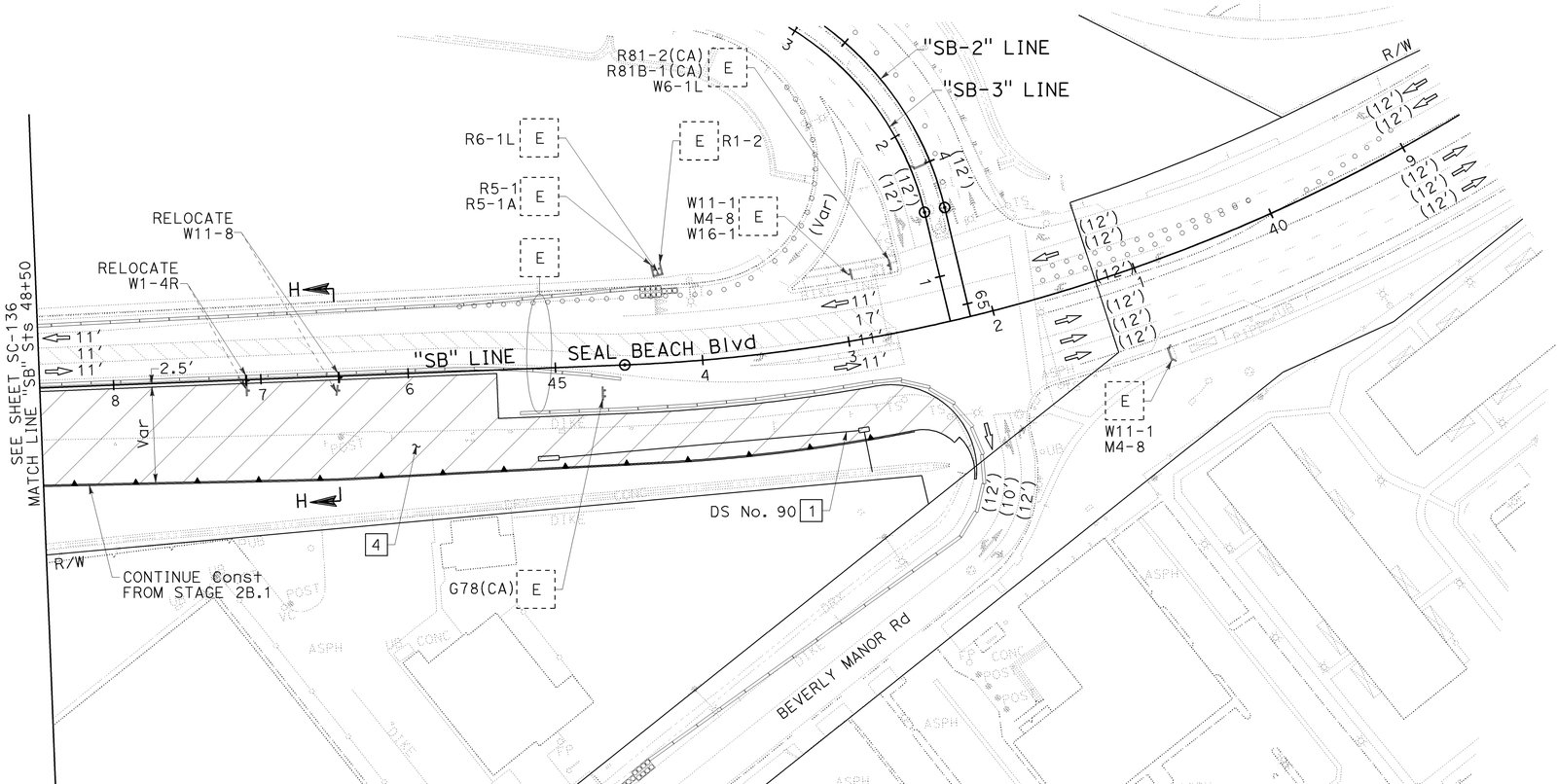

STAGE 2D.1

STAGE CONSTRUCTION AND TRAFFIC HANDLING PLAN

SCALE 1" = 50'

SC-145

THIS PLAN ACCURATE FOR STAGE CONSTRUCTION AND TRAFFIC HANDLING WORK ONLY.

CALCULATED-DESIGNED BY	CHECKED BY	REVISED BY	DATE REVISED
KELSIE ANDERSON	JULIET SU	KLA	12/22/09

CONSULTANT FUNCTIONAL SUPERVISOR: LEONARD SEQUEIRA

STATE OF CALIFORNIA - DEPARTMENT OF TRANSPORTATION

Caltrans

LAST REVISION DATE PLOTTED => 03-FEB-2010
TIME PLOTTED => 13:51
08-10-09

BORDER LAST REVISED 8/1/2008 | RELATIVE BORDER SCALE IS IN INCHES 0 1 2 3 | USERNAME => trrichf | DGN FILE => c07163ma145.dgn | CU 12235 | EA 071631

Dist	COUNTY	ROUTE	POST MILES TOTAL PROJECT	SHEET No.	TOTAL SHEETS
12	Ora	22,405, 605	R0.3/R0.9, 22.3/24.0,3.0/R1.6	753	1929

REGISTERED CIVIL ENGINEER — 12/22/09 DATE

2-1-10
PLANS APPROVAL DATE

REGISTERED PROFESSIONAL ENGINEER
JULIET SU
No. C56168
Exp.12/31/10
CIVIL
STATE OF CALIFORNIA

THE STATE OF CALIFORNIA OR ITS OFFICERS OR AGENTS SHALL NOT BE RESPONSIBLE FOR THE ACCURACY OR COMPLETENESS OF ELECTRONIC COPIES OF THIS PLAN SHEET.

MTS
16795 VON KARMAN AVE
SUITE 205
IRVINE, CA 92606

ORANGE COUNTY
TRANSPORTATION AUTHORITY
550 S. MAIN STREET
ORANGE, CA 92863-1584

NOTE:

1. FOR COMPLETE RIGHT OF WAY AND ACCURATE ACCESS DATA, SEE RIGHT OF WAY RECORD MAPS AT DISTRICT OFFICE.

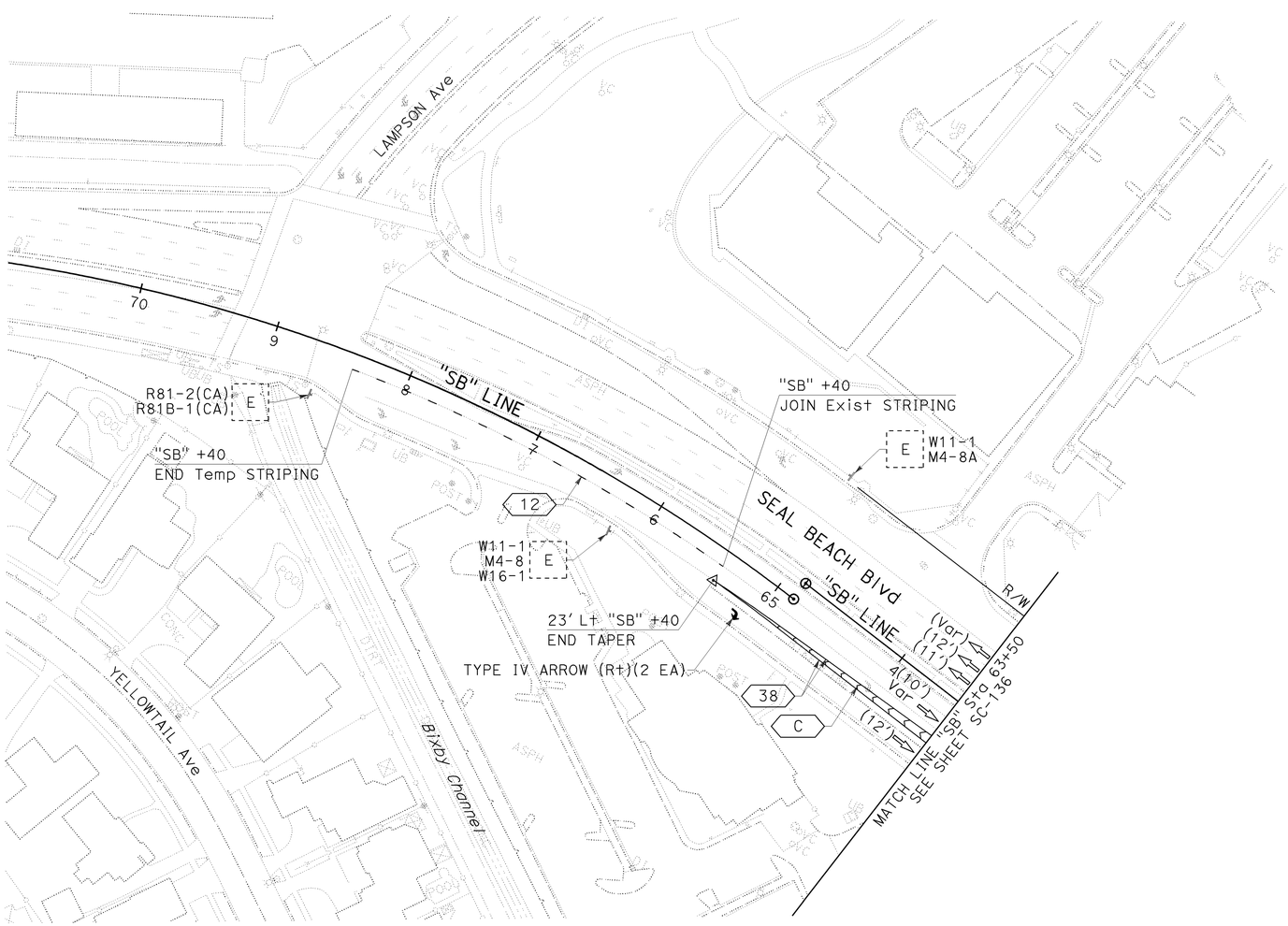

THIS PLAN ACCURATE FOR STAGE CONSTRUCTION AND TRAFFIC HANDLING WORK ONLY.

STAGE 2D.1

STAGE CONSTRUCTION AND TRAFFIC HANDLING PLAN

SCALE 1" = 50'

SC-146

REVISED BY	DATE REVISED
KLA	12/22/09

CALCULATED-DESIGNED BY: KELSIE ANDERSON
CHECKED BY: JULIET SU
CONSULTANT FUNCTIONAL SUPERVISOR: LEONARD SEQUEIRA
STATE OF CALIFORNIA - DEPARTMENT OF TRANSPORTATION
Caltrans

LAST REVISION DATE PLOTTED => 03-FEB-2010
08-10-09 TIME PLOTTED => 13:51

BORDER LAST REVISED 8/1/2008
RELATIVE BORDER SCALE IS IN INCHES 0 1 2 3
USERNAME => trrichf
DGN FILE => c07163ma146.dgn
CU 12235
EA 071631

Dist	COUNTY	ROUTE	POST MILES TOTAL PROJECT	SHEET No.	TOTAL SHEETS
12	Ora	22,405, 605	R0.3/R0.9, 22.3/24.0,3.0/R1.6	754	1929

REGISTERED CIVIL ENGINEER — 12/22/09 DATE

2-1-10 PLANS APPROVAL DATE

REGISTERED PROFESSIONAL ENGINEER — JULIET SU No. C56168 Exp.12/31/10 CIVIL — STATE OF CALIFORNIA

THE STATE OF CALIFORNIA OR ITS OFFICERS OR AGENTS SHALL NOT BE RESPONSIBLE FOR THE ACCURACY OR COMPLETENESS OF ELECTRONIC COPIES OF THIS PLAN SHEET.

MTS
16795 VON KARMAN AVE
SUITE 205
IRVINE, CA 92606

ORANGE COUNTY
TRANSPORTATION AUTHORITY
550 S. MAIN STREET
ORANGE, CA 92863-1584

NOTE:

1. FOR COMPLETE RIGHT OF WAY AND ACCURATE ACCESS DATA, SEE RIGHT OF WAY RECORD MAPS AT DISTRICT OFFICE.

CONSTRUCTION NOTES THIS SHEET:

1 Const SEAL BEACH Blvd INTERSECTION IMPROVEMENTS. CONSECUTIVE OVERNIGHT CLOSURES REQUIRED.

2 Const Temp Pvmt. CONSECUTIVE OVERNIGHT CLOSURES REQUIRED.

3 COLD PLANE AND OVERLAY. CONSECUTIVE OVERNIGHT CLOSURES REQUIRED.

4 Const DRAINAGE SYSTEM. SEE DRAINAGE PLANS.

5 Const JOINTED PLAIN CONCRETE PAVEMENT (RAMP TERMINI RAPID STRENGTH CONCRETE), PORTION OF "SB-1" LINE. CONSECUTIVE OVERNIGHT CLOSURES REQUIRED.

6 Const Temp RAMP, "TSB2-4" LINE.

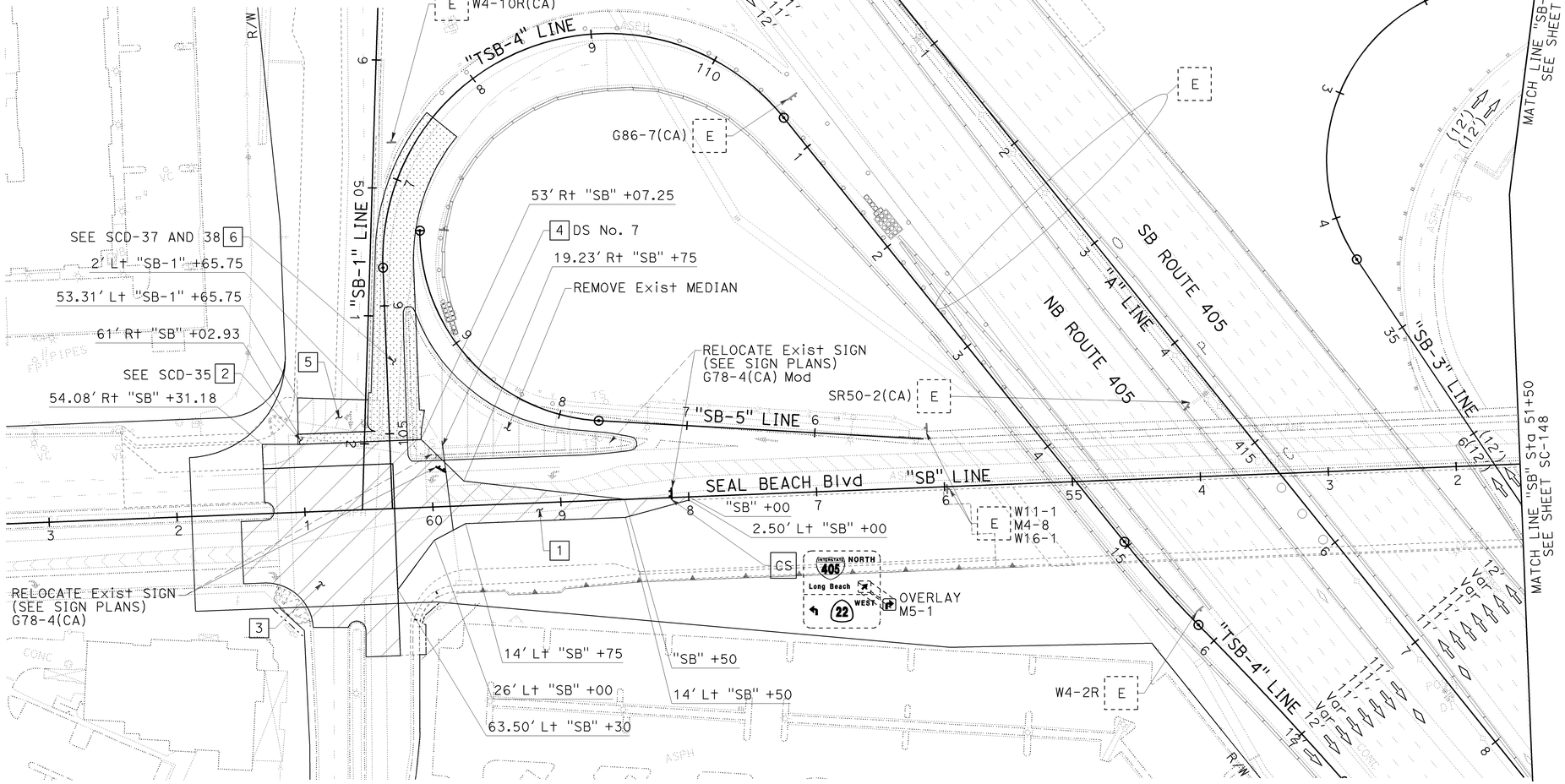

STAGE 2D.2

STAGE CONSTRUCTION AND TRAFFIC HANDLING PLAN

SCALE 1" = 50'

SC-147

THIS PLAN ACCURATE FOR STAGE CONSTRUCTION AND TRAFFIC HANDLING WORK ONLY.

CALCULATED-DESIGNED BY	CHECKED BY	REVISED BY	DATE REVISED
KELSIE ANDERSON	JULIET SU	KLA	12/22/09

CONSULTANT FUNCTIONAL SUPERVISOR: LEONARD SEQUEIRA

STATE OF CALIFORNIA - DEPARTMENT OF TRANSPORTATION — Caltrans

LAST REVISION DATE PLOTTED => 03-FEB-2010
08-10-09 TIME PLOTTED => 13:51

BORDER LAST REVISED 8/1/2008 | RELATIVE BORDER SCALE IS IN INCHES 0 1 2 3 | USERNAME => trrichf DGN FILE => c07163ma147.dgn | CU 12235 | EA 071631

Dist	COUNTY	ROUTE	POST MILES TOTAL PROJECT	SHEET No.	TOTAL SHEETS
12	Ora	22,405, 605	R0.3/R0.9, 22.3/24.0,3.0/R1.6	755	1929

REGISTERED CIVIL ENGINEER — 12/22/09 DATE

JULIET SU No. C56168 Exp.12/31/10 CIVIL — REGISTERED PROFESSIONAL ENGINEER — STATE OF CALIFORNIA

2-1-10
PLANS APPROVAL DATE

THE STATE OF CALIFORNIA OR ITS OFFICERS OR AGENTS SHALL NOT BE RESPONSIBLE FOR THE ACCURACY OR COMPLETENESS OF ELECTRONIC COPIES OF THIS PLAN SHEET.

MTS
16795 VON KARMAN AVE
SUITE 205
IRVINE, CA 92606

ORANGE COUNTY
TRANSPORTATION AUTHORITY
550 S. MAIN STREET
ORANGE, CA 92863-1584

NOTE:

1. FOR COMPLETE RIGHT OF WAY AND ACCURATE ACCESS DATA, SEE RIGHT OF WAY RECORD MAPS AT DISTRICT OFFICE.

CONSTRUCTION NOTES THIS SHEET:

1 Const SEAL BEACH Blvd INTERSECTION IMPROVEMENTS. CONSECUTIVE OVERNIGHT CLOSURES REQUIRED.

3 COLD PLANE AND OVERLAY. CONSECUTIVE OVERNIGHT CLOSURES REQUIRED.

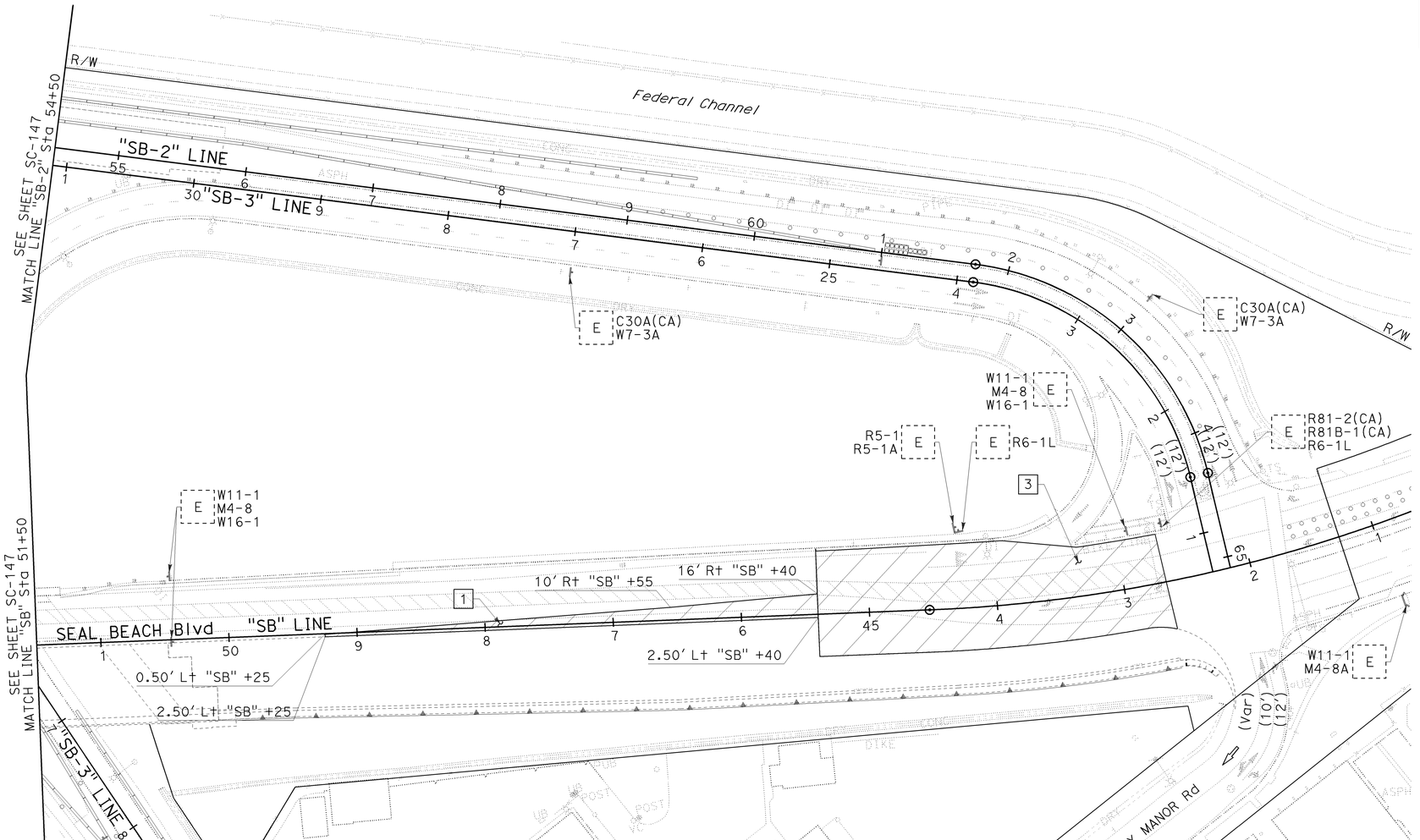

STAGE 2D.2

STAGE CONSTRUCTION AND TRAFFIC HANDLING PLAN

SCALE 1" = 50'

SC-148

THIS PLAN ACCURATE FOR STAGE CONSTRUCTION AND TRAFFIC HANDLING WORK ONLY.

REVISED BY	DATE REVISED
KLA	12/22/09

CALCULATED-DESIGNED BY: KELSIE ANDERSON
CHECKED BY: JULIET SU
CONSULTANT FUNCTIONAL SUPERVISOR: LEONARD SEQUEIRA
STATE OF CALIFORNIA - DEPARTMENT OF TRANSPORTATION
Caltrans

LAST REVISION DATE PLOTTED => 03-FEB-2010
TIME PLOTTED => 13:51

BORDER LAST REVISED 8/1/2008 | RELATIVE BORDER SCALE IS IN INCHES 0 1 2 3 | USERNAME => trrichf | DGN FILE => c07163ma148.dgn | CU 12235 | EA 071631

NOTE:

1. FOR COMPLETE RIGHT OF WAY AND ACCURATE ACCESS DATA, SEE RIGHT OF WAY RECORD MAPS AT DISTRICT OFFICE.

Dist	COUNTY	ROUTE	POST MILES TOTAL PROJECT	SHEET No.	TOTAL SHEETS
12	Ora	22,405, 605	R0.3/R0.9, 22.3/24.0,3.0/R1.6	756	1929

REGISTERED CIVIL ENGINEER — 12/22/09 DATE

2-1-10
PLANS APPROVAL DATE

REGISTERED PROFESSIONAL ENGINEER
JULIET SU
No. C56168
Exp.12/31/10
CIVIL
STATE OF CALIFORNIA

THE STATE OF CALIFORNIA OR ITS OFFICERS OR AGENTS SHALL NOT BE RESPONSIBLE FOR THE ACCURACY OR COMPLETENESS OF ELECTRONIC COPIES OF THIS PLAN SHEET.

MTS
16795 VON KARMAN AVE
SUITE 205
IRVINE, CA 92606

ORANGE COUNTY
TRANSPORTATION AUTHORITY
550 S. MAIN STREET
ORANGE, CA 92863-1584

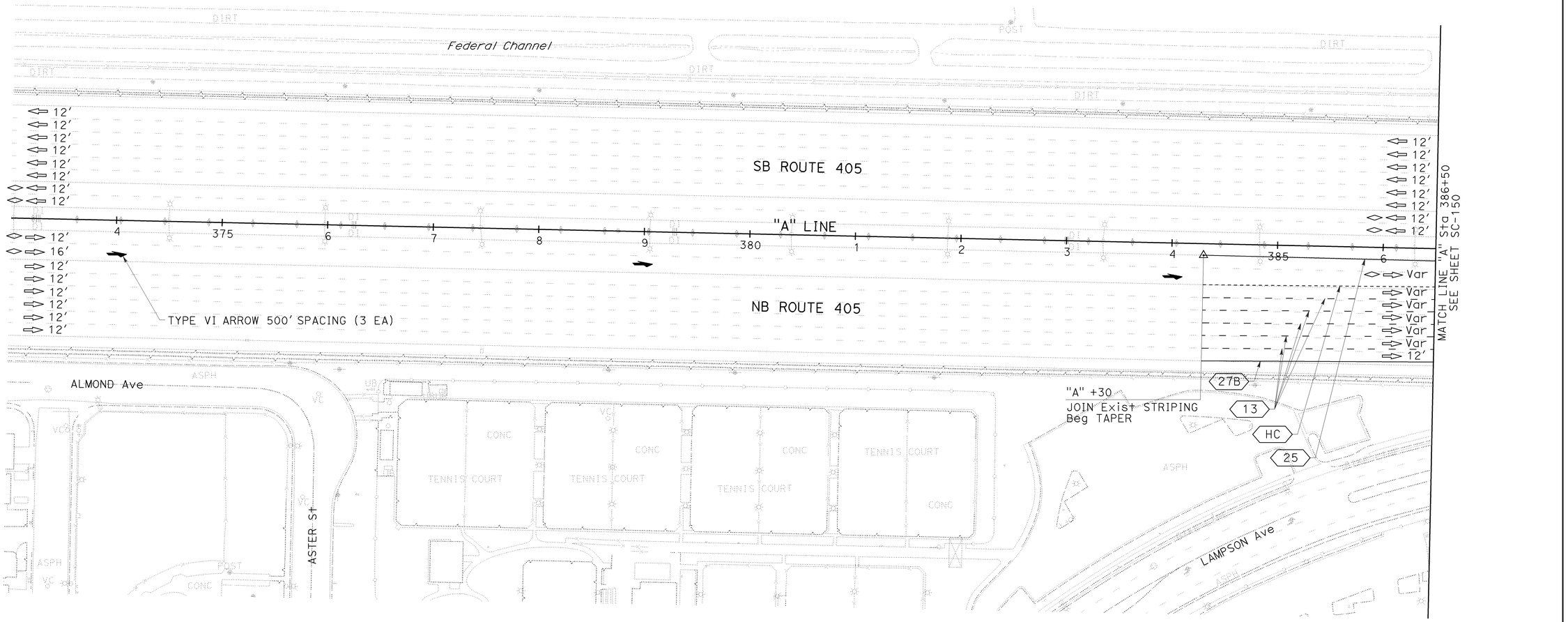

STAGE 3A.1

STAGE CONSTRUCTION AND TRAFFIC HANDLING PLAN

SCALE 1" = 50′

SC-149

THIS PLAN ACCURATE FOR STAGE CONSTRUCTION AND TRAFFIC HANDLING WORK ONLY.

REVISED BY	DATE REVISED
KLA	12/22/09

CALCULATED-DESIGNED BY: KELSIE ANDERSON
CHECKED BY: JULIET SU
CONSULTANT FUNCTIONAL SUPERVISOR: LEONARD SEQUEIRA
STATE OF CALIFORNIA - DEPARTMENT OF TRANSPORTATION
Caltrans

LAST REVISION DATE PLOTTED => 03-FEB-2010
TIME PLOTTED => 13:51
08-10-09

BORDER LAST REVISED 8/1/2008 | RELATIVE BORDER SCALE IS IN INCHES 0 1 2 3 | USERNAME => trrichf DGN FILE => c07163ma149.dgn | CU 12235 | EA 071631

Dist	COUNTY	ROUTE	POST MILES TOTAL PROJECT	SHEET No.	TOTAL SHEETS
12	Ora	22,405, 605	R0.3/R0.9, 22.3/24.0,3.0/R1.6	757	1929

REGISTERED CIVIL ENGINEER — 12/22/09 DATE

JULIET SU No. C56168 Exp.12/31/10 CIVIL — REGISTERED PROFESSIONAL ENGINEER — STATE OF CALIFORNIA

2-1-10
PLANS APPROVAL DATE

THE STATE OF CALIFORNIA OR ITS OFFICERS OR AGENTS SHALL NOT BE RESPONSIBLE FOR THE ACCURACY OR COMPLETENESS OF ELECTRONIC COPIES OF THIS PLAN SHEET.

MTS
16795 VON KARMAN AVE
SUITE 205
IRVINE, CA 92606

ORANGE COUNTY
TRANSPORTATION AUTHORITY
550 S. MAIN STREET
ORANGE, CA 92863-1584

NOTE:

1. FOR COMPLETE RIGHT OF WAY AND ACCURATE ACCESS DATA, SEE RIGHT OF WAY RECORD MAPS AT DISTRICT OFFICE.

CONSTRUCTION NOTES THIS SHEET:

1 Const OH SIGN. SEE SIGN PLANS.

14 Const MAINLINE IMPROVEMENTS.

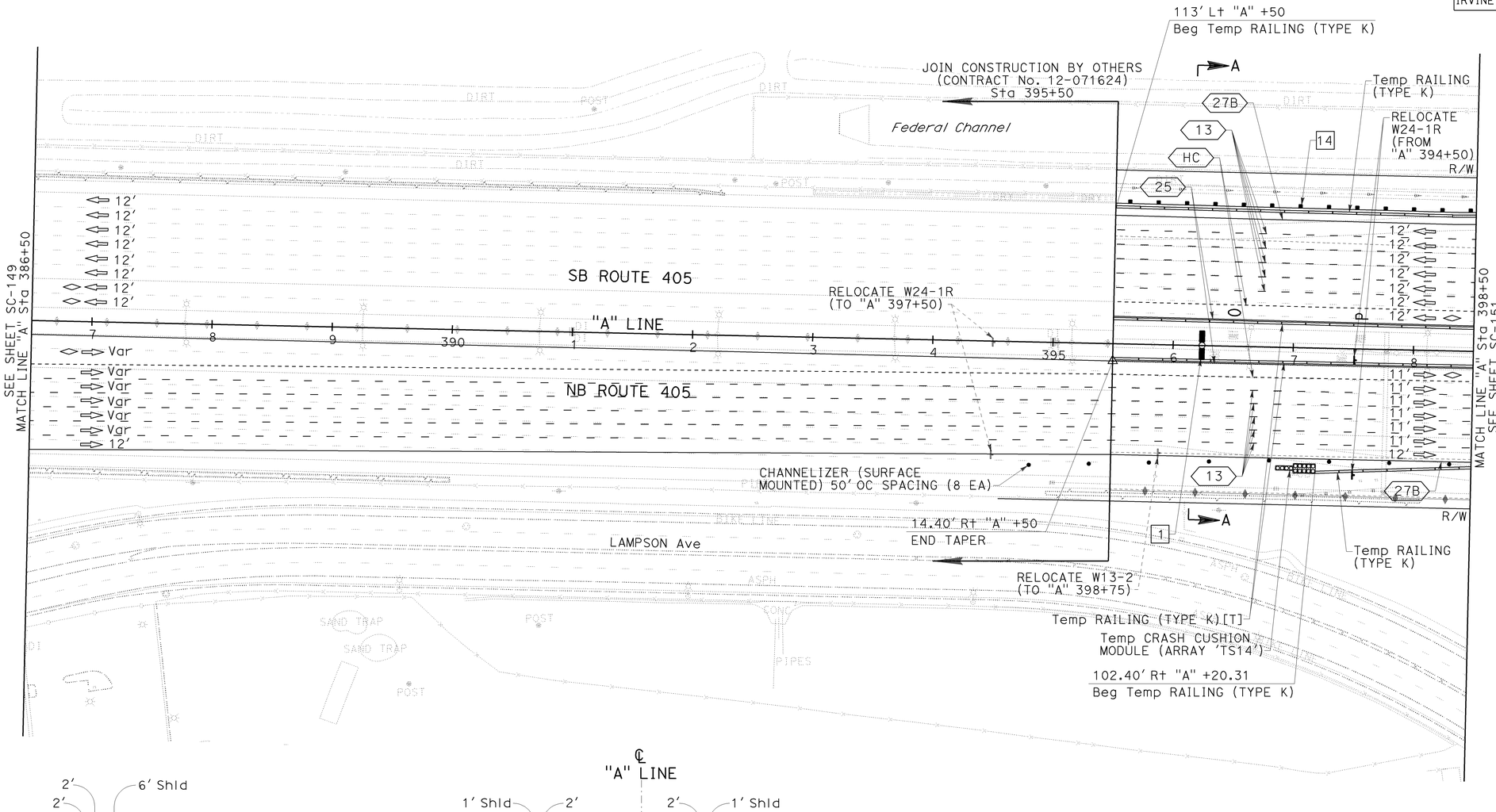

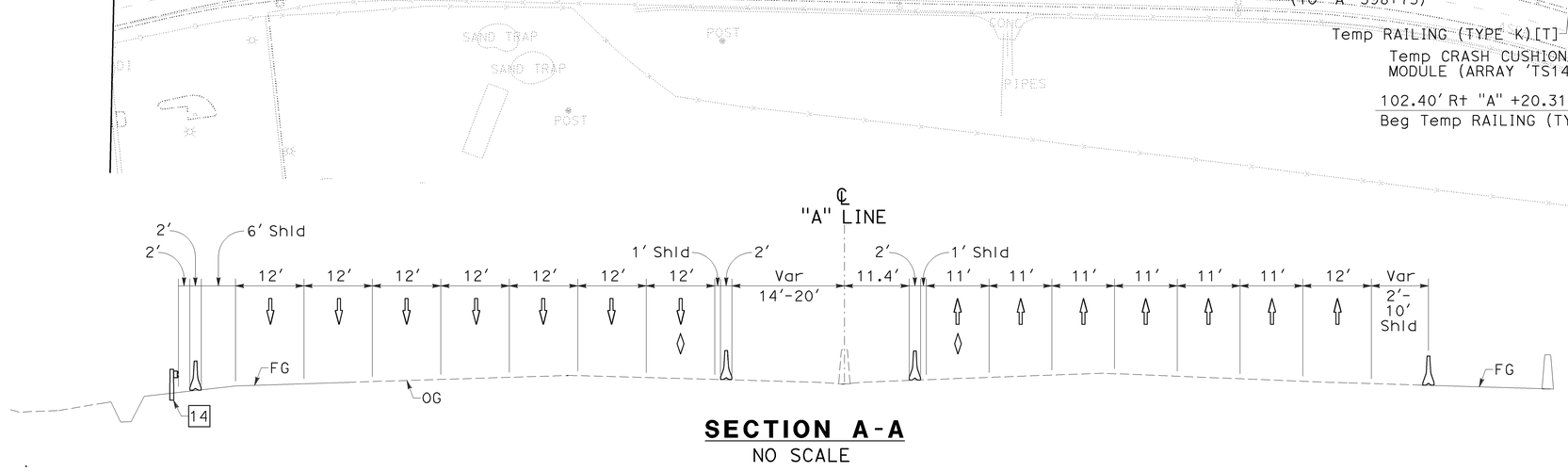

SECTION A-A
NO SCALE

THIS PLAN ACCURATE FOR STAGE CONSTRUCTION AND TRAFFIC HANDLING WORK ONLY.

STAGE 3A.1

STAGE CONSTRUCTION AND TRAFFIC HANDLING PLAN

SCALE 1" = 50'

SC-150

STATE OF CALIFORNIA - DEPARTMENT OF TRANSPORTATION
Caltrans

CONSULTANT FUNCTIONAL SUPERVISOR: LEONARD SEQUEIRA

CALCULATED-DESIGNED BY: KELSIE ANDERSON
CHECKED BY: JULIET SU

REVISED BY: KLA
DATE REVISED: 12/22/09

LAST REVISION
DATE PLOTTED => 03-FEB-2010
TIME PLOTTED => 13:51
08-10-09

BORDER LAST REVISED 8/1/2008
RELATIVE BORDER SCALE IS IN INCHES 0 1 2 3
USERNAME => trrichf
DGN FILE => c07163ma150.dgn
CU 12235
EA 071631

NOTE:

1. FOR COMPLETE RIGHT OF WAY AND ACCURATE ACCESS DATA, SEE RIGHT OF WAY RECORD MAPS AT DISTRICT OFFICE.

CONSTRUCTION NOTES THIS SHEET:

2 Const REMAINDER OF "SB-1" LINE.

4 Const Temp Pvmt. CONSECUTIVE OVERNIGHT LANE CLOSURES REQUIRED.

CURVE DATA				
No.	R	Δ	T	L
(301)	325.00′	35°18′34"	103.44′	200.29′

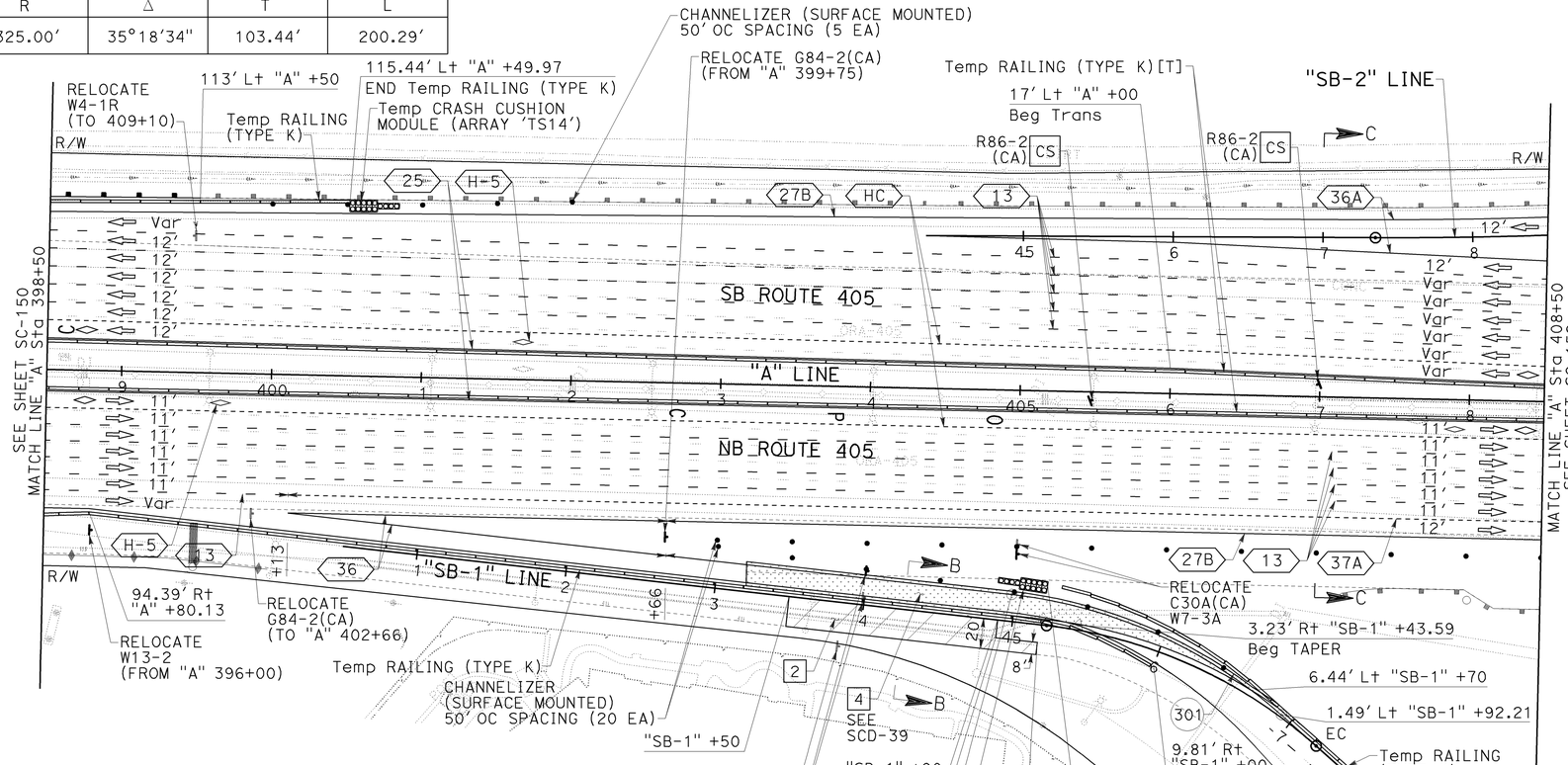

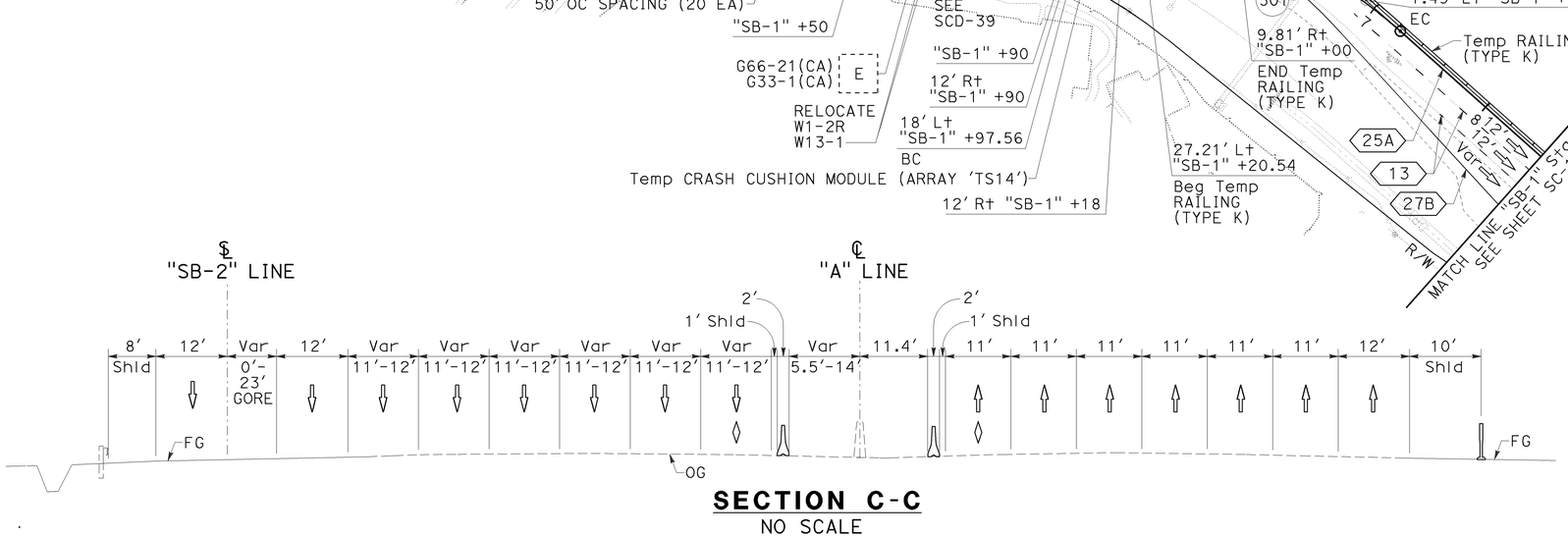

SECTION C-C
NO SCALE

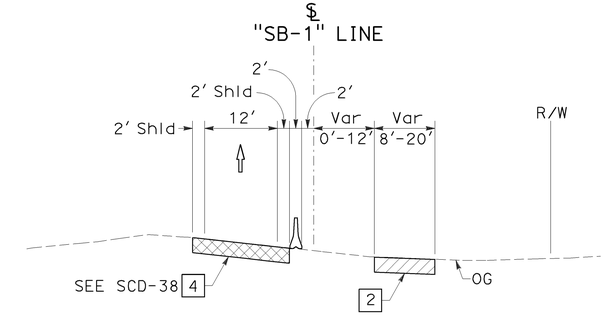

SECTION B-B
NO SCALE

THIS PLAN ACCURATE FOR STAGE CONSTRUCTION AND TRAFFIC HANDLING WORK ONLY.

STAGE 3A.1

STAGE CONSTRUCTION AND TRAFFIC HANDLING PLAN

SCALE: 1" = 50′

SC-151

Dist	COUNTY	ROUTE	POST MILES TOTAL PROJECT	SHEET No.	TOTAL SHEETS
12	Ora	22,405, 605	R0.3/R0.9, 22.3/24.0,3.0/R1.6	758	1929

REGISTERED CIVIL ENGINEER — 12/22/09 DATE

2-1-10
PLANS APPROVAL DATE

REGISTERED PROFESSIONAL ENGINEER — JULIET SU No. C56168 Exp.12/31/10 CIVIL — STATE OF CALIFORNIA

THE STATE OF CALIFORNIA OR ITS OFFICERS OR AGENTS SHALL NOT BE RESPONSIBLE FOR THE ACCURACY OR COMPLETENESS OF ELECTRONIC COPIES OF THIS PLAN SHEET.

MTS
16795 VON KARMAN AVE
SUITE 205
IRVINE, CA 92606

ORANGE COUNTY
TRANSPORTATION AUTHORITY
550 S. MAIN STREET
ORANGE, CA 92863-1584

REVISED BY	DATE REVISED
KLA	12/22/09

CALCULATED-DESIGNED BY: KELSIE ANDERSON
CHECKED BY: JULIET SU
CONSULTANT FUNCTIONAL SUPERVISOR: LEONARD SEQUEIRA
STATE OF CALIFORNIA - DEPARTMENT OF TRANSPORTATION

LAST REVISION DATE PLOTTED => 03-FEB-2010
TIME PLOTTED => 13:10
08-10-09

BORDER LAST REVISED 8/1/2008 | RELATIVE BORDER SCALE IS IN INCHES 0 1 2 3 | USERNAME => trstrk DGN FILE => c07163ma151.dgn | CU 12235 | EA 071631

NOTES:

1. FOR COMPLETE RIGHT OF WAY AND ACCURATE ACCESS DATA, SEE RIGHT OF WAY RECORD MAPS AT DISTRICT OFFICE.
2. SEE SHEET SC-153 FOR SECTIONS D-D, E-E, F-F, G-G, AND H-H.

CURVE DATA				
No.	R	Δ	T	L
302	550.00′	15°24′52"	74.43′	147.97′
303	562.00′	14°17′36"	70.47′	140.20′
304	574.00′	10°29′30"	52.71′	105.13′
305	562.00′	06°24′05"	31.43′	62.79′
306	193.00′	131°07′42"	424.76′	441.70′
307	550.00′	12°57′19"	62.45′	124.36′

CONSTRUCTION NOTES THIS SHEET:

3 Const SEAL BEACH Blvd IMPROVEMENTS.
4 Const Temp Pvmt. CONSECUTIVE OVERNIGHT LANE CLOSURES REQUIRED.
5 Const PORTION OF "SB-5" LINE.
6 Const PORTION OF "SB-3" LINE.
12 Const DRAINAGE SYSTEM. SEE DRAINAGE PLANS.
13 Const REMAINDER OF "SB-2" LINE IMPROVEMENTS.

Dist	COUNTY	ROUTE	POST MILES TOTAL PROJECT	SHEET No.	TOTAL SHEETS
12	Ora	22,405, 605	R0.3/R0.9, 22.3/24.0,3.0/R1.6	759	1929

REGISTERED CIVIL ENGINEER — 12/22/09 DATE

2-1-10 PLANS APPROVAL DATE

REGISTERED PROFESSIONAL ENGINEER — JULIET SU No. C56168 Exp.12/31/10 CIVIL — STATE OF CALIFORNIA

THE STATE OF CALIFORNIA OR ITS OFFICERS OR AGENTS SHALL NOT BE RESPONSIBLE FOR THE ACCURACY OR COMPLETENESS OF ELECTRONIC COPIES OF THIS PLAN SHEET.

MTS
16795 VON KARMAN AVE
SUITE 205
IRVINE, CA 92606

ORANGE COUNTY TRANSPORTATION AUTHORITY
550 S. MAIN STREET
ORANGE, CA 92863-1584

REVISED BY	DATE REVISED
KLA	12/22/09

CALCULATED-DESIGNED BY: KELSIE ANDERSON
CHECKED BY: JULIET SU
CONSULTANT FUNCTIONAL SUPERVISOR: LEONARD SEQUEIRA
STATE OF CALIFORNIA - DEPARTMENT OF TRANSPORTATION

STAGE 3A.1

STAGE CONSTRUCTION AND TRAFFIC HANDLING PLAN

SCALE: 1" = 50′

SC-152

THIS PLAN ACCURATE FOR STAGE CONSTRUCTION AND TRAFFIC HANDLING WORK ONLY.

LAST REVISION DATE PLOTTED => 03-FEB-2010
08-10-09 TIME PLOTTED => 13:10

BORDER LAST REVISED 8/1/2008 | RELATIVE BORDER SCALE IS IN INCHES (0 1 2 3) | USERNAME => trstrk | DGN FILE => c07163ma152.dgn | CU 12235 | EA 071631

Dist	COUNTY	ROUTE	POST MILES TOTAL PROJECT	SHEET No.	TOTAL SHEETS
12	Ora	22,405, 605	R0.3/R0.9, 22.3/24.0,3.0/R1.6	760	1929

REGISTERED CIVIL ENGINEER — 12/22/09 DATE

2-1-10 PLANS APPROVAL DATE

JULIET SU No. C56168 Exp.12/31/10 CIVIL — REGISTERED PROFESSIONAL ENGINEER — STATE OF CALIFORNIA

THE STATE OF CALIFORNIA OR ITS OFFICERS OR AGENTS SHALL NOT BE RESPONSIBLE FOR THE ACCURACY OR COMPLETENESS OF ELECTRONIC COPIES OF THIS PLAN SHEET.

MTS
16795 VON KARMAN AVE
SUITE 205
IRVINE, CA 92606

ORANGE COUNTY
TRANSPORTATION AUTHORITY
550 S. MAIN STREET
ORANGE, CA 92863-1584

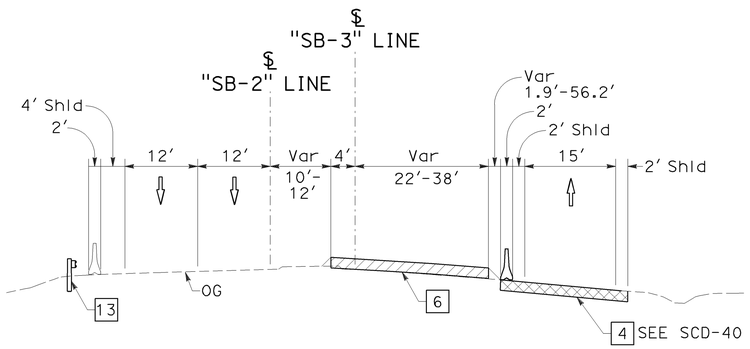

SECTION D-D

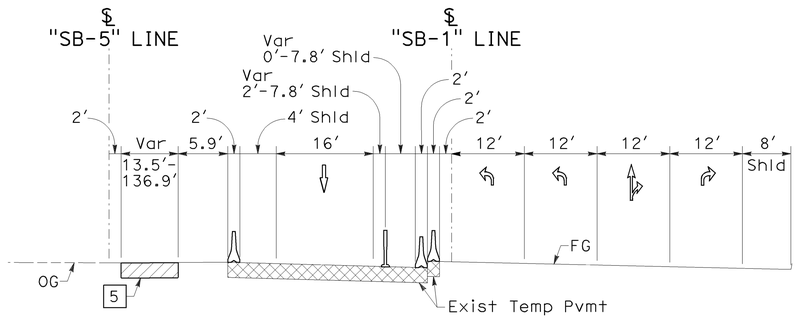

SECTION E-E

CONSTRUCTION NOTES THIS SHEET:

4 CONSTRUCT Temp Pvmt. CONSECUTIVE OVERNIGHT LANE CLOSURES REQUIRED.

5 Const PORTION OF "SB-5" LINE.

6 CONSTRUCT PORTION OF "SB-3" LINE.

13 Const REMAINDER OF "SB-2" LINE IMPROVEMENT.

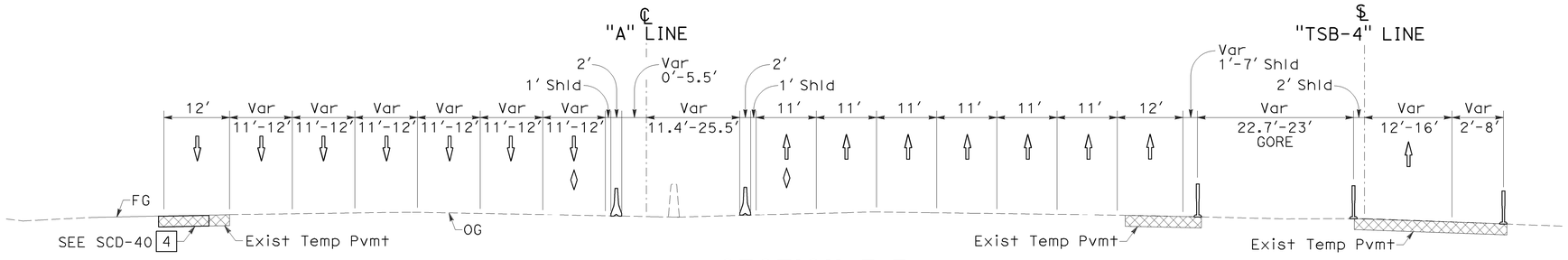

SECTION F-F

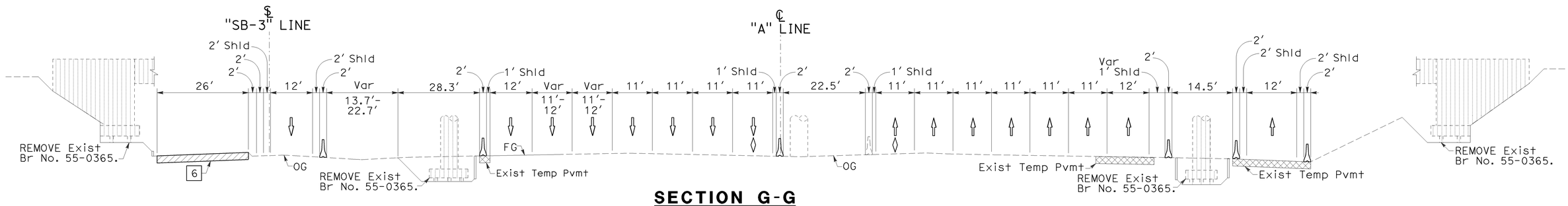

SECTION G-G

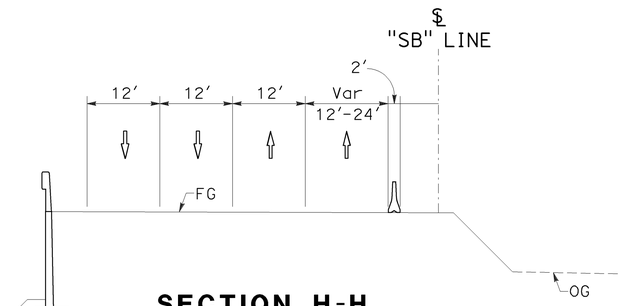

SECTION H-H

THIS PLAN ACCURATE FOR STAGE CONSTRUCTION AND TRAFFIC HANDLING WORK ONLY.

STAGE 3A.1

STAGE CONSTRUCTION AND TRAFFIC HANDLING PLAN

NO SCALE

SC-153

LAST REVISION DATE PLOTTED => 03-FEB-2010
08-10-09 TIME PLOTTED => 13:11

STATE OF CALIFORNIA - DEPARTMENT OF TRANSPORTATION — Caltrans

CONSULTANT FUNCTIONAL SUPERVISOR: LEONARD SEQUEIRA

CALCULATED-DESIGNED BY: KELSIE ANDERSON
CHECKED BY: JULIET SU

REVISED BY: KLA — DATE REVISED: 12/22/09

BORDER LAST REVISED 8/1/2008

RELATIVE BORDER SCALE IS IN INCHES 0 1 2 3

USERNAME => trstrk
DGN FILE => c07163ma153.dgn

CU 12235

EA 071631

Dist	COUNTY	ROUTE	POST MILES TOTAL PROJECT	SHEET No.	TOTAL SHEETS
12	Ora	22,405, 605	R0.3/R0.9, 22.3/24.0,3.0/R1.6	761	1929

REGISTERED CIVIL ENGINEER — 12/22/09 DATE

JULIET SU No. C56168 Exp.12/31/10 CIVIL — REGISTERED PROFESSIONAL ENGINEER — STATE OF CALIFORNIA

2-1-10
PLANS APPROVAL DATE

THE STATE OF CALIFORNIA OR ITS OFFICERS OR AGENTS SHALL NOT BE RESPONSIBLE FOR THE ACCURACY OR COMPLETENESS OF ELECTRONIC COPIES OF THIS PLAN SHEET.

MTS
16795 VON KARMAN AVE
SUITE 205
IRVINE, CA 92606

ORANGE COUNTY
TRANSPORTATION AUTHORITY
550 S. MAIN STREET
ORANGE, CA 92863-1584

NOTE:

1. FOR COMPLETE RIGHT OF WAY AND ACCURATE ACCESS DATA, SEE RIGHT OF WAY RECORD MAPS AT DISTRICT OFFICE.

CONSTRUCTION NOTES THIS SHEET:

1 Const OH SIGN. SEE SIGN PLANS.
6 Const PORTION OF "SB-3" LINE.
7 Const PORTION OF SB Pvmt.
12 Const DRAINAGE SYSTEM. SEE DRAINAGE PLANS.
15 REMOVE AND REUSE Exist GRATE AND PLACE BICYCLE PROOF GRATE. TACK WELD BICYCLE PROOF GRATE. WHEN NO LONGER REQUIRED FOR TEMPORARY TRAFFIC, SALVAGE BICYCLE PROOF GRATE AND REUSE Exist GRATE AT SAME LOCATION. DO NOT TACK WELD REUSED GRATE.

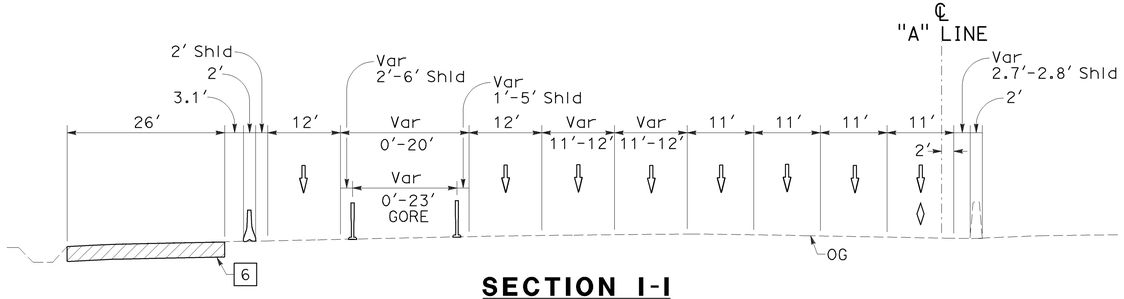

SECTION I-I
NO SCALE

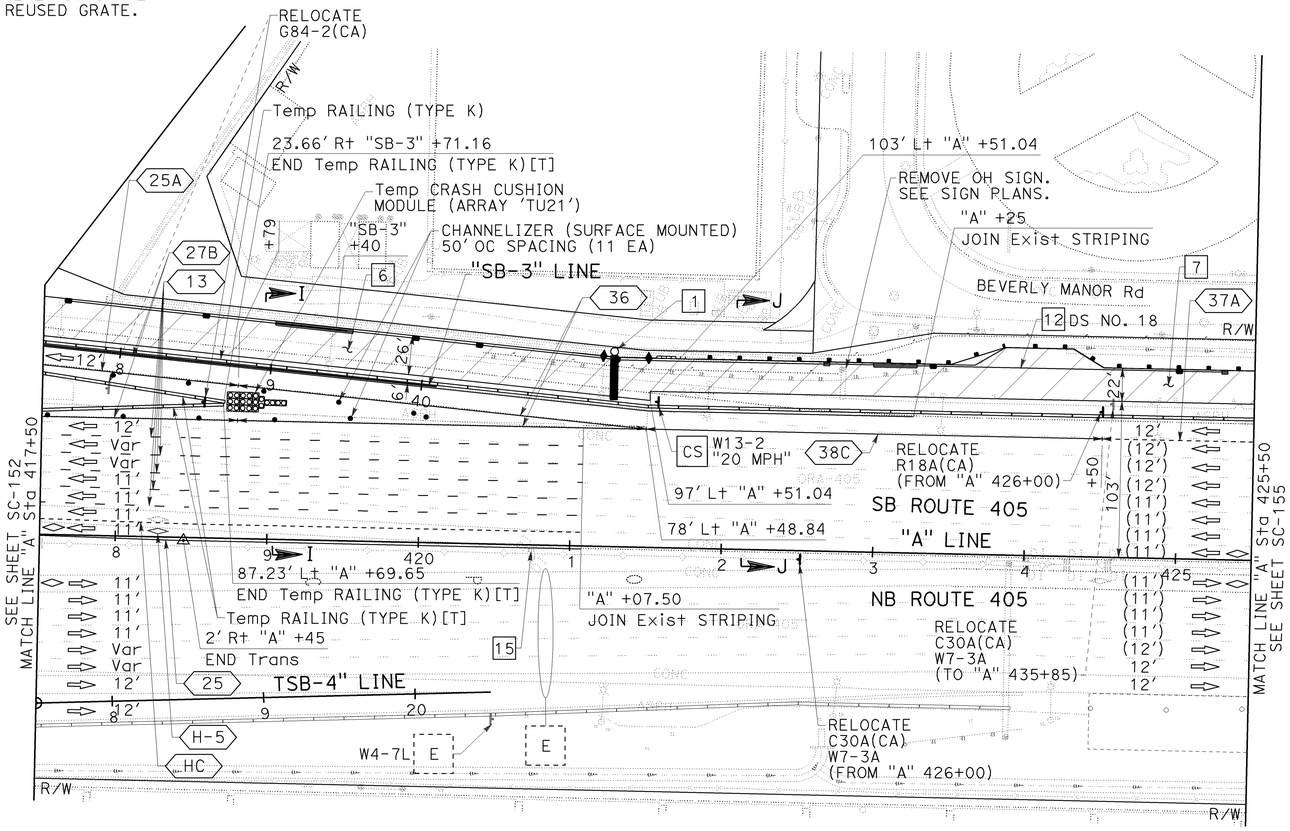

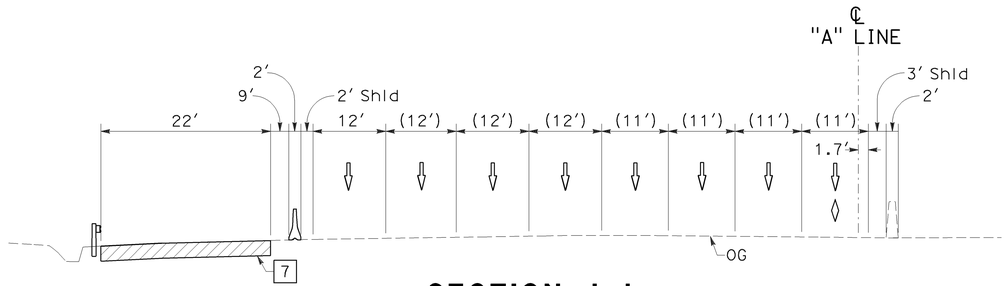

SECTION J-J
NO SCALE

THIS PLAN ACCURATE FOR STAGE CONSTRUCTION AND TRAFFIC HANDLING WORK ONLY.

STAGE 3A.1

STAGE CONSTRUCTION AND TRAFFIC HANDLING PLAN

SCALE: 1" = 50'

SC-154

REVISED BY	DATE REVISED
KLA	12/22/09

CALCULATED-DESIGNED BY: KELSIE ANDERSON
CHECKED BY: JULIET SU

CONSULTANT FUNCTIONAL SUPERVISOR: LEONARD SEQUEIRA

STATE OF CALIFORNIA - DEPARTMENT OF TRANSPORTATION

LAST REVISION DATE PLOTTED => 03-FEB-2010
TIME PLOTTED => 13:11
08-10-09

BORDER LAST REVISED 8/1/2008

RELATIVE BORDER SCALE IS IN INCHES 0 1 2 3

USERNAME => trstrk
DGN FILE => c07163ma154.dgn

CU 12235

EA 071631

Dist	COUNTY	ROUTE	POST MILES TOTAL PROJECT	SHEET No.	TOTAL SHEETS
12	Ora	22,405, 605	R0.3/R0.9, 22.3/24.0,3.0/R1.6	762	1929

REGISTERED CIVIL ENGINEER — 12/22/09 DATE

2-1-10
PLANS APPROVAL DATE

REGISTERED PROFESSIONAL ENGINEER — JULIET SU No. C56168 Exp.12/31/10 CIVIL — STATE OF CALIFORNIA

THE STATE OF CALIFORNIA OR ITS OFFICERS OR AGENTS SHALL NOT BE RESPONSIBLE FOR THE ACCURACY OR COMPLETENESS OF ELECTRONIC COPIES OF THIS PLAN SHEET.

MTS
16795 VON KARMAN AVE
SUITE 205
IRVINE, CA 92606

ORANGE COUNTY
TRANSPORTATION AUTHORITY
550 S. MAIN STREET
ORANGE, CA 92863-1584

NOTE:

1. FOR COMPLETE RIGHT OF WAY AND ACCURATE ACCESS DATA, SEE RIGHT OF WAY RECORD MAPS AT DISTRICT OFFICE.

CONSTRUCTION NOTE THIS SHEET:

7 Const PORTION OF SB Pvmt.

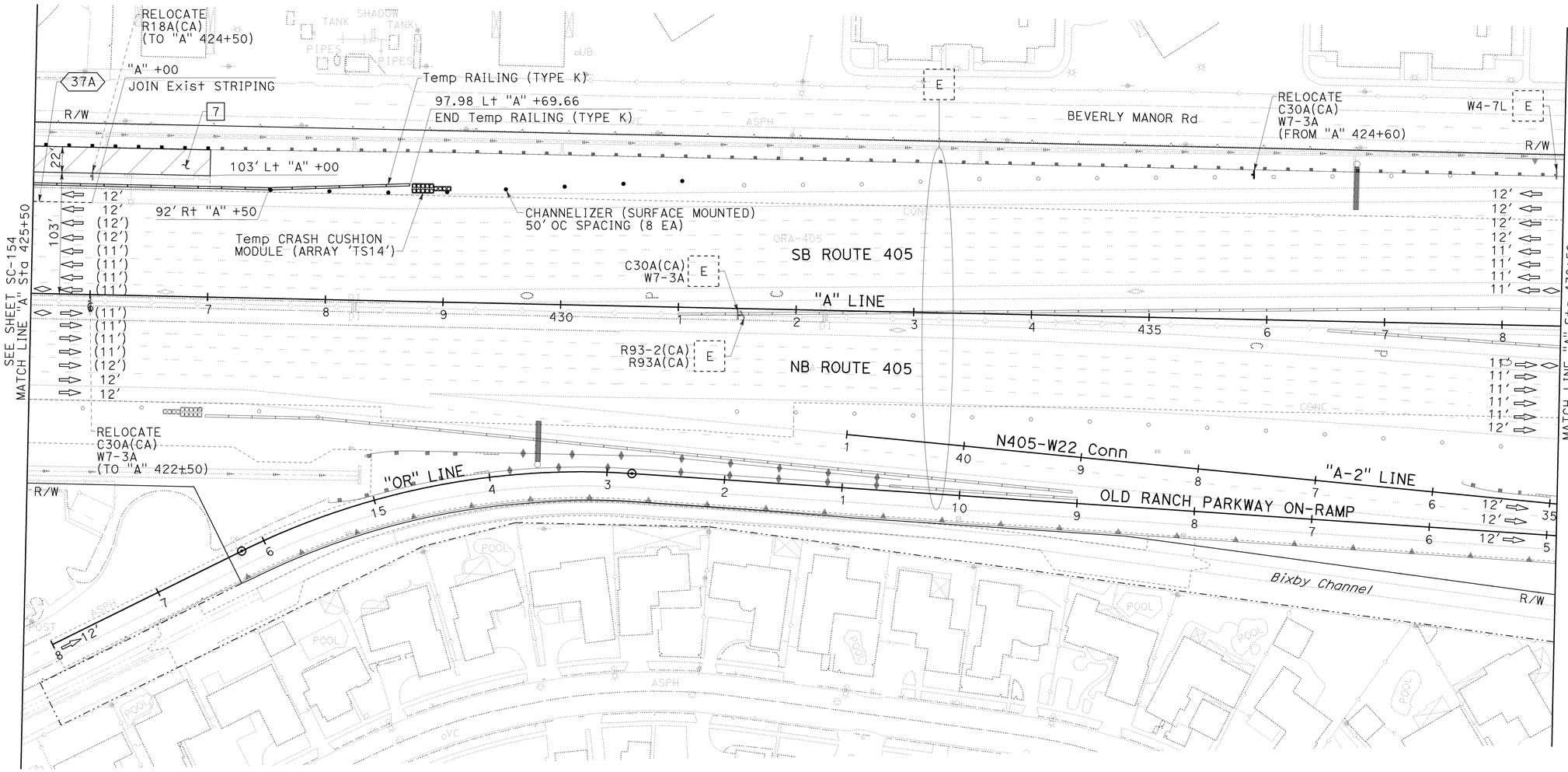

STAGE 3A.1

STAGE CONSTRUCTION AND TRAFFIC HANDLING PLAN

SCALE: 1" = 50'

SC-155

THIS PLAN ACCURATE FOR STAGE CONSTRUCTION AND TRAFFIC HANDLING WORK ONLY.

REVISED BY	DATE REVISED
KLA	12/22/09

CALCULATED-DESIGNED BY: KELSIE ANDERSON
CHECKED BY: JULIET SU
CONSULTANT FUNCTIONAL SUPERVISOR: LEONARD SEQUEIRA
STATE OF CALIFORNIA - DEPARTMENT OF TRANSPORTATION
Caltrans

LAST REVISION: DATE PLOTTED => 03-FEB-2010
08-10-09 TIME PLOTTED => 13:11

BORDER LAST REVISED 8/1/2008 | RELATIVE BORDER SCALE IS IN INCHES 0 1 2 3 | USERNAME => trstrk DGN FILE => c07163ma155.dgn | CU 12235 | EA 071631

NOTE:

1. FOR COMPLETE RIGHT OF WAY AND ACCURATE ACCESS DATA, SEE RIGHT OF WAY RECORD MAPS AT DISTRICT OFFICE.

Dist	COUNTY	ROUTE	POST MILES TOTAL PROJECT	SHEET No.	TOTAL SHEETS
12	Ora	22,405, 605	R0.3/R0.9, 22.3/24.0,3.0/R1.6	763	1929

REGISTERED CIVIL ENGINEER — 12/22/09 DATE

2-1-10
PLANS APPROVAL DATE

REGISTERED PROFESSIONAL ENGINEER
JULIET SU
No. C56168
Exp.12/31/10
CIVIL
STATE OF CALIFORNIA

THE STATE OF CALIFORNIA OR ITS OFFICERS OR AGENTS SHALL NOT BE RESPONSIBLE FOR THE ACCURACY OR COMPLETENESS OF ELECTRONIC COPIES OF THIS PLAN SHEET.

MTS
16795 VON KARMAN AVE
SUITE 205
IRVINE, CA 92606

ORANGE COUNTY
TRANSPORTATION AUTHORITY
550 S. MAIN STREET
ORANGE, CA 92863-1584

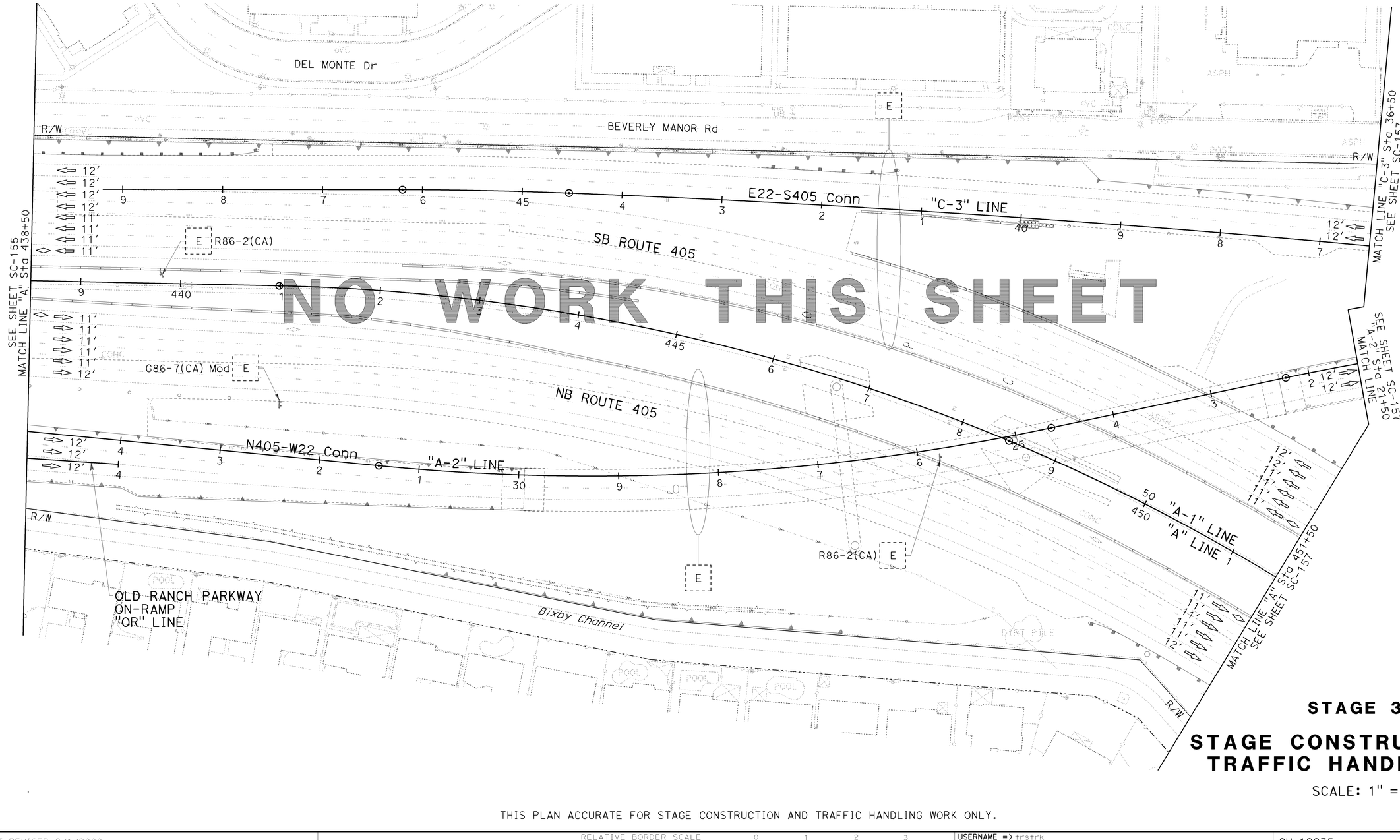

NO WORK THIS SHEET

STAGE 3A.1

STAGE CONSTRUCTION AND TRAFFIC HANDLING PLAN

SCALE: 1" = 50′

SC-156

THIS PLAN ACCURATE FOR STAGE CONSTRUCTION AND TRAFFIC HANDLING WORK ONLY.

REVISED BY	DATE REVISED
KLA	12/22/09

CALCULATED- KELSIE ANDERSON
DESIGNED BY
CHECKED BY JULIET SU

CONSULTANT FUNCTIONAL SUPERVISOR: LEONARD SEQUEIRA

STATE OF CALIFORNIA - DEPARTMENT OF TRANSPORTATION
Caltrans

LAST REVISION 08-10-09 | DATE PLOTTED => 03-FEB-2010 | TIME PLOTTED => 13:11

BORDER LAST REVISED 8/1/2008 | RELATIVE BORDER SCALE IS IN INCHES 0 1 2 3 | USERNAME => trstrk | DGN FILE => c07163ma156.dgn | CU 12235 | EA 071631

NOTE:

1. FOR COMPLETE RIGHT OF WAY AND ACCURATE ACCESS DATA, SEE RIGHT OF WAY RECORD MAPS AT DISTRICT OFFICE.

Dist	COUNTY	ROUTE	POST MILES TOTAL PROJECT	SHEET No.	TOTAL SHEETS
12	Ora	22,405, 605	R0.3/R0.9, 22.3/24.0,3.0/R1.6	764	1929

REGISTERED CIVIL ENGINEER — 12/22/09 DATE

2-1-10
PLANS APPROVAL DATE

REGISTERED PROFESSIONAL ENGINEER
JULIET SU
No. C56168
Exp.12/31/10
CIVIL
STATE OF CALIFORNIA

THE STATE OF CALIFORNIA OR ITS OFFICERS OR AGENTS SHALL NOT BE RESPONSIBLE FOR THE ACCURACY OR COMPLETENESS OF ELECTRONIC COPIES OF THIS PLAN SHEET.

MTS
16795 VON KARMAN AVE
SUITE 205
IRVINE, CA 92606

ORANGE COUNTY
TRANSPORTATION AUTHORITY
550 S. MAIN STREET
ORANGE, CA 92863-1584

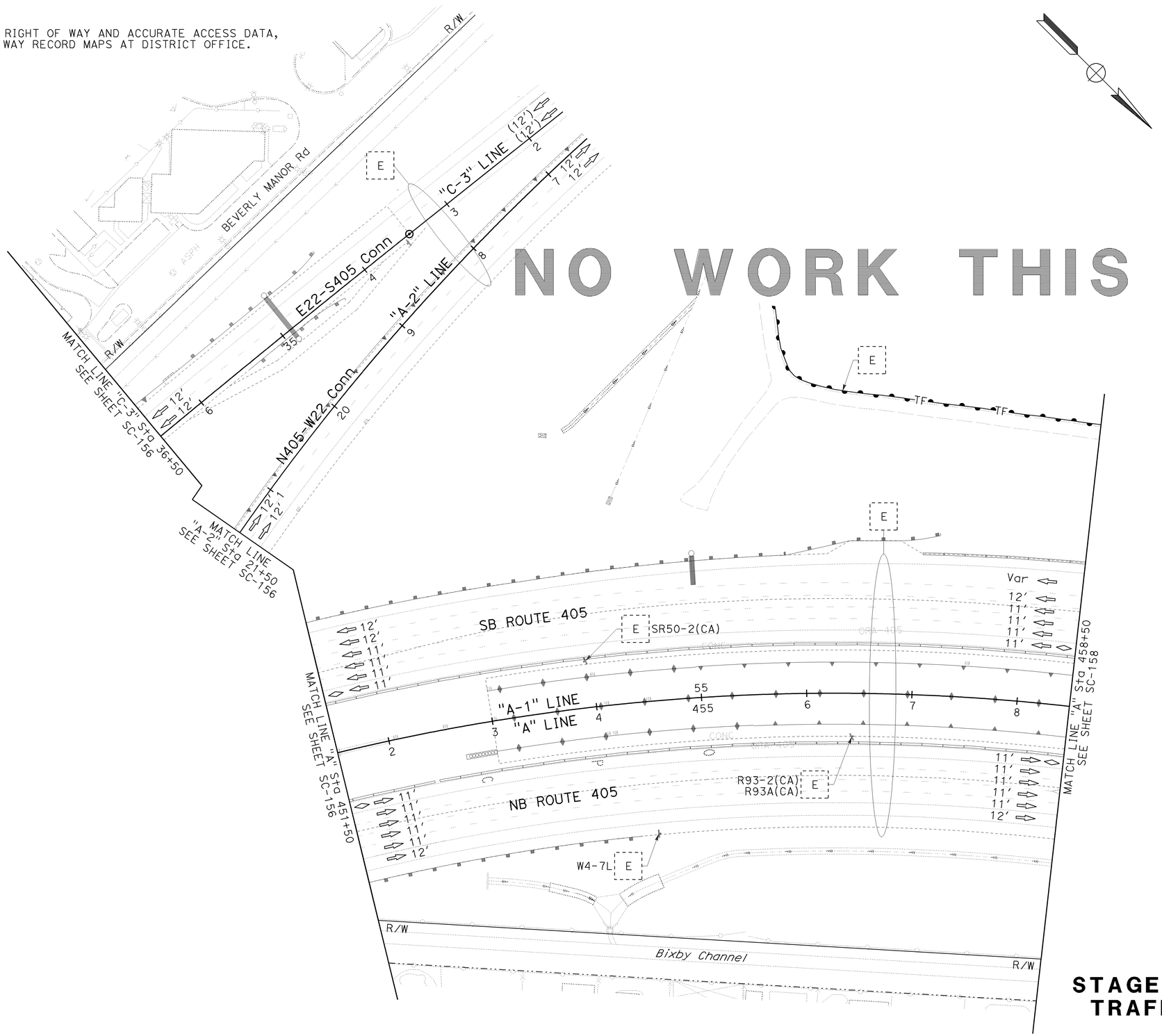

NO WORK THIS SHEET

STAGE 3A.1

STAGE CONSTRUCTION AND TRAFFIC HANDLING PLAN

SCALE: 1" = 50'

SC-157

THIS PLAN ACCURATE FOR STAGE CONSTRUCTION AND TRAFFIC HANDLING WORK ONLY.

CALCULATED-DESIGNED BY	REVISED BY	DATE REVISED
CHECKED BY	KELSIE ANDERSON	12/22/09
	JULIET SU	

CONSULTANT FUNCTIONAL SUPERVISOR: LEONARD SEQUEIRA

STATE OF CALIFORNIA - DEPARTMENT OF TRANSPORTATION

Caltrans

LAST REVISION 08-10-09 | DATE PLOTTED => 03-FEB-2010 | TIME PLOTTED => 13:35

BORDER LAST REVISED 8/1/2008 | RELATIVE BORDER SCALE IS IN INCHES 0 1 2 3 | USERNAME => trstrk | DGN FILE => c07163ma157.dgn | CU 12235 | EA 071631

Dist	COUNTY	ROUTE	POST MILES TOTAL PROJECT	SHEET No.	TOTAL SHEETS
12	Ora	22,405, 605	R0.3/R0.9, 22.3/24.0,3.0/R1.6	765	1929

REGISTERED CIVIL ENGINEER — 12/22/09 DATE

JULIET SU No. C56168 Exp.12/31/10 CIVIL — REGISTERED PROFESSIONAL ENGINEER — STATE OF CALIFORNIA

2-1-10
PLANS APPROVAL DATE

THE STATE OF CALIFORNIA OR ITS OFFICERS OR AGENTS SHALL NOT BE RESPONSIBLE FOR THE ACCURACY OR COMPLETENESS OF ELECTRONIC COPIES OF THIS PLAN SHEET.

MTS
16795 VON KARMAN AVE
SUITE 205
IRVINE, CA 92606

ORANGE COUNTY
TRANSPORTATION AUTHORITY
550 S. MAIN STREET
ORANGE, CA 92863-1584

NOTE:

1. FOR COMPLETE RIGHT OF WAY AND ACCURATE ACCESS DATA, SEE RIGHT OF WAY RECORD MAPS AT DISTRICT OFFICE.

CURVE DATA				
No.	R	Δ	T	L
308	2,122.00′	8°18′08"	154.01′	307.48′

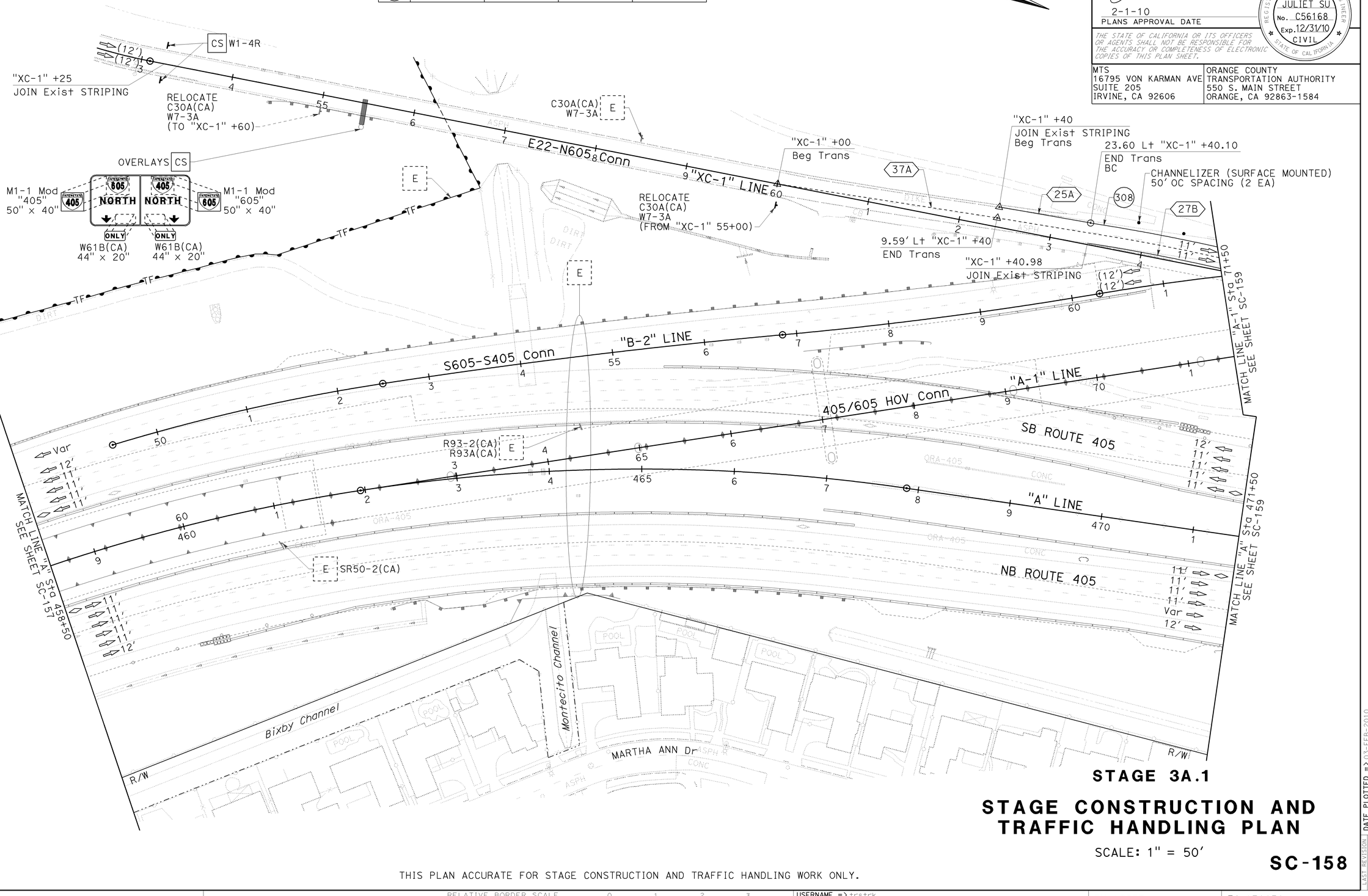

STAGE 3A.1

STAGE CONSTRUCTION AND TRAFFIC HANDLING PLAN

SCALE: 1" = 50′

SC-158

THIS PLAN ACCURATE FOR STAGE CONSTRUCTION AND TRAFFIC HANDLING WORK ONLY.

REVISED BY	DATE REVISED
KLA	12/22/09

CALCULATED-DESIGNED BY: KELSIE ANDERSON
CHECKED BY: JULIET SU
CONSULTANT FUNCTIONAL SUPERVISOR: LEONARD SEQUEIRA
STATE OF CALIFORNIA - DEPARTMENT OF TRANSPORTATION
Caltrans

LAST REVISION 08-10-09 | DATE PLOTTED => 03-FEB-2010 | TIME PLOTTED => 13:11

BORDER LAST REVISED 8/1/2008 | RELATIVE BORDER SCALE IS IN INCHES 0 1 2 3 | USERNAME => trstrk | DGN FILE => c07163ma158.dgn | CU 12235 | EA 071631

NOTE:

1. FOR COMPLETE RIGHT OF WAY AND ACCURATE ACCESS DATA, SEE RIGHT OF WAY RECORD MAPS AT DISTRICT OFFICE.

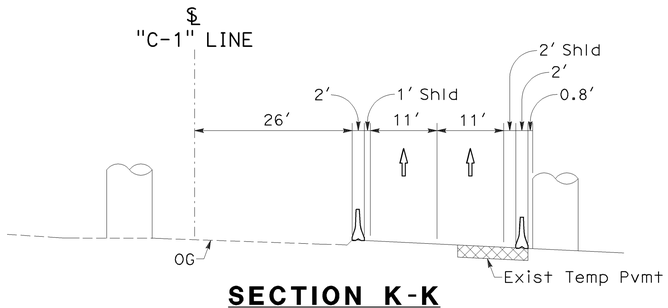

SECTION K-K
NO SCALE

Dist	COUNTY	ROUTE	POST MILES TOTAL PROJECT	SHEET No.	TOTAL SHEETS
12	Ora	22,405, 605	R0.3/R0.9, 22.3/24.0,3.0/R1.6	766	1929

REGISTERED CIVIL ENGINEER — 12/22/09 DATE

JULIET SU No. C56168 Exp.12/31/10 CIVIL — REGISTERED PROFESSIONAL ENGINEER — STATE OF CALIFORNIA

2-1-10
PLANS APPROVAL DATE

THE STATE OF CALIFORNIA OR ITS OFFICERS OR AGENTS SHALL NOT BE RESPONSIBLE FOR THE ACCURACY OR COMPLETENESS OF ELECTRONIC COPIES OF THIS PLAN SHEET.

MTS
16795 VON KARMAN AVE
SUITE 205
IRVINE, CA 92606

ORANGE COUNTY
TRANSPORTATION AUTHORITY
550 S. MAIN STREET
ORANGE, CA 92863-1584

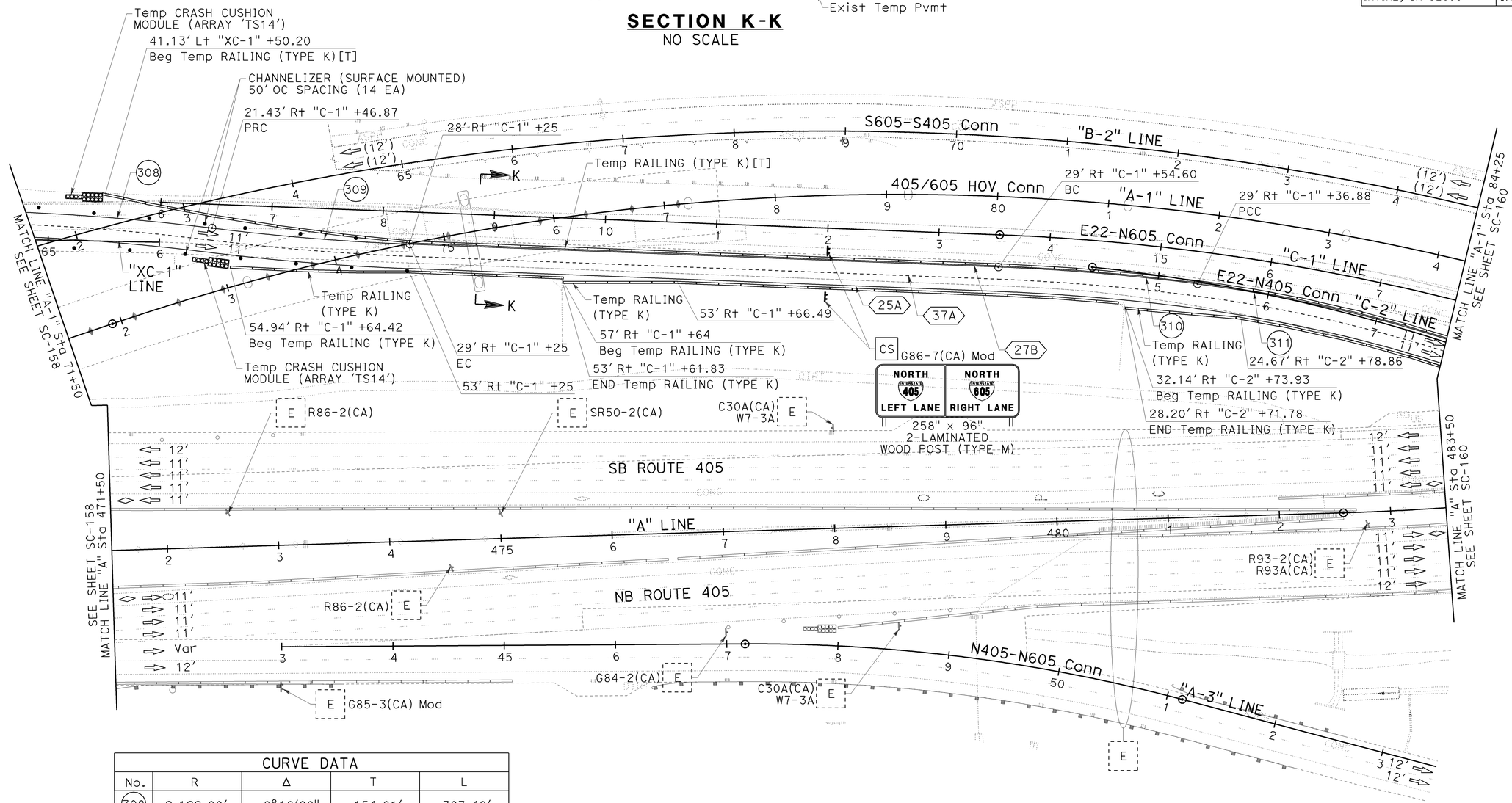

CURVE DATA				
No.	R	Δ	T	L
308	2,122.00'	8°18'08"	154.01'	307.48'
309	2,100.00'	4°51'57"	89.23'	178.35'
310	1,971.00'	5°13'20"	89.88'	179.64'
311	1,300.00'	12°26'10"	141.64'	282.16'

STAGE 3A.1

STAGE CONSTRUCTION AND TRAFFIC HANDLING PLAN

SCALE: 1" = 50'

SC-159

THIS PLAN ACCURATE FOR STAGE CONSTRUCTION AND TRAFFIC HANDLING WORK ONLY.

KELSIE ANDERSON	JULIET SU	KLA	12/22/09
CALCULATED-DESIGNED BY	CHECKED BY	REVISED BY	DATE REVISED

STATE OF CALIFORNIA - DEPARTMENT OF TRANSPORTATION
CONSULTANT FUNCTIONAL SUPERVISOR: LEONARD SEQUEIRA

LAST REVISION: DATE PLOTTED => 03-FEB-2010 08-10-09 TIME PLOTTED => 13:12

BORDER LAST REVISED 8/1/2008 | RELATIVE BORDER SCALE IS IN INCHES 0 1 2 3 | USERNAME => trstrk DGN FILE => c07163ma159.dgn | CU 12235 | EA 071631

Dist	COUNTY	ROUTE	POST MILES TOTAL PROJECT	SHEET No.	TOTAL SHEETS
12	Ora	22,405, 605	R0.3/R0.9, 22.3/24.0,3.0/R1.6	767	1929

REGISTERED CIVIL ENGINEER — 12/22/09 DATE

JULIET SU No. C56168 Exp.12/31/10 CIVIL — REGISTERED PROFESSIONAL ENGINEER — STATE OF CALIFORNIA

2-1-10
PLANS APPROVAL DATE

THE STATE OF CALIFORNIA OR ITS OFFICERS OR AGENTS SHALL NOT BE RESPONSIBLE FOR THE ACCURACY OR COMPLETENESS OF ELECTRONIC COPIES OF THIS PLAN SHEET.

MTS 16795 VON KARMAN AVE SUITE 205 IRVINE, CA 92606	ORANGE COUNTY TRANSPORTATION AUTHORITY 550 S. MAIN STREET ORANGE, CA 92863-1584

NOTE:

1. FOR COMPLETE RIGHT OF WAY AND ACCURATE ACCESS DATA, SEE RIGHT OF WAY RECORD MAPS AT DISTRICT OFFICE.

CONSTRUCTION NOTES THIS SHEET:

1 Const OH SIGN. SEE SIGN PLANS.
8 Const PORTION OF Br No. 55-1097G. SEE STRUCTURE PLANS.
9 Const PORTION OF Br No. 55-1098E. SEE STRUCTURE PLANS.
10 RECONSTRUCT MAINLINE ELEMENTS IMPACTED BY Br Const.
11 Const MEDIAN BARRIER.
12 Const DRAINAGE SYSTEM. SEE DRAINAGE PLANS.

CURVE DATA				
No.	R	Δ	T	L
311	1,300.00′	12°26′10"	141.64′	282.16′
312	1,563.00′	15°57′55"	219.18′	435.52′
500	2,500.00′	13°13′05"	705.50′	1,375.23′

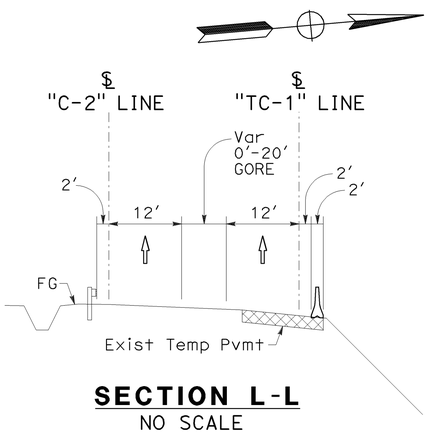

SECTION L-L
NO SCALE

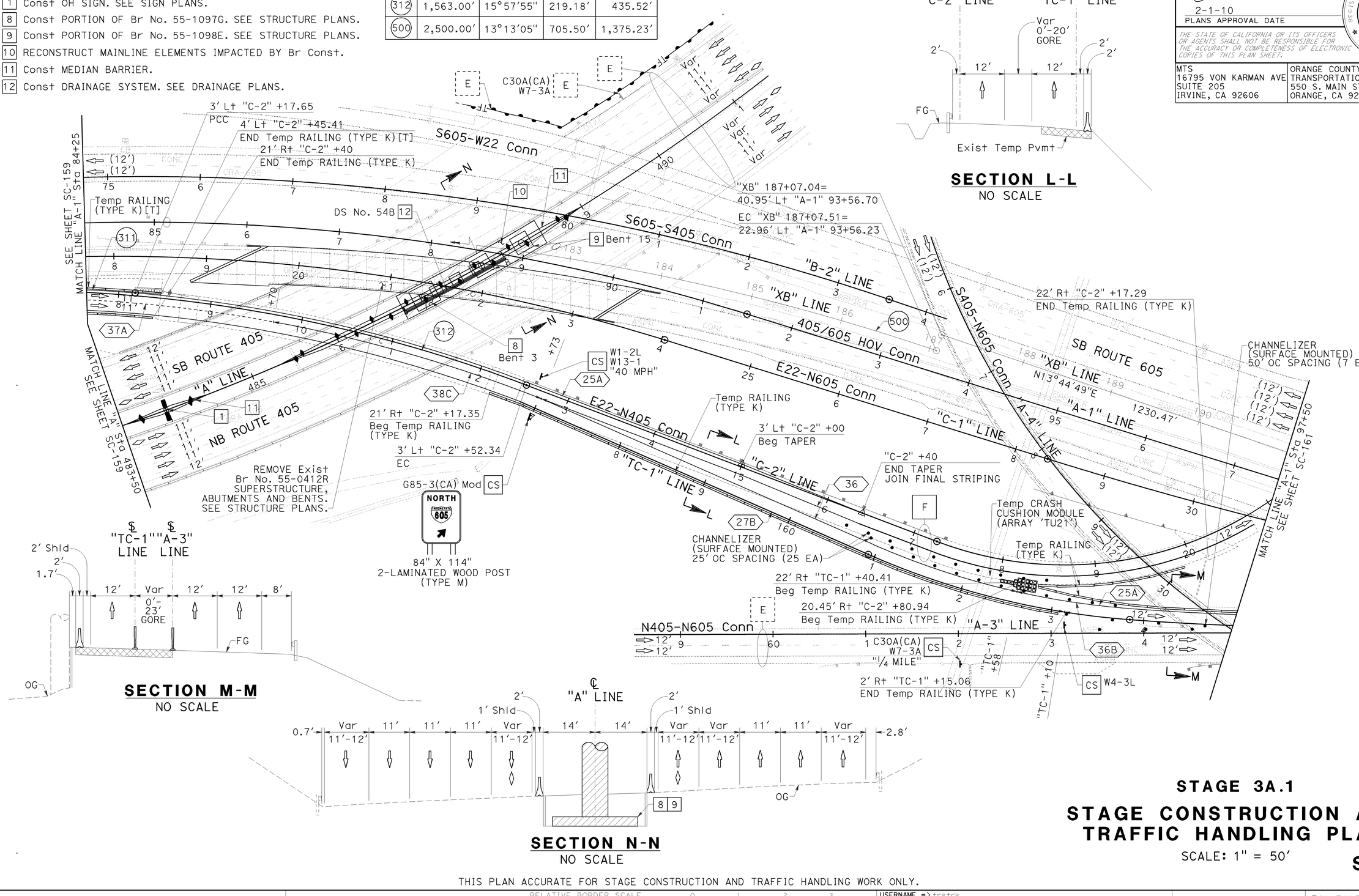

SECTION M-M
NO SCALE

SECTION N-N
NO SCALE

THIS PLAN ACCURATE FOR STAGE CONSTRUCTION AND TRAFFIC HANDLING WORK ONLY.

STAGE 3A.1

STAGE CONSTRUCTION AND TRAFFIC HANDLING PLAN

SCALE: 1" = 50′

SC-160

STATE OF CALIFORNIA - DEPARTMENT OF TRANSPORTATION
Caltrans
CONSULTANT FUNCTIONAL SUPERVISOR: LEONARD SEQUEIRA
CALCULATED-DESIGNED BY: KELSIE ANDERSON
CHECKED BY: JULIET SU
REVISED BY: KLA
DATE REVISED: 12/22/09

LAST REVISION DATE PLOTTED => 03-FEB-2010
TIME PLOTTED => 13:12
08-10-09

BORDER LAST REVISED 8/1/2008 | RELATIVE BORDER SCALE IS IN INCHES 0 1 2 3 | USERNAME => trstrk DGN FILE => c07163ma160.dgn | CU 12235 | EA 071631

Dist	COUNTY	ROUTE	POST MILES TOTAL PROJECT	SHEET No.	TOTAL SHEETS
12	Ora	22,405, 605	R0.3/R0.9, 22.3/24.0,3.0/R1.6	768	1929

REGISTERED CIVIL ENGINEER — 12/22/09 DATE

2-1-10
PLANS APPROVAL DATE

REGISTERED PROFESSIONAL ENGINEER — JULIET SU — No. C56168 — Exp.12/31/10 — CIVIL — STATE OF CALIFORNIA

THE STATE OF CALIFORNIA OR ITS OFFICERS OR AGENTS SHALL NOT BE RESPONSIBLE FOR THE ACCURACY OR COMPLETENESS OF ELECTRONIC COPIES OF THIS PLAN SHEET.

MTS 16795 VON KARMAN AVE SUITE 205 IRVINE, CA 92606	ORANGE COUNTY TRANSPORTATION AUTHORITY 550 S. MAIN STREET ORANGE, CA 92863-1584

NOTE:

1. FOR COMPLETE RIGHT OF WAY AND ACCURATE ACCESS DATA, SEE RIGHT OF WAY RECORD MAPS AT DISTRICT OFFICE.

CONSTRUCTION NOTES THIS SHEET:

4 Const Temp Pvmt. CONSECUTIVE OVERNIGHT LANE CLOSURES REQUIRED.

15 REMOVE AND REUSE Exist GRATE AND PLACE BICYCLE PROOF GRATE. TACK WELD BICYCLE PROOF GRATE. WHEN NO LONGER REQUIRED FOR TEMPORARY TRAFFIC, SALVAGE BICYCLE PROOF GRATE AND REUSE Exist GRATE AT SAME LOCATION. DO NOT TACK WELD REUSED GRATE.

CURVE DATA				
No.	R	Δ	T	L
313	1,784.00′	15°21′10"	240.46′	478.03′
314	1,048.96′	05°53′07"	53.92′	107.75′
315	1,756.00′	06°43′32"	103.18′	206.12′
316	11,389.00′	02°34′49"	256.49′	512.89′
501	9,500.00′	06°09′00"	510.34′	1,019.71′

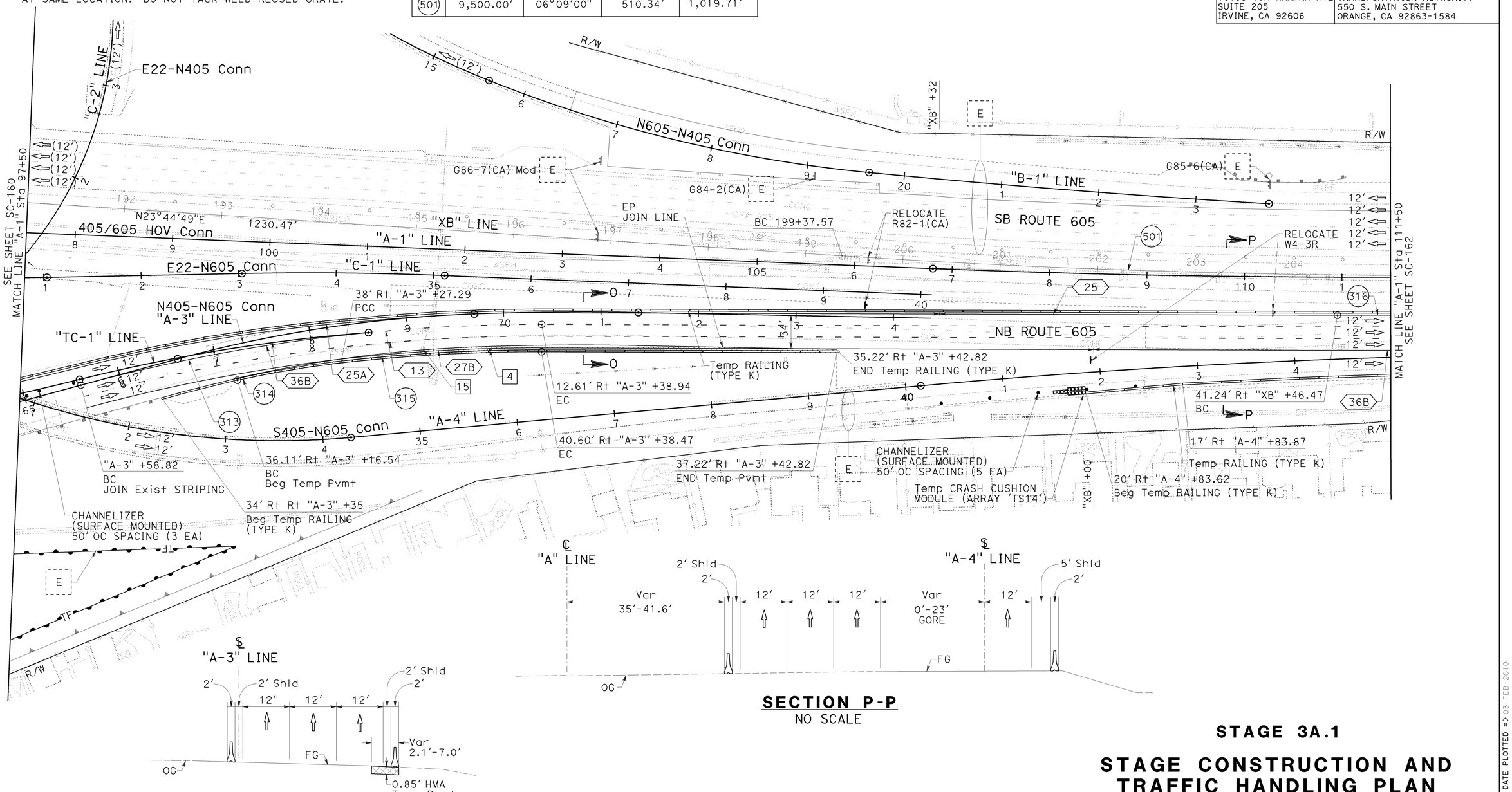

SECTION O-O
NO SCALE

SECTION P-P
NO SCALE

STAGE 3A.1

STAGE CONSTRUCTION AND TRAFFIC HANDLING PLAN

SCALE: 1" = 50′

SC-161

THIS PLAN ACCURATE FOR STAGE CONSTRUCTION AND TRAFFIC HANDLING WORK ONLY.

STATE OF CALIFORNIA - DEPARTMENT OF TRANSPORTATION
CONSULTANT FUNCTIONAL SUPERVISOR: LEONARD SEQUEIRA
CALCULATED-DESIGNED BY: KELSIE ANDERSON
CHECKED BY: JULIET SU
REVISED BY: KLA
DATE REVISED: 12/22/09

LAST REVISION DATE PLOTTED => 03-FEB-2010
08-10-09 TIME PLOTTED => 13:12

BORDER LAST REVISED 8/1/2008 | RELATIVE BORDER SCALE IS IN INCHES 0 1 2 3 | USERNAME => trstrk DGN FILE => c07163ma161.dgn | CU 12235 | EA 071631

NOTE:

1. FOR COMPLETE RIGHT OF WAY AND ACCURATE ACCESS DATA, SEE RIGHT OF WAY RECORD MAPS AT DISTRICT OFFICE.

CURVE DATA				
No.	R	Δ	T	L
(316)	11,389.00′	02°34′49"	256.49′	512.89′
(501)	9,500.00′	06°09′00"	510.34′	1,019.71′

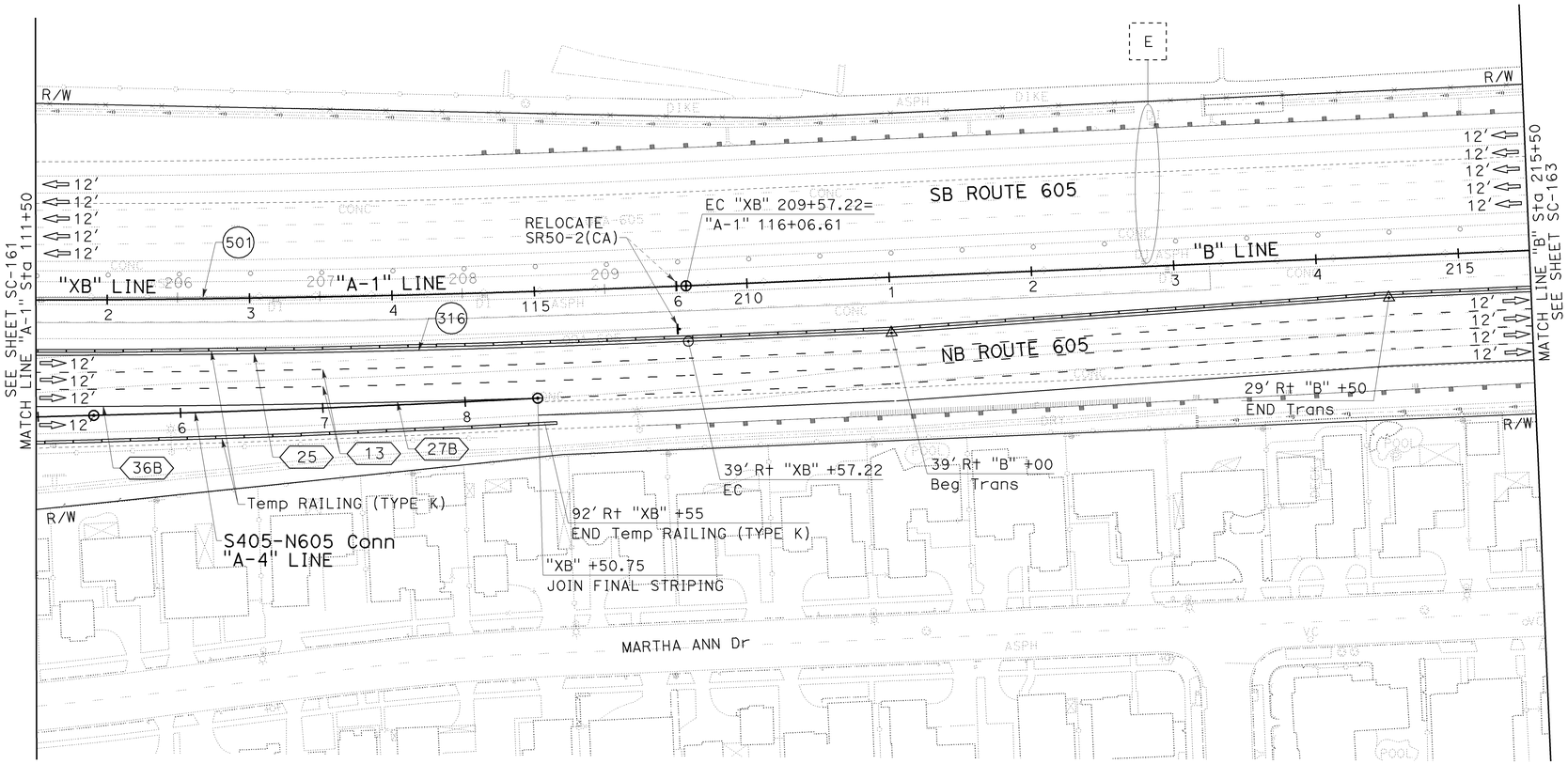

THIS PLAN ACCURATE FOR STAGE CONSTRUCTION AND TRAFFIC HANDLING WORK ONLY.

STAGE 3A.1

STAGE CONSTRUCTION AND TRAFFIC HANDLING PLAN

SCALE: 1" = 50′

SC-162

Dist	COUNTY	ROUTE	POST MILES TOTAL PROJECT	SHEET No.	TOTAL SHEETS
12	Ora	22,405, 605	R0.3/R0.9, 22.3/24.0,3.0/R1.6	769	1929

REGISTERED CIVIL ENGINEER — 12/22/09 DATE

2-1-10 PLANS APPROVAL DATE

REGISTERED PROFESSIONAL ENGINEER — JULIET SU No. C56168 Exp.12/31/10 CIVIL — STATE OF CALIFORNIA

THE STATE OF CALIFORNIA OR ITS OFFICERS OR AGENTS SHALL NOT BE RESPONSIBLE FOR THE ACCURACY OR COMPLETENESS OF ELECTRONIC COPIES OF THIS PLAN SHEET.

MTS
16795 VON KARMAN AVE
SUITE 205
IRVINE, CA 92606

ORANGE COUNTY
TRANSPORTATION AUTHORITY
550 S. MAIN STREET
ORANGE, CA 92863-1584

REVISED BY	DATE REVISED
KLA	12/22/09

CALCULATED-DESIGNED BY: KELSIE ANDERSON
CHECKED BY: JULIET SU

CONSULTANT FUNCTIONAL SUPERVISOR: LEONARD SEQUEIRA

STATE OF CALIFORNIA - DEPARTMENT OF TRANSPORTATION

Caltrans

LAST REVISION DATE PLOTTED => 03-FEB-2010
TIME PLOTTED => 13:12
08-10-09

BORDER LAST REVISED 8/1/2008 | RELATIVE BORDER SCALE IS IN INCHES 0 1 2 3 | USERNAME => trstrk DGN FILE => c07163ma162.dgn | CU 12235 | EA 071631

Dist	COUNTY	ROUTE	POST MILES TOTAL PROJECT	SHEET No.	TOTAL SHEETS
12	Ora	22,405, 605	R0.3/R0.9, 22.3/24.0,3.0/R1.6	770	1929

REGISTERED CIVIL ENGINEER — 12/22/09 DATE

2-1-10
PLANS APPROVAL DATE

REGISTERED PROFESSIONAL ENGINEER
JULIET SU
No. C56168
Exp.12/31/10
CIVIL
STATE OF CALIFORNIA

THE STATE OF CALIFORNIA OR ITS OFFICERS OR AGENTS SHALL NOT BE RESPONSIBLE FOR THE ACCURACY OR COMPLETENESS OF ELECTRONIC COPIES OF THIS PLAN SHEET.

MTS
16795 VON KARMAN AVE
SUITE 205
IRVINE, CA 92606

ORANGE COUNTY
TRANSPORTATION AUTHORITY
550 S. MAIN STREET
ORANGE, CA 92863-1584

NOTE:

1. FOR COMPLETE RIGHT OF WAY AND ACCURATE ACCESS DATA, SEE RIGHT OF WAY RECORD MAPS AT DISTRICT OFFICE.

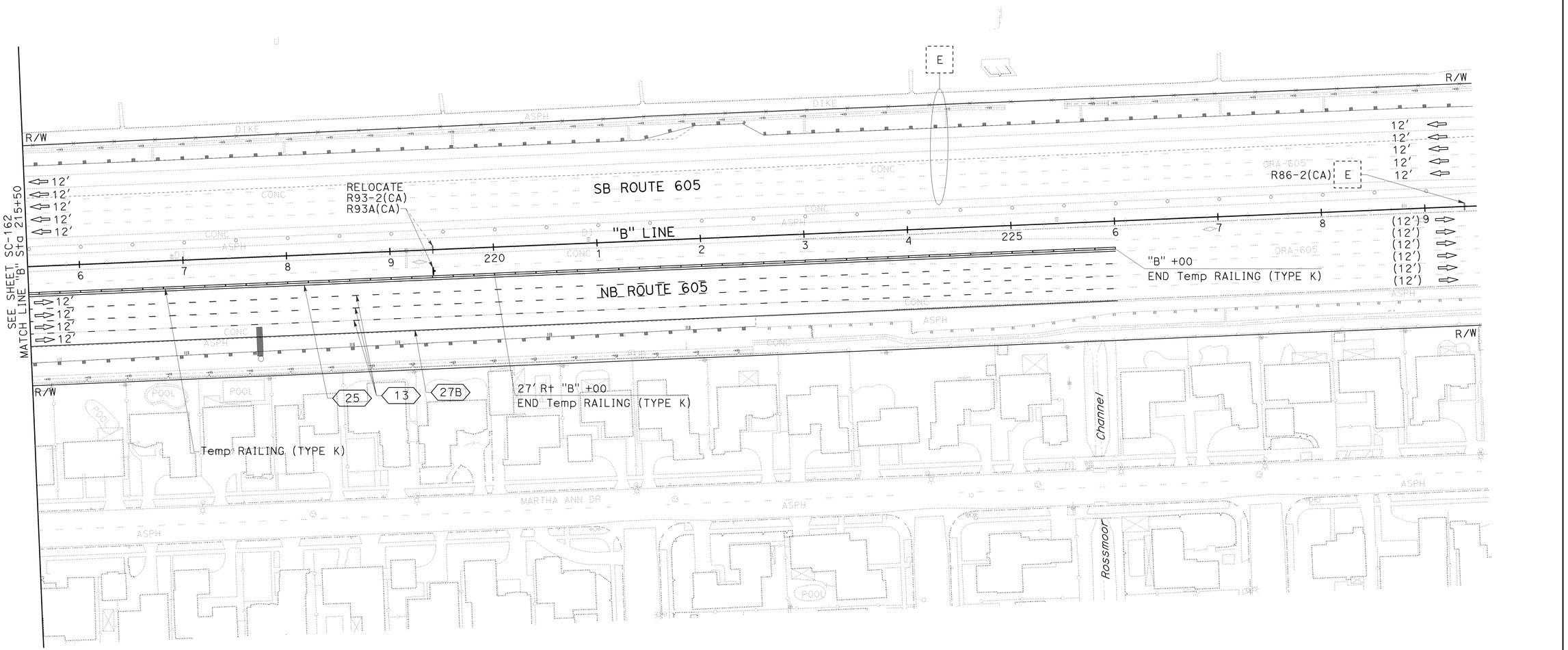

STAGE 3A.1

STAGE CONSTRUCTION AND TRAFFIC HANDLING PLAN

SCALE: 1" = 50′

SC-163

THIS PLAN ACCURATE FOR STAGE CONSTRUCTION AND TRAFFIC HANDLING WORK ONLY.

STATE OF CALIFORNIA - DEPARTMENT OF TRANSPORTATION
Caltrans

CONSULTANT FUNCTIONAL SUPERVISOR: LEONARD SEQUEIRA
CALCULATED-DESIGNED BY: KELSIE ANDERSON
CHECKED BY: JULIET SU
REVISED BY: KLA
DATE REVISED: 12/22/09

LAST REVISION | DATE PLOTTED => 03-FEB-2010 | 08-10-09 | TIME PLOTTED => 13:13

BORDER LAST REVISED 8/1/2008

RELATIVE BORDER SCALE IS IN INCHES 0 1 2 3

USERNAME => trstrk
DGN FILE => c07163ma163.dgn

CU 12235

EA 071631

Dist	COUNTY	ROUTE	POST MILES TOTAL PROJECT	SHEET No.	TOTAL SHEETS
12	Ora	22,405, 605	R0.3/R0.9, 22.3/24.0,3.0/R1.6	771	1929

REGISTERED CIVIL ENGINEER — 12/22/09 DATE

JULIET SU No. C56168 Exp.12/31/10 CIVIL — REGISTERED PROFESSIONAL ENGINEER — STATE OF CALIFORNIA

2-1-10
PLANS APPROVAL DATE

THE STATE OF CALIFORNIA OR ITS OFFICERS OR AGENTS SHALL NOT BE RESPONSIBLE FOR THE ACCURACY OR COMPLETENESS OF ELECTRONIC COPIES OF THIS PLAN SHEET.

MTS
16795 VON KARMAN AVE
SUITE 205
IRVINE, CA 92606

ORANGE COUNTY
TRANSPORTATION AUTHORITY
550 S. MAIN STREET
ORANGE, CA 92863-1584

NOTE:

1. FOR COMPLETE RIGHT OF WAY AND ACCURATE ACCESS DATA, SEE RIGHT OF WAY RECORD MAPS AT DISTRICT OFFICE.

CONSTRUCTION NOTES THIS SHEET:

4 Const Temp Pvmt. CONSECUTIVE OVERNIGHT LANE CLOSURES REQUIRED.

13 Const REMAINDER OF "SB-2" LINE IMPROVEMENTS.

CURVE DATA				
No.	R	Δ	T	L
307	550.00′	12°57′19"	62.45′	124.36
317	1,300.00′	10°29′24"	119.34′	238.01′
318	562.00′	06°54′25"	33.92′	67.75′
319	574.00′	12°47′41"	64.36′	128.18′
320	1,410.00′	04°16′08"	52.55′	105.06′
321	762.00′	15°22′52"	102.90′	204.56′
322	330.00′	36°12′04"	107.86′	208.50′
323	400.00′	32°43′22"	117.43′	228.45′
324	550.00′	12°57′19"	62.45′	124.36′

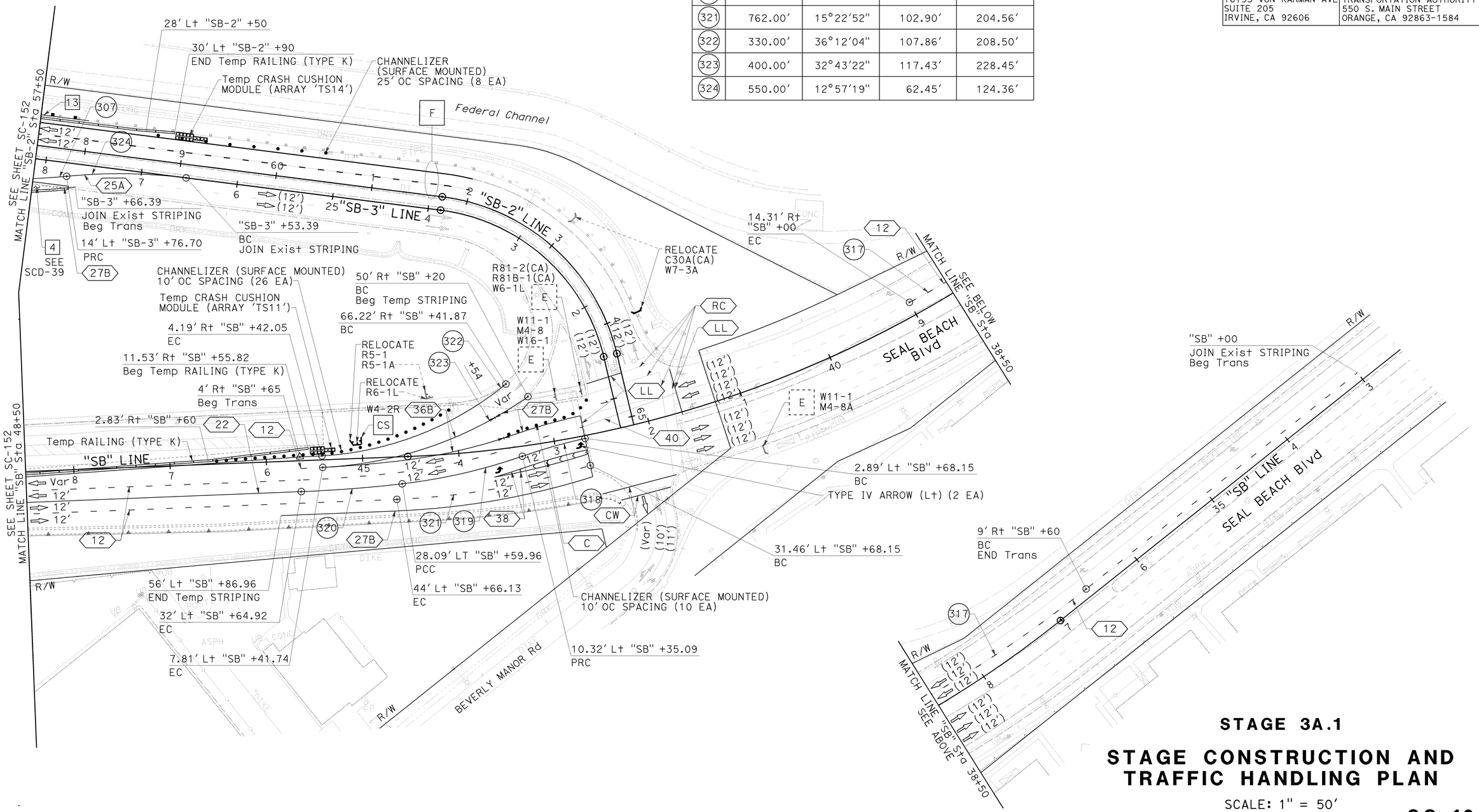

STAGE 3A.1

STAGE CONSTRUCTION AND TRAFFIC HANDLING PLAN

SCALE: 1" = 50′

SC-164

THIS PLAN ACCURATE FOR STAGE CONSTRUCTION AND TRAFFIC HANDLING WORK ONLY.

STATE OF CALIFORNIA - DEPARTMENT OF TRANSPORTATION
Caltrans

CONSULTANT FUNCTIONAL SUPERVISOR: LEONARD SEQUEIRA

CALCULATED-DESIGNED BY: KELSIE ANDERSON
CHECKED BY: JULIET SU

REVISED BY: KLA
DATE REVISED: 12/22/09

LAST REVISION DATE PLOTTED => 03-FEB-2010
TIME PLOTTED => 13:13
08-10-09

BORDER LAST REVISED 8/1/2008

RELATIVE BORDER SCALE IS IN INCHES 0 1 2 3

USERNAME => trstrk
DGN FILE => c07163ma164.dgn

CU 12235

EA 071631

Dist	COUNTY	ROUTE	POST MILES TOTAL PROJECT	SHEET No.	TOTAL SHEETS
12	Ora	22,405, 605	R0.3/R0.9, 22.3/24.0,3.0/R1.6	772	1929

REGISTERED CIVIL ENGINEER — 12/22/09 DATE

2-1-10
PLANS APPROVAL DATE

REGISTERED PROFESSIONAL ENGINEER
JULIET SU
No. C56168
Exp.12/31/10
CIVIL
STATE OF CALIFORNIA

THE STATE OF CALIFORNIA OR ITS OFFICERS OR AGENTS SHALL NOT BE RESPONSIBLE FOR THE ACCURACY OR COMPLETENESS OF ELECTRONIC COPIES OF THIS PLAN SHEET.

MTS
16795 VON KARMAN AVE
SUITE 205
IRVINE, CA 92606

ORANGE COUNTY
TRANSPORTATION AUTHORITY
550 S. MAIN STREET
ORANGE, CA 92863-1584

NOTE:

1. FOR COMPLETE RIGHT OF WAY AND ACCURATE ACCESS DATA, SEE RIGHT OF WAY RECORD MAPS AT DISTRICT OFFICE.

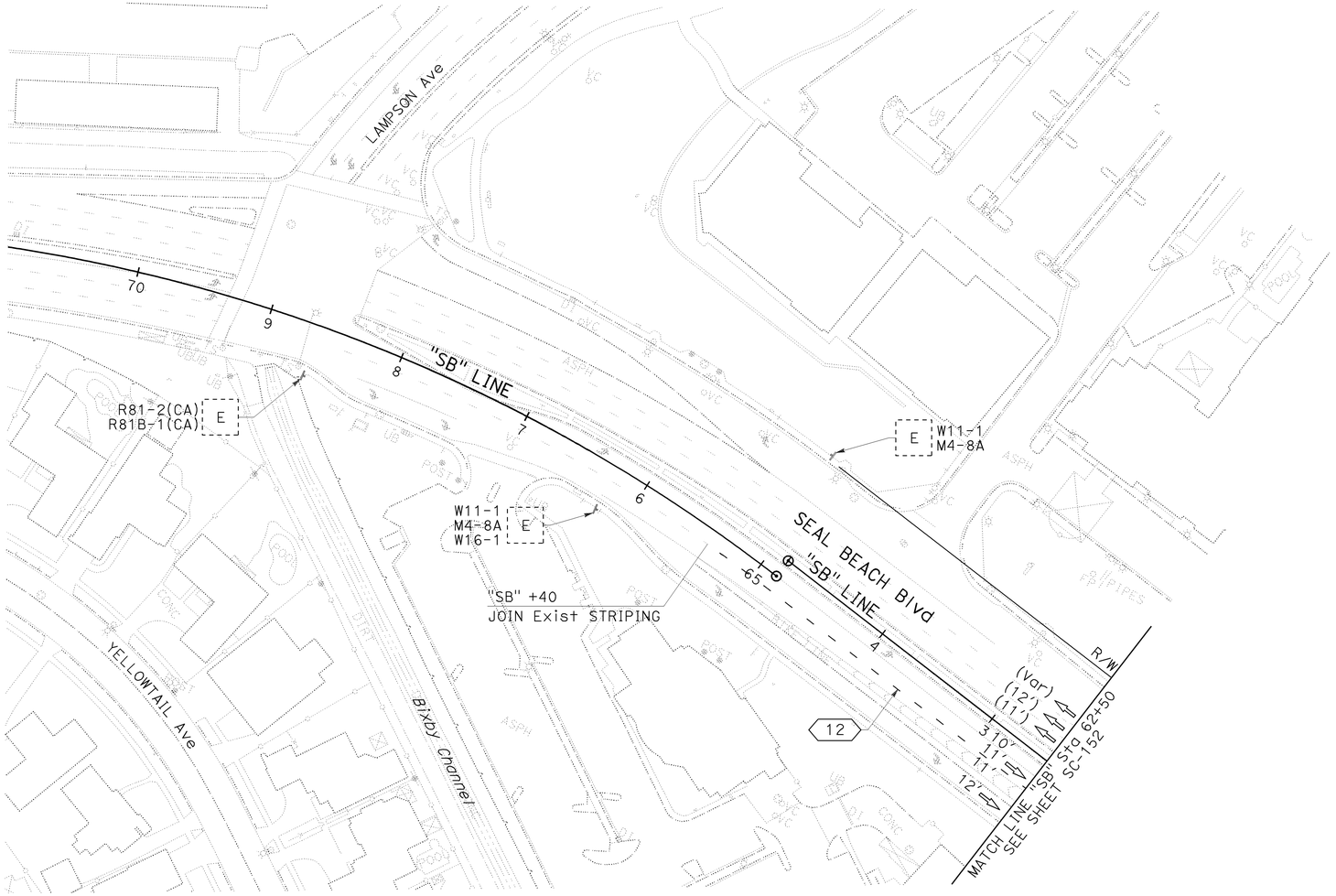

THIS PLAN ACCURATE FOR STAGE CONSTRUCTION AND TRAFFIC HANDLING WORK ONLY.

STAGE 3A.1

STAGE CONSTRUCTION AND TRAFFIC HANDLING PLAN

SCALE: 1" = 50'

SC-165

REVISED BY	DATE REVISED
KLA	12/22/09

CALCULATED-DESIGNED BY: KELSIE ANDERSON
CHECKED BY: JULIET SU
CONSULTANT FUNCTIONAL SUPERVISOR: LEONARD SEQUEIRA
STATE OF CALIFORNIA - DEPARTMENT OF TRANSPORTATION
Caltrans

LAST REVISION DATE PLOTTED => 03-FEB-2010
TIME PLOTTED => 13:39
08-10-09

BORDER LAST REVISED 8/1/2008

RELATIVE BORDER SCALE IS IN INCHES 0 1 2 3

USERNAME => trstrk
DGN FILE => c07163ma165.dgn

CU 12235

EA 071631

Dist	COUNTY	ROUTE	POST MILES TOTAL PROJECT	SHEET No.	TOTAL SHEETS
12	Ora	22,405, 605	R0.3/R0.9, 22.3/24.0,3.0/R1.6	773	1929

REGISTERED CIVIL ENGINEER — 12/22/09 DATE

2-1-10 PLANS APPROVAL DATE

JULIET SU No. C56168 Exp.12/31/10 CIVIL — REGISTERED PROFESSIONAL ENGINEER — STATE OF CALIFORNIA

THE STATE OF CALIFORNIA OR ITS OFFICERS OR AGENTS SHALL NOT BE RESPONSIBLE FOR THE ACCURACY OR COMPLETENESS OF ELECTRONIC COPIES OF THIS PLAN SHEET.

MTS
16795 VON KARMAN AVE
SUITE 205
IRVINE, CA 92606

ORANGE COUNTY
TRANSPORTATION AUTHORITY
550 S. MAIN STREET
ORANGE, CA 92863-1584

NOTE:

1. FOR COMPLETE RIGHT OF WAY AND ACCURATE ACCESS DATA, SEE RIGHT OF WAY RECORD MAPS AT DISTRICT OFFICE.

CONSTRUCTION NOTES THIS SHEET:

1 Const PORTION OF SB Pvmt.

2 Const Temp Pvmt. CONSECUTIVE OVERNIGHT LANE CLOSURES REQUIRED.

3 REMOVE AND REUSE Exist GRATE AND PLACE BICYCLE PROOF GRATE. TACK WELD BICYCLE PROOF GRATE. WHEN NO LONGER REQUIRED FOR TEMPORARY TRAFFIC, SALVAGE BICYCLE PROOF GRATE AND REUSE Exist GRATE AT SAME LOCATION. DO NOT TACK WELD REUSED GRATE.

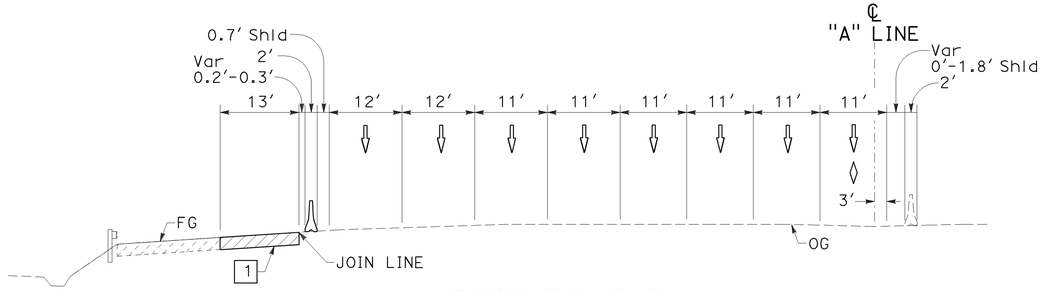

SECTION Q-Q
NO SCALE

CURVE DATA				
No.	R	Δ	T	L
325	200.00′	131°08′02″	440.22′	457.74′

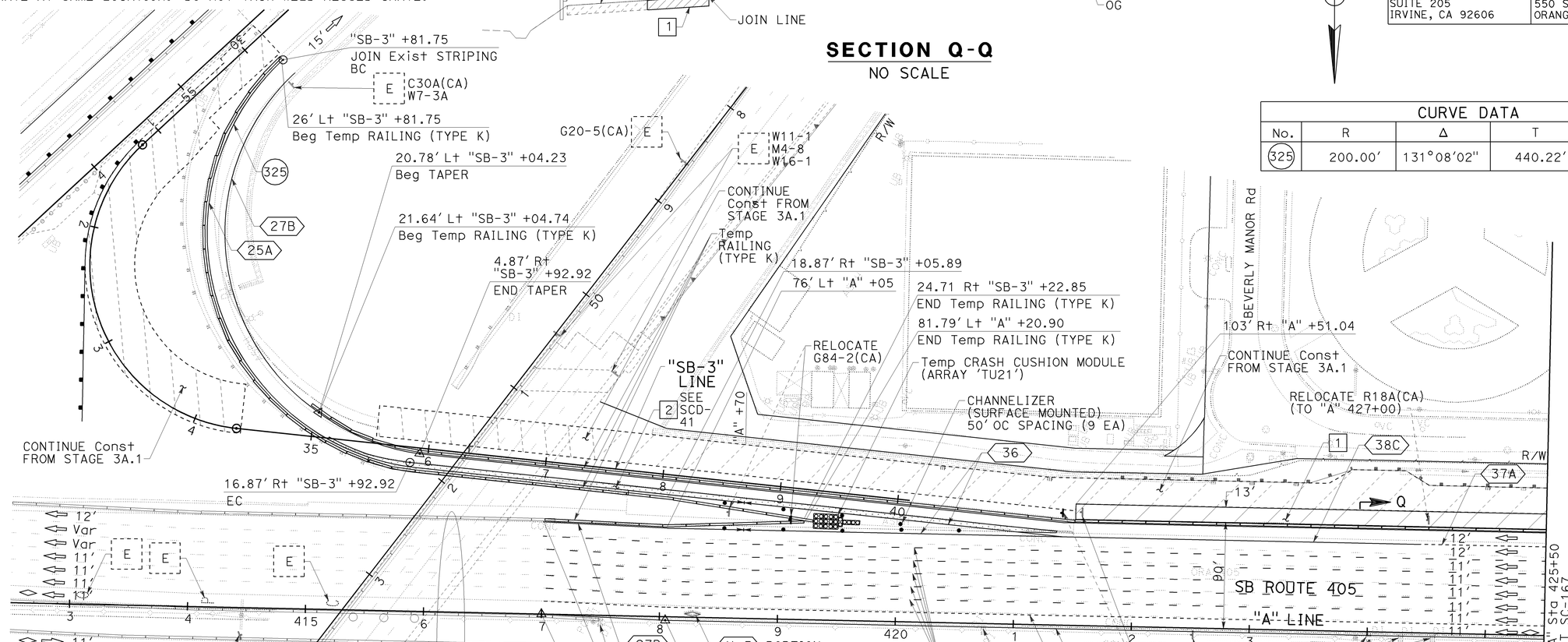

STAGE 3A.2

STAGE CONSTRUCTION AND TRAFFIC HANDLING PLAN

SCALE: 1" = 50′

SC-166

THIS PLAN ACCURATE FOR STAGE CONSTRUCTION AND TRAFFIC HANDLING WORK ONLY.

CALCULATED-DESIGNED BY	CHECKED BY	DRAWN BY	REVISED BY	DATE REVISED
KELSIE ANDERSON	JULIET SU		KLA	12/22/09

CONSULTANT FUNCTIONAL SUPERVISOR: LEONARD SEGUEIRA

STATE OF CALIFORNIA - DEPARTMENT OF TRANSPORTATION

Caltrans

LAST REVISION | DATE PLOTTED => 03-FEB-2010 | TIME PLOTTED => 13:13 | 08-10-09

BORDER LAST REVISED 8/1/2008 | RELATIVE BORDER SCALE IS IN INCHES 0 1 2 3 | USERNAME => trstrk | DGN FILE => c07163ma166.dgn | CU 12235 | EA 071631

Dist	COUNTY	ROUTE	POST MILES TOTAL PROJECT	SHEET No.	TOTAL SHEETS
12	Ora	22,405, 605	R0.3/R0.9, 22.3/24.0,3.0/R1.6	774	1929

REGISTERED CIVIL ENGINEER — 12/22/09 DATE

2-1-10
PLANS APPROVAL DATE

REGISTERED PROFESSIONAL ENGINEER — JULIET SU No. C56168 Exp.12/31/10 CIVIL — STATE OF CALIFORNIA

THE STATE OF CALIFORNIA OR ITS OFFICERS OR AGENTS SHALL NOT BE RESPONSIBLE FOR THE ACCURACY OR COMPLETENESS OF ELECTRONIC COPIES OF THIS PLAN SHEET.

MTS 16795 VON KARMAN AVE SUITE 205 IRVINE, CA 92606	ORANGE COUNTY TRANSPORTATION AUTHORITY 550 S. MAIN STREET ORANGE, CA 92863-1584

NOTE:

1. FOR COMPLETE RIGHT OF WAY AND ACCURATE ACCESS DATA, SEE RIGHT OF WAY RECORD MAPS AT DISTRICT OFFICE.

CONSTRUCTION NOTES THIS SHEET:

1 Const PORTION OF SB Pvmt.

3 REMOVE AND REUSE Exist GRATE AND PLACE BICYCLE PROOF GRATE. TACK WELD BICYCLE PROOF GRATE. WHEN NO LONGER REQUIRED FOR TEMPORARY TRAFFIC, SALVAGE BICYCLE PROOF GRATE AND REUSE Exist GRATE AT SAME LOCATION. DO NOT TACK WELD REUSED GRATE.

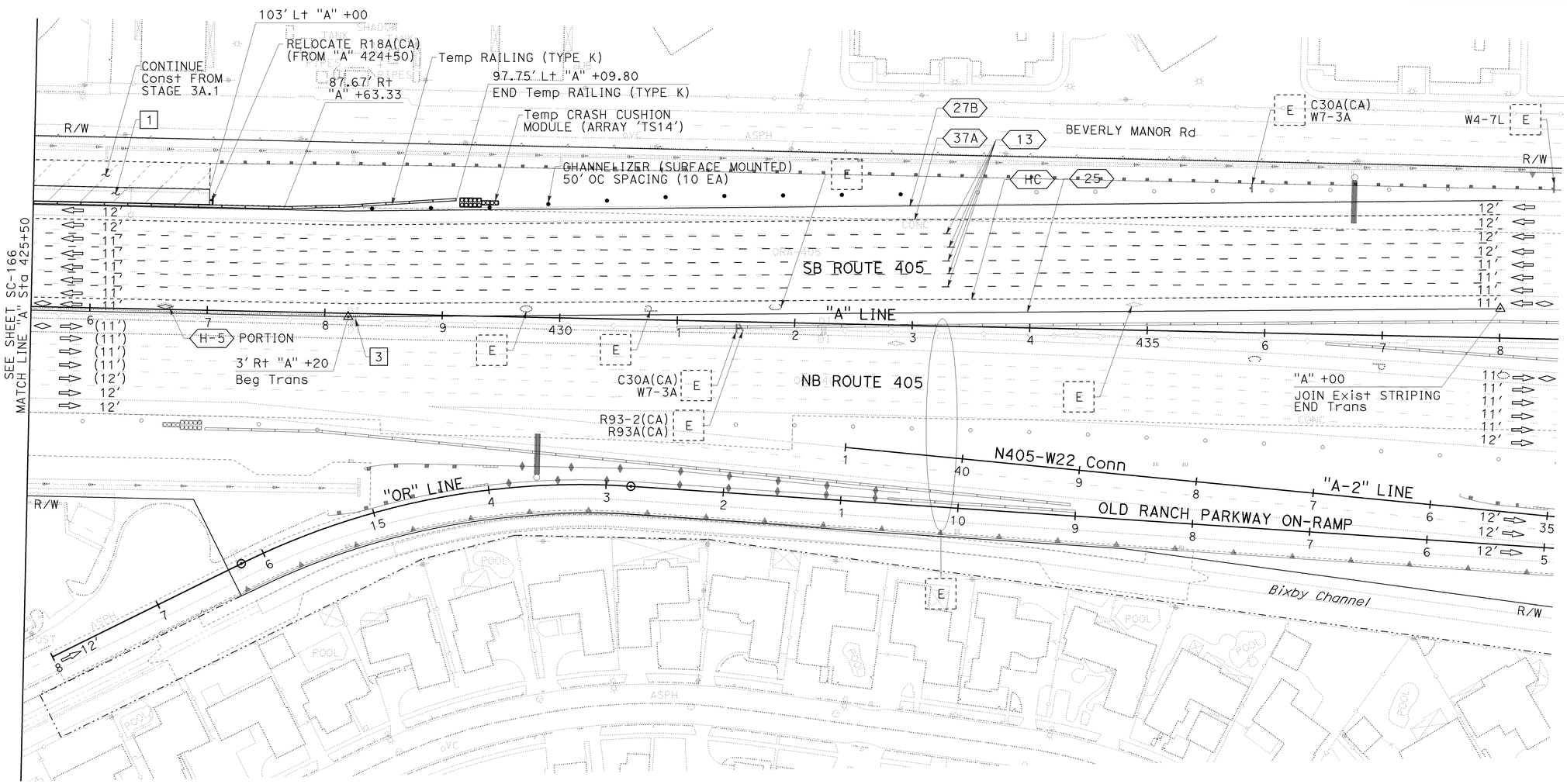

STAGE 3A.2

STAGE CONSTRUCTION AND TRAFFIC HANDLING PLAN

SCALE: 1" = 50'

SC-167

THIS PLAN ACCURATE FOR STAGE CONSTRUCTION AND TRAFFIC HANDLING WORK ONLY.

STATE OF CALIFORNIA - DEPARTMENT OF TRANSPORTATION — Caltrans

CONSULTANT FUNCTIONAL SUPERVISOR: LEONARD SEQUEIRA

CALCULATED-DESIGNED BY: KELSIE ANDERSON
CHECKED BY: JULIET SU

REVISED BY	DATE REVISED
KLA	12/22/09

LAST REVISION DATE PLOTTED => 03-FEB-2010
08-10-09 TIME PLOTTED => 13:13

BORDER LAST REVISED 8/1/2008 — RELATIVE BORDER SCALE IS IN INCHES 0 1 2 3 — USERNAME => trstrk — DGN FILE => c07163ma167.dgn — CU 12235 — EA 071631

NOTE:

1. FOR COMPLETE RIGHT OF WAY AND ACCURATE ACCESS DATA, SEE RIGHT OF WAY RECORD MAPS AT DISTRICT OFFICE.

CONSTRUCTION NOTE THIS SHEET:

1 Const PORTION OF NB Pvmt.

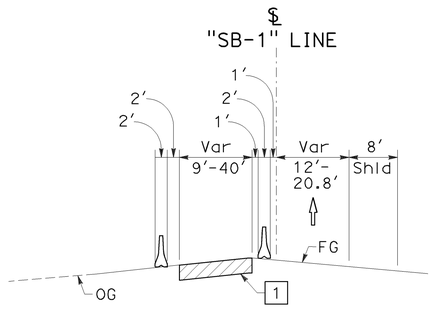

SECTION A-A

NO SCALE

Dist	COUNTY	ROUTE	POST MILES TOTAL PROJECT	SHEET No.	TOTAL SHEETS
12	Ora	22,405, 605	R0.3/R0.9, 22.3/24.0,3.0/R1.6	775	1929

REGISTERED CIVIL ENGINEER — 12/22/09 DATE

2-1-10 PLANS APPROVAL DATE

REGISTERED PROFESSIONAL ENGINEER — JULIET SU No. C56168 Exp.12/31/10 CIVIL — STATE OF CALIFORNIA

THE STATE OF CALIFORNIA OR ITS OFFICERS OR AGENTS SHALL NOT BE RESPONSIBLE FOR THE ACCURACY OR COMPLETENESS OF ELECTRONIC COPIES OF THIS PLAN SHEET.

MTS
16795 VON KARMAN AVE
SUITE 205
IRVINE, CA 92606

ORANGE COUNTY
TRANSPORTATION AUTHORITY
550 S. MAIN STREET
ORANGE, CA 92863-1584

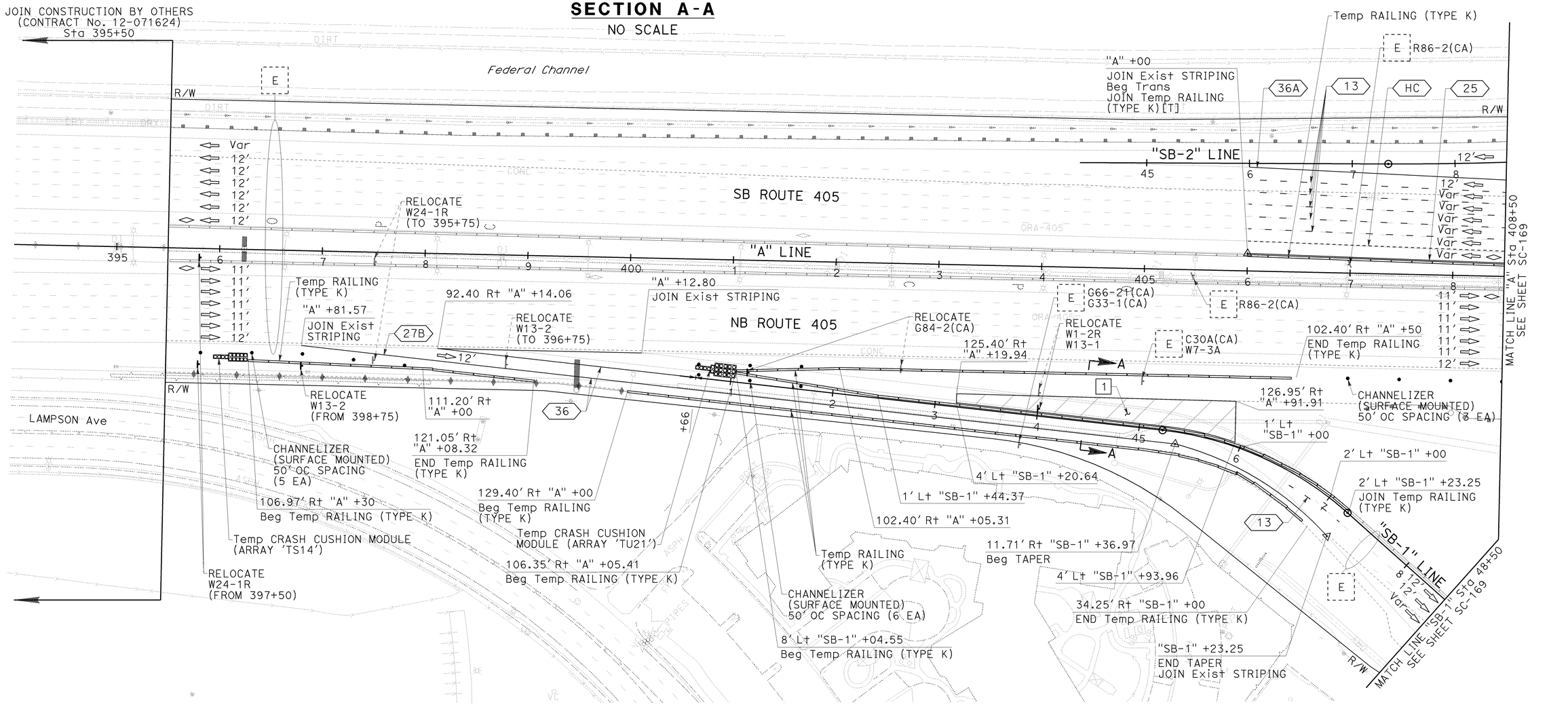

STAGE 3B

STAGE CONSTRUCTION AND TRAFFIC HANDLING PLAN

SCALE; 1" = 50'

SC-168

THIS PLAN ACCURATE FOR STAGE CONSTRUCTION AND TRAFFIC HANDLING WORK ONLY.

REVISED BY	DATE REVISED
KLA	12/22/09

CALCULATED-DESIGNED BY: KELSIE ANDERSON
CHECKED BY: JULIET SU
CONSULTANT FUNCTIONAL SUPERVISOR: LEONARD SEQUEIRA
STATE OF CALIFORNIA - DEPARTMENT OF TRANSPORTATION

LAST REVISION DATE PLOTTED => 03-FEB-2010
08-10-09 TIME PLOTTED => 14:12

BORDER LAST REVISED 8/1/2008 | RELATIVE BORDER SCALE IS IN INCHES 0 1 2 3 | USERNAME => trcarol DGN FILE => c07163ma168.dgn | CU 12235 | EA 071631

NOTES:

1. FOR COMPLETE RIGHT OF WAY AND ACCURATE ACCESS DATA, SEE RIGHT OF WAY RECORD MAPS AT DISTRICT OFFICE.
2. SEE SHEET SC-170 FOR SECTIONS B-B, C-C, AND D-D.

CONSTRUCTION NOTES THIS SHEET:

1 Const PORTION OF NB Pvmt.
2 Const PORTION OF "SB-3" LINE.
3 Const PORTION OF Br No. 55-1099. SEE STRUCTURE PLANS.
4 Const Temp Pvmt. CONSECUTIVE OVERNIGHT LANE CLOSURES REQUIRED.
5 Const Temp Pvmt.
6 PLACE SURCHARGE.
10 Const DRAINAGE SYSTEM. SEE DRAINAGE PLANS.
11 RECONSTRUCT MAINLINE ELEMENTS IMPACTED BY Br Const.
12 Const CROSS GUTTER AT NIGHT. CONSECUTIVE OVERNIGHT LANE CLOSURES REQUIRED.

CURVE DATA

No.	R	Δ	T	L
326	132.00′	131°07′59"	290.54′	302.11′
327	1,012.00′	07°51′25"	69.50′	138.77′
328	1,012.00′	01°33′38"	13.78′	27.56′
329	1,000.00′	09°44′50"	85.27′	170.12′
330	538.00′	15°06′14"	74.51′	148.15′
331	562.00′	15°06′14"	71.33′	141.82′

Dist	COUNTY	ROUTE	POST MILES TOTAL PROJECT	SHEET No.	TOTAL SHEETS
12	Ora	22,405, 605	R0.3/R0.9, 22.3/24.0,3.0/R1.6	776	1929

REGISTERED CIVIL ENGINEER — 12/22/09 DATE

2-1-10 PLANS APPROVAL DATE

REGISTERED PROFESSIONAL ENGINEER — JULIET SU No. C56168 Exp.12/31/10 CIVIL — STATE OF CALIFORNIA

THE STATE OF CALIFORNIA OR ITS OFFICERS OR AGENTS SHALL NOT BE RESPONSIBLE FOR THE ACCURACY OR COMPLETENESS OF ELECTRONIC COPIES OF THIS PLAN SHEET.

MTS
16795 VON KARMAN AVE
SUITE 205
IRVINE, CA 92606

ORANGE COUNTY
TRANSPORTATION AUTHORITY
550 S. MAIN STREET
ORANGE, CA 92863-1584

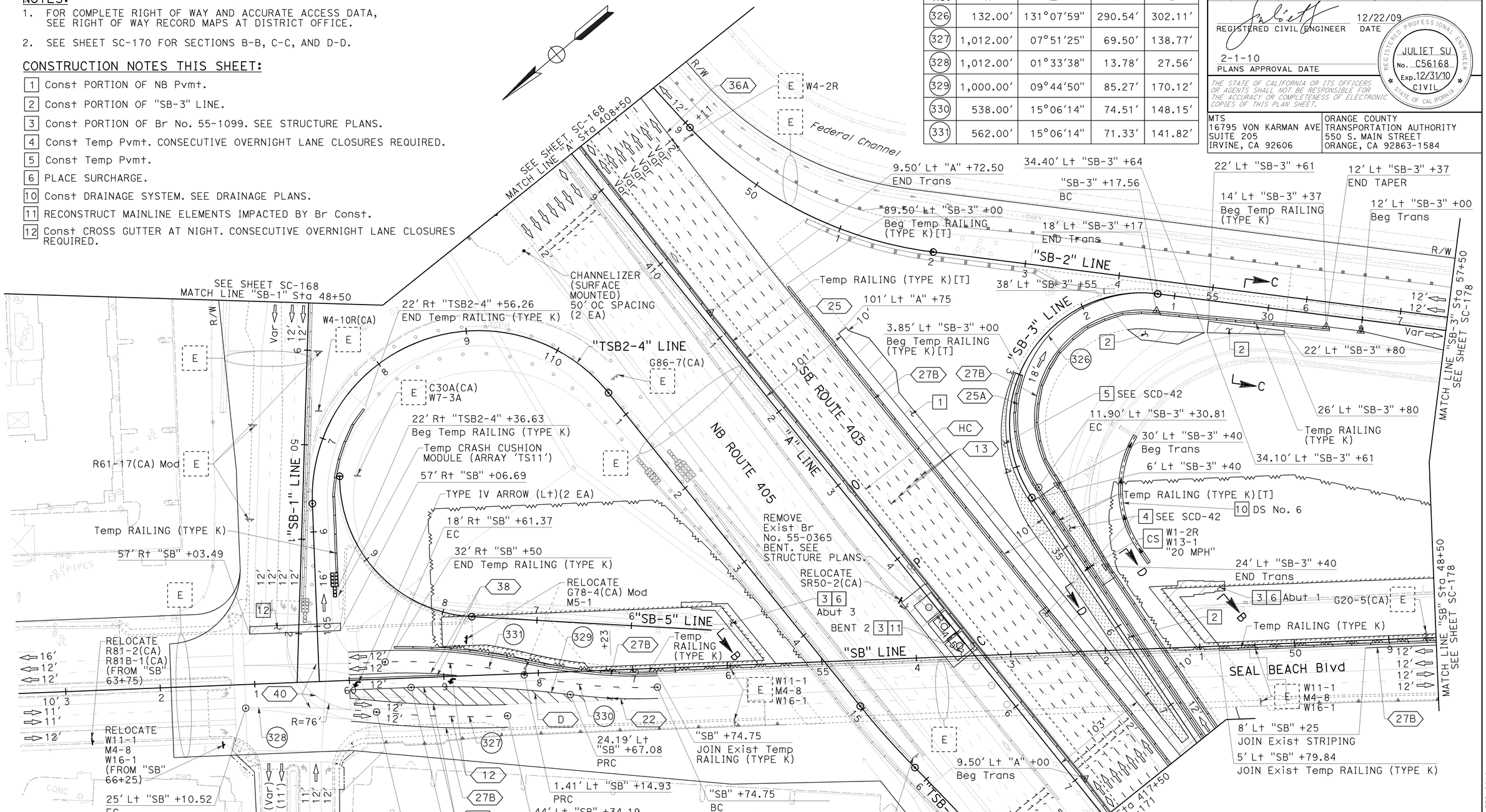

STAGE 3B

STAGE CONSTRUCTION AND TRAFFIC HANDLING PLAN

SCALE: 1" = 50′

SC-169

THIS PLAN ACCURATE FOR STAGE CONSTRUCTION AND TRAFFIC HANDLING WORK ONLY.

STATE OF CALIFORNIA - DEPARTMENT OF TRANSPORTATION
CONSULTANT FUNCTIONAL SUPERVISOR: LEONARD SEQUEIRA
CALCULATED-DESIGNED BY: KELSIE ANDERSON
CHECKED BY: JULIET SU
REVISED BY: KLA
DATE REVISED: 12/22/09
LAST REVISION DATE PLOTTED => 03-FEB-2010
TIME PLOTTED => 14:12

BORDER LAST REVISED 8/1/2008
RELATIVE BORDER SCALE IS IN INCHES 0 1 2 3
USERNAME => trcarol
DGN FILE => c07163ma169.dgn
CU 12235
EA 071631

Dist	COUNTY	ROUTE	POST MILES TOTAL PROJECT	SHEET No.	TOTAL SHEETS
12	Ora	22,405, 605	R0.3/R0.9, 22.3/24.0,3.0/R1.6	777	1929

REGISTERED CIVIL ENGINEER — 12/22/09 DATE

2-1-10
PLANS APPROVAL DATE

REGISTERED PROFESSIONAL ENGINEER
JULIET SU
No. C56168
Exp.12/31/10
CIVIL
STATE OF CALIFORNIA

THE STATE OF CALIFORNIA OR ITS OFFICERS OR AGENTS SHALL NOT BE RESPONSIBLE FOR THE ACCURACY OR COMPLETENESS OF ELECTRONIC COPIES OF THIS PLAN SHEET.

MTS
16795 VON KARMAN AVE
SUITE 205
IRVINE, CA 92606

ORANGE COUNTY
TRANSPORTATION AUTHORITY
550 S. MAIN STREET
ORANGE, CA 92863-1584

CONSTRUCTION NOTES THIS SHEET:

1 Const PORTION OF NB Pvmt.
2 Const PORTION OF "SB-3" LINE.
3 Const PORTION OF Br No. 55-1099. SEE STRUCTURE PLANS.
4 Const Temp Pvmt. CONSECUTIVE OVERNIGHT LANE CLOSURES REQUIRED.
5 Const Temp Pvmt.
6 PLACE SURCHARGE.

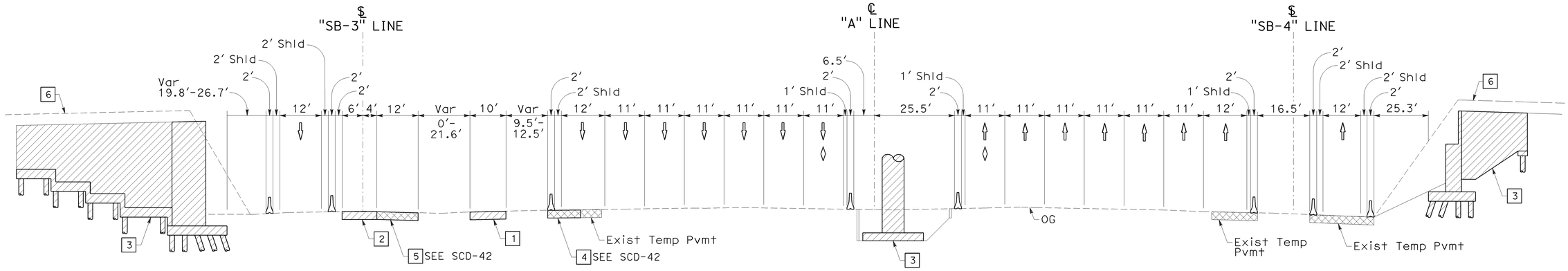

SECTION B-B

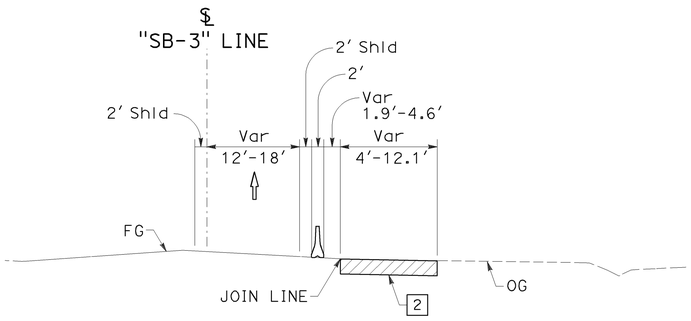

SECTION C-C

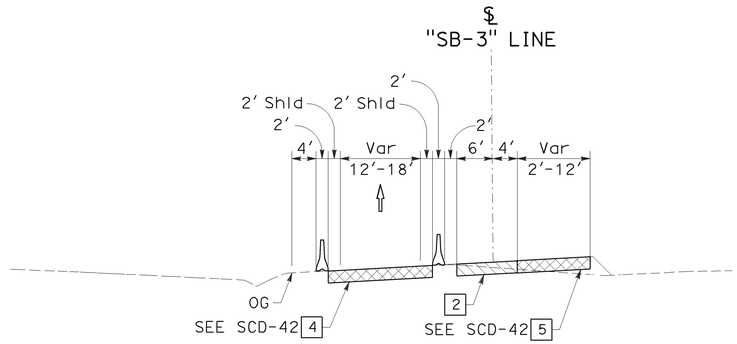

SECTION D-D

STAGE 3B

STAGE CONSTRUCTION AND TRAFFIC HANDLING PLAN

NO SCALE

SC-170

THIS PLAN ACCURATE FOR STAGE CONSTRUCTION AND TRAFFIC HANDLING WORK ONLY.

REVISED BY	DATE REVISED
KLA	12/22/09

CALCULATED-DESIGNED BY: KELSIE ANDERSON
CHECKED BY: JULIET SU
CONSULTANT FUNCTIONAL SUPERVISOR: LEONARD SEQUEIRA
STATE OF CALIFORNIA - DEPARTMENT OF TRANSPORTATION
Caltrans

LAST REVISION DATE PLOTTED => 03-FEB-2010
08-10-09 TIME PLOTTED => 14:12

BORDER LAST REVISED 8/1/2008
RELATIVE BORDER SCALE IS IN INCHES 0 1 2 3
USERNAME => trcarol
DGN FILE => c07163ma170.dgn
CU 12235
EA 071631

Dist	COUNTY	ROUTE	POST MILES TOTAL PROJECT	SHEET No.	TOTAL SHEETS
12	Ora	22,405, 605	R0.3/R0.9, 22.3/24.0,3.0/R1.6	778	1929

REGISTERED CIVIL ENGINEER — 12/22/09 DATE

2-1-10 PLANS APPROVAL DATE

REGISTERED PROFESSIONAL ENGINEER — JULIET SU No. C56168 Exp.12/31/10 CIVIL — STATE OF CALIFORNIA

THE STATE OF CALIFORNIA OR ITS OFFICERS OR AGENTS SHALL NOT BE RESPONSIBLE FOR THE ACCURACY OR COMPLETENESS OF ELECTRONIC COPIES OF THIS PLAN SHEET.

MTS
16795 VON KARMAN AVE
SUITE 205
IRVINE, CA 92606

ORANGE COUNTY
TRANSPORTATION AUTHORITY
550 S. MAIN STREET
ORANGE, CA 92863-1584

NOTE:

1. FOR COMPLETE RIGHT OF WAY AND ACCURATE ACCESS DATA, SEE RIGHT OF WAY RECORD MAPS AT DISTRICT OFFICE.

CONSTRUCTION NOTES THIS SHEET:

1 Const PORTION OF NB Pvmt.

2 Const PORTION OF "SB-3" LINE.

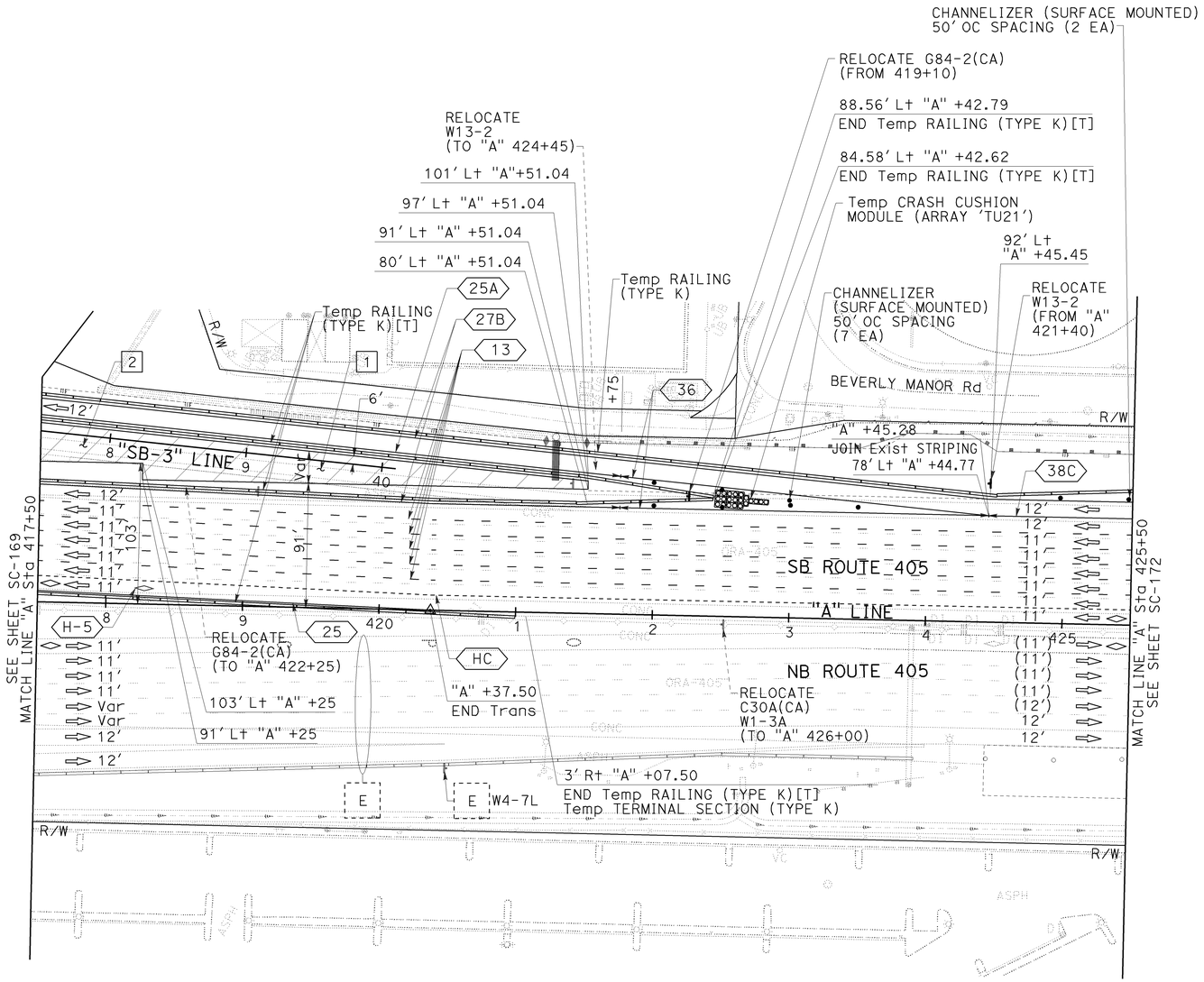

STAGE 3B

STAGE CONSTRUCTION AND TRAFFIC HANDLING PLAN

SCALE: 1" = 50'

SC-171

THIS PLAN ACCURATE FOR STAGE CONSTRUCTION AND TRAFFIC HANDLING WORK ONLY.

REVISED BY	DATE REVISED
KLA	12/22/09

CALCULATED-DESIGNED BY: KELSIE ANDERSON
CHECKED BY: JULIET SU
CONSULTANT FUNCTIONAL SUPERVISOR: LEONARD SEQUEIRA
STATE OF CALIFORNIA - DEPARTMENT OF TRANSPORTATION
Caltrans

LAST REVISION DATE PLOTTED => 03-FEB-2010
08-10-09 TIME PLOTTED => 14:12

NOTE:

1. FOR COMPLETE RIGHT OF WAY AND ACCURATE ACCESS DATA, SEE RIGHT OF WAY RECORD MAPS AT DISTRICT OFFICE.

Dist	COUNTY	ROUTE	POST MILES TOTAL PROJECT	SHEET No.	TOTAL SHEETS
12	Ora	22,405, 605	R0.3/R0.9, 22.3/24.0,3.0/R1.6	779	1929

REGISTERED CIVIL ENGINEER — 12/22/09 DATE

2-1-10
PLANS APPROVAL DATE

REGISTERED PROFESSIONAL ENGINEER
JULIET SU
No. C56168
Exp.12/31/10
CIVIL
STATE OF CALIFORNIA

THE STATE OF CALIFORNIA OR ITS OFFICERS OR AGENTS SHALL NOT BE RESPONSIBLE FOR THE ACCURACY OR COMPLETENESS OF ELECTRONIC COPIES OF THIS PLAN SHEET.

MTS 16795 VON KARMAN AVE SUITE 205 IRVINE, CA 92606	ORANGE COUNTY TRANSPORTATION AUTHORITY 550 S. MAIN STREET ORANGE, CA 92863-1584

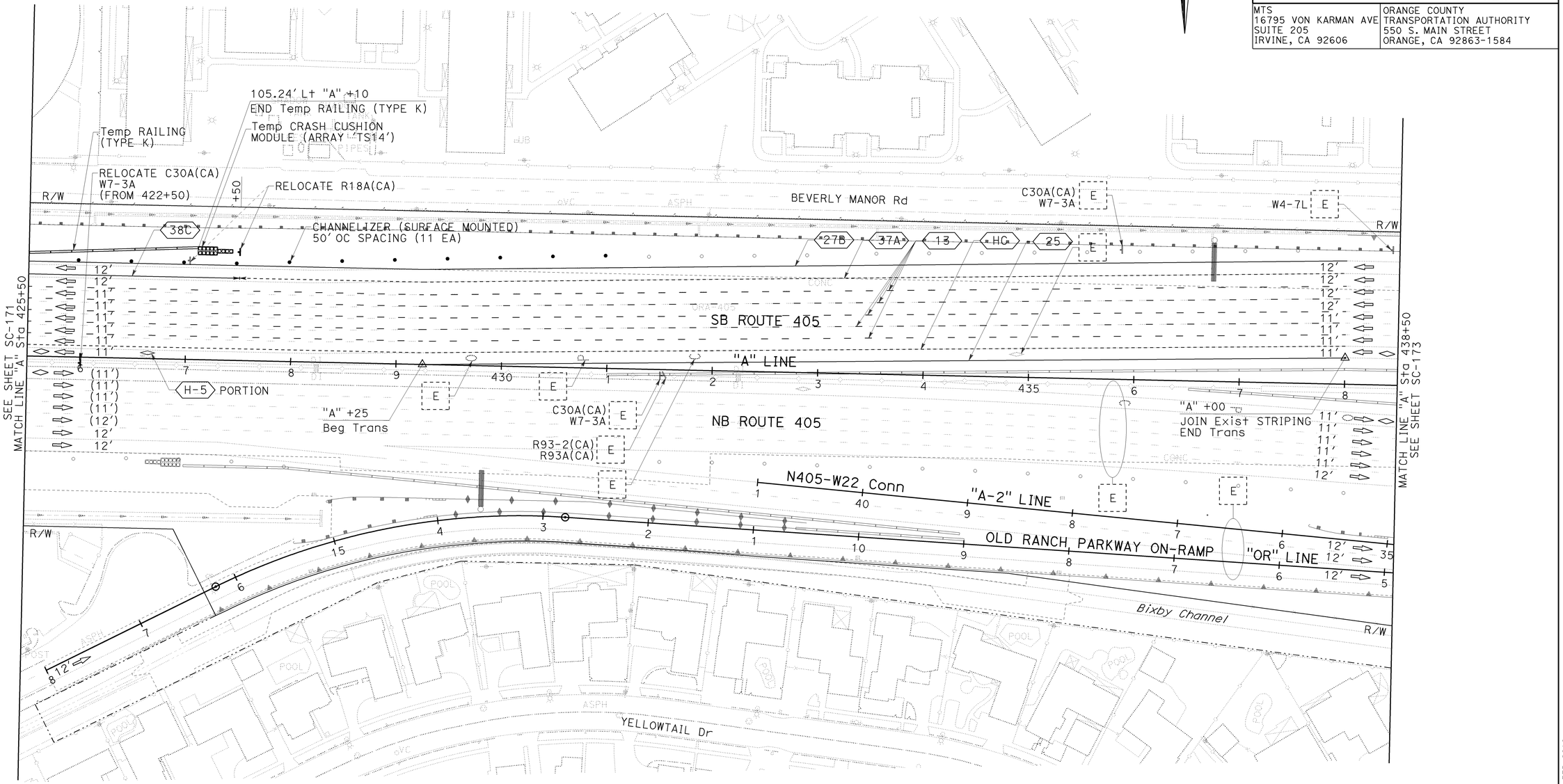

STAGE 3B

STAGE CONSTRUCTION AND TRAFFIC HANDLING PLAN

SCALE: 1" = 50'

SC-172

THIS PLAN ACCURATE FOR STAGE CONSTRUCTION AND TRAFFIC HANDLING WORK ONLY.

REVISED BY	DATE REVISED
KLA	12/22/09

CALCULATED-DESIGNED BY	CHECKED BY
KELSIE ANDERSON	JULIET SU

CONSULTANT FUNCTIONAL SUPERVISOR: LEONARD SEQUEIRA

STATE OF CALIFORNIA - DEPARTMENT OF TRANSPORTATION

Caltrans

LAST REVISION: DATE PLOTTED => 03-FEB-2010 08-10-09 TIME PLOTTED => 14:12

BORDER LAST REVISED 8/1/2008 | RELATIVE BORDER SCALE IS IN INCHES 0 1 2 3 | USERNAME => trcarol DGN FILE => c07163ma172.dgn | CU 12235 | EA 071631

Dist	COUNTY	ROUTE	POST MILES TOTAL PROJECT	SHEET No.	TOTAL SHEETS
12	Ora	22,405, 605	R0.3/R0.9, 22.3/24.0,3.0/R1.6	780	1929

REGISTERED CIVIL ENGINEER — 12/22/09 DATE

2-1-10
PLANS APPROVAL DATE

REGISTERED PROFESSIONAL ENGINEER
JULIET SU
No. C56168
Exp.12/31/10
CIVIL
STATE OF CALIFORNIA

THE STATE OF CALIFORNIA OR ITS OFFICERS OR AGENTS SHALL NOT BE RESPONSIBLE FOR THE ACCURACY OR COMPLETENESS OF ELECTRONIC COPIES OF THIS PLAN SHEET.

MTS
16795 VON KARMAN AVE
SUITE 205
IRVINE, CA 92606

ORANGE COUNTY
TRANSPORTATION AUTHORITY
550 S. MAIN STREET
ORANGE, CA 92863-1584

NOTE:

1. FOR COMPLETE RIGHT OF WAY AND ACCURATE ACCESS DATA, SEE RIGHT OF WAY RECORD MAPS AT DISTRICT OFFICE.

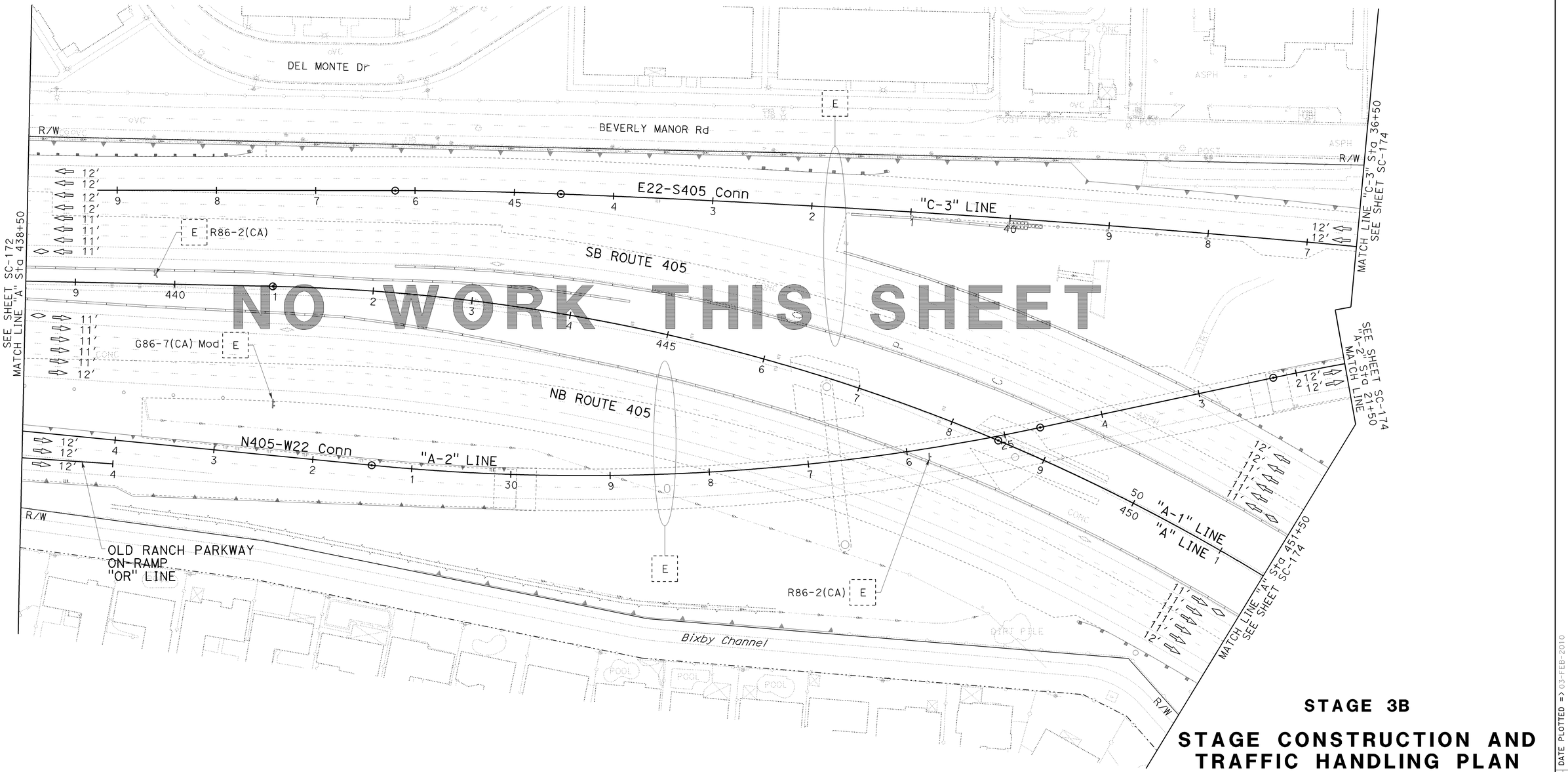

NO WORK THIS SHEET

STAGE 3B

STAGE CONSTRUCTION AND TRAFFIC HANDLING PLAN

SCALE: 1" = 50'

SC-173

THIS PLAN ACCURATE FOR STAGE CONSTRUCTION AND TRAFFIC HANDLING WORK ONLY.

STATE OF CALIFORNIA - DEPARTMENT OF TRANSPORTATION
Caltrans

CONSULTANT FUNCTIONAL SUPERVISOR: LEONARD SEQUEIRA

CALCULATED-DESIGNED BY: KELSIE ANDERSON
CHECKED BY: JULIET SU

REVISED BY: KLA
DATE REVISED: 12/22/09

LAST REVISION
DATE PLOTTED => 03-FEB-2010
TIME PLOTTED => 14:13
08-10-09

BORDER LAST REVISED 8/1/2008

RELATIVE BORDER SCALE IS IN INCHES 0 1 2 3

USERNAME => trcarol
DGN FILE => c07163ma173.dgn

CU 12235

EA 071631

Dist	COUNTY	ROUTE	POST MILES TOTAL PROJECT	SHEET No.	TOTAL SHEETS
12	Ora	22,405, 605	R0.3/R0.9, 22.3/24.0,3.0/R1.6	781	1929

REGISTERED CIVIL ENGINEER — 12/22/09 DATE

2-1-10
PLANS APPROVAL DATE

REGISTERED PROFESSIONAL ENGINEER
JULIET SU
No. C56168
Exp.12/31/10
CIVIL
STATE OF CALIFORNIA

THE STATE OF CALIFORNIA OR ITS OFFICERS OR AGENTS SHALL NOT BE RESPONSIBLE FOR THE ACCURACY OR COMPLETENESS OF ELECTRONIC COPIES OF THIS PLAN SHEET.

MTS
16795 VON KARMAN AVE
SUITE 205
IRVINE, CA 92606

ORANGE COUNTY
TRANSPORTATION AUTHORITY
550 S. MAIN STREET
ORANGE, CA 92863-1584

NOTE:

1. FOR COMPLETE RIGHT OF WAY AND ACCURATE ACCESS DATA, SEE RIGHT OF WAY RECORD MAPS AT DISTRICT OFFICE.

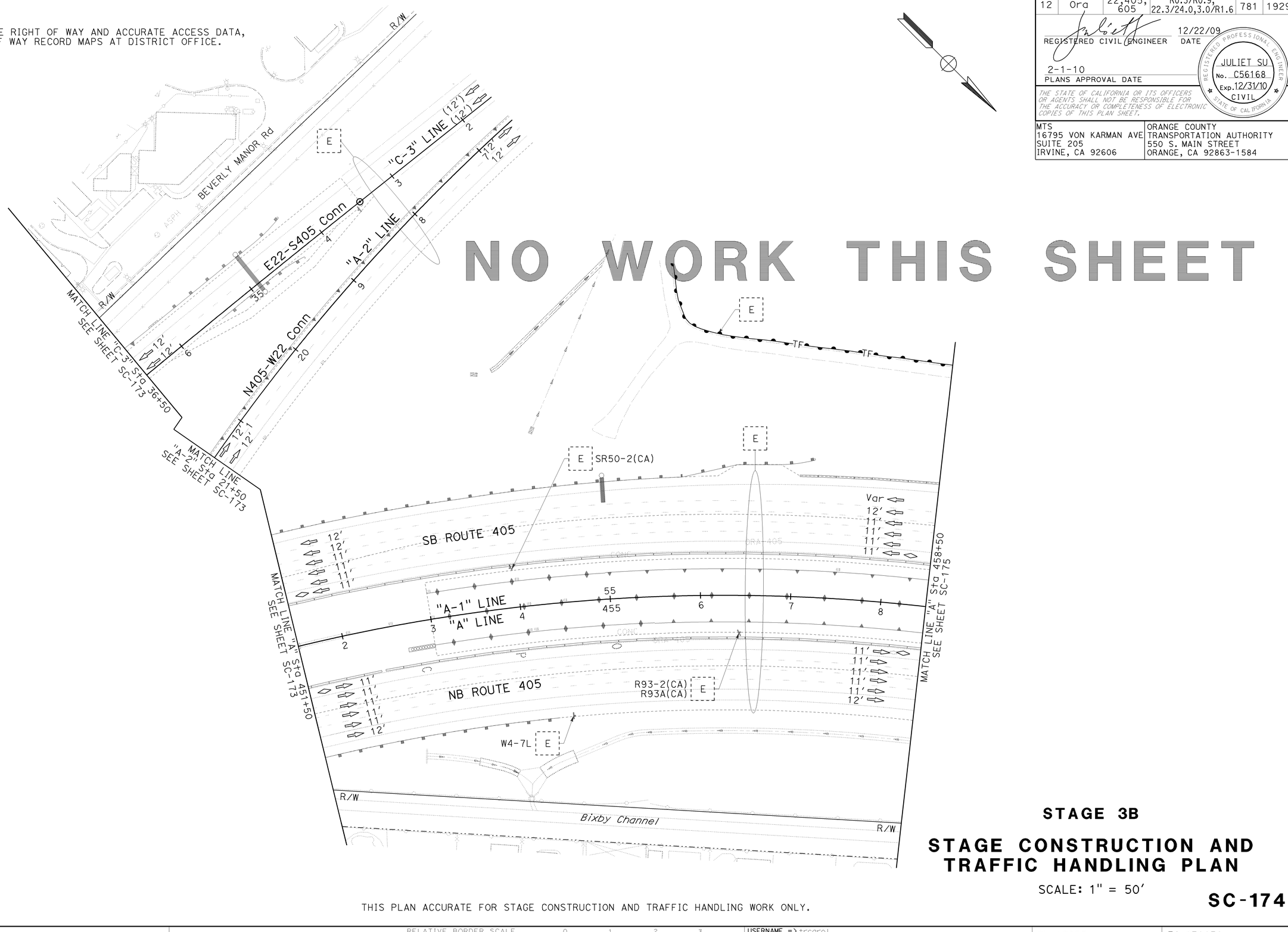

THIS PLAN ACCURATE FOR STAGE CONSTRUCTION AND TRAFFIC HANDLING WORK ONLY.

STAGE 3B

STAGE CONSTRUCTION AND TRAFFIC HANDLING PLAN

SCALE: 1" = 50'

SC-174

REVISED BY	DATE REVISED
KLA	12/22/09

CALCULATED-DESIGNED BY: KELSIE ANDERSON
CHECKED BY: JULIET SU
CONSULTANT FUNCTIONAL SUPERVISOR: LEONARD SEQUEIRA
STATE OF CALIFORNIA - DEPARTMENT OF TRANSPORTATION
Caltrans

LAST REVISION DATE PLOTTED => 03-FEB-2010
TIME PLOTTED => 14:13
08-10-09

BORDER LAST REVISED 8/1/2008 | RELATIVE BORDER SCALE IS IN INCHES 0 1 2 3 | USERNAME => trcarol DGN FILE => c07163ma174.dgn | CU 12235 | EA 071631

Dist	COUNTY	ROUTE	POST MILES TOTAL PROJECT	SHEET No.	TOTAL SHEETS
12	Ora	22,405, 605	R0.3/R0.9, 22.3/24.0,3.0/R1.6	782	1929

REGISTERED CIVIL ENGINEER — 12/22/09 DATE

JULIET SU No. C56168 Exp.12/31/10 CIVIL — REGISTERED PROFESSIONAL ENGINEER — STATE OF CALIFORNIA

2-1-10
PLANS APPROVAL DATE

THE STATE OF CALIFORNIA OR ITS OFFICERS OR AGENTS SHALL NOT BE RESPONSIBLE FOR THE ACCURACY OR COMPLETENESS OF ELECTRONIC COPIES OF THIS PLAN SHEET.

MTS
16795 VON KARMAN AVE
SUITE 205
IRVINE, CA 92606

ORANGE COUNTY
TRANSPORTATION AUTHORITY
550 S. MAIN STREET
ORANGE, CA 92863-1584

NOTE:

1. FOR COMPLETE RIGHT OF WAY AND ACCURATE ACCESS DATA, SEE RIGHT OF WAY RECORD MAPS AT DISTRICT OFFICE.

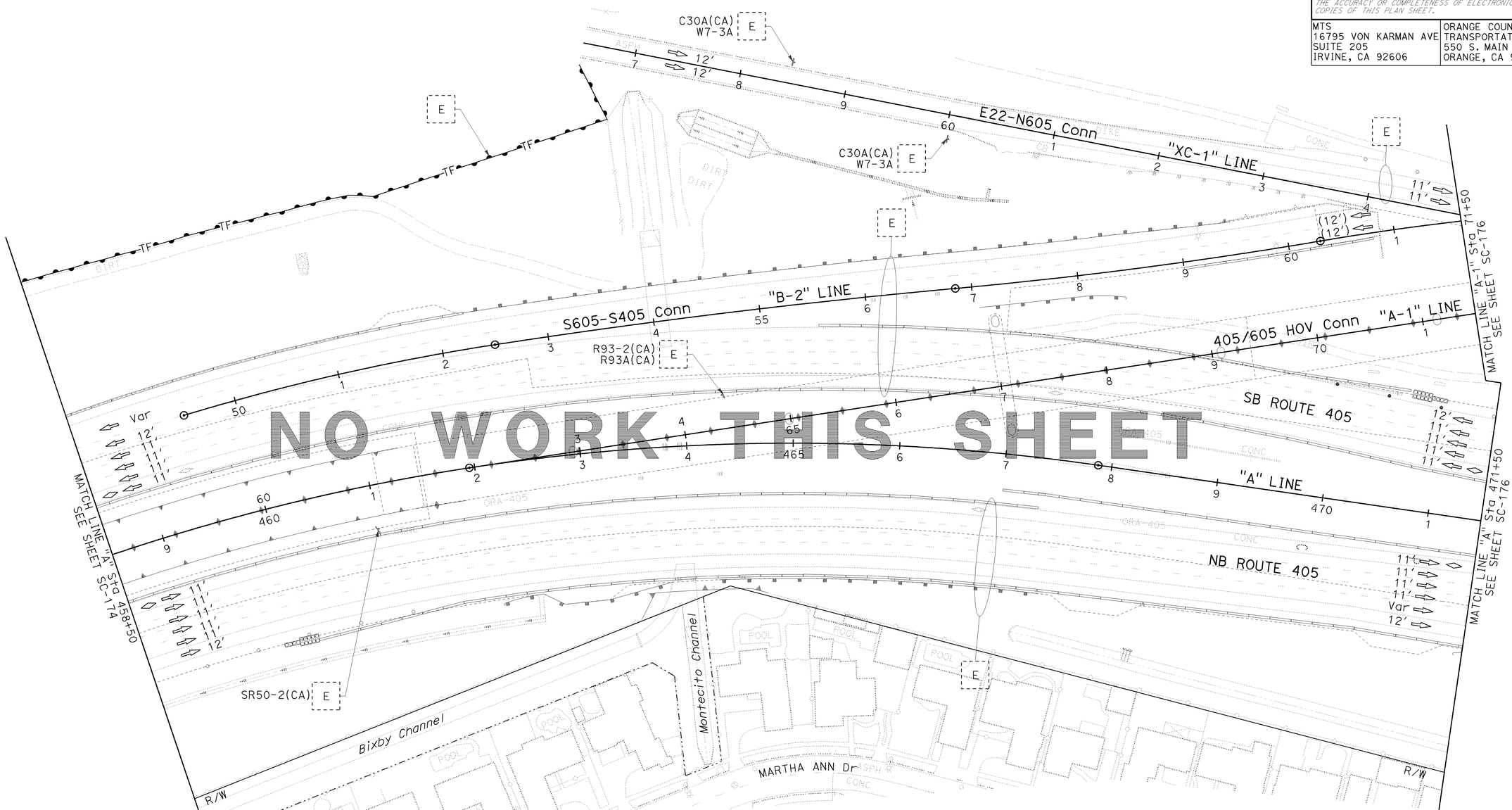

STAGE 3B

STAGE CONSTRUCTION AND TRAFFIC HANDLING PLAN

SCALE: 1" = 50'

SC-175

THIS PLAN ACCURATE FOR STAGE CONSTRUCTION AND TRAFFIC HANDLING WORK ONLY.

CALCULATED-DESIGNED BY	KELSIE ANDERSON	
CHECKED BY	JULIET SU	
REVISED BY	KLA	
DATE REVISED	12/22/09	
CONSULTANT FUNCTIONAL SUPERVISOR	LEONARD SEQUEIRA	
STATE OF CALIFORNIA - DEPARTMENT OF TRANSPORTATION	Caltrans	

LAST REVISION DATE PLOTTED => 03-FEB-2010
08-10-09 TIME PLOTTED => 14:13

BORDER LAST REVISED 8/1/2008 | RELATIVE BORDER SCALE IS IN INCHES 0 1 2 3 | USERNAME => trcarol DGN FILE => c07163ma175.dgn | CU 12235 | EA 071631

Dist	COUNTY	ROUTE	POST MILES TOTAL PROJECT	SHEET No.	TOTAL SHEETS
12	Ora	22,405, 605	R0.3/R0.9, 22.3/24.0,3.0/R1.6	783	1929

REGISTERED CIVIL ENGINEER 12/22/09 DATE

2-1-10
PLANS APPROVAL DATE

REGISTERED PROFESSIONAL ENGINEER JULIET SU No. C56168 Exp. 12/31/10 CIVIL STATE OF CALIFORNIA

THE STATE OF CALIFORNIA OR ITS OFFICERS OR AGENTS SHALL NOT BE RESPONSIBLE FOR THE ACCURACY OR COMPLETENESS OF ELECTRONIC COPIES OF THIS PLAN SHEET.

MTS
16795 VON KARMAN AVE
SUITE 205
IRVINE, CA 92606

ORANGE COUNTY
TRANSPORTATION AUTHORITY
550 S. MAIN STREET
ORANGE, CA 92863-1584

NOTE:

1. FOR COMPLETE RIGHT OF WAY AND ACCURATE ACCESS DATA, SEE RIGHT OF WAY RECORD MAPS AT DISTRICT OFFICE.

CONSTRUCTION NOTE THIS SHEET:

6 PLACE SURCHARGE.

CURVE DATA

No.	R	Δ	T	L
332	2,393.00′	17°57′33"	378.14′	750.08′
333	2,407.00′	23°10′03"	493.37′	973.26′

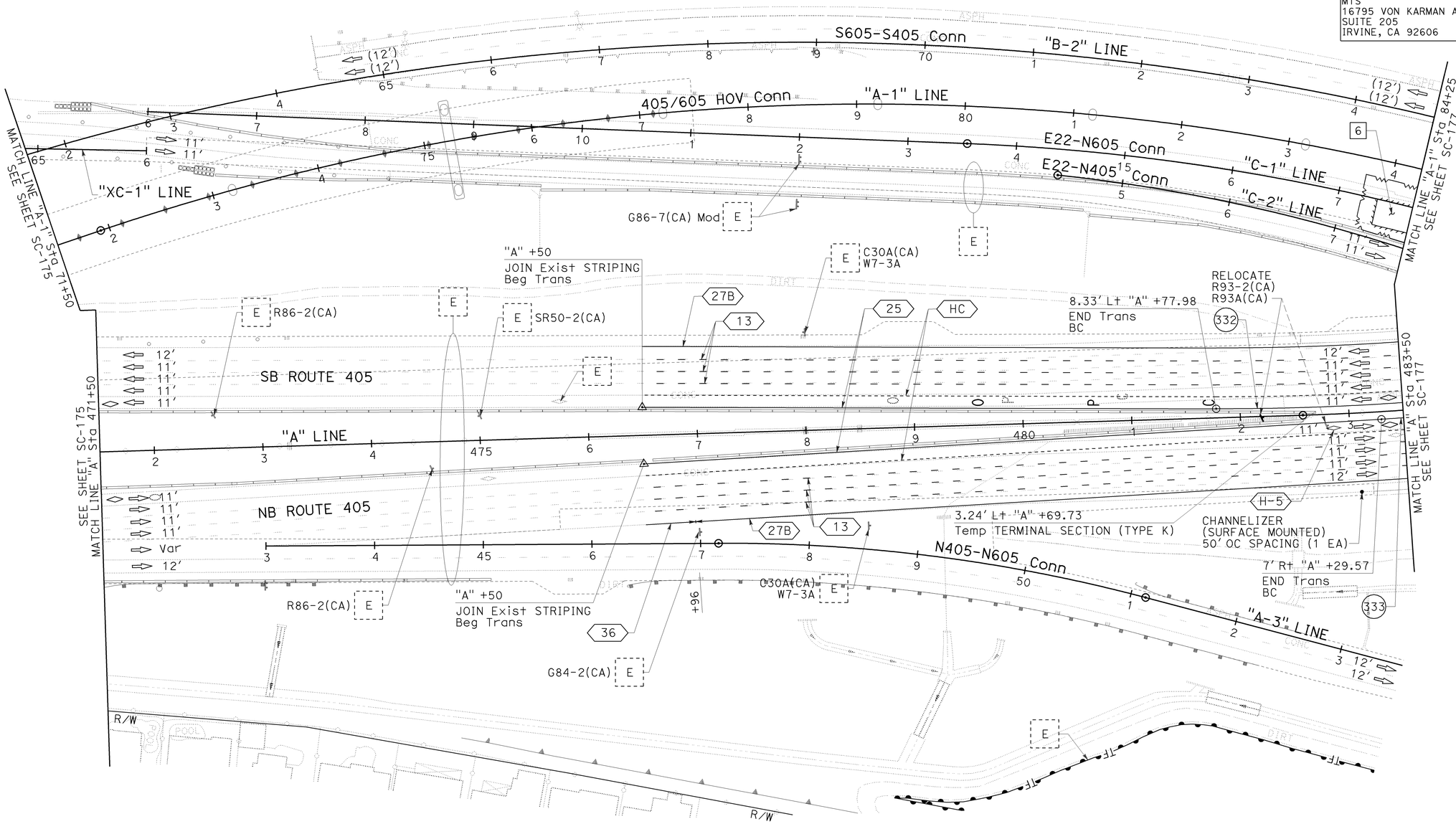

STAGE 3B

STAGE CONSTRUCTION AND TRAFFIC HANDLING PLAN

SCALE: 1" = 50′

SC-176

THIS PLAN ACCURATE FOR STAGE CONSTRUCTION AND TRAFFIC HANDLING WORK ONLY.

STATE OF CALIFORNIA - DEPARTMENT OF TRANSPORTATION
Caltrans

CONSULTANT FUNCTIONAL SUPERVISOR: LEONARD SEQUEIRA
CALCULATED-DESIGNED BY: KELSIE ANDERSON
CHECKED BY: JULIET SU
REVISED BY: KLA
DATE REVISED: 12/22/09

LAST REVISION 08-10-09
DATE PLOTTED => 03-FEB-2010
TIME PLOTTED => 14:13

NOTE:

1. FOR COMPLETE RIGHT OF WAY AND ACCURATE ACCESS DATA, SEE RIGHT OF WAY RECORD MAPS AT DISTRICT OFFICE.

CONSTRUCTION NOTES THIS SHEET:

6 PLACE SURCHARGE.

7 Const PORTION OF Br No. 55-1097G. SEE STRUCTURE PLANS.

8 Const PORTION OF Br No. 55-1098E. SEE STRUCTURE PLANS.

10 Const DRAINAGE SYSTEM. SEE DRAINAGE PLANS.

CURVE DATA				
No.	R	Δ	T	L
332	2,393.00′	17°57′33"	378.14′	750.08′
333	2,407.00′	24°10′03"	493.37′	973.26′
334	1,023.00′	04°33′06"	40.66′	81.27′

Dist	COUNTY	ROUTE	POST MILES TOTAL PROJECT	SHEET No.	TOTAL SHEETS
12	Ora	22,405, 605	R0.3/R0.9, 22.3/24.0,3.0/R1.6	784	1929

REGISTERED CIVIL ENGINEER — 12/22/09 DATE

JULIET SU No. C56168 Exp.12/31/10 CIVIL — REGISTERED PROFESSIONAL ENGINEER — STATE OF CALIFORNIA

2-1-10
PLANS APPROVAL DATE

THE STATE OF CALIFORNIA OR ITS OFFICERS OR AGENTS SHALL NOT BE RESPONSIBLE FOR THE ACCURACY OR COMPLETENESS OF ELECTRONIC COPIES OF THIS PLAN SHEET.

MTS
16795 VON KARMAN AVE
SUITE 205
IRVINE, CA 92606

ORANGE COUNTY
TRANSPORTATION AUTHORITY
550 S. MAIN STREET
ORANGE, CA 92863-1584

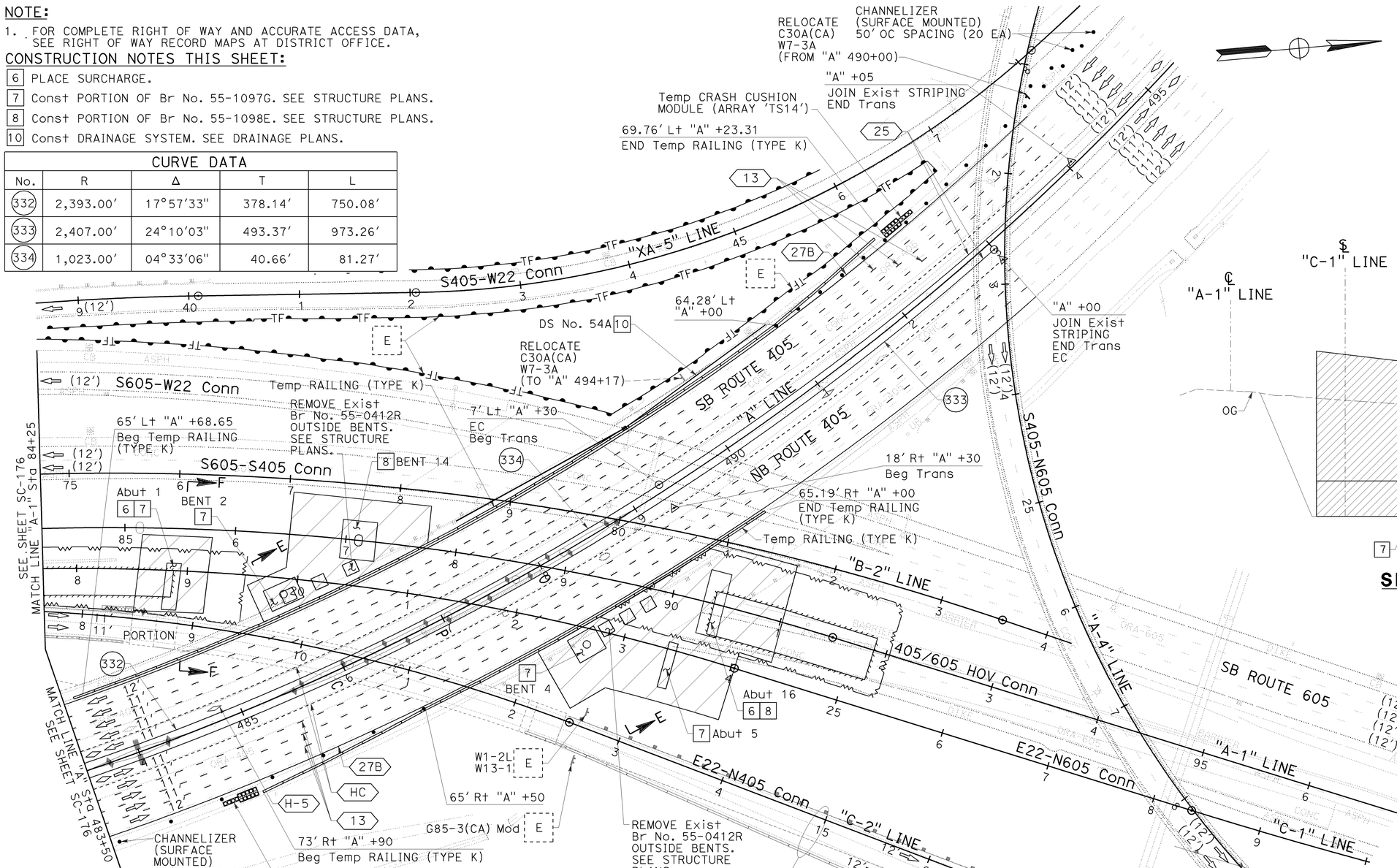

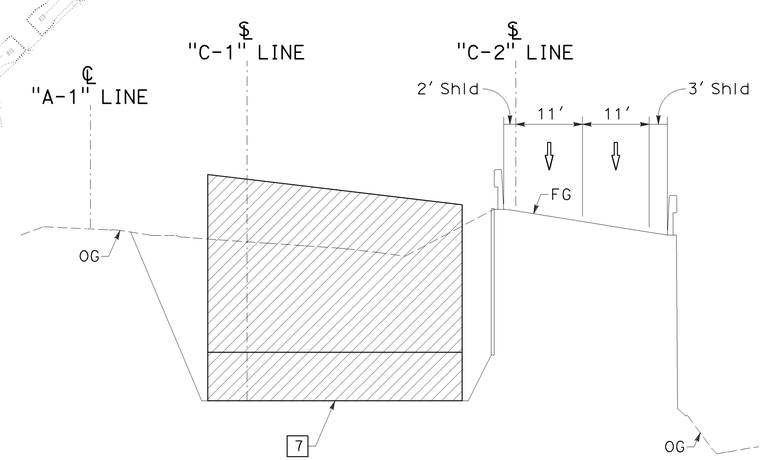

SECTION F-F
NO SCALE

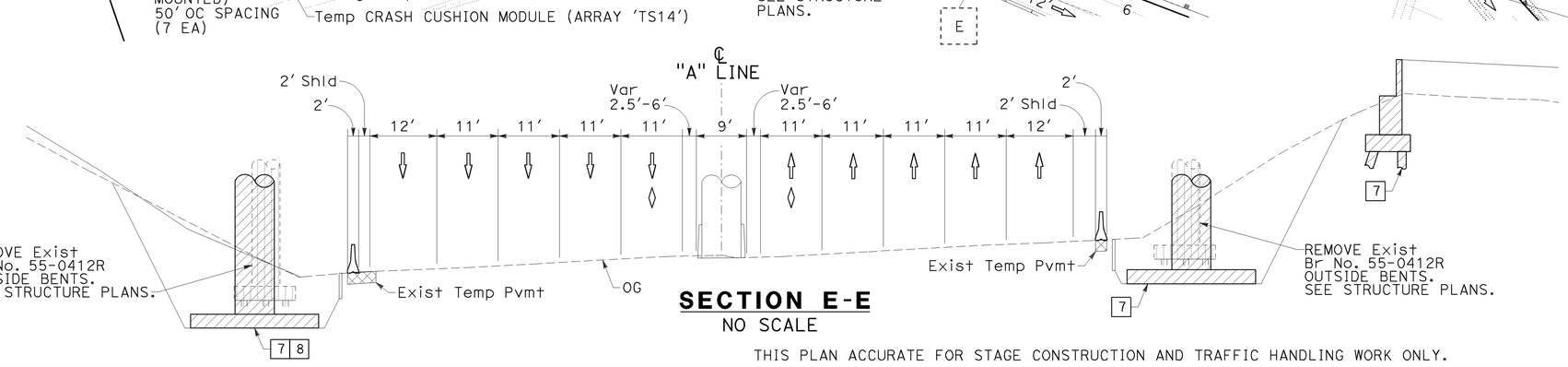

SECTION E-E
NO SCALE

THIS PLAN ACCURATE FOR STAGE CONSTRUCTION AND TRAFFIC HANDLING WORK ONLY.

STAGE 3B

STAGE CONSTRUCTION AND TRAFFIC HANDLING PLAN

SCALE: 1" = 50′

SC-177

STATE OF CALIFORNIA - DEPARTMENT OF TRANSPORTATION — Caltrans

CONSULTANT FUNCTIONAL SUPERVISOR: LEONARD SEQUEIRA

CALCULATED-DESIGNED BY: KELSIE ANDERSON
CHECKED BY: JULIET SU

REVISED BY: KLA — DATE REVISED: 12/22/09

LAST REVISION | DATE PLOTTED => 03-FEB-2010 | TIME PLOTTED => 14:13
08-10-09

BORDER LAST REVISED 8/1/2008

RELATIVE BORDER SCALE IS IN INCHES 0 1 2 3

USERNAME => trcarol
DGN FILE => c07163ma177.dgn

CU 12235

EA 071631

Dist	COUNTY	ROUTE	POST MILES TOTAL PROJECT	SHEET No.	TOTAL SHEETS
12	Ora	22,405, 605	R0.3/R0.9, 22.3/24.0,3.0/R1.6	785	1929

REGISTERED CIVIL ENGINEER — 12/22/09 DATE

JULIET SU No. C56168 Exp.12/31/10 CIVIL — REGISTERED PROFESSIONAL ENGINEER — STATE OF CALIFORNIA

2-1-10
PLANS APPROVAL DATE

THE STATE OF CALIFORNIA OR ITS OFFICERS OR AGENTS SHALL NOT BE RESPONSIBLE FOR THE ACCURACY OR COMPLETENESS OF ELECTRONIC COPIES OF THIS PLAN SHEET.

MTS
16795 VON KARMAN AVE
SUITE 205
IRVINE, CA 92606

ORANGE COUNTY
TRANSPORTATION AUTHORITY
550 S. MAIN STREET
ORANGE, CA 92863-1584

NOTE:

1. FOR COMPLETE RIGHT OF WAY AND ACCURATE ACCESS DATA, SEE RIGHT OF WAY RECORD MAPS AT DISTRICT OFFICE.

CONSTRUCTION NOTES THIS SHEET:

6 PLACE SURCHARGE.
9 Const SEAL BEACH Blvd IMPROVEMENTS.
10 Const DRAINAGE SYSTEM. SEE DRAINAGE PLANS.

CURVE DATA				
No.	R	Δ	T	L
(335)	378.84′	21°28′32"	71.84′	142.00′
(336)	360.00′	38°15′31"	127.87′	240.39′

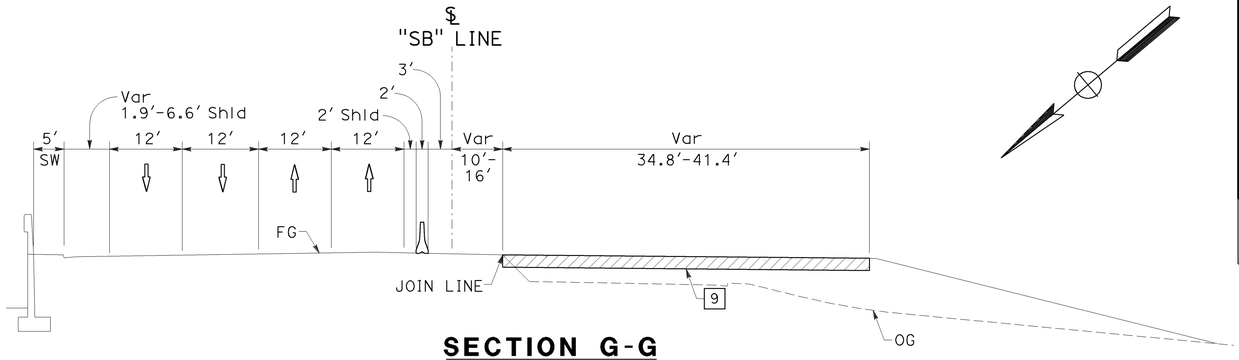

SECTION G-G
NO SCALE

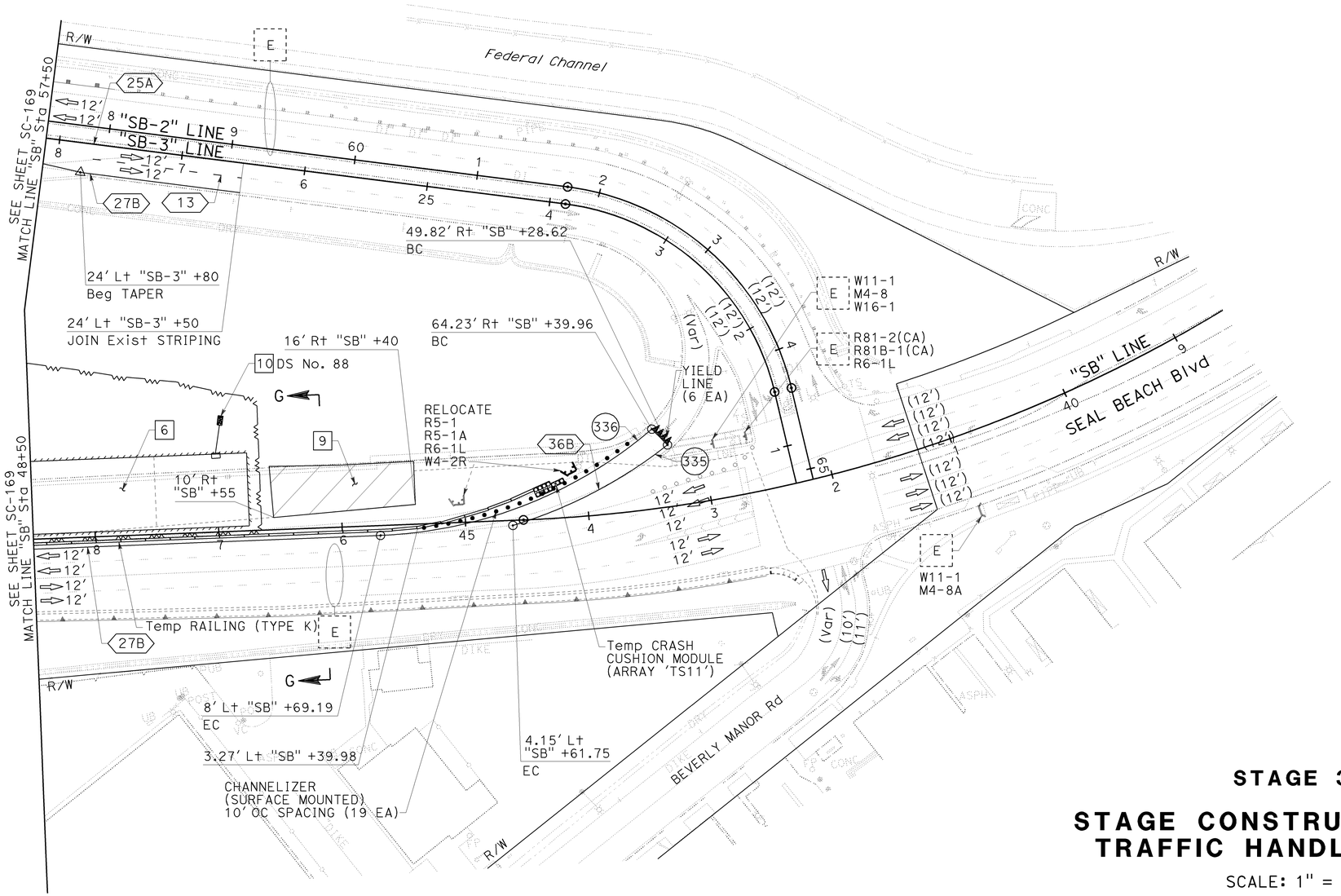

THIS PLAN ACCURATE FOR STAGE CONSTRUCTION AND TRAFFIC HANDLING WORK ONLY.

STAGE 3B

STAGE CONSTRUCTION AND TRAFFIC HANDLING PLAN

SCALE: 1" = 50′

SC-178

LAST REVISION 08-10-09 | DATE PLOTTED => 03-FEB-2010 | TIME PLOTTED => 14:13

STATE OF CALIFORNIA - DEPARTMENT OF TRANSPORTATION | Caltrans

CONSULTANT FUNCTIONAL SUPERVISOR: LEONARD SEQUEIRA

CALCULATED-DESIGNED BY: KELSIE ANDERSON | CHECKED BY: JULIET SU

REVISED BY	DATE REVISED
KLA	12/22/09

BORDER LAST REVISED 8/1/2008

RELATIVE BORDER SCALE IS IN INCHES 0 1 2 3

USERNAME => trcarol
DGN FILE => c07163ma178.dgn

CU 12235 | EA 071631

Dist	COUNTY	ROUTE	POST MILES TOTAL PROJECT	SHEET No.	TOTAL SHEETS
12	Ora	22,405, 605	R0.3/R0.9, 22.3/24.0,3.0/R1.6	786	1929

REGISTERED CIVIL ENGINEER — 12/22/09 DATE

2-1-10
PLANS APPROVAL DATE

REGISTERED PROFESSIONAL ENGINEER — JULIET SU No. C56168 Exp.12/31/10 CIVIL — STATE OF CALIFORNIA

THE STATE OF CALIFORNIA OR ITS OFFICERS OR AGENTS SHALL NOT BE RESPONSIBLE FOR THE ACCURACY OR COMPLETENESS OF ELECTRONIC COPIES OF THIS PLAN SHEET.

MTS
16795 VON KARMAN AVE
SUITE 205
IRVINE, CA 92606

ORANGE COUNTY
TRANSPORTATION AUTHORITY
550 S. MAIN STREET
ORANGE, CA 92863-1584

NOTE:

1. FOR COMPLETE RIGHT OF WAY AND ACCURATE ACCESS DATA, SEE RIGHT OF WAY RECORD MAPS AT DISTRICT OFFICE.

CONSTRUCTION NOTES THIS SHEET:

1 Const MEDIAN BARRIER.

2 Const OH SIGN. SEE SIGN PLANS.

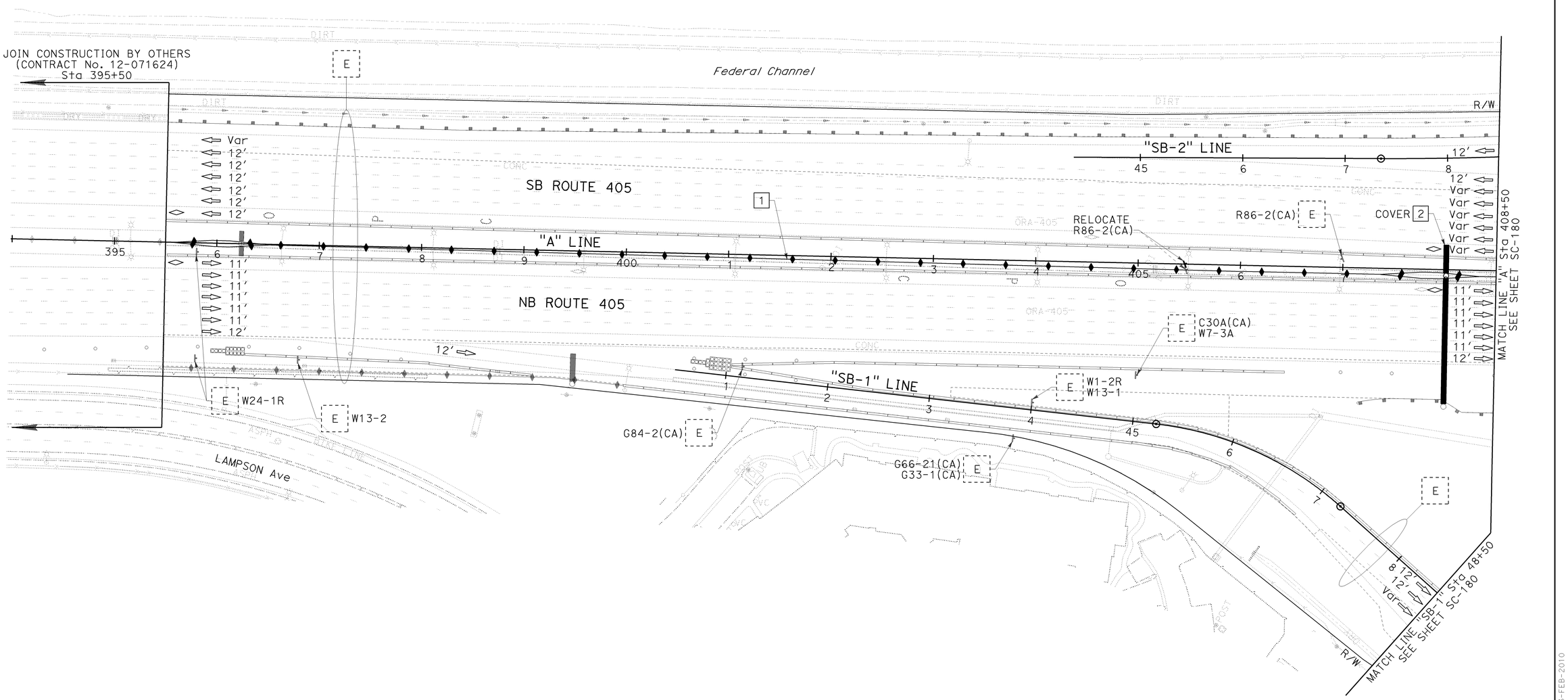

STAGE 3C

STAGE CONSTRUCTION AND TRAFFIC HANDLING PLAN

SCALE: 1" = 50'

SC-179

THIS PLAN ACCURATE FOR STAGE CONSTRUCTION AND TRAFFIC HANDLING WORK ONLY.

REVISED BY	DATE REVISED
KLA	12/22/09

CALCULATED-DESIGNED BY: KELSIE ANDERSON
CHECKED BY: JULIET SU
CONSULTANT FUNCTIONAL SUPERVISOR: LEONARD SEQUEIRA

STATE OF CALIFORNIA - DEPARTMENT OF TRANSPORTATION
Caltrans

LAST REVISION DATE PLOTTED => 03-FEB-2010
08-10-09 TIME PLOTTED => 14:13

BORDER LAST REVISED 8/1/2008 | RELATIVE BORDER SCALE IS IN INCHES 0 1 2 3 | USERNAME => trcarol DGN FILE => c07163ma179.dgn | CU 12235 | EA 071631

Dist	COUNTY	ROUTE	POST MILES TOTAL PROJECT	SHEET No.	TOTAL SHEETS
12	Ora	22,405, 605	R0.3/R0.9, 22.3/24.0,3.0/R1.6	787	1929

REGISTERED CIVIL ENGINEER — 12/22/09 DATE

2-1-10
PLANS APPROVAL DATE

JULIET SU No. C56168 Exp.12/31/10 CIVIL — REGISTERED PROFESSIONAL ENGINEER — STATE OF CALIFORNIA

THE STATE OF CALIFORNIA OR ITS OFFICERS OR AGENTS SHALL NOT BE RESPONSIBLE FOR THE ACCURACY OR COMPLETENESS OF ELECTRONIC COPIES OF THIS PLAN SHEET.

MTS
16795 VON KARMAN AVE
SUITE 205
IRVINE, CA 92606

ORANGE COUNTY
TRANSPORTATION AUTHORITY
550 S. MAIN STREET
ORANGE, CA 92863-1584

NOTE:

1: FOR COMPLETE RIGHT OF WAY AND ACCURATE ACCESS DATA, SEE RIGHT OF WAY RECORD MAPS AT DISTRICT OFFICE.

CONSTRUCTION NOTES THIS SHEET:

1 Const MEDIAN BARRIER.
3 Const REMAINDER OF SEAL BEACH Blvd IMPROVEMENTS.
4 Const REMAINDER OF Br No. 55-1099. SEE STRUCTURE PLANS.
5 Const PORTION OF "SB-5" LINE.
6 Const REMAINDER OF "SB-3" LINE.
15 Const DRAINAGE SYSTEM. SEE DRAINAGE PLANS.
16 RECONSTRUCT MAINLINE ELEMENTS IMPACTED BY Br Const.

CURVE DATA				
No.	R	Δ	T	L
337	150.00′	131°07′60"	330.16′	343.31′

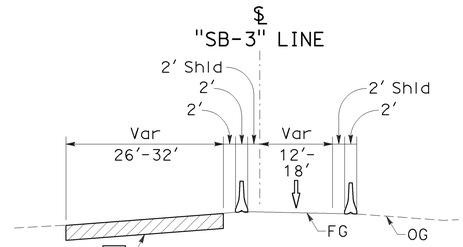

SECTION A-A
NO SCALE

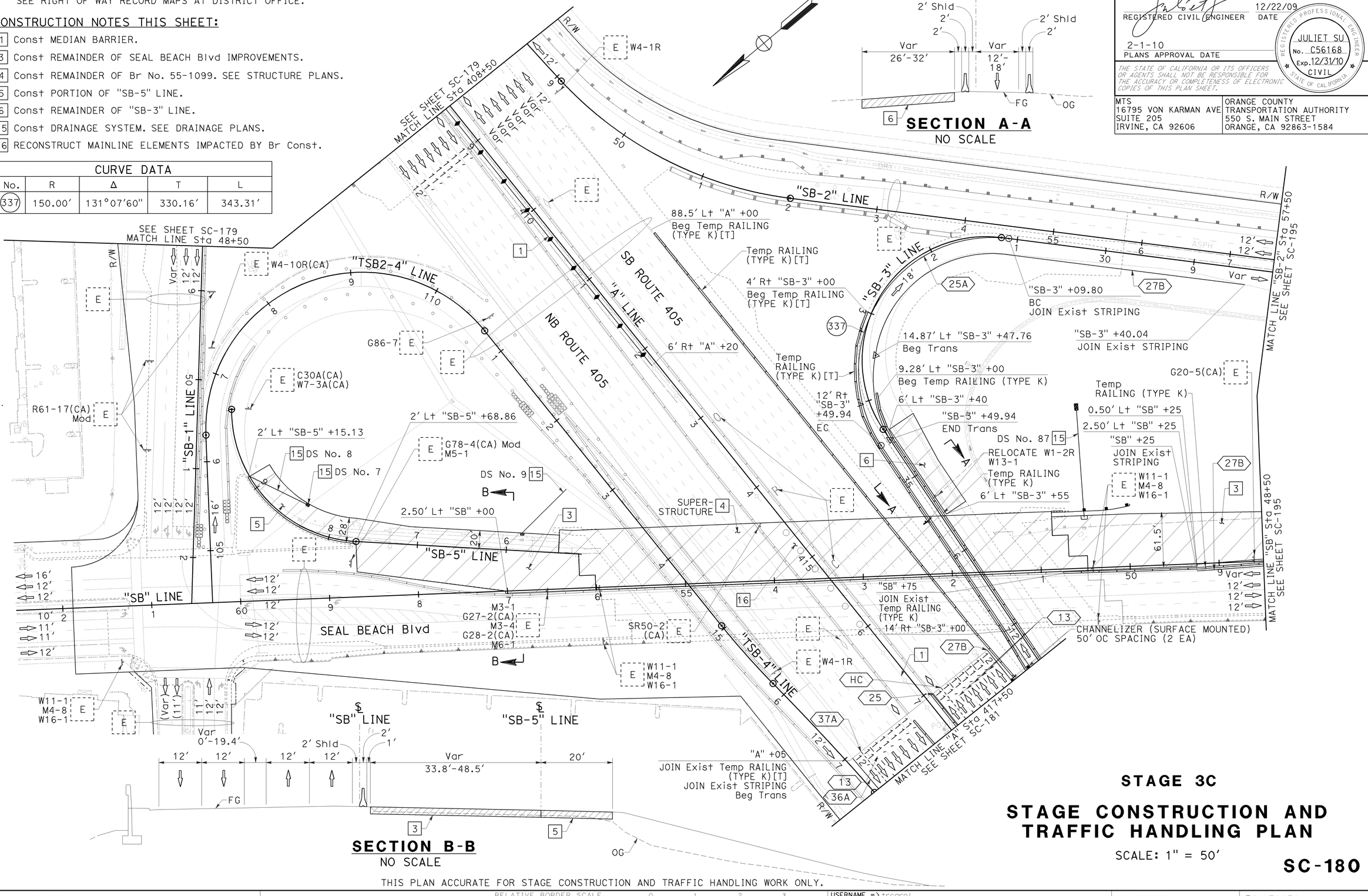

SECTION B-B
NO SCALE

THIS PLAN ACCURATE FOR STAGE CONSTRUCTION AND TRAFFIC HANDLING WORK ONLY.

STAGE 3C

STAGE CONSTRUCTION AND TRAFFIC HANDLING PLAN

SCALE: 1" = 50′

SC-180

REVISED BY	DATE REVISED
KLA	12/22/09

CALCULATED-DESIGNED BY: KELSIE ANDERSON
CHECKED BY: JULIET SU
CONSULTANT FUNCTIONAL SUPERVISOR: LEONARD SEQUEIRA
STATE OF CALIFORNIA - DEPARTMENT OF TRANSPORTATION

LAST REVISION DATE PLOTTED => 03-FEB-2010
TIME PLOTTED => 14:13
08-10-09

BORDER LAST REVISED 8/1/2008
RELATIVE BORDER SCALE IS IN INCHES 0 1 2 3
USERNAME => trcarol
DGN FILE => c07163ma180.dgn
CU 12235
EA 071631

Dist	COUNTY	ROUTE	POST MILES TOTAL PROJECT	SHEET No.	TOTAL SHEETS
12	Ora	22,405, 605	R0.3/R0.9, 22.3/24.0,3.0/R1.6	788	1929

REGISTERED CIVIL ENGINEER — 12/22/09 DATE

2-1-10 PLANS APPROVAL DATE

REGISTERED PROFESSIONAL ENGINEER — JULIET SU No. C56168 Exp.12/31/10 CIVIL — STATE OF CALIFORNIA

THE STATE OF CALIFORNIA OR ITS OFFICERS OR AGENTS SHALL NOT BE RESPONSIBLE FOR THE ACCURACY OR COMPLETENESS OF ELECTRONIC COPIES OF THIS PLAN SHEET.

MTS 16795 VON KARMAN AVE SUITE 205 IRVINE, CA 92606	ORANGE COUNTY TRANSPORTATION AUTHORITY 550 S. MAIN STREET ORANGE, CA 92863-1584

NOTE:

1. FOR COMPLETE RIGHT OF WAY AND ACCURATE ACCESS DATA, SEE RIGHT OF WAY RECORD MAPS AT DISTRICT OFFICE.

CONSTRUCTION NOTES THIS SHEET:

1 Const MEDIAN BARRIER.

2 Const OH SIGN. SEE SIGN PLANS.

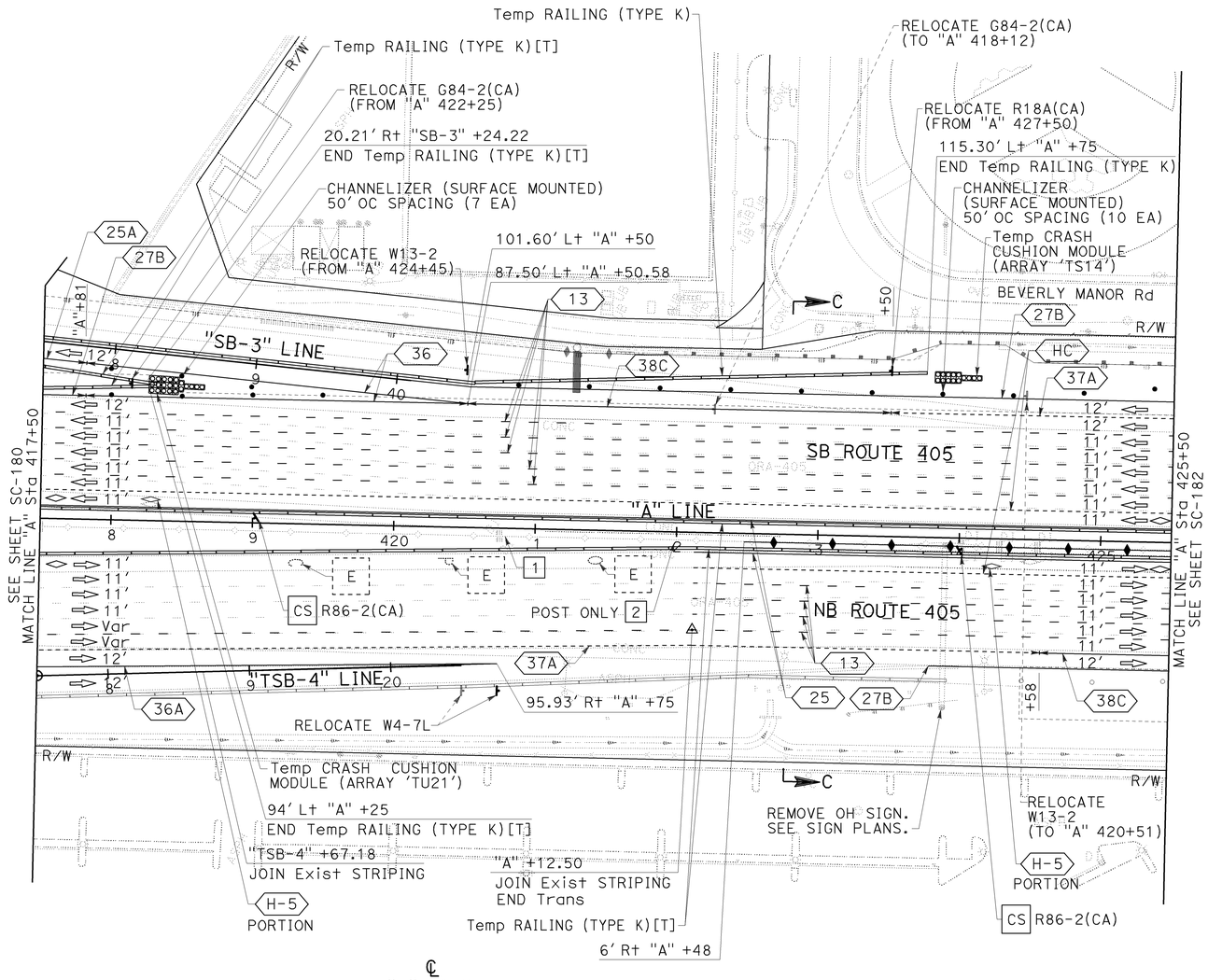

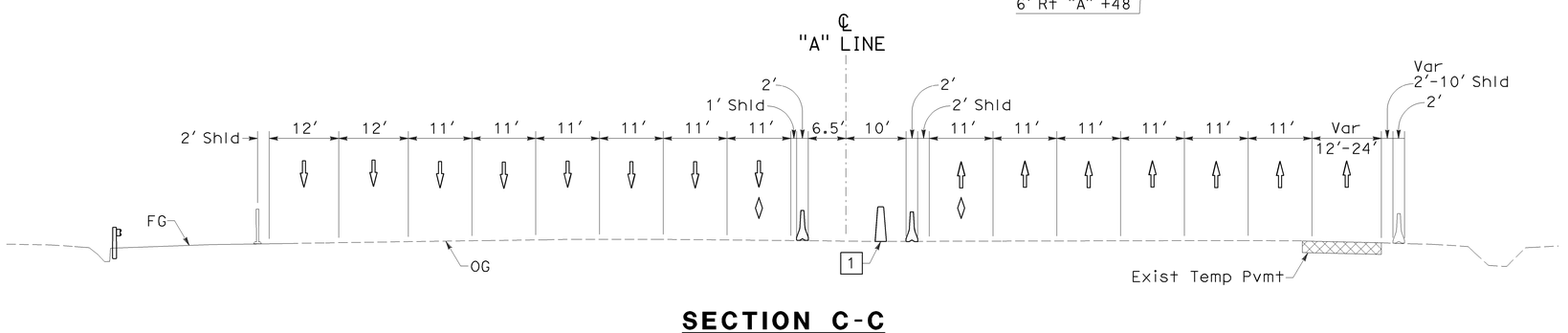

SECTION C-C
NO SCALE

THIS PLAN ACCURATE FOR STAGE CONSTRUCTION AND TRAFFIC HANDLING WORK ONLY.

STAGE 3C

STAGE CONSTRUCTION AND TRAFFIC HANDLING PLAN

SCALE: 1" = 50'

SC-181

LAST REVISION DATE PLOTTED => 03-FEB-2010
08-10-09 TIME PLOTTED => 14:14

STATE OF CALIFORNIA - DEPARTMENT OF TRANSPORTATION — Caltrans

CONSULTANT FUNCTIONAL SUPERVISOR: LEONARD SEQUEIRA

REVISED BY	DATE REVISED
KLA	12/22/09

CALCULATED-DESIGNED BY: KELSIE ANDERSON
CHECKED BY: JULIET SU

BORDER LAST REVISED 8/1/2008 — RELATIVE BORDER SCALE IS IN INCHES 0 1 2 3 — USERNAME => trcarol DGN FILE => c07163ma181.dgn — CU 12235 — EA 071631

NOTE:

1. FOR COMPLETE RIGHT OF WAY AND ACCURATE ACCESS DATA, SEE RIGHT OF WAY RECORD MAPS AT DISTRICT OFFICE.

CONSTRUCTION NOTE THIS SHEET:

[1] Const MEDIAN BARRIER.

CURVE DATA				
No.	R	Δ	T	L
(338)	10,000.00′	02°55′13"	254.90′	509.69′

Dist	COUNTY	ROUTE	POST MILES TOTAL PROJECT	SHEET No.	TOTAL SHEETS
12	Ora	22,405, 605	R0.3/R0.9, 22.3/24.0,3.0/R1.6	789	1929

REGISTERED CIVIL ENGINEER — 12/22/09 DATE

2-1-10
PLANS APPROVAL DATE

REGISTERED PROFESSIONAL ENGINEER — JULIET SU — No. C56168 — Exp.12/31/10 — CIVIL — STATE OF CALIFORNIA

THE STATE OF CALIFORNIA OR ITS OFFICERS OR AGENTS SHALL NOT BE RESPONSIBLE FOR THE ACCURACY OR COMPLETENESS OF ELECTRONIC COPIES OF THIS PLAN SHEET.

MTS
16795 VON KARMAN AVE
SUITE 205
IRVINE, CA 92606

ORANGE COUNTY
TRANSPORTATION AUTHORITY
550 S. MAIN STREET
ORANGE, CA 92863-1584

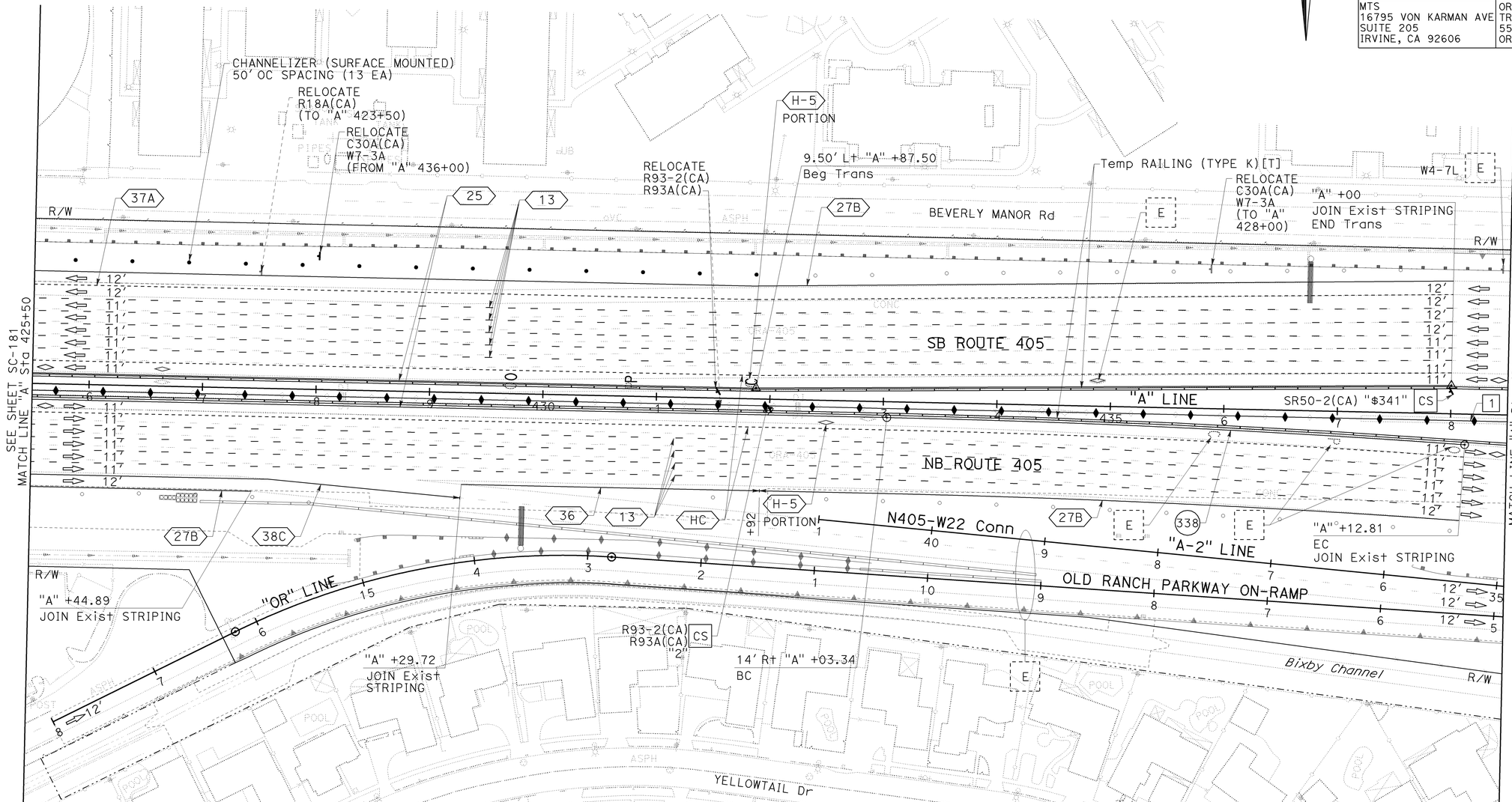

THIS PLAN ACCURATE FOR STAGE CONSTRUCTION AND TRAFFIC HANDLING WORK ONLY.

STAGE 3C

STAGE CONSTRUCTION AND TRAFFIC HANDLING PLAN

SCALE: 1" = 50′

SC-182

REVISED BY	DATE REVISED
KLA	12/22/09

CALCULATED-DESIGNED BY: KELSIE ANDERSON
CHECKED BY: JULIET SU
CONSULTANT FUNCTIONAL SUPERVISOR: LEONARD SEQUEIRA
STATE OF CALIFORNIA - DEPARTMENT OF TRANSPORTATION

LAST REVISION DATE PLOTTED => 03-FEB-2010
TIME PLOTTED => 14:14
08-10-09

BORDER LAST REVISED 8/1/2008

RELATIVE BORDER SCALE IS IN INCHES 0 1 2 3

USERNAME => trcarol
DGN FILE => c07163ma182.dgn

CU 12235

EA 071631

Dist	COUNTY	ROUTE	POST MILES TOTAL PROJECT	SHEET No.	TOTAL SHEETS
12	Ora	22,405, 605	R0.3/R0.9, 22.3/24.0,3.0/R1.6	790	1929

REGISTERED CIVIL ENGINEER — 12/22/09 DATE

2-1-10
PLANS APPROVAL DATE

REGISTERED PROFESSIONAL ENGINEER
JULIET SU
No. C56168
Exp.12/31/10
CIVIL
STATE OF CALIFORNIA

THE STATE OF CALIFORNIA OR ITS OFFICERS OR AGENTS SHALL NOT BE RESPONSIBLE FOR THE ACCURACY OR COMPLETENESS OF ELECTRONIC COPIES OF THIS PLAN SHEET.

MTS
16795 VON KARMAN AVE
SUITE 205
IRVINE, CA 92606

ORANGE COUNTY
TRANSPORTATION AUTHORITY
550 S. MAIN STREET
ORANGE, CA 92863-1584

NOTE:

1. FOR COMPLETE RIGHT OF WAY AND ACCURATE ACCESS DATA, SEE RIGHT OF WAY RECORD MAPS AT DISTRICT OFFICE.

CONSTRUCTION NOTES THIS SHEET:

1 Const MEDIAN BARRIER.

2 Const OH SIGN. SEE SIGN PLANS.

17 Const PORTION OF ROUTE 405 IMPROVEMENTS.

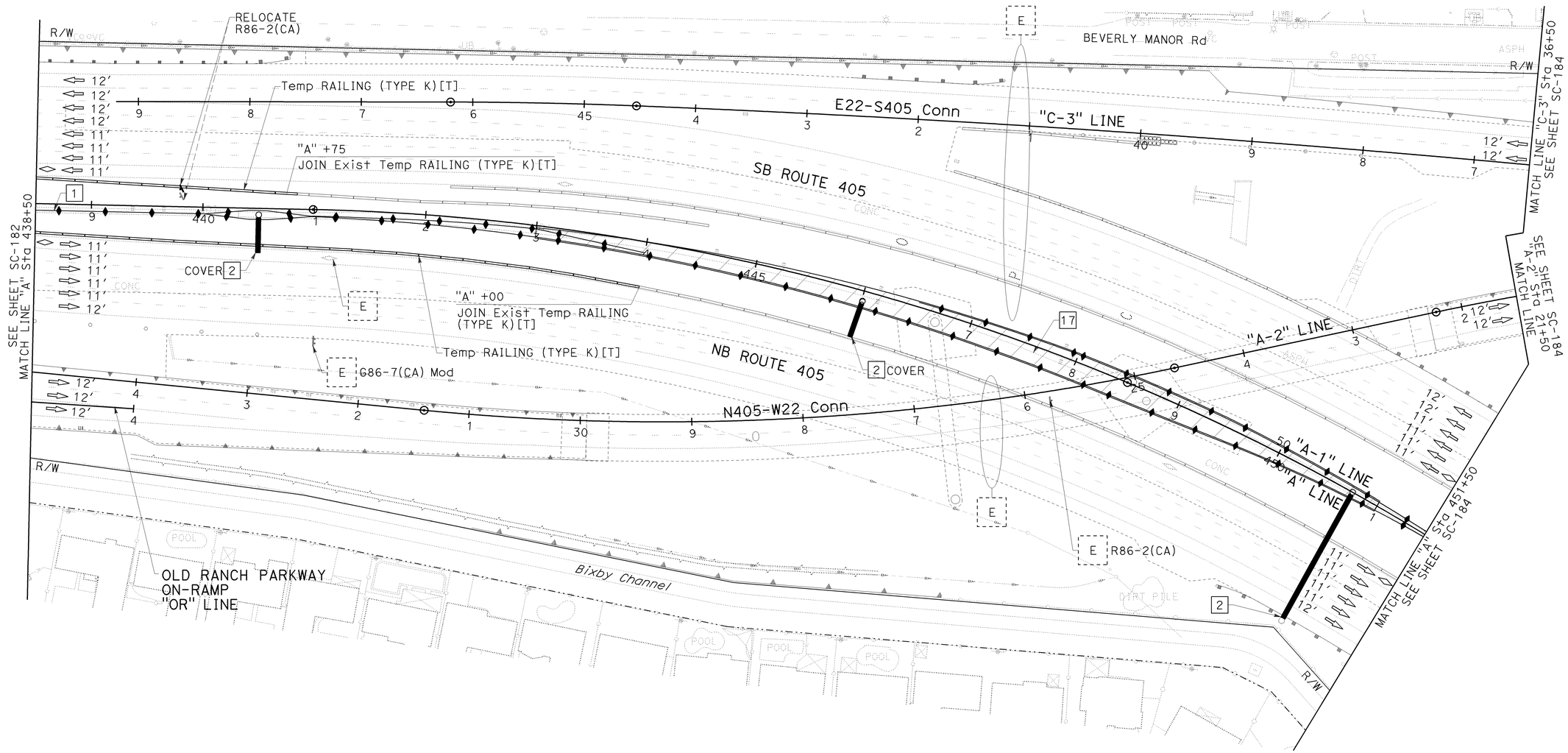

STAGE 3C

STAGE CONSTRUCTION AND TRAFFIC HANDLING PLAN

SCALE: 1" = 50'

SC-183

THIS PLAN ACCURATE FOR STAGE CONSTRUCTION AND TRAFFIC HANDLING WORK ONLY.

REVISED BY	DATE REVISED
KLA	12/22/09

CALCULATED-DESIGNED BY: KELSIE ANDERSON
CHECKED BY: JULIET SU
CONSULTANT FUNCTIONAL SUPERVISOR: LEONARD SEQUEIRA

STATE OF CALIFORNIA - DEPARTMENT OF TRANSPORTATION
Caltrans

LAST REVISION 08-10-09
DATE PLOTTED => 03-FEB-2010
TIME PLOTTED => 14:14

BORDER LAST REVISED 8/1/2008
RELATIVE BORDER SCALE IS IN INCHES 0 1 2 3
USERNAME => trcarol
DGN FILE => c07163ma183.dgn
CU 12235
EA 071631

Dist	COUNTY	ROUTE	POST MILES TOTAL PROJECT	SHEET No.	TOTAL SHEETS
12	Ora	22,405, 605	R0.3/R0.9, 22.3/24.0,3.0/R1.6	791	1929

REGISTERED CIVIL ENGINEER — 12/22/09 DATE

2-1-10
PLANS APPROVAL DATE

REGISTERED PROFESSIONAL ENGINEER
JULIET SU
No. C56168
Exp.12/31/10
CIVIL
STATE OF CALIFORNIA

THE STATE OF CALIFORNIA OR ITS OFFICERS OR AGENTS SHALL NOT BE RESPONSIBLE FOR THE ACCURACY OR COMPLETENESS OF ELECTRONIC COPIES OF THIS PLAN SHEET.

MTS
16795 VON KARMAN AVE
SUITE 205
IRVINE, CA 92606

ORANGE COUNTY
TRANSPORTATION AUTHORITY
550 S. MAIN STREET
ORANGE, CA 92863-1584

NOTE:

1. FOR COMPLETE RIGHT OF WAY AND ACCURATE ACCESS DATA, SEE RIGHT OF WAY RECORD MAPS AT DISTRICT OFFICE.

CONSTRUCTION NOTE THIS SHEET:

1 Const MEDIAN BARRIER.

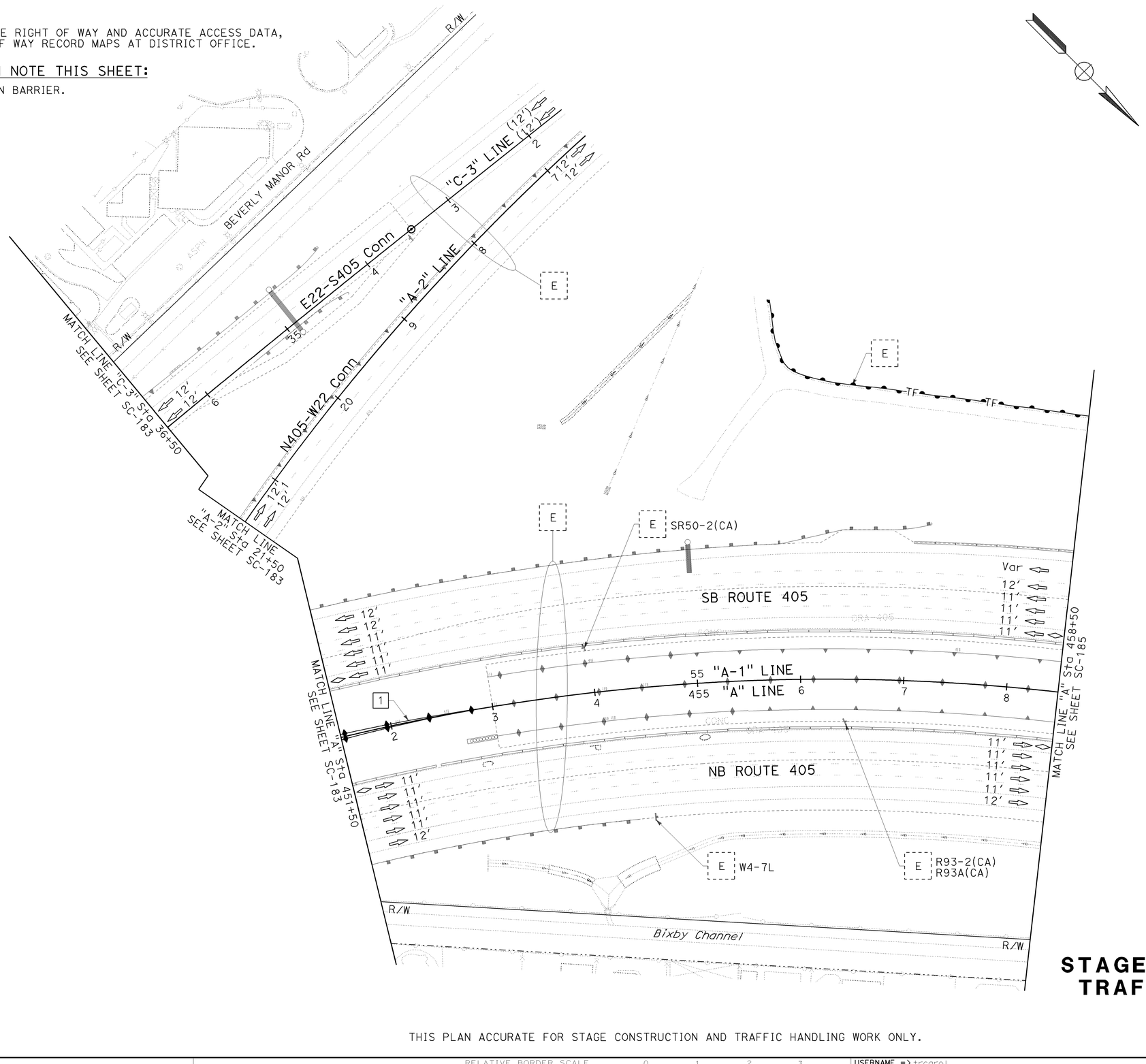

THIS PLAN ACCURATE FOR STAGE CONSTRUCTION AND TRAFFIC HANDLING WORK ONLY.

STAGE 3C

STAGE CONSTRUCTION AND TRAFFIC HANDLING PLAN

SCALE: 1" = 50'

SC-184

REVISED BY	DATE REVISED
KLA	12/22/09

CALCULATED-DESIGNED BY: KELSIE ANDERSON
CHECKED BY: JULIET SU
CONSULTANT FUNCTIONAL SUPERVISOR: LEONARD SEQUEIRA
STATE OF CALIFORNIA - DEPARTMENT OF TRANSPORTATION
Caltrans

LAST REVISION DATE PLOTTED => 03-FEB-2010
TIME PLOTTED => 14:14
08-10-09

BORDER LAST REVISED 8/1/2008
RELATIVE BORDER SCALE IS IN INCHES 0 1 2 3
USERNAME => trcarol
DGN FILE => c07163ma184.dgn
CU 12235
EA 071631

Dist	COUNTY	ROUTE	POST MILES TOTAL PROJECT	SHEET No.	TOTAL SHEETS
12	Ora	22,405, 605	R0.3/R0.9, 22.3/24.0,3.0/R1.6	792	1929

REGISTERED CIVIL ENGINEER — 12/22/09 DATE

2-1-10 PLANS APPROVAL DATE

JULIET SU No. C56168 Exp.12/31/10 CIVIL — REGISTERED PROFESSIONAL ENGINEER — STATE OF CALIFORNIA

THE STATE OF CALIFORNIA OR ITS OFFICERS OR AGENTS SHALL NOT BE RESPONSIBLE FOR THE ACCURACY OR COMPLETENESS OF ELECTRONIC COPIES OF THIS PLAN SHEET.

MTS
16795 VON KARMAN AVE
SUITE 205
IRVINE, CA 92606

ORANGE COUNTY
TRANSPORTATION AUTHORITY
550 S. MAIN STREET
ORANGE, CA 92863-1584

NOTE:

1. FOR COMPLETE RIGHT OF WAY AND ACCURATE ACCESS DATA, SEE RIGHT OF WAY RECORD MAPS AT DISTRICT OFFICE.

CONSTRUCTION NOTE THIS SHEET:

1 Const MEDIAN BARRIER.

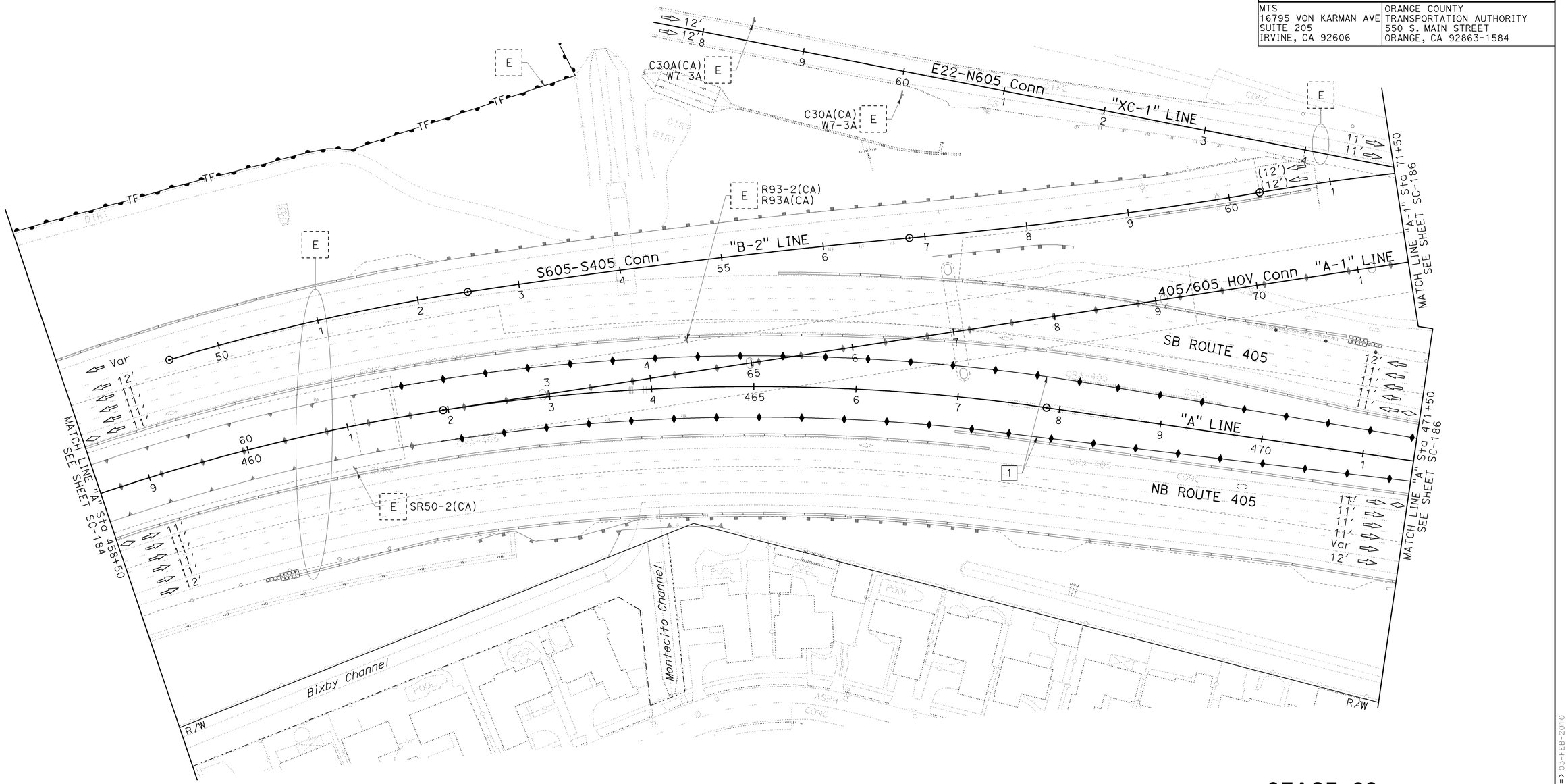

STAGE 3C

STAGE CONSTRUCTION AND TRAFFIC HANDLING PLAN

SCALE: 1" = 50'

SC-185

THIS PLAN ACCURATE FOR STAGE CONSTRUCTION AND TRAFFIC HANDLING WORK ONLY.

REVISED BY	DATE REVISED
KLA	12/22/09

CALCULATED-DESIGNED BY: KELSIE ANDERSON
CHECKED BY: JULIET SU
CONSULTANT FUNCTIONAL SUPERVISOR: LEONARD SEQUEIRA

STATE OF CALIFORNIA - DEPARTMENT OF TRANSPORTATION

Caltrans

LAST REVISION: DATE PLOTTED => 03-FEB-2010 08-10-09 TIME PLOTTED => 14:14

BORDER LAST REVISED 8/1/2008

RELATIVE BORDER SCALE IS IN INCHES 0 1 2 3

USERNAME => trcarol
DGN FILE => c07163ma185.dgn

CU 12235

EA 071631

Dist	COUNTY	ROUTE	POST MILES TOTAL PROJECT	SHEET No.	TOTAL SHEETS
12	Ora	22,405, 605	R0.3/R0.9, 22.3/24.0,3.0/R1.6	793	1929

REGISTERED CIVIL ENGINEER — 12/22/09 DATE

2-1-10 PLANS APPROVAL DATE

JULIET SU No. C56168 Exp.12/31/10 CIVIL — REGISTERED PROFESSIONAL ENGINEER — STATE OF CALIFORNIA

THE STATE OF CALIFORNIA OR ITS OFFICERS OR AGENTS SHALL NOT BE RESPONSIBLE FOR THE ACCURACY OR COMPLETENESS OF ELECTRONIC COPIES OF THIS PLAN SHEET.

MTS
16795 VON KARMAN AVE
SUITE 205
IRVINE, CA 92606

ORANGE COUNTY
TRANSPORTATION AUTHORITY
550 S. MAIN STREET
ORANGE, CA 92863-1584

NOTE:

1. FOR COMPLETE RIGHT OF WAY AND ACCURATE ACCESS DATA, SEE RIGHT OF WAY RECORD MAPS AT DISTRICT OFFICE.

CONSTRUCTION NOTES THIS SHEET:

1 Const MEDIAN BARRIER.
2 Const OH SIGN. SEE SIGN PLANS.
7 Const REMAINDER OF Br No. 55-1098E. SEE STRUCTURE PLANS.
8 Const REMAINDER OF "C-1" LINE.

CURVE DATA				
No.	R	Δ	T	L
339	2,383.00′	16°37′41"	348.24′	691.59′
340	2,417.00′	16°28′04"	349.76′	694.69′

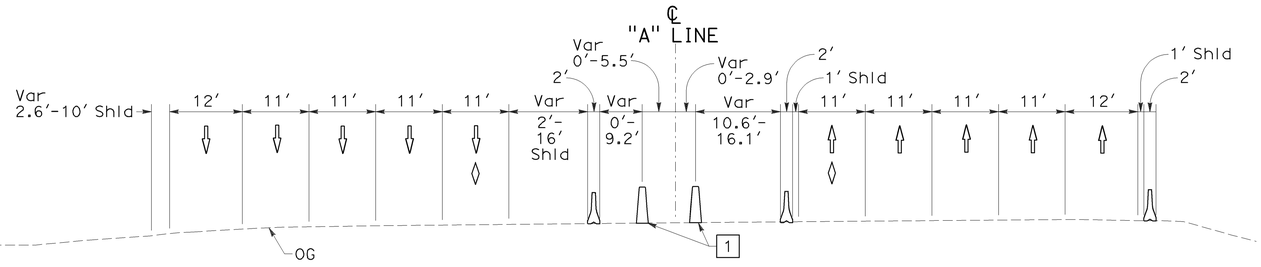

SECTION D-D
NO SCALE

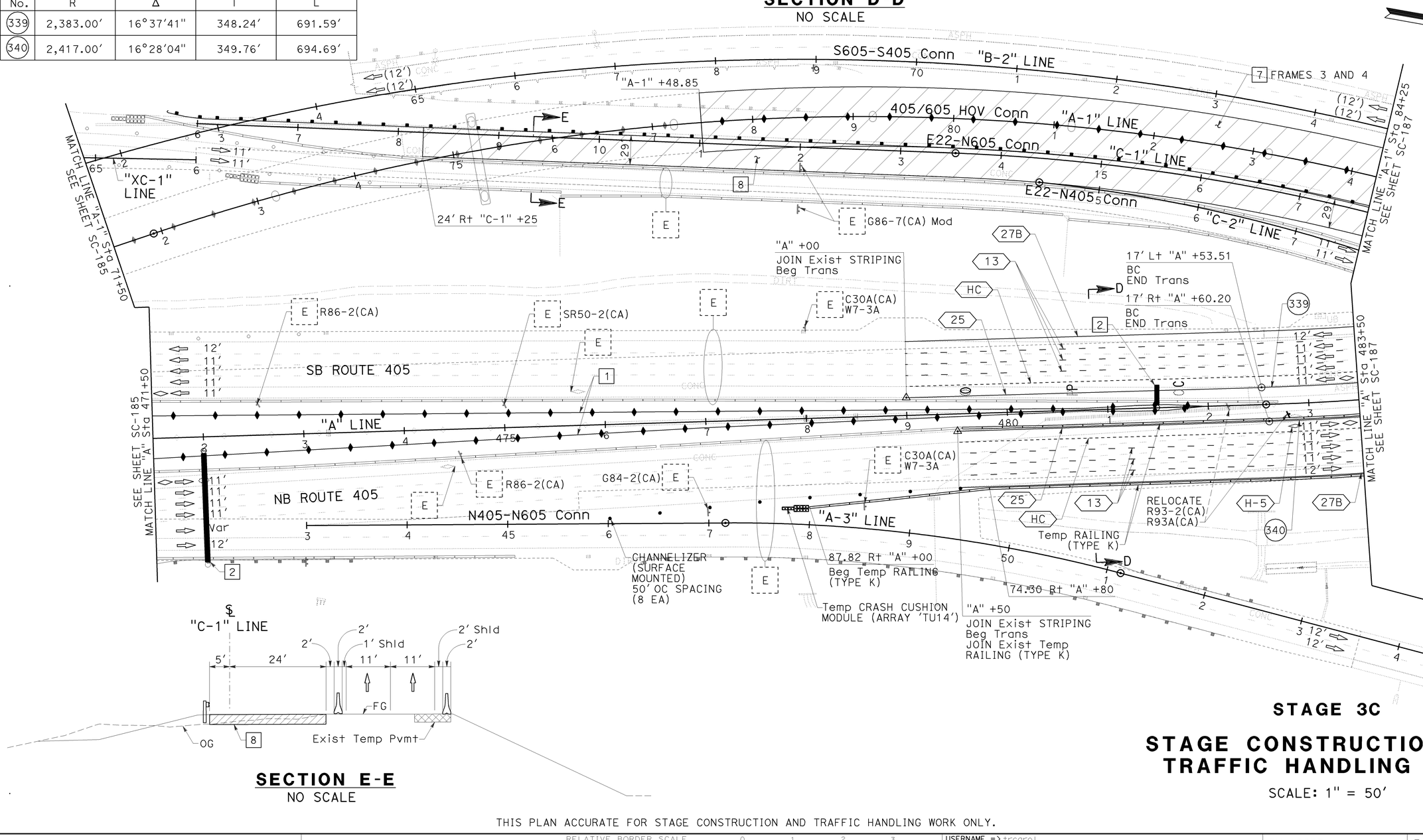

SECTION E-E
NO SCALE

STAGE 3C

STAGE CONSTRUCTION AND TRAFFIC HANDLING PLAN

SCALE: 1" = 50′

SC-186

THIS PLAN ACCURATE FOR STAGE CONSTRUCTION AND TRAFFIC HANDLING WORK ONLY.

STATE OF CALIFORNIA - DEPARTMENT OF TRANSPORTATION — Caltrans
CONSULTANT FUNCTIONAL SUPERVISOR: LEONARD SEQUEIRA
CALCULATED-DESIGNED BY: KELSIE ANDERSON
CHECKED BY: JULIET SU
REVISED BY: KLA
DATE REVISED: 12/22/09

LAST REVISION DATE PLOTTED => 03-FEB-2010
TIME PLOTTED => 14:14
08-10-09

BORDER LAST REVISED 8/1/2008 | RELATIVE BORDER SCALE IS IN INCHES 0 1 2 3 | USERNAME => trcarol DGN FILE => c07163ma186.dgn | CU 12235 | EA 071631

Dist	COUNTY	ROUTE	POST MILES TOTAL PROJECT	SHEET No.	TOTAL SHEETS
12	Ora	22,405, 605	R0.3/R0.9, 22.3/24.0,3.0/R1.6	794	1929

REGISTERED CIVIL ENGINEER — 12/22/09 DATE

JULIET SU No. C56168 Exp.12/31/10 CIVIL — REGISTERED PROFESSIONAL ENGINEER — STATE OF CALIFORNIA

2-1-10
PLANS APPROVAL DATE

THE STATE OF CALIFORNIA OR ITS OFFICERS OR AGENTS SHALL NOT BE RESPONSIBLE FOR THE ACCURACY OR COMPLETENESS OF ELECTRONIC COPIES OF THIS PLAN SHEET.

MTS 16795 VON KARMAN AVE SUITE 205 IRVINE, CA 92606	ORANGE COUNTY TRANSPORTATION AUTHORITY 550 S. MAIN STREET ORANGE, CA 92863-1584

NOTES:

1. FOR COMPLETE RIGHT OF WAY AND ACCURATE ACCESS DATA, SEE RIGHT OF WAY RECORD MAPS AT DISTRICT OFFICE.
2. SEE SHEET SC-188 FOR SECTIONS F-F AND G-G.

CURVE DATA				
No.	R	Δ	T	L
(339)	2,383.00′	16°37′41"	348.24′	691.59′
(340)	2,417.00′	16°28′04"	349.76′	694.69′

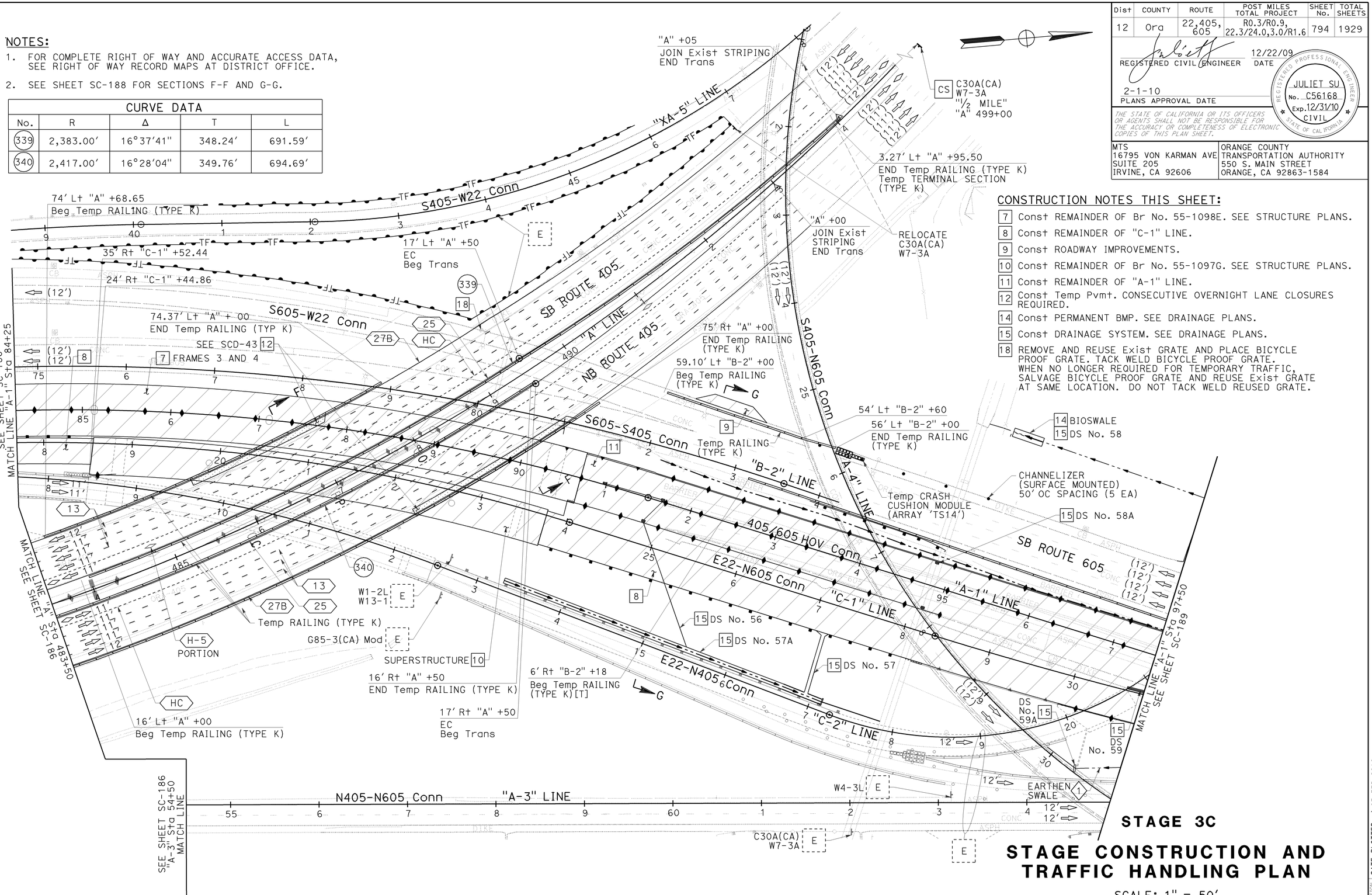

CONSTRUCTION NOTES THIS SHEET:

7 Const REMAINDER OF Br No. 55-1098E. SEE STRUCTURE PLANS.
8 Const REMAINDER OF "C-1" LINE.
9 Const ROADWAY IMPROVEMENTS.
10 Const REMAINDER OF Br No. 55-1097G. SEE STRUCTURE PLANS.
11 Const REMAINDER OF "A-1" LINE.
12 Const Temp Pvmt. CONSECUTIVE OVERNIGHT LANE CLOSURES REQUIRED.
14 Const PERMANENT BMP. SEE DRAINAGE PLANS.
15 Const DRAINAGE SYSTEM. SEE DRAINAGE PLANS.
18 REMOVE AND REUSE Exist GRATE AND PLACE BICYCLE PROOF GRATE. TACK WELD BICYCLE PROOF GRATE. WHEN NO LONGER REQUIRED FOR TEMPORARY TRAFFIC, SALVAGE BICYCLE PROOF GRATE AND REUSE Exist GRATE AT SAME LOCATION. DO NOT TACK WELD REUSED GRATE.

STAGE 3C

STAGE CONSTRUCTION AND TRAFFIC HANDLING PLAN

SCALE: 1" = 50′

SC-187

THIS PLAN ACCURATE FOR STAGE CONSTRUCTION AND TRAFFIC HANDLING WORK ONLY.

STATE OF CALIFORNIA - DEPARTMENT OF TRANSPORTATION — Caltrans®
CONSULTANT FUNCTIONAL SUPERVISOR: LEONARD SEQUEIRA
CALCULATED-DESIGNED BY: KELSIE ANDERSON
CHECKED BY: JULIET SU
REVISED BY: KLA
DATE REVISED: 12/22/09

LAST REVISION DATE PLOTTED => 03-FEB-2010
LAST REVISION TIME PLOTTED => 14:14
08-10-09

BORDER LAST REVISED 8/1/2008
RELATIVE BORDER SCALE IS IN INCHES 0 1 2 3
USERNAME => trcarol
DGN FILE => c07163ma187.dgn
CU 12235
EA 071631

Dist	COUNTY	ROUTE	POST MILES TOTAL PROJECT	SHEET No.	TOTAL SHEETS
12	Ora	22,405, 605	R0.3/R0.9, 22.3/24.0,3.0/R1.6	795	1929

REGISTERED CIVIL ENGINEER — 12/22/09 DATE

2-1-10
PLANS APPROVAL DATE

REGISTERED PROFESSIONAL ENGINEER
JULIET SU
No. C56168
Exp.12/31/10
CIVIL
STATE OF CALIFORNIA

THE STATE OF CALIFORNIA OR ITS OFFICERS OR AGENTS SHALL NOT BE RESPONSIBLE FOR THE ACCURACY OR COMPLETENESS OF ELECTRONIC COPIES OF THIS PLAN SHEET.

MTS
16795 VON KARMAN AVE
SUITE 205
IRVINE, CA 92606

ORANGE COUNTY
TRANSPORTATION AUTHORITY
550 S. MAIN STREET
ORANGE, CA 92863-1584

CONSTRUCTION NOTES THIS SHEET:

8 Const REMAINDER OF "C-1" LINE.
9 Const ROADWAY IMPROVEMENTS.
11 Const REMAINDER OF "A-1" LINE.
12 Const Temp Pvmt. CONSECUTIVE OVERNIGHT LANE CLOSURES REQUIRED.

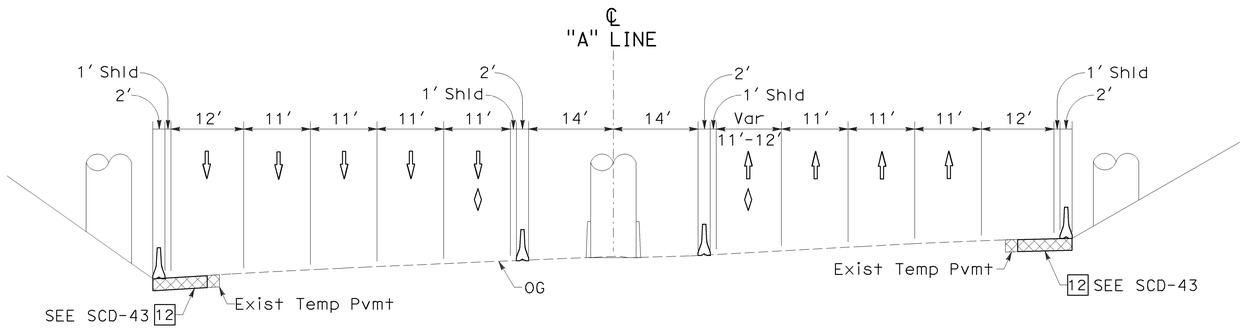

SECTION F-F

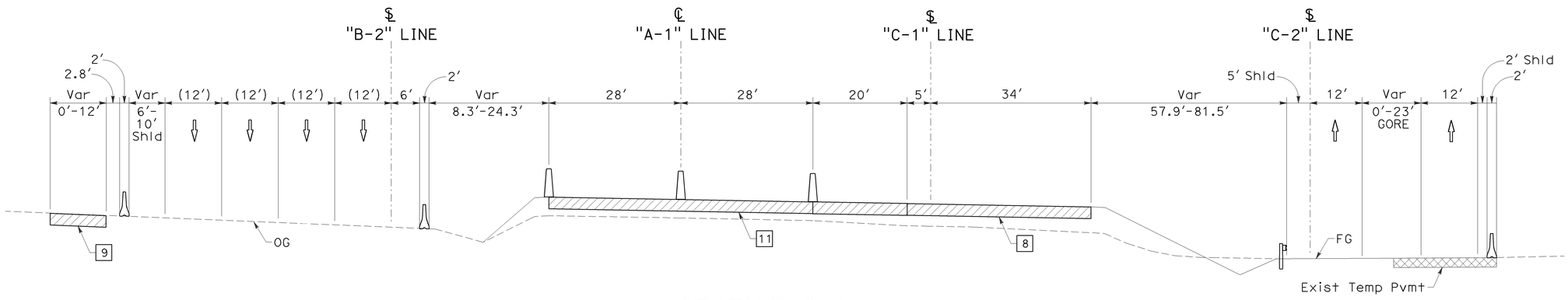

SECTION G-G

THIS PLAN ACCURATE FOR STAGE CONSTRUCTION AND TRAFFIC HANDLING WORK ONLY.

STAGE 3C

STAGE CONSTRUCTION AND TRAFFIC HANDLING PLAN

NO SCALE

SC-188

CALCULATED-DESIGNED BY	CHECKED BY	REVISED BY	DATE REVISED
KELSIE ANDERSON	JULIET SU	KLA	12/22/09

CONSULTANT FUNCTIONAL SUPERVISOR: LEONARD SEQUEIRA

STATE OF CALIFORNIA - DEPARTMENT OF TRANSPORTATION
Caltrans

LAST REVISION DATE PLOTTED => 03-FEB-2010
08-10-09 TIME PLOTTED => 14:14

Dist	COUNTY	ROUTE	POST MILES TOTAL PROJECT	SHEET No.	TOTAL SHEETS
12	Ora	22,405, 605	R0.3/R0.9, 22.3/24.0,3.0/R1.6	796	1929

REGISTERED CIVIL ENGINEER 12/22/09 DATE

2-1-10
PLANS APPROVAL DATE

REGISTERED PROFESSIONAL ENGINEER JULIET SU No. C56168 Exp. 12/31/10 CIVIL STATE OF CALIFORNIA

THE STATE OF CALIFORNIA OR ITS OFFICERS OR AGENTS SHALL NOT BE RESPONSIBLE FOR THE ACCURACY OR COMPLETENESS OF ELECTRONIC COPIES OF THIS PLAN SHEET.

MTS
16795 VON KARMAN AVE
SUITE 205
IRVINE, CA 92606

ORANGE COUNTY
TRANSPORTATION AUTHORITY
550 S. MAIN STREET
ORANGE, CA 92863-1584

NOTE:
1. FOR COMPLETE RIGHT OF WAY AND ACCURATE ACCESS DATA, SEE RIGHT OF WAY RECORD MAPS AT DISTRICT OFFICE.

CONSTRUCTION NOTES THIS SHEET:
- 2 Const OH SIGN. SEE SIGN PLANS.
- 8 Const REMAINDER OF "C-1" LINE.
- 11 Const REMAINDER OF "A-1" LINE.
- 14 Const PERMANENT BMP. SEE DRAINAGE PLANS.
- 15 Const DRAINAGE SYSTEM. SEE DRAINAGE PLANS.

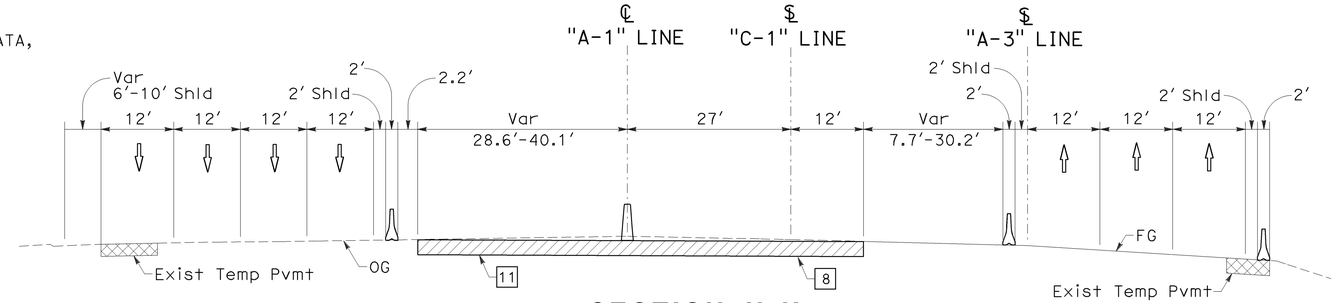

SECTION H-H
NO SCALE

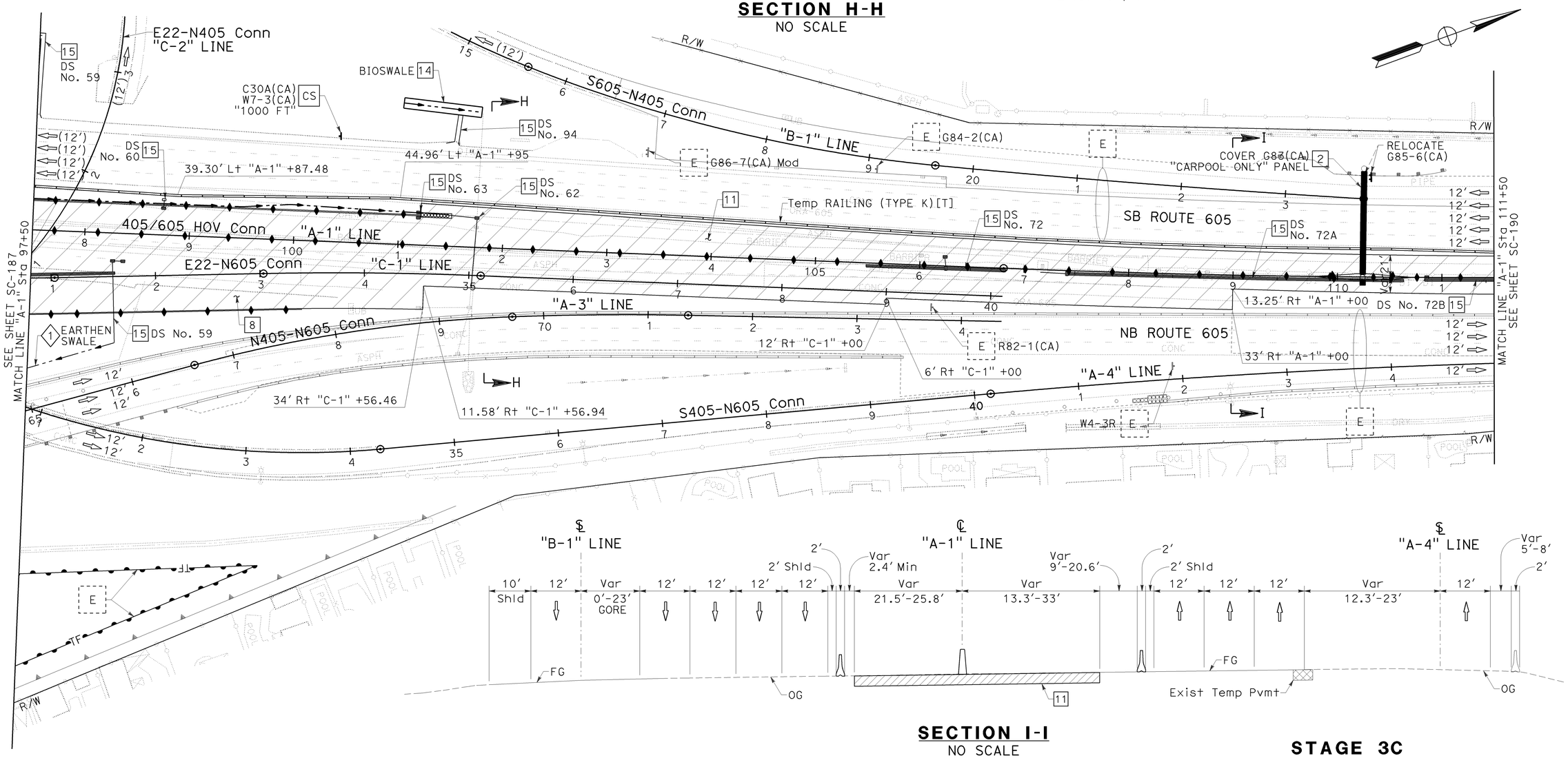

SECTION I-I
NO SCALE

STAGE 3C

STAGE CONSTRUCTION AND TRAFFIC HANDLING PLAN

SCALE: 1" = 50'

SC-189

THIS PLAN ACCURATE FOR STAGE CONSTRUCTION AND TRAFFIC HANDLING WORK ONLY.

STATE OF CALIFORNIA - DEPARTMENT OF TRANSPORTATION
Caltrans

CONSULTANT FUNCTIONAL SUPERVISOR: LEONARD SEQUEIRA
CALCULATED-DESIGNED BY: KELSIE ANDERSON
CHECKED BY: JULIET SU
REVISED BY: KLA
DATE REVISED: 12/22/09

LAST REVISION 08-10-09
DATE PLOTTED => 03-FEB-2010
TIME PLOTTED => 13:54

Dist	COUNTY	ROUTE	POST MILES TOTAL PROJECT	SHEET No.	TOTAL SHEETS
12	Ora	22,405, 605	R0.3/R0.9, 22.3/24.0,3.0/R1.6	797	1929

REGISTERED CIVIL ENGINEER — 12/22/09 DATE

2-1-10 PLANS APPROVAL DATE

REGISTERED PROFESSIONAL ENGINEER — JULIET SU — No. C56168 — Exp.12/31/10 — CIVIL — STATE OF CALIFORNIA

THE STATE OF CALIFORNIA OR ITS OFFICERS OR AGENTS SHALL NOT BE RESPONSIBLE FOR THE ACCURACY OR COMPLETENESS OF ELECTRONIC COPIES OF THIS PLAN SHEET.

MTS 16795 VON KARMAN AVE SUITE 205 IRVINE, CA 92606	ORANGE COUNTY TRANSPORTATION AUTHORITY 550 S. MAIN STREET ORANGE, CA 92863-1584

NOTE:

1. FOR COMPLETE RIGHT OF WAY AND ACCURATE ACCESS DATA, SEE RIGHT OF WAY RECORD MAPS AT DISTRICT OFFICE.

CONSTRUCTION NOTES THIS SHEET:

1 Const MEDIAN BARRIER.
2 Const OH SIGN. SEE SIGN PLANS.
11 Const REMAINDER OF "A-1" LINE.
13 Const PORTION OF NB Pvmt.
15 Const DRAINAGE SYSTEM. SEE DRAINAGE PLANS.

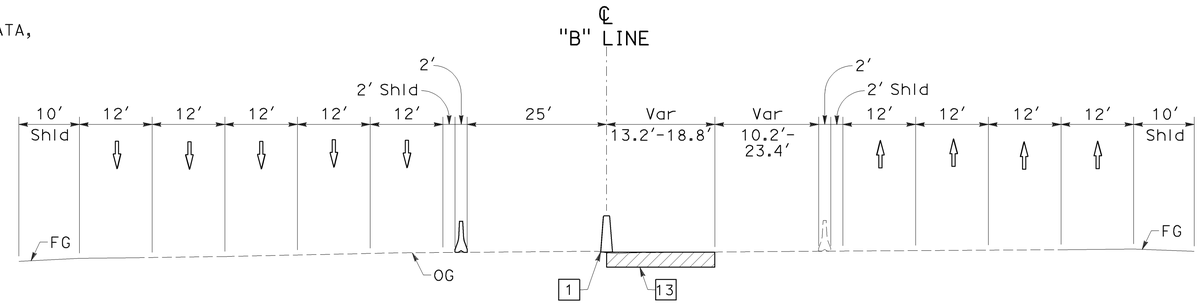

SECTION J-J
NO SCALE

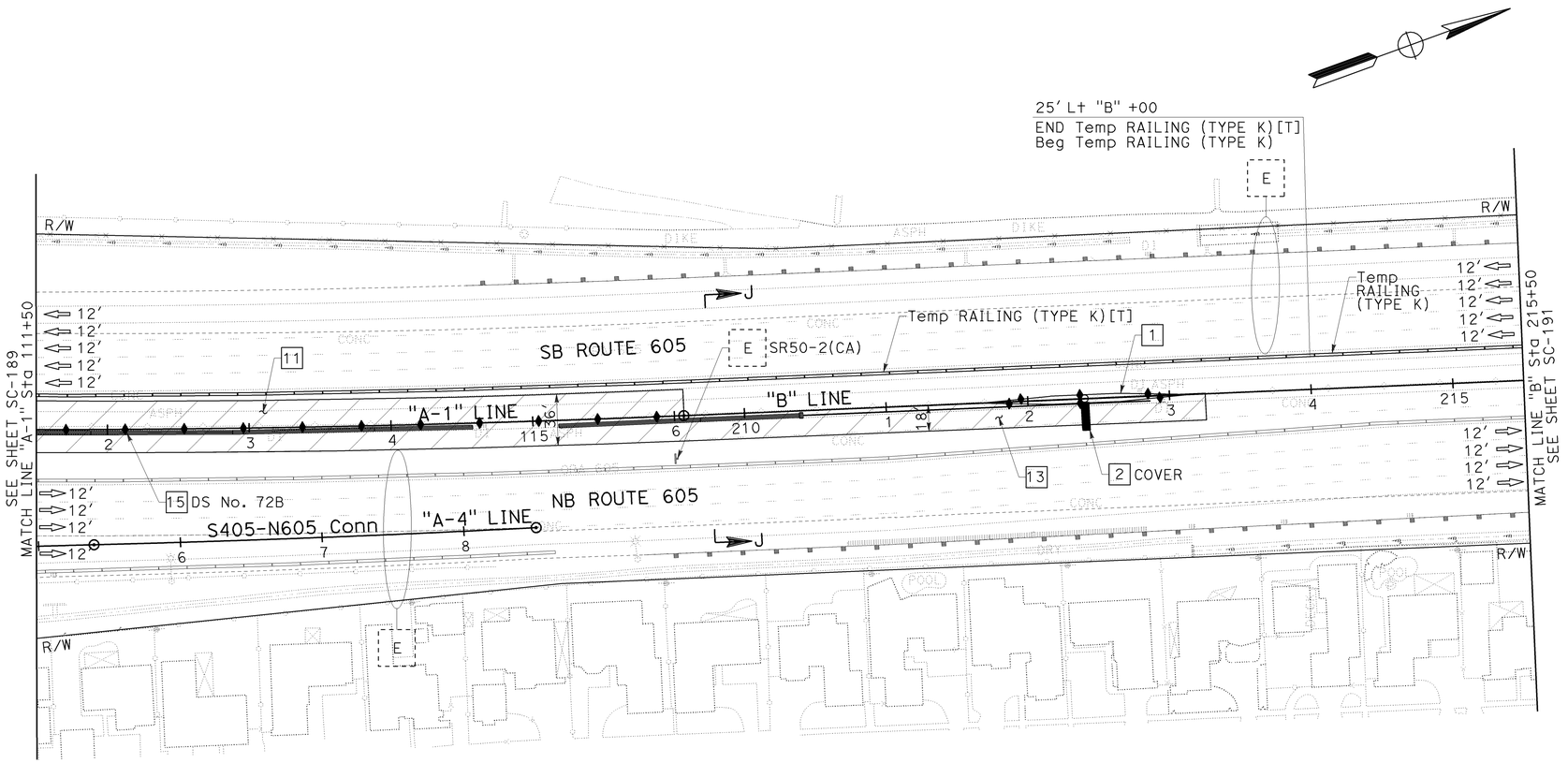

STAGE 3C

STAGE CONSTRUCTION AND TRAFFIC HANDLING PLANS

SCALE: 1" = 50'

SC-190

THIS PLAN ACCURATE FOR STAGE CONSTRUCTION AND TRAFFIC HANDLING WORK ONLY.

LAST REVISION DATE PLOTTED => 03-FEB-2010
08-10-09 TIME PLOTTED => 13:55

REVISED BY	DATE REVISED
KLA	12/22/09

CALCULATED-DESIGNED BY: KELSIE ANDERSON
CHECKED BY: JULIET SU
CONSULTANT FUNCTIONAL SUPERVISOR: LEONARD SEQUEIRA
STATE OF CALIFORNIA - DEPARTMENT OF TRANSPORTATION

BORDER LAST REVISED 8/1/2008 | RELATIVE BORDER SCALE IS IN INCHES 0 1 2 3 | USERNAME => trmnguye DGN FILE => c07163ma190.dgn | CU 12235 | EA 071631

Dist	COUNTY	ROUTE	POST MILES TOTAL PROJECT	SHEET No.	TOTAL SHEETS
12	Ora	22,405, 605	R0.3/R0.9, 22.3/24.0,3.0/R1.6	798	1929

REGISTERED CIVIL ENGINEER — 12/22/09 DATE

JULIET SU No. C56168 Exp.12/31/10 CIVIL — REGISTERED PROFESSIONAL ENGINEER — STATE OF CALIFORNIA

2-1-10
PLANS APPROVAL DATE

THE STATE OF CALIFORNIA OR ITS OFFICERS OR AGENTS SHALL NOT BE RESPONSIBLE FOR THE ACCURACY OR COMPLETENESS OF ELECTRONIC COPIES OF THIS PLAN SHEET.

MTS
16795 VON KARMAN AVE
SUITE 205
IRVINE, CA 92606

ORANGE COUNTY
TRANSPORTATION AUTHORITY
550 S. MAIN STREET
ORANGE, CA 92863-1584

NOTE:

1. FOR COMPLETE RIGHT OF WAY AND ACCURATE ACCESS DATA, SEE RIGHT OF WAY RECORD MAPS AT DISTRICT OFFICE.

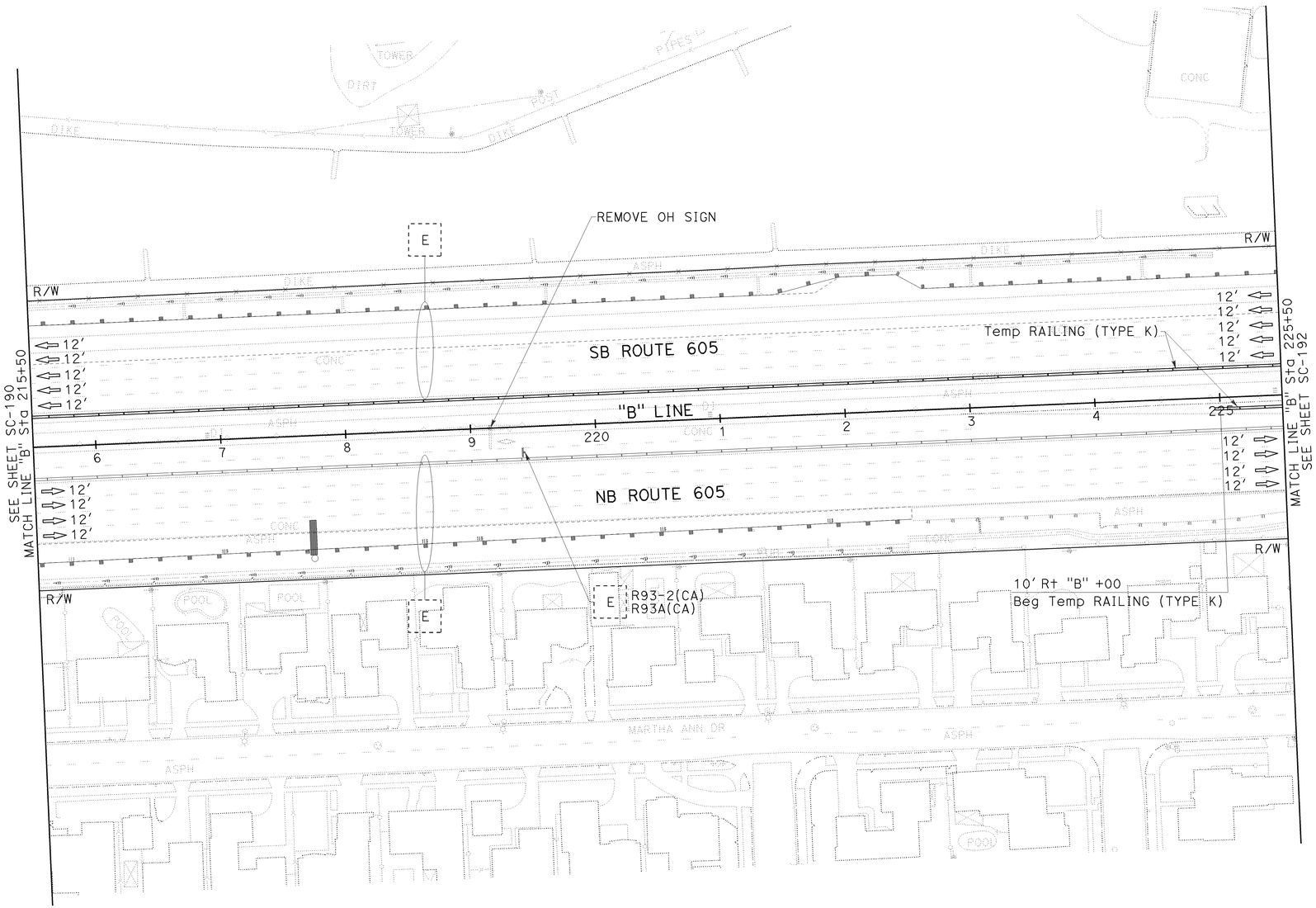

THIS PLAN ACCURATE FOR STAGE CONSTRUCTION AND TRAFFIC HANDLING WORK ONLY.

STAGE 3C

STAGE CONSTRUCTION AND TRAFFIC HANDLING PLAN

SCALE: 1" = 50′

SC-191

REVISED BY	DATE REVISED
KLA	12/22/09

CALCULATED-DESIGNED BY: KELSIE ANDERSON
CHECKED BY: JULIET SU
CONSULTANT FUNCTIONAL SUPERVISOR: LEONARD SEQUEIRA

STATE OF CALIFORNIA - DEPARTMENT OF TRANSPORTATION
Caltrans

LAST REVISION DATE PLOTTED => 03-FEB-2010
08-10-09 TIME PLOTTED => 13:55

BORDER LAST REVISED 8/1/2008

RELATIVE BORDER SCALE IS IN INCHES 0 1 2 3

USERNAME => trmnguye
DGN FILE => c07163ma191.dgn

CU 12235

EA 071631

Dist	COUNTY	ROUTE	POST MILES TOTAL PROJECT	SHEET No.	TOTAL SHEETS
12	Ora	22,405, 605	R0.3/R0.9, 22.3/24.0,3.0/R1.6	799	1929

REGISTERED CIVIL ENGINEER — 12/22/09 DATE

2-1-10
PLANS APPROVAL DATE

REGISTERED PROFESSIONAL ENGINEER
JULIET SU
No. C56168
Exp.12/31/10
CIVIL
STATE OF CALIFORNIA

THE STATE OF CALIFORNIA OR ITS OFFICERS OR AGENTS SHALL NOT BE RESPONSIBLE FOR THE ACCURACY OR COMPLETENESS OF ELECTRONIC COPIES OF THIS PLAN SHEET.

MTS
16795 VON KARMAN AVE
SUITE 205
IRVINE, CA 92606

ORANGE COUNTY
TRANSPORTATION AUTHORITY
550 S. MAIN STREET
ORANGE, CA 92863-1584

NOTE:

1. FOR COMPLETE RIGHT OF WAY AND ACCURATE ACCESS DATA, SEE RIGHT OF WAY RECORD MAPS AT DISTRICT OFFICE.

CONSTRUCTION NOTE THIS SHEET:

1 Const MEDIAN BARRIER.

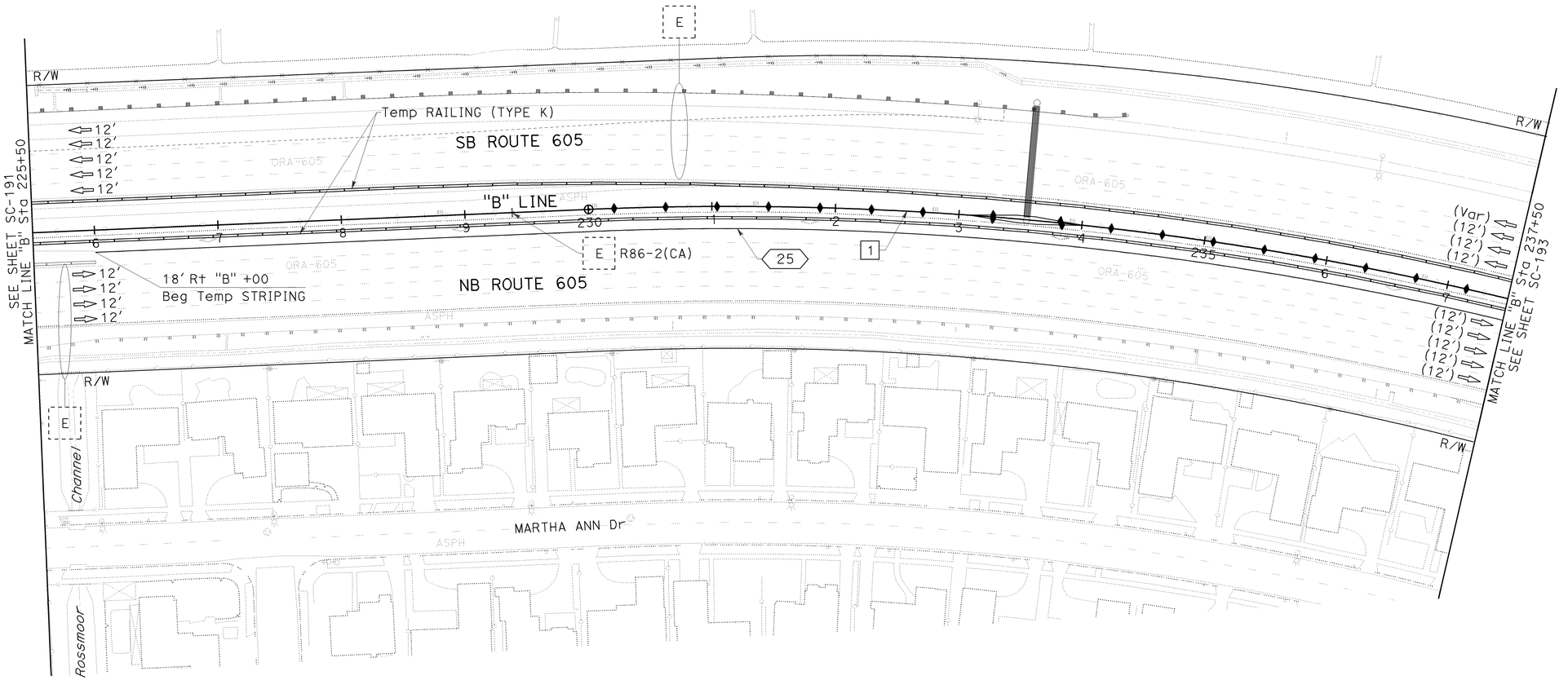

STAGE 3C

STAGE CONSTRUCTION AND TRAFFIC HANDLING PLAN

SCALE: 1" = 50′

SC-192

THIS PLAN ACCURATE FOR STAGE CONSTRUCTION AND TRAFFIC HANDLING WORK ONLY.

REVISED BY	DATE REVISED
KLA	12/22/09

CALCULATED-DESIGNED BY: KELSIE ANDERSON
CHECKED BY: JULIET SU
CONSULTANT FUNCTIONAL SUPERVISOR: LEONARD SEQUEIRA
STATE OF CALIFORNIA - DEPARTMENT OF TRANSPORTATION
Caltrans

LAST REVISION 08-10-09
DATE PLOTTED => 03-FEB-2010
TIME PLOTTED => 13:55

BORDER LAST REVISED 8/1/2008
RELATIVE BORDER SCALE IS IN INCHES 0 1 2 3
USERNAME => trmnguye
DGN FILE => c07163ma192.dgn
CU 12235
EA 071631

Dist	COUNTY	ROUTE	POST MILES TOTAL PROJECT	SHEET No.	TOTAL SHEETS
12	Ora	22,405, 605	R0.3/R0.9, 22.3/24.0,3.0/R1.6	800	1929

REGISTERED CIVIL ENGINEER 12/22/09 DATE

2-1-10
PLANS APPROVAL DATE

REGISTERED PROFESSIONAL ENGINEER JULIET SU No. C56168 Exp. 12/31/10 CIVIL STATE OF CALIFORNIA

THE STATE OF CALIFORNIA OR ITS OFFICERS OR AGENTS SHALL NOT BE RESPONSIBLE FOR THE ACCURACY OR COMPLETENESS OF ELECTRONIC COPIES OF THIS PLAN SHEET.

MTS
16795 VON KARMAN AVE
SUITE 205
IRVINE, CA 92606

ORANGE COUNTY
TRANSPORTATION AUTHORITY
550 S. MAIN STREET
ORANGE, CA 92863-1584

NOTE:

1. FOR COMPLETE RIGHT OF WAY AND ACCURATE ACCESS DATA, SEE RIGHT OF WAY RECORD MAPS AT DISTRICT OFFICE.

CONSTRUCTION NOTES THIS SHEET:

1 Const MEDIAN BARRIER

9 Const OH SIGN. SEE SIGN PLANS. CONSECUTIVE OVERNIGHT LANE CLOSURES REQUIRED.

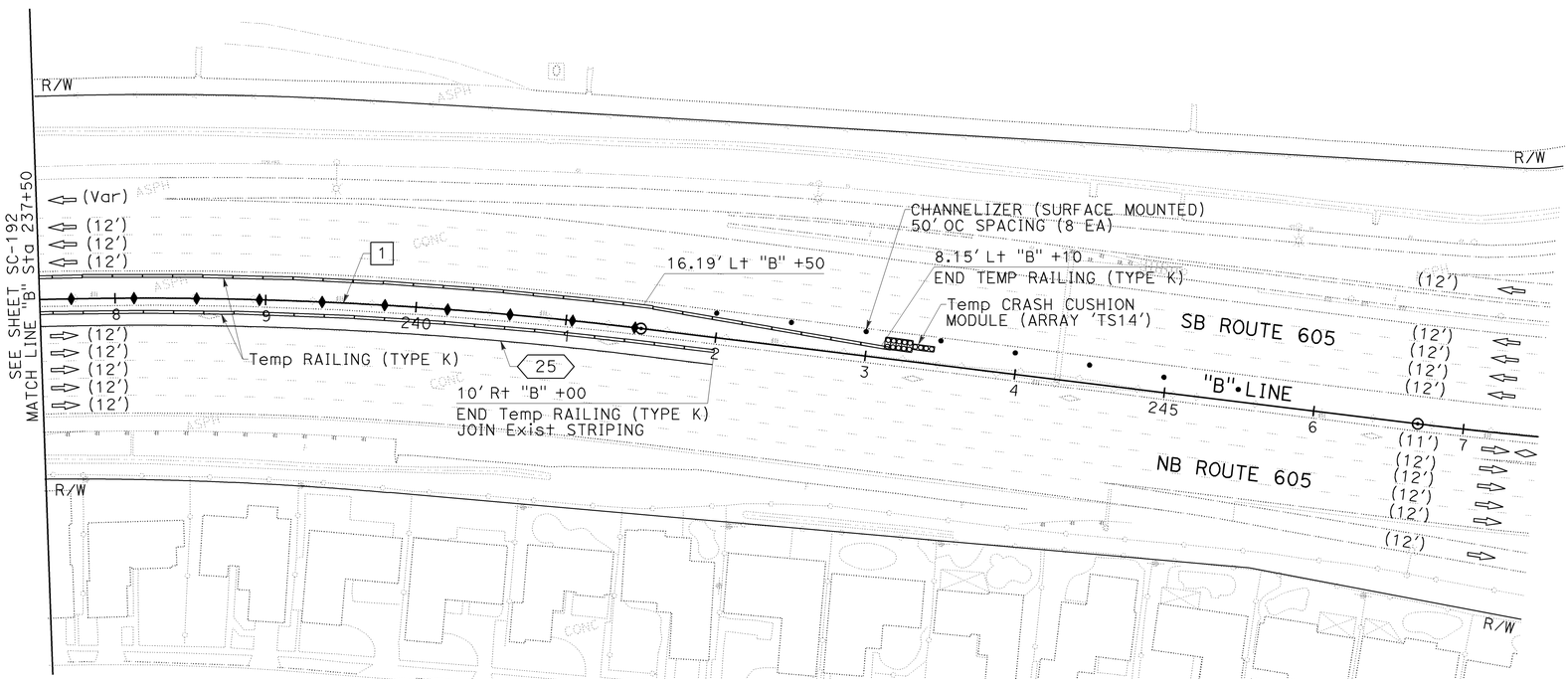

STAGE 3C

STAGE CONSTRUCTION AND TRAFFIC HANDLING PLAN

SCALE: 1" = 50'

SC-193

THIS PLAN ACCURATE FOR STAGE CONSTRUCTION AND TRAFFIC HANDLING WORK ONLY.

STATE OF CALIFORNIA - DEPARTMENT OF TRANSPORTATION
Caltrans

CONSULTANT FUNCTIONAL SUPERVISOR: LEONARD SEQUEIRA
CALCULATED-DESIGNED BY: KELSIE ANDERSON
CHECKED BY: JULIET SU
REVISED BY: KLA
DATE REVISED: 12/22/09

LAST REVISION 08-10-09
DATE PLOTTED => 03-FEB-2010
TIME PLOTTED => 13:55