DIST	COUNTY	ROUTE	POST MILES TOTAL PROJECT	SHEET No	TOTAL SHEETS
12	Ora	22,405, 605	R0.3/R0.9, 22.3/24.0,3.0/R1.6	1601	1929

REGISTERED CIVIL ENGINEER 07-27-09 DATE

2-1-10
PLANS APPROVAL DATE

REGISTERED PROFESSIONAL ENGINEER Paul A. Morel No. C 68491 Exp. 9-30-09 CIVIL STATE OF CALIFORNIA

The State of California or its officers or agents shall not be responsible for the accuracy or completeness of electronic copies of this plan sheet.

OCTA
550 SOUTH MAIN STREET
ORANGE, CA 92863

PBS&J
625 THE CITY DRIVE SOUTH, SUITE 200
ORANGE, CA 92868

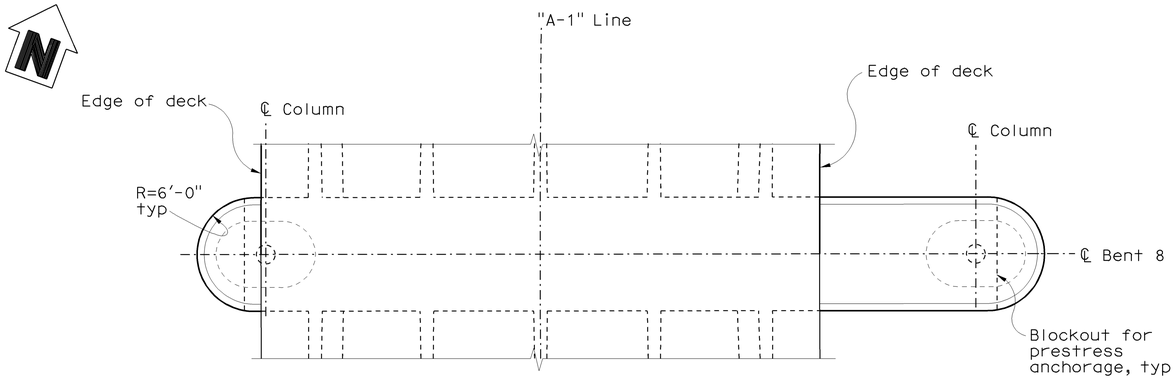

PLAN
1/8" = 1'-0"

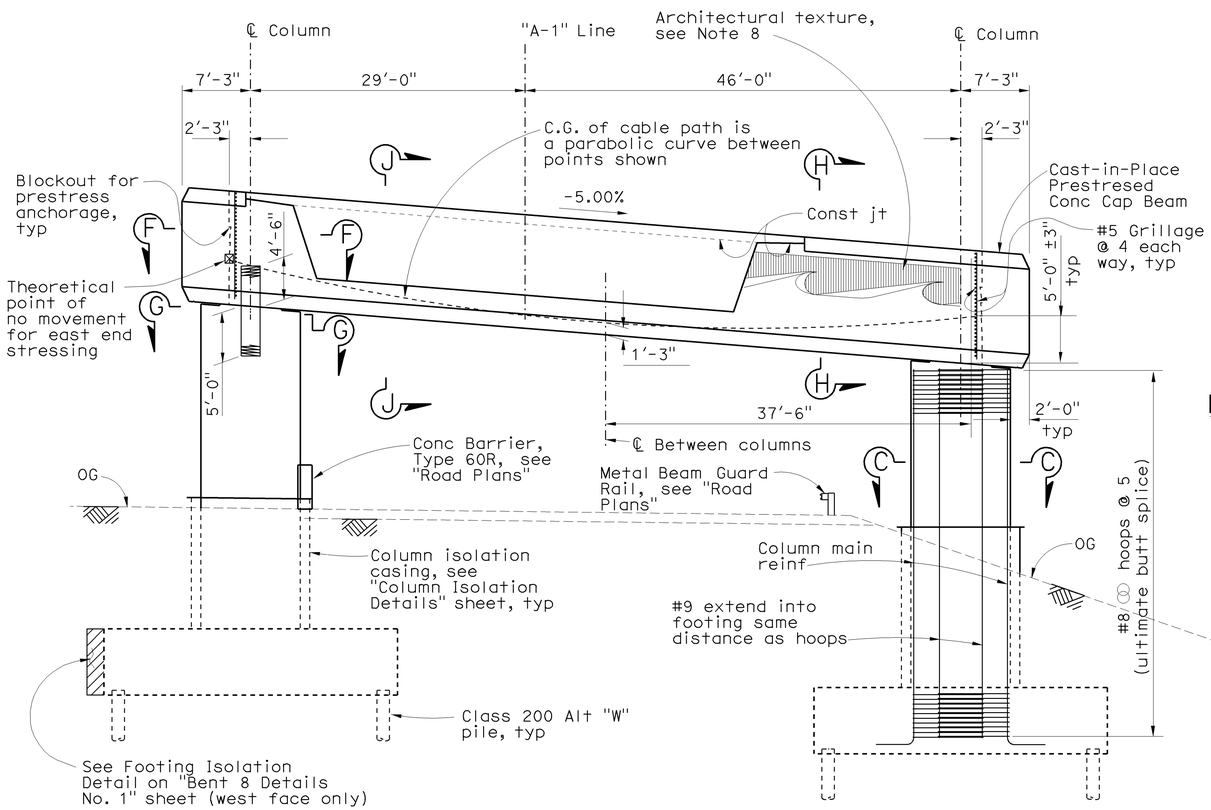

ELEVATION (B8-5)
1/8" = 1'-0"

PRESTRESSING NOTES

270 Ksi Low Relaxation Strand:

Pjack = 13,600 Kips

Anchor Set = 3/8 inch

Distribution of prestress force (Pjack) shall be symmetrical about ℄ Bent 8

Concrete: f'_c = 5,000 Psi @ 28 days
f'_{ci} = 4,000 psi @ time of stressing

Contractor shall submit elongation calculations based on initial stress at
⊠ = 0.930 times jacking stress.

One end stressing shall be performed from east end.
Design is based on friction curvature coefficient μ = 0.15 and friction wobble coefficient k= 0.0002/ft
The prestressing duct diameter shall not exceed 4½".

Prestressing Sequence:

Stressing shall not take place until the deck has been placed and reached required strength

Pjack to be applied in stages:

Stage 1: Stress outrigger cap to 50% of Pjack = 6,800 Kips

Stage 2: Stress Frame 2 girders to 50% of Pjack = 10,000 Kips

Stage 3: Stress outrigger cap to 100% of Pjack = 13,600 Kips

Stage 4: Stress Frame 2 girders to 100% of Pjack = 20,000 Kips

At no time during stressing operations shall more than 1/6 of the total outrigger prestressing force be applied eccentrically about the center line of the bent.

No removal of falsework is allowed until all stressing and grouting is complete.

For girder prestressing, see "Girder Layout" sheets

NOTES

1. No splices allowed in column main reinforcement.
2. Details are similar at both columns.
3. For Section C-C, see "Bent Detail No. 1" sheet.
4. Concrete barriers not shown.
5. All piles not shown.
6. For Sections H-H & J-J, see "Bent 8 Details No. 1" sheet.
7. For Sections F-F & G-G, see "Bent 4 Details No. 1" sheet.
8. See "Architectural Details No. 2" sheet for Architectural texture details

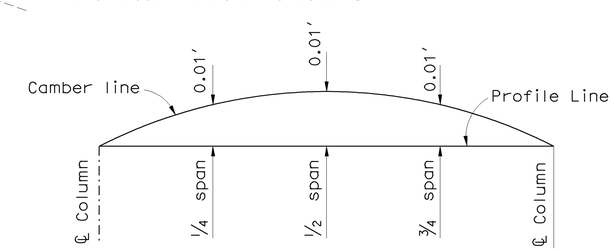

OUTRIGGER CAMBER DIAGRAM
No Scale

Camber values shown do not include allowance for falsework settlement

Sudhakar Vatti
DESIGN OVERSIGHT Sudhakar Vatti
8-10-09
SIGN OFF DATE

	BY	CHECKED
DESIGN	P. Morel	J. Holombo/S. Megally
DETAILS	N. Shu	J. Holombo
QUANTITIES	V. Nong	L. Khaleghi

PREPARED FOR THE STATE OF CALIFORNIA DEPARTMENT OF TRANSPORTATION

Alaedin Moubayed
PROJECT ENGINEER

BRIDGE NO. 55-1098E
POST MILE 24.02

405/605 HOV CONNECTOR
BENT 8 LAYOUT

DESIGN DETAIL SHEET (ENGLISH) (REV. 2/25/05)

ORIGINAL SCALE IN INCHES FOR REDUCED PLANS 0 1 2 3

CU 12235
EA 071631

DISREGARD PRINTS BEARING EARLIER REVISION DATES

REVISION DATES (PRELIMINARY STAGE ONLY) 02/18/08 06/02/08 09/29/08 10/19/08 03/20/09 04/06/09 07/27/09

SHEET 30 OF 87

FILE => 55-1098e-h-b081o.dgn

USERNAME => tfriehard DATE PLOTTED => 03-FEB-2010 TIME PLOTTED => 07:55

DIST	COUNTY	ROUTE	POST MILES TOTAL PROJECT	SHEET No	TOTAL SHEETS
12	Ora	22,405, 605	R0.3/R0.9, 22.3/24.0,3.0/R1.6	1602	1929

REGISTERED CIVIL ENGINEER 07-27-09 DATE

2-1-10
PLANS APPROVAL DATE

The State of California or its officers or agents shall not be responsible for the accuracy or completeness of electronic copies of this plan sheet.

REGISTERED PROFESSIONAL ENGINEER Paul A. Morel No. C 68491 Exp. 9-30-09 CIVIL STATE OF CALIFORNIA

OCTA
550 SOUTH MAIN STREET
ORANGE, CA 92863

PBS&J
625 THE CITY DRIVE SOUTH, SUITE 200
ORANGE, CA 92868

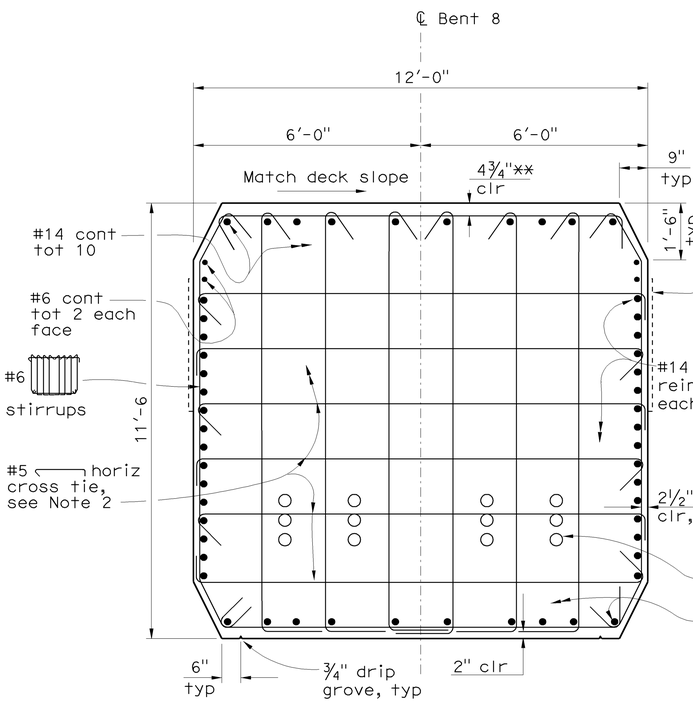

SECTION H-H
½" = 1'-0"

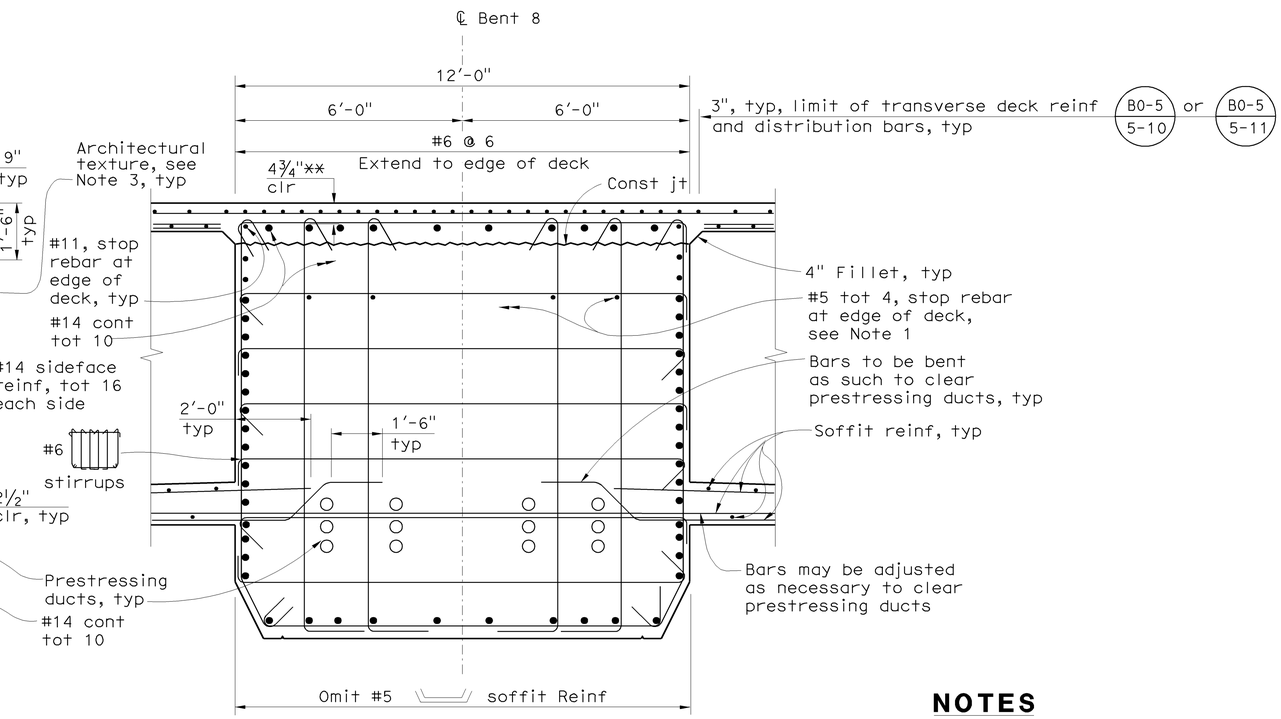

For information not shown, see Section H-H

SECTION J-J
½" = 1'-0"

** Clearance to cap main reinf.

NOTES

1. Place reinforcement to clear longitudinal prestressing ducts
2. For limits of stirrup and horizontal cross tie reinforcement, see Sideface Reinforcement Layout on "Bent 8 Details No. 2" sheet
3. See "Architectural Details No. 2" sheet for Architectural texture details.

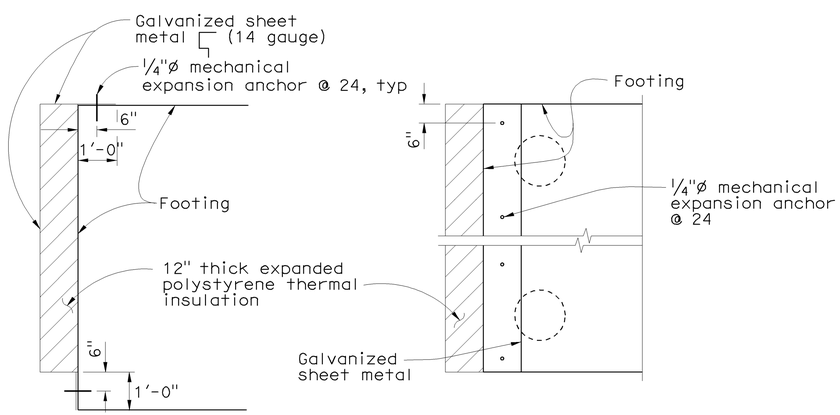

ELEVATION **PLAN**

FOOTING ISOLATION DETAIL
½" = 1'-0"

Sudhakar Vatti
DESIGN OVERSIGHT Sudhakar Vatti
8-10-09
SIGN OFF DATE

	BY	CHECKED
DESIGN	P. Morel	J. Holombo/S. Megally
DETAILS	N. Shu	J. Holombo
QUANTITIES	V. Nong	L. Khaleghi

PREPARED FOR THE STATE OF CALIFORNIA DEPARTMENT OF TRANSPORTATION

Alaedin Moubayed
PROJECT ENGINEER

BRIDGE NO. 55-1098E
POST MILE 24.02

405/605 HOV CONNECTOR
BENT 8 DETAILS NO. 1

DESIGN DETAIL SHEET (ENGLISH) (REV. 2/25/05)

ORIGINAL SCALE IN INCHES FOR REDUCED PLANS 0 1 2 3

CU 12235
EA 071631

DISREGARD PRINTS BEARING EARLIER REVISION DATES

REVISION DATES (PRELIMINARY STAGE ONLY) 02/18/08 06/02/08 09/29/08 10/13/08 03/20/09 04/06/09 07/27/09

SHEET 31 OF 87

FILE => 55-1098e-h-b08dt01.dgn

USERNAME => rfriehard DATE PLOTTED => 03-FEB-2010 TIME PLOTTED => 07:55

DIST	COUNTY	ROUTE	POST MILES TOTAL PROJECT	SHEET No	TOTAL SHEETS
12	Ora	22,405, 605	R0.3/R0.9, 22.3/24.0,3.0/R1.6	1603	1929

REGISTERED CIVIL ENGINEER 07-27-09 DATE

2-1-10
PLANS APPROVAL DATE

The State of California or its officers or agents shall not be responsible for the accuracy or completeness of electronic copies of this plan sheet.

REGISTERED PROFESSIONAL ENGINEER Paul A. Morel No. C 68491 Exp. 9-30-09 CIVIL STATE OF CALIFORNIA

OCTA
550 SOUTH MAIN STREET
ORANGE, CA 92863

PBS&J
625 THE CITY DRIVE SOUTH, SUITE 200
ORANGE, CA 92868

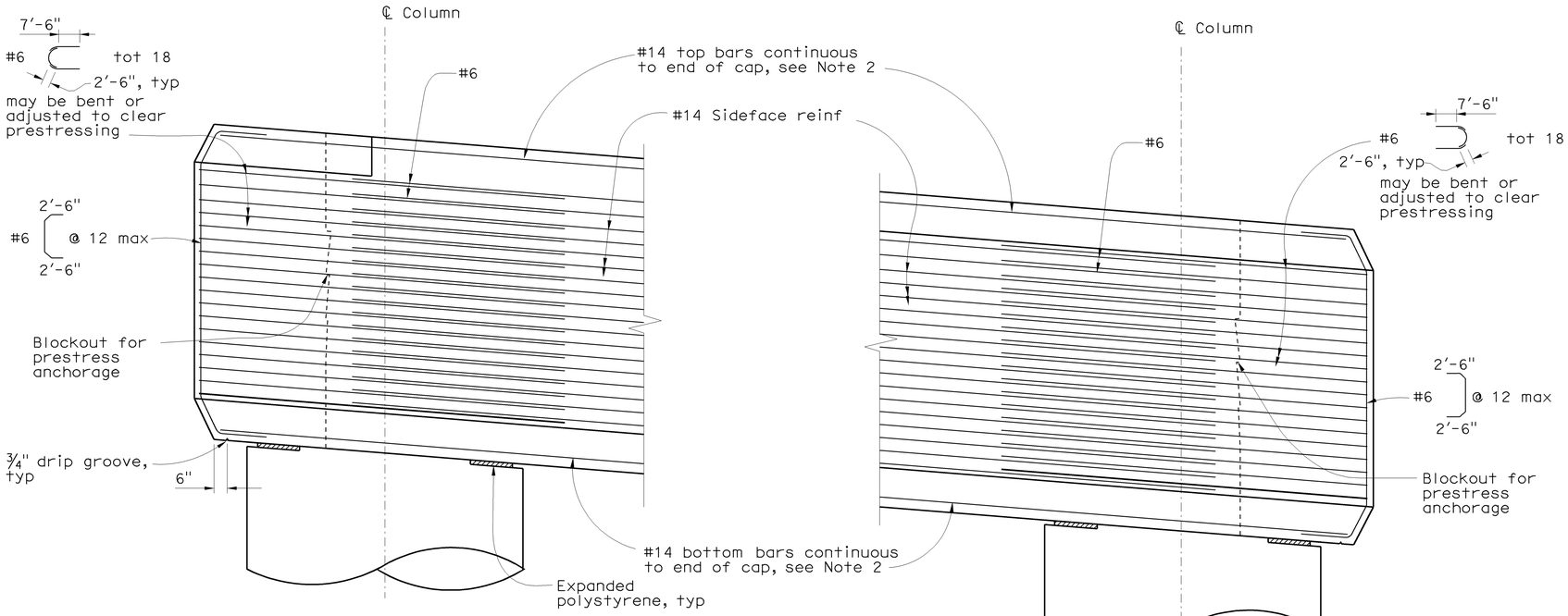

PART ELEVATION

⅜" = 1'-0"

NOTES

1. No splices allowed.
2. Splices shall conform to the requirements of "Service Butt Splice". Bars shall be spliced within 10'-0" from "A-1" Line.

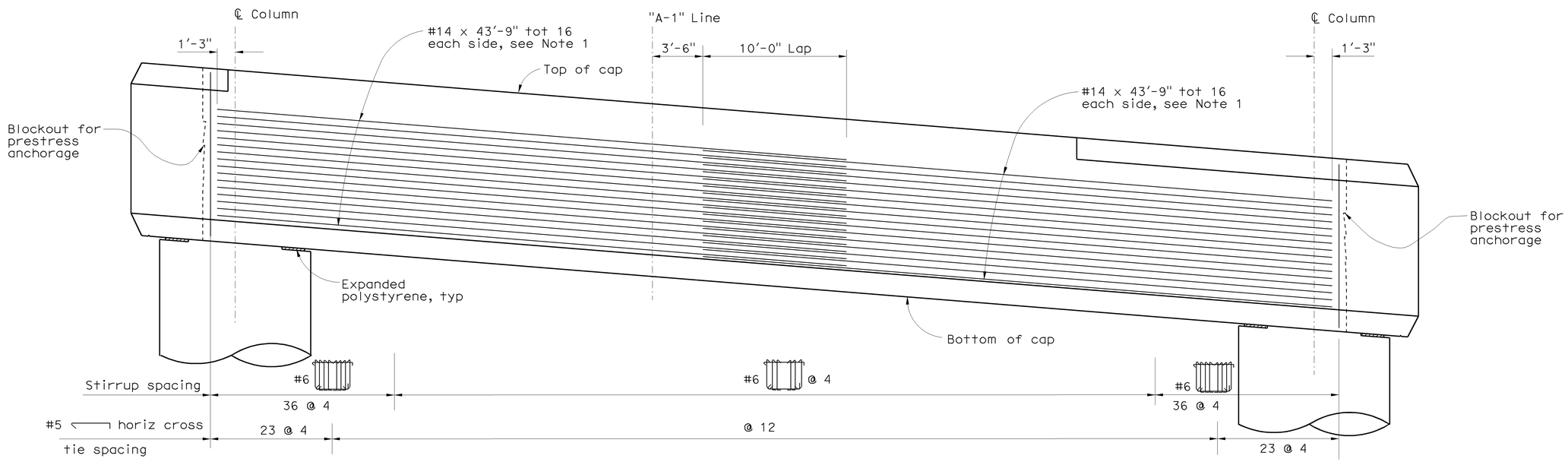

SIDEFACE REINFORCEMENT LAYOUT

¼" = 1'-0"

Sudhakar Vatti
DESIGN OVERSIGHT Sudhakar Vatti
8-10-09
SIGN OFF DATE

	BY	CHECKED
DESIGN	P. Morel	J. Holombo/S. Megally
DETAILS	N. Shu	J. Holombo
QUANTITIES	V. Nong	L. Khaleghi

PREPARED FOR THE STATE OF CALIFORNIA DEPARTMENT OF TRANSPORTATION

Alaedin Moubayed
PROJECT ENGINEER

BRIDGE NO. 55-1098E
POST MILE 24.02

405/605 HOV CONNECTOR
BENT 8 DETAILS NO. 2

DESIGN DETAIL SHEET (ENGLISH) (REV. 2/25/05)

ORIGINAL SCALE IN INCHES FOR REDUCED PLANS 0 1 2 3

CU 12235
EA 071631

DISREGARD PRINTS BEARING EARLIER REVISION DATES

REVISION DATES (PRELIMINARY STAGE ONLY) 02/18/08 06/20/08 09/29/08 10/14/08 03/20/09 04/06/09 07/27/09

SHEET 32 OF 87

FILE => 55-1098e-h-b08dt02.dgn

USERNAME => trlenard DATE PLOTTED => 03-FEB-2010 TIME PLOTTED => 07:56

DIST	COUNTY	ROUTE	POST MILES TOTAL PROJECT	SHEET No	TOTAL SHEETS
12	Ora	22,405, 605	R0.3/R0.9, 22.3/24.0,3.0/R1.6	1604	1929

REGISTERED CIVIL ENGINEER — DATE 07-27-09

2-1-10
PLANS APPROVAL DATE

The State of California or its officers or agents shall not be responsible for the accuracy or completeness of electronic copies of this plan sheet.

REGISTERED PROFESSIONAL ENGINEER — Paul A. Morel — No. C 68491 — Exp. 9-30-09 — CIVIL — STATE OF CALIFORNIA

OCTA
550 SOUTH MAIN STREET
ORANGE, CA 92863

PBS&J
625 THE CITY DRIVE SOUTH, SUITE 200
ORANGE, CA 92868

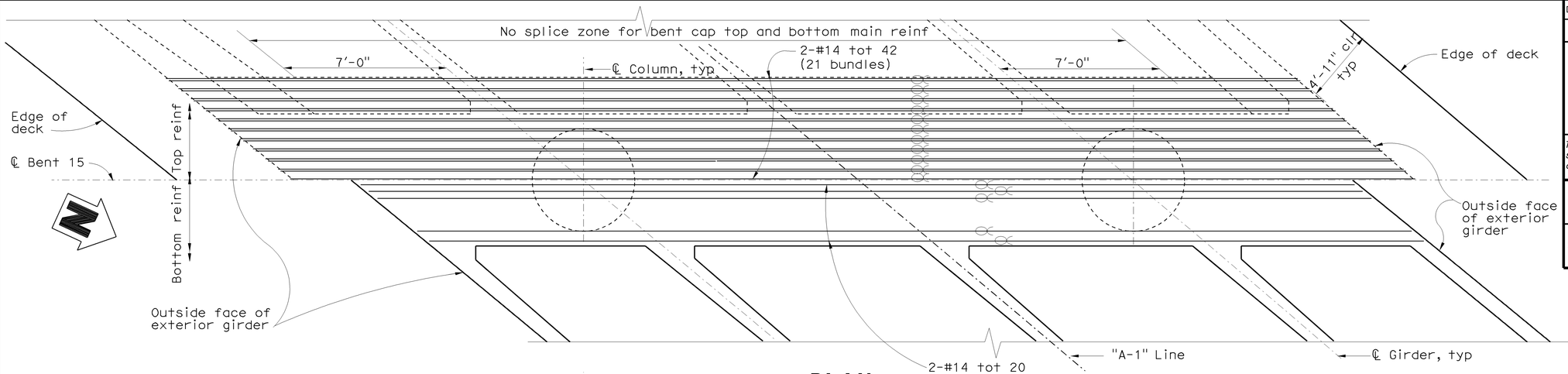

PLAN
1/4" = 1'-0"

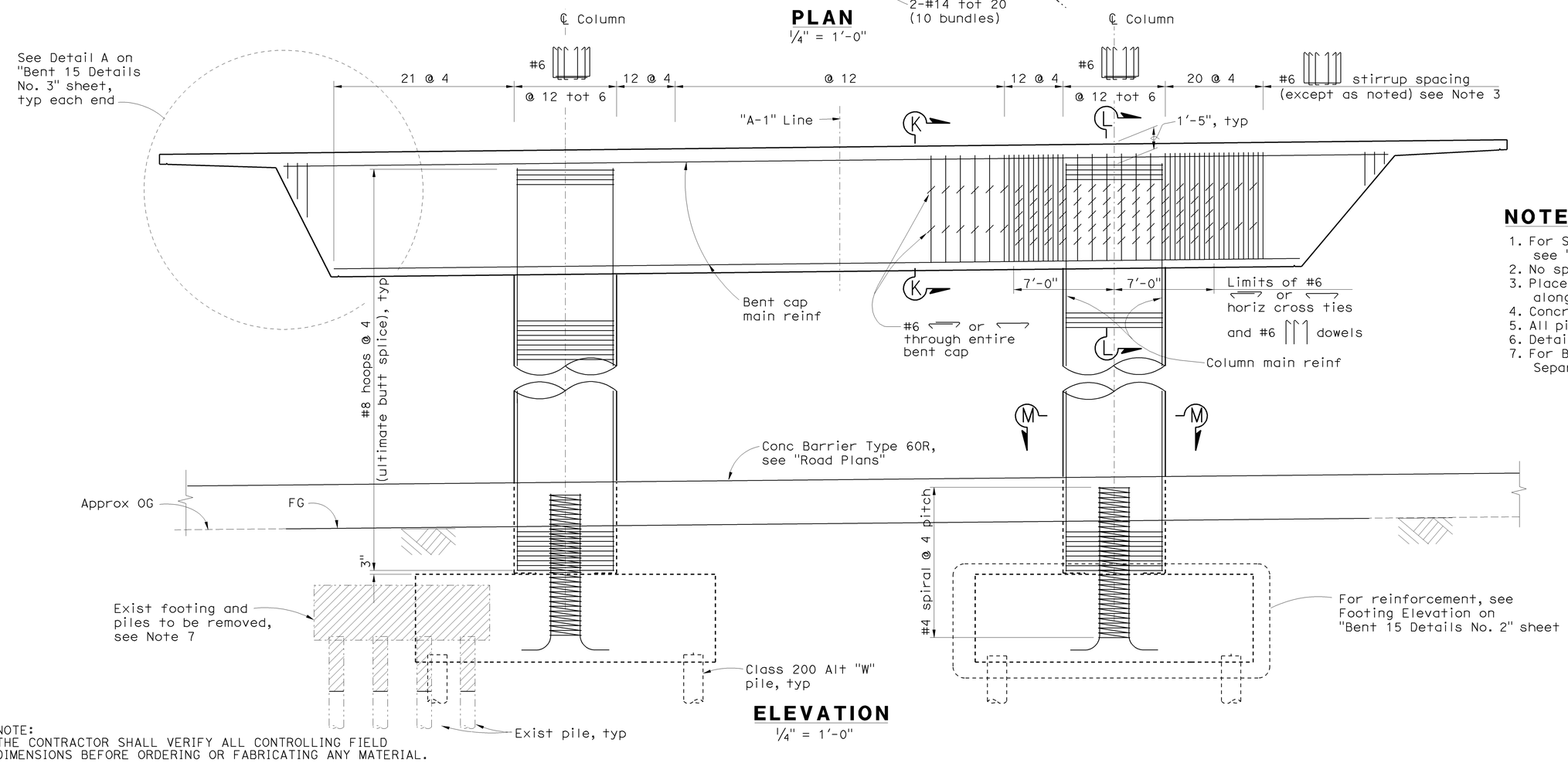

ELEVATION
1/4" = 1'-0"

LEGEND

- Denotes bundled bars
- Bridge Removal, see Note 7

NOTES

1. For Sections K-K, L-L and M-M, see "Bent 15 Details No. 1" sheet.
2. No splices allowed in column main reinf
3. Place stirrup reinf normal to and space along ℄ Bent.
4. Concrete barriers not shown.
5. All piles not shown.
6. Details are similar at both columns.
7. For Bridge Removal, see "E22-N605/405 Separation (Replace)" plans

NOTE:
THE CONTRACTOR SHALL VERIFY ALL CONTROLLING FIELD DIMENSIONS BEFORE ORDERING OR FABRICATING ANY MATERIAL.

Sudhakar Vatti
DESIGN OVERSIGHT — Sudhakar Vatti
8-10-09
SIGN OFF DATE

	BY	CHECKED
DESIGN	P. Morel	J. Holombo/S. Megally
DETAILS	N. Shu	J. Holombo
QUANTITIES	V. Nong	L. Khaleghi

PREPARED FOR THE STATE OF CALIFORNIA DEPARTMENT OF TRANSPORTATION

Alaedin Moubayed
PROJECT ENGINEER

CU 12235
EA 071631

BRIDGE NO. 55-1098E
POST MILE 24.02

405/605 HOV CONNECTOR
BENT 15 LAYOUT

DESIGN DETAIL SHEET (ENGLISH) (REV. 2/25/05)

ORIGINAL SCALE IN INCHES FOR REDUCED PLANS 0 1 2 3

DISREGARD PRINTS BEARING EARLIER REVISION DATES — REVISION DATES (PRELIMINARY STAGE ONLY) 02/18/08 06/02/08 09/29/08 10/19/08 03/26/09 04/06/09 07/27/09

SHEET 33 OF 87

FILE => 55-1098e-h-b151o.dgn

USERNAME => rfrenord DATE PLOTTED => 03-FEB-2010 TIME PLOTTED => 07:56

DIST	COUNTY	ROUTE	POST MILES TOTAL PROJECT	SHEET No	TOTAL SHEETS
12	Ora	22,405, 605	R0.3/R0.9, 22.3/24.0,3.0/R1.6	1605	1929

REGISTERED CIVIL ENGINEER 07-27-09 DATE

2-1-10
PLANS APPROVAL DATE

REGISTERED PROFESSIONAL ENGINEER Paul A. Morel No. C 68491 Exp. 9-30-09 CIVIL STATE OF CALIFORNIA

The State of California or its officers or agents shall not be responsible for the accuracy or completeness of electronic copies of this plan sheet.

OCTA
550 SOUTH MAIN STREET
ORANGE, CA 92863

PBS&J
625 THE CITY DRIVE SOUTH, SUITE 200
ORANGE, CA 92868

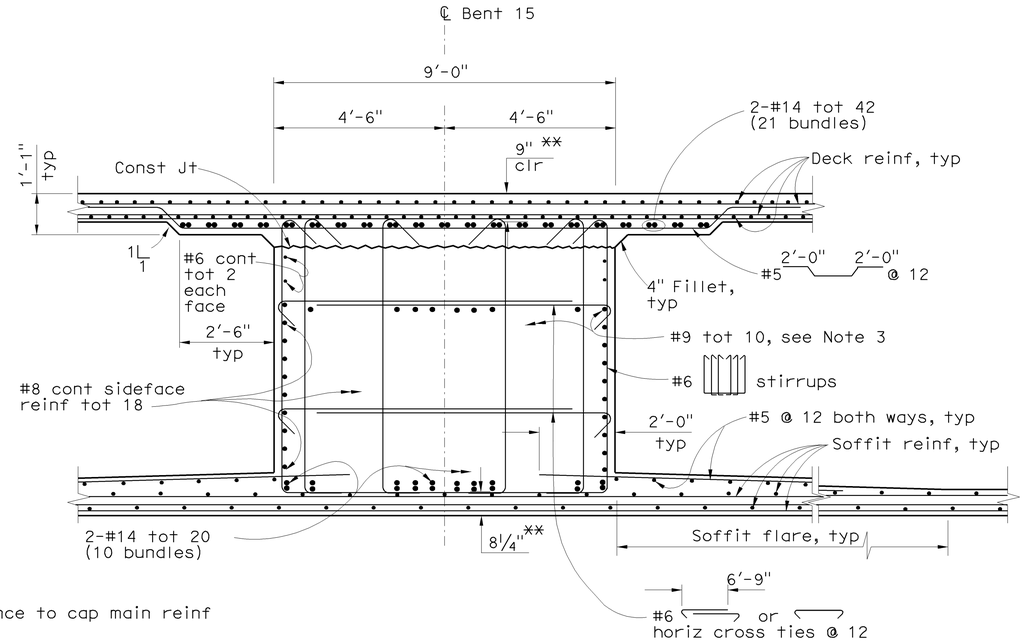

** Clearance to cap main reinf

SECTION K-K
½" = 1'-0"

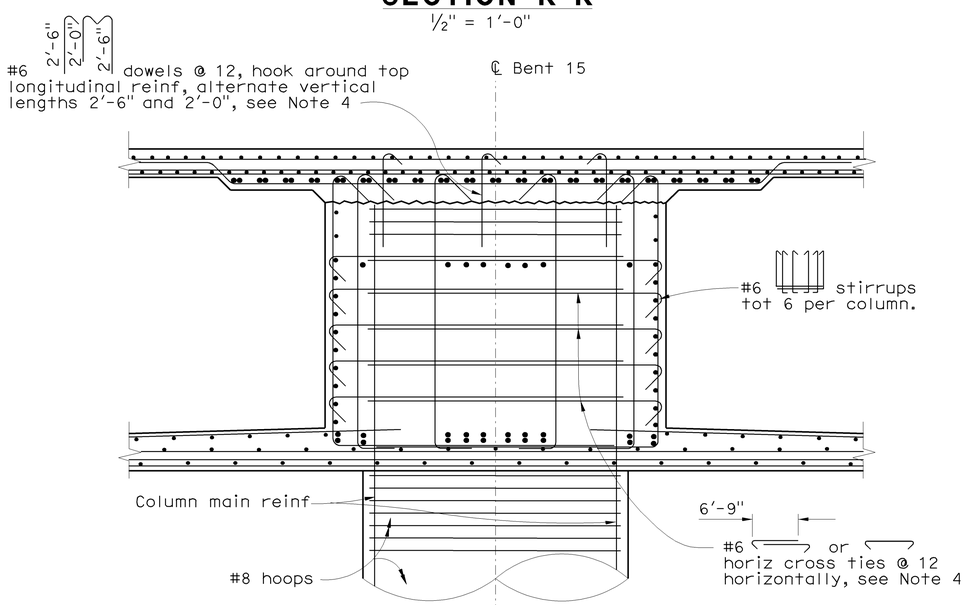

SECTION L-L
½" = 1'-0"

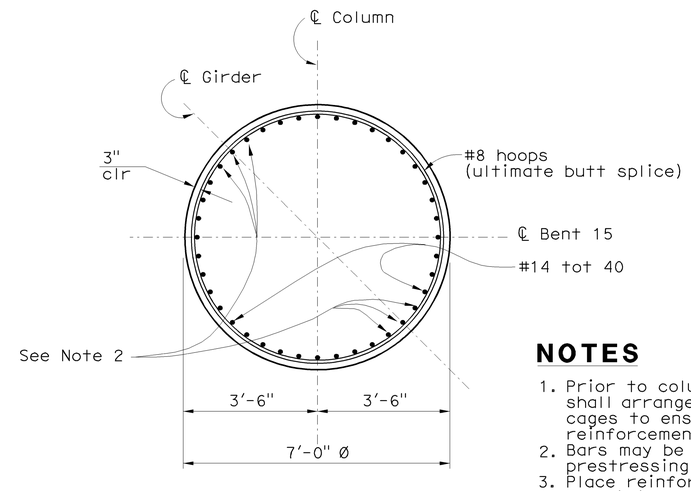

SECTION M-M
½" = 1'-0"

NOTES

1. Prior to column concrete placement, the Contractor shall arrange, rotate, and space column reinforcing cages to ensure subsequent bent cap bottom main reinforcement installation as shown.
2. Bars may be cut 1'-10" max at top to clear prestressing ducts.
3. Place reinforcement to clear prestressing ducts.
4. For limits of horiz cross tie and dowel reinforcement, see Elevation on "Bent 15 Layout" sheet.

LEGEND

Denotes bundled bars

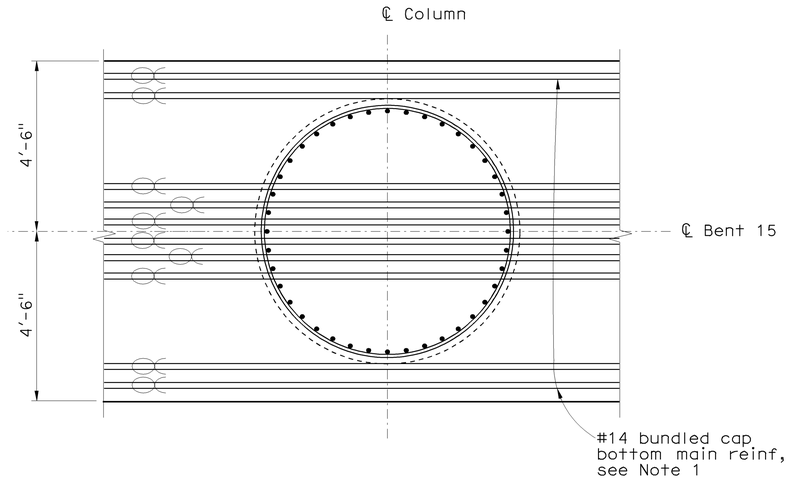

BENT CAP BOTTOM MAIN REINFORCEMENT LAYOUT
½" = 1'-0"

Sudhakar Vatti
DESIGN OVERSIGHT Sudhakar Vatti
8-10-09
SIGN OFF DATE

	BY	CHECKED
DESIGN	P. Morel	J. Holombo/S. Megally
DETAILS	N. Shu	J. Holombo
QUANTITIES	V. Nong	L. Khaleghi

PREPARED FOR THE STATE OF CALIFORNIA DEPARTMENT OF TRANSPORTATION

Alaedin Moubayed
PROJECT ENGINEER

BRIDGE NO. 55-1098E
POST MILE 24.02

405/605 HOV CONNECTOR
BENT 15 DETAILS NO. 1

DESIGN DETAIL SHEET (ENGLISH) (REV. 2/25/05)

ORIGINAL SCALE IN INCHES FOR REDUCED PLANS 0 1 2 3

CU 12235
EA 071631

DISREGARD PRINTS BEARING EARLIER REVISION DATES

REVISION DATES (PRELIMINARY STAGE ONLY) 02/18/08 06/02/08 09/29/08 10/15/08 03/26/09 04/06/09 07/27/09

SHEET 34 OF 87

FILE => 55-1098e-h-b15dt01.dgn

USERNAME => friehard DATE PLOTTED => 03-FEB-2010 TIME PLOTTED => 07:56

DIST	COUNTY	ROUTE	POST MILES TOTAL PROJECT	SHEET No	TOTAL SHEETS
12	Ora	22,405, 605	R0.3/R0.9, 22.3/24.0,3.0/R1.6	1606	1929

REGISTERED CIVIL ENGINEER 07-27-09 DATE

2-1-10
PLANS APPROVAL DATE

The State of California or its officers or agents shall not be responsible for the accuracy or completeness of electronic copies of this plan sheet.

REGISTERED PROFESSIONAL ENGINEER Paul A. Morel No. C 68491 Exp. 9-30-09 CIVIL STATE OF CALIFORNIA

OCTA
550 SOUTH MAIN STREET
ORANGE, CA 92863

PBS&J
625 THE CITY DRIVE SOUTH, SUITE 200
ORANGE, CA 92868

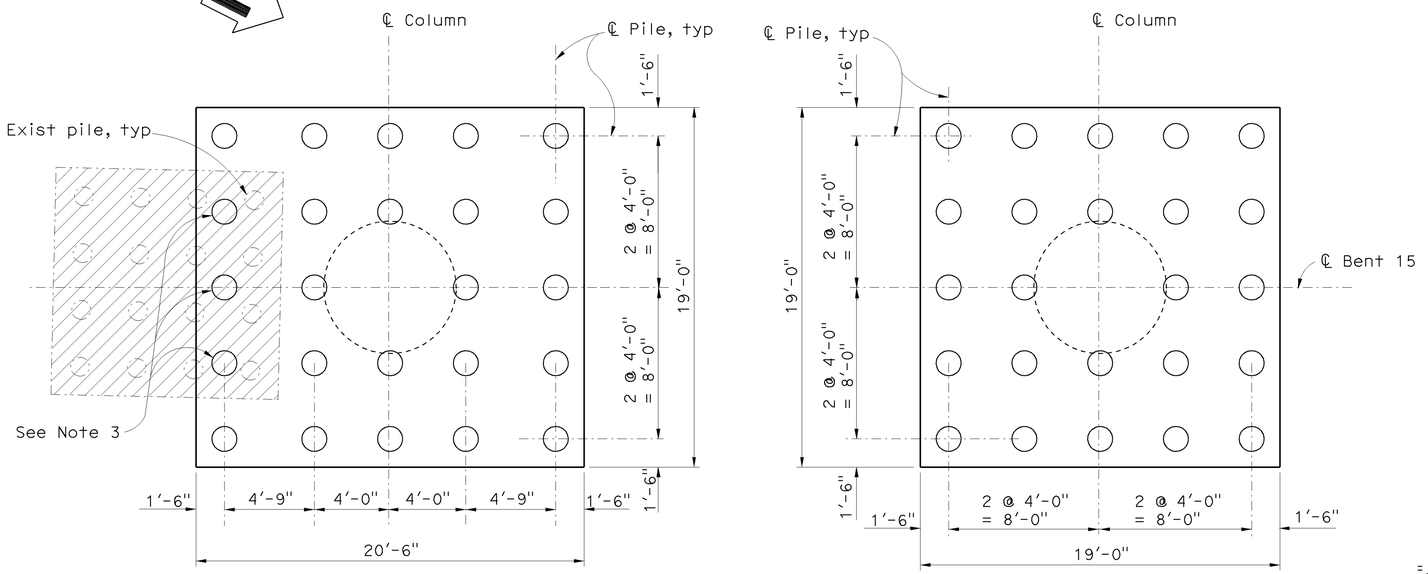

PILE LAYOUT

1/4" = 1'-0"

LEGEND

Denotes Class 200 Alt "W" pile

Denotes exist pile

Bridge Removal, see Note 5

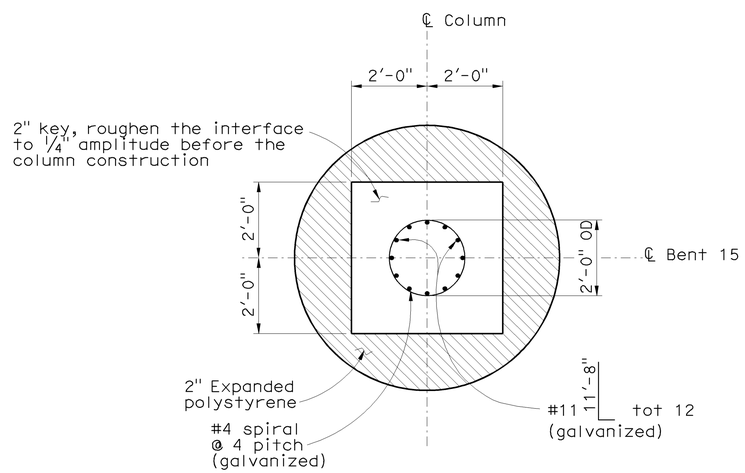

SECTION N-N

1/2" = 1'-0"

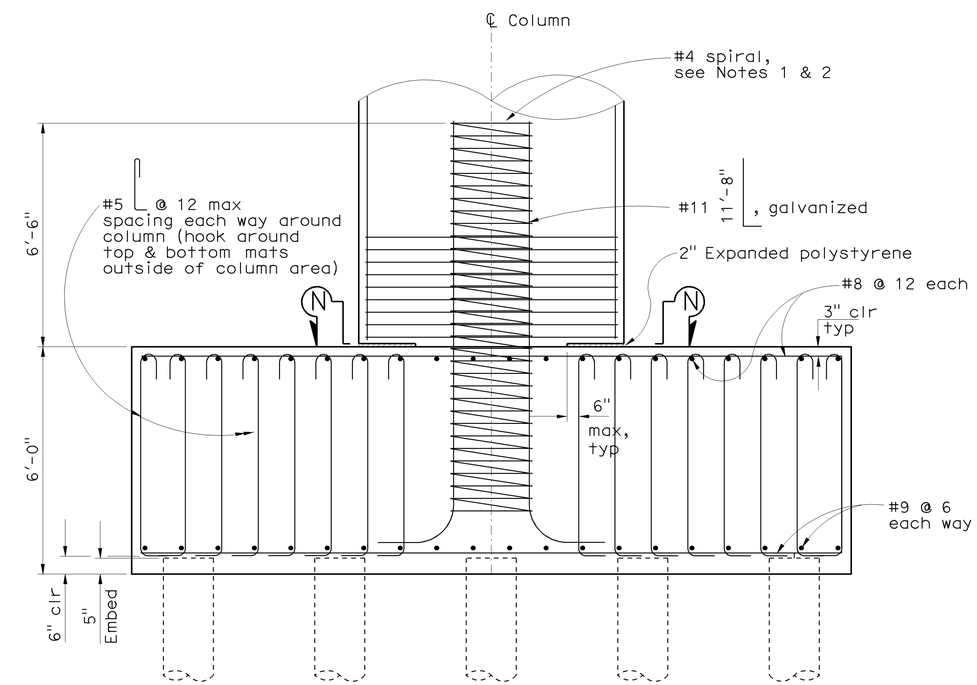

FOOTING ELEVATION

1/2" = 1'-0"

NOTES

1. Spiral may be discontinuous at the column/footing interface to allow the placing of footing reinforcement.
2. Spiral reinforcement at ends shall be terminated with a full horizontal turn around the rebar cage and a 2'-0" tail hooked around a longitudinal bar and passing through the core of the rebar cage.
3. Location of piles may be adjusted to avoid conflict with existing piles, as permitted by the Engineer.
4. Locations of existing piling and foundation are approximate.
5. For Bridge Removal, see "E22-N605/405 Separation (Replace)" plans

NOTE:
THE CONTRACTOR SHALL VERIFY ALL CONTROLLING FIELD DIMENSIONS BEFORE ORDERING OR FABRICATING ANY MATERIAL.

DESIGN OVERSIGHT Sudhakar Vatti
8-10-09
SIGN OFF DATE

	BY	CHECKED
DESIGN	P. Morel	J. Holombo/S. Megally
DETAILS	N. Shu	J. Holombo
QUANTITIES	V. Nong	L. Khaleghi

PREPARED FOR THE STATE OF CALIFORNIA DEPARTMENT OF TRANSPORTATION

Alaedin Moubayed
PROJECT ENGINEER

BRIDGE NO. 55-1098E
POST MILE 24.02

405/605 HOV CONNECTOR
BENT 15 DETAILS NO. 2

DESIGN DETAIL SHEET (ENGLISH) (REV. 2/25/05)

ORIGINAL SCALE IN INCHES FOR REDUCED PLANS 0 1 2 3

CU 12235
EA 071631

DISREGARD PRINTS BEARING EARLIER REVISION DATES

REVISION DATES (PRELIMINARY STAGE ONLY) 02/18/08 06/02/08 09/29/08 10/15/08 03/20/09 04/06/09 07/27/09

SHEET 35 OF 87

FILE => 55-1098e-h-b15dt02.dgn

USERNAME => rrlehard DATE PLOTTED => 03-FEB-2010 TIME PLOTTED => 07:56

DIST	COUNTY	ROUTE	POST MILES TOTAL PROJECT	SHEET No	TOTAL SHEETS
12	Ora	22,405, 605	R0.3/R0.9, 22.3/24.0,3.0/R1.6	1607	1929

REGISTERED CIVIL ENGINEER 07-27-09 DATE

2-1-10
PLANS APPROVAL DATE

REGISTERED PROFESSIONAL ENGINEER Paul A. Morel No. C 68491 Exp. 9-30-09 CIVIL STATE OF CALIFORNIA

The State of California or its officers or agents shall not be responsible for the accuracy or completeness of electronic copies of this plan sheet.

OCTA
550 SOUTH MAIN STREET
ORANGE, CA 92863

PBS&J
625 THE CITY DRIVE SOUTH, SUITE 200
ORANGE, CA 92868

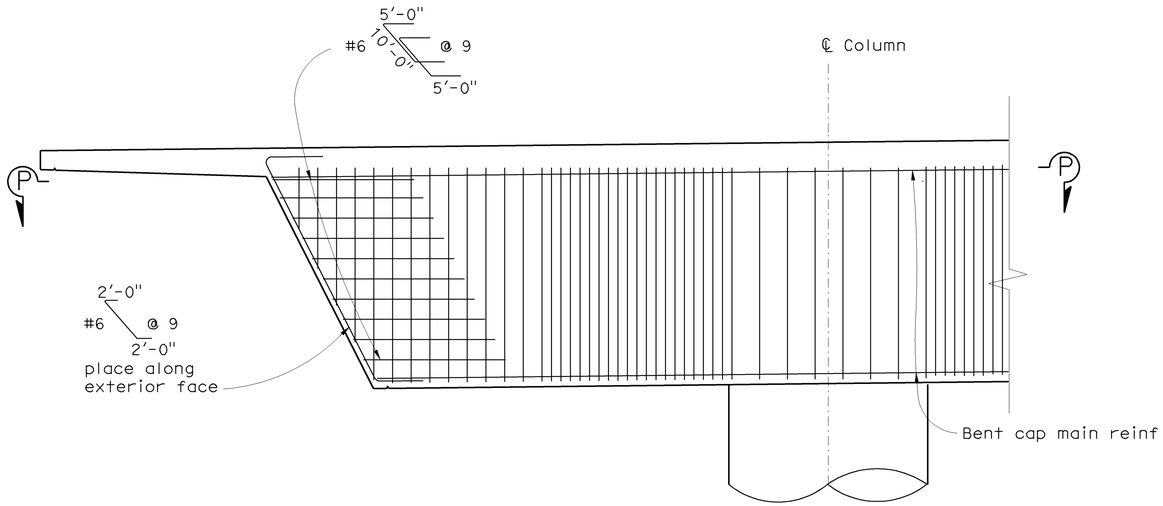

DETAIL A
3/8" = 1'-0"

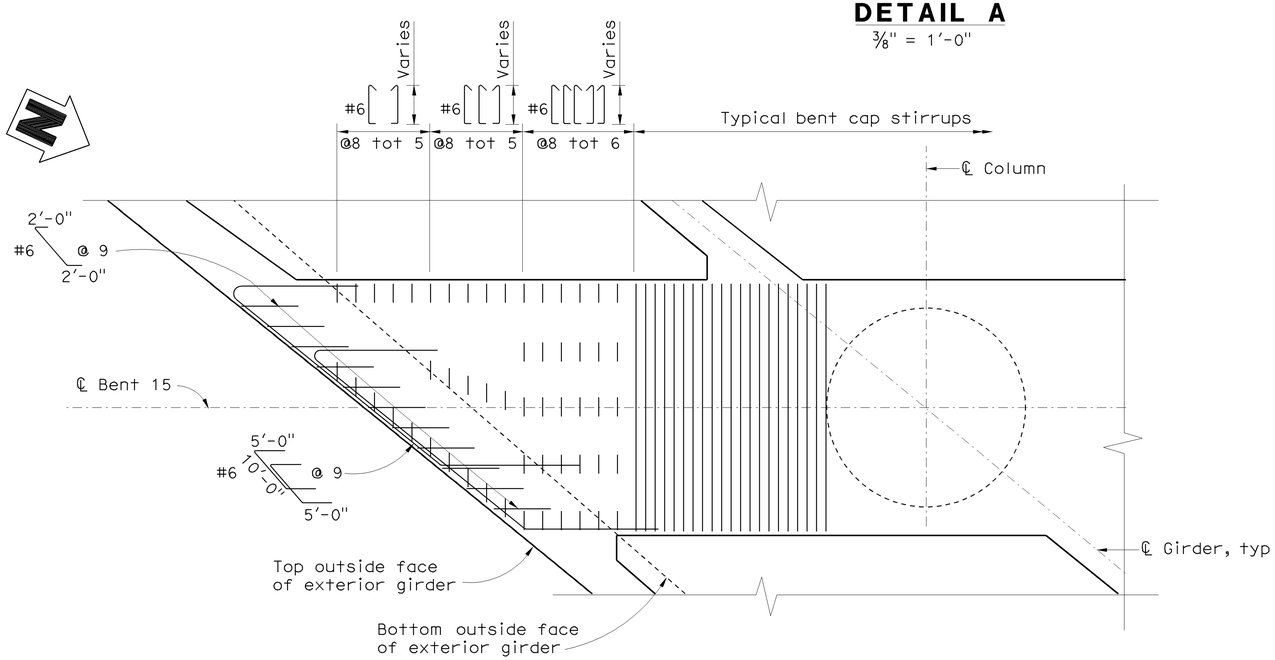

SECTION P-P
3/8" = 1'-0"

Sudhakar Vatti
DESIGN OVERSIGHT Sudhakar Vatti
8-10-09
SIGN OFF DATE

	BY	CHECKED
DESIGN	P. Morel	J. Holombo/S. Megally
DETAILS	N. Shu	J. Holombo
QUANTITIES	V. Nong	L. Khaleghi

PREPARED FOR THE STATE OF CALIFORNIA DEPARTMENT OF TRANSPORTATION

Alaedin Moubayed
PROJECT ENGINEER

BRIDGE NO. 55-1098E
POST MILE 24.02

405/605 HOV CONNECTOR
BENT 15 DETAILS NO. 3

DESIGN DETAIL SHEET (ENGLISH) (REV. 2/25/05)

ORIGINAL SCALE IN INCHES FOR REDUCED PLANS 0 1 2 3

CU 12235
EA 071631

DISREGARD PRINTS BEARING EARLIER REVISION DATES

REVISION DATES (PRELIMINARY STAGE ONLY) 02/14/08 06/02/08 09/29/08 10/14/08 03/20/09 04/06/09 07/27/09

SHEET 36 OF 87

FILE => 55-1098e-h-b15dt03.dgn

USERNAME => trlenard DATE PLOTTED => 03-FEB-2010 TIME PLOTTED => 07:56

DIST	COUNTY	ROUTE	POST MILES TOTAL PROJECT	SHEET No	TOTAL SHEETS
12	Ora	22,405, 605	R0.3/R0.9, 22.3/24.0,3.0/R1.6	1608	1929

REGISTERED CIVIL ENGINEER 07-27-09 DATE

2-1-10
PLANS APPROVAL DATE

REGISTERED PROFESSIONAL ENGINEER Paul A. Morel No. C 68491 Exp. 9-30-09 CIVIL STATE OF CALIFORNIA

The State of California or its officers or agents shall not be responsible for the accuracy or completeness of electronic copies of this plan sheet.

OCTA
550 SOUTH MAIN STREET
ORANGE, CA 92863

PBS&J
625 THE CITY DRIVE SOUTH, SUITE 200
ORANGE, CA 92868

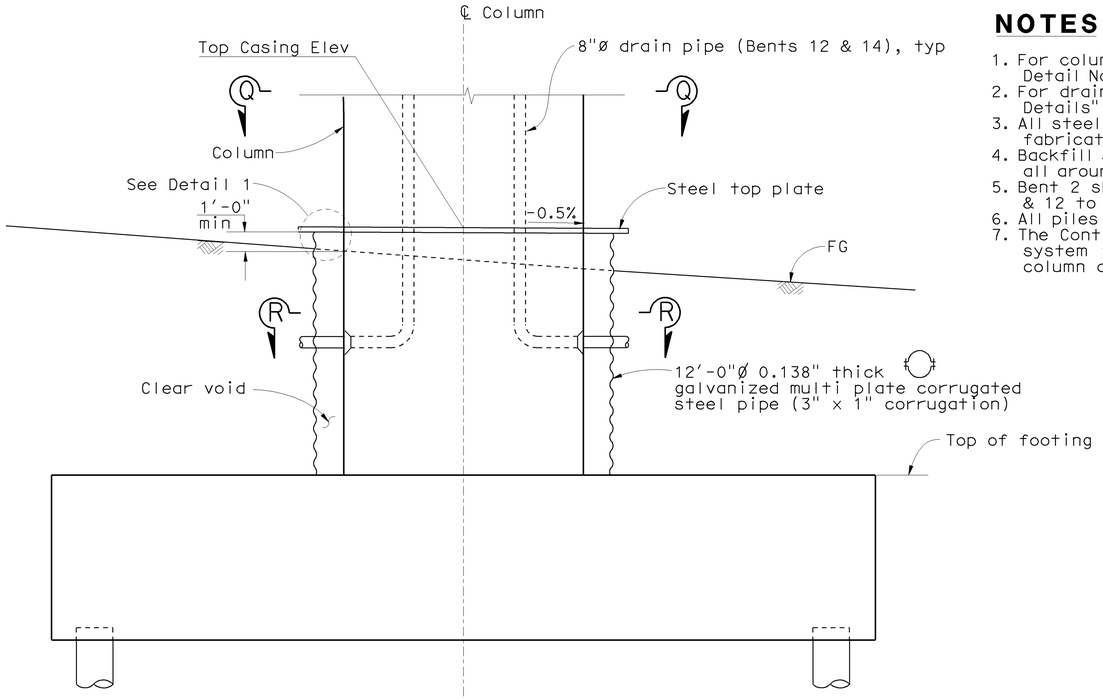

COLUMN ISOLATION CASING DETAIL
No Scale

NOTES

1. For column dimensions, see "Bent Detail No. 1" sheet.
2. For drain pipe details, see "Deck Drainage Details" sheet
3. All steel parts shall be galvanized after fabrication.
4. Backfill shall be brought up uniformly all around isolation casing.
5. Bent 2 shown, Bents 7 to 10 & 12 to 14 similar.
6. All piles not shown.
7. The Contractor shall provide a bracing system to maintain the concentricity of the column and the isolation casing

TOP CASING ELEVATION

Bent No.	Elev
2	20.50
7	39.00
8 West Column	46.00
8 East Column	43.00
9	47.00
10	40.00
12	43.00
13	45.00
14	30.50

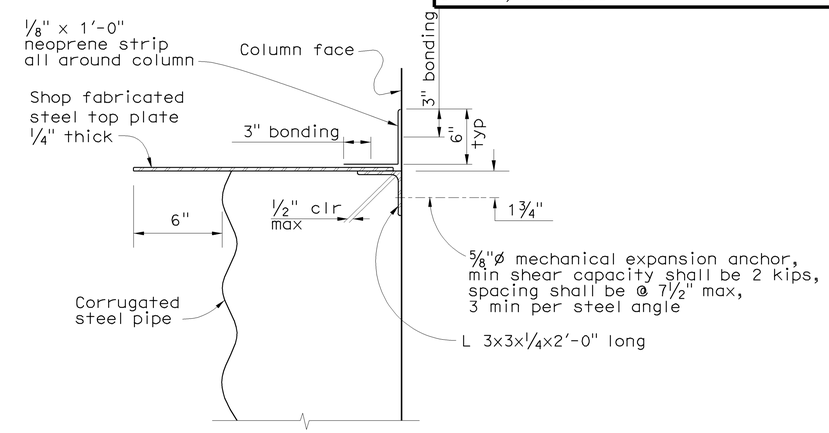

DETAIL 1
No Scale

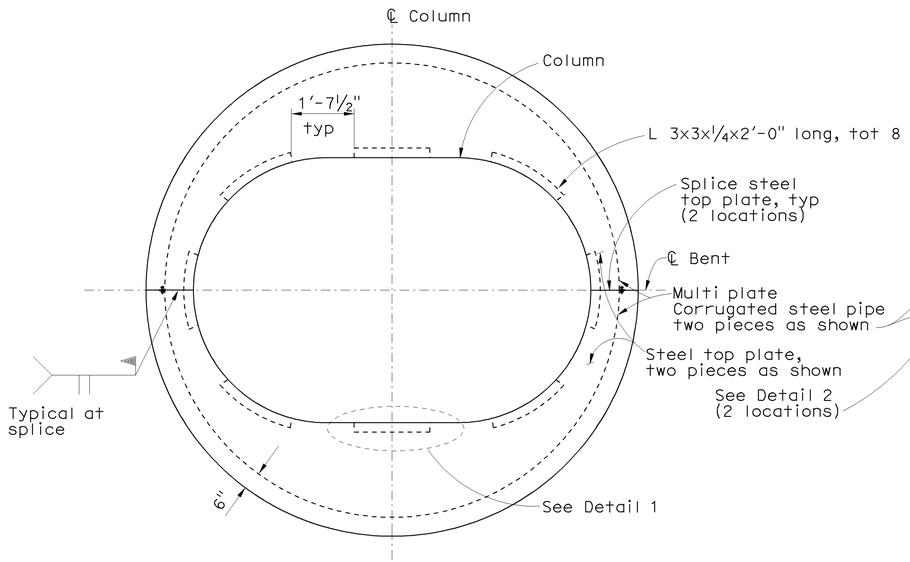

SECTION Q-Q
1/2" = 1'-0"

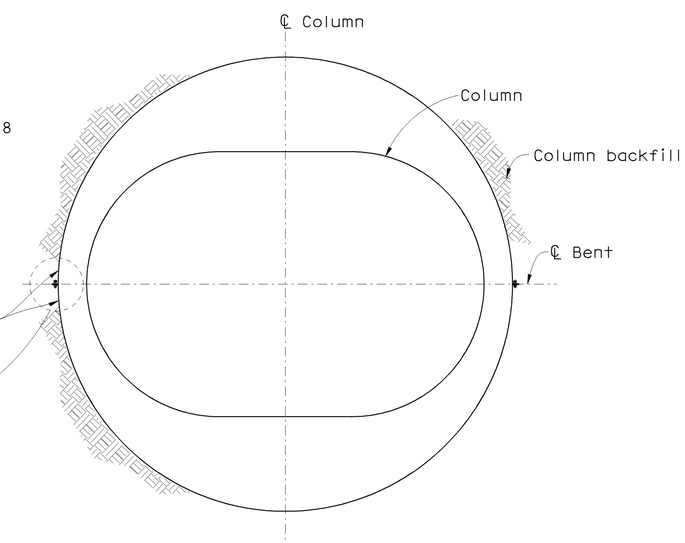

SECTION R-R
1/2" = 1'-0"

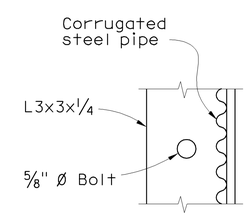

SECTION S-S
No Scale

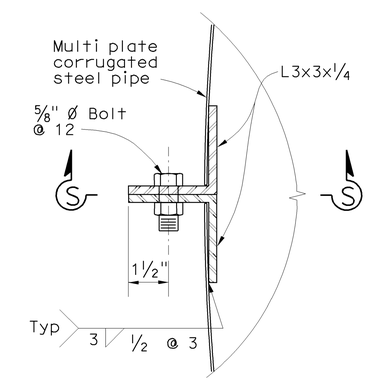

DETAIL 2
No Scale

Sudhakar Vatti
DESIGN OVERSIGHT Sudhakar Vatti
8-10-09
SIGN OFF DATE

	BY	CHECKED
DESIGN	P. Morel	J. Holombo/S. Megally
DETAILS	N. Shu	J. Holombo
QUANTITIES	V. Nong	L. Khaleghi

PREPARED FOR THE STATE OF CALIFORNIA DEPARTMENT OF TRANSPORTATION

Alaedin Moubayed
PROJECT ENGINEER

BRIDGE NO. 55-1098E
POST MILE 24.02

405/605 HOV CONNECTOR
COLUMN ISOLATION DETAILS

DESIGN DETAIL SHEET (ENGLISH) (REV. 2/25/05)

ORIGINAL SCALE IN INCHES FOR REDUCED PLANS 0 1 2 3

CU 12235
EA 071631

DISREGARD PRINTS BEARING EARLIER REVISION DATES

REVISION DATES (PRELIMINARY STAGE ONLY) 02/18/08 06/02/08 09/29/08 10/18/08 03/20/09 04/06/09 07/27/09

SHEET 37 OF 87

FILE => 55-1098e-i-ciso.dgn

USERNAME => trienard DATE PLOTTED => 03-FEB-2010 TIME PLOTTED => 07:56

DIST	COUNTY	ROUTE	POST MILES TOTAL PROJECT	SHEET No	TOTAL SHEETS
12	Ora	22,405, 605	R0.3/R0.9, 22.3/24.0,3.0/R1.6	1609	1929

REGISTERED CIVIL ENGINEER — DATE 07-27-09

2-1-10
PLANS APPROVAL DATE

REGISTERED PROFESSIONAL ENGINEER — Paul A. Morel — No. C 68491 — Exp. 9-30-09 — CIVIL — STATE OF CALIFORNIA

The State of California or its officers or agents shall not be responsible for the accuracy or completeness of electronic copies of this plan sheet.

OCTA
550 SOUTH MAIN STREET
ORANGE, CA 92863

PBS&J
625 THE CITY DRIVE SOUTH, SUITE 200
ORANGE, CA 92868

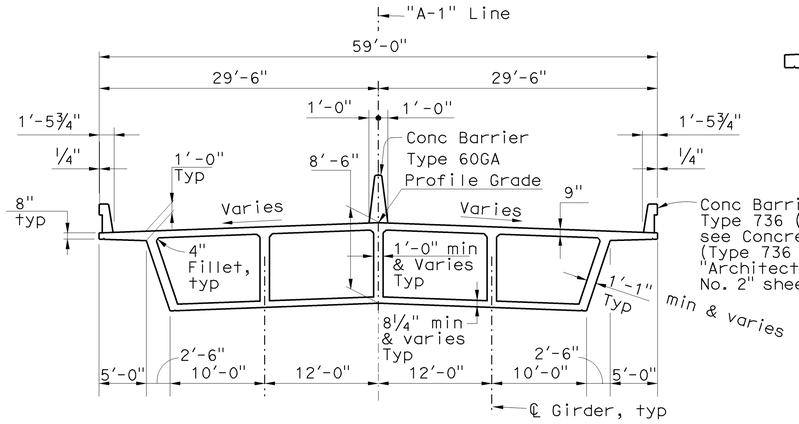

TYPICAL SECTION
⅛" = 1'-0"

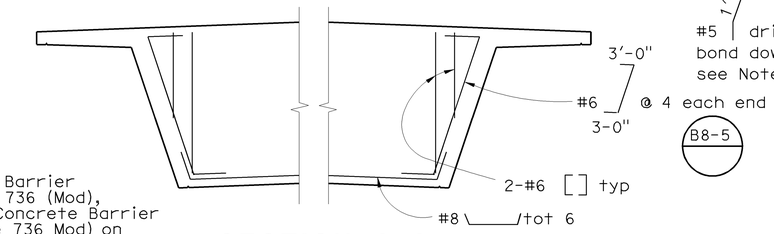

SECTION A-A
¼" = 1'-0"

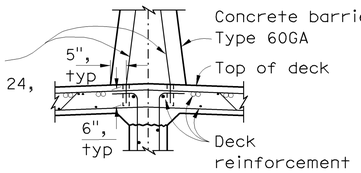

CONCRETE BARRIER TYPE 60GA ANCHORAGE INTO DECK (OPTIONAL)
¼" = 1'-0"

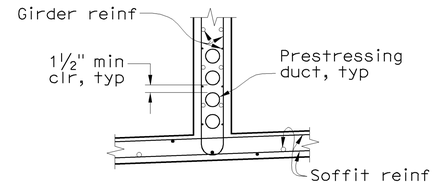

PART GIRDER SECTION
Interior girder shown, exterior girder similar
No Scale

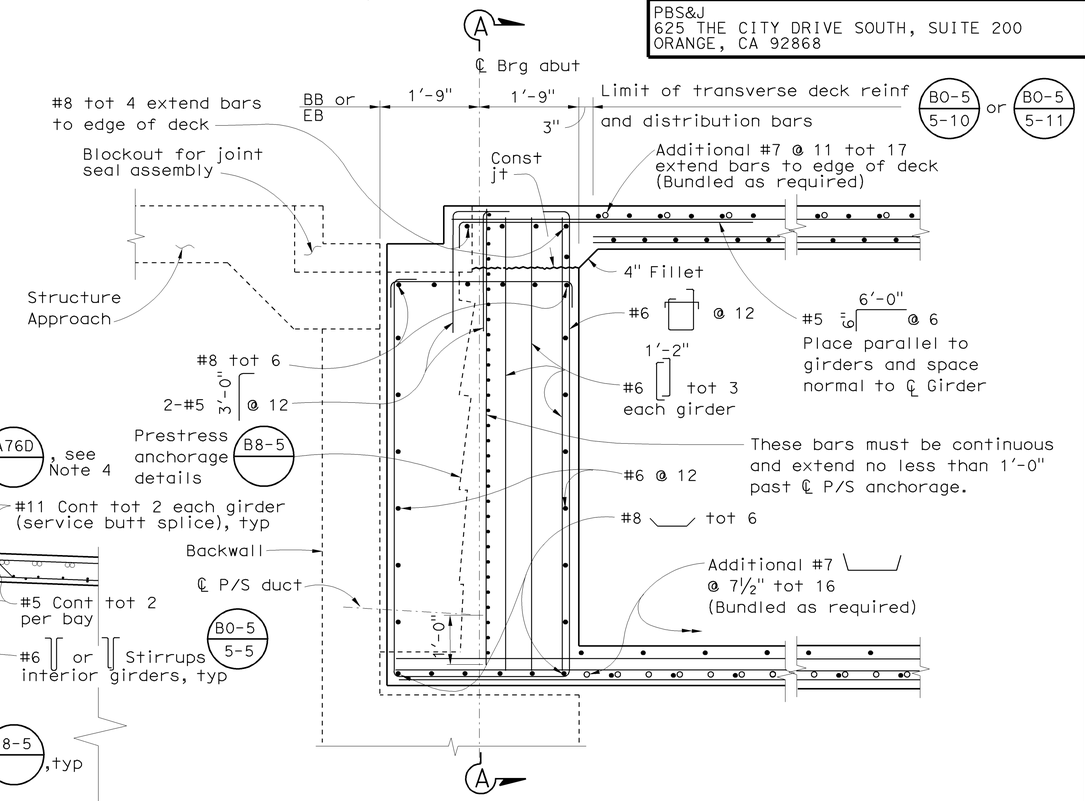

END DIAPHRAGM DETAIL
¾" = 1'-0"

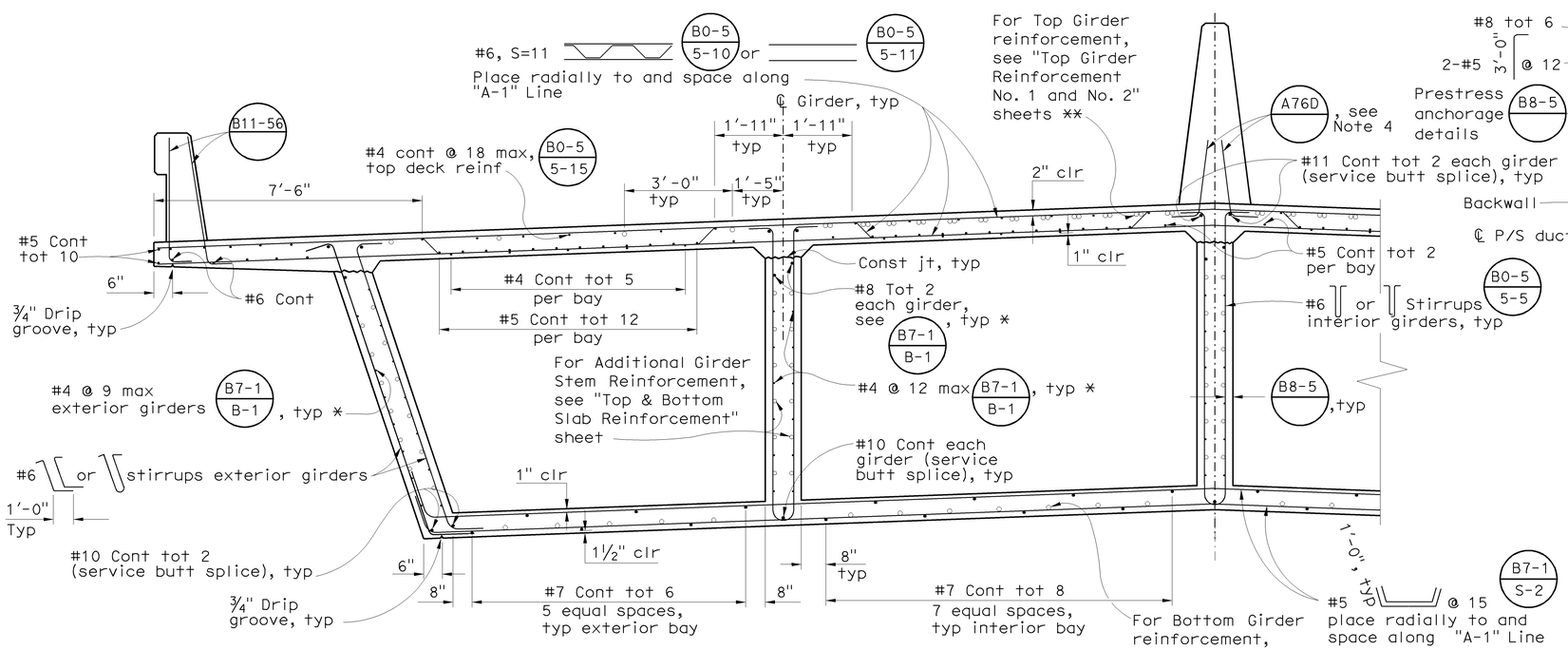

PART TYPICAL SECTION B7-1 B8-5 B0-5
½" = 1'-0"

* No lap splicing allowed within 10'-0" from ℄ Bent
** Space reinforcement to clear deck drains
*** Space reinforcement to clear soffit access openings

NOTES

1. Abut 1 shown, Abut 16 similar.
2. Dimensions are measured normal to ℄ Brg Abut.
3. Reinforcing bars may be adjusted as necessary to accommodate installation of the joint seal assembly blockout as directed by the Engineer.
4. The Contractor has the option to use the anchorage details shown on "Concrete Barrier Type 60GA Anchorage into Deck (Optional)"
5. Dowel spacing may be adjusted as necessary to clear deck reinforcement.

LEGEND

° Denotes additional longitudinal reinforcement

Sudhakar Vatti
DESIGN OVERSIGHT — Sudhakar Vatti
8-10-09
SIGN OFF DATE

	BY	CHECKED
DESIGN	P. Morel	J. Holombo/S. Megally
DETAILS	N. Shu	J. Holombo
QUANTITIES	V. Nong	L. Khaleghi

PREPARED FOR THE STATE OF CALIFORNIA DEPARTMENT OF TRANSPORTATION

Alaedin Moubayed
PROJECT ENGINEER

BRIDGE NO. 55-1098E
POST MILE 24.02

405/605 HOV CONNECTOR
TYPICAL SECTION

DESIGN DETAIL SHEET (ENGLISH) (REV. 2/25/05)

ORIGINAL SCALE IN INCHES FOR REDUCED PLANS 0 1 2 3

CU 12235
EA 071631

DISREGARD PRINTS BEARING EARLIER REVISION DATES

REVISION DATES (PRELIMINARY STAGE ONLY) 02/18/08 06/02/08 09/29/08 10/13/08 03/26/09 04/06/09 07/27/09

SHEET 38 OF 87

FILE => 55-1098e-k-ts01.dgn

USERNAME => friehard DATE PLOTTED => 03-FEB-2010 TIME PLOTTED => 07:56

DIST	COUNTY	ROUTE	POST MILES TOTAL PROJECT	SHEET No	TOTAL SHEETS
12	Ora	22,405, 605	R0.3/R0.9, 22.3/24.0,3.0/R1.6	1610	1929

REGISTERED CIVIL ENGINEER 07-27-09 DATE

2-1-10
PLANS APPROVAL DATE

The State of California or its officers or agents shall not be responsible for the accuracy or completeness of electronic copies of this plan sheet.

REGISTERED PROFESSIONAL ENGINEER Paul A. Morel No. C 68491 Exp. 9-30-09 CIVIL STATE OF CALIFORNIA

OCTA
550 SOUTH MAIN STREET
ORANGE, CA 92863

PBS&J
625 THE CITY DRIVE SOUTH, SUITE 200
ORANGE, CA 92868

NOTE

Girder flare length is measured along ℄ of each girder

LEGEND

(A) Girder designation

Indicates girder stem width in inch, see (B7-1 / S-3)

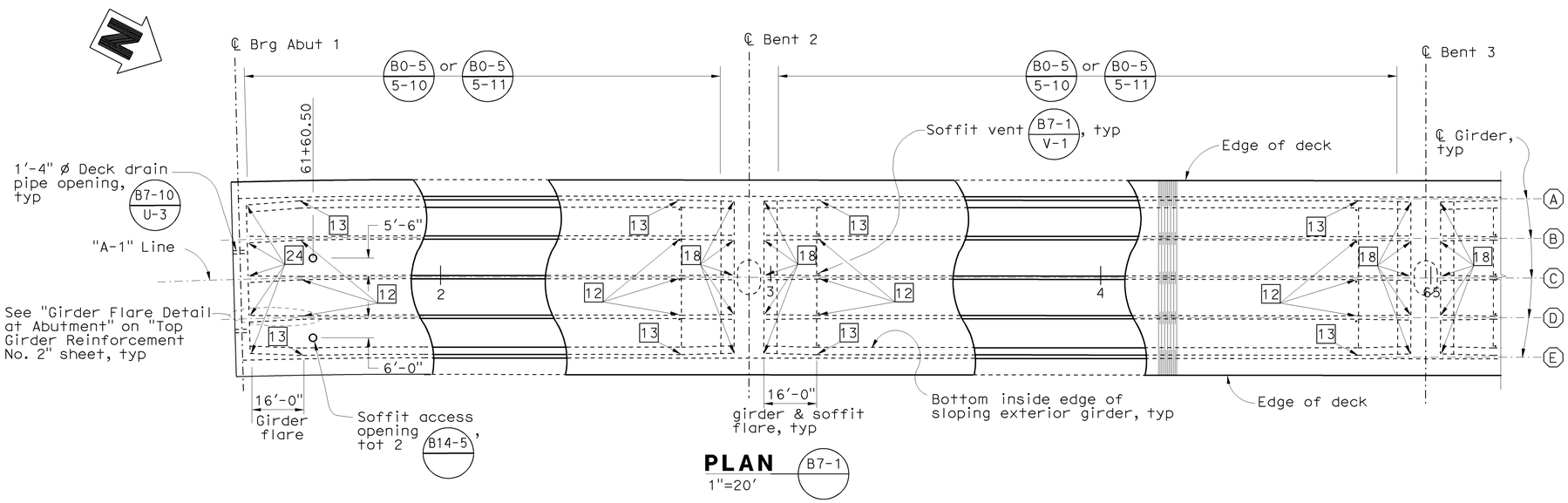

PLAN (B7-1)

1"=20'

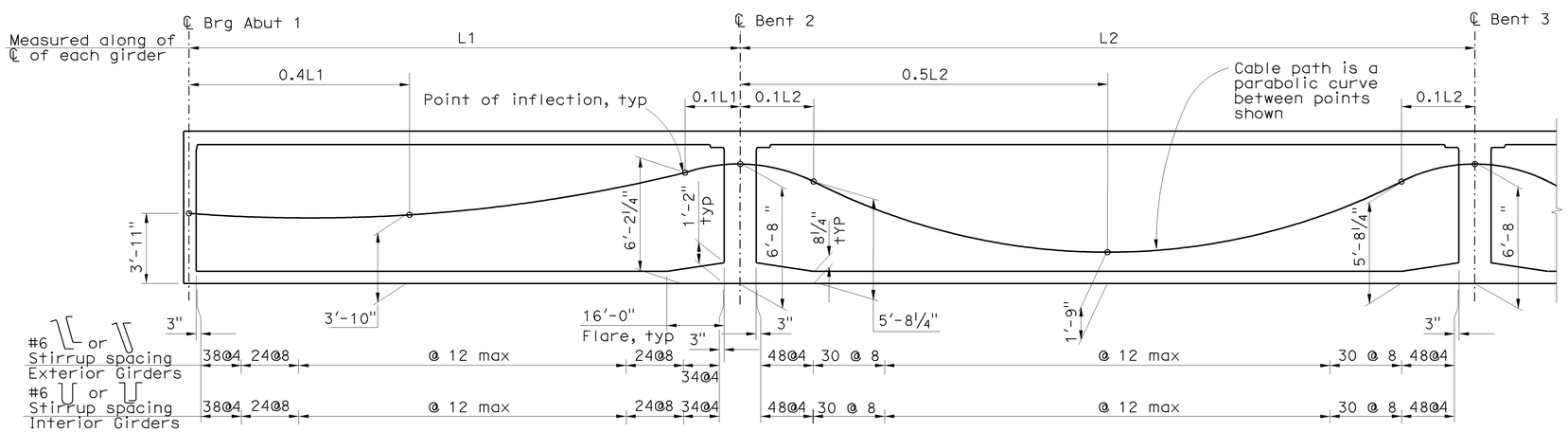

LONGITUDINAL SECTION (B8-5)

No Scale

FRAME 1 PRESTRESSING NOTES

270 Ksi Low Relaxation Strand:
Pjack 19,700 Kips
Anchor Set 3/8 inch
Total Number of Girders = 5
Distribution of prestress force (Pjack) between girders shall not exceed the ratio of 3:2
Maximum final force variation between girders shall not exceed 725 Kips
Concrete: f'_c=5,000 psi @ 28 days
f'_{ci}=4,000 psi @ time of stressing
Contractor shall submit elongation calculations based on initial stress at ⌀ = 0.802 times jacking stress
Stressing shall be performed from both ends.
Design is based on friction curvature
Coefficient μ= 0.20 and friction
Wobble coefficient k= 0.0002/ft

Sudhakar Vatti
DESIGN OVERSIGHT Sudhakar Vatti
8-10-09
SIGN OFF DATE

	BY	CHECKED
DESIGN	P. Morel	J. Holombo/S. Megally
DETAILS	N. Shu	J. Holombo
QUANTITIES	V. Nong	L. Khaleghi

PREPARED FOR THE STATE OF CALIFORNIA DEPARTMENT OF TRANSPORTATION

Alaedin Moubayed
PROJECT ENGINEER

BRIDGE NO. 55-1098E
POST MILE 24.02

405/605 HOV CONNECTOR
GIRDER LAYOUT NO. 1

DESIGN DETAIL SHEET (ENGLISH) (REV. 2/25/05)

ORIGINAL SCALE IN INCHES FOR REDUCED PLANS 0 1 2 3

CU 12235
EA 071631

DISREGARD PRINTS BEARING EARLIER REVISION DATES

REVISION DATES (PRELIMINARY STAGE ONLY) 02/14/08 06/09/08 09/29/08 10/14/08 03/20/09 04/09/09 07/27/09

SHEET 39 OF 87

FILE => 55-1098e-1-glo01.dgn

USERNAME => trlenard DATE PLOTTED => 03-FEB-2010 TIME PLOTTED => 07:56

DIST	COUNTY	ROUTE	POST MILES TOTAL PROJECT	SHEET No	TOTAL SHEETS
12	Ora	22,405, 605	R0.3/R0.9, 22.3/24.0,3.0/R1.6	1611	1929

REGISTERED CIVIL ENGINEER 07-27-09 DATE

2-1-10
PLANS APPROVAL DATE

REGISTERED PROFESSIONAL ENGINEER Paul A. Morel No. C 68491 Exp. 9-30-09 CIVIL STATE OF CALIFORNIA

The State of California or its officers or agents shall not be responsible for the accuracy or completeness of electronic copies of this plan sheet.

OCTA
550 SOUTH MAIN STREET
ORANGE, CA 92863

PBS&J
625 THE CITY DRIVE SOUTH, SUITE 200
ORANGE, CA 92868

NOTE

Girder flare length is measured along ℄ of each girder

LEGEND

- (A) Girder designation
- Indicates girder stem width in inch, see (B7-1 / S-3)
- Indicates theoretical point of no movement for stressing

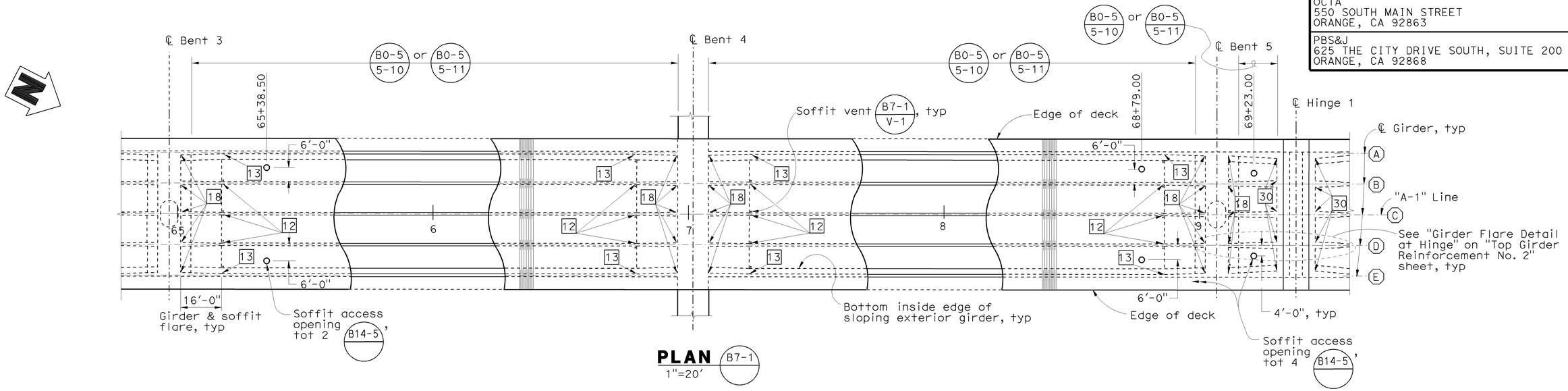

PLAN (B7-1)
1"=20'

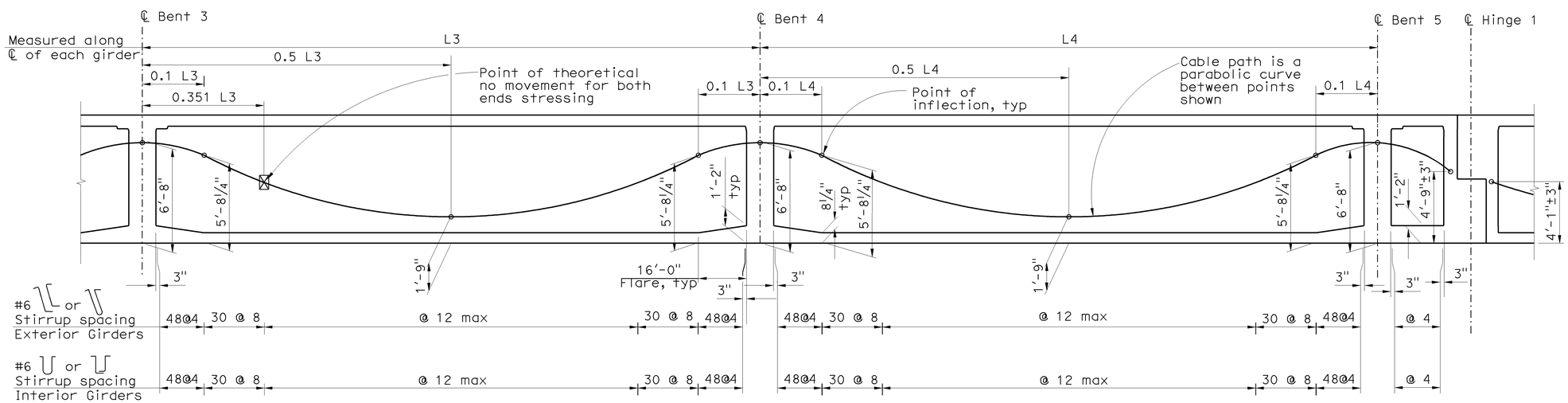

LONGITUDINAL SECTION (B8-5)
No Scale

DESIGN	BY P. Morel	CHECKED J. Holombo/S. Megally	PREPARED FOR THE STATE OF CALIFORNIA DEPARTMENT OF TRANSPORTATION
DETAILS	BY N. Shu	CHECKED J. Holombo	
QUANTITIES	BY V. Nong	CHECKED L. Khaleghi	

Sudhakar Vatti
DESIGN OVERSIGHT Sudhakar Vatti
8-10-09
SIGN OFF DATE

Alaedin Moubayed
PROJECT ENGINEER

BRIDGE NO. 55-1098E
POST MILE 24.02

405/605 HOV CONNECTOR
GIRDER LAYOUT NO. 2

DESIGN DETAIL SHEET (ENGLISH) (REV. 2/25/05)

ORIGINAL SCALE IN INCHES FOR REDUCED PLANS 0 1 2 3

CU 12235
EA 071631

DISREGARD PRINTS BEARING EARLIER REVISION DATES

REVISION DATES (PRELIMINARY STAGE ONLY) 02/15/08 06/02/08 09/29/08 10/15/08 03/26/09 04/06/09 07/27/09

SHEET 40 OF 87

FILE => 55-1098e-l-glo02.dgn

USERNAME => trrenard DATE PLOTTED => 03-FEB-2010 TIME PLOTTED => 07:56

DIST	COUNTY	ROUTE	POST MILES TOTAL PROJECT	SHEET No	TOTAL SHEETS
12	Ora	22,405, 605	R0.3/R0.9, 22.3/24.0,3.0/R1.6	1612	1929

REGISTERED CIVIL ENGINEER — DATE 07-27-09

2-1-10
PLANS APPROVAL DATE

REGISTERED PROFESSIONAL ENGINEER — Paul A. Morel No. C 68491 Exp. 9-30-09 CIVIL — STATE OF CALIFORNIA

The State of California or its officers or agents shall not be responsible for the accuracy or completeness of electronic copies of this plan sheet.

OCTA
550 SOUTH MAIN STREET
ORANGE, CA 92863

PBS&J
625 THE CITY DRIVE SOUTH, SUITE 200
ORANGE, CA 92868

NOTE

Girder flare length is measured along ℄ of each girder

LEGEND

(A) Girder designation

☐ Indicates girder stem width in inch, see (B7-1 / S-3)

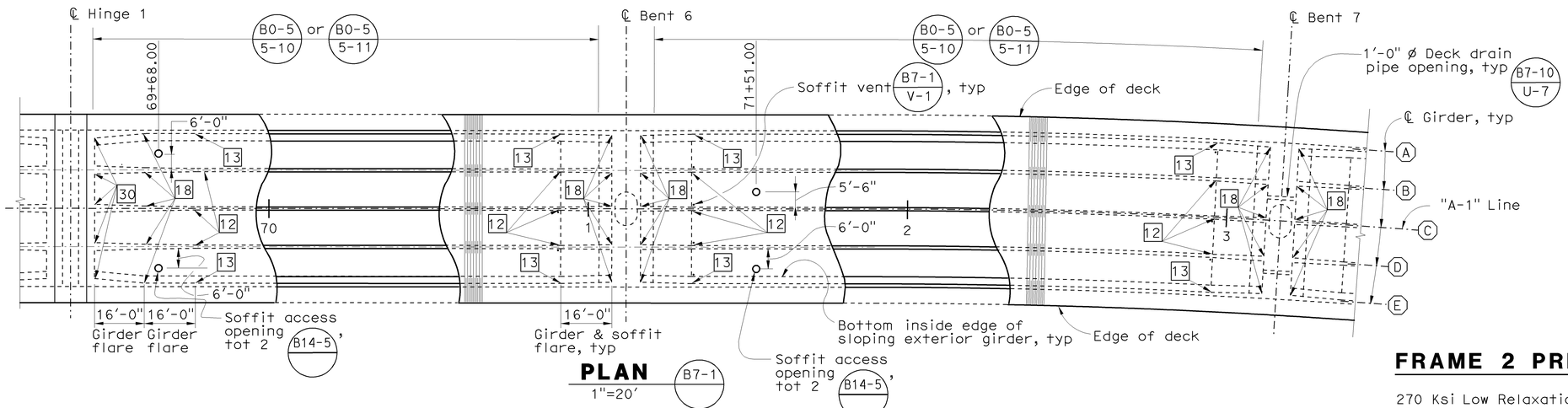

PLAN (B7-1) 1"=20'

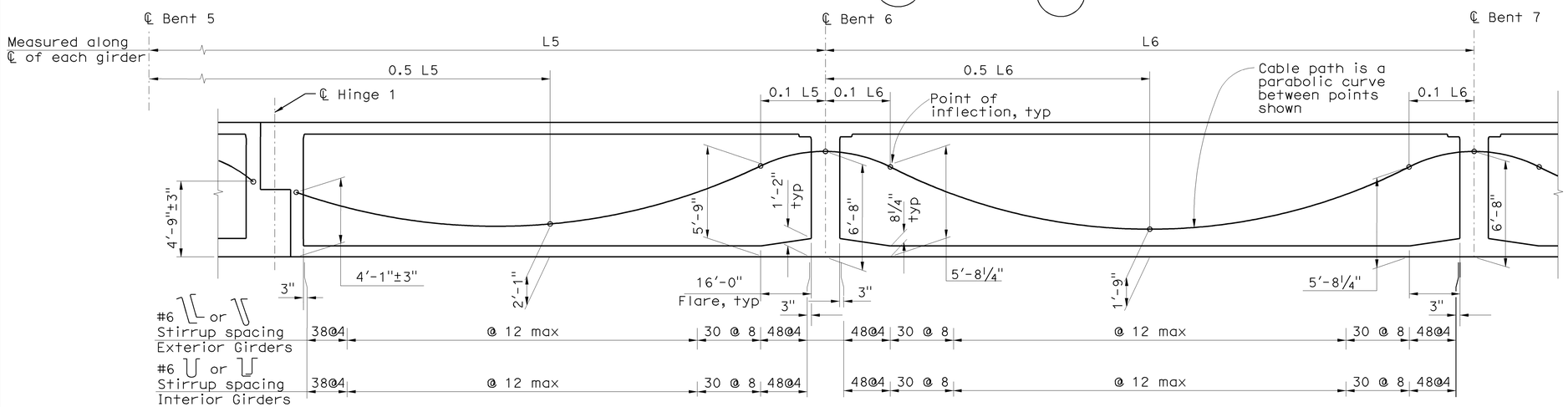

LONGITUDINAL SECTION (B8-5)
No Scale

FRAME 2 PRESTRESSING NOTES

270 Ksi Low Relaxation Strand:
Pjack 20,000 Kips
Anchor Set 3/8 inch
Total Number of Girders = 5
Distribution of prestress force (Pjack) between girders shall not exceed the ratio of 3:2
Maximum final force variation between girders shall not exceed 725 Kips
Concrete: f'_c=5,000 psi @ 28 days
f'_{ci}=4,000 psi @ time of stressing
Contractor shall submit elongation calculations based on initial stress at ⊠ = 0.791 times jacking stress
Stressing shall be performed from both ends.
Design is based on friction curvature
Coefficient μ= 0.20 and friction
Wobble coefficient k= 0.0002/ft

Sudhakar Vatti
DESIGN OVERSIGHT Sudhakar Vatti
8-10-09
SIGN OFF DATE

DESIGN DETAIL SHEET (ENGLISH) (REV. 2/25/05)

	BY	CHECKED
DESIGN	P. Morel	J. Holombo/S. Megally
DETAILS	N. Shu	J. Holombo
QUANTITIES	V. Nong	L. Khaleghi

ORIGINAL SCALE IN INCHES FOR REDUCED PLANS 0 1 2 3

PREPARED FOR THE STATE OF CALIFORNIA DEPARTMENT OF TRANSPORTATION

Alaedin Moubayed
PROJECT ENGINEER

CU 12235
EA 071631

BRIDGE NO. 55-1098E
POST MILE 24.02

405/605 HOV CONNECTOR
GIRDER LAYOUT NO. 3

DISREGARD PRINTS BEARING EARLIER REVISION DATES
REVISION DATES (PRELIMINARY STAGE ONLY) 02/18/08 06/02/08 09/29/08 10/18/08 03/20/09 04/06/09 07/27/09

SHEET 41 OF 87

FILE => 55-1098e-1-glo03.dgn

USERNAME => trienard DATE PLOTTED => 03-FEB-2010 TIME PLOTTED => 07:57

DIST	COUNTY	ROUTE	POST MILES TOTAL PROJECT	SHEET No	TOTAL SHEETS
12	Ora	22,405, 605	R0.3/R0.9, 22.3/24.0,3.0/R1.6	1613	1929

REGISTERED CIVIL ENGINEER — DATE 07-27-09

2-1-10
PLANS APPROVAL DATE

REGISTERED PROFESSIONAL ENGINEER — Paul A. Morel — No. C 68491 — Exp. 9-30-09 — CIVIL — STATE OF CALIFORNIA

The State of California or its officers or agents shall not be responsible for the accuracy or completeness of electronic copies of this plan sheet.

OCTA
550 SOUTH MAIN STREET
ORANGE, CA 92863

PBS&J
625 THE CITY DRIVE SOUTH, SUITE 200
ORANGE, CA 92868

NOTE

Girder flare length is measured along ℄ of each girder

LEGEND

- (A) Girder designation
- Indicates girder stem width in inch, see (B7-1 / S-3)
- Indicates theoretical point of no movement for stressing

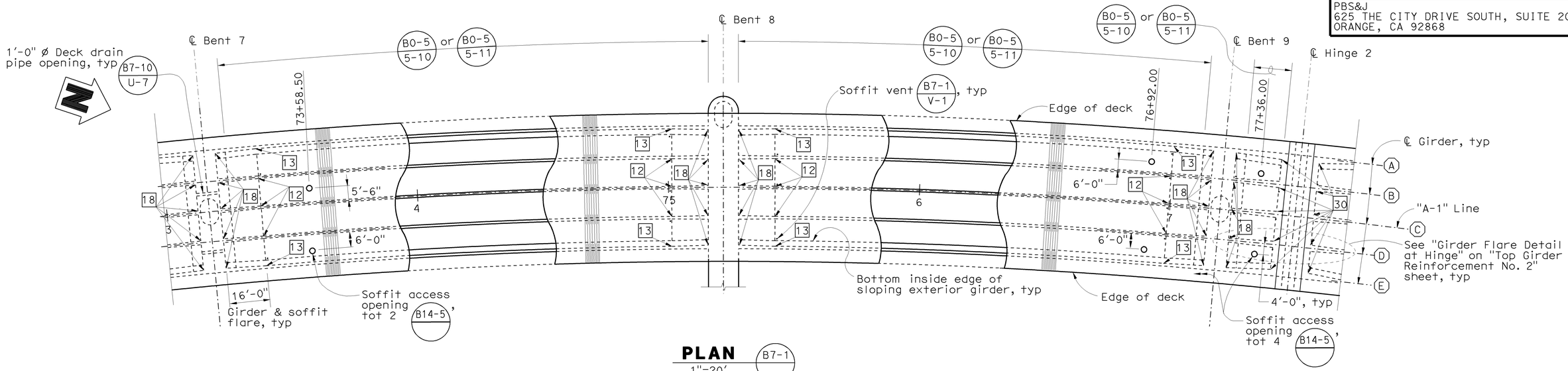

PLAN (B7-1)
1"=20'

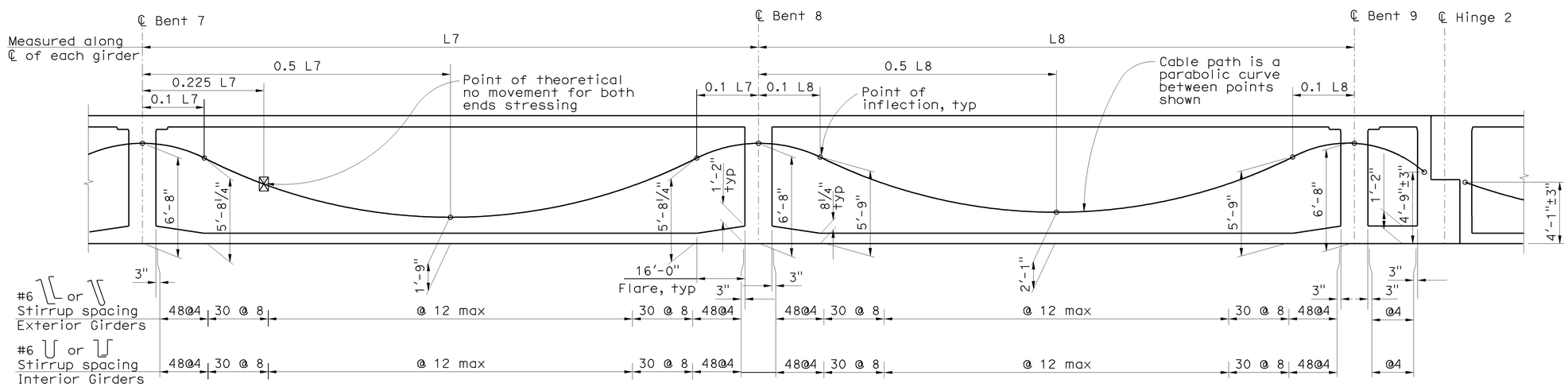

LONGITUDINAL SECTION (B8-5)
No Scale

Sudhakar Vatti
DESIGN OVERSIGHT — Sudhakar Vatti
8-10-09
SIGN OFF DATE

	BY	CHECKED
DESIGN	P. Morel	J. Holombo/S. Megally
DETAILS	N. Shu	J. Holombo
QUANTITIES	V. Nong	L. Khaleghi

PREPARED FOR THE STATE OF CALIFORNIA DEPARTMENT OF TRANSPORTATION

Alaedin Moubayed
PROJECT ENGINEER

BRIDGE NO. 55-1098E
POST MILE 24.02

405/605 HOV CONNECTOR
GIRDER LAYOUT NO. 4

DESIGN DETAIL SHEET (ENGLISH) (REV. 2/25/05)

ORIGINAL SCALE IN INCHES FOR REDUCED PLANS 0 1 2 3

CU 12235
EA 071631

DISREGARD PRINTS BEARING EARLIER REVISION DATES

REVISION DATES (PRELIMINARY STAGE ONLY): 02/18/08 06/02/08 09/24/08 10/13/08 03/20/09 04/06/09 07/27/09

SHEET 42 OF 87

FILE => 55-1098e-1-glo04.dgn

USERNAME => friehard DATE PLOTTED => 03-FEB-2010 TIME PLOTTED => 07:57

DIST	COUNTY	ROUTE	POST MILES TOTAL PROJECT	SHEET No	TOTAL SHEETS
12	Ora	22,405, 605	R0.3/R0.9, 22.3/24.0,3.0/R1.6	1614	1929

REGISTERED CIVIL ENGINEER 07-27-09 DATE

2-1-10
PLANS APPROVAL DATE

Registered Professional Engineer — Paul A. Morel, No. C 68491, Exp. 9-30-09, CIVIL, State of California

The State of California or its officers or agents shall not be responsible for the accuracy or completeness of electronic copies of this plan sheet.

OCTA
550 SOUTH MAIN STREET
ORANGE, CA 92863

PBS&J
625 THE CITY DRIVE SOUTH, SUITE 200
ORANGE, CA 92868

NOTE

Girder flare length is measured along ℄ of each girder

LEGEND

(A) Girder designation

Indicates girder stem width in inch, see (B7-1 / S-3)

⊠ Indicates theoretical point of no movement for stressing

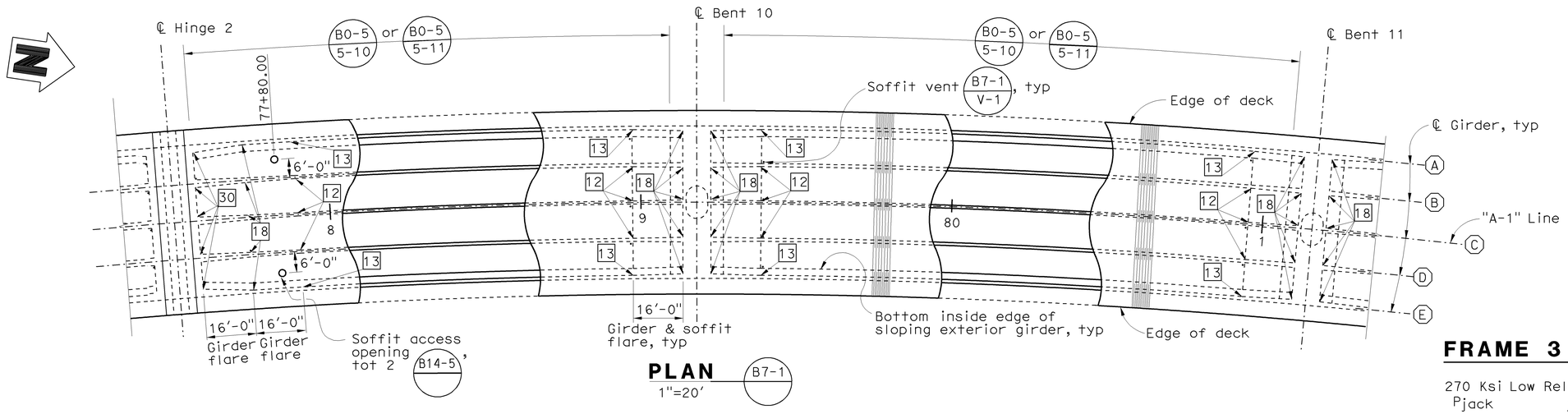

PLAN (B7-1)
1"=20'

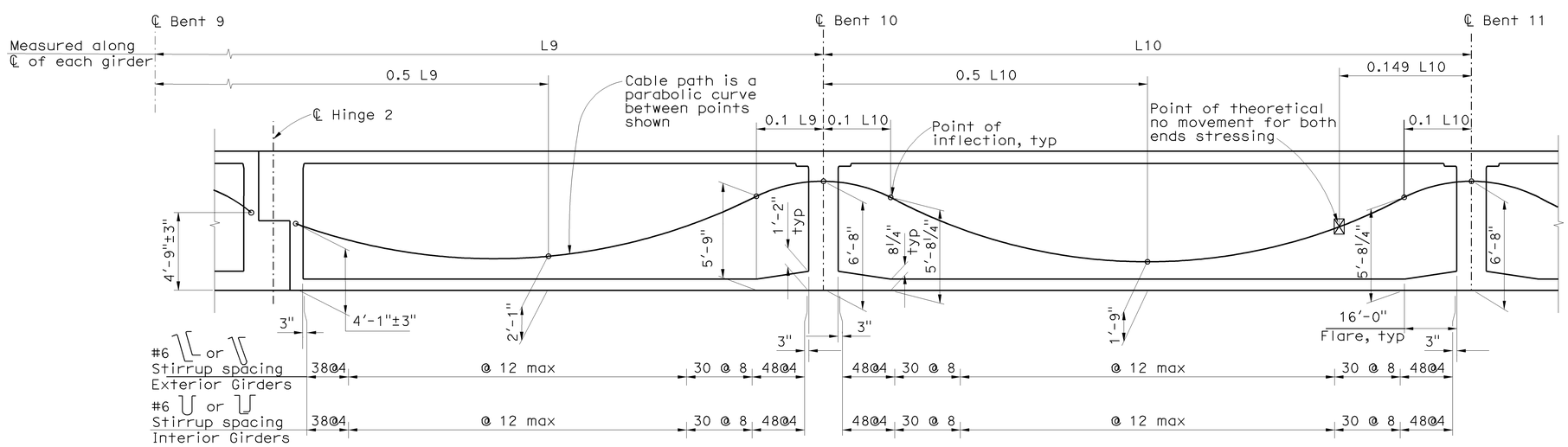

LONGITUDINAL SECTION (B8-5)
No Scale

FRAME 3 PRESTRESSING NOTES

270 Ksi Low Relaxation Strand:
Pjack 18,950 Kips
Anchor Set 3/8 inch
Total Number of Girders = 5
Distribution of prestress force (Pjack) between girders shall not exceed the ratio of 3:2
Maximum final force variation between girders shall not exceed 725 Kips
Concrete: f'_c=5,000 psi @ 28 days
f'_{ci}=4,000 psi @ time of stressing
Contractor shall submit elongation calculations based on initial stress at ⊠ = 0.861 times jacking stress
Stressing shall be performed from both ends.
Design is based on friction curvature
Coefficient μ= 0.15 and friction
Wobble coefficient k= 0.0002/ft

Sudhakar Vatti
DESIGN OVERSIGHT Sudhakar Vatti
8-10-09
SIGN OFF DATE

	BY	CHECKED
DESIGN	P. Morel	J. Holombo/S. Megally
DETAILS	N. Shu	J. Holombo
QUANTITIES	V. Nong	L. Khaleghi

PREPARED FOR THE STATE OF CALIFORNIA DEPARTMENT OF TRANSPORTATION

Alaedin Moubayed
PROJECT ENGINEER

BRIDGE NO. 55-1098E
POST MILE 24.02

405/605 HOV CONNECTOR
GIRDER LAYOUT NO. 5

DESIGN DETAIL SHEET (ENGLISH) (REV. 2/25/05)

ORIGINAL SCALE IN INCHES FOR REDUCED PLANS 0 1 2 3

CU 12235
EA 071631

DISREGARD PRINTS BEARING EARLIER REVISION DATES — REVISION DATES (PRELIMINARY STAGE ONLY) 02/18/08 06/02/08 09/29/08 10/15/08 03/20/09 04/06/09 07/27/09

SHEET 43 OF 87

FILE => 55-1098e-1-glo05.dgn

USERNAME => friehard DATE PLOTTED => 03-FEB-2010 TIME PLOTTED => 07:57

DIST	COUNTY	ROUTE	POST MILES TOTAL PROJECT	SHEET No	TOTAL SHEETS
12	Ora	22,405, 605	R0.3/R0.9, 22.3/24.0,3.0/R1.6	1615	1929

REGISTERED CIVIL ENGINEER 07-27-09 DATE

2-1-10
PLANS APPROVAL DATE

REGISTERED PROFESSIONAL ENGINEER Paul A. Morel No. C 68491 Exp. 9-30-09 CIVIL STATE OF CALIFORNIA

The State of California or its officers or agents shall not be responsible for the accuracy or completeness of electronic copies of this plan sheet.

OCTA
550 SOUTH MAIN STREET
ORANGE, CA 92863

PBS&J
625 THE CITY DRIVE SOUTH, SUITE 200
ORANGE, CA 92868

PRESTRESSING INFORMATION TABLE NO. 1

Girder	Pjack (Kips)	NO. of Girders	"G"
(A) and (B)	6,820	2	0.823
(C)	3,200	1	0.822
(D) and (E)	7,080	2	0.837

LEGEND

(A) Girder designation

Indicates girder stem width in inch, see (B7-1 / S-3)

NOTE

Girder flare length is measured along ℄ of each girder

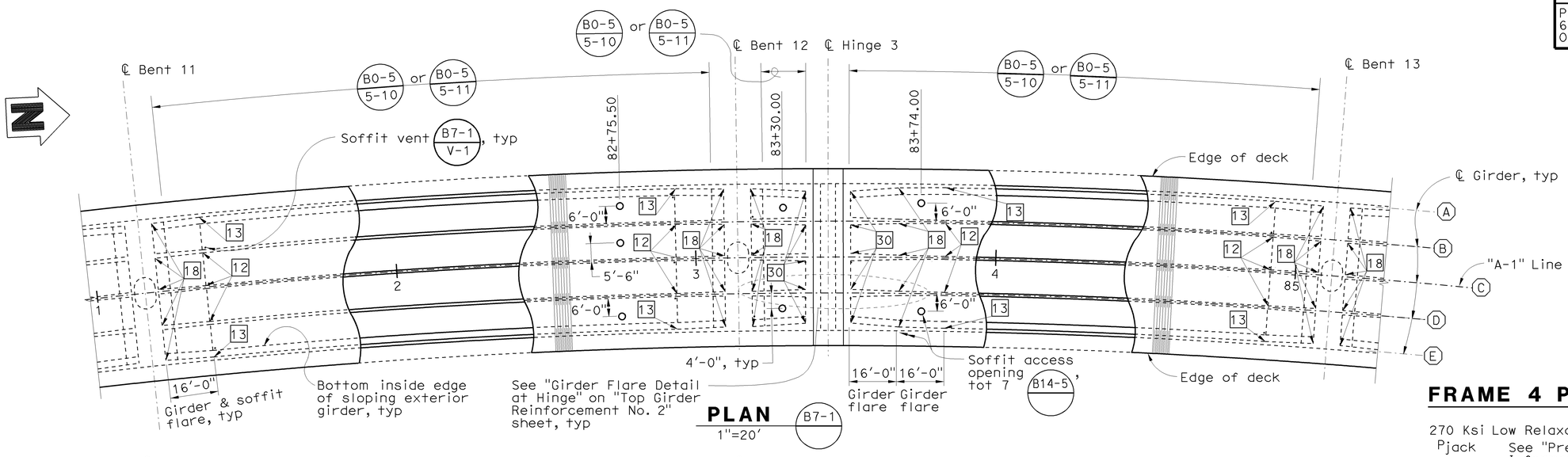

PLAN (B7-1)
1"=20'

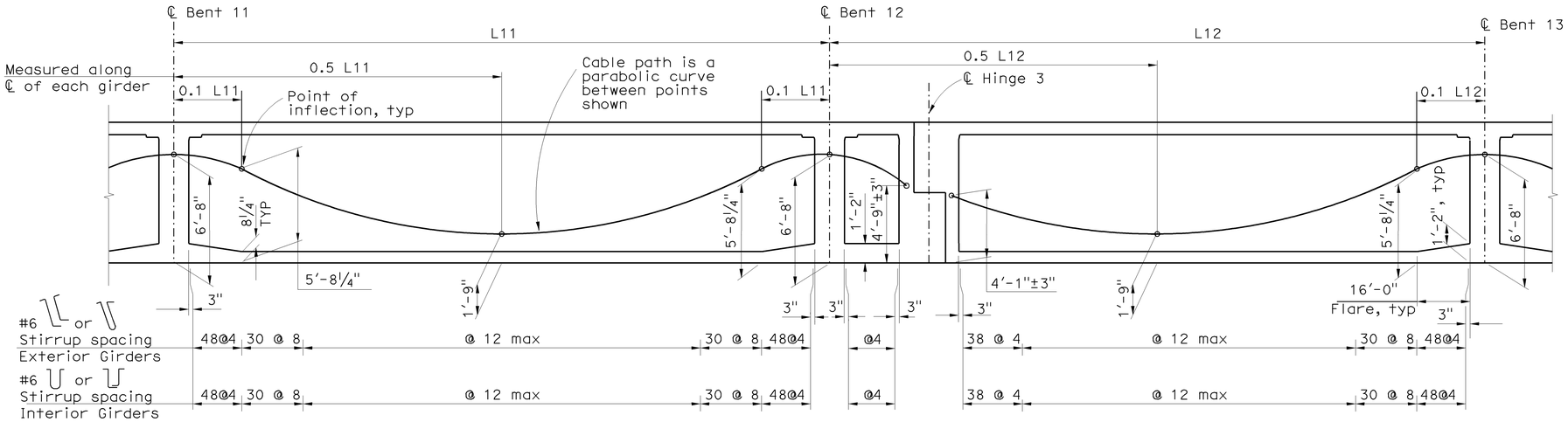

LONGITUDINAL SECTION (B8-5)
No Scale

FRAME 4 PRESTRESSING NOTES

270 Ksi Low Relaxation Strand:
Pjack See "Prestressing Information Table No. 1"
Anchor Set 3/8 inch
Total Number of Girders = See "Prestressing Information Table No. 1"
Distribution of prestress force (Pjack) between girders (A) and (B) and between girders (D) and (E) shall not exceed the ratio of 3:2
Maximum final force variation between girders (A) and (B) and between girders (D) and (E) shall not exceed 725 Kips
Concrete: f'_c=5,000 psi @ 28 days
f'_{ci}=4,000 psi @ time of stressing
Contractor shall submit elongation calculations based on initial stress at ⊠ ="G" times jacking stress (See "Prestressing Information Table No. 1")
Stressing shall be performed from both ends.
Design is based on friction curvature
Coefficient μ= 0.20 and friction
Wobble coefficient k= 0.0002/ft

Sudhakar Vatti
DESIGN OVERSIGHT Sudhakar Vatti
8-10-09
SIGN OFF DATE

	BY	CHECKED
DESIGN	P. Morel	J. Holombo/S. Megally
DETAILS	N. Shu	J. Holombo
QUANTITIES	V. Nong	L. Khaleghi

PREPARED FOR THE STATE OF CALIFORNIA DEPARTMENT OF TRANSPORTATION

Alaedin Moubayed
PROJECT ENGINEER

BRIDGE NO. 55-1098E
POST MILE 24.02

405/605 HOV CONNECTOR
GIRDER LAYOUT NO. 6

DESIGN DETAIL SHEET (ENGLISH) (REV. 2/25/05)

ORIGINAL SCALE IN INCHES FOR REDUCED PLANS 0 1 2 3

CU 12235
EA 071631

DISREGARD PRINTS BEARING EARLIER REVISION DATES
REVISION DATES (PRELIMINARY STAGE ONLY) 02/14/08 06/20/08 09/29/08 10/14/08 03/20/09 04/06/09 07/27/09

SHEET 44 OF 87

FILE => 55-1098e-1-glo06.dgn

USERNAME => trlenard DATE PLOTTED => 03-FEB-2010 TIME PLOTTED => 07:57

DIST	COUNTY	ROUTE	POST MILES TOTAL PROJECT	SHEET No	TOTAL SHEETS
12	Ora	22,405, 605	R0.3/R0.9, 22.3/24.0,3.0/R1.6	1616	1929

REGISTERED CIVIL ENGINEER 07-27-09 DATE

2-1-10
PLANS APPROVAL DATE

The State of California or its officers or agents shall not be responsible for the accuracy or completeness of electronic copies of this plan sheet.

REGISTERED PROFESSIONAL ENGINEER Paul A. Morel No. C 68491 Exp. 9-30-09 CIVIL STATE OF CALIFORNIA

OCTA
550 SOUTH MAIN STREET
ORANGE, CA 92863

PBS&J
625 THE CITY DRIVE SOUTH, SUITE 200
ORANGE, CA 92868

PRESTRESSING INFORMATION TABLE NO. 2

Girder	"A"	"B"	"C"	"D"	"E"	"F"
(A) and (B)	1'-9"	3'-6"	5'-8¼"	5'-6¼"	5'-11½"	0.056
(C)	3'-4"	1'-9"	6'-0"	5'-10"	5'-8"	0.051
(D) and (E)	5'-3"	1'-9"	6'-4½"	6'-2½"	5'-8"	0.184

LEGEND

(A) Girder designation

Indicates girder stem width in inch, see (B7-1 / S-3)

Indicates theoretical point of no movement for stressing

NOTE

Girder flare length is measured along ℄ of each girder

* See "Prestressing Information Table No. 2"

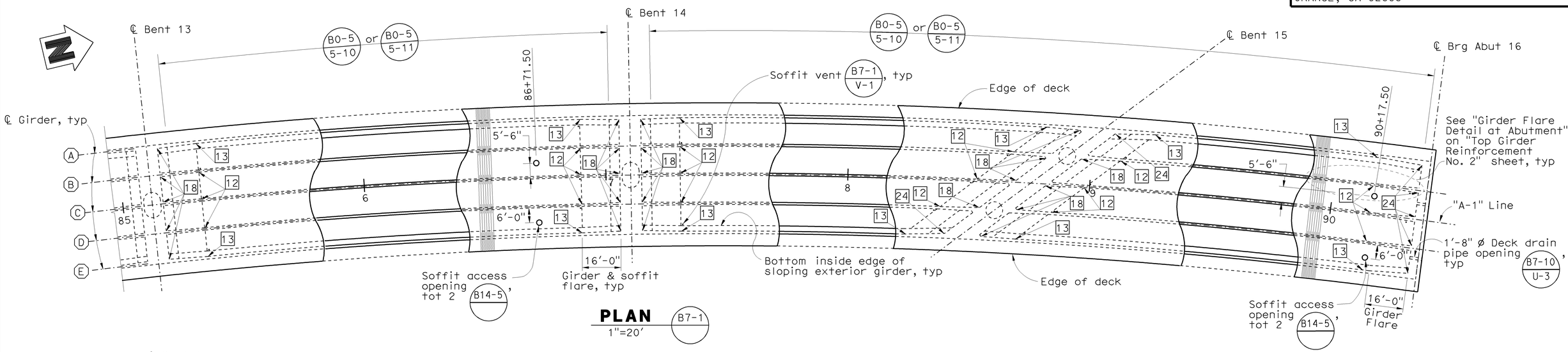

PLAN (B7-1)
1"=20'

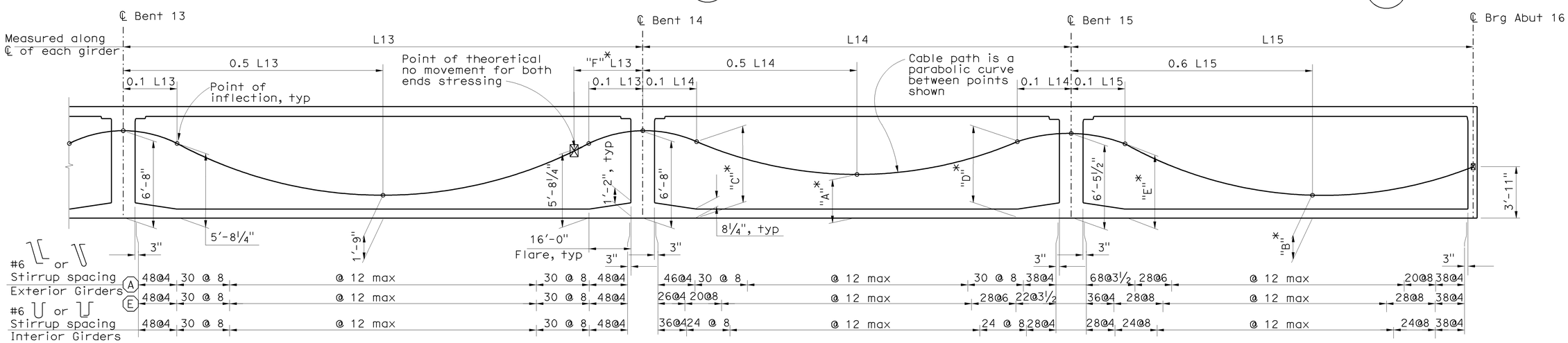

LONGITUDINAL SECTION (B8-5)
No Scale

Sudhakar Vatti
DESIGN OVERSIGHT Sudhakar Vatti
8-10-09
SIGN OFF DATE

	BY	CHECKED
DESIGN	P. Morel	J. Holombo/S. Megally
DETAILS	N. Shu	J. Holombo
QUANTITIES	V. Nong	L. Khaleghi

PREPARED FOR THE STATE OF CALIFORNIA DEPARTMENT OF TRANSPORTATION

Alaedin Moubayed
PROJECT ENGINEER

BRIDGE NO. 55-1098E
POST MILE 24.02

405/605 HOV CONNECTOR
GIRDER LAYOUT NO. 7

DESIGN DETAIL SHEET (ENGLISH) (REV. 2/25/05)

ORIGINAL SCALE IN INCHES FOR REDUCED PLANS 0 1 2 3

CU 12235
EA 071631

DISREGARD PRINTS BEARING EARLIER REVISION DATES

REVISION DATES (PRELIMINARY STAGE ONLY) 02/18/08 06/02/08 09/29/08 10/18/08 03/26/09 04/06/09 07/27/09

SHEET 45 OF 87

FILE => 55-1098e-l-glo07.dgn

USERNAME => rtrenord DATE PLOTTED => 03-FEB-2010 TIME PLOTTED => 07:57

DIST	COUNTY	ROUTE	POST MILES TOTAL PROJECT	SHEET No	TOTAL SHEETS
12	Ora	22,405, 605	R0.3/R0.9, 22.3/24.0,3.0/R1.6	1617	1929

REGISTERED CIVIL ENGINEER 07-27-09 DATE

2-1-10
PLANS APPROVAL DATE

REGISTERED PROFESSIONAL ENGINEER Paul A. Morel No. C 68491 Exp. 9-30-09 CIVIL STATE OF CALIFORNIA

The State of California or its officers or agents shall not be responsible for the accuracy or completeness of electronic copies of this plan sheet.

OCTA
550 SOUTH MAIN STREET
ORANGE, CA 92863

PBS&J
625 THE CITY DRIVE SOUTH, SUITE 200
ORANGE, CA 92868

CAMBER VALUES

Span No.		1/4 Span	1/2 Span	3/4 Span
1		0.04	0.03	0.00
2		0.06	0.06	0.03
3		0.03	0.04	0.02
4		0.02	0.05	0.05
5		-0.01	-0.03	-0.04
6		0.06	0.05	0.02
7		0.05	0.07	0.04
8		0.00	0.02	0.02
9		0.00	-0.02	-0.03
10		0.04	0.04	0.02
11		0.01	0.00	0.00
12	Girder (A),(B)	0.03	0.00	-0.02
	Girder (C)	0.04	0.02	-0.01
	Girder (D),(E)	0.00	-0.02	-0.03
13	Girder (A),(B)	0.08	0.11	0.08
	Girder (C)	0.08	0.12	0.09
	Girder (D),(E)	0.06	0.09	0.06
14	Girder (A),(B)	0.00	0.03	0.03
	Girder (C)	0.00	0.02	0.02
	Girder (D),(E)	0.00	0.00	0.00
15	Girder (A),(B)	0.00	0.01	0.01
	Girder (C)	0.00	0.00	0.00
	Girder (D),(E)	0.07	0.14	0.10

TIME DEPENDENT CAMBER VALUES

Elapsed time in days measured from prestressing short hinge side until closure and load transfer	Hinge 1		Hinge 2		Hinge 3	
	Adjustment "A"	Adjustment "B"	Adjustment "A"	Adjustment "B"	Adjustment "A"	Adjustment "B"
30 days	0.07	-0.06	0.08	-0.03	0.09	0.00
60 days	0.07	-0.09	0.08	-0.06	0.08	-0.03
90 days	0.08	-0.12	0.08	-0.09	0.08	-0.06
120 days	0.08	-0.14	0.08	-0.11	0.08	-0.08
180 days	0.08	-0.14	0.08	-0.11	0.08	-0.08
240 days	0.08	-0.15	0.08	-0.12	0.08	-0.08
360 days	0.08	-0.16	0.08	-0.12	0.08	-0.09
720 days	0.08	-0.17	0.08	-0.13	0.07	-0.10

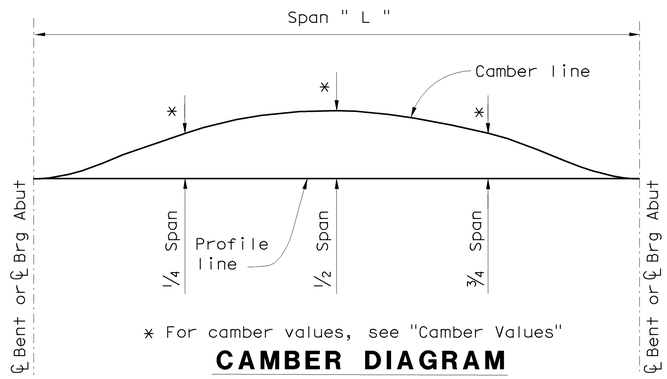

* For camber values, see "Camber Values"

CAMBER DIAGRAM

SPANS 1, 2, 6, 10, 11 & 13 TO 15

No Scale

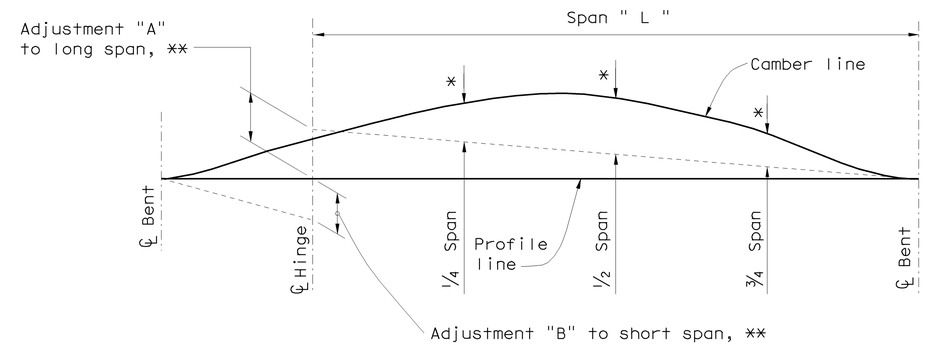

* Adjusted values of camber taken from long cantilever values given in "Camber Values" table. Decrease linearly back to Bent for profile adjustment (add to profile grade)

** See "Time Dependent Camber Values"

CAMBER DIAGRAM

SPANS 5, 9 & 12

No Scale

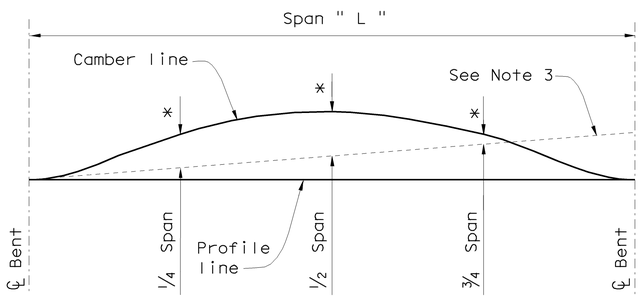

* For camber values, see "Camber Values"

CAMBER DIAGRAM

SPANS 3 & 7

No Scale

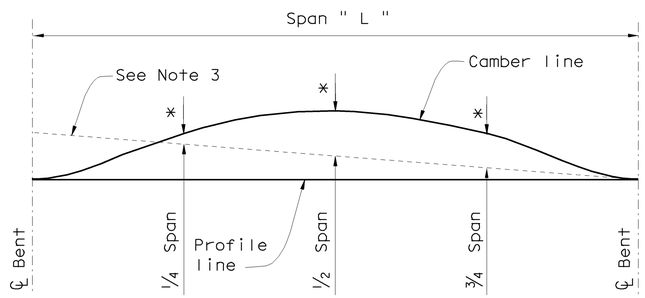

* For camber values, see "Camber Values"

CAMBER DIAGRAM

SPANS 4 & 8

No Scale

NOTES

1. Camber values shown do not include allowance for falsework settlement.
2. Camber values are in feet.
3. Outrigger camber at Bents 4 & 8 is not included in the Camber Values, see Outrigger Camber Diagram on "Bent 4 Layout" and "Bent 8 Layout" sheets.
4. For "Supported Hinge Dead Load + Prestress Reaction", see "Hinge Details No. 2" sheet.

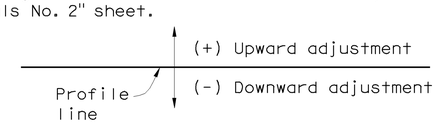

SIGN CONVENTION FOR ADJUSTMENTS "A" & "B"

Sudhakar Vatti
DESIGN OVERSIGHT Sudhakar Vatti
8-10-09
SIGN OFF DATE

	BY	CHECKED
DESIGN	P. Morel	J. Holombo/S. Megally
DETAILS	N. Shu	J. Holombo
QUANTITIES	V. Nong	L. Khaleghi

PREPARED FOR THE STATE OF CALIFORNIA DEPARTMENT OF TRANSPORTATION

Alaedin Moubayed
PROJECT ENGINEER

BRIDGE NO. 55-1098E
POST MILE 24.02

405/605 HOV CONNECTOR

CAMBER DIAGRAMS

DESIGN DETAIL SHEET (ENGLISH) (REV. 2/25/05)

ORIGINAL SCALE IN INCHES FOR REDUCED PLANS 0 1 2 3

CU 12235
EA 071631

DISREGARD PRINTS BEARING EARLIER REVISION DATES

REVISION DATES (PRELIMINARY STAGE ONLY) 02/06/08 02/22/08 03/27/08 10/15/08 03/26/09 04/06/09 07/27/09

SHEET 46 OF 87

FILE => 55-1098e-m-cam.dgn

USERNAME => trlenard DATE PLOTTED => 03-FEB-2010 TIME PLOTTED => 07:57

DIST	COUNTY	ROUTE	POST MILES TOTAL PROJECT	SHEET No	TOTAL SHEETS
12	Ora	22,405, 605	R0.3/R0.9, 22.3/24.0,3.0/R1.6	1618	1929

REGISTERED CIVIL ENGINEER — DATE 07-27-09

2-1-10
PLANS APPROVAL DATE

REGISTERED PROFESSIONAL ENGINEER — Paul A. Morel — No. C 68491 — Exp. 9-30-09 — CIVIL — STATE OF CALIFORNIA

The State of California or its officers or agents shall not be responsible for the accuracy or completeness of electronic copies of this plan sheet.

OCTA
550 SOUTH MAIN STREET
ORANGE, CA 92863

PBS&J
625 THE CITY DRIVE SOUTH, SUITE 200
ORANGE, CA 92868

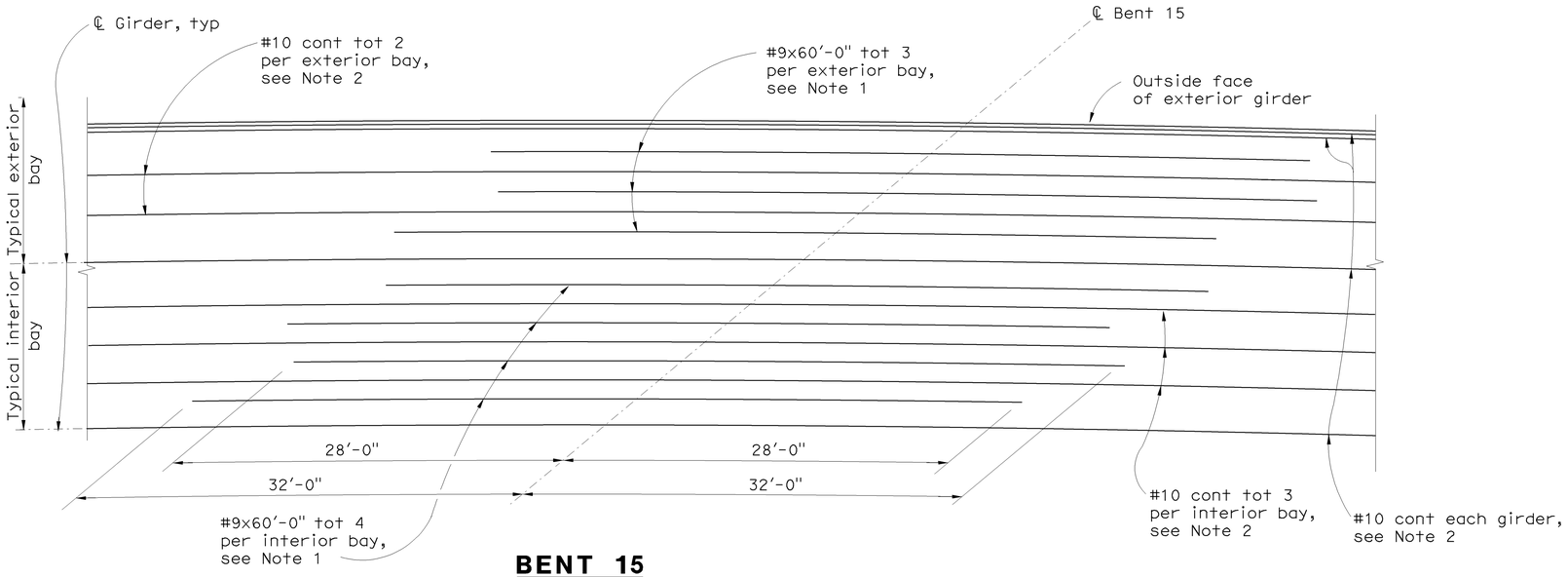

BENT 15

3/16" = 1'-0"

NOTES

1. No splices allowed in #9 bars.
2. Rebar splicing is allowed in #10 bars and the splice shall conform to the requirements of "Service Butt Splice". No splices are allowed within 25'-0" from ℄ Bent and 25'-0" from ℄ span
3. Space reinforcement to clear soffit access openings

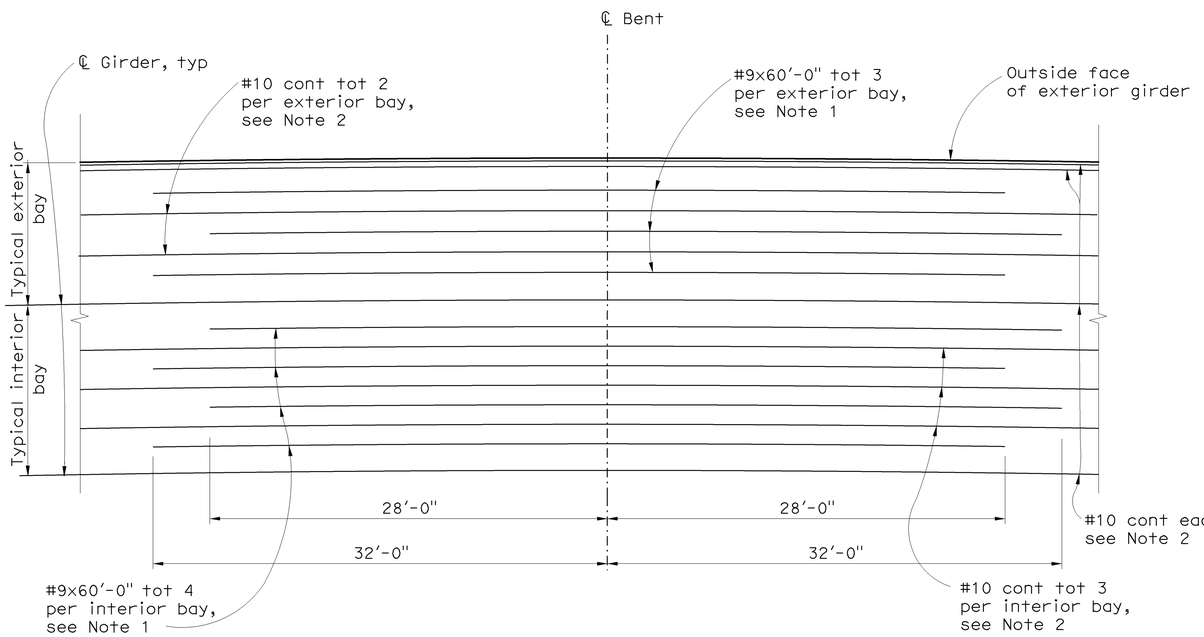

BENTS 2 TO 4, 6 TO 8, 10, 11, 13 & 14

3/16" = 1'-0"

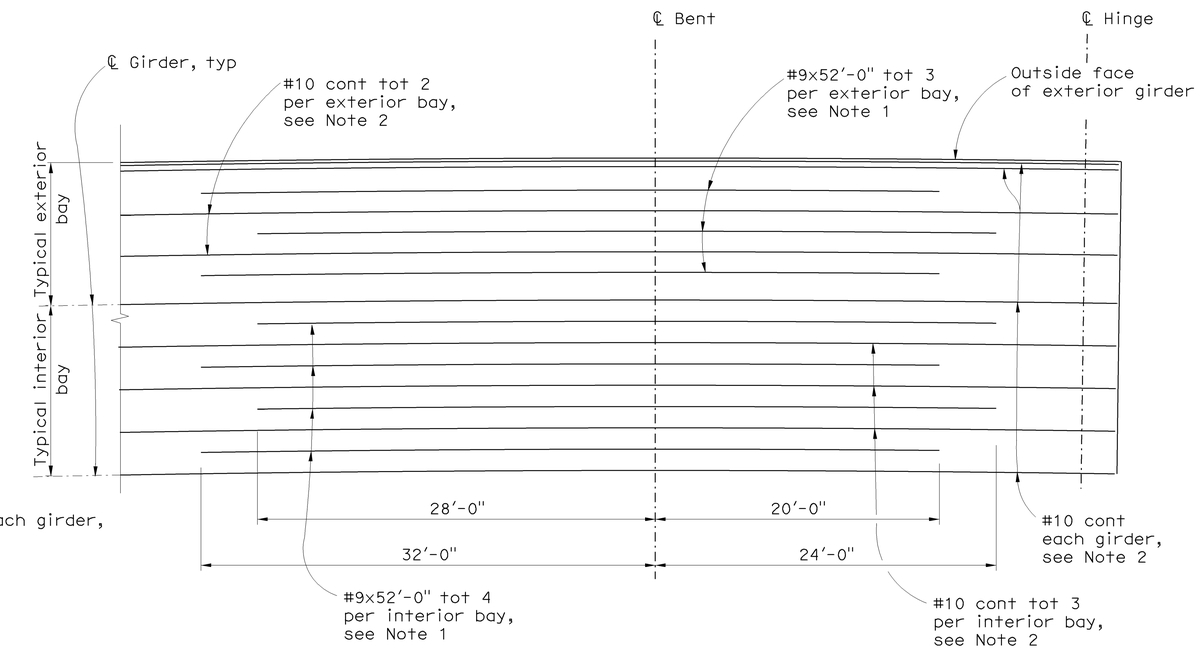

BENTS 5, 9 & 12

3/16" = 1'-0"

Sudhakar Vatti
DESIGN OVERSIGHT — Sudhakar Vatti
8-10-09
SIGN OFF DATE

	BY	CHECKED
DESIGN	P. Morel	J. Holombo/S. Megally
DETAILS	N. Shu	J. Holombo
QUANTITIES	V. Nong	L. Khaleghi

PREPARED FOR THE STATE OF CALIFORNIA DEPARTMENT OF TRANSPORTATION

Alaedin Moubayed
PROJECT ENGINEER

BRIDGE NO. 55-1098E
POST MILE 24.02

405/605 HOV CONNECTOR
BOTTOM GIRDER REINFORCEMENT

DESIGN DETAIL SHEET (ENGLISH) (REV. 2/25/05)

ORIGINAL SCALE IN INCHES FOR REDUCED PLANS 0 1 2 3

CU 12235
EA 071631

DISREGARD PRINTS BEARING EARLIER REVISION DATES

REVISION DATES (PRELIMINARY STAGE ONLY): 02/18/08 06/02/08 09/29/08 10/15/08 03/20/09 04/06/09 07/27/09

SHEET 47 OF 87

FILE => 55-1098e-o-gbot01.dgn

USERNAME => trienard DATE PLOTTED => 03-FEB-2010 TIME PLOTTED => 07:57

DIST	COUNTY	ROUTE	POST MILES TOTAL PROJECT	SHEET No	TOTAL SHEETS
12	Ora	22,405, 605	R0.3/R0.9, 22.3/24.0,3.0/R1.6	1619	1929

REGISTERED CIVIL ENGINEER 07-27-09 DATE

2-1-10
PLANS APPROVAL DATE

REGISTERED PROFESSIONAL ENGINEER Paul A. Morel No. C 68491 Exp. 9-30-09 CIVIL STATE OF CALIFORNIA

The State of California or its officers or agents shall not be responsible for the accuracy or completeness of electronic copies of this plan sheet.

OCTA
550 SOUTH MAIN STREET
ORANGE, CA 92863

PBS&J
625 THE CITY DRIVE SOUTH, SUITE 200
ORANGE, CA 92868

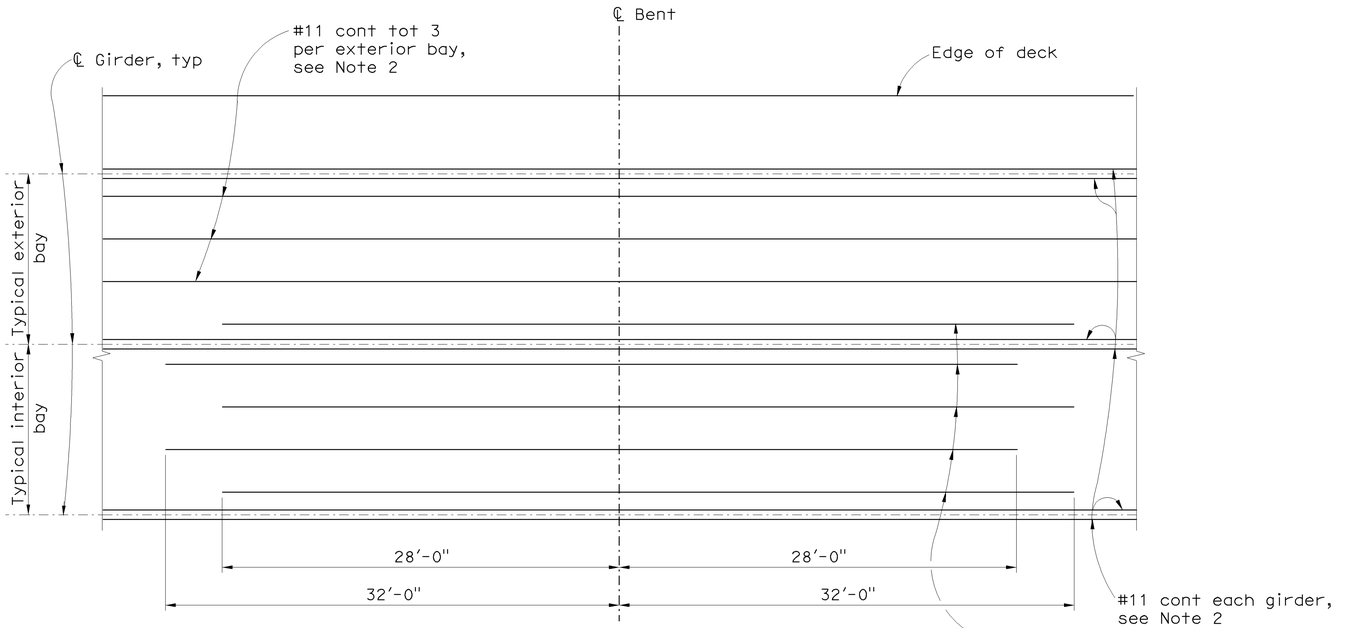

BENTS 2 TO 4, 6 TO 8, 10, 11 & 14
3/16" = 1′-0"

LEGEND

Denotes bundled bars.

NOTES

1. No splices allowed.
2. Rebar splicing is allowed and the splice shall conform to the requirements of "Service Butt Splice". No splices are allowed within 25′-0" from ℄ Bent and 25′-0" from ℄ span
3. Space reinforcement to clear deck drains

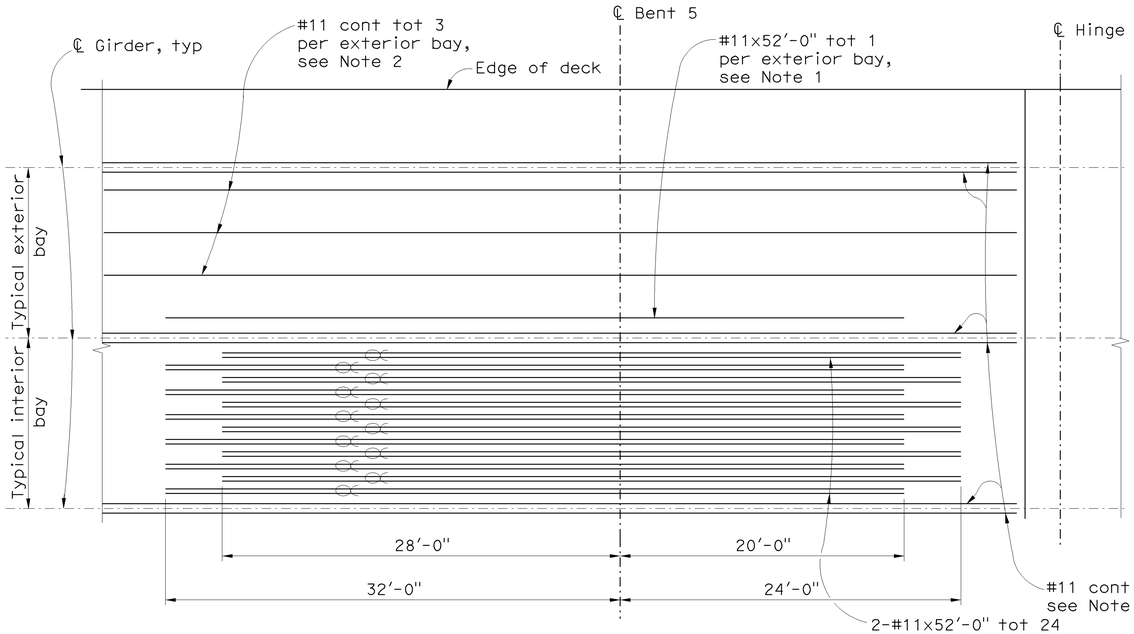

BENT 5
3/16" = 1′-0"

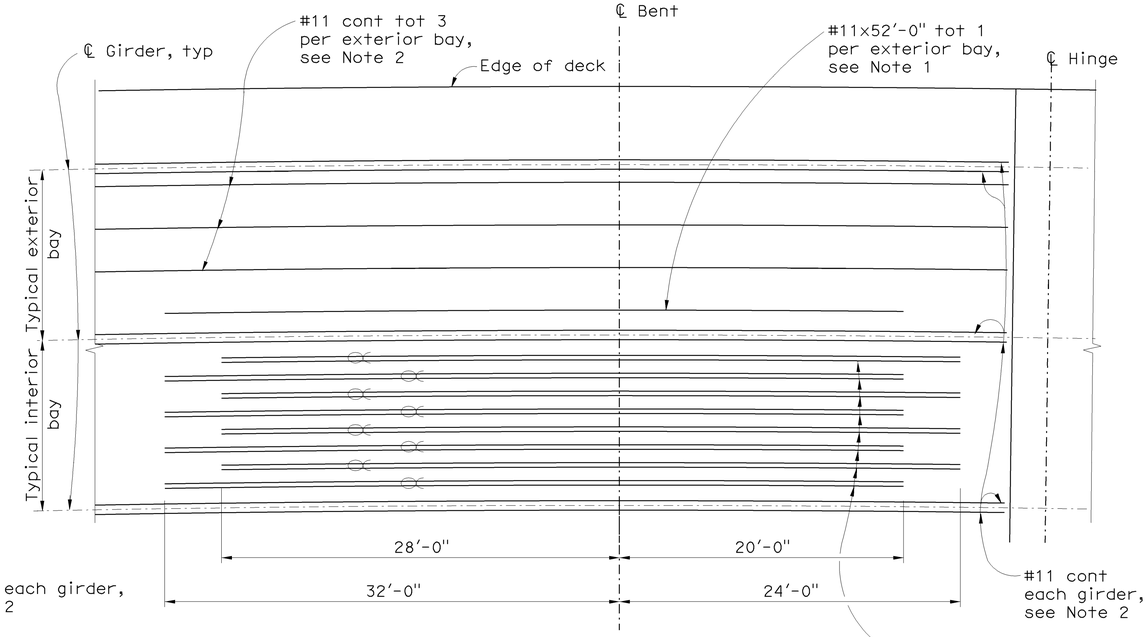

BENTS 9 & 12
3/16" = 1′-0"

Sudhakar Vatti
DESIGN OVERSIGHT Sudhakar Vatti
8-10-09
SIGN OFF DATE

	BY	CHECKED
DESIGN	P. Morel	J. Holombo/S. Megally
DETAILS	N. Shu	J. Holombo
QUANTITIES	V. Nong	L. Khaleghi

PREPARED FOR THE STATE OF CALIFORNIA DEPARTMENT OF TRANSPORTATION

Alaedin Moubayed
PROJECT ENGINEER

BRIDGE NO. 55-1098E
POST MILE 24.02

405/605 HOV CONNECTOR
TOP GIRDER REINFORCEMENT NO. 1

DESIGN DETAIL SHEET (ENGLISH) (REV. 2/25/05)

ORIGINAL SCALE IN INCHES FOR REDUCED PLANS 0 1 2 3

CU 12235
EA 071631

DISREGARD PRINTS BEARING EARLIER REVISION DATES

REVISION DATES (PRELIMINARY STAGE ONLY) 02/18/08 06/02/08 09/29/08 10/15/08 03/26/09 04/06/09 07/27/09

SHEET 48 OF 87

FILE => 55-1098e-o-gr_top01.dgn

USERNAME => friehard DATE PLOTTED => 03-FEB-2010 TIME PLOTTED => 07:57

DIST	COUNTY	ROUTE	POST MILES TOTAL PROJECT	SHEET No	TOTAL SHEETS
12	Ora	22,405, 605	R0.3/R0.9, 22.3/24.0,3.0/R1.6	1620	1929

REGISTERED CIVIL ENGINEER — DATE 07-27-09

2-1-10
PLANS APPROVAL DATE

REGISTERED PROFESSIONAL ENGINEER — Paul A. Morel — No. C 68491 — Exp. 9-30-09 — CIVIL — STATE OF CALIFORNIA

The State of California or its officers or agents shall not be responsible for the accuracy or completeness of electronic copies of this plan sheet.

OCTA
550 SOUTH MAIN STREET
ORANGE, CA 92863

PBS&J
625 THE CITY DRIVE SOUTH, SUITE 200
ORANGE, CA 92868

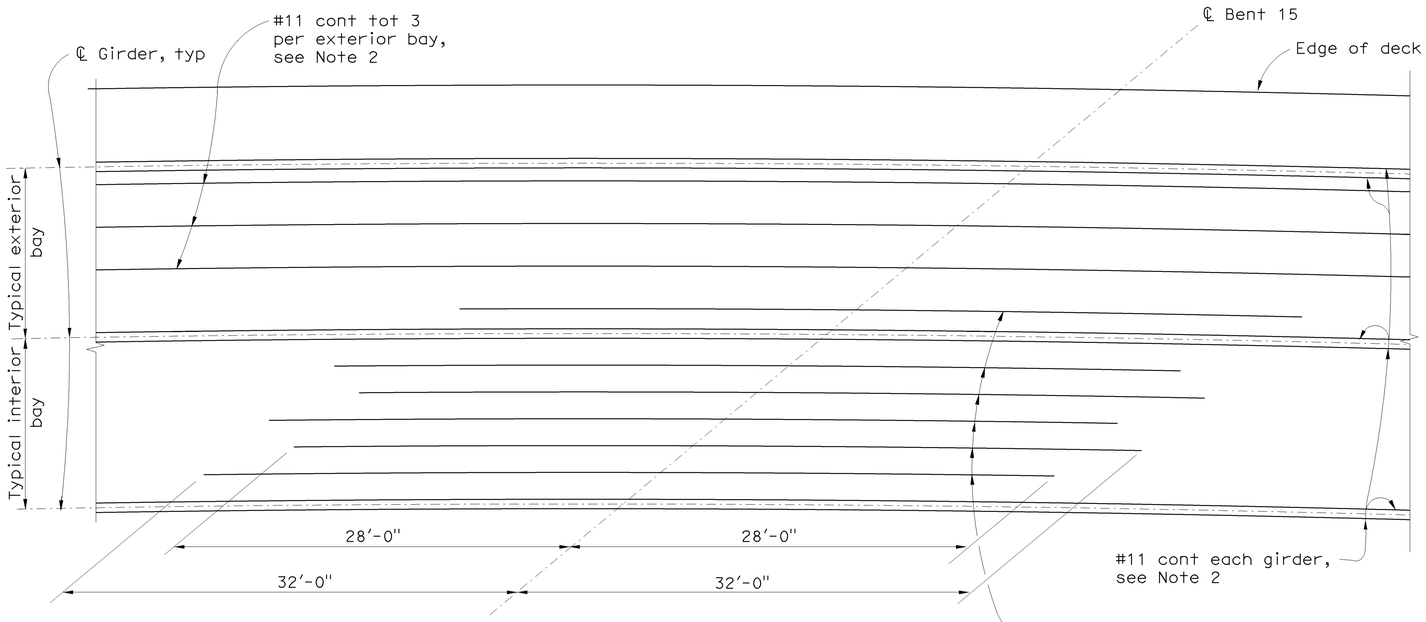

BENT 15
3/16" = 1'-0"

NOTES

1. No splices allowed.
2. Rebar splicing is allowed and the splice shall conform to the requirements of "Service Butt Splice". No splices are allowed within 25'-0" from ℄ Bent and 25'-0" from ℄ span
3. Space reinforcement to clear deck drains

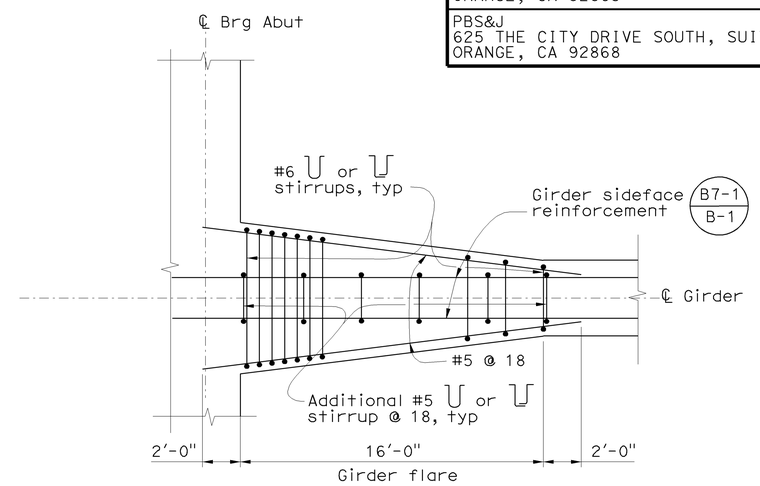

GIRDER FLARE DETAIL AT ABUTMENT
No Scale
Interior girder shown, exterior girder similar

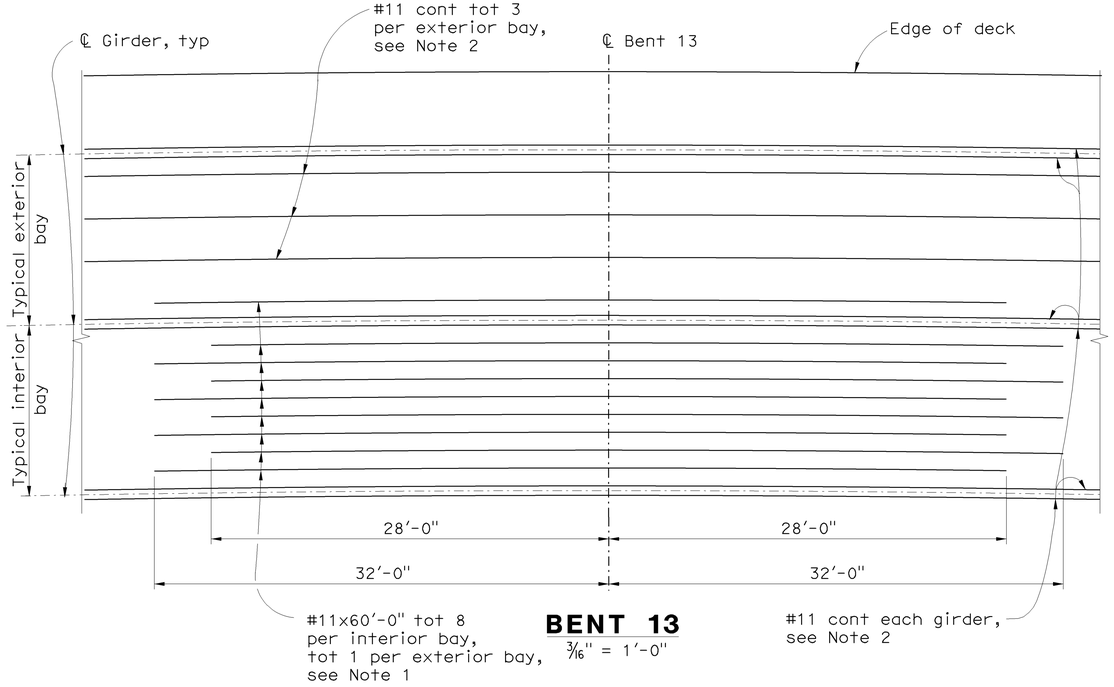

BENT 13
3/16" = 1'-0"

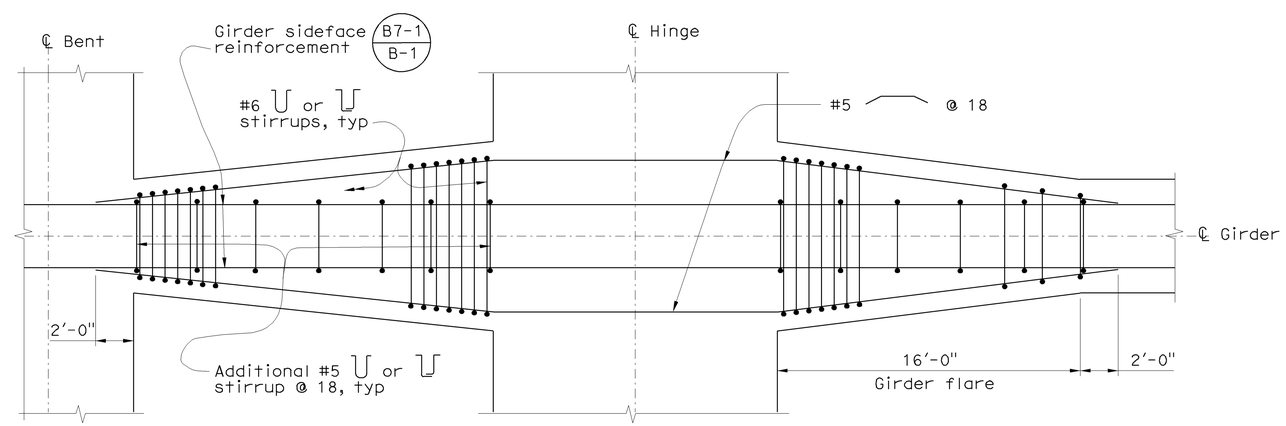

GIRDER FLARE DETAIL AT HINGE
No Scale
Interior girder shown, exterior girder similar

Sudhakar Vatti
DESIGN OVERSIGHT — Sudhakar Vatti
8-10-09
SIGN OFF DATE

	BY	CHECKED
DESIGN	P. Morel	J. Holombo/S. Megally
DETAILS	N. Shu	J. Holombo
QUANTITIES	V. Nong	L. Khaleghi

PREPARED FOR THE STATE OF CALIFORNIA DEPARTMENT OF TRANSPORTATION

Alaedin Moubayed
PROJECT ENGINEER

BRIDGE NO. 55-1098E
POST MILE 24.02

405/605 HOV CONNECTOR
TOP GIRDER REINFORCEMENT NO. 2

DESIGN DETAIL SHEET (ENGLISH) (REV. 2/25/05)

ORIGINAL SCALE IN INCHES FOR REDUCED PLANS 0 1 2 3

CU 12235
EA 071631

DISREGARD PRINTS BEARING EARLIER REVISION DATES
REVISION DATES (PRELIMINARY STAGE ONLY) 02/18/08 06/02/08 09/29/08 10/15/08 03/26/09 04/06/09 07/21/09

SHEET 49 OF 87

FILE => 55-1098e-o-gr_top02.dgn

USERNAME => Friehard DATE PLOTTED => 03-FEB-2010 TIME PLOTTED => 07:57

DIST	COUNTY	ROUTE	POST MILES TOTAL PROJECT	SHEET No	TOTAL SHEETS
12	Ora	22,405, 605	R0.3/R0.9, 22.3/24.0,3.0/R1.6	1621	1929

REGISTERED CIVIL ENGINEER 07-27-09 DATE

2-1-10
PLANS APPROVAL DATE

The State of California or its officers or agents shall not be responsible for the accuracy or completeness of electronic copies of this plan sheet.

REGISTERED PROFESSIONAL ENGINEER Paul A. Morel No. C 68491 Exp. 9-30-09 CIVIL STATE OF CALIFORNIA

OCTA
550 SOUTH MAIN STREET
ORANGE, CA 92863

PBS&J
625 THE CITY DRIVE SOUTH, SUITE 200
ORANGE, CA 92868

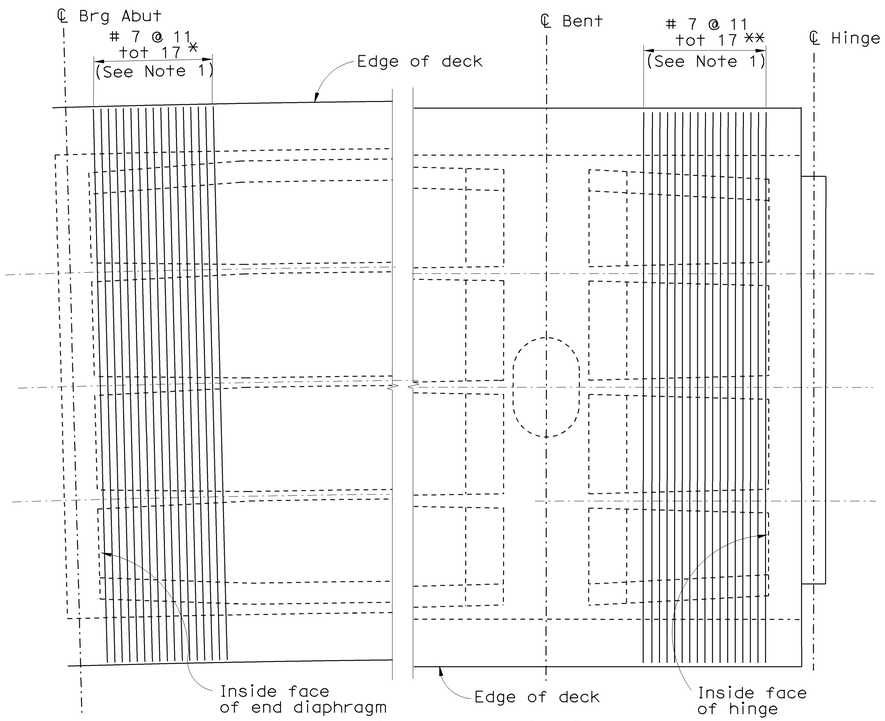

DECK REINFORCEMENT

No Scale

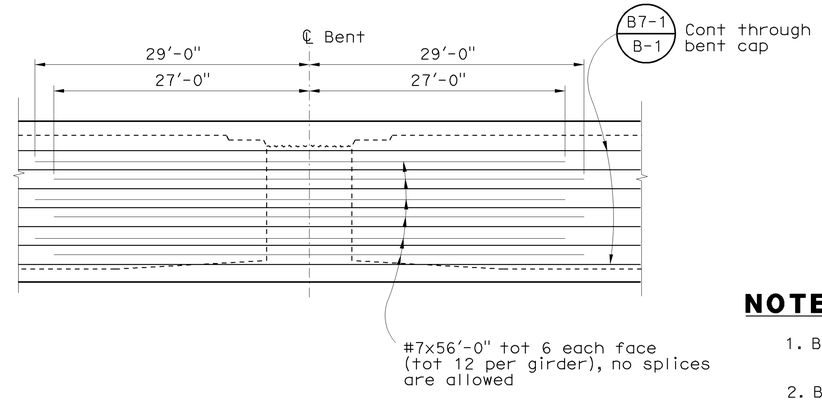

ADDITIONAL GIRDER STEM REINFORCEMENT

No Scale

NOTES

1. Bundled with upper layer of B0-5 / 5-10 or B0-5 / 5-11
2. Bundled with lower layer of #5
* Abut 1 shown, Abut 16 similar.
** Left side of hinge shown, right side of hinge similar, typical all hinges.

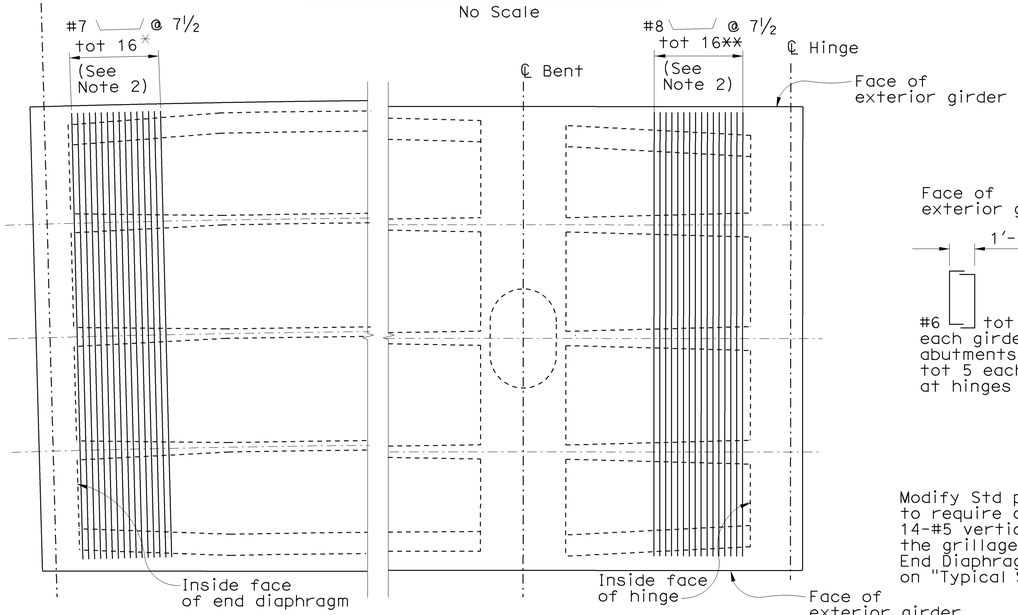

BOTTOM SLAB REINFORCEMENT

No Scale

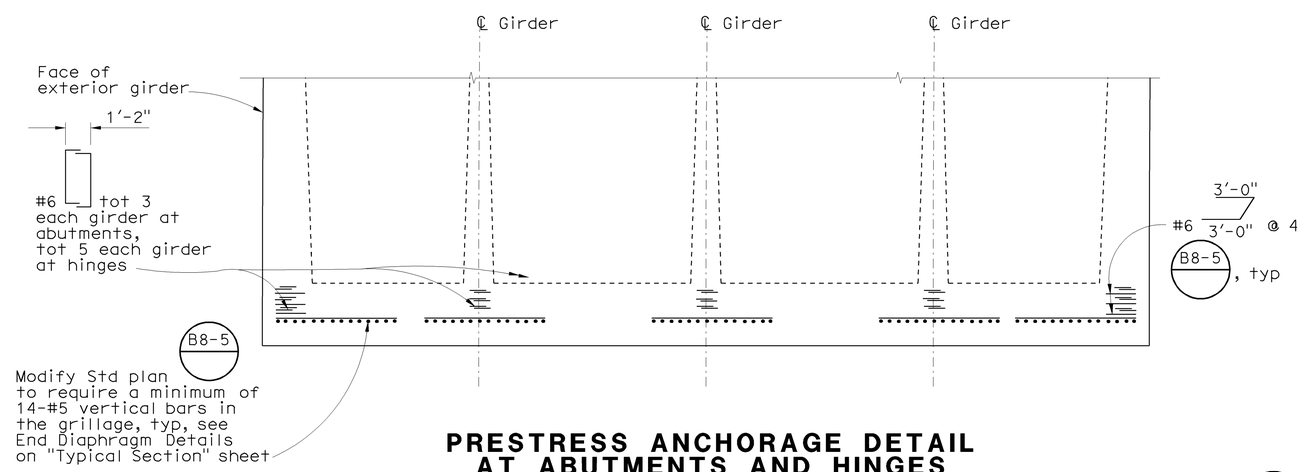

PRESTRESS ANCHORAGE DETAIL AT ABUTMENTS AND HINGES

No Scale

For reinforcement not shown, see B8-5

NOTE:
THE CONTRACTOR SHALL VERIFY ALL CONTROLLING FIELD DIMENSIONS BEFORE ORDERING OR FABRICATING ANY MATERIAL.

Sudhakar Vatti
DESIGN OVERSIGHT Sudhakar Vatti
8-10-09
SIGN OFF DATE

	BY	CHECKED
DESIGN	P. Morel	J. Holombo/S. Megally
DETAILS	N. Shu	J. Holombo
QUANTITIES	V. Nong	L. Khaleghi

PREPARED FOR THE STATE OF CALIFORNIA DEPARTMENT OF TRANSPORTATION

Alaedin Moubayed
PROJECT ENGINEER

BRIDGE NO. 55-1098E
POST MILE 24.02

405/605 HOV CONNECTOR
TOP & BOTTOM SLAB REINFORCEMENT

DESIGN DETAIL SHEET (ENGLISH) (REV. 2/25/05)

ORIGINAL SCALE IN INCHES FOR REDUCED PLANS 0 1 2 3

CU 12235
EA 071631

DISREGARD PRINTS BEARING EARLIER REVISION DATES

REVISION DATES (PRELIMINARY STAGE ONLY) 02/15/08 06/02/08 09/29/08 10/15/08 03/26/09 04/06/09 07/27/09

SHEET 50 OF 87

FILE => 55-1098e-o-grf01.dgn

USERNAME => friehard DATE PLOTTED => 03-FEB-2010 TIME PLOTTED => 07:58

DIST	COUNTY	ROUTE	POST MILES TOTAL PROJECT	SHEET No	TOTAL SHEETS
12	Ora	22,405, 605	R0.3/R0.9, 22.3/24.0,3.0/R1.6	1622	1929

REGISTERED CIVIL ENGINEER 07-27-09 DATE

2-1-10
PLANS APPROVAL DATE

REGISTERED PROFESSIONAL ENGINEER Paul A. Morel No. C 68491 Exp. 9-30-09 CIVIL STATE OF CALIFORNIA

The State of California or its officers or agents shall not be responsible for the accuracy or completeness of electronic copies of this plan sheet.

OCTA
550 SOUTH MAIN STREET
ORANGE, CA 92863

PBS&J
625 THE CITY DRIVE SOUTH, SUITE 200
ORANGE, CA 92868

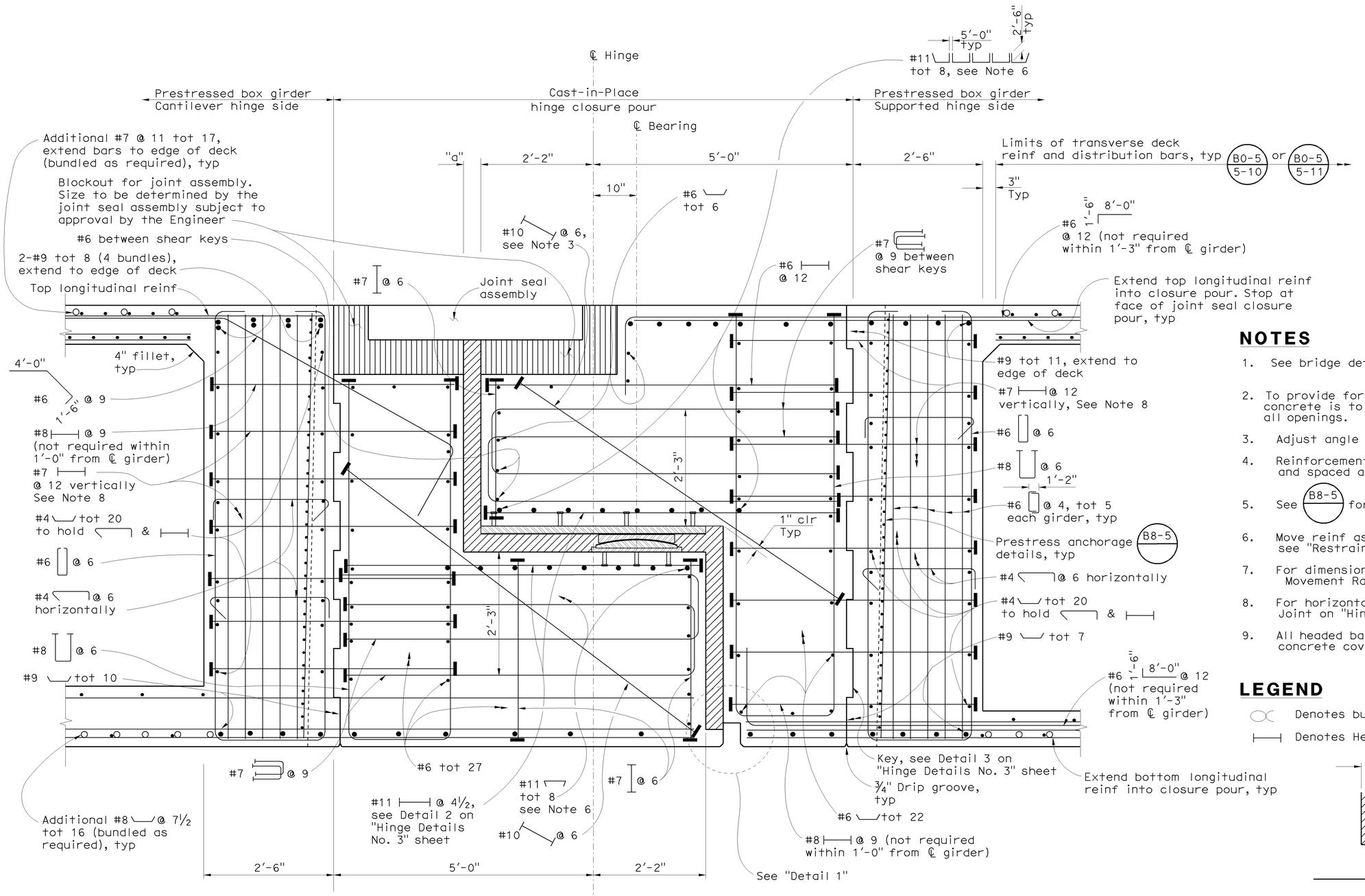

SECTION THRU HINGE

1" = 1'-0"

NOTES

1. See bridge details B0-13 13-1 & B0-13 13-2
2. To provide for free movement of the completed hinge, concrete is to be excluded from the joint by sealing all openings.
3. Adjust angle of bars at shear key to clear.
4. Reinforcement shall be placed parallel to "A-1" line and spaced along ℄ of hinge.
5. See B8-5 for additional details.
6. Move reinf as needed to clear vertical restrainer, see "Restrainer Unit-Type 2" sheet.
7. For dimension "a", see "Joint Seal - Hinge Details Movement Rating Greater than 4" " sheet.
8. For horizontal spacing, see Section At Construction Joint on "Hinge Detail No. 3" sheet.
9. All headed bar heads shall have a minimum clear concrete cover of 2 inches.

LEGEND

Denotes bundled bars.

Denotes Headed bar reinforcement

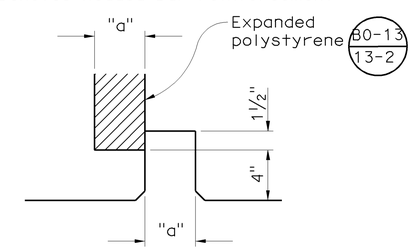

DETAIL 1

No Scale

Sudhakar Vatti
DESIGN OVERSIGHT Sudhakar Vatti
8-10-09
SIGN OFF DATE

DESIGN	BY P. Morel	CHECKED J. Holombo/S. Megally	
DETAILS	BY N. Shu	CHECKED J. Holombo	
QUANTITIES	BY V. Nong	CHECKED L. Khaleghi	

PREPARED FOR THE STATE OF CALIFORNIA DEPARTMENT OF TRANSPORTATION

Alaedin Moubayed
PROJECT ENGINEER

BRIDGE NO. 55-1098E
POST MILE 24.02

405/605 HOV CONNECTOR
HINGE DETAILS NO. 1

DESIGN DETAIL SHEET (ENGLISH) (REV. 2/25/05)

ORIGINAL SCALE IN INCHES FOR REDUCED PLANS 0 1 2 3

CU 12235
EA 071631

DISREGARD PRINTS BEARING EARLIER REVISION DATES

REVISION DATES (PRELIMINARY STAGE ONLY) 02/18/08 06/02/08 09/29/08 10/19/08 03/20/09 04/06/09 07/27/09

SHEET 51 OF 87

FILE => 55-1098e-n-hng01.dgn

USERNAME => rfleehard DATE PLOTTED => 03-FEB-2010 TIME PLOTTED => 07:58

DIST	COUNTY	ROUTE	POST MILES TOTAL PROJECT	SHEET No	TOTAL SHEETS
12	Ora	22,405, 605	R0.3/R0.9, 22.3/24.0,3.0/R1.6	1623	1929

REGISTERED CIVIL ENGINEER 07-27-09 DATE

2-1-10
PLANS APPROVAL DATE

The State of California or its officers or agents shall not be responsible for the accuracy or completeness of electronic copies of this plan sheet.

REGISTERED PROFESSIONAL ENGINEER Paul A. Morel No. C 68491 Exp. 9-30-09 CIVIL STATE OF CALIFORNIA

OCTA
550 SOUTH MAIN STREET
ORANGE, CA 92863

PBS&J
625 THE CITY DRIVE SOUTH, SUITE 200
ORANGE, CA 92868

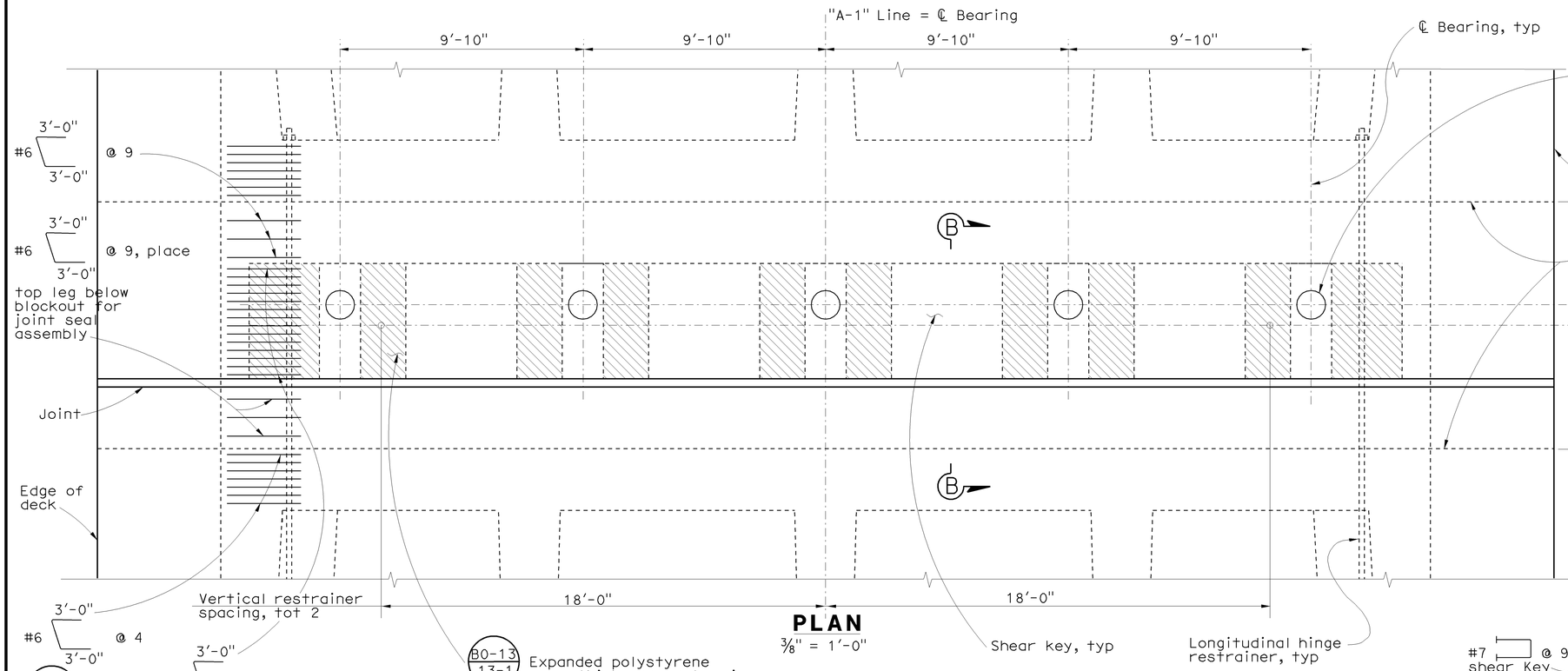

PLAN
3/8" = 1'-0"

SECTION B-B
1/2" = 1'-0"

SECTION THRU ℄ HINGE
3/8" = 1'-0"

Hinge	Supported Hinge Dead Load + Prestress Reaction
1	1580 Kips
2	1550 Kips
3	1570 Kips

NOTES
1. See Equalizing Bolt Detail on "Hinge Details No. 3" sheet,
2. Reinforcement may be adjusted as necessary to accomodate installation of the longitudinal hinge restrainer.

Sudhakar Vatti
DESIGN OVERSIGHT Sudhakar Vatti
8-10-09
SIGN OFF DATE

	BY	CHECKED
DESIGN	P. Morel	J. Holombo/S. Megally
DETAILS	N. Shu	J. Holombo
QUANTITIES	V. Nong	L. Khaleghi

PREPARED FOR THE STATE OF CALIFORNIA DEPARTMENT OF TRANSPORTATION

Alaedin Moubayed
PROJECT ENGINEER

BRIDGE NO. 55-1098E
POST MILE 24.02

405/605 HOV CONNECTOR
HINGE DETAILS NO. 2

DESIGN DETAIL SHEET (ENGLISH) (REV. 2/25/05)

ORIGINAL SCALE IN INCHES FOR REDUCED PLANS 0 1 2 3

CU 12235
EA 071631

DISREGARD PRINTS BEARING EARLIER REVISION DATES

REVISION DATES (PRELIMINARY STAGE ONLY) 02/15/08 06/02/08 09/29/08 10/15/08 03/20/09 04/06/09 07/21/09

SHEET 52 OF 87

FILE => 55-1098e-n-hng02.dgn

USERNAME = friehard DATE PLOTTED => 03-FEB-2010 TIME PLOTTED => 07:58

DIST	COUNTY	ROUTE	POST MILES TOTAL PROJECT	SHEET No	TOTAL SHEETS
12	Ora	22,405, 605	R0.3/R0.9, 22.3/24.0,3.0/R1.6	1624	1929

REGISTERED CIVIL ENGINEER — DATE 07-27-09

2-1-10
PLANS APPROVAL DATE

REGISTERED PROFESSIONAL ENGINEER — Paul A. Morel — No. C 68491 — Exp. 9-30-09 — CIVIL — STATE OF CALIFORNIA

The State of California or its officers or agents shall not be responsible for the accuracy or completeness of electronic copies of this plan sheet.

OCTA
550 SOUTH MAIN STREET
ORANGE, CA 92863

PBS&J
625 THE CITY DRIVE SOUTH, SUITE 200
ORANGE, CA 92868

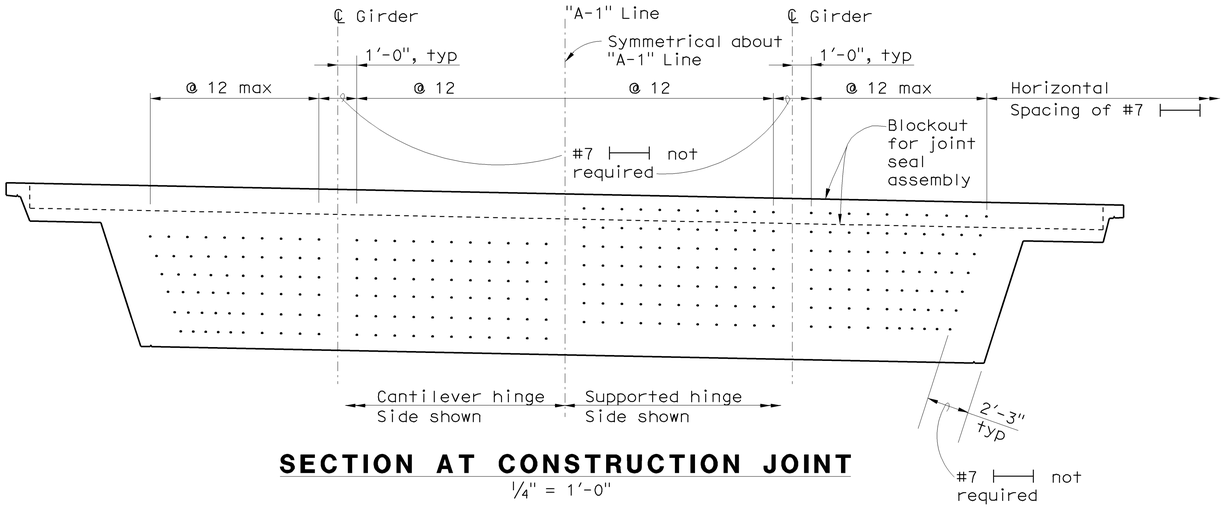

SECTION AT CONSTRUCTION JOINT

1/4" = 1'-0"

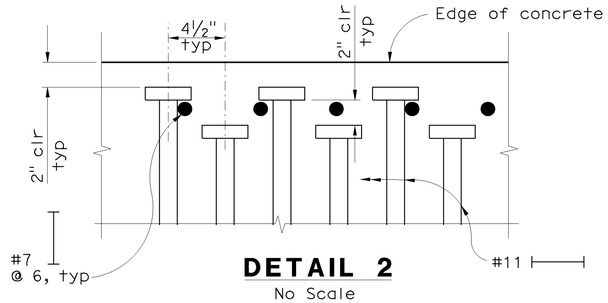

DETAIL 2

No Scale

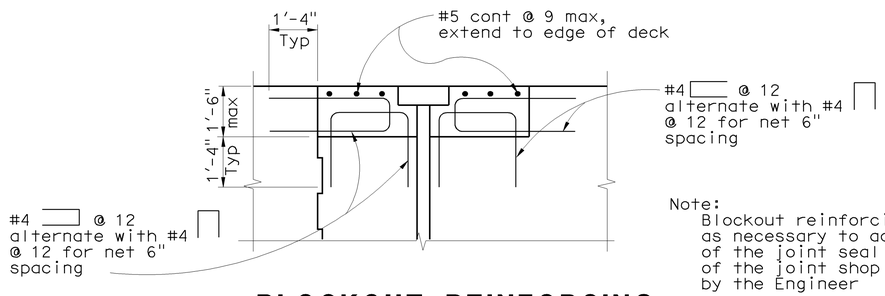

Note:
Blockout reinforcing may be manipulated as necessary to accommodate installation of the joint seal assembly upon approval of the joint shop plans and as permitted by the Engineer

BLOCKOUT REINFORCING

No Scale

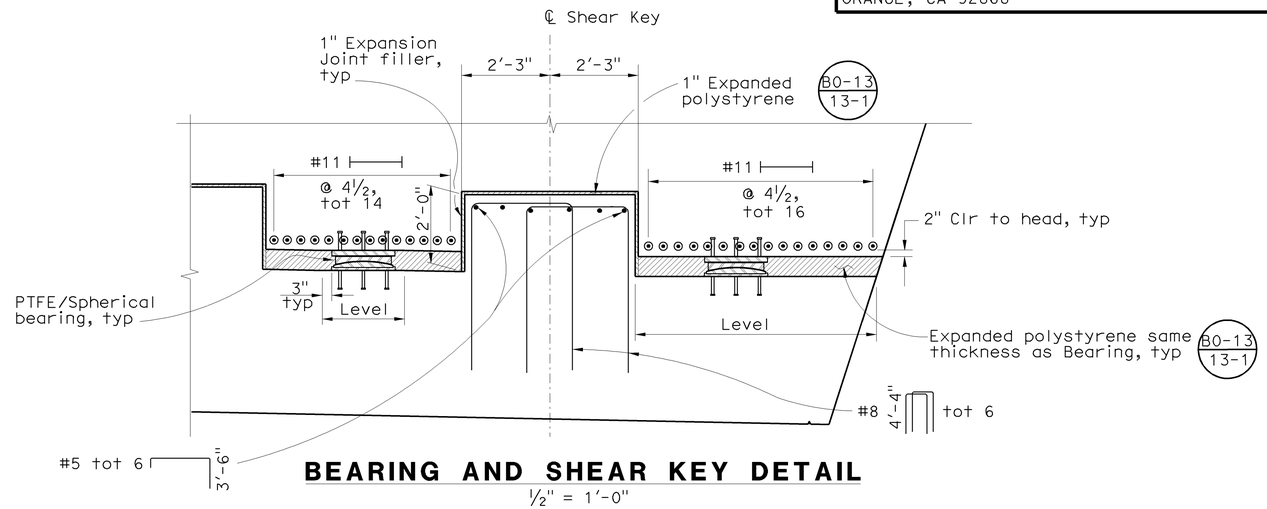

BEARING AND SHEAR KEY DETAIL

1/2" = 1'-0"

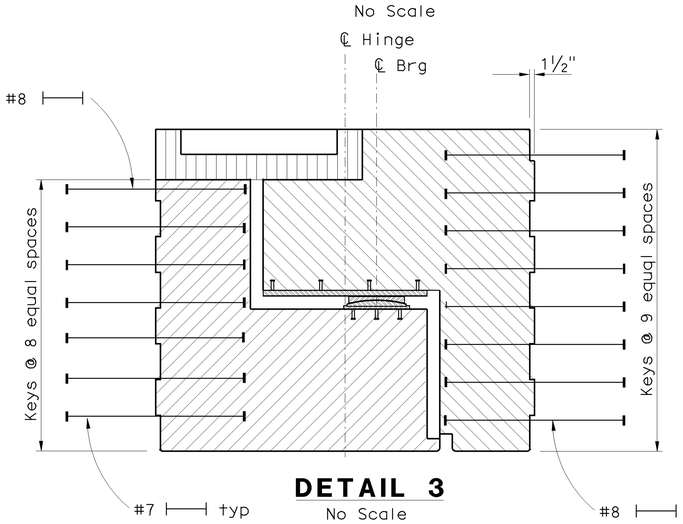

DETAIL 3

No Scale

LEGEND

Denotes blockout & closure pour for joint seal

Denotes reinforced cast-in-place concrete to be placed after both frames have been prestressed. Concrete to be same strength grade as cast-in-place prestressed concrete.

Denotes cast-in-place concrete to be placed after supporting side of hinge is constructed & bearings are properly positioned. Concrete to be same strength grade as cast-in-place prestressed concrete. Falsework shall remain in place until concrete has attained a strength of at least 3600 Psi.

Denotes Headed bar reinforcement

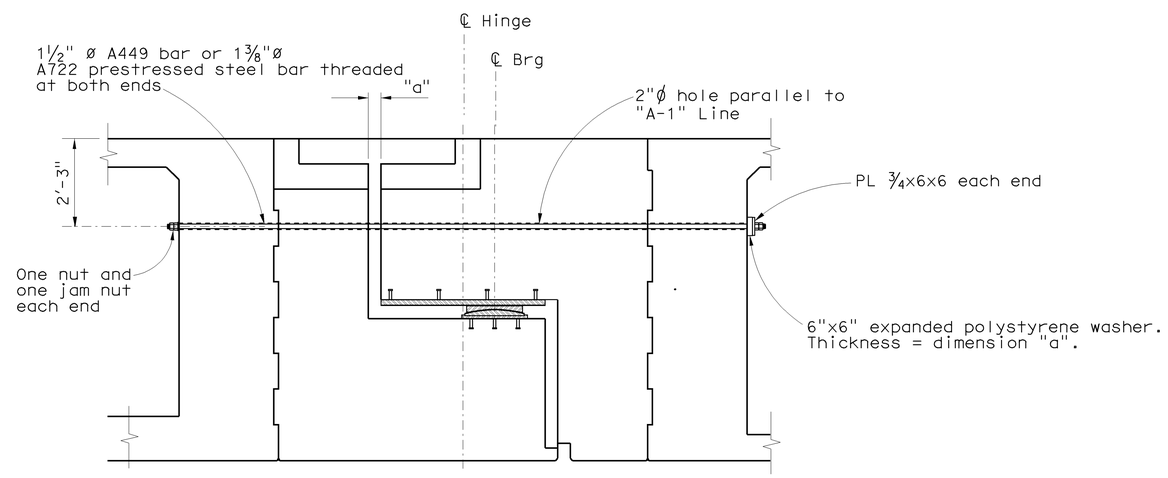

EQUALIZING BOLT DETAIL

1/2" = 1'-0"

Note:
Nuts, bolts and plate washers shall be galvanized.

Sudhakar Vatti
DESIGN OVERSIGHT — Sudhakar Vatti
8-10-09
SIGN OFF DATE

	BY	CHECKED
DESIGN	P. Morel	J. Holombo/S. Megally
DETAILS	N. Shu	J. Holombo
QUANTITIES	V. Nong	L. Khaleghi

PREPARED FOR THE STATE OF CALIFORNIA DEPARTMENT OF TRANSPORTATION

Alaedin Moubayed
PROJECT ENGINEER

BRIDGE NO. 55-1098E
POST MILE 24.02

405/605 HOV CONNECTOR
HINGE DETAILS NO. 3

DESIGN DETAIL SHEET (ENGLISH) (REV. 2/25/05)

ORIGINAL SCALE IN INCHES FOR REDUCED PLANS 0 1 2 3

CU 12235
EA 071631

DISREGARD PRINTS BEARING EARLIER REVISION DATES → 02/18/08 09/08/08 09/29/08 10/15/08 03/26/09 04/06/09 07/27/09

REVISION DATES (PRELIMINARY STAGE ONLY)

SHEET 53 OF 87

FILE => 55-1098e-n-hng03.dgn

USERNAME => trlenard DATE PLOTTED => 03-FEB-2010 TIME PLOTTED => 07:58

Location	Sole Plate			Intermediate Plate (Note 1)			Masonry Plate			Bearing Pad (Notes 1 & 2)	Number of Bearings	Max Vert Load * (Kips)	Min Dead Load * (Kips)
	Tp	W	L	T1	S1	D	Tm	Wm	Lm	H			
Abut 1	1.75	42	30	1.25	7	8.5	0.75	14	28	2.50	5	297	242
Abut 16	1.75	42	30	1.25	7	8.5	0.75	14	28	2.50	5	324	265

* Per bearing

DIST	COUNTY	ROUTE	POST MILES TOTAL PROJECT	SHEET No	TOTAL SHEETS
12	Ora	22,405, 605	R0.3/R0.9, 22.3/24.0,3.0/R1.6	1625	1929

REGISTERED CIVIL ENGINEER 07-27-09 DATE

2-1-10
PLANS APPROVAL DATE

REGISTERED PROFESSIONAL ENGINEER Paul A. Morel No. C 68491 Exp. 9-30-09 CIVIL STATE OF CALIFORNIA

The State of California or its officers or agents shall not be responsible for the accuracy or completeness of electronic copies of this plan sheet.

OCTA
550 SOUTH MAIN STREET
ORANGE, CA 92863

PBS&J
625 THE CITY DRIVE SOUTH, SUITE 200
ORANGE, CA 92868

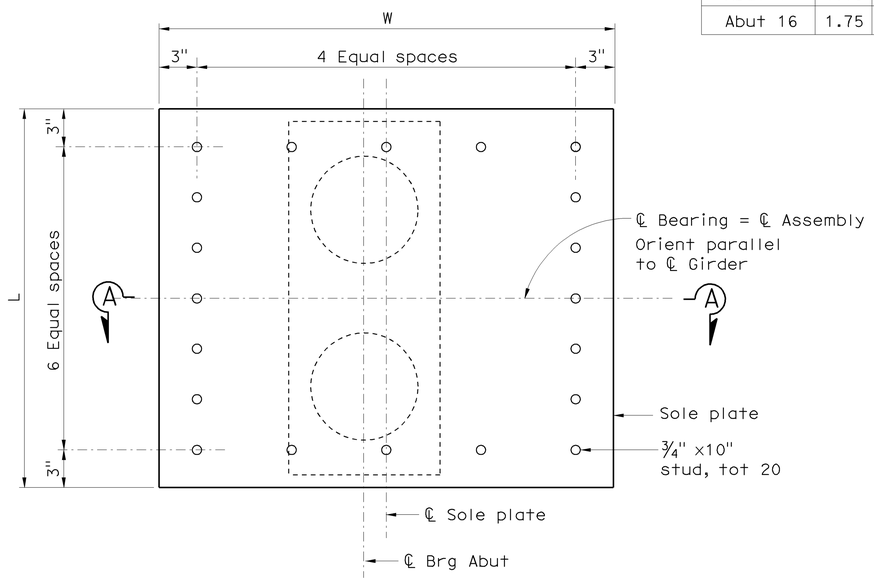

SOLE PLATE PLAN
No Scale

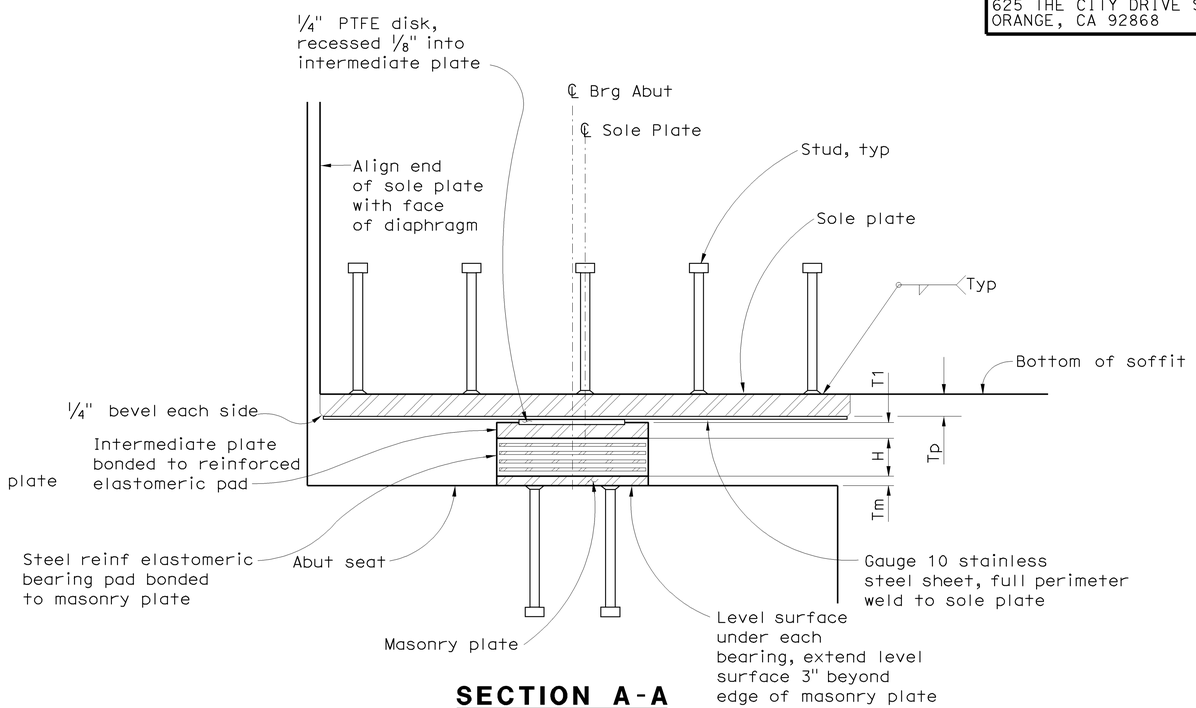

SECTION A-A
No Scale

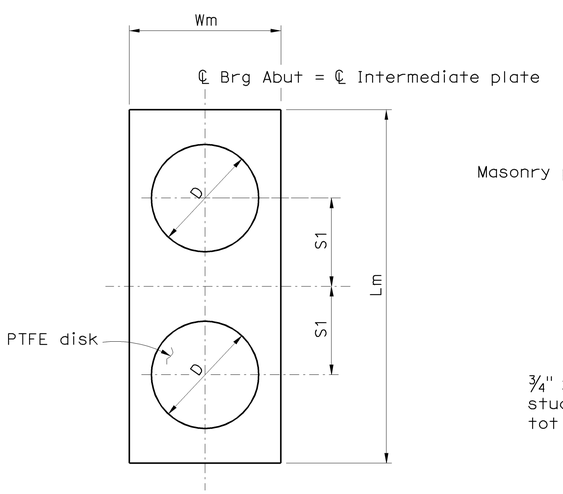

INTERMEDIATE PLATE PLAN
No Scale

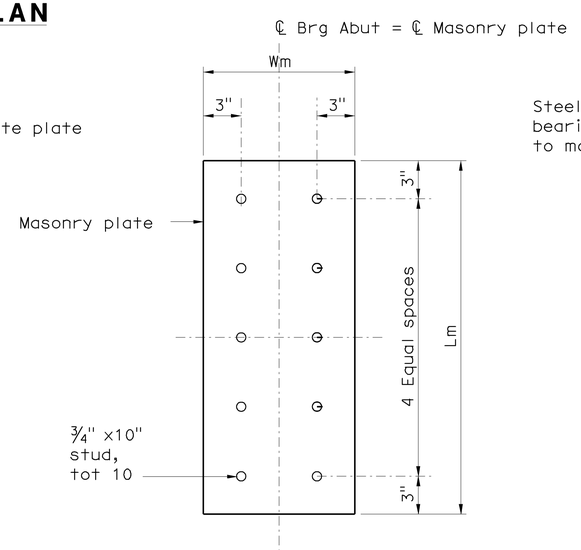

MASONRY PLATE PLAN
No Scale

NOTES

1. Intermediate Plate and Elastomeric Bearing Pad Plan dimensions same as Masonry Plate.
2. Elastomeric thickness only.
3. All dimensions are in inch unless otherwise shown.
4. Expanded polystyrene not shown.

Sudhakar Vatti
DESIGN OVERSIGHT Sudhakar Vatti
8-10-09
SIGN OFF DATE

	BY	CHECKED
DESIGN	P. Morel	J. Holombo/S. Megally
DETAILS	N. Shu	J. Holombo
QUANTITIES	V. Nong	L. Khaleghi

PREPARED FOR THE STATE OF CALIFORNIA DEPARTMENT OF TRANSPORTATION

Alaedin Moubayed
PROJECT ENGINEER

BRIDGE NO. 55-1098E
POST MILE 24.02

405/605 HOV CONNECTOR
PTFE/ELASTOMERIC BEARING DETAILS

DESIGN DETAIL SHEET (ENGLISH) (REV. 2/25/05)

ORIGINAL SCALE IN INCHES FOR REDUCED PLANS 0 1 2 3

CU 12235
EA 071631

DISREGARD PRINTS BEARING EARLIER REVISION DATES

REVISION DATES (PRELIMINARY STAGE ONLY) 02/18/08 06/02/08 09/29/08 10/18/08 03/20/09 04/06/09 07/27/09

SHEET 54 OF 87

FILE => 55-1098e-q-brgel.dgn

USERNAME => trienard DATE PLOTTED => 03-FEB-2010 TIME PLOTTED => 07:58

DIST	COUNTY	ROUTE	POST MILES TOTAL PROJECT	SHEET No	TOTAL SHEETS
12	Ora	22,405, 605	R0.3/R0.9, 22.3/24.0,3.0/R1.6	1626	1929

REGISTERED CIVIL ENGINEER 07-27-09 DATE

2-1-10
PLANS APPROVAL DATE

REGISTERED PROFESSIONAL ENGINEER Paul A. Morel No. C 68491 Exp. 9-30-09 CIVIL STATE OF CALIFORNIA

The State of California or its officers or agents shall not be responsible for the accuracy or completeness of electronic copies of this plan sheet.

OCTA
550 SOUTH MAIN STREET
ORANGE, CA 92863

PBS&J
625 THE CITY DRIVE SOUTH, SUITE 200
ORANGE, CA 92868

SPHERICAL BEARING TABLE

LOCATION	MAXIMUM VERTICAL LOAD* (kips)	MINIMUM DEAD LOAD* (kips)	DESIGN ROTATION (Radians)	CONCAVE PLATE						CONVEX PLATE		MASONRY PLATE			SOLE PLATE			ASSEMBLY HEIGHT
				WIDTH / LENGTH	FLAT PTFE AREA(in 2)	DIAMETER	SPHERICAL RADIUS	MINIMUM THICKNESS	MAXIMUM THICKNESS	DIAMETER	MAXIMUM THICKNESS	WIDTH	LENGTH	THICKNESS	WIDTH	LENGTH	THICKNESS	
				L_{cp}	A_{PTFE}	D_m	R_{act}	T_{min}	T_{max}	C_m	H_{act}	W_{mp}	L_{mp}	T_{mp}	W_{sp}	L_{sp}	T_{sp}	A_h
Hinge 1	580	360	0.035	16.125	169	15	32.50	0.75	1.875	17.25	2.00	20	20	1.25	20	52	2.00	6.07
Hinge 2	560	350	0.035	16.125	169	15	32.50	0.75	1.875	17.25	2.00	20	20	1.25	20	52	2.00	6.07
Hinge 3	560	350	0.035	16.125	169	15	32.50	0.75	1.875	17.25	2.00	20	20	1.25	20	52	2.00	6.07

* Per bearing

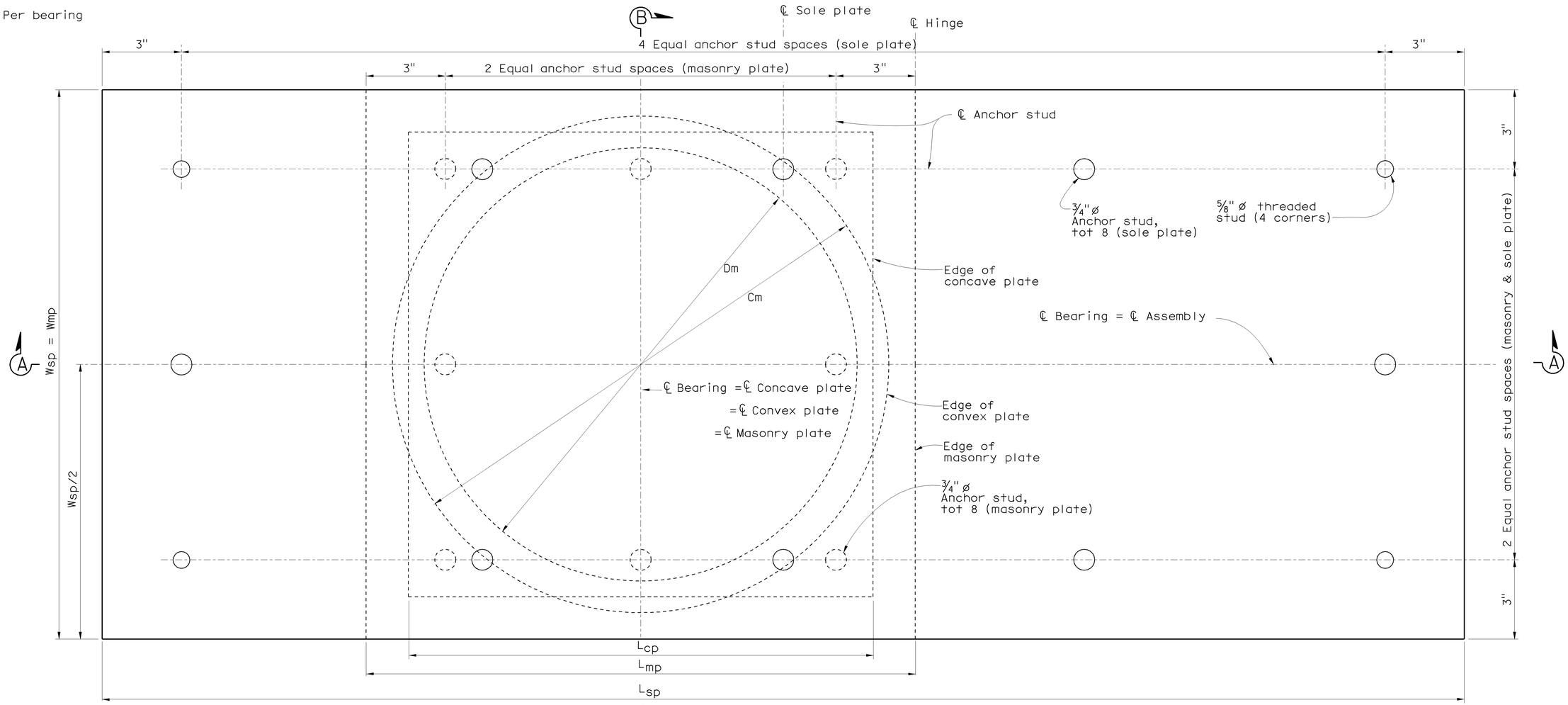

PLAN
No Scale

Direction of stationing

NOTES:

1. For Sections A-A & B-B, see "PTFE/Spherical Bearing Details No. 2 " sheet
2. All dimensions shown are to steel, unless noted otherwise.
3. All dimensions are in inch unless otherwise shown.

Sudhakar Vatti
DESIGN OVERSIGHT Sudhakar Vatti
8-10-09
SIGN OFF DATE

	BY	CHECKED
DESIGN	P. Morel	J. Holombo/S. Megally
DETAILS	N. Shu	J. Holombo
QUANTITIES	V. Nong	L. Khaleghi

PREPARED FOR THE STATE OF CALIFORNIA DEPARTMENT OF TRANSPORTATION

Alaedin Moubayed
PROJECT ENGINEER

BRIDGE NO. 55-1098E
POST MILE 24.02

405/605 HOV CONNECTOR
PTFE/SPHERICAL BEARING DETAILS NO. 1

DESIGN DETAIL SHEET (ENGLISH) (REV. 2/25/05)

ORIGINAL SCALE IN INCHES FOR REDUCED PLANS 0 1 2 3

CU 12235
EA 071631

DISREGARD PRINTS BEARING EARLIER REVISION DATES

REVISION DATES (PRELIMINARY STAGE ONLY) 02/18/08 06/02/08 09/29/08 10/13/08 03/20/09 04/06/09 07/27/09

SHEET 55 OF 87

FILE => 55-1098e-q-brgsp01.dgn

USERNAME => friehard DATE PLOTTED => 03-FEB-2010 TIME PLOTTED => 07:58

DIST	COUNTY	ROUTE	POST MILES TOTAL PROJECT	SHEET No	TOTAL SHEETS
12	Ora	22,405, 605	R0.3/R0.9, 22.3/24.0,3.0/R1.6	1627	1929

REGISTERED CIVIL ENGINEER 07-27-09 DATE

2-1-10
PLANS APPROVAL DATE

REGISTERED PROFESSIONAL ENGINEER Paul A. Morel No. C 68491 Exp. 9-30-09 CIVIL STATE OF CALIFORNIA

The State of California or its officers or agents shall not be responsible for the accuracy or completeness of electronic copies of this plan sheet.

OCTA
550 SOUTH MAIN STREET
ORANGE, CA 92863

PBS&J
625 THE CITY DRIVE SOUTH, SUITE 200
ORANGE, CA 92868

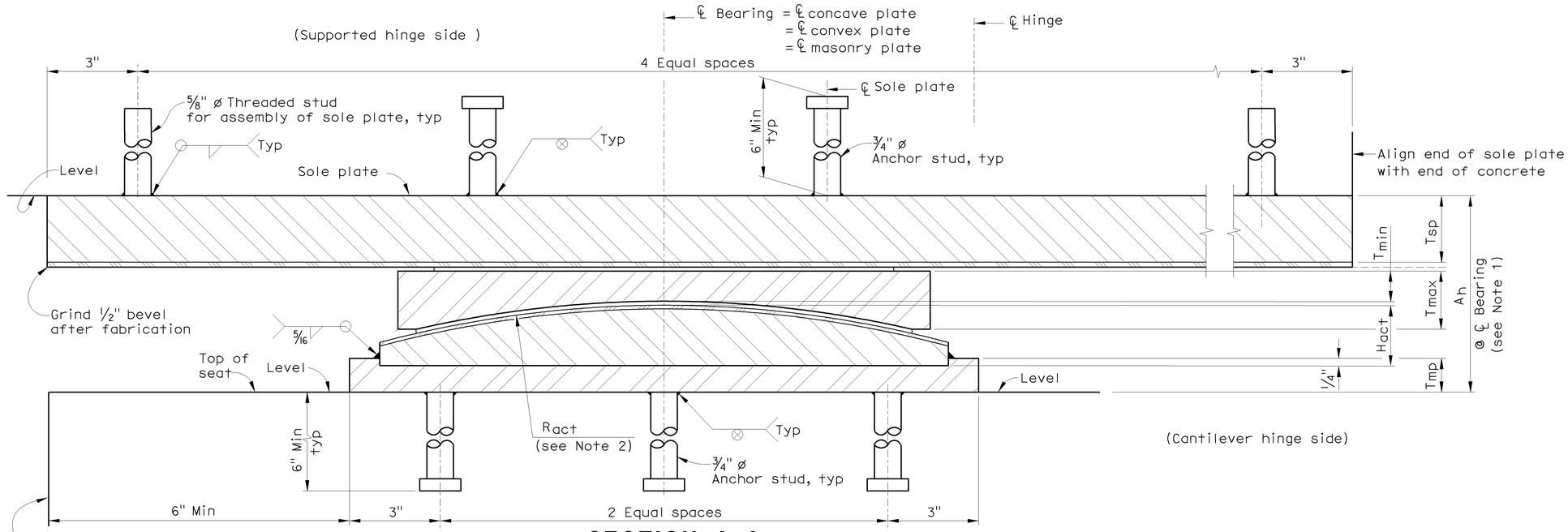

SECTION A-A

No Scale

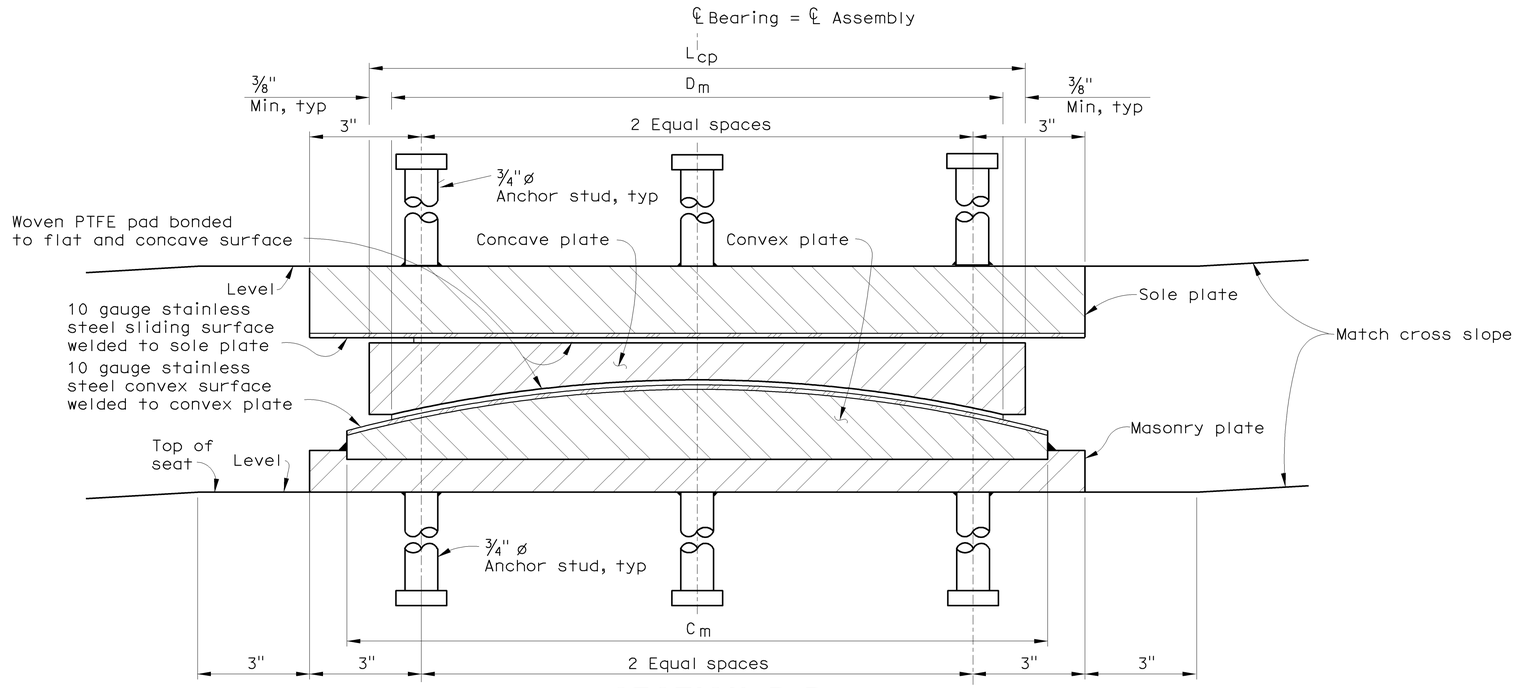

SECTION B-B

No Scale

NOTES:

1. Overall height includes PTFE, substratum and stainless steel.
2. Radius measured to sliding surface.
3. All dimensions are to steel, unless otherwise shown.
4. For dimensions not shown, see Spherical Bearing Table on "PTFE/Spherical Bearing Details No. 1" sheet.
5. Expanded polystyrene not shown.

Sudhakar Vatti
DESIGN OVERSIGHT Sudhakar Vatti
8-10-09
SIGN OFF DATE

DESIGN	BY P. Morel	CHECKED J. Holombo/S. Megally	
DETAILS	BY N. Shu	CHECKED J. Holombo	
QUANTITIES	BY V. Nong	CHECKED L. Khaleghi	

PREPARED FOR THE STATE OF CALIFORNIA DEPARTMENT OF TRANSPORTATION

Alaedin Moubayed
PROJECT ENGINEER

BRIDGE NO. 55-1098E
POST MILE 24.02

405/605 HOV CONNECTOR
PTFE/SPHERICAL BEARING DETAILS NO. 2

DESIGN DETAIL SHEET (ENGLISH) (REV. 2/25/05)

ORIGINAL SCALE IN INCHES FOR REDUCED PLANS 0 1 2 3

CU 12235
EA 071631

DISREGARD PRINTS BEARING EARLIER REVISION DATES

REVISION DATES (PRELIMINARY STAGE ONLY) 02/18/08 06/02/08 09/29/08 10/15/08 03/26/09 04/06/09 07/27/09

SHEET 56 OF 87

FILE => 55-1098e-q-brgsp02.dgn

USERNAME => friehard DATE PLOTTED => 03-FEB-2010 TIME PLOTTED => 07:58

DIST	COUNTY	ROUTE	POST MILES TOTAL PROJECT	SHEET No	TOTAL SHEETS
12	Ora	22,405, 605	R0.3/R0.9, 22.3/24.0,3.0/R1.6	1628	1929

REGISTERED CIVIL ENGINEER 07-27-09 DATE

2-1-10
PLANS APPROVAL DATE

REGISTERED PROFESSIONAL ENGINEER Paul A. Morel No. C 68491 Exp. 9-30-09 CIVIL STATE OF CALIFORNIA

The State of California or its officers or agents shall not be responsible for the accuracy or completeness of electronic copies of this plan sheet.

OCTA
550 SOUTH MAIN STREET
ORANGE, CA 92863

PBS&J
625 THE CITY DRIVE SOUTH, SUITE 200
ORANGE, CA 92868

NOTES

1. For details not shown, see Bridge Plans
2. Coordinate blockout dimensions with joint seal assembly manufacturer

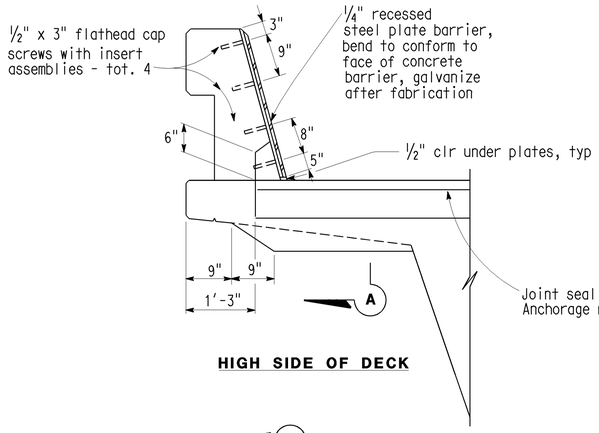

HIGH SIDE OF DECK

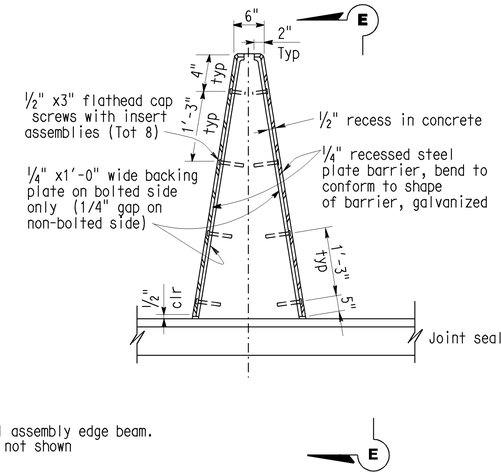

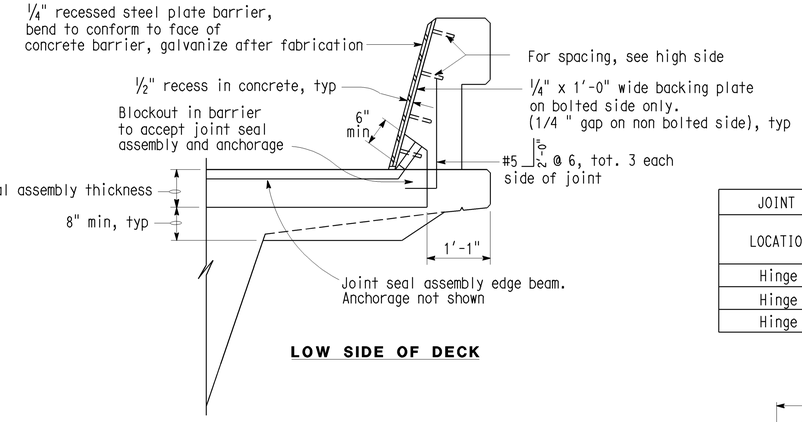

LOW SIDE OF DECK

SEAL INSTALLATION

¾" = 1'-0"

JOINT INFORMATION		"a" DIMENSIONS			
LOCATION	MOVEMENT RATING (M.R.)	SKEW	WINTER	SPRING & FALL	SUMMER
Hinge 1	13"	0	6"	4½"	3"
Hinge 2	10½"	0	4⅞"	3⅝"	2½"
Hinge 3	6½"	0	3"	2¼"	1½"

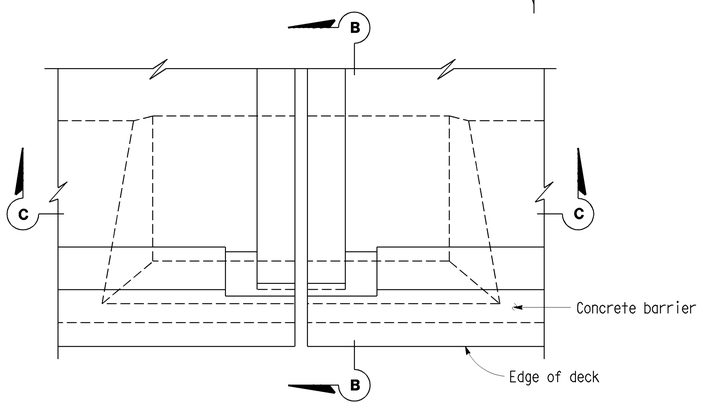

PLAN - DECK JOINT

¾" = 1'-0"

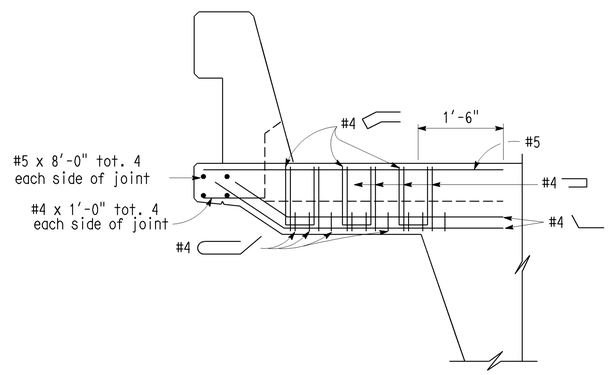

SECTION B-B

¾" = 1'-0"

Reinf. shown is in addition to slab reinf.

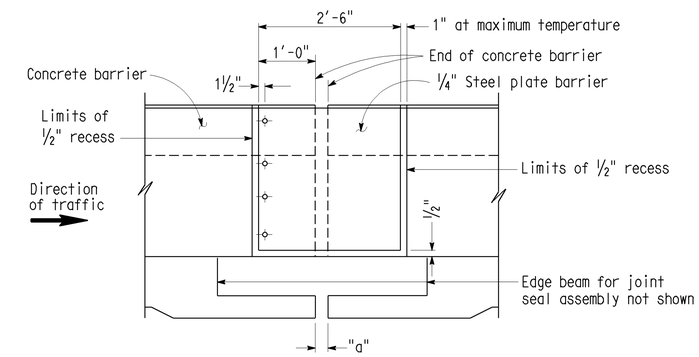

ELEVATION A-A

¾" = 1'-0"

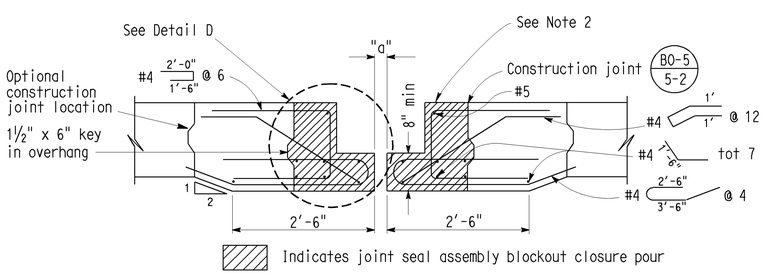

SECTION C-C

¾" = 1'-0"

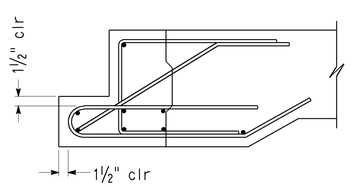

DETAIL D

1" = 1'-0"

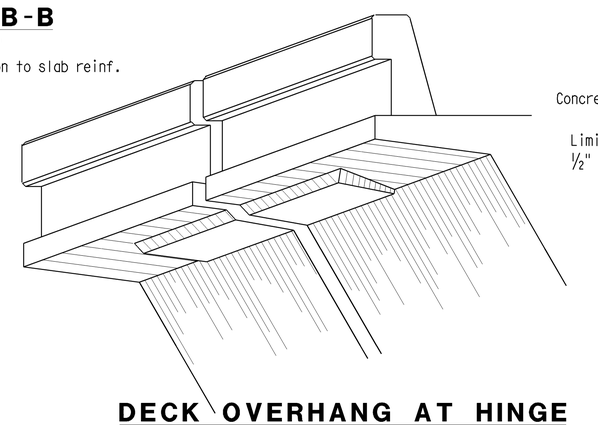

DECK OVERHANG AT HINGE

No Scale

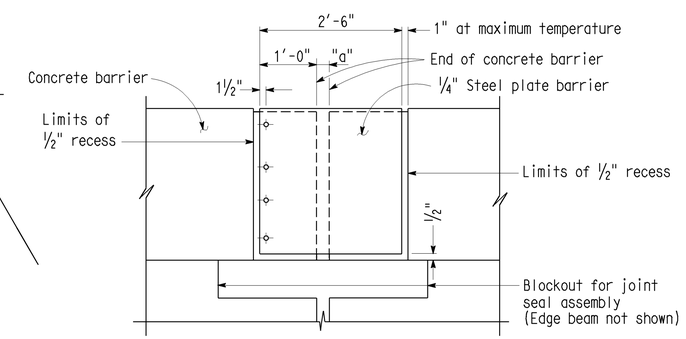

ELEVATION E-E

¾" = 1'-0"

Sudhakar Vatti
DESIGN OVERSIGHT Sudhakar Vatti
8-10-09
SIGN OFF DATE

	BY	CHECKED
DESIGN	P. Morel	J. Holombo/S. Megally
DETAILS	N. Shu	J. Holombo
QUANTITIES	V. Nong	L. Khaleghi

PREPARED FOR THE STATE OF CALIFORNIA DEPARTMENT OF TRANSPORTATION

Alaedin Moubayed
PROJECT ENGINEER

BRIDGE NO. 55-1098E
POST MILE 24.02

405/605 HOV CONNECTOR

JOINT SEAL - HINGE DETAILS MOVEMENT RATING GREATER THAN 4"

DESIGN DETAIL SHEET (ENGLISH) (REV. 2/25/05)

ORIGINAL SCALE IN INCHES FOR REDUCED PLANS 0 1 2 3

CU 12235
EA 071631

DISREGARD PRINTS BEARING EARLIER REVISION DATES

REVISION DATES (PRELIMINARY STAGE ONLY) 02/08/08 06/02/08 09/29/08 10/15/08 03/26/09 04/06/09 07/27/09

SHEET 57 OF 87

FILE => 55-1098e-q-joint01.dgn

USERNAME => friehard DATE PLOTTED => 03-FEB-2010 TIME PLOTTED => 07:58

DIST	COUNTY	ROUTE	POST MILES TOTAL PROJECT	SHEET No	TOTAL SHEETS
12	Ora	22,405, 605	R0.3/R0.9, 22.3/24.0,3.0/R1.6	1629	1929

REGISTERED CIVIL ENGINEER — DATE 07-27-09

2-1-10
PLANS APPROVAL DATE

The State of California or its officers or agents shall not be responsible for the accuracy or completeness of electronic copies of this plan sheet.

REGISTERED PROFESSIONAL ENGINEER — Paul A. Morel — No. C 68491 — Exp. 9-30-09 — CIVIL — STATE OF CALIFORNIA

OCTA
550 SOUTH MAIN STREET
ORANGE, CA 92863

PBS&J
625 THE CITY DRIVE SOUTH, SUITE 200
ORANGE, CA 92868

NOTES

1. For details not shown, see Bridge Plans
2. Coordinate blockout dimensions with joint seal assembly manufacturer

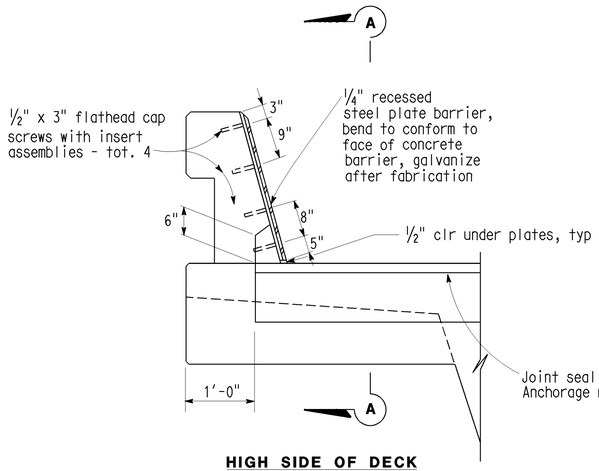

HIGH SIDE OF DECK

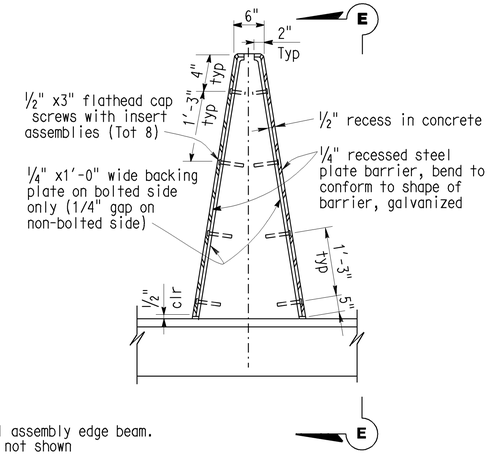

SEAL INSTALLATION

¾" = 1'-0"

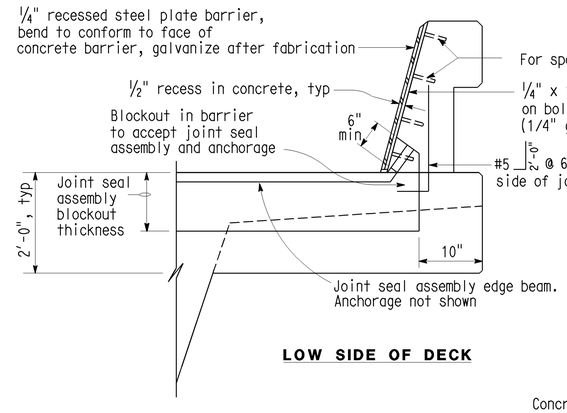

LOW SIDE OF DECK

JOINT INFORMATION		"a" DIMENSIONS			
LOCATION	MOVEMENT RATING (M.R.)	SKEW	WINTER	SPRING & FALL	SUMMER
Abutment 1	5½"	0	2½"	1⅞"	1¼"
Abutment 16	6"	0	2⅝"	2"	1⅜"

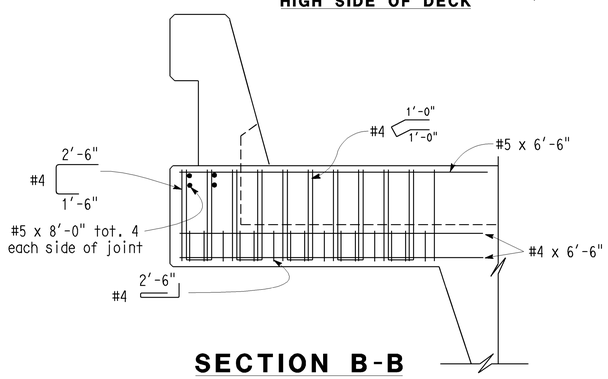

SECTION B-B

¾" = 1'-0"

Reinf. shown is in addition to slab reinf.

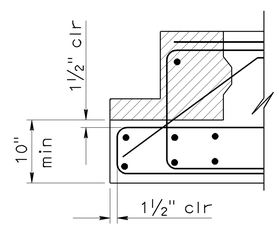

Note: See Section C-C for information not shown

DETAIL D

1 " = 1'-0"

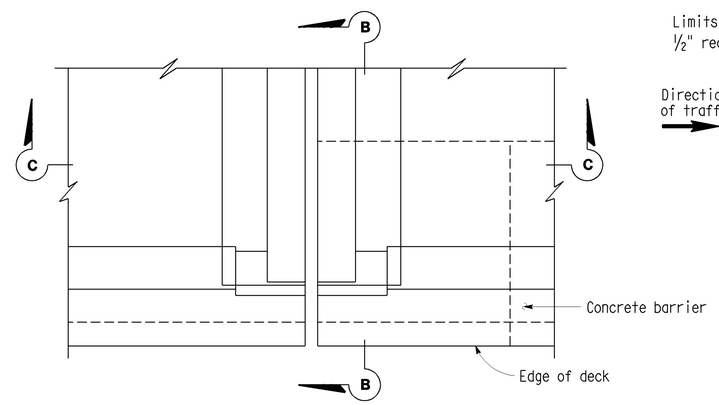

PLAN - DECK JOINT

¾" = 1'-0"

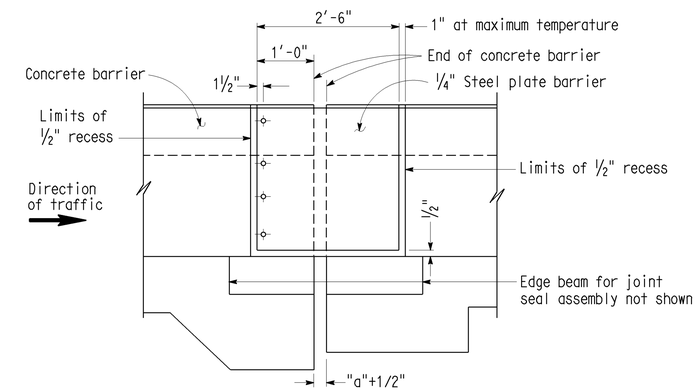

ELEVATION A-A

¾" = 1'-0"

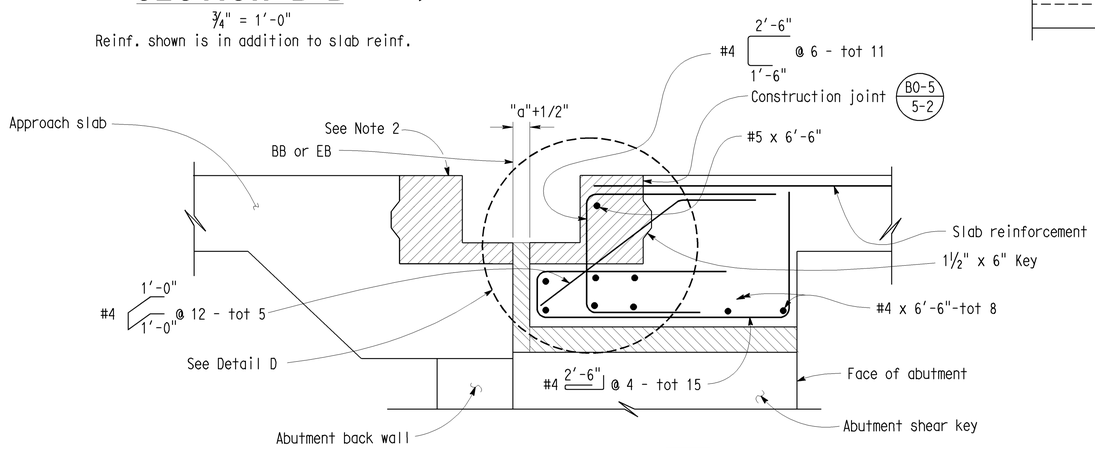

SECTION C-C

1 " = 1'-0"

Indicates joint seal assembly blockout closure pour

Indicates expanded polystyrene

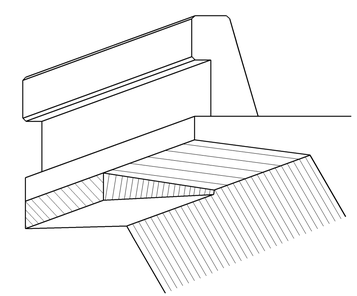

DECK OVERHANG AT ABUTMENT

No Scale

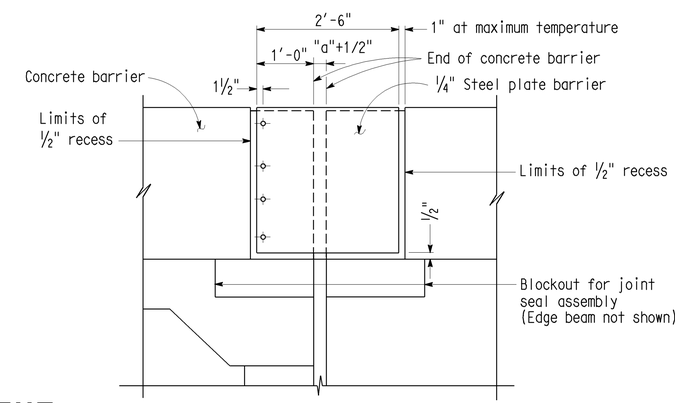

ELEVATION E-E

¾" = 1'-0"

Sudhakar Vatti
DESIGN OVERSIGHT — Sudhakar Vatti

8-10-09
SIGN OFF DATE

	BY	CHECKED
DESIGN	P. Morel	J. Holombo/S. Megally
DETAILS	N. Shu	J. Holombo
QUANTITIES	V. Nong	L. Khaleghi

PREPARED FOR THE STATE OF CALIFORNIA DEPARTMENT OF TRANSPORTATION

Alaedin Moubayed
PROJECT ENGINEER

BRIDGE NO. 55-1098E
POST MILE 24.02

405/605 HOV CONNECTOR

JOINT SEAL - ABUTMENT DETAILS MOVEMENT RATING GREATER THAN 4"

DESIGN DETAIL SHEET (ENGLISH) (REV. 2/25/05)

ORIGINAL SCALE IN INCHES FOR REDUCED PLANS 0 1 2 3

CU 12235
EA 071631

DISREGARD PRINTS BEARING EARLIER REVISION DATES — REVISION DATES (PRELIMINARY STAGE ONLY) 02/14/08 03/07/08 09/29/08 10/15/08 03/26/09 04/06/09 07/27/09

SHEET 58 OF 87

FILE => 55-1098e-q-joint02.dgn

USERNAME => trlenard DATE PLOTTED => 03-FEB-2010 TIME PLOTTED => 07:58

DIST	COUNTY	ROUTE	POST MILES TOTAL PROJECT	SHEET No	TOTAL SHEETS
12	Ora	22,405, 605	R0.3/R0.9, 22.3/24.0,3.0/R1.6	1630	1929

REGISTERED CIVIL ENGINEER — DATE 07-27-09

2-1-10
PLANS APPROVAL DATE

REGISTERED PROFESSIONAL ENGINEER — Paul A. Morel — No. C 68491 — Exp. 9-30-09 — CIVIL — STATE OF CALIFORNIA

The State of California or its officers or agents shall not be responsible for the accuracy or completeness of electronic copies of this plan sheet.

OCTA
550 SOUTH MAIN STREET
ORANGE, CA 92863

PBS&J
625 THE CITY DRIVE SOUTH, SUITE 200
ORANGE, CA 92868

NOTES

1. See " Bent Details No. 3" sheet for drain pipe outlet locations.
2. See "Deck Drainage Details" sheet for details.

LEGEND

Denotes Deck Drain

Denotes direction of flow

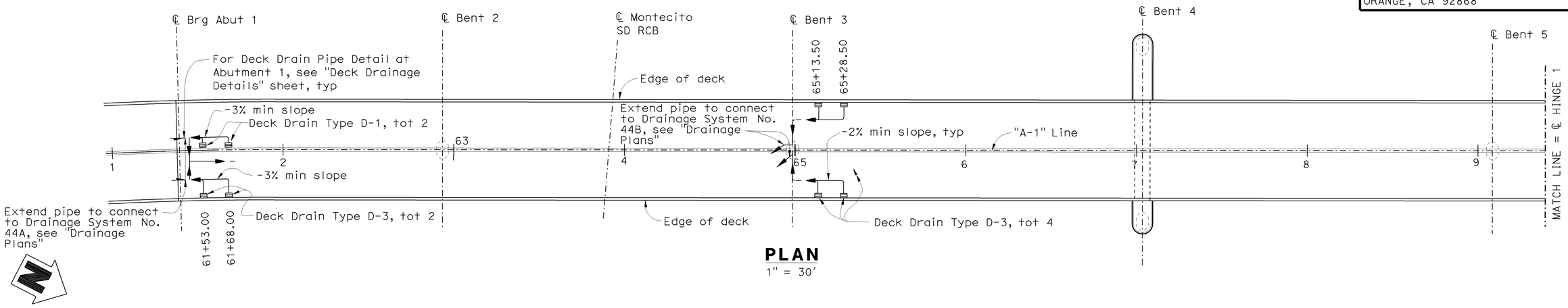

PLAN
1" = 30'

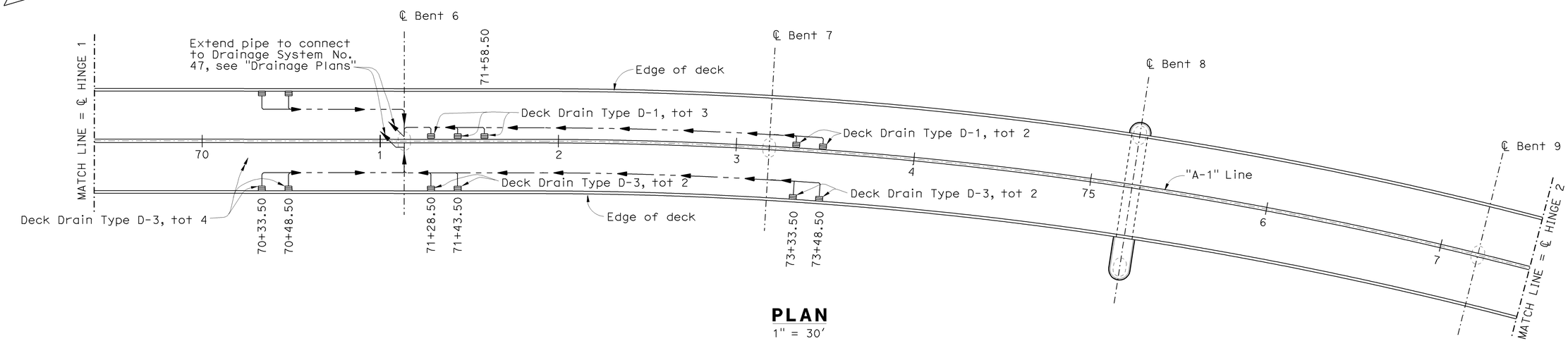

PLAN
1" = 30'

Sudhakar Vatti
DESIGN OVERSIGHT — Sudhakar Vatti
8-10-09
SIGN OFF DATE

	BY	CHECKED
DESIGN	P. Morel	J. Holombo/S. Megally
DETAILS	N. Shu	J. Holombo
QUANTITIES	V. Nong	L. Khaleghi

PREPARED FOR THE STATE OF CALIFORNIA DEPARTMENT OF TRANSPORTATION

Alaedin Moubayed
PROJECT ENGINEER

BRIDGE NO. 55-1098E
POST MILE 24.02

405/605 HOV CONNECTOR
DECK DRAINAGE LAYOUT NO. 1

DESIGN DETAIL SHEET (ENGLISH) (REV. 2/25/05)

ORIGINAL SCALE IN INCHES FOR REDUCED PLANS 0 1 2 3

CU 12235
EA 071631

DISREGARD PRINTS BEARING EARLIER REVISION DATES

REVISION DATES (PRELIMINARY STAGE ONLY): 02/18/08 06/02/08 09/29/08 10/13/08 03/20/09 04/06/09 07/27/09

SHEET 59 OF 87

FILE => 55-1098e-r-dd01.dgn

USERNAME => trlenard DATE PLOTTED => 03-FEB-2010 TIME PLOTTED => 07:58

DIST	COUNTY	ROUTE	POST MILES TOTAL PROJECT	SHEET No	TOTAL SHEETS
12	Ora	22,405, 605	R0.3/R0.9, 22.3/24.0,3.0/R1.6	1631	1929

REGISTERED CIVIL ENGINEER 07-27-09 DATE

2-1-10
PLANS APPROVAL DATE

REGISTERED PROFESSIONAL ENGINEER Paul A. Morel No. C 68491 Exp. 9-30-09 CIVIL STATE OF CALIFORNIA

The State of California or its officers or agents shall not be responsible for the accuracy or completeness of electronic copies of this plan sheet.

OCTA
550 SOUTH MAIN STREET
ORANGE, CA 92863

PBS&J
625 THE CITY DRIVE SOUTH, SUITE 200
ORANGE, CA 92868

NOTES

1. See " Bent Details No. 3" sheet for drain pipe outlet locations.
2. See "Deck Drainage Details" sheet for details.

LEGEND

Denotes Deck Drain

Denotes direction of flow

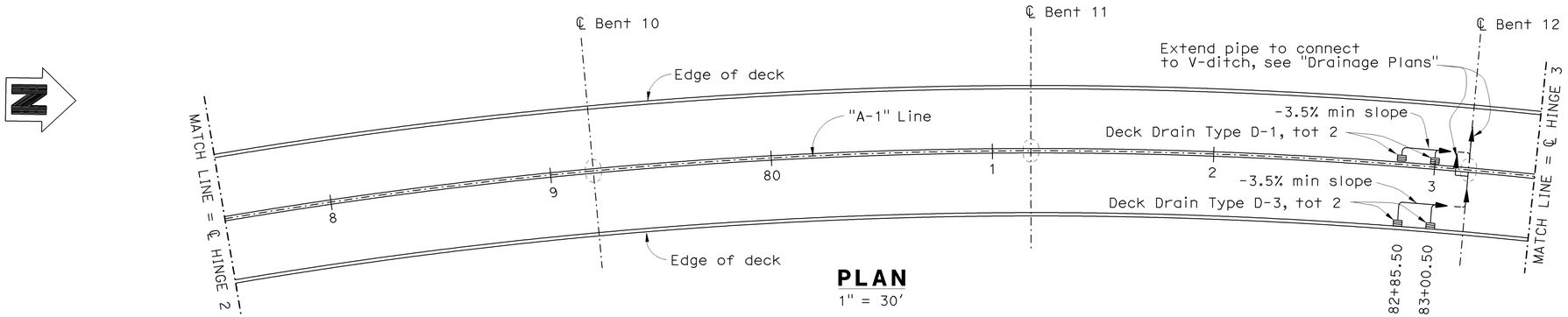

PLAN
1" = 30'

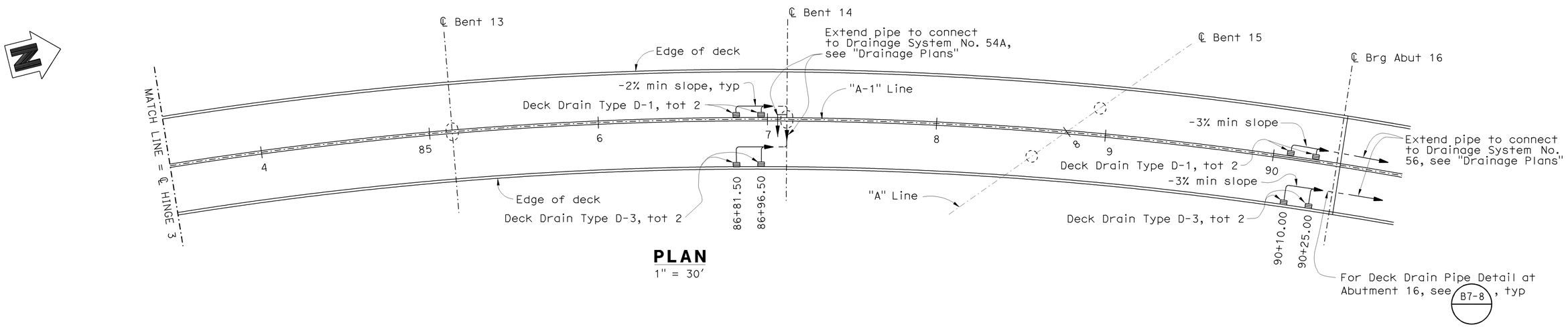

PLAN
1" = 30'

Sudhakar Vatti
DESIGN OVERSIGHT Sudhakar Vatti
8-10-09
SIGN OFF DATE

	BY	CHECKED
DESIGN	P. Morel	J. Holombo/S. Megally
DETAILS	N. Shu	J. Holombo
QUANTITIES	V. Nong	L. Khaleghi

PREPARED FOR THE STATE OF CALIFORNIA DEPARTMENT OF TRANSPORTATION

Alaedin Moubayed
PROJECT ENGINEER

BRIDGE NO. 55-1098E
POST MILE 24.02

405/605 HOV CONNECTOR
DECK DRAINAGE LAYOUT NO. 2

DESIGN DETAIL SHEET (ENGLISH) (REV. 2/25/05)

ORIGINAL SCALE IN INCHES FOR REDUCED PLANS 0 1 2 3

CU 12235
EA 071631

DISREGARD PRINTS BEARING EARLIER REVISION DATES

REVISION DATES (PRELIMINARY STAGE ONLY) 02/18/08 06/02/08 09/29/08 10/13/08 03/26/09 04/06/09 07/27/09

SHEET 60 OF 87

FILE => 55-1098e-r-dd02.dgn

USERNAME => friehard DATE PLOTTED => 03-FEB-2010 TIME PLOTTED => 08:03

DIST	COUNTY	ROUTE	POST MILES TOTAL PROJECT	SHEET No	TOTAL SHEETS
12	Ora	22,405, 605	R0.3/R0.9, 22.3/24.0,3.0/R1.6	1632	1929

REGISTERED CIVIL ENGINEER — DATE 07-27-09

2-1-10
PLANS APPROVAL DATE

REGISTERED PROFESSIONAL ENGINEER — Paul A. Morel No. C 68491 Exp. 9-30-09 CIVIL — STATE OF CALIFORNIA

The State of California or its officers or agents shall not be responsible for the accuracy or completeness of electronic copies of this plan sheet.

OCTA
550 SOUTH MAIN STREET
ORANGE, CA 92863

PBS&J
625 THE CITY DRIVE SOUTH, SUITE 200
ORANGE, CA 92868

NOTES

1. For Deck Drain Type D-3 details, see B7-7
2. For Deck Drain Type D-1 details, see B7-6
3. Provide 6" min clearance to prestressing ducts.

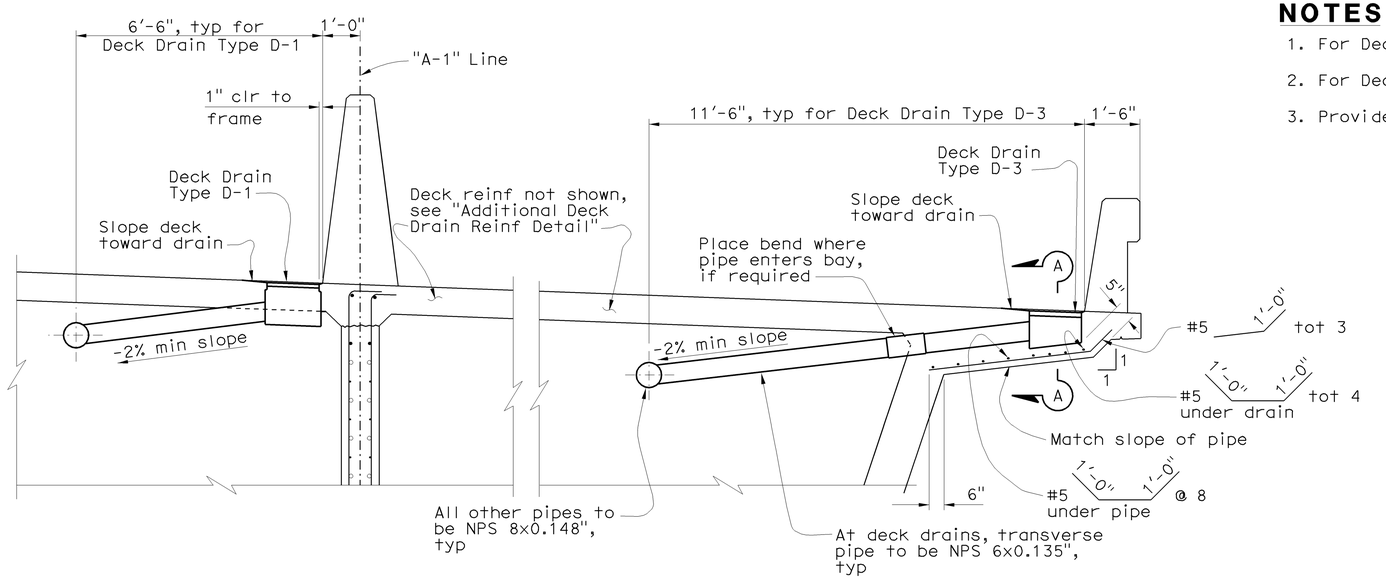

SECTION AT DECK DRAIN

No Scale

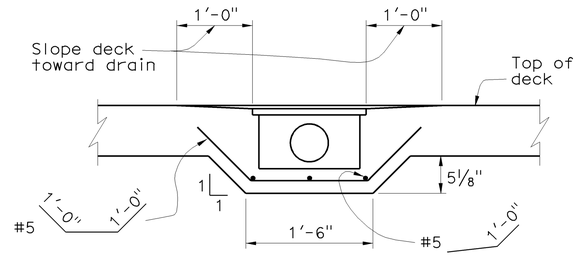

SECTION A-A

No Scale

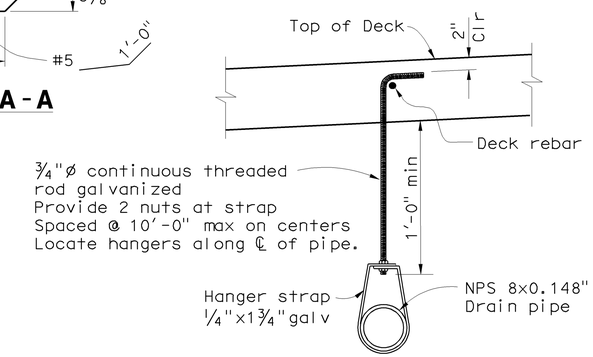

PIPE HANGER DETAIL

No Scale

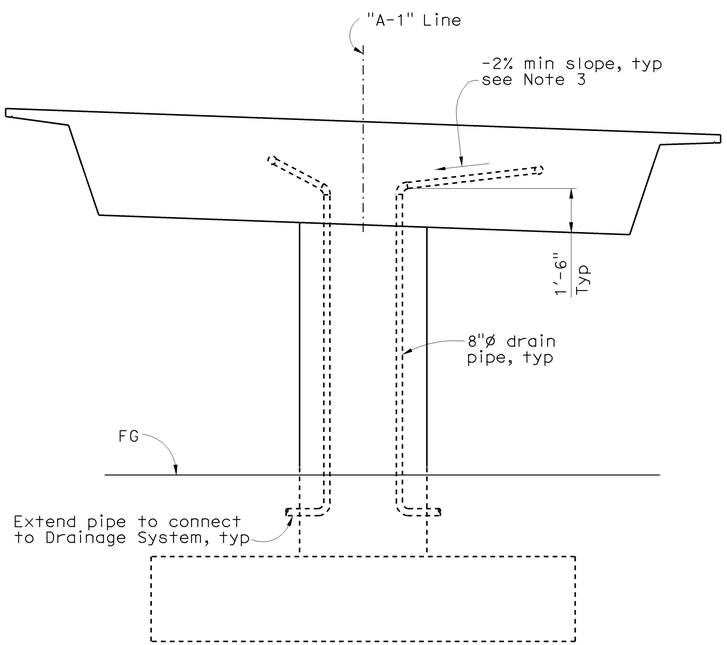

SECTION AT BENT CAP

No Scale

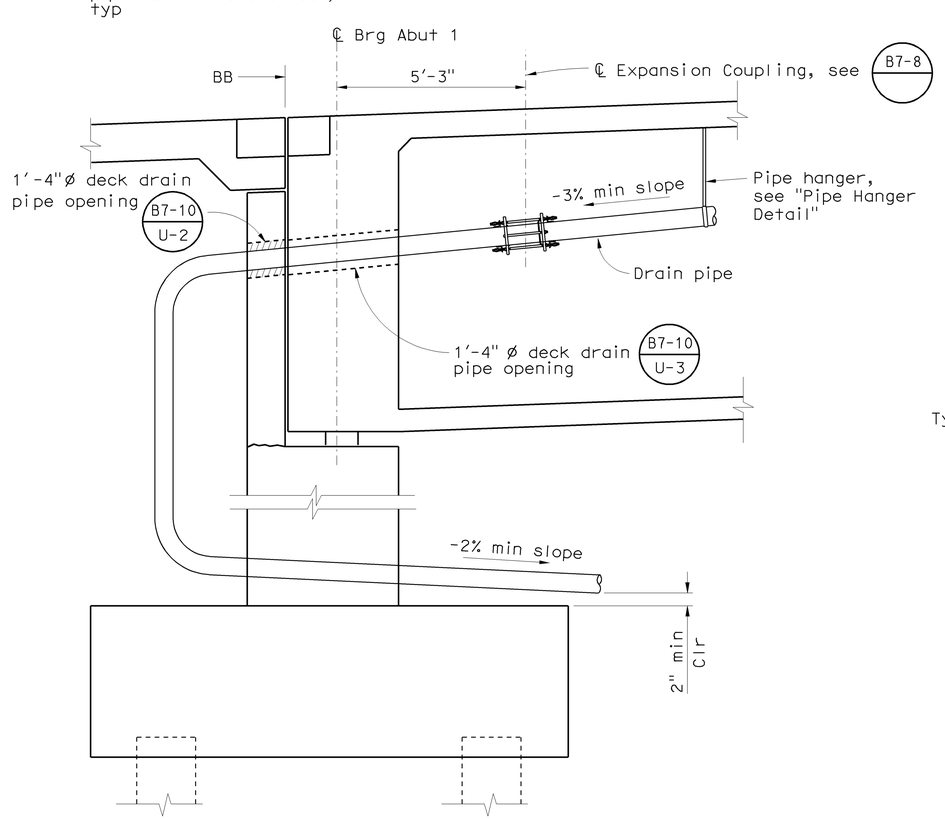

DECK DRAIN PIPE DETAIL AT ABUTMENT 1

No Scale

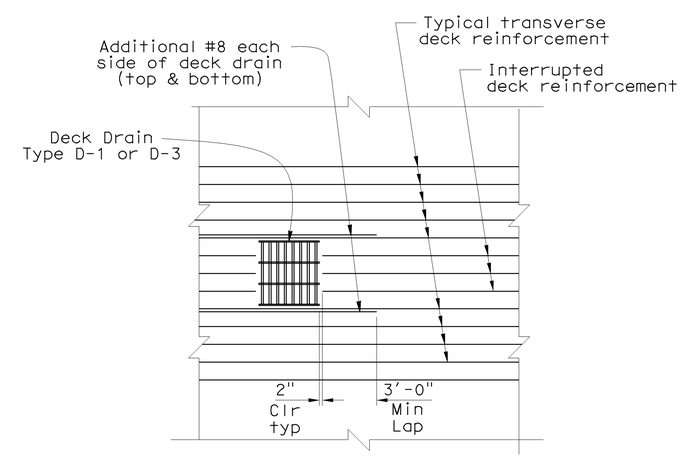

Note: Adjust longit deck reinf (not shown) as necessary to clear deck drains.

ADDITIONAL DECK DRAIN REINF DETAIL

No Scale

Sudhakar Vatti
DESIGN OVERSIGHT Sudhakar Vatti
8-10-09
SIGN OFF DATE

	BY	CHECKED
DESIGN	P. Morel	J. Holombo/S. Megally
DETAILS	N. Shu	J. Holombo
QUANTITIES	V. Nong	L. Khaleghi

PREPARED FOR THE STATE OF CALIFORNIA DEPARTMENT OF TRANSPORTATION

Alaedin Moubayed
PROJECT ENGINEER

BRIDGE NO. 55-1098E
POST MILE 24.02

405/605 HOV CONNECTOR
DECK DRAINAGE DETAILS

DESIGN DETAIL SHEET (ENGLISH) (REV. 2/25/05)

ORIGINAL SCALE IN INCHES FOR REDUCED PLANS 0 1 2 3

CU 12235
EA 071631

DISREGARD PRINTS BEARING EARLIER REVISION DATES

REVISION DATES (PRELIMINARY STAGE ONLY) 02/18/08 06/20/08 09/29/08 10/13/08 03/20/09 04/08/09 07/27/09

SHEET 61 OF 87

FILE => 55-1098e-r-dd03.dgn

USERNAME => trlenard DATE PLOTTED => 03-FEB-2010 TIME PLOTTED => 08:09

DIST	COUNTY	ROUTE	POST MILES TOTAL PROJECT	SHEET No	TOTAL SHEETS
12	Ora	22,405, 605	R0.3/R0.9, 22.3/24.0,3.0/R1.6	1633	1929

REGISTERED CIVIL ENGINEER — DATE 07-27-09

2-1-10
PLANS APPROVAL DATE

REGISTERED PROFESSIONAL ENGINEER — Paul A. Morel No. C 68491 Exp. 9-30-09 CIVIL — STATE OF CALIFORNIA

The State of California or its officers or agents shall not be responsible for the accuracy or completeness of electronic copies of this plan sheet.

OCTA
550 SOUTH MAIN STREET
ORANGE, CA 92863

PBS&J
625 THE CITY DRIVE SOUTH, SUITE 200
ORANGE, CA 92868

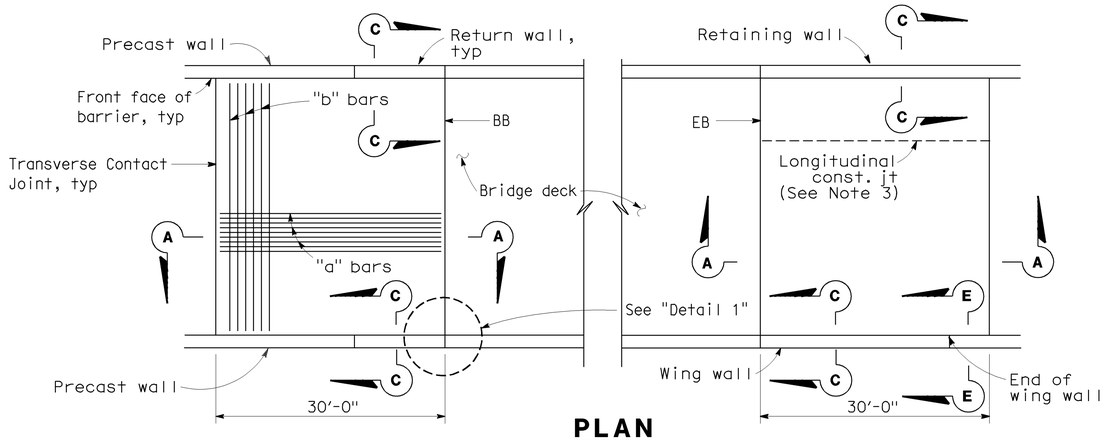

PLAN
No Scale

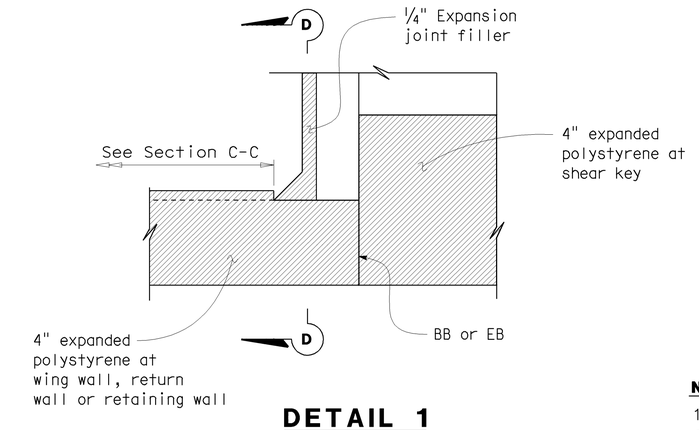

DETAIL 1
No Scale

NOTES:

1. For details not shown,see "Bridge Plans".
2. For drainage details,see "Structure Approach Drainage Details" sheet.
3. Longitudinal construction joint, when permitted by the Engineer, shall be located on lane lines
4. For transverse contact joint with new PCC paving, refer to Standard Plan P10.
5. Spacing of transverse reinforcement is measured along ℄ roadway.

Expanded polystyrene
Remove outer 6" after construction

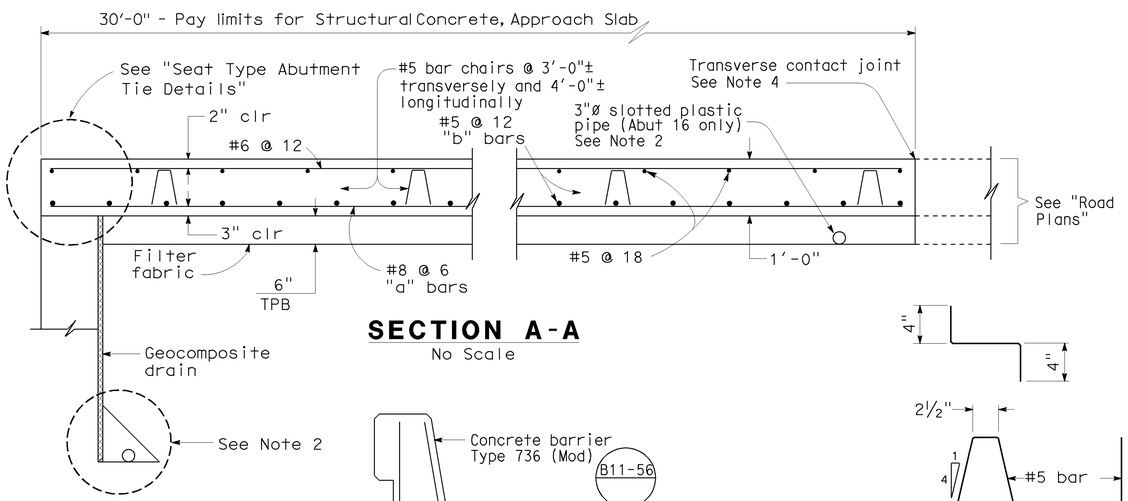

SECTION A-A
No Scale

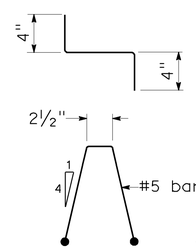

BAR CHAIR DETAIL
No Scale

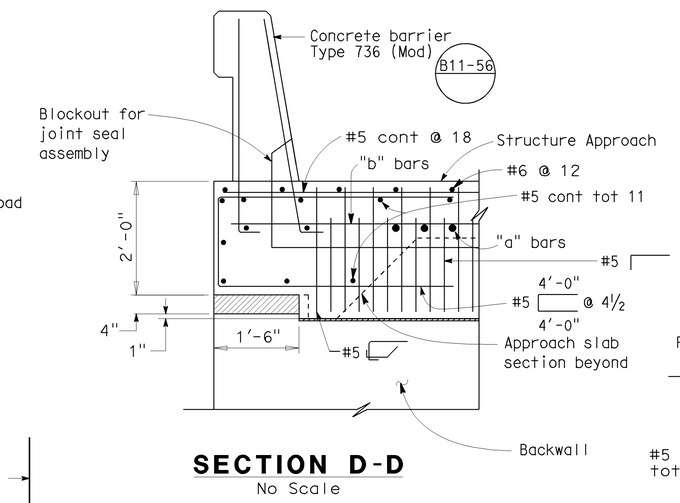

SECTION D-D
No Scale

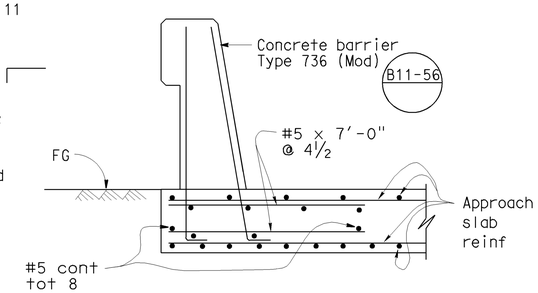

SECTION E-E
No Scale

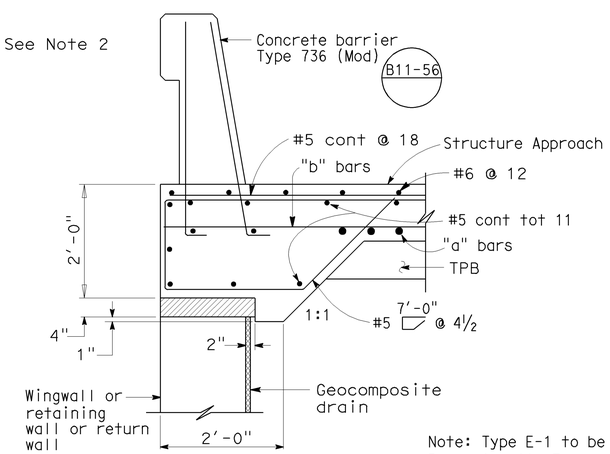

TYPE E-1

SECTION C-C
No Scale

Note: Type E-1 to be used, except at Precast wall. For section at Precast wall, see "Structure Plans" for RW No. 456 and 457

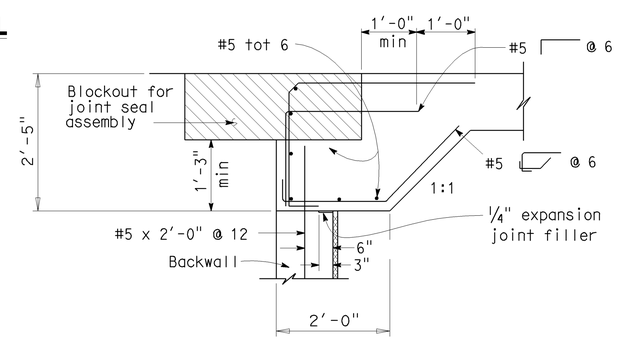

SEAT TYPE ABUTMENT TIE DETAILS (SEE NOTE 1)
No Scale

Sudhakar Vatti
DESIGN OVERSIGHT — Sudhakar Vatti
8-10-09
SIGN OFF DATE

	BY	CHECKED
DESIGN	P. Morel	J. Holombo/S. Megally
DETAILS	N. Shu	J. Holombo
QUANTITIES	V. Nong	L. Khaleghi

PREPARED FOR THE STATE OF CALIFORNIA DEPARTMENT OF TRANSPORTATION

Alaedin Moubayed
PROJECT ENGINEER

BRIDGE NO. 55-1098E
POST MILE 24.02

405/605 HOV CONNECTOR
STRUCTURE APPROACH TYPE N(30S)

DESIGN DETAIL SHEET (ENGLISH) (REV. 2/25/05)

ORIGINAL SCALE IN INCHES FOR REDUCED PLANS 0 1 2 3

CU 12235
EA 071631

DISREGARD PRINTS BEARING EARLIER REVISION DATES

REVISION DATES (PRELIMINARY STAGE ONLY): 02/12/08 06/02/08 09/29/08 10/13/08 03/20/09 04/06/09 07/27/09

SHEET 62 OF 87

FILE => 55-1098e-s-sa01.dgn

USERNAME => trlemard DATE PLOTTED => 03-FEB-2010 TIME PLOTTED => 08:09

DIST	COUNTY	ROUTE	POST MILES TOTAL PROJECT	SHEET No	TOTAL SHEETS
12	Ora	22,405, 605	R0.3/R0.9, 22.3/24.0,3.0/R1.6	1634	1929

REGISTERED CIVIL ENGINEER — DATE 07-27-09

2-1-10
PLANS APPROVAL DATE

The State of California or its officers or agents shall not be responsible for the accuracy or completeness of electronic copies of this plan sheet.

REGISTERED PROFESSIONAL ENGINEER — Paul A. Morel — No. C 68491 — Exp. 9-30-09 — CIVIL — STATE OF CALIFORNIA

OCTA
550 SOUTH MAIN STREET
ORANGE, CA 92863

PBS&J
625 THE CITY DRIVE SOUTH, SUITE 200
ORANGE, CA 92868

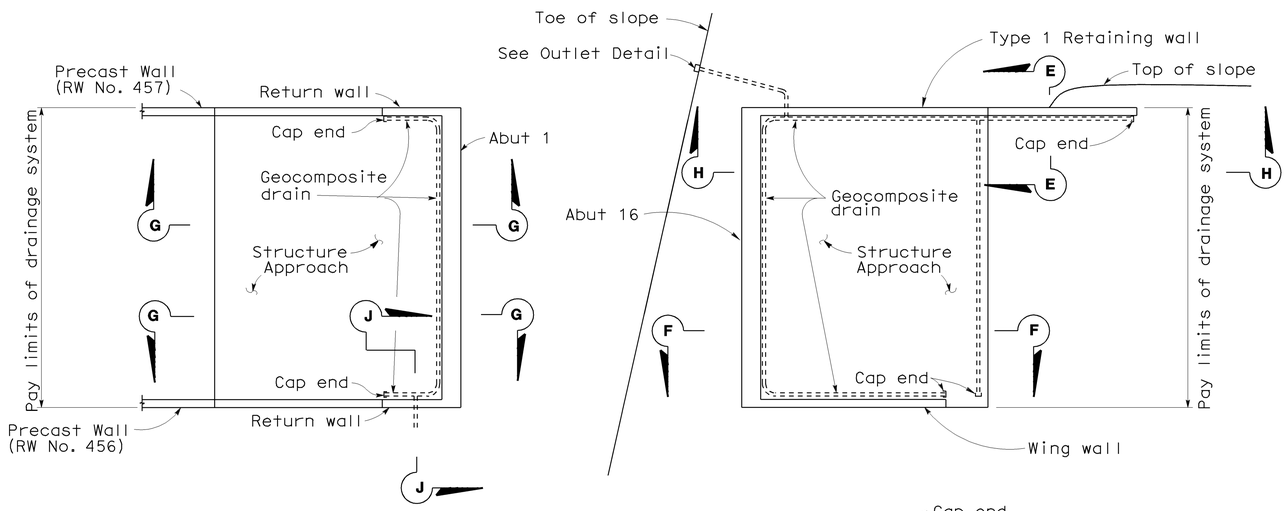

PLAN
No Scale

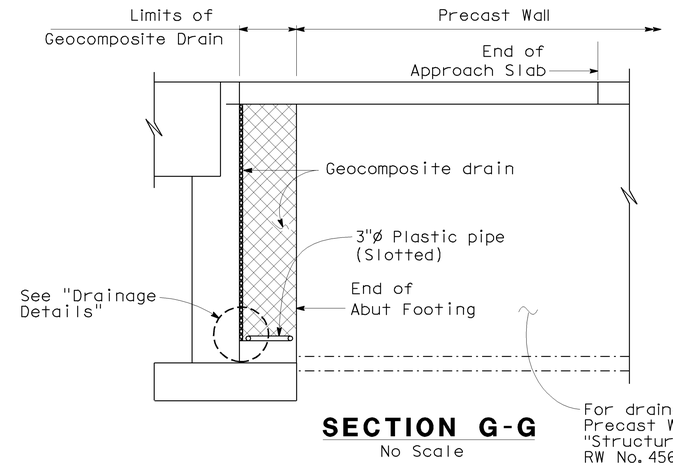

SECTION G-G
No Scale

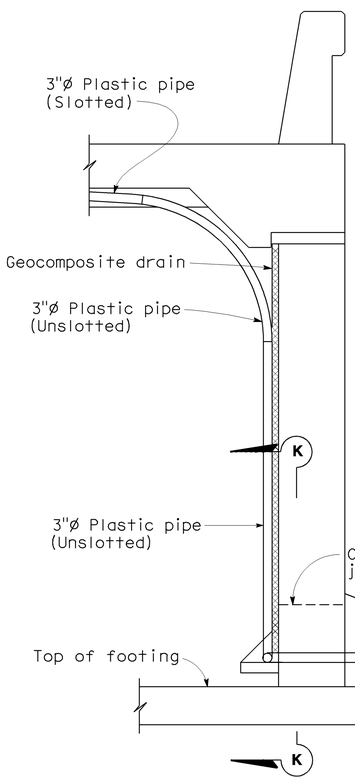

SECTION E-E
No Scale

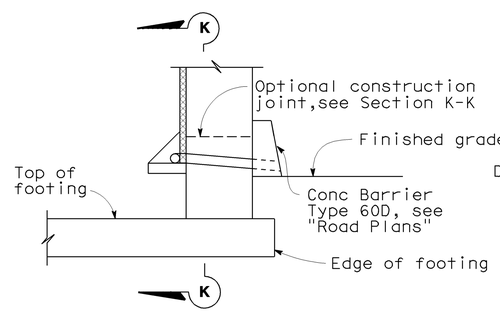

SECTION J-J
No Scale

NOTE: Bends and junctions in 3"ø plastic pipe are 2'-6" radius min.

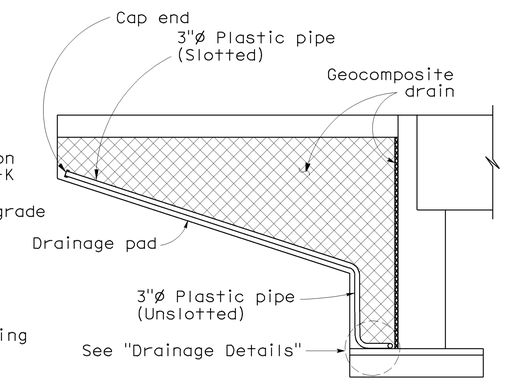

CANTILEVER WINGWALL
SECTION F-F
No Scale

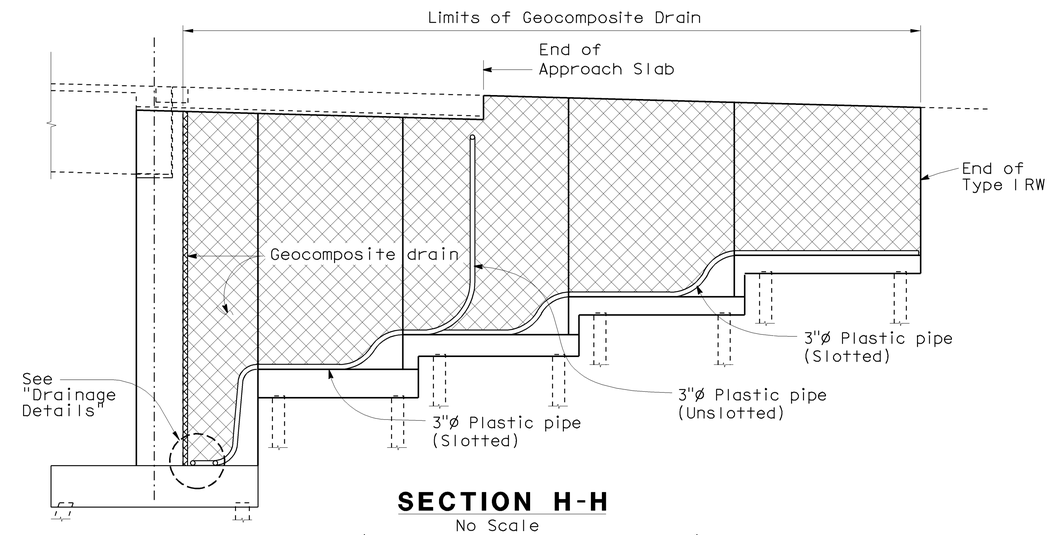

SECTION H-H
No Scale

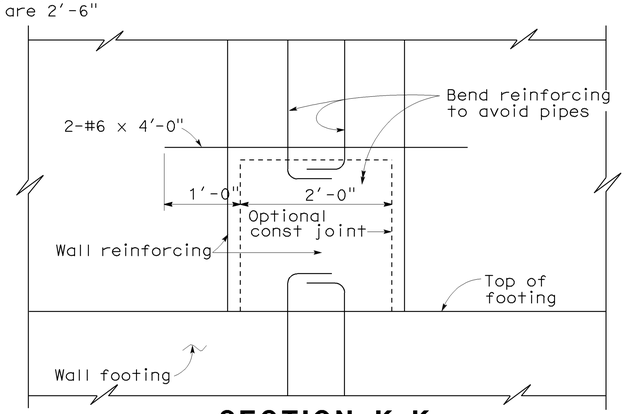

SECTION K-K
No Scale

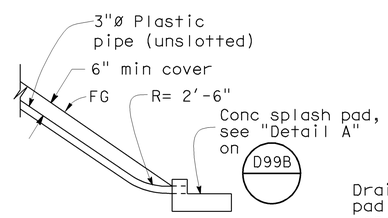

OUTLET DETAIL
No Scale

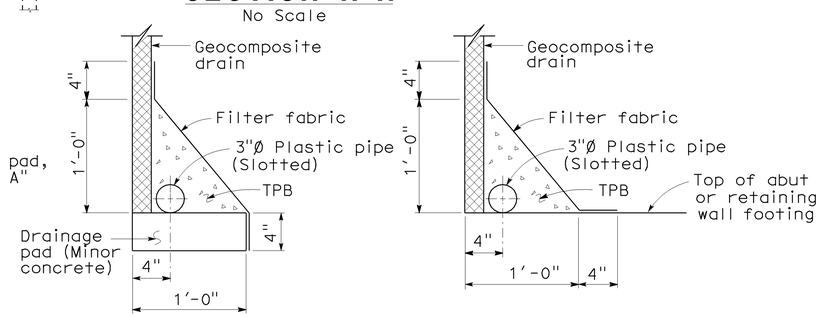

WITHOUT FOOTING — WITH FOOTING

DRAINAGE DETAILS
No Scale

Sudhakar Vatti
DESIGN OVERSIGHT — Sudhakar Vatti
8-10-09
SIGN OFF DATE

	BY	CHECKED
DESIGN	P. Morel	J. Holombo/S. Megally
DETAILS	N. Shu	J. Holombo
QUANTITIES	V. Nong	L. Khaleghi

PREPARED FOR THE STATE OF CALIFORNIA DEPARTMENT OF TRANSPORTATION

Alaedin Moubayed
PROJECT ENGINEER

BRIDGE NO. 55-1098E
POST MILE 24.02

405/605 HOV CONNECTOR
STRUCTURE APPROACH DRAINAGE DETAILS

DESIGN DETAIL SHEET (ENGLISH) (REV. 2/25/05)

ORIGINAL SCALE IN INCHES FOR REDUCED PLANS 0 1 2 3

CU 12235
EA 071631

DISREGARD PRINTS BEARING EARLIER REVISION DATES

REVISION DATES (PRELIMINARY STAGE ONLY) 02/18/08 06/02/08 09/29/08 10/15/08 03/28/09 04/06/09 07/27/09

SHEET 63 OF 87

FILE => 55-1098e-s-sadd.dgn

USERNAME => friehard DATE PLOTTED => 03-FEB-2010 TIME PLOTTED => 08:09

DIST	COUNTY	ROUTE	POST MILES TOTAL PROJECT	SHEET No	TOTAL SHEETS
12	Ora	22,405, 605	R0.3/R0.9, 22.3/24.0,3.0/R1.6	1635	1929

REGISTERED CIVIL ENGINEER — DATE 07-27-09

2-1-10
PLANS APPROVAL DATE

REGISTERED PROFESSIONAL ENGINEER — Paul A. Morel — No. C 68491 — Exp. 9-30-09 — CIVIL — STATE OF CALIFORNIA

The State of California or its officers or agents shall not be responsible for the accuracy or completeness of electronic copies of this plan sheet.

OCTA
550 SOUTH MAIN STREET
ORANGE, CA 92863

PBS&J
625 THE CITY DRIVE SOUTH, SUITE 200
ORANGE, CA 92868

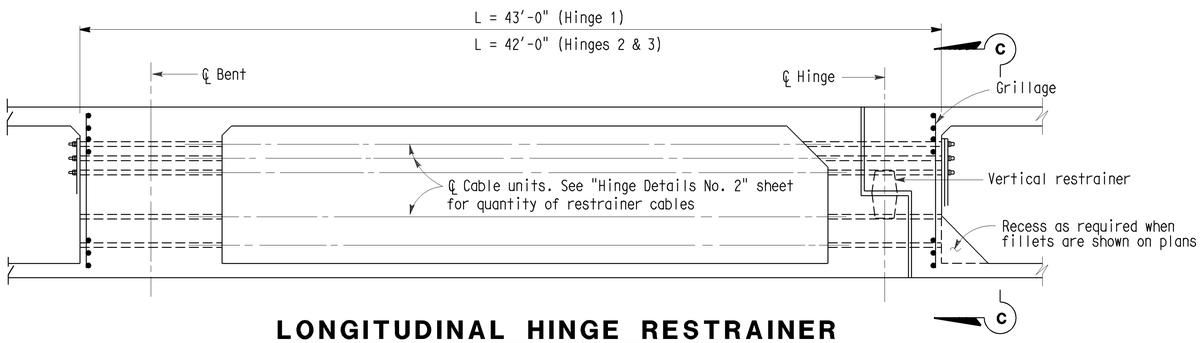

LONGITUDINAL HINGE RESTRAINER

No Scale

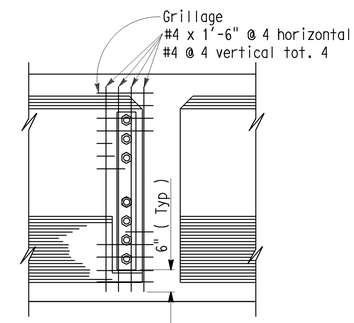

SECTION C-C

No Scale

Note: Slope to match sloping exterior girders.

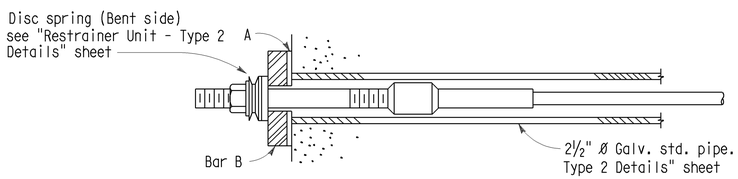

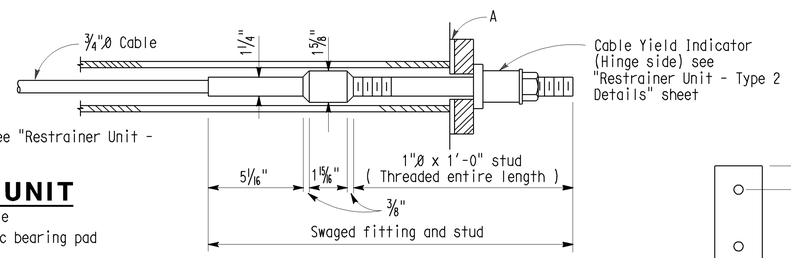

CABLE UNIT

No Scale

A = ¼" elastomeric bearing pad

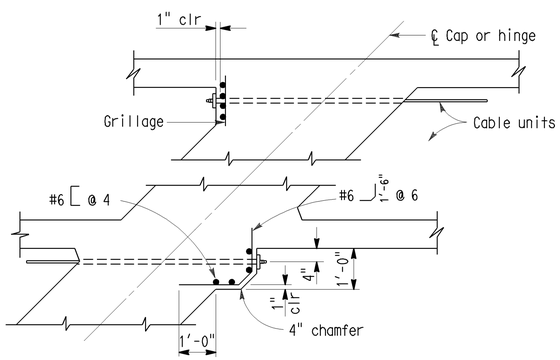

END ANCHORAGE DETAILS AT HINGE OR CAP PART PLAN

No Scale

NOTES:

Restrainer units to be on tangent alignment.

Anchor nuts shall not be set until 30 days following completion of prestressing for CIP prestressed bridges.

See "Hinge Details No. 2" sheet for location and number of longitudinal and vertical hinge restrainers. See "Joint Seal-Hinge Details MR>4"" sheet for table of joint openings.

Contractor may install restrainers in horizontal arrangement with approval of the Engineer. The location shall be in the middle 1/3 depth of the structure.

An alternative is to place restrainers in two horizontal layers, equally located above and below the mid structure depth. The number of restrainers in each layer shall not differ by more than one.

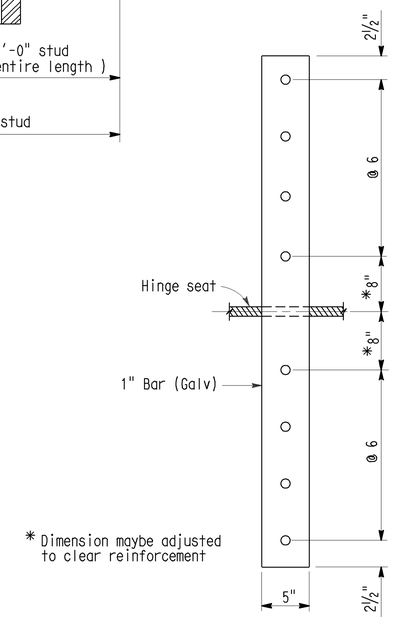

DETAIL - BAR B

No Scale

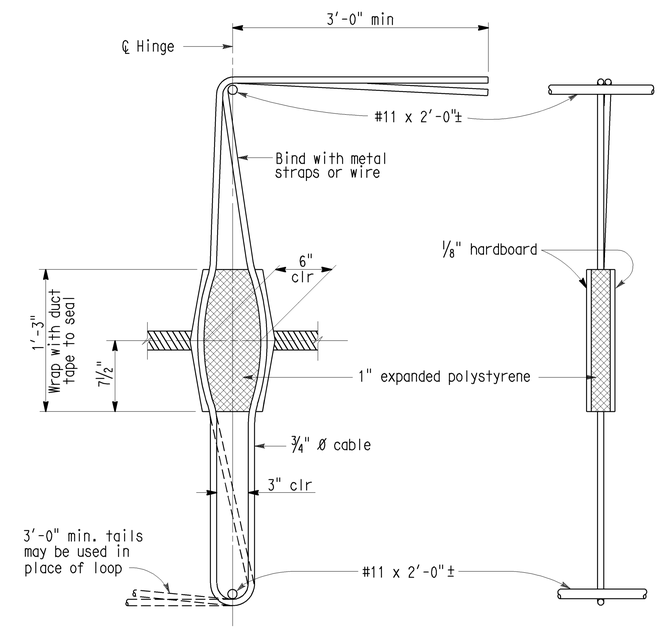

VERTICAL RESTRAINER

No Scale

Sudhakar Vatti
DESIGN OVERSIGHT — Sudhakar Vatti
8-10-09
SIGN OFF DATE

	BY	CHECKED
DESIGN	P. Morel	J. Holombo/S. Megally
DETAILS	N. Shu	J. Holombo
QUANTITIES	V. Nong	L. Khaleghi

PREPARED FOR THE STATE OF CALIFORNIA DEPARTMENT OF TRANSPORTATION

Alaedin Moubayed
PROJECT ENGINEER

BRIDGE NO. 55-1098E
POST MILE 24.02

405/605 HOV CONNECTOR
RESTRAINER UNIT - TYPE 2

DESIGN DETAIL SHEET (ENGLISH) (REV. 2/25/05)

ORIGINAL SCALE IN INCHES FOR REDUCED PLANS 0 1 2 3

CU 12235
EA 071631

DISREGARD PRINTS BEARING EARLIER REVISION DATES

REVISION DATES (PRELIMINARY STAGE ONLY) 02/18/08 06/02/08 09/29/08 10/13/08 03/26/09 04/06/09 07/27/09

SHEET 64 OF 87

FILE => 55-1098e-t-resunit2.dgn

USERNAME => friehard DATE PLOTTED => 03-FEB-2010 TIME PLOTTED => 08:10

DIST	COUNTY	ROUTE	POST MILES TOTAL PROJECT	SHEET No	TOTAL SHEETS
12	Ora	22,405, 605	R0.3/R0.9, 22.3/24.0,3.0/R1.6	1636	1929

REGISTERED CIVIL ENGINEER 07-27-09 DATE

2-1-10
PLANS APPROVAL DATE

The State of California or its officers or agents shall not be responsible for the accuracy or completeness of electronic copies of this plan sheet.

REGISTERED PROFESSIONAL ENGINEER Paul A. Morel No. C 68491 Exp. 9-30-09 CIVIL STATE OF CALIFORNIA

OCTA
550 SOUTH MAIN STREET
ORANGE, CA 92863

PBS&J
625 THE CITY DRIVE SOUTH, SUITE 200
ORANGE, CA 92868

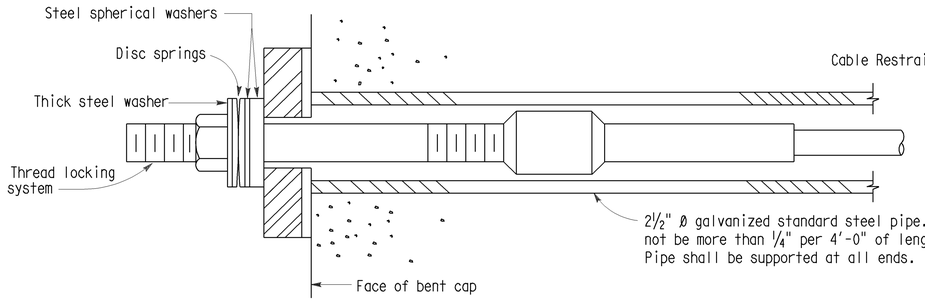

BENT SIDE

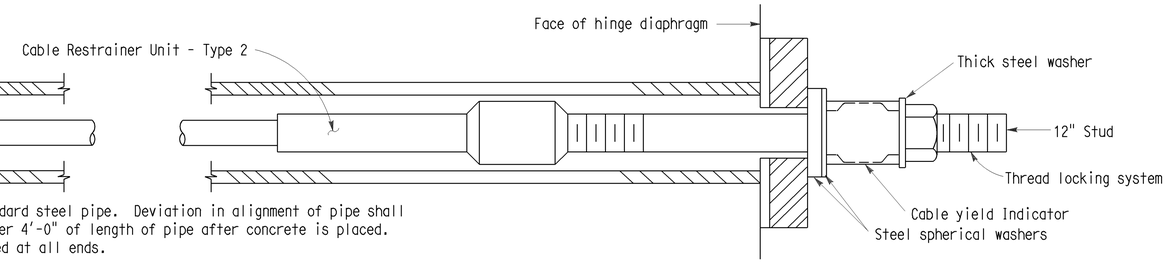

CABLE UNIT

No Scale

HINGE SIDE

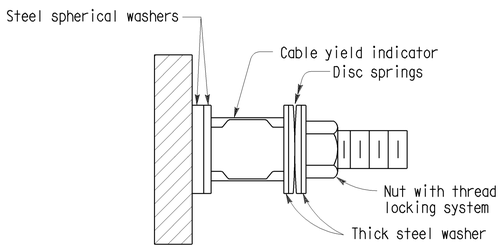

ADJUSTMENT END

No Scale

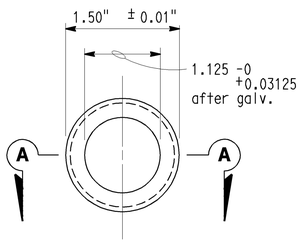

END VIEW

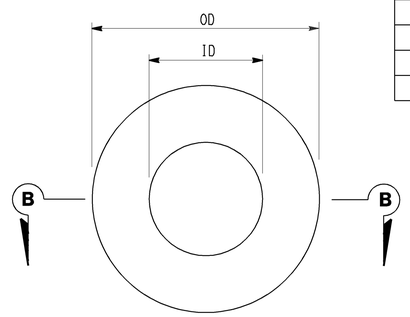

PLAN

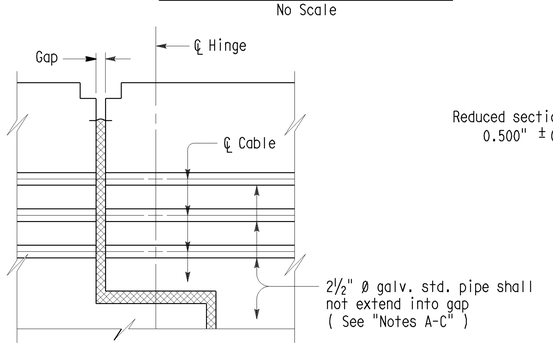

HINGE DETAIL

No Scale

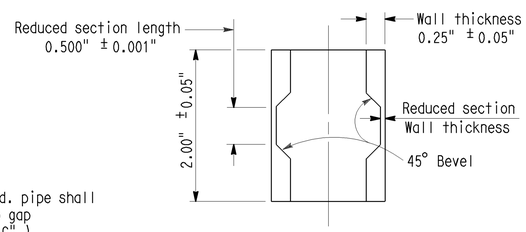

SECTION A-A

CABLE YIELD INDICATOR

No Scale

All dimensions are before galvanizing except as noted.

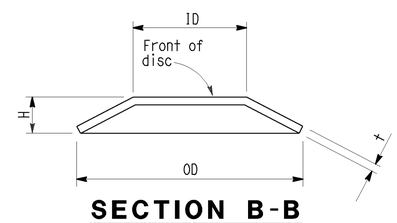

SECTION B-B

(Single spring)

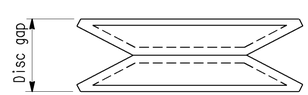

AS INSTALLED ON STUD

DISC SPRING

No Scale

Note: For dimensions not shown, see table

DISC SPRINGS AND WASHERS

"All dimensions in inches, except as noted"

	DISC SPRING					STEEL SPHERICAL WASHER			THICK WASHER		
L*	ID	OD	t	H	COLOR CODE	ID	OD	Nom thick.	ID	OD	t**
00.0 - 25.0	1.00	2.00	0.065	0.130	WHITE	1.19	2.25	0.50	1.03	2.00	0.25
25.1 - 31.9	1.00	2.00	0.084	0.136	RED	1.19	2.25	0.50	1.03	2.00	0.25
32.0 - 37.9	1.00	2.00	0.097	0.145	BLUE	1.19	2.25	0.50	1.03	2.00	0.25
38.0 - 45.0	1.25	2.50	0.120	0.180	YELLOW	1.31	2.50	0.50	1.16	2.25	0.25

*For length L (ft), see "Restrainer Unit - Type 2" sheet **Minimum value

Note: All OD and ID dimensions for washers and disc springs shall meet the dimensional tolerances for harden steel washers, ASTM F436

RESTRAINER UNIT INSTALLATION PROCEDURE

1. Install Cable Yield Indicator, spherical washers and disc springs on the hinge side of restrainers as shown in "Adjustment End" detail. Disc springs shall be installed front to front as shown in "Disc Spring" detail.
2. Place only nut and washer on bent side of restrainers. Place thread locking system on bent side stud prior to setting the cable.
3. Tighten the cable from the adjustment end of restrainer until the disc springs collapse and there is no disc gap remaining between the discs. The cable should be approximately straight with no sag.
4. Place thread locking system on hinge side stud after tightening the cables, but before backing off the nut. Back off the nut at hinge side a distance equal to maximum additional amount that the hinge joint is expected to open, relative to existing ambient conditions, as shown on "Joint Seal - Hinge Details MR>4"" sheet.

NOTES:

A. The ends of pipe shall be covered or capped to prevent concrete and debris from entering the pipe until hinge concrete is placed.

B. Care should be taken to align the pipes on each side of the hinge.

C. All ends of pipes must be flush with or slightly recessed from the concrete. The inside edges of the pipes must be smooth to prevent fraying of cables.

Sudhakar Vatti
DESIGN OVERSIGHT Sudhakar Vatti
8-10-09
SIGN OFF DATE

	BY	CHECKED
DESIGN	P. Morel	J. Holombo/S. Megally
DETAILS	N. Shu	J. Holombo
QUANTITIES	V. Nong	L. Khaleghi

PREPARED FOR THE STATE OF CALIFORNIA DEPARTMENT OF TRANSPORTATION

Alaedin Moubayed
PROJECT ENGINEER

BRIDGE NO. 55-1098E
POST MILE 24.02

405/605 HOV CONNECTOR
RESTRAINER UNIT - TYPE 2 DETAILS

DESIGN DETAIL SHEET (ENGLISH) (REV. 2/25/05)

ORIGINAL SCALE IN INCHES FOR REDUCED PLANS 0 1 2 3

CU 12235
EA 071631

DISREGARD PRINTS BEARING EARLIER REVISION DATES

REVISION DATES (PRELIMINARY STAGE ONLY) 02/18/08 06/02/08 09/29/08 10/15/08 03/26/09 04/06/09 07/27/09

SHEET 65 OF 87

FILE => 55-1098e-t-resunit2dt.dgn

USERNAME => friehard DATE PLOTTED => 03-FEB-2010 TIME PLOTTED => 08:10

DIST	COUNTY	ROUTE	POST MILES TOTAL PROJECT	SHEET No	TOTAL SHEETS
12	Ora	22,405, 605	R0.3/R0.9, 22.3/24.0,3.0/R1.6	1637	1929

REGISTERED CIVIL ENGINEER 07-27-09 DATE

2-1-10
PLANS APPROVAL DATE

REGISTERED PROFESSIONAL ENGINEER Paul A. Morel No. C 68491 Exp. 9-30-09 CIVIL STATE OF CALIFORNIA

The State of California or its officers or agents shall not be responsible for the accuracy or completeness of electronic copies of this plan sheet.

OCTA
550 SOUTH MAIN STREET
ORANGE, CA 92863

PBS&J
625 THE CITY DRIVE SOUTH, SUITE 200
ORANGE, CA 92868

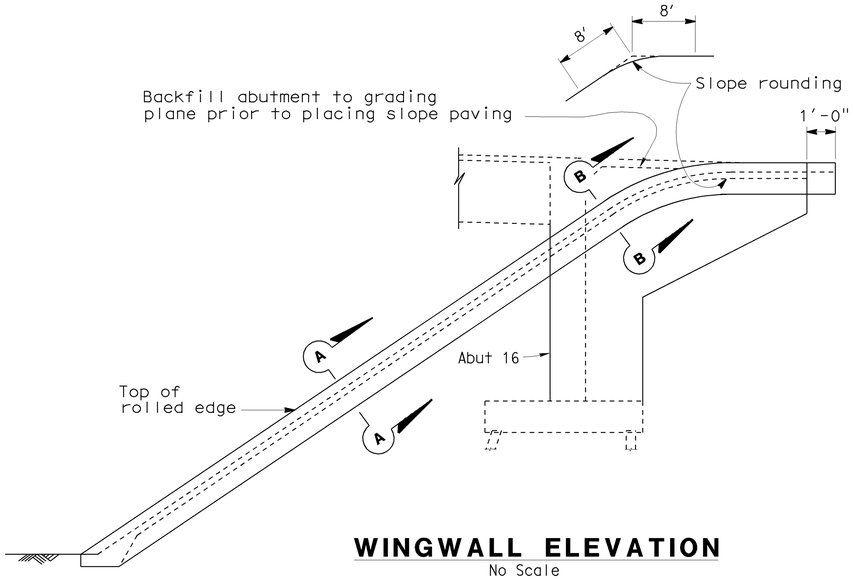

WINGWALL ELEVATION
No Scale

Details are similar at retaining wall

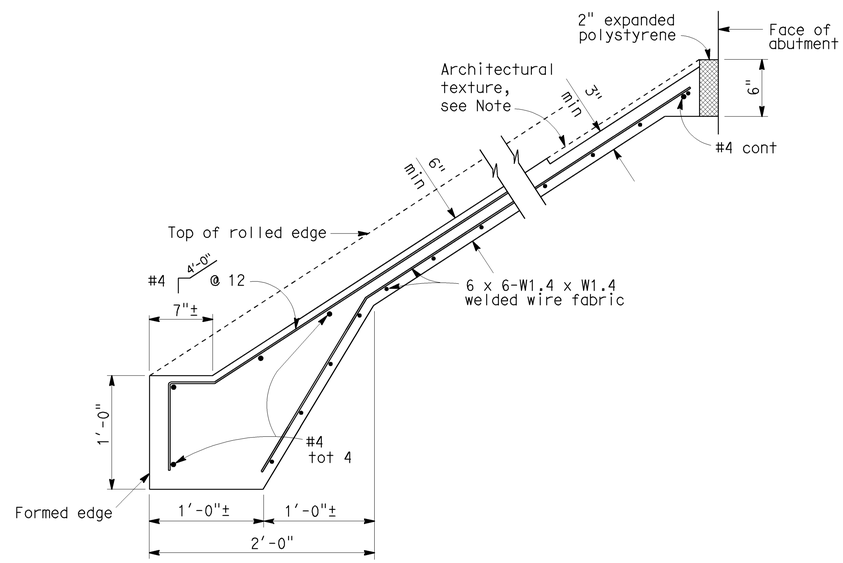

TYPICAL SECTION - CONCRETE PAVING
No Scale

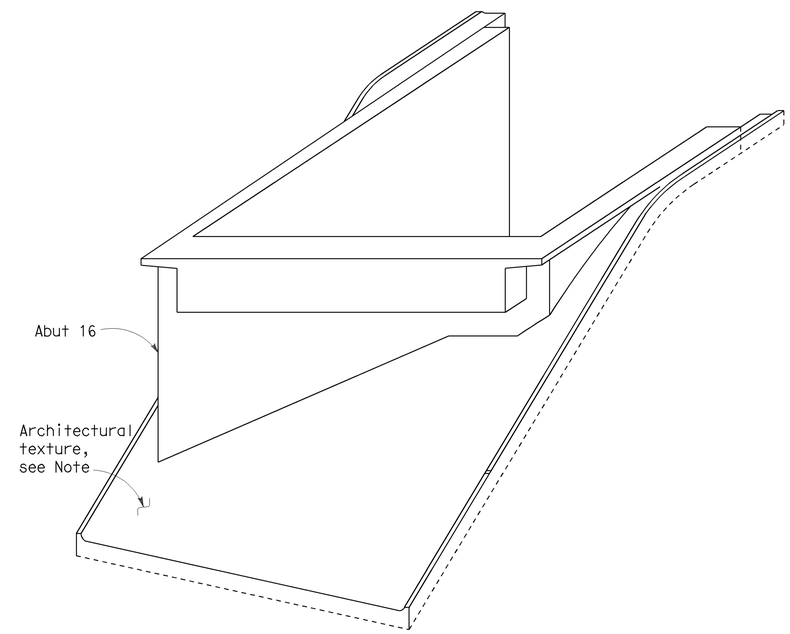

PICTORIAL VIEW OF TYPICAL INSTALLATION
No Scale

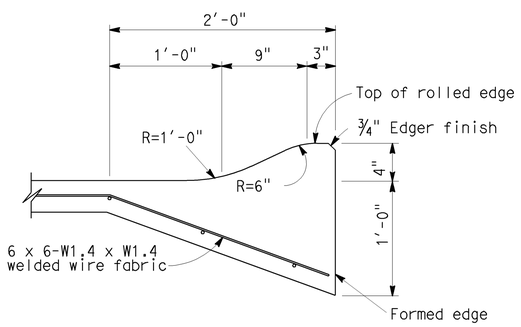

SECTION A-A
No Scale

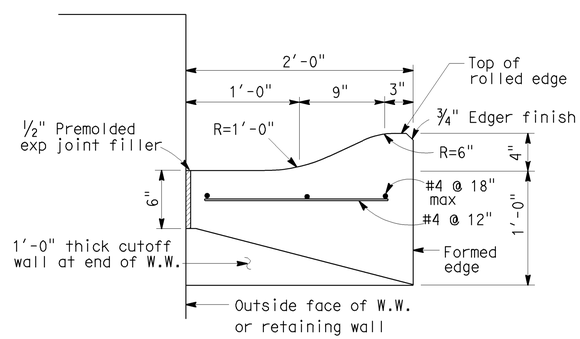

SECTION B-B
No Scale

NOTE
See "Architectural Details No. 3" sheet for Architectural texture details.

NOTE:
THE CONTRACTOR SHALL VERIFY ALL CONTROLLING FIELD DIMENSIONS BEFORE ORDERING OR FABRICATING ANY MATERIAL.

Sudhakar Vatti
DESIGN OVERSIGHT Sudhakar Vatti
8-10-09
SIGN OFF DATE

	BY	CHECKED
DESIGN	P. Morel	J. Holombo/S. Megally
DETAILS	N. Shu	J. Holombo
QUANTITIES	V. Nong	L. Khaleghi

PREPARED FOR THE STATE OF CALIFORNIA DEPARTMENT OF TRANSPORTATION

Alaedin Moubayed
PROJECT ENGINEER

BRIDGE NO. 55-1098E
POST MILE 24.02

405/605 HOV CONNECTOR
SLOPE PAVING

DESIGN DETAIL SHEET (ENGLISH) (REV. 2/25/05)

ORIGINAL SCALE IN INCHES FOR REDUCED PLANS 0 1 2 3

CU 12235
EA 071631

DISREGARD PRINTS BEARING EARLIER REVISION DATES

REVISION DATES (PRELIMINARY STAGE ONLY) 02/12/08 06/20/08 09/29/08 10/14/08 03/20/09 04/06/09 07/27/09

SHEET 66 OF 87

FILE => 55-1098e-u-mscslp.dgn

USERNAME => trienard DATE PLOTTED => 03-FEB-2010 TIME PLOTTED => 08:10

DIST	COUNTY	ROUTE	POST MILES TOTAL PROJECT	SHEET No	TOTAL SHEETS
12	Ora	22, 405, 605	R0.3/R0.9, 22.3/24.0,3.0/R1.6	1638	1929

LICENSED LANDSCAPE ARCHITECT

2-1-10
PLANS APPROVAL DATE

LICENSED LANDSCAPE ARCHITECT
CATHY L. JOHNSON
NO. 4545
01-31-10
Renewal Date
07-27-09
Date
STATE OF CALIFORNIA

The State of California or its officers or agents shall not be responsible for the accuracy or completeness of electronic copies of this plan sheet.

OCTA
550 SOUTH MAIN STREET
ORANGE, CA 92863

RBF CONSULTING
14725 ALTON PARKWAY
IRVINE, CA 92618

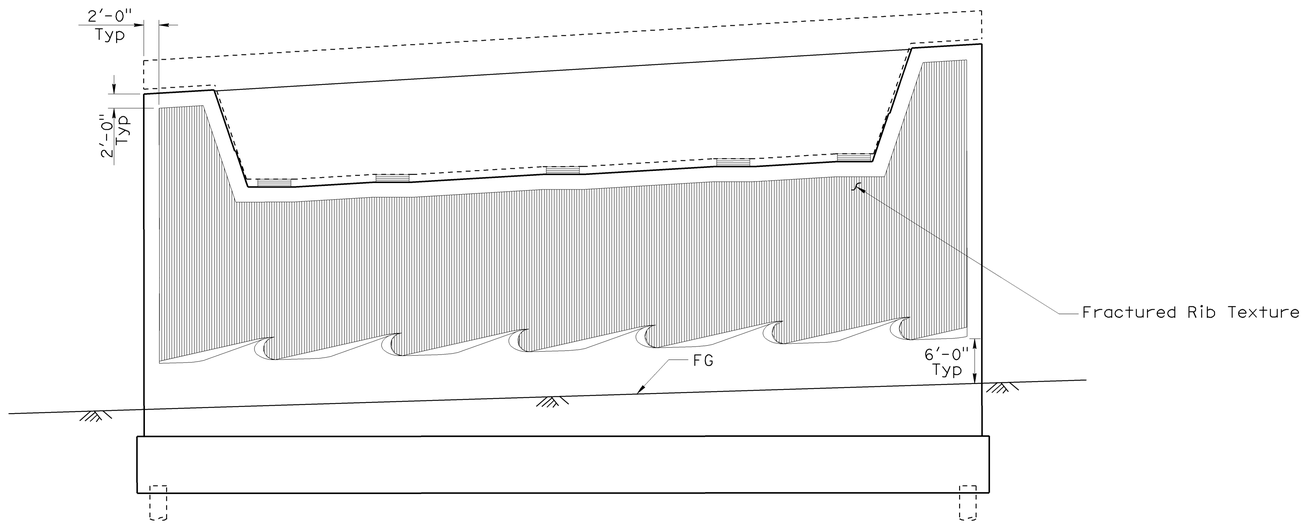

ARCHITECTURAL TEXTURE
ABUTMENT 1 ELEVATION

1/8"= 1'-0"

Note: All Piles Not Shown

NOTES

1. For Fractured Rib Texture Detail, See "Architectural Details No. 2" Sheet

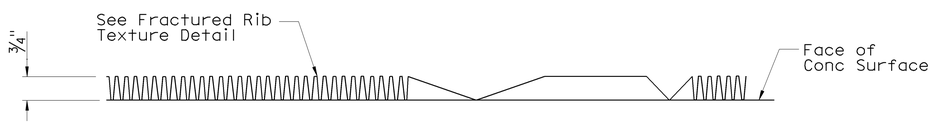

SECTION A-A

1W:10H

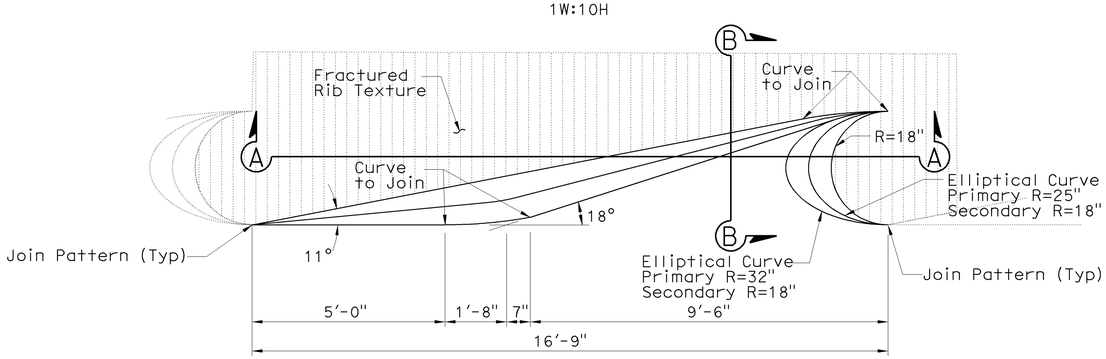

ELEVATION

No Scale

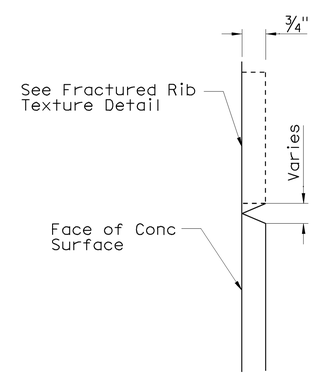

SECTION B-B

10W:1H

Sudhakar Vatti
DESIGN OVERSIGHT
Sudhakar Vatti
8-10-09
SIGN OFF DATE

	BY	CHECKED
DESIGN	C. JOHNSON	A. SU
DETAILS	R. KELCHER	A. SU
QUANTITIES	V. NONG	K. ALLAM

PREPARED FOR THE
STATE OF CALIFORNIA
DEPARTMENT OF TRANSPORTATION

A. MOUBAYED
PROJECT ENGINEER

BRIDGE NO. 55-1098E
POST MILE 24.02

405/605 HOV CONNECTOR
ARCHITECTURAL DETAILS NO. 1

DESIGN DETAIL SHEET (ENGLISH) (REV. 2/25/05)

ORIGINAL SCALE IN INCHES FOR REDUCED PLANS 0 1 2 3

CU 12235
EA 071631

DISREGARD PRINTS BEARING EARLIER REVISION DATES

REVISION DATES (PRELIMINARY STAGE ONLY) 04/06/09 07/21/09

SHEET 67 OF 87

FILE => 55-1098e-s-arch01.dgn

USERNAME => trhenard DATE PLOTTED => 03-FEB-2010 TIME PLOTTED => 08:10

DIST	COUNTY	ROUTE	POST MILES TOTAL PROJECT	SHEET No	TOTAL SHEETS
12	Ora	22, 405, 605	R0.3/R0.9, 22.3/24.0,3.0/R1.6	1639	1929

LICENSED LANDSCAPE ARCHITECT

2-1-10
PLANS APPROVAL DATE

LICENSED LANDSCAPE ARCHITECT CATHY L. JOHNSON NO. 4545 STATE OF CALIFORNIA
01-31-10 Renewal Date
07-27-09 Date

The State of California or its officers or agents shall not be responsible for the accuracy or completeness of electronic copies of this plan sheet.

OCTA
550 SOUTH MAIN STREET
ORANGE, CA 92863

RBF CONSULTING
14725 ALTON PARKWAY
IRVINE, CA 92618

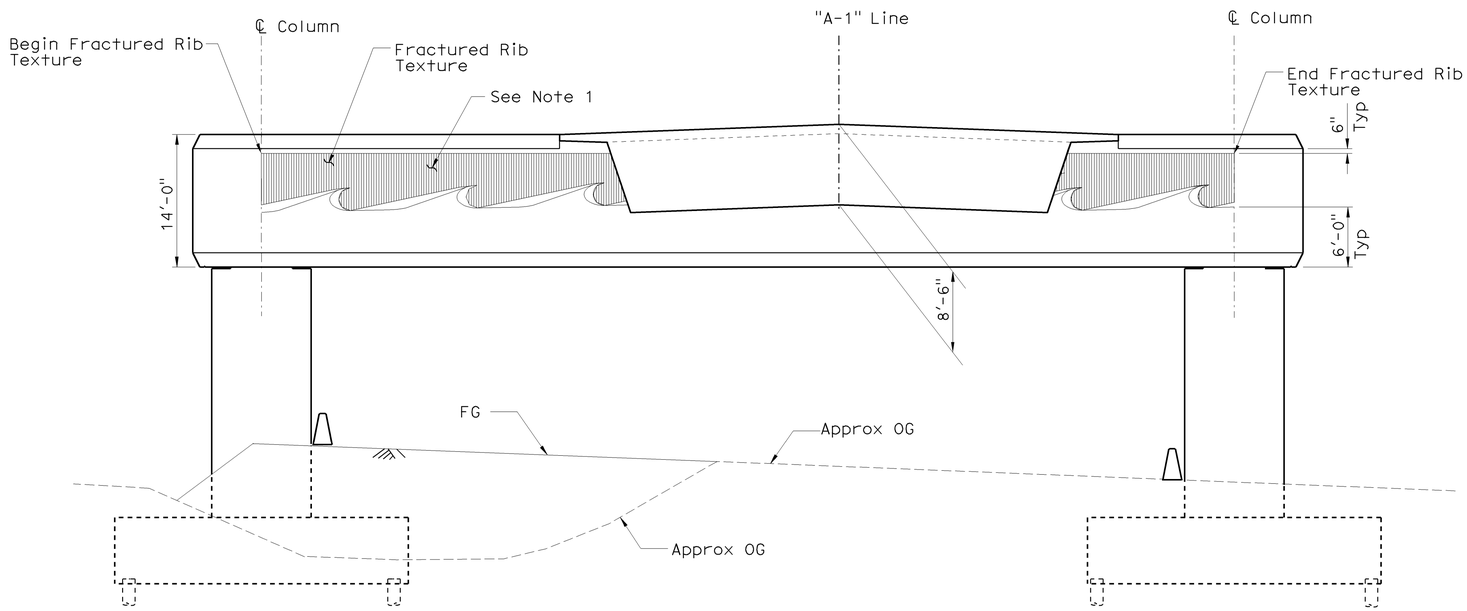

Note: All Piles Not Shown

ARCHITECTURAL TEXTURE - BENT 4

1/8"= 1'-0"

Note: All Piles Not Shown

NOTES

1. Texture Shall be Applied on Both Sides of Structure

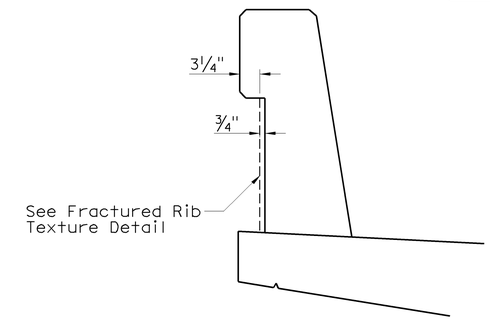

CONCRETE BARRIER (TYPE 736 MOD)

SCALE: 1"=1'-0"

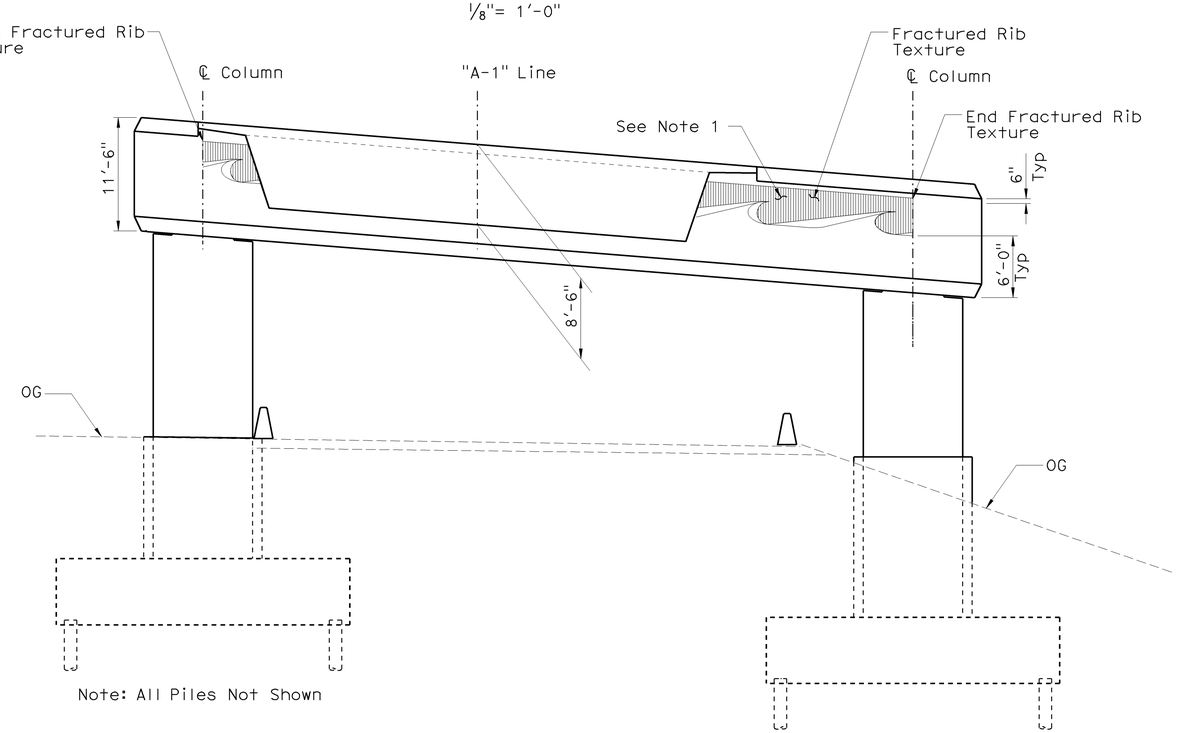

Note: All Piles Not Shown

ARCHITECTURAL TEXTURE - BENT 8

1/8"= 1'-0"

Note: All Piles Not Shown

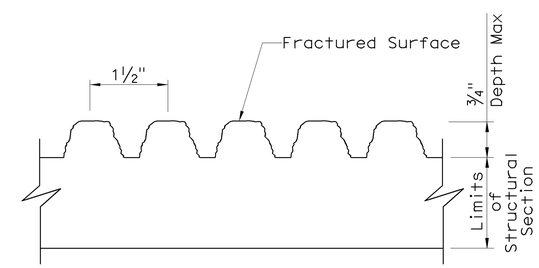

FRACTURED RIB TEXTURE

No Scale

Sudhakar Vatti — DESIGN OVERSIGHT Sudhakar Vatti; 8-10-09 SIGN OFF DATE	DESIGN	BY C. JOHNSON	CHECKED A. SU	PREPARED FOR THE STATE OF CALIFORNIA DEPARTMENT OF TRANSPORTATION	A. MOUBAYED PROJECT ENGINEER
	DETAILS	BY R. KELCHER	CHECKED A. SU		
	QUANTITIES	BY V. NONG	CHECKED K. ALLAM		

BRIDGE NO. 55-1098E
POST MILE 24.02

405/605 HOV CONNECTOR
ARCHITECTURAL DETAILS NO. 2

DESIGN DETAIL SHEET (ENGLISH) (REV. 2/25/05)

ORIGINAL SCALE IN INCHES FOR REDUCED PLANS 0 1 2 3

CU 12235
EA 071631

DISREGARD PRINTS BEARING EARLIER REVISION DATES → 04/06/09 07/27/09

REVISION DATES (PRELIMINARY STAGE ONLY)

SHEET 68 OF 87

FILE => 55-1098e-s-arch02.dgn

USERNAME => trlenard DATE PLOTTED => 03-FEB-2010 TIME PLOTTED => 08:10

DIST	COUNTY	ROUTE	POST MILES TOTAL PROJECT	SHEET No	TOTAL SHEETS
12	Ora	22, 405, 605	R0.3/R0.9, 22.3/24.0,3.0/R1.6	1640	1929

LICENSED LANDSCAPE ARCHITECT

2-1-10
PLANS APPROVAL DATE

LICENSED LANDSCAPE ARCHITECT CATHY L. JOHNSON NO. 4545 STATE OF CALIFORNIA
01-31-10 Renewal Date
07-27-09 Date

The State of California or its officers or agents shall not be responsible for the accuracy or completeness of electronic copies of this plan sheet.

OCTA
550 SOUTH MAIN STREET
ORANGE, CA 92863

RBF CONSULTING
14725 ALTON PARKWAY
IRVINE, CA 92618

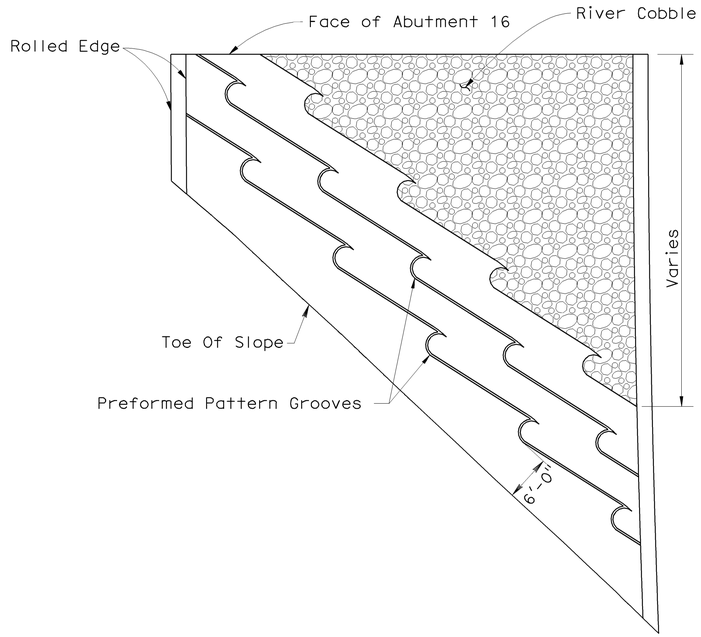

SLOPE PAVING ARCHITECTURAL TEXTURE LAYOUT - ABUTMENT 16

No Scale

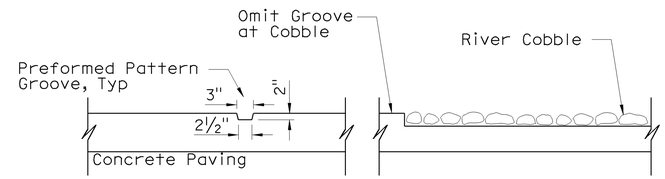

TYPICAL SECTION - PATTERN DETAIL

No Scale

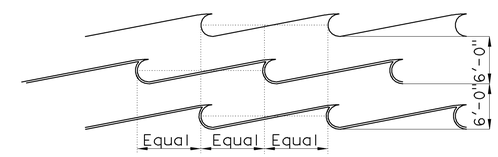

DETAIL

No Scale

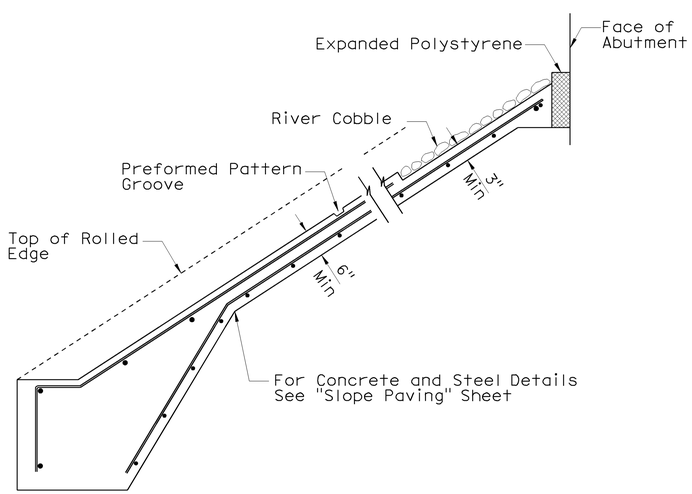

TYPICAL SECTION - CONCRETE PAVING

No Scale

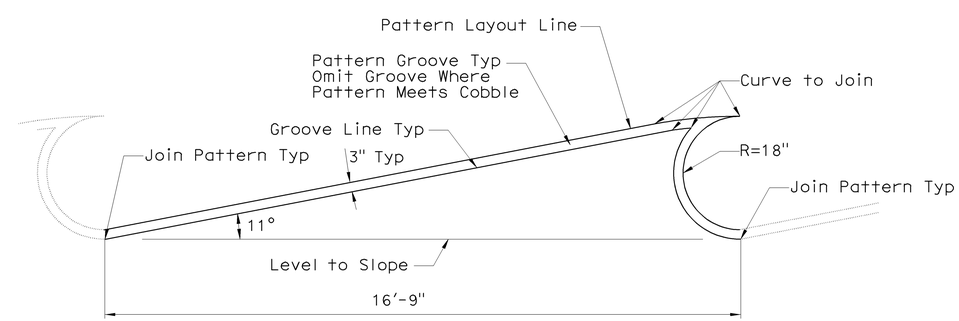

SLOPE PAVING PATTERN DETAIL

No Scale

Sudhakar Vatti
DESIGN OVERSIGHT Sudhakar Vatti
8-10-09
SIGN OFF DATE

	BY	CHECKED
DESIGN	C. JOHNSON	A. SU
DETAILS	R. KELCHER	A. SU
QUANTITIES	V. NONG	K. ALLAM

PREPARED FOR THE STATE OF CALIFORNIA DEPARTMENT OF TRANSPORTATION

A. MOUBAYED
PROJECT ENGINEER

BRIDGE NO. 55-1098E
POST MILE 24.02

405/605 HOV CONNECTOR
ARCHITECTURAL DETAILS NO. 3

DESIGN DETAIL SHEET (ENGLISH) (REV. 2/25/05)

ORIGINAL SCALE IN INCHES FOR REDUCED PLANS 0 1 2 3

CU 12235
EA 071631

DISREGARD PRINTS BEARING EARLIER REVISION DATES 04/06/09 07/27/09

REVISION DATES (PRELIMINARY STAGE ONLY)

SHEET 69 OF 87

FILE => 55-1098e-s-arch03.dgn

USERNAME => friehard DATE PLOTTED => 03-FEB-2010 TIME PLOTTED => 08:10

REFERENCE: CALTRANS SOIL & ROCK LOGGING, CLASSIFICATION, AND PRESENTATION MANUAL (JUNE 2007)

DIST	COUNTY	ROUTE	POST MILES TOTAL PROJECT	SHEET No	TOTAL SHEETS
12	Ora	22,405, 605	R0.3/R0.9, 22.3/24.0,3.0/R1.6	1641	1929

8.880 07/27/09
REGISTERED CIVIL ENGINEER DATE

2-1-10
PLANS APPROVAL DATE

REGISTERED PROFESSIONAL ENGINEER G.J.Gunaranjan No. C71758 Exp.12-31-09 CIVIL STATE OF CALIFORNIA

The State of California or its officers or agents shall not be responsible for the accuracy or completeness of electronic copies of this plan sheet.

OCTA
550 SOUTH MAIN STREET
ORANGE, CA 92863

EARTH MECHANICS, INC.
17660, NEWHOPE STREET, SUITE E
FOUNTAIN VALLEY, CA 92708

CEMENTATION

Description	Criteria
Weak	Crumbles or breaks with handling or little finger pressure.
Moderate	Crumbles or breaks with considerable finger pressure.
Strong	Will not crumble or break with finger pressure.

CONSISTENCY OF COHESIVE SOILS

Description	Unconfined Compressive Strength (tsf)	Pocket Penetrometer Measurement (tsf)	Torvane Measurement (tsf)	Field Approximation
Very Soft	< 0.25	< 0.25	< 0.12	Easily penetrated several inches by fist
Soft	0.25 to 0.50	0.25 to 0.50	0.12 to 0.25	Easily penetrated several inches by thumb
Medium Stiff	0.50 to 1.0	0.50 to 1.0	0.25 to 0.50	Penetrated several inches by thumb with moderate effort
Stiff	1 to 2	1 to 2	0.50 to 1.0	Readily indented by thumb but penetrated only with great effort
Very Stiff	2 to 4	2 to 4	1.0 to 2.0	Readily indented by thumbnail
Hard	> 4.0	> 4.0	> 2.0	Indented by thumbnail with difficulty

BOREHOLE IDENTIFICATION

Symbol	Hole Type	Description
Size	A	Auger Boring
Size	R P	Rotary drilled boring Rotary percussion boring (air)
Size	R	Rotary drilled diamond core
Size	HD HA	Hand driven (1-inch soil tube) Hand Auger
●	D	Dynamic Cone Penetration Boring
▲	CPT	Cone Penetration Test (ASTM D 5778-95)
□	O	Other

Note: Size in inches.

PLASTICITY OF FINE-GRAINED SOILS

Description	Criteria
Nonplastic	A 1/8-inch thread cannot be rolled at any water content.
Low	The thread can barely be rolled and the lump cannot be formed when drier than the plastic limit.
Medium	The thread is easy to roll and not much time is required to reach the plastic limit. The thread cannot be rerolled after reaching the plastic limit. The lump crumbles when drier than the plastic limit.
High	It takes considerable time rolling and kneading to reach the plastic limit. The thread can be rerolled several times after reaching the plastic limit. The lump can be formed without crumbling when drier than the plastic limit.

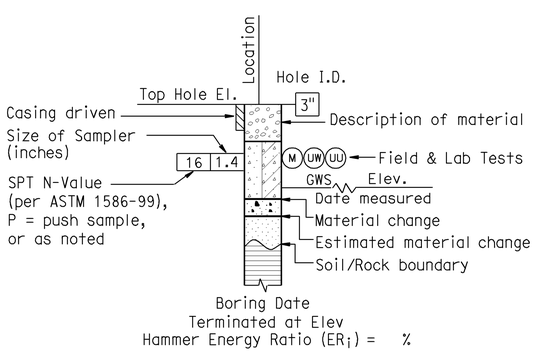

ROTARY BORING

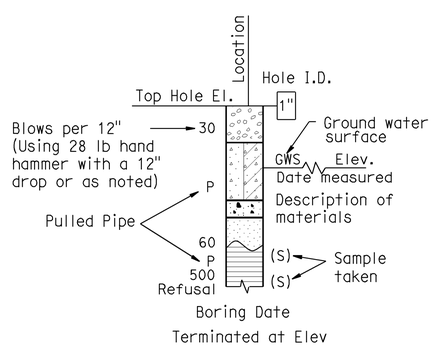

HAND BORING

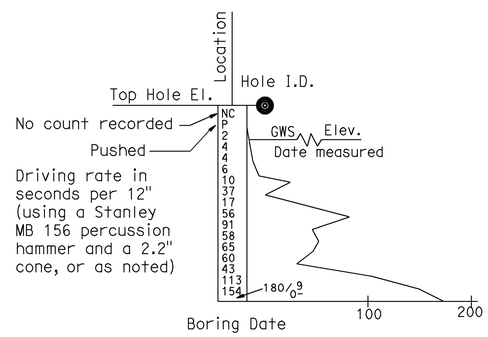

DYNAMIC CONE PENETRATION BORING

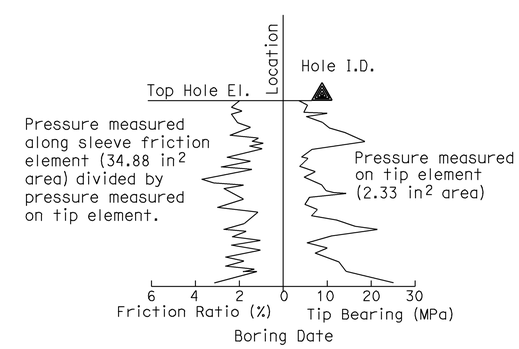

CONE PENETRATION TEST (CPT) SOUNDING

Sudhakar Vatti
DESIGN OVERSIGHT Sudhakar Vatti
8-10-09
SIGN OFF DATE

DRAWN BY: J.Fang
CHECKED BY: K.Pratheepan

FIELD INVESTIGATION BY:
R.Jie

PREPARED FOR THE STATE OF CALIFORNIA DEPARTMENT OF TRANSPORTATION

G.J.Gunaranjan
PROJECT ENGINEER

BRIDGE NO. 55-1098E
POST MILE 24.02

405/605 HOV CONNECTOR
LOG OF TEST BORINGS NO. 1

OSF CIVIL LOG OF TEST BORINGS SHEET (ENGLISH) (REV. 2-25-05)

ORIGINAL SCALE IN INCHES FOR REDUCED PLANS 0 1 2 3

CU 12235
EA 071631

DISREGARD PRINTS BEARING EARLIER REVISION DATES
REVISION DATES (PRELIMINARY STAGE ONLY) 10/25/08 03/25/09 04/06/09 07/27/09

SHEET 70 OF 87

FILE => 55-1098e-z-ltb01.dgn

USERNAME => friehard DATE PLOTTED => 03-FEB-2010 TIME PLOTTED => 10:50

REFERENCE: CALTRANS SOIL & ROCK LOGGING, CLASSIFICATION, AND PRESENTATION MANUAL (JUNE 2007)

GROUP SYMBOLS AND NAMES

Graphic/Symbol	Group Names
GW	Well-graded GRAVEL Well-graded GRAVEL with SAND
GP	Poorly graded GRAVEL Poorly graded GRAVEL with SAND
GW-GM	Well-graded GRAVEL with SILT Well-graded GRAVEL with SILT and SAND
GW-GC	Well-graded GRAVEL with CLAY (or SILTY CLAY) Well-graded GRAVEL with CLAY and SAND (or SILTY CLAY and SAND)
GP-GM	Poorly graded GRAVEL with SILT Poorly graded GRAVEL with SILT and SAND
GP-GC	Poorly graded GRAVEL with CLAY (or SILTY CLAY) Poorly graded GRAVEL with CLAY and SAND (or SILTY CLAY and SAND)
GM	SILTY GRAVEL SILTY GRAVEL with SAND
GC	CLAYEY GRAVEL CLAYEY GRAVEL with SAND
GC-GM	SILTY, CLAYEY GRAVEL SILTY, CLAYEY GRAVEL with SAND
SW	Well-graded SAND Well-graded SAND with GRAVEL
SP	Poorly graded SAND Poorly graded SAND with GRAVEL
SW-SM	Well-graded SAND with SILT Well-graded SAND with SILT and GRAVEL
SW-SC	Well-graded SAND with CLAY (or SILTY CLAY) Well-graded SAND with CLAY and GRAVEL (or SILTY CLAY and GRAVEL)
SP-SM	Poorly graded SAND with SILT Poorly graded SAND with SILT and GRAVEL
SP-SC	Poorly graded SAND with CLAY (or SILTY CLAY) Poorly graded SAND with CLAY and GRAVEL (or SILTY CLAY and GRAVEL)
SM	SILTY SAND SILTY SAND with GRAVEL
SC	CLAYEY SAND CLAYEY SAND with GRAVEL
SC-SM	SILTY, CLAYEY SAND SILTY, CLAYEY SAND with GRAVEL
PT	PEAT
	COBBLES COBBLES and BOULDERS BOULDERS

Graphic/Symbol	Group Names
CL	Lean CLAY Lean CLAY with SAND Lean CLAY with GRAVEL SANDY lean CLAY SANDY lean CLAY with GRAVEL GRAVELLY lean CLAY GRAVELLY lean CLAY with SAND
CL-ML	SILTY CLAY SILTY CLAY with SAND SILTY CLAY with GRAVEL SANDY SILTY CLAY SANDY SILTY CLAY with GRAVEL GRAVELLY SILTY CLAY GRAVELLY SILTY CLAY with SAND
ML	SILT SILT with SAND SILT with GRAVEL SANDY SILT SANDY SILT with GRAVEL GRAVELLY SILT GRAVELLY SILT with SAND
OL	ORGANIC lean CLAY ORGANIC lean CLAY with SAND ORGANIC lean CLAY with GRAVEL SANDY ORGANIC lean CLAY SANDY ORGANIC lean CLAY with GRAVEL GRAVELLY ORGANIC lean CLAY GRAVELLY ORGANIC lean CLAY with SAND
OL	ORGANIC SILT ORGANIC SILT with SAND ORGANIC SILT with GRAVEL SANDY ORGANIC SILT SANDY ORGANIC SILT with GRAVEL GRAVELLY ORGANIC SILT GRAVELLY ORGANIC SILT with SAND
CH	Fat CLAY Fat CLAY with SAND Fat CLAY with GRAVEL SANDY fat CLAY SANDY fat CLAY with GRAVEL GRAVELLY fat CLAY GRAVELLY fat CLAY with SAND
MH	Elastic SILT Elastic SILT with SAND Elastic SILT with GRAVEL SANDY elastic SILT SANDY elastic SILT with GRAVEL GRAVELLY elastic SILT GRAVELLY elastic SILT with SAND
OH	ORGANIC fat CLAY ORGANIC fat CLAY with SAND ORGANIC fat CLAY with GRAVEL SANDY ORGANIC fat CLAY SANDY ORGANIC fat CLAY with GRAVEL GRAVELLY ORGANIC fat CLAY GRAVELLY ORGANIC fat CLAY with SAND
OH	ORGANIC elastic SILT ORGANIC elastic SILT with SAND ORGANIC elastic SILT with GRAVEL SANDY ORGANIC elastic SILT SANDY ORGANIC elastic SILT with GRAVEL GRAVELLY ORGANIC elastic SILT GRAVELLY ORGANIC elastic SILT with SAND
OL/OH	ORGANIC SOIL ORGANIC SOIL with SAND ORGANIC SOIL with GRAVEL SANDY ORGANIC SOIL SANDY ORGANIC SOIL with GRAVEL GRAVELLY ORGANIC SOIL GRAVELLY ORGANIC SOIL with SAND

FIELD AND LABORATORY TESTING

- (C) Consolidation (ASTM D 2435)
- (CL) Collapse Potential (ASTM D 5333)
- (CP) Compaction Curve (CTM 216)
- (CR) Corrosivity Testing (CTM 643, CTM 422, CTM 417)
- (CU) Consolidated Undrained Triaxial (ASTM D 4767)
- (DS) Direct Shear (ASTM D 3080)
- (EI) Expansion Index (ASTM D 4829)
- (M) Moisture Content (ASTM D 2216)
- (OC) Organic Content-% (ASTM D 2974)
- (P) Permeability (CTM 220)
- (PA) Particle Size Analysis (ASTM D 422)
- (PI) Plasticity Index (AASHTO T 90) Liquid Limit (AASHTO T 89)
- (PL) Point Load Index (ASTM D 5731)
- (PM) Pressure Meter
- (PP) Pocket Penetrometer
- (R) R-Value (CTM 301)
- (SE) Sand Equivalent (CTM 217)
- (SG) Specific Gravity (AASHTO T 100)
- (SL) Shrinkage Limit (ASTM D 427)
- (SW) Swell Potential (ASTM D 4546)
- (TV) Pocket Torvane
- (UC) Unconfined Compression-Soil (ASTM D 2166) Unconfined Compression-Rock (ASTM D 2938)
- (UU) Unconsolidated Undrained Triaxial (ASTM D 2850)
- (UW) Unit Weight (ASTM D 4767)
- (VS) Vane Shear (AASHTO T 223)

DIST	COUNTY	ROUTE	POST MILES TOTAL PROJECT	SHEET No	TOTAL SHEETS
12	Ora	22,405, 605	R0.3/R0.9, 22.3/24.0,3.0/R1.6	1642	1929

REGISTERED CIVIL ENGINEER 07/27/09 DATE

2-1-10
PLANS APPROVAL DATE

REGISTERED PROFESSIONAL ENGINEER G.J.Gunaranjan No. C71758 Exp.12-31-09 CIVIL STATE OF CALIFORNIA

The State of California or its officers or agents shall not be responsible for the accuracy or completeness of electronic copies of this plan sheet.

OCTA
550 SOUTH MAIN STREET
ORANGE, CA 92863

EARTH MECHANICS, INC.
17660, NEWHOPE STREET, SUITE E
FOUNTAIN VALLEY, CA 92708

APPARENT DENSITY OF COHESIONLESS SOILS

Description	SPT N_{60} (Blows / 12 inches)
Very loose	0 - 4
Loose	5 - 10
Medium Dense	11 - 30
Dense	31 - 50
Very Dense	> 50

MOISTURE

Description	Criteria
Dry	Absence of moisture, dusty, dry to the touch
Moist	Damp but no visible water
Wet	Visible free water, usually soil is below water table

PERCENT OR PROPORTION OF SOILS

Description	Criteria
Trace	Particles are present but estimated to be less than 5%
Few	5 to 10%
Little	15 to 25%
Some	30 to 45%
Mostly	50 to 100%

PARTICLE SIZE

Description		Size
Boulder		> 12"
Cobble		3" to 12"
Gravel	Coarse	3/4" to 3"
	Fine	No. 4 to 3/4"
Sand	Coarse	No. 10 to No. 4
	Medium	No. 40 to No. 10
	Fine	No. 200 to No. 40

Sudhakar Vatti
DESIGN OVERSIGHT Sudhakar Vatti
8-10-09
SIGN OFF DATE

DRAWN BY: J.Fang
CHECKED BY: K.Pratheepan

FIELD INVESTIGATION BY:
R.Jie

PREPARED FOR THE STATE OF CALIFORNIA DEPARTMENT OF TRANSPORTATION

G.J.Gunaranjan
PROJECT ENGINEER

BRIDGE NO. 55-1098E
POST MILE 24.02

405/605 HOV CONNECTOR
LOG OF TEST BORINGS NO. 2

OSF CIVIL LOG OF TEST BORINGS SHEET (ENGLISH) (REV. 2-25-05)

ORIGINAL SCALE IN INCHES FOR REDUCED PLANS 0 1 2 3

CU 12235
EA 071631

DISREGARD PRINTS BEARING EARLIER REVISION DATES

REVISION DATES (PRELIMINARY STAGE ONLY) 10/15/08 03/23/09 04/06/09 07/21/09

SHEET 71 OF 87

FILE => 55-1098e-z-1tb02.dgn

USERNAME => trlenard DATE PLOTTED => 03-FEB-2010 TIME PLOTTED => 10:50

DIST	COUNTY	ROUTE	POST MILES TOTAL PROJECT	SHEET No	TOTAL SHEETS
12	Ora	22,405, 605	R0.3/R0.9, 22.3/24.0,3.0/R1.6	1643	1929

REGISTERED CIVIL ENGINEER 07/27/09 DATE

2-1-10
PLANS APPROVAL DATE

REGISTERED PROFESSIONAL ENGINEER G.J.Gunaranjan No. C71758 Exp.12-31-09 CIVIL STATE OF CALIFORNIA

The State of California or its officers or agents shall not be responsible for the accuracy or completeness of electronic copies of this plan sheet.

OCTA
550 SOUTH MAIN STREET
ORANGE, CA 92863

EARTH MECHANICS, INC.
17660, NEWHOPE STREET, SUITE E
FOUNTAIN VALLEY, CA 92708

BENCHMARKS:

Monument: 1A-144-04

Described by OCS 2005 - Found 3.75" OCS aluminum benchmark disk stamped "1A-144-04", set in the southwesterly corner of a 4.4 ft by 4.4 ft concrete catch basin. Monument is located in the northeasterly corner of the intersection of Seal Beach Boulevard and St. Cloud Drive, 44 ft easterly of the centerline of Seal Beach Boulevard and 58 ft northerly of the centerline of St. Cloud Dr. Monument is set level with the sidewalk.

Elevation: 15.37 feet

NOTES:

(1) This LOTB sheet (Boring Record) was prepared in accordance with the Caltrans Soil and Rock Classification Logging, Classification and Presentation Manual (June 2007).

(2) 2.4" samples were taken using a California Modified Sampler.

(3) A rope and cat-head hammer system consisting of a hammer weight of 140 lbs falling a distance of 30" was used to advance the drive sampler.

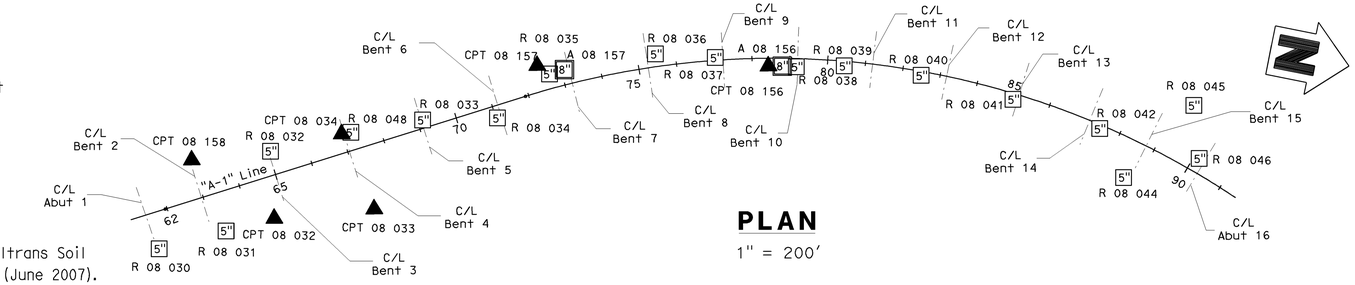

PLAN

1" = 200'

PROFILE

VERTICAL 1" = 10'
HORIZONTAL 1" = 40'

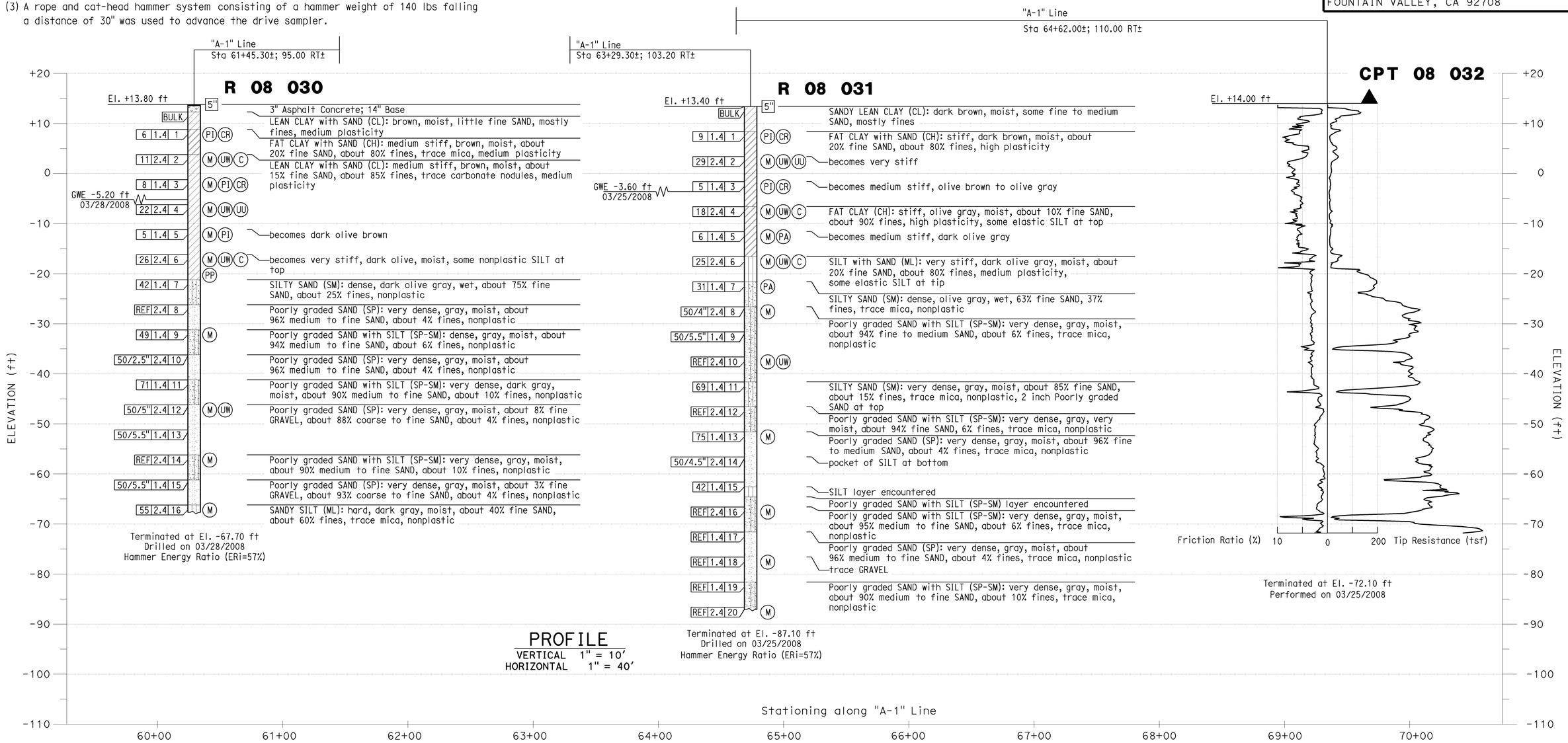

Sudhakar Vatti DESIGN OVERSIGHT Sudhakar Vatti 8-10-09 SIGN OFF DATE	DRAWN BY: J.Fang CHECKED BY: K.Pratheepan	FIELD INVESTIGATION BY: R.Jie	PREPARED FOR THE STATE OF CALIFORNIA DEPARTMENT OF TRANSPORTATION	G.J.Gunaranjan PROJECT ENGINEER	BRIDGE NO. 55-1098E POST MILE 24.02	405/605 HOV CONNECTOR LOG OF TEST BORINGS NO. 3

OSF CIVIL LOG OF TEST BORINGS SHEET (ENGLISH) (REV. 2-25-05)

ORIGINAL SCALE IN INCHES FOR REDUCED PLANS 0 1 2 3

CU 12235
EA 071631

DISREGARD PRINTS BEARING EARLIER REVISION DATES

REVISION DATES (PRELIMINARY STAGE ONLY) 10/15/08 03/25/09 04/06/09 07/21/09

SHEET 72 OF 87

FILE => 55-1098e-z-ltb03.dgn

USERNAME => rtrienord DATE PLOTTED => 03-FEB-2010 TIME PLOTTED => 10:50

DIST	COUNTY	ROUTE	POST MILES TOTAL PROJECT	SHEET No	TOTAL SHEETS
12	Ora	22,405, 605	R0.3/R0.9, 22.3/24.0,3.0/R1.6	1644	1929

REGISTERED CIVIL ENGINEER 07/27/09 DATE

2-1-10
PLANS APPROVAL DATE

REGISTERED PROFESSIONAL ENGINEER G.J.Gunaranjan No. C71758 Exp.12-31-09 CIVIL STATE OF CALIFORNIA

The State of California or its officers or agents shall not be responsible for the accuracy or completeness of electronic copies of this plan sheet.

OCTA
550 SOUTH MAIN STREET
ORANGE, CA 92863

EARTH MECHANICS, INC.
17660, NEWHOPE STREET, SUITE E
FOUNTAIN VALLEY, CA 92708

BENCHMARKS:

Monument: 1A-144-04

Described by OCS 2005 - Found 3.75" OCS aluminum benchmark disk stamped "1A-144-04", set in the southwesterly corner of a 4.4 ft by 4.4 ft concrete catch basin. Monument is located in the northeasterly corner of the intersection of Seal Beach Boulevard and St. Cloud Drive, 44 ft easterly of the centerline of Seal Beach Boulevard and 58 ft northerly of the centerline of St. Cloud Dr. Monument is set level with the sidewalk.

Elevation: 15.37 feet

NOTES:

(1) This LOTB sheet (Boring Record) was prepared in accordance with the Caltrans Soil and Rock Classification Logging, Classification and Presentation Manual (June 2007).

(2) 2.4" samples were taken using a California Modified Sampler.

(3) A rope and cat-head hammer system consisting of a hammer weight of 140 lbs falling a distance of 30" was used to advance the drive sampler.

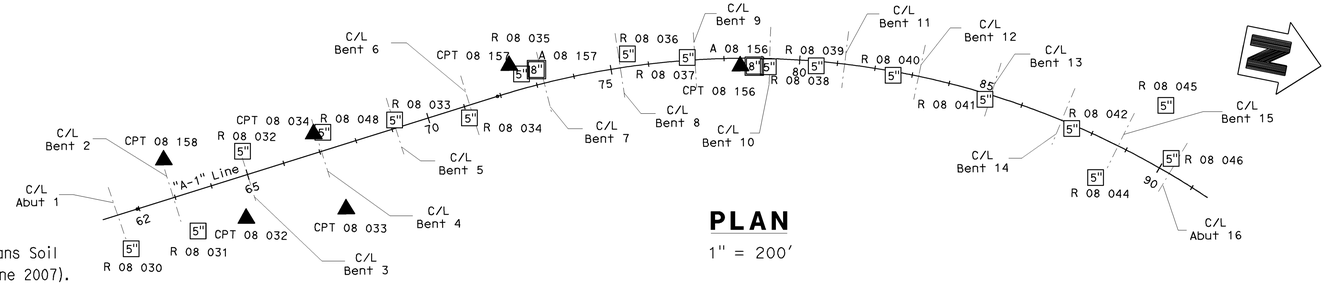

PLAN

1" = 200'

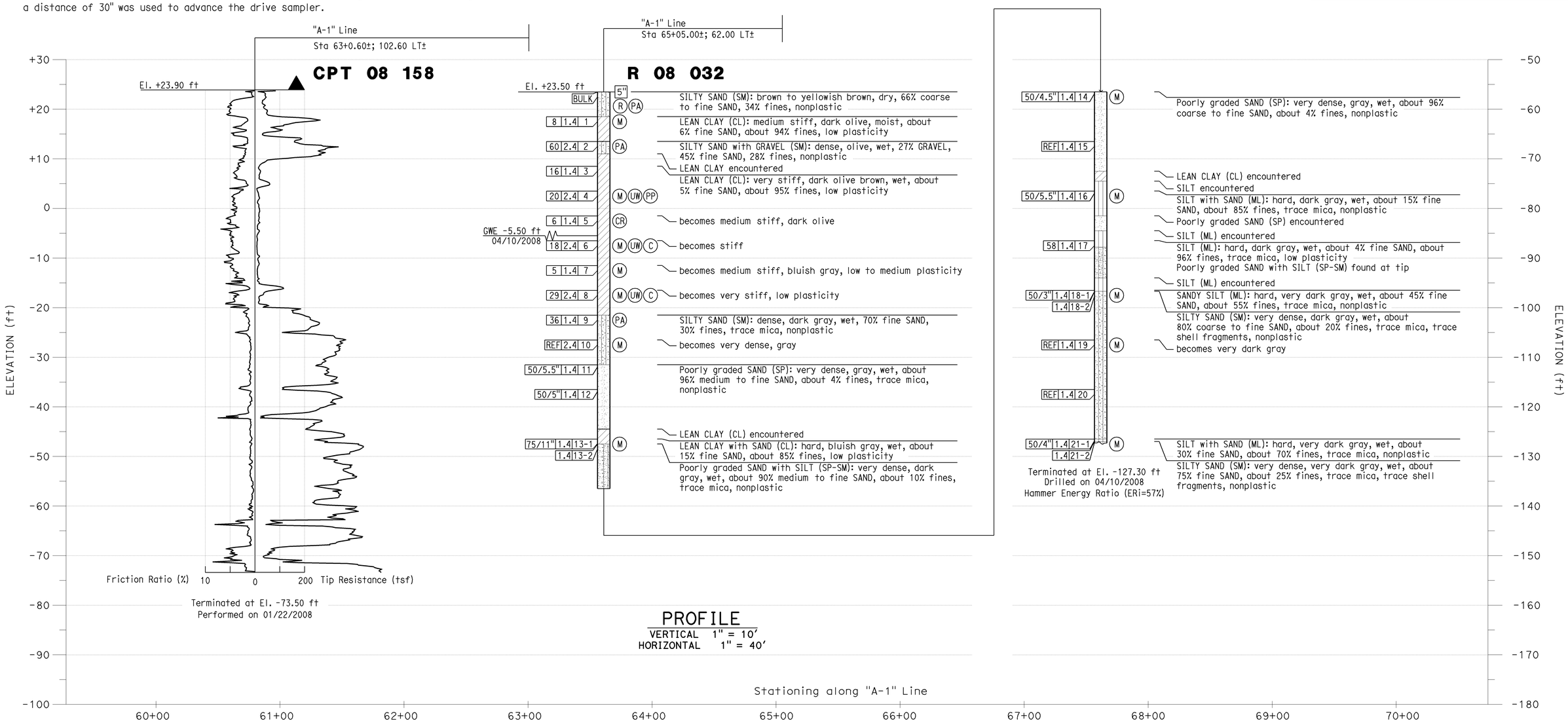

PROFILE

VERTICAL 1" = 10'
HORIZONTAL 1" = 40'

Sudhakar Vatti DESIGN OVERSIGHT Sudhakar Vatti 8-10-09 SIGN OFF DATE	DRAWN BY: J.Fang CHECKED BY: K.Pratheepan	FIELD INVESTIGATION BY: R.Jie	PREPARED FOR THE STATE OF CALIFORNIA DEPARTMENT OF TRANSPORTATION	G.J.Gunaranjan PROJECT ENGINEER	BRIDGE NO. 55-1098E POST MILE 24.02	405/605 HOV CONNECTOR LOG OF TEST BORINGS NO. 4

OSF CIVIL LOG OF TEST BORINGS SHEET (ENGLISH) (REV. 2-25-05)

ORIGINAL SCALE IN INCHES FOR REDUCED PLANS 0 1 2 3

CU 12235
EA 071631

DISREGARD PRINTS BEARING EARLIER REVISION DATES

REVISION DATES (PRELIMINARY STAGE ONLY) 10/25/08 03/25/09 04/06/09 07/27/09

SHEET 73 OF 87

FILE => 55-1098e-z-1tb04.dgn

USERNAME => friehard DATE PLOTTED => 03-FEB-2010 TIME PLOTTED => 10:51

DIST	COUNTY	ROUTE	POST MILES TOTAL PROJECT	SHEET No	TOTAL SHEETS
12	Ora	22,405, 605	R0.3/R0.9, 22.3/24.0,3.0/R1.6	1645	1929

REGISTERED CIVIL ENGINEER 07/27/09 DATE

2-1-10
PLANS APPROVAL DATE

REGISTERED PROFESSIONAL ENGINEER G.J.Gunaranjan No. C71758 Exp.12-31-09 CIVIL STATE OF CALIFORNIA

The State of California or its officers or agents shall not be responsible for the accuracy or completeness of electronic copies of this plan sheet.

OCTA
550 SOUTH MAIN STREET
ORANGE, CA 92863

EARTH MECHANICS, INC.
17660, NEWHOPE STREET, SUITE E
FOUNTAIN VALLEY, CA 92708

BENCHMARKS:

Monument: 1A-144-04

Described by OCS 2005 - Found 3.75" OCS aluminum benchmark disk stamped "1A-144-04", set in the southwesterly corner of a 4.4 ft by 4.4 ft concrete catch basin. Monument is located in the northeasterly corner of the intersection of Seal Beach Boulevard and St. Cloud Drive, 44 ft easterly of the centerline of Seal Beach Boulevard and 58 ft northerly of the centerline of St. Cloud Dr. Monument is set level with the sidewalk.

Elevation: 15.37 feet

NOTES:

(1) This LOTB sheet (Boring Record) was prepared in accordance with the Caltrans Soil and Rock Classification Logging, Classification and Presentation Manual (June 2007).

(2) 2.4" samples were taken using a California Modified Sampler.

(3) A rope and cat-head hammer system consisting of a hammer weight of 140 lbs falling a distance of 30" was used to advance the drive sampler.

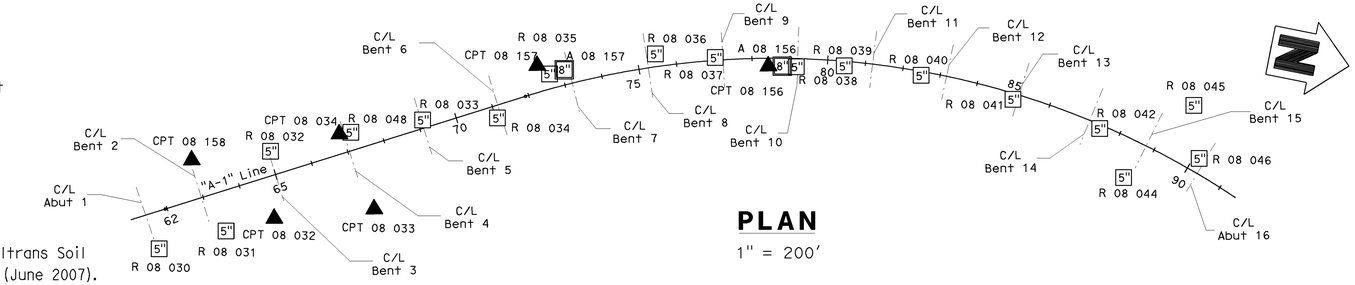

PLAN

1" = 200'

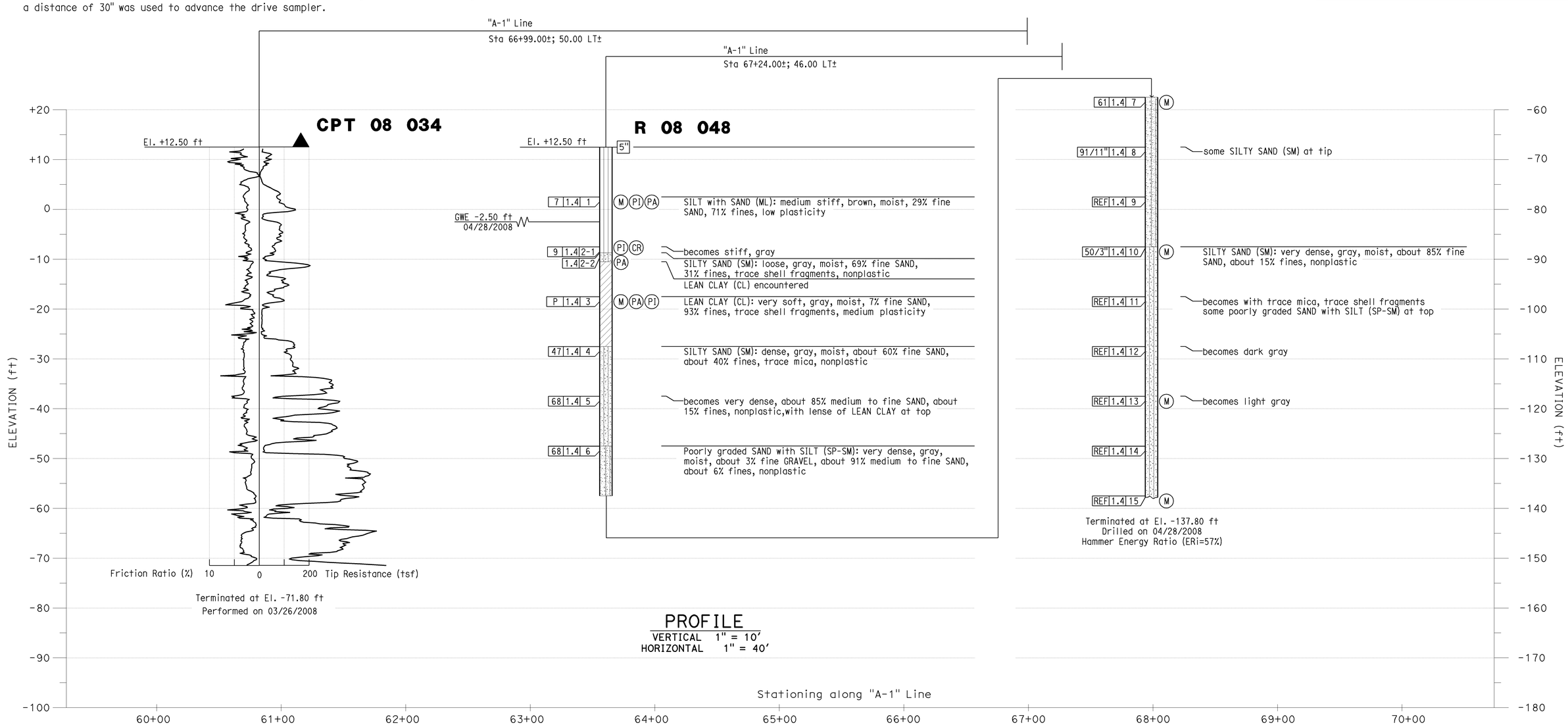

PROFILE

VERTICAL 1" = 10'
HORIZONTAL 1" = 40'

Sudhakar Vatti
DESIGN OVERSIGHT Sudhakar Vatti
8-10-09
SIGN OFF DATE

DRAWN BY: J.Fang
CHECKED BY: K.Pratheepan

FIELD INVESTIGATION BY:
R.Jie

PREPARED FOR THE STATE OF CALIFORNIA DEPARTMENT OF TRANSPORTATION

G.J.Gunaranjan
PROJECT ENGINEER

BRIDGE NO. 55-1098E
POST MILE 24.02

405/605 HOV CONNECTOR

LOG OF TEST BORINGS NO. 5

OSF CIVIL LOG OF TEST BORINGS SHEET (ENGLISH) (REV. 2-25-05)

ORIGINAL SCALE IN INCHES FOR REDUCED PLANS 0 1 2 3

CU 12235
EA 071631

DISREGARD PRINTS BEARING EARLIER REVISION DATES

REVISION DATES (PRELIMINARY STAGE ONLY) 10/25/08 03/25/09 04/06/09 07/21/09

SHEET 74 OF 87

FILE => 55-1098e-z-1tb05.dgn

USERNAME => friehard DATE PLOTTED => 03-FEB-2010 TIME PLOTTED => 10:51

DIST	COUNTY	ROUTE	POST MILES TOTAL PROJECT	SHEET No	TOTAL SHEETS
12	Ora	22,405, 605	R0.3/R0.9, 22.3/24.0,3.0/R1.6	1646	1929

REGISTERED CIVIL ENGINEER 07/27/09 DATE

2-1-10
PLANS APPROVAL DATE

REGISTERED PROFESSIONAL ENGINEER G.J.Gunaranjan No. C71758 Exp.12-31-09 CIVIL STATE OF CALIFORNIA

The State of California or its officers or agents shall not be responsible for the accuracy or completeness of electronic copies of this plan sheet.

OCTA
550 SOUTH MAIN STREET
ORANGE, CA 92863

EARTH MECHANICS, INC.
17660, NEWHOPE STREET, SUITE E
FOUNTAIN VALLEY, CA 92708

BENCHMARKS:

Monument: 1A-144-04

Described by OCS 2005 - Found 3.75" OCS aluminum benchmark disk stamped "1A-144-04", set in the southwesterly corner of a 4.4 ft by 4.4 ft concrete catch basin. Monument is located in the northeasterly corner of the intersection of Seal Beach Boulevard and St. Cloud Drive, 44 ft easterly of the centerline of Seal Beach Boulevard and 58 ft northerly of the centerline of St. Cloud Dr. Monument is set level with the sidewalk.

Elevation: 15.37 feet

NOTES:

(1) This LOTB sheet (Boring Record) was prepared in accordance with the Caltrans Soil and Rock Classification Logging, Classification and Presentation Manual (June 2007).

(2) 2.4" samples were taken using a California Modified Sampler.

(3) A rope and cat-head hammer system consisting of a hammer weight of 140 lbs falling a distance of 30" was used to advance the drive sampler.

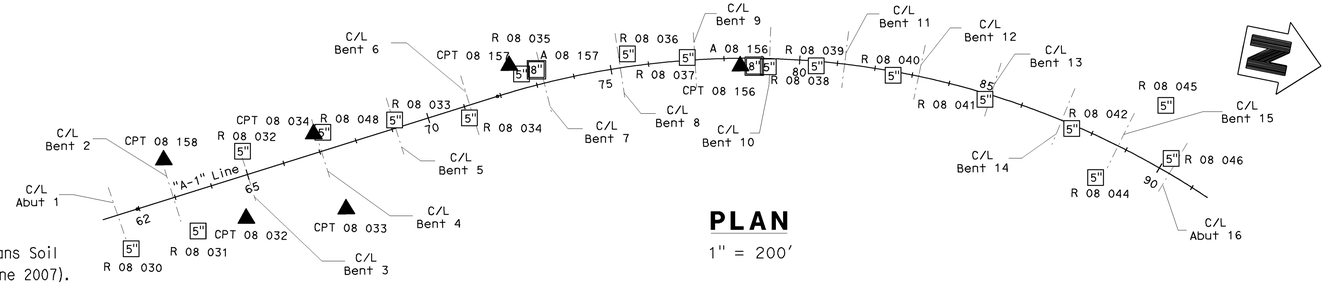

PLAN

1" = 200'

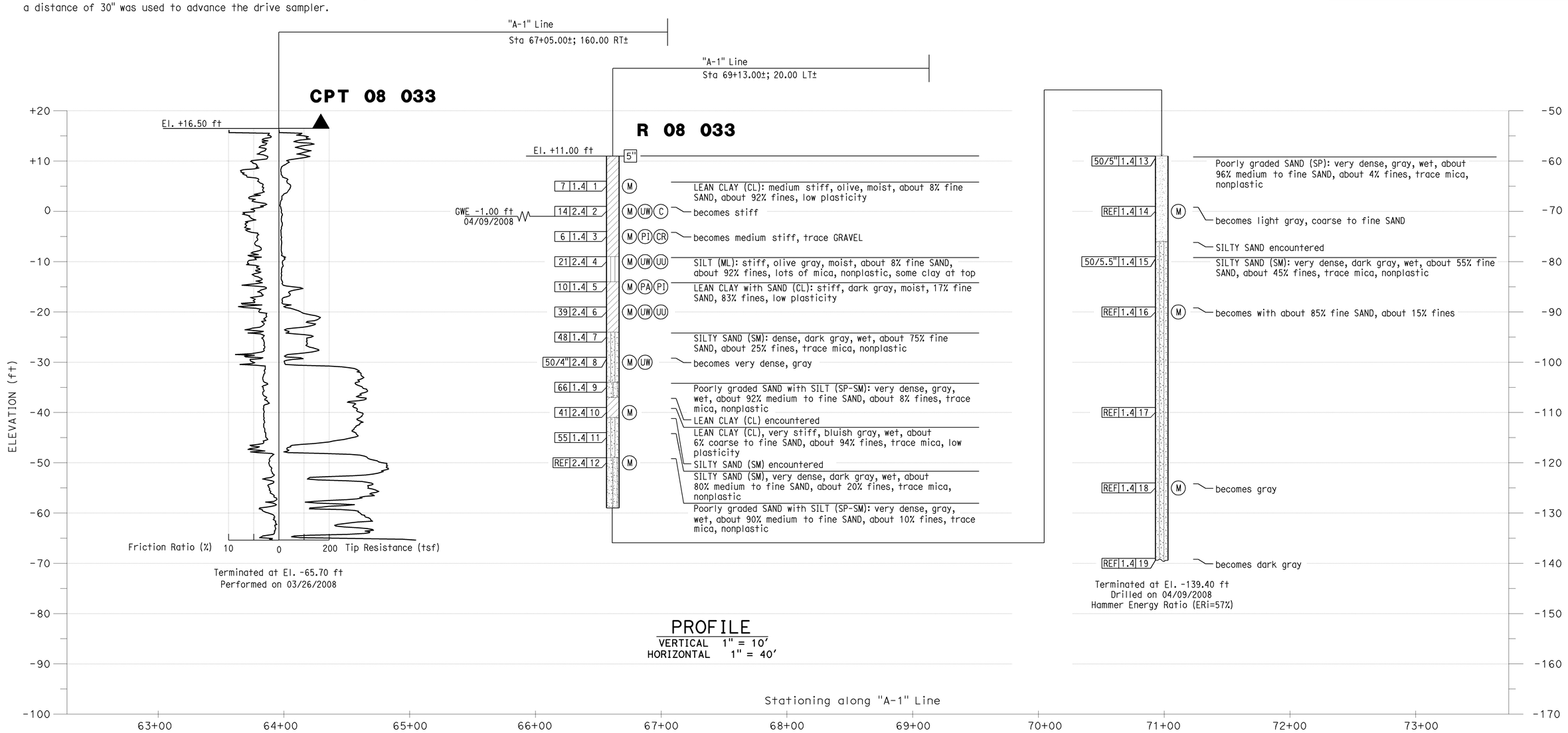

PROFILE

VERTICAL 1" = 10'
HORIZONTAL 1" = 40'

Sudhakar Vatti
DESIGN OVERSIGHT Sudhakar Vatti
8-10-09
SIGN OFF DATE

DRAWN BY: J.Fang
CHECKED BY: K.Pratheepan

FIELD INVESTIGATION BY:
R.Jie

PREPARED FOR THE STATE OF CALIFORNIA DEPARTMENT OF TRANSPORTATION

G.J.Gunaranjan
PROJECT ENGINEER

BRIDGE NO. 55-1098E
POST MILE 24.02

405/605 HOV CONNECTOR

LOG OF TEST BORINGS NO. 6

OSF CIVIL LOG OF TEST BORINGS SHEET (ENGLISH) (REV. 2-25-05)

ORIGINAL SCALE IN INCHES FOR REDUCED PLANS 0 1 2 3

CU 12235
EA 071631

DISREGARD PRINTS BEARING EARLIER REVISION DATES

REVISION DATES (PRELIMINARY STAGE ONLY) 10/25/08 03/25/09 04/06/09 07/21/09

SHEET 75 OF 87

FILE => 55-1098e-z-lltb06.dgn

USERNAME => trlenard DATE PLOTTED => 03-FEB-2010 TIME PLOTTED => 10:51

DIST	COUNTY	ROUTE	POST MILES TOTAL PROJECT	SHEET No	TOTAL SHEETS
12	Ora	22,405, 605	R0.3/R0.9, 22.3/24.0,3.0/R1.6	1647	1929

REGISTERED CIVIL ENGINEER 07/27/09 DATE

2-1-10
PLANS APPROVAL DATE

REGISTERED PROFESSIONAL ENGINEER G.J.Gunaranjan No. C71758 Exp.12-31-09 CIVIL STATE OF CALIFORNIA

The State of California or its officers or agents shall not be responsible for the accuracy or completeness of electronic copies of this plan sheet.

OCTA
550 SOUTH MAIN STREET
ORANGE, CA 92863

EARTH MECHANICS, INC.
17660, NEWHOPE STREET, SUITE E
FOUNTAIN VALLEY, CA 92708

BENCHMARKS:

Monument: 1A-144-04

Described by OCS 2005 - Found 3.75" OCS aluminum benchmark disk stamped "1A-144-04", set in the southwesterly corner of a 4.4 ft by 4.4 ft concrete catch basin. Monument is located in the northeasterly corner of the intersection of Seal Beach Boulevard and St. Cloud Drive, 44 ft easterly of the centerline of Seal Beach Boulevard and 58 ft northerly of the centerline of St. Cloud Dr. Monument is set level with the sidewalk.

Elevation: 15.37 feet

NOTES:

(1) This LOTB sheet (Boring Record) was prepared in accordance with the Caltrans Soil and Rock Classification Logging, Classification and Presentation Manual (June 2007).

(2) 2.4" samples were taken using a California Modified Sampler.

(3) A rope and cat-head hammer system consisting of a hammer weight of 140 lbs falling a distance of 30" was used to advance the drive sampler.

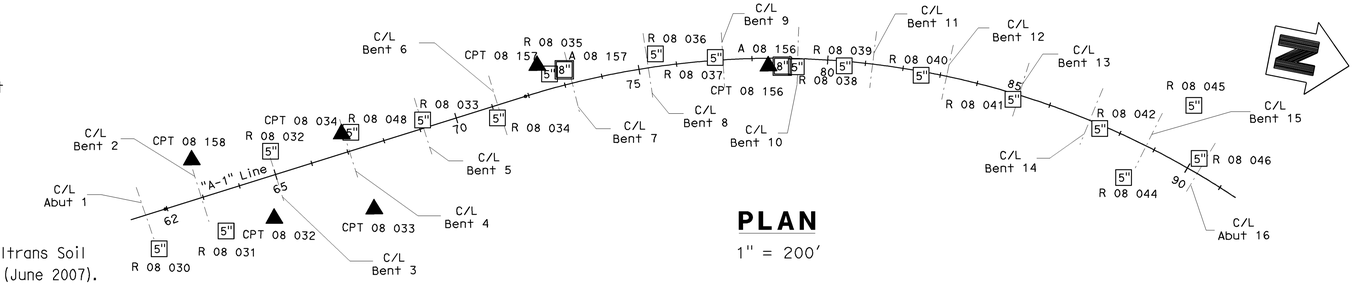

PLAN

1" = 200'

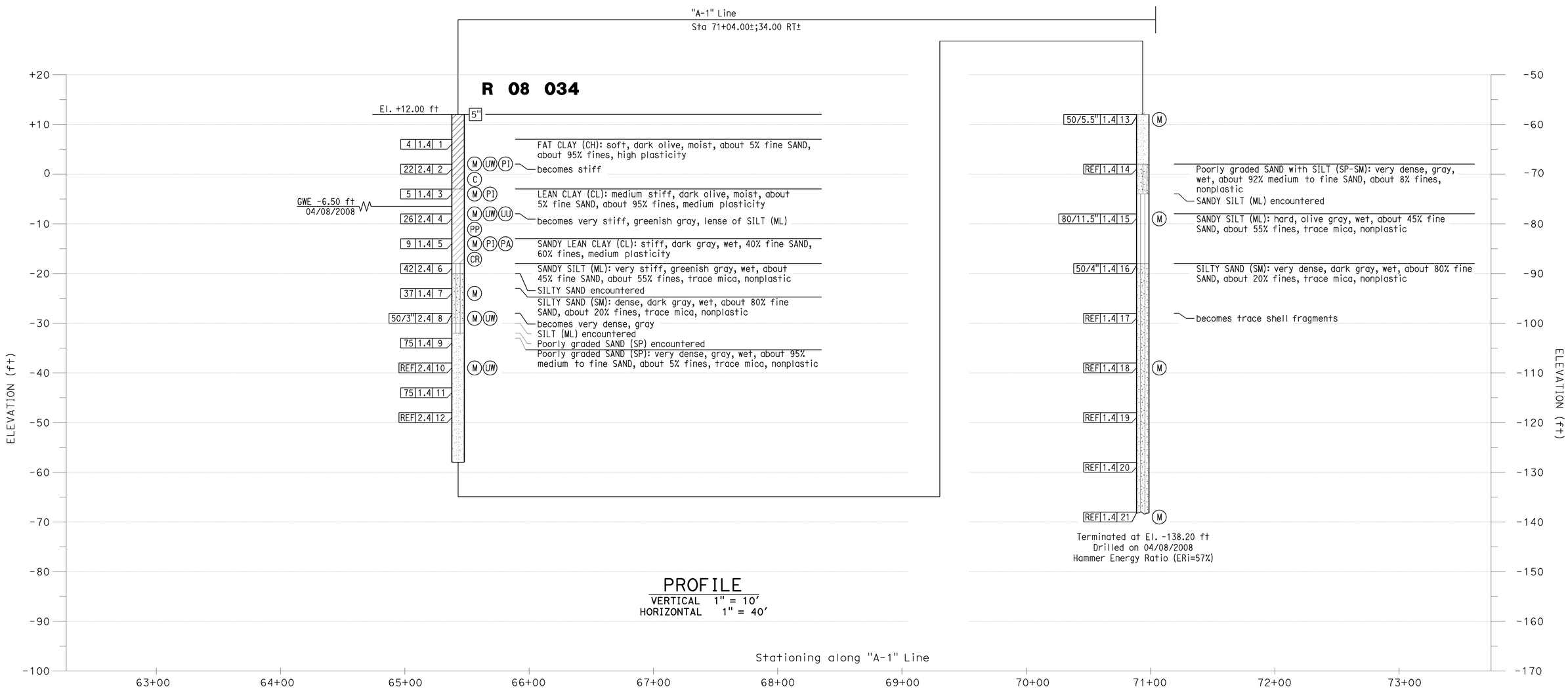

PROFILE

VERTICAL 1" = 10'
HORIZONTAL 1" = 40'

Sudhakar Vatti DESIGN OVERSIGHT Sudhakar Vatti 8-10-09 SIGN OFF DATE	DRAWN BY: J.Fang CHECKED BY: K.Pratheepan	FIELD INVESTIGATION BY: R.Jie	PREPARED FOR THE STATE OF CALIFORNIA DEPARTMENT OF TRANSPORTATION	G.J.Gunaranjan PROJECT ENGINEER	BRIDGE NO. 55-1098E POST MILE 24.02	405/605 HOV CONNECTOR LOG OF TEST BORINGS NO. 7

OSF CIVIL LOG OF TEST BORINGS SHEET (ENGLISH) (REV. 2-25-05)

ORIGINAL SCALE IN INCHES FOR REDUCED PLANS 0 1 2 3

CU 12235
EA 071631

DISREGARD PRINTS BEARING EARLIER REVISION DATES

REVISION DATES (PRELIMINARY STAGE ONLY) 10/25/08 03/23/09 04/06/09 07/27/09

SHEET 76 OF 87

FILE => 55-1098e-z-ltb07.dgn

USERNAME => rfriehard DATE PLOTTED => 03-FEB-2010 TIME PLOTTED => 10:51

DIST	COUNTY	ROUTE	POST MILES TOTAL PROJECT	SHEET No	TOTAL SHEETS
12	Ora	22,405, 605	R0.3/R0.9 22.3/24.0,3.0/R1.6	1648	1929

REGISTERED CIVIL ENGINEER 07/27/09 DATE

2-1-10
PLANS APPROVAL DATE

REGISTERED PROFESSIONAL ENGINEER G.J.Gunaranjan No. C71758 Exp.12-31-09 CIVIL STATE OF CALIFORNIA

The State of California or its officers or agents shall not be responsible for the accuracy or completeness of electronic copies of this plan sheet.

OCTA
550 SOUTH MAIN STREET
ORANGE, CA 92863

EARTH MECHANICS, INC.
17660, NEWHOPE STREET, SUITE E
FOUNTAIN VALLEY, CA 92708

BENCHMARKS:

Monument: 1A-144-04

Described by OCS 2005 - Found 3.75" OCS aluminum benchmark disk stamped "1A-144-04", set in the southwesterly corner of a 4.4 ft by 4.4 ft concrete catch basin. Monument is located in the northeasterly corner of the intersection of Seal Beach Boulevard and St. Cloud Drive, 44 ft easterly of the centerline of Seal Beach Boulevard and 58 ft northerly of the centerline of St. Cloud Dr. Monument is set level with the sidewalk.

Elevation: 15.37 feet

NOTES:

(1) This LOTB sheet (Boring Record) was prepared in accordance with the Caltrans Soil and Rock Classification Logging, Classification and Presentation Manual (June 2007).

(2) 2.4" samples were taken using a California Modified Sampler.

(3) A rope and cat-head hammer system consisting of a hammer weight of 140 lbs falling a distance of 30" was used to advance the drive sampler.

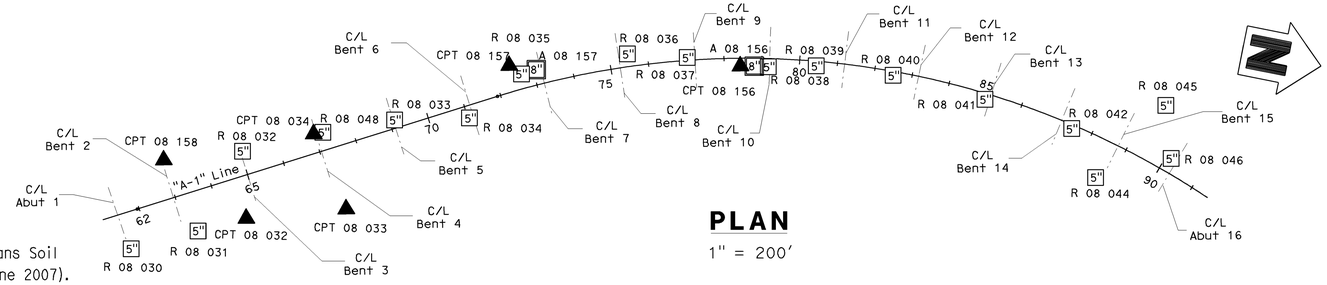

PLAN

1" = 200'

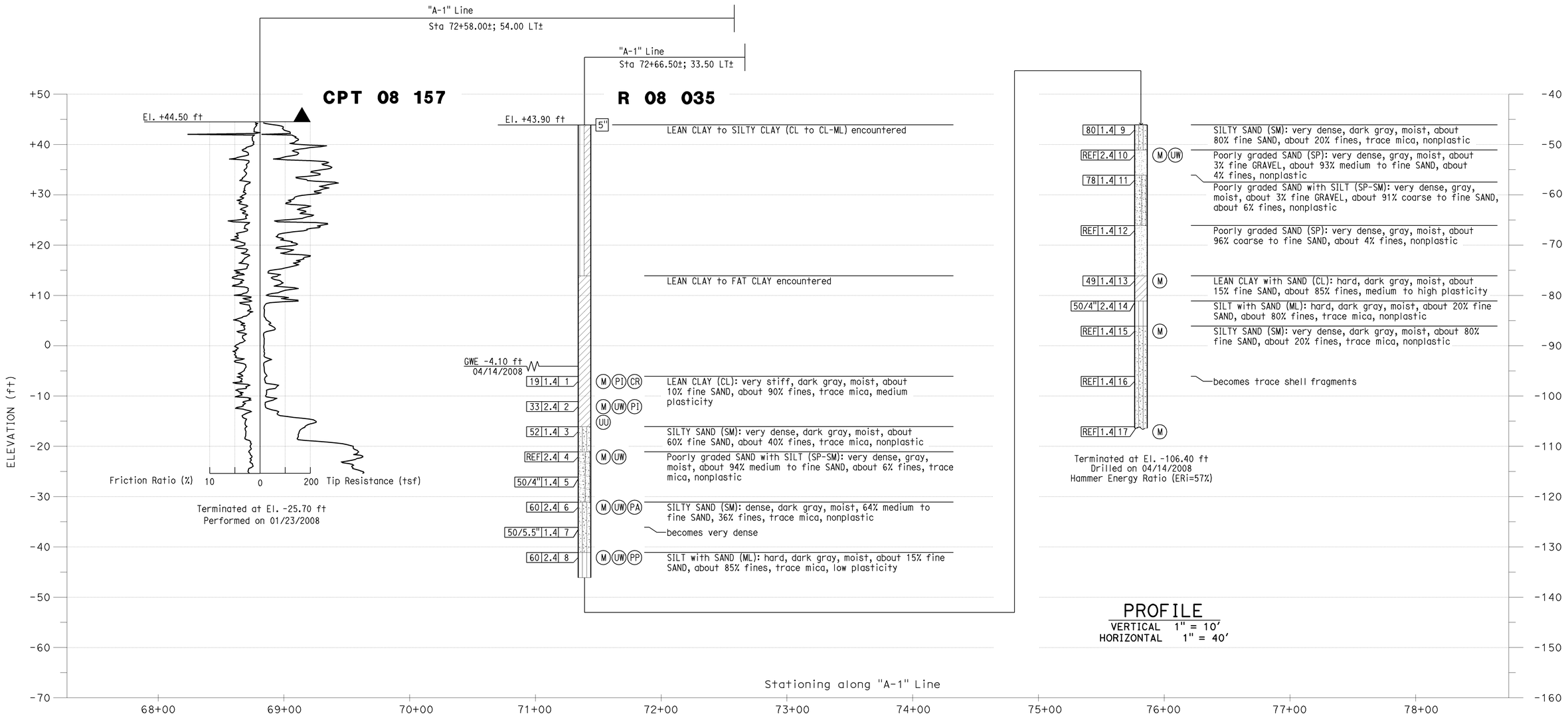

PROFILE

VERTICAL 1" = 10'
HORIZONTAL 1" = 40'

Sudhakar Vatti
DESIGN OVERSIGHT Sudhakar Vatti

8-10-09
SIGN OFF DATE

DRAWN BY: J.Fang

CHECKED BY: K.Pratheepan

FIELD INVESTIGATION BY:
R.Jie

PREPARED FOR THE
STATE OF CALIFORNIA
DEPARTMENT OF TRANSPORTATION

G.J.Gunaranjan
PROJECT ENGINEER

BRIDGE NO. 55-1098E
POST MILE 24.02

405/605 HOV CONNECTOR

LOG OF TEST BORINGS NO. 8

OSF CIVIL LOG OF TEST BORINGS SHEET (ENGLISH) (REV. 2-25-05)

ORIGINAL SCALE IN INCHES FOR REDUCED PLANS 0 1 2 3

CU 12235
EA 071631

DISREGARD PRINTS BEARING EARLIER REVISION DATES

REVISION DATES (PRELIMINARY STAGE ONLY) 10/15/08 03/25/09 04/06/09 07/21/09

SHEET 77 OF 87

FILE => 55-1098e-z-lltb08.dgn

USERNAME => rfriehard DATE PLOTTED => 03-FEB-2010 TIME PLOTTED => 10:51

DIST	COUNTY	ROUTE	POST MILES TOTAL PROJECT	SHEET No	TOTAL SHEETS
12	Ora	22,405, 605	R0.3/R0.9, 22.3/24.0,3.0/R1.6	1649	1929

REGISTERED CIVIL ENGINEER 07/27/09 DATE

2-1-10
PLANS APPROVAL DATE

REGISTERED PROFESSIONAL ENGINEER G.J.Gunaranjan No. C71758 Exp.12-31-09 CIVIL STATE OF CALIFORNIA

The State of California or its officers or agents shall not be responsible for the accuracy or completeness of electronic copies of this plan sheet.

OCTA
550 SOUTH MAIN STREET
ORANGE, CA 92863

EARTH MECHANICS, INC.
17660, NEWHOPE STREET, SUITE E
FOUNTAIN VALLEY, CA 92708

BENCHMARKS:

Monument: 1A-144-04

Described by OCS 2005 - Found 3.75" OCS aluminum benchmark disk stamped "1A-144-04", set in the southwesterly corner of a 4.4 ft by 4.4 ft concrete catch basin. Monument is located in the northeasterly corner of the intersection of Seal Beach Boulevard and St. Cloud Drive, 44 ft easterly of the centerline of Seal Beach Boulevard and 58 ft northerly of the centerline of St. Cloud Dr. Monument is set level with the sidewalk.

Elevation: 15.37 feet

NOTES:

(1) This LOTB sheet (Boring Record) was prepared in accordance with the Caltrans Soil and Rock Classification Logging, Classification and Presentation Manual (June 2007).

(2) 2.4" samples were taken using a California Modified Sampler.

(3) A rope and cat-head hammer system consisting of a hammer weight of 140 lbs falling a distance of 30" was used to advance the drive sampler.

(4) An automatic trip hammer system consisting of a hammer weight of 140 lbs falling a distance of 30" was used to advance the drive sampler.

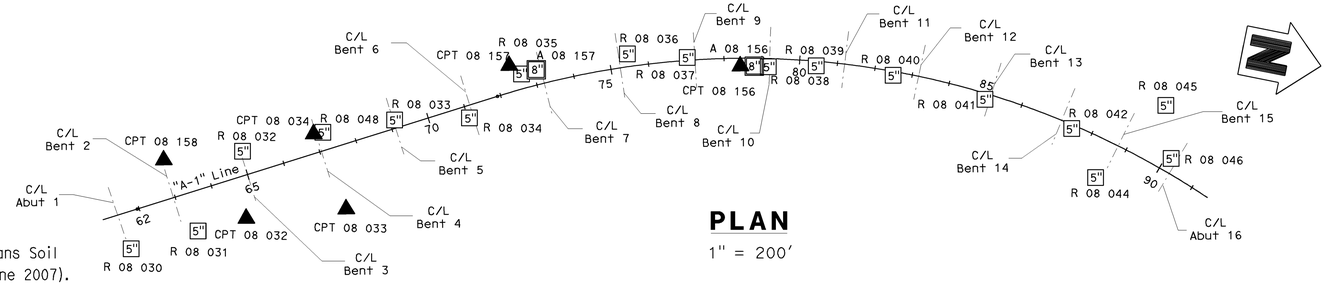

PLAN

1" = 200'

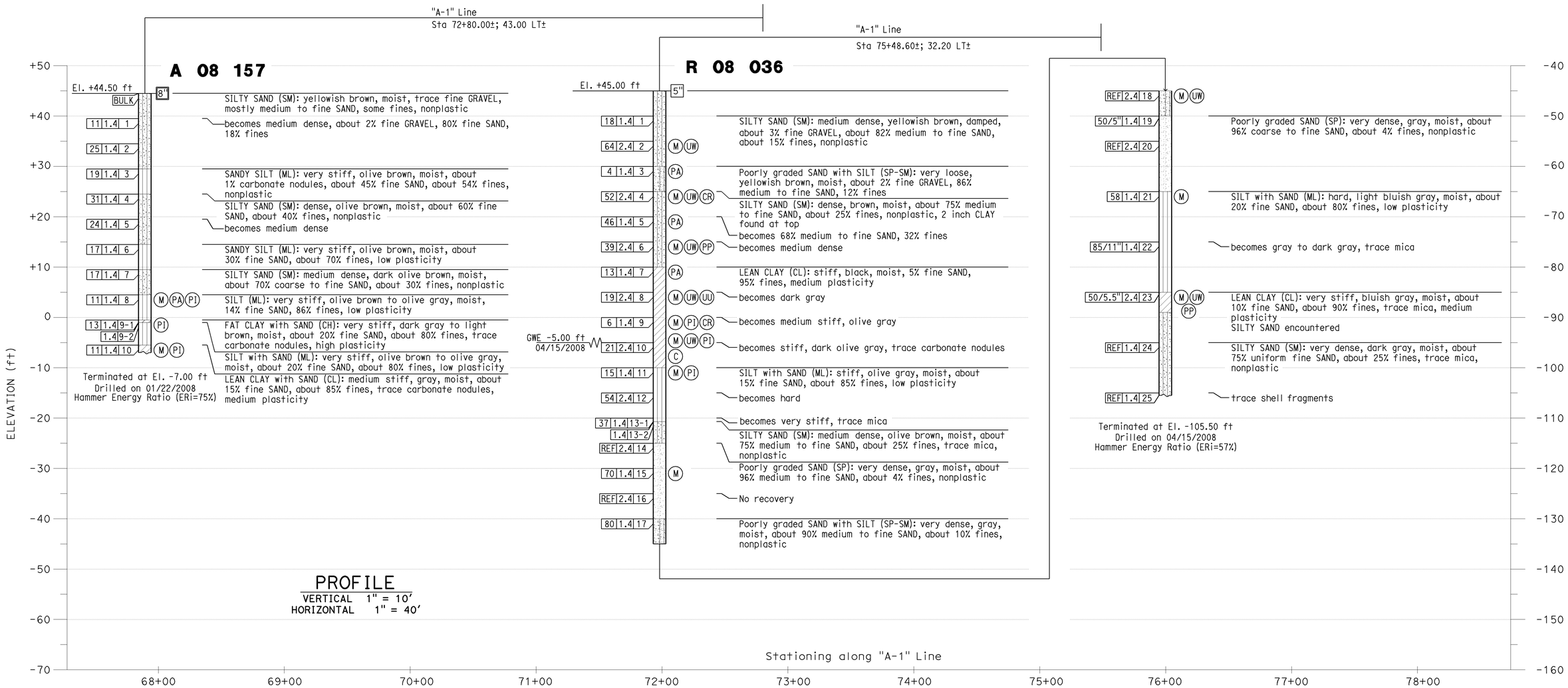

PROFILE

VERTICAL 1" = 10'
HORIZONTAL 1" = 40'

Sudhakar Vatti
DESIGN OVERSIGHT Sudhakar Vatti

8-10-09
SIGN OFF DATE

DRAWN BY: J.Fang

CHECKED BY: K.Pratheepan

FIELD INVESTIGATION BY:
R.Jie

PREPARED FOR THE STATE OF CALIFORNIA DEPARTMENT OF TRANSPORTATION

G.J.Gunaranjan
PROJECT ENGINEER

BRIDGE NO. 55-1098E
POST MILE 24.02

405/605 HOV CONNECTOR

LOG OF TEST BORINGS NO. 9

OSF CIVIL LOG OF TEST BORINGS SHEET (ENGLISH) (REV. 2-25-05)

ORIGINAL SCALE IN INCHES FOR REDUCED PLANS 0 1 2 3

CU 12235
EA 071631

DISREGARD PRINTS BEARING EARLIER REVISION DATES

REVISION DATES (PRELIMINARY STAGE ONLY) 10/15/08 03/23/09 04/06/09 07/21/09

SHEET 78 OF 87

FILE => 55-1098e-z-1tb09.dgn

USERNAME => trlenard DATE PLOTTED => 03-FEB-2010 TIME PLOTTED => 10:51

BENCHMARKS:

Monument: 1A-144-04

Described by OCS 2005 - Found 3.75" OCS aluminum benchmark disk stamped "1A-144-04", set in the southwesterly corner of a 4.4 ft by 4.4 ft concrete catch basin. Monument is located in the northeasterly corner of the intersection of Seal Beach Boulevard and St. Cloud Drive, 44 ft easterly of the centerline of Seal Beach Boulevard and 58 ft northerly of the centerline of St. Cloud Dr. Monument is set level with the sidewalk. Elevation: 15.37 feet

NOTES:

(1) This LOTB sheet (Boring Record) was prepared in accordance with the Caltrans Soil and Rock Classification Logging, Classification and Presentation Manual (June 2007).

(2) 2.4" samples were taken using a California Modified Sampler.

(3) A rope and cat-head hammer system consisting of a hammer weight of 140 lbs falling a distance of 30" was used to advance the drive sampler.

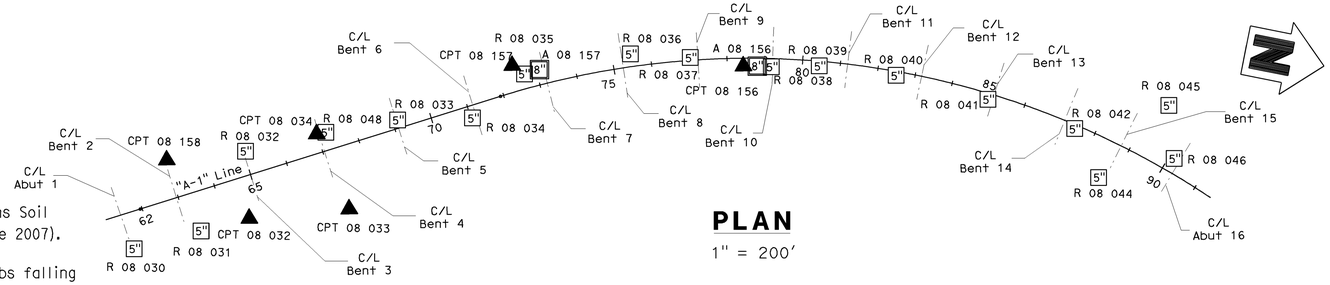

PLAN

1" = 200'

DIST	COUNTY	ROUTE	POST MILES TOTAL PROJECT	SHEET No	TOTAL SHEETS
12	Ora	22,405, 605	R0.3/R0.9, 22.3/24.0,3.0/R1.6	1650	1929

REGISTERED CIVIL ENGINEER — DATE 07/27/09

2-1-10
PLANS APPROVAL DATE

REGISTERED PROFESSIONAL ENGINEER G.J.Gunaranjan No. C71758 Exp.12-31-09 CIVIL STATE OF CALIFORNIA

The State of California or its officers or agents shall not be responsible for the accuracy or completeness of electronic copies of this plan sheet.

OCTA
550 SOUTH MAIN STREET
ORANGE, CA 92863

EARTH MECHANICS, INC.
17660, NEWHOPE STREET, SUITE E
FOUNTAIN VALLEY, CA 92708

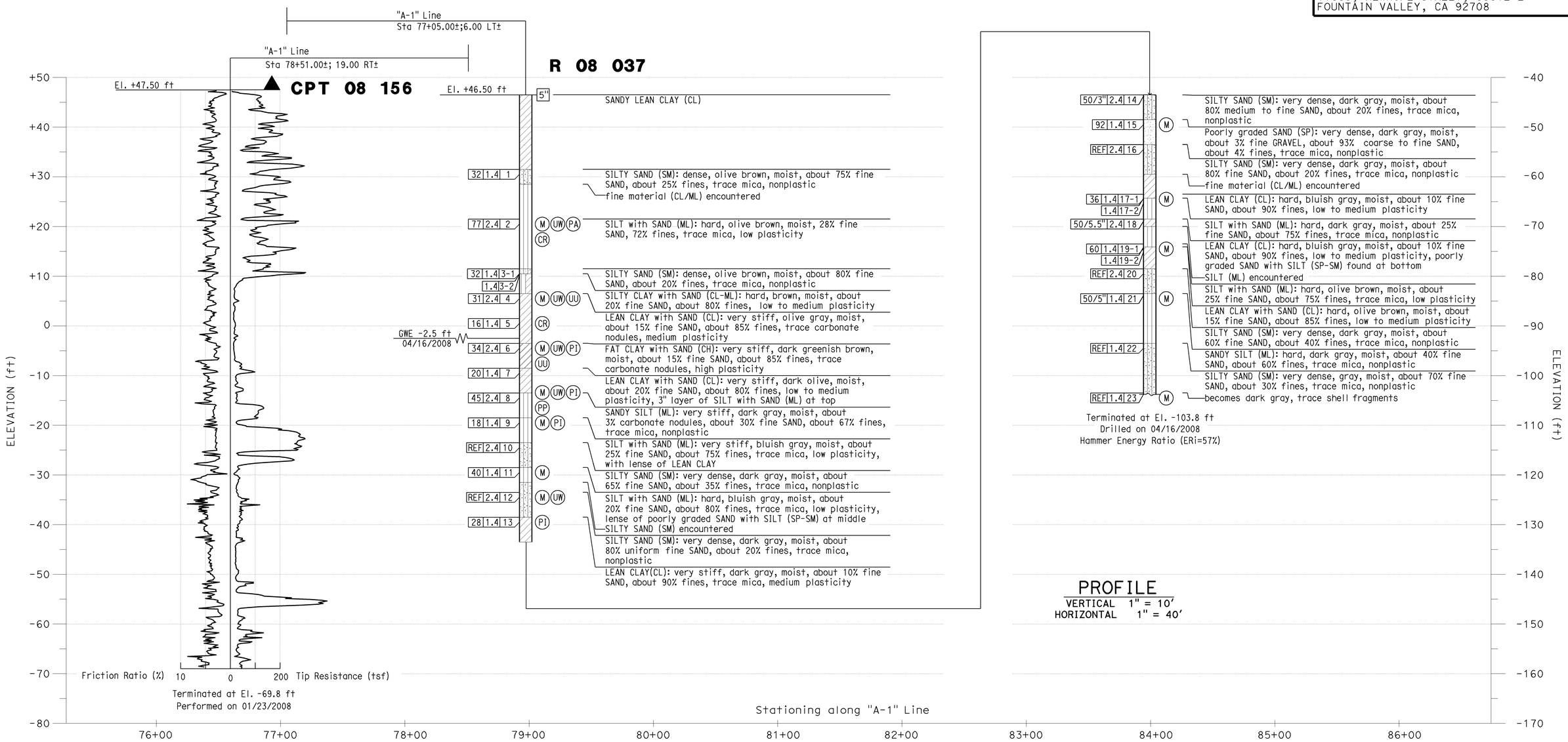

PROFILE

VERTICAL 1" = 10'
HORIZONTAL 1" = 40'

Sudhakar Vatti
DESIGN OVERSIGHT Sudhakar Vatti

8-10-09
SIGN OFF DATE

DRAWN BY: J.Fang

CHECKED BY: K.Pratheepan

FIELD INVESTIGATION BY:
R.Jie

PREPARED FOR THE STATE OF CALIFORNIA DEPARTMENT OF TRANSPORTATION

G.J.Gunaranjan
PROJECT ENGINEER

BRIDGE NO. 55-1098E
POST MILE 24.02

405/605 HOV CONNECTOR

LOG OF TEST BORINGS NO. 10

OSF CIVIL LOG OF TEST BORINGS SHEET (ENGLISH) (REV. 2-25-05)

ORIGINAL SCALE IN INCHES FOR REDUCED PLANS 0 1 2 3

CU 12235
EA 071631

DISREGARD PRINTS BEARING EARLIER REVISION DATES

REVISION DATES (PRELIMINARY STAGE ONLY) 10/25/08 03/25/09 04/06/09 07/21/09

SHEET 79 OF 87

FILE => 55-1098e-z-1tb10.dgn

USERNAME => friehard DATE PLOTTED => 03-FEB-2010 TIME PLOTTED => 10:51

DIST	COUNTY	ROUTE	POST MILES TOTAL PROJECT	SHEET No	TOTAL SHEETS
12	Ora	22,405, 605	R0.3/R0.9, 22.3/24.0,3.0/R1.6	1651	1929

REGISTERED CIVIL ENGINEER 07/27/09 DATE

2-1-10
PLANS APPROVAL DATE

REGISTERED PROFESSIONAL ENGINEER G.J.Gunaranjan No. C71758 Exp.12-31-09 CIVIL STATE OF CALIFORNIA

The State of California or its officers or agents shall not be responsible for the accuracy or completeness of electronic copies of this plan sheet.

OCTA
550 SOUTH MAIN STREET
ORANGE, CA 92863

EARTH MECHANICS, INC.
17660, NEWHOPE STREET, SUITE E
FOUNTAIN VALLEY, CA 92708

BENCHMARKS:

Monument: 1A-144-04

Described by OCS 2005 - Found 3.75" OCS aluminum benchmark disk stamped "1A-144-04", set in the southwesterly corner of a 4.4 ft by 4.4 ft concrete catch basin. Monument is located in the northeasterly corner of the intersection of Seal Beach Boulevard and St. Cloud Drive, 44 ft easterly of the centerline of Seal Beach Boulevard and 58 ft northerly of the centerline of St. Cloud Dr. Monument is set level with the sidewalk.

Elevation: 15.37 feet

NOTES:

(1) This LOTB sheet (Boring Record) was prepared in accordance with the Caltrans Soil and Rock Classification Logging, Classification and Presentation Manual (June 2007).

(2) 2.4" samples were taken using a California Modified Sampler.

(3) A rope and cat-head hammer system consisting of a hammer weight of 140 lbs falling a distance of 30" was used to advance the drive sampler.

(4) An automatic trip hammer system consisting of a hammer weight of 140 lbs falling a distance of 30" was used to advance the drive sampler.

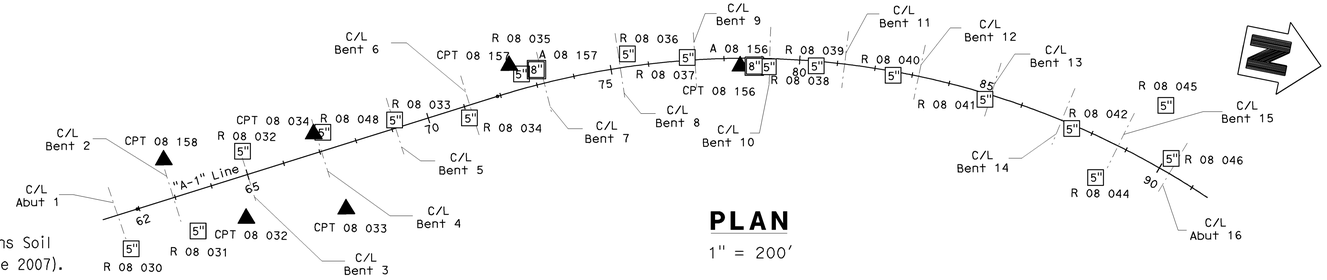

PLAN

1" = 200'

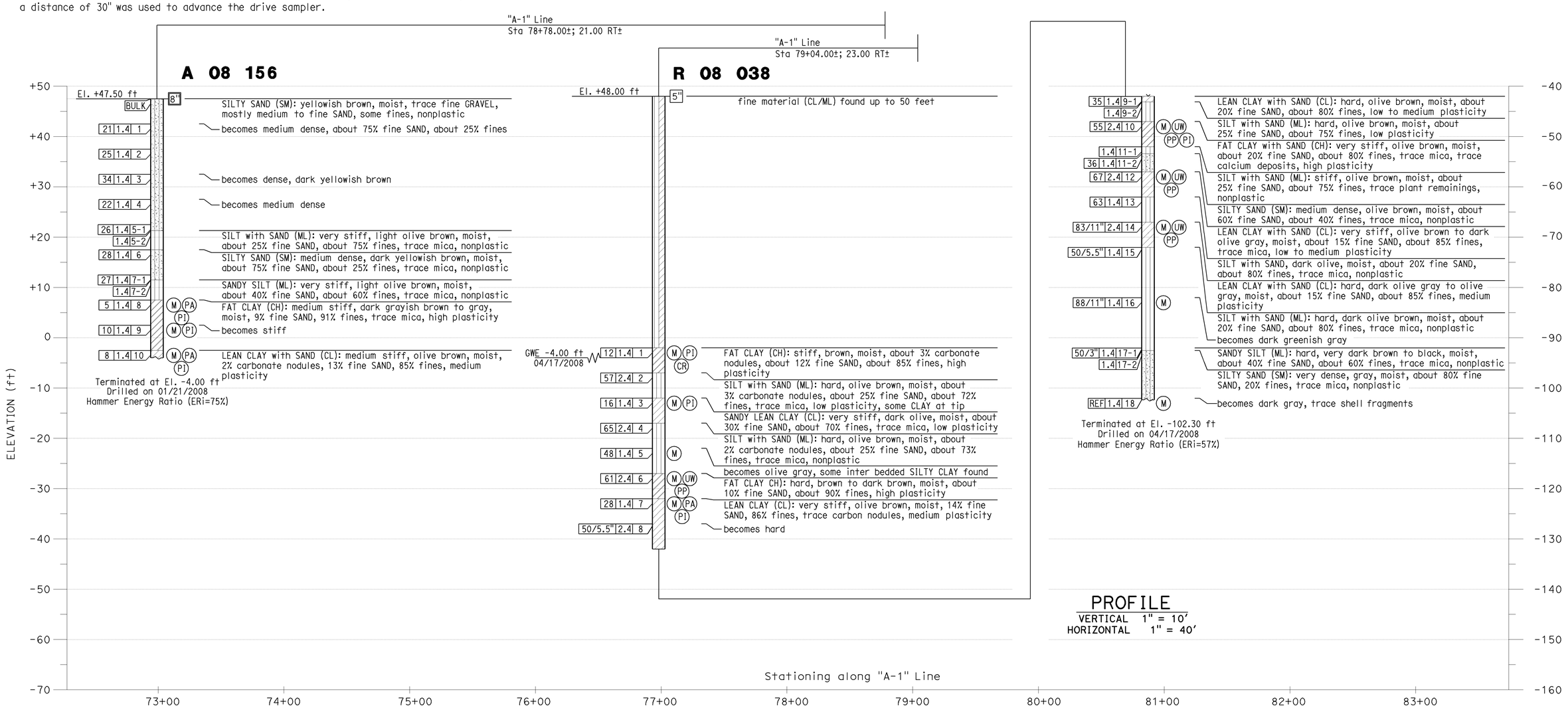

PROFILE

VERTICAL 1" = 10'
HORIZONTAL 1" = 40'

Sudhakar Vatti
DESIGN OVERSIGHT Sudhakar Vatti

8-10-09
SIGN OFF DATE

DRAWN BY: J.Fang

CHECKED BY: K.Pratheepan

FIELD INVESTIGATION BY:
R.Jie

PREPARED FOR THE STATE OF CALIFORNIA DEPARTMENT OF TRANSPORTATION

G.J.Gunaranjan
PROJECT ENGINEER

BRIDGE NO. 55-1098E
POST MILE 24.02

405/605 HOV CONNECTOR

LOG OF TEST BORINGS NO. 11

OSF CIVIL LOG OF TEST BORINGS SHEET (ENGLISH) (REV. 2-25-05)

ORIGINAL SCALE IN INCHES FOR REDUCED PLANS 0 1 2 3

CU 12235
EA 071631

DISREGARD PRINTS BEARING EARLIER REVISION DATES

REVISION DATES (PRELIMINARY STAGE ONLY) 10/15/08 03/23/09 04/06/09 07/27/09

SHEET 80 OF 87

FILE => 55-1098e-z-ltb11.dgn

USERNAME => rtrenord DATE PLOTTED => 03-FEB-2010 TIME PLOTTED => 10:52

DIST	COUNTY	ROUTE	POST MILES TOTAL PROJECT	SHEET No	TOTAL SHEETS
12	Ora	22,405, 605	R0.3/R0.9, 22.3/24.0,3.0/R1.6	1652	1929

REGISTERED CIVIL ENGINEER 07/27/09 DATE

2-1-10
PLANS APPROVAL DATE

REGISTERED PROFESSIONAL ENGINEER G.J.Gunaranjan No. C71758 Exp.12-31-09 CIVIL STATE OF CALIFORNIA

The State of California or its officers or agents shall not be responsible for the accuracy or completeness of electronic copies of this plan sheet.

OCTA
550 SOUTH MAIN STREET
ORANGE, CA 92863

EARTH MECHANICS, INC.
17660, NEWHOPE STREET, SUITE E
FOUNTAIN VALLEY, CA 92708

BENCHMARKS:

Monument: 1A-144-04

Described by OCS 2005 - Found 3.75" OCS aluminum benchmark disk stamped "1A-144-04", set in the southwesterly corner of a 4.4 ft by 4.4 ft concrete catch basin. Monument is located in the northeasterly corner of the intersection of Seal Beach Boulevard and St. Cloud Drive, 44 ft easterly of the centerline of Seal Beach Boulevard and 58 ft northerly of the centerline of St. Cloud Dr. Monument is set level with the sidewalk.

Elevation: 15.37 feet

NOTES:

(1) This LOTB sheet (Boring Record) was prepared in accordance with the Caltrans Soil and Rock Classification Logging, Classification and Presentation Manual (June 2007).

(2) 2.4" samples were taken using a California Modified Sampler.

(3) A rope and cat-head hammer system consisting of a hammer weight of 140 lbs falling a distance of 30" was used to advance the drive sampler.

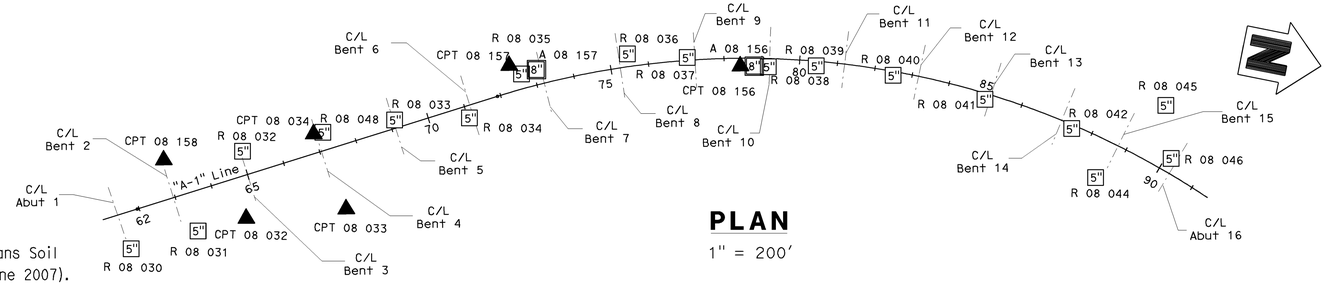

PLAN

1" = 200'

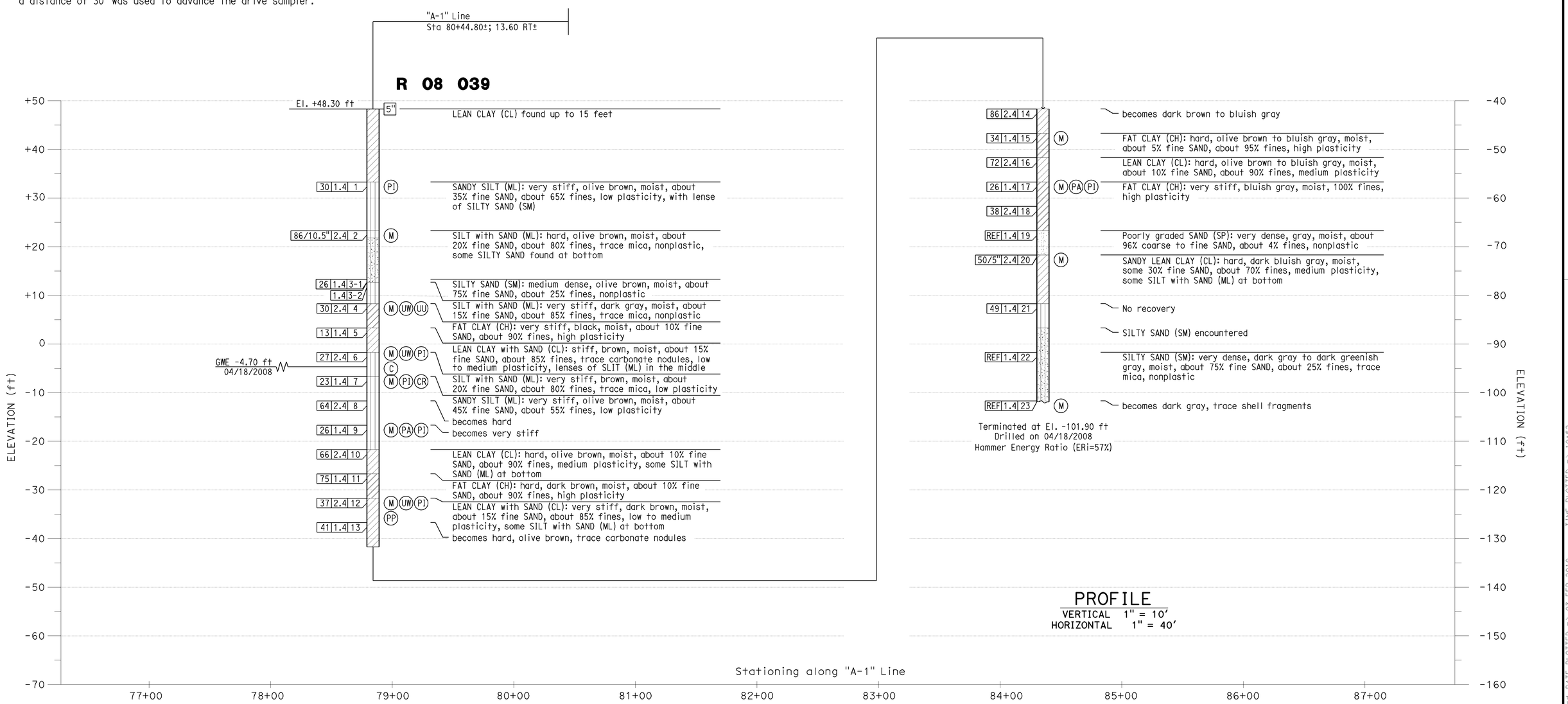

PROFILE

VERTICAL 1" = 10'
HORIZONTAL 1" = 40'

Sudhakar Vatti
DESIGN OVERSIGHT Sudhakar Vatti
8-10-09
SIGN OFF DATE

DRAWN BY: J.Fang
CHECKED BY: K.Pratheepan

FIELD INVESTIGATION BY:
R.Jie

PREPARED FOR THE STATE OF CALIFORNIA DEPARTMENT OF TRANSPORTATION

G.J.Gunaranjan
PROJECT ENGINEER

BRIDGE NO. 55-1098E
POST MILE 24.02

405/605 HOV CONNECTOR

LOG OF TEST BORINGS NO. 12

OSF CIVIL LOG OF TEST BORINGS SHEET (ENGLISH) (REV. 2-25-05)

ORIGINAL SCALE IN INCHES FOR REDUCED PLANS 0 1 2 3

CU 12235
EA 071631

DISREGARD PRINTS BEARING EARLIER REVISION DATES

REVISION DATES (PRELIMINARY STAGE ONLY) 10/15/08 03/25/09 04/06/09 07/27/09

SHEET 81 OF 87

FILE => 55-1098e-z-lttb12.dgn

USERNAME => rtrenard DATE PLOTTED => 03-FEB-2010 TIME PLOTTED => 10:52

DIST	COUNTY	ROUTE	POST MILES TOTAL PROJECT	SHEET No	TOTAL SHEETS
12	Ora	22,405, 605	R0.3/R0.9, 22.3/24.0,3.0/R1.6	1653	1929

REGISTERED CIVIL ENGINEER 07/27/09 DATE

2-1-10
PLANS APPROVAL DATE

REGISTERED PROFESSIONAL ENGINEER G.J.Gunaranjan No. C71758 Exp.12-31-09 CIVIL STATE OF CALIFORNIA

The State of California or its officers or agents shall not be responsible for the accuracy or completeness of electronic copies of this plan sheet.

OCTA
550 SOUTH MAIN STREET
ORANGE, CA 92863

EARTH MECHANICS, INC.
17660, NEWHOPE STREET, SUITE E
FOUNTAIN VALLEY, CA 92708

BENCHMARKS:

Monument: 1A-144-04

Described by OCS 2005 - Found 3.75" OCS aluminum benchmark disk stamped "1A-144-04", set in the southwesterly corner of a 4.4 ft by 4.4 ft concrete catch basin. Monument is located in the northeasterly corner of the intersection of Seal Beach Boulevard and St. Cloud Drive, 44 ft easterly of the centerline of Seal Beach Boulevard and 58 ft northerly of the centerline of St. Cloud Dr. Monument is set level with the sidewalk.

Elevation: 15.37 feet

NOTES:

(1) This LOTB sheet (Boring Record) was prepared in accordance with the Caltrans Soil and Rock Classification Logging, Classification and Presentation Manual (June 2007).

(2) 2.4" samples were taken using a California Modified Sampler.

(3) A rope and cat-head hammer system consisting of a hammer weight of 140 lbs falling a distance of 30" was used to advance the drive sampler.

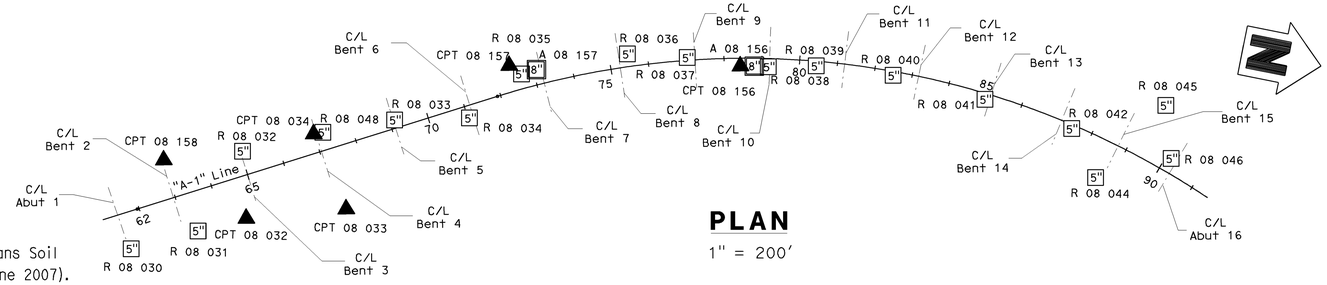

PLAN

1" = 200'

"A-1" Line
Sta 82+48.90±; 12.10 RT±

R 08 040

El. +48.70 ft

GWE -0.80 ft
04/21/2008

Elev.	Blows	Moisture	Sample	Description
			5"	fine material (CL/ML) found up to 15 feet
	45	1.4	1	SILTY SAND (SM): dense, brown, moist, about 60% fine SAND, about 40% fines, trace mica, nonplastic
	68	2.4	2 (M)	SANDY SILT (ML): hard, brown, moist, about 40% fine SAND, about 60% fines, trace mica, nonplastic
	20	1.4	3	LEAN CLAY with SAND (CL): very stiff, strong brown, moist, about 25% fine SAND, about 75% fines, medium plasticity
	46	2.4	4 (M UW UU)	SILTY CLAY with SAND (CL-ML): very stiff, black, moist, about 15% fine SAND, about 85% fines, trace mica, low plasticity
	23	1.4	5	LEAN CLAY with SAND (CL): very stiff, olive brown, moist, about 2% carbonate nodules, about 15% fine SAND, about 83% fines, trace mica, medium plasticity
	32	2.4	6 (M UW PI C)	
	18	1.4	7 (M PI CR)	SILT with SAND (ML): very stiff, olive brown, moist, about 20% fine SAND, about 80% fines, low plasticity
	46	2.4	8 (M UW UU)	becomes olive brown to olive gray
	37	1.4	9 (M)	SANDY SILT (ML): hard, olive brown to olive gray, moist, about 35% fine SAND, about 35% fines, trace mica, nonplastic
	85	2.4	10	LEAN CLAY with SAND (CL): hard, strong brown to greenish brown, moist, about 20% fine SAND, about 80% fines, trace mica, medium plasticity
	44	1.4	11 (M)	
	56	2.4	12	becomes with about 10% carbonate nodules
	26	1.4	13 (M PI PA)	FAT CLAY (CH); very stiff, strong brown, moist, 2% carbonate nodules, 5% fine SAND, 93% fines, high plasticity
	58	2.4	14	LEAN CLAY with SAND (CL): hard, olive brown, moist, about 15% fine SAND, about 85% fines, medium plasticity, some SILT with SAND (ML) at bottom
	25	1.4	15 (M)	becomes very stiff, olive brown to olive gray
	50	2.4	16	becomes hard, olive brown
	48	1.4	17 (M)	FAT CLAY (CH): hard, olive brown to light olive gray, moist, about 10% fine SAND, about 90% fines, high plasticity
	50/6"	2.4	18	SILT with SAND (ML): hard, dark olive brown to dark olive, moist, about 2% carbonate nodules, about 15% fine SAND, about 83% fines, trace mica, low plasticity, some nonplastic SANDY SILT (ML) found at bottom
	85	1.4	19	becomes dark olive gray, nonplastic
	50/4.5"	2.4	20 (M UW PP)	becomes dark olive
	59	1.4	21	becomes dark greenish gray
				SILTY SAND (SM) encountered
	REF	1.4	22 (M)	SILTY SAND (SM): very dense, dark gray, moist, about 80% fine SAND, about 20 fines, trace mica, nonplastic
	REF	1.4	23	

Terminated at El. -101.60 ft
Drilled on 04/21/2008
Hammer Energy Ratio (ERi=57%)

ELEVATION (ft): +50, +40, +30, +20, +10, 0, -10, -20, -30, -40, -50, -60, -70

ELEVATION (ft): -40, -50, -60, -70, -80, -90, -100, -110, -120, -130, -140, -150, -160

Stationing along "A-1" Line: 77+00, 78+00, 79+00, 80+00, 81+00, 82+00, 83+00, 84+00, 85+00, 86+00, 87+00

PROFILE

VERTICAL 1" = 10'
HORIZONTAL 1" = 40'

Sudhakar Vatti
DESIGN OVERSIGHT Sudhakar Vatti

8-10-09
SIGN OFF DATE

DRAWN BY: J.Fang

CHECKED BY: K.Pratheepan

FIELD INVESTIGATION BY:
R.Jie

PREPARED FOR THE STATE OF CALIFORNIA DEPARTMENT OF TRANSPORTATION

G.J.Gunaranjan
PROJECT ENGINEER

BRIDGE NO. 55-1098E
POST MILE 24.02

405/605 HOV CONNECTOR

LOG OF TEST BORINGS NO. 13

OSF CIVIL LOG OF TEST BORINGS SHEET (ENGLISH) (REV. 2-25-05)

ORIGINAL SCALE IN INCHES FOR REDUCED PLANS 0 1 2 3

CU 12235
EA 071631

DISREGARD PRINTS BEARING EARLIER REVISION DATES

REVISION DATES (PRELIMINARY STAGE ONLY) 10/25/08 03/23/09 04/06/09 07/21/09

SHEET 82 OF 87

FILE => 55-1098e-z-1tb13.dgn

USERNAME => friehard DATE PLOTTED => 03-FEB-2010 TIME PLOTTED => 10:52

DIST	COUNTY	ROUTE	POST MILES TOTAL PROJECT	SHEET No	TOTAL SHEETS
12	Ora	22,405, 605	R0.3/R0.9, 22.3/24.0,3.0/R1.6	1654	1929

REGISTERED CIVIL ENGINEER 07/27/09 DATE

2-1-10
PLANS APPROVAL DATE

REGISTERED PROFESSIONAL ENGINEER G.J.Gunaranjan No. C71758 Exp.12-31-09 CIVIL STATE OF CALIFORNIA

The State of California or its officers or agents shall not be responsible for the accuracy or completeness of electronic copies of this plan sheet.

OCTA
550 SOUTH MAIN STREET
ORANGE, CA 92863

EARTH MECHANICS, INC.
17660, NEWHOPE STREET, SUITE E
FOUNTAIN VALLEY, CA 92708

BENCHMARKS:

Monument: 1A-144-04

Described by OCS 2005 - Found 3.75" OCS aluminum benchmark disk stamped "1A-144-04", set in the southwesterly corner of a 4.4 ft by 4.4 ft concrete catch basin. Monument is located in the northeasterly corner of the intersection of Seal Beach Boulevard and St. Cloud Drive, 44 ft easterly of the centerline of Seal Beach Boulevard and 58 ft northerly of the centerline of St. Cloud Dr. Monument is set level with the sidewalk.

Elevation: 15.37 feet

NOTES:

(1) This LOTB sheet (Boring Record) was prepared in accordance with the Caltrans Soil and Rock Classification Logging, Classification and Presentation Manual (June 2007).

(2) 2.4" samples were taken using a California Modified Sampler.

(3) A rope and cat-head hammer system consisting of a hammer weight of 140 lbs falling a distance of 30" was used to advance the drive sampler.

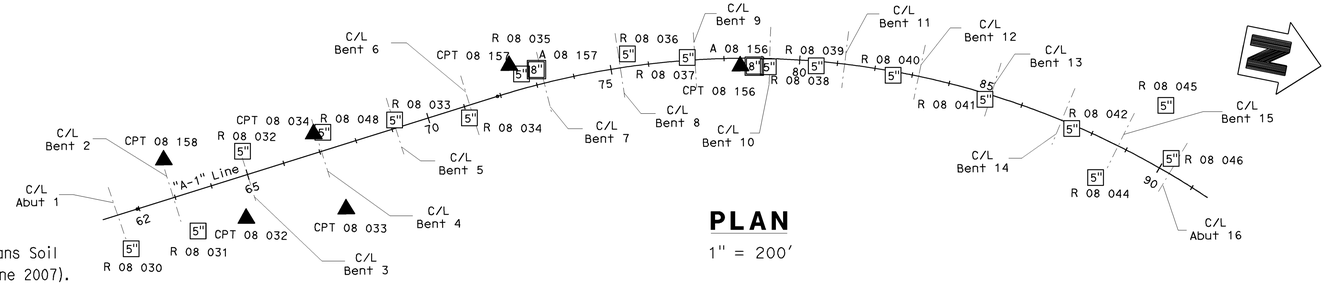

PLAN

1" = 200'

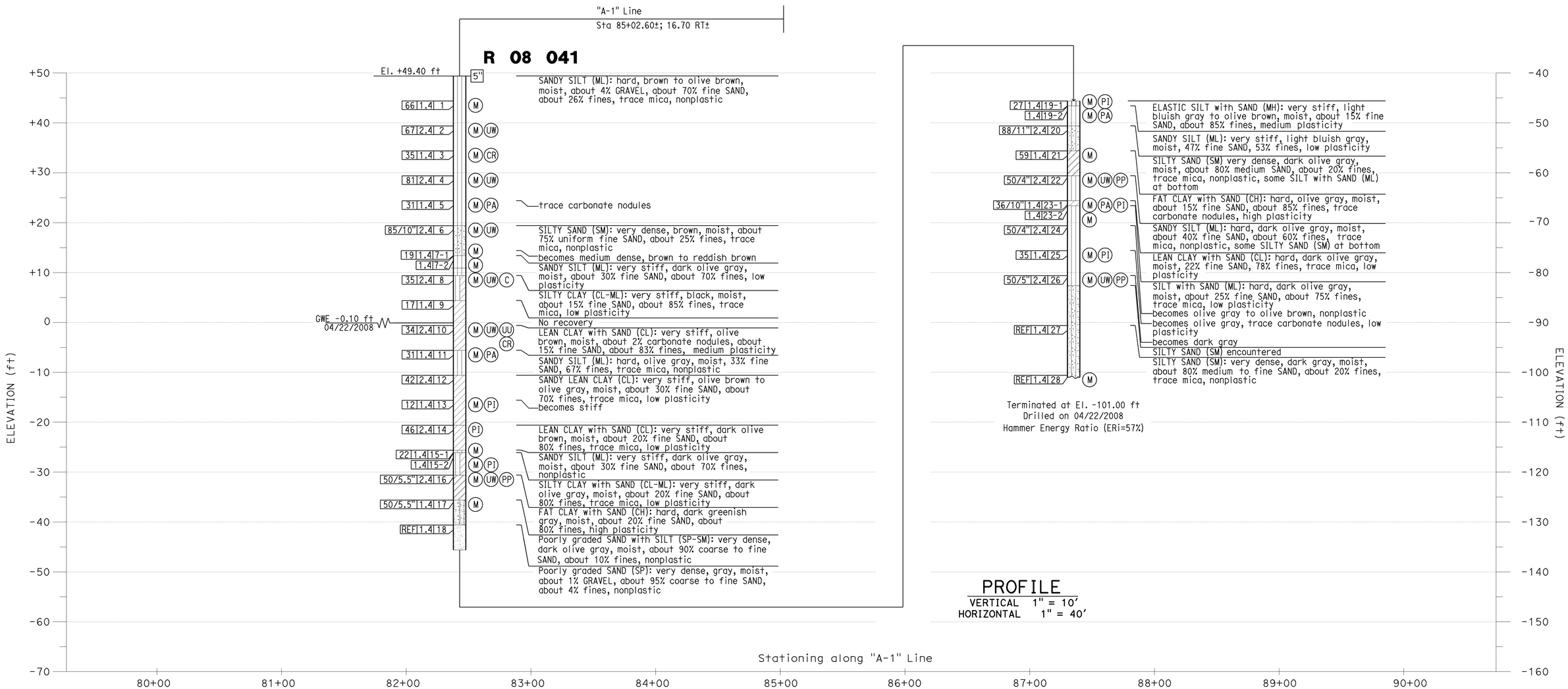

PROFILE

VERTICAL 1" = 10'
HORIZONTAL 1" = 40'

Sudhakar Vatti
DESIGN OVERSIGHT Sudhakar Vatti
8-10-09
SIGN OFF DATE

DRAWN BY: J.Fang
CHECKED BY: K.Pratheepan

FIELD INVESTIGATION BY:
R.Jie

PREPARED FOR THE STATE OF CALIFORNIA DEPARTMENT OF TRANSPORTATION

G.J.Gunaranjan
PROJECT ENGINEER

BRIDGE NO. 55-1098E
POST MILE 24.02

405/605 HOV CONNECTOR

LOG OF TEST BORINGS NO. 14

OSF CIVIL LOG OF TEST BORINGS SHEET (ENGLISH) (REV. 2-25-05)

ORIGINAL SCALE IN INCHES FOR REDUCED PLANS 0 1 2 3

CU 12235
EA 071631

DISREGARD PRINTS BEARING EARLIER REVISION DATES

REVISION DATES (PRELIMINARY STAGE ONLY) 10/15/08 03/23/09 04/06/09 07/21/09

SHEET 83 OF 87

FILE => 55-1098e-z-lltb14.dgn

USERNAME => rfriehard DATE PLOTTED => 03-FEB-2010 TIME PLOTTED => 10:52

BENCHMARKS:

Monument: 1A-144-04

Described by OCS 2005 - Found 3.75" OCS aluminum benchmark disk stamped "1A-144-04", set in the southwesterly corner of a 4.4 ft by 4.4 ft concrete catch basin. Monument is located in the northeasterly corner of the intersection of Seal Beach Boulevard and St. Cloud Drive, 44 ft easterly of the centerline of Seal Beach Boulevard and 58 ft northerly of the centerline of St. Cloud Dr. Monument is set level with the sidewalk.

Elevation: 15.37 feet

NOTES:

(1) This LOTB sheet (Boring Record) was prepared in accordance with the Caltrans Soil and Rock Classification Logging, Classification and Presentation Manual (June 2007).

(2) 2.4" samples were taken using a California Modified Sampler.

(3) A rope and cat-head hammer system consisting of a hammer weight of 140 lbs falling a distance of 30" was used to advance the drive sampler.

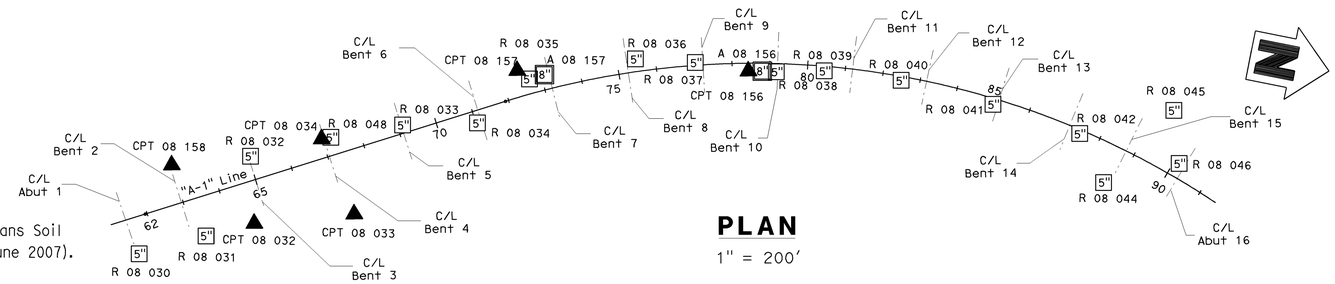

PLAN

1" = 200'

DIST	COUNTY	ROUTE	POST MILES TOTAL PROJECT	SHEET No	TOTAL SHEETS
12	Ora	22,405, 605	R0.3/R0.9, 22.3/24.0,3.0/R1.6	1655	1929

REGISTERED CIVIL ENGINEER 07/27/09 DATE

2-1-10
PLANS APPROVAL DATE

REGISTERED PROFESSIONAL ENGINEER G.J.Gunaranjan No. C71758 Exp.12-31-09 CIVIL STATE OF CALIFORNIA

The State of California or its officers or agents shall not be responsible for the accuracy or completeness of electronic copies of this plan sheet.

OCTA
550 SOUTH MAIN STREET
ORANGE, CA 92863

EARTH MECHANICS, INC.
17660, NEWHOPE STREET, SUITE E
FOUNTAIN VALLEY, CA 92708

R 08 042

"A-1" Line
Sta 87+45.30±; 12.20 RT±

El. +14.40 ft

GWE -6.60 ft 04/03/2008

Blows	Moisture	Dry Density	Sample	Description
			5"	3" Asphalt Concrete, 18" Base
4	1.4	1	M	SILTY CLAY (CL-ML): brown, moist, trace fine SAND, trace mica, low to medium plasticity
10	2.4	2	M UW UU	SILTY CLAY with SAND (CL-ML): soft, brown, moist, about 20% fine SAND, about 80% fines, trace mica, low plasticity; becomes medium stiff
6	1.4	3	PI CR	LEAN CLAY with SAND (CL): medium stiff, brown, moist, about 20% fine SAND, about 80% fines, low to medium plasticity
18	2.4	4	M UW PI PP	SILT with SAND (ML): stiff, olive brown, moist, about 20% fine SAND, about 80% fines, trace mica, low plasticity
11	1.4	5	M PA	SANDY SILT (ML): stiff, olive gray, moist, 1% GRAVEL, 31% fine SAND, 68% fines, trace mica, low plasticity
23	2.4	6	M UW UU	SILT with SAND (ML): stiff, olive brown, moist, about 25% fine SAND, about 75% fines, trace mica, nonplastic
13	1.4	7	M	SILTY SAND (SM): very dense, gray, moist, about 60% uniform fine SAND, 40% fines, trace mica, nonplastic
REF	2.4	8	M UW	Poorly graded SAND with SILT (SP-SM): dense, gray, moist, 93% fine to medium SAND, 7% fines, trace mica, nonplastic; becomes very dense
34	1.4	9	M PA	Poorly graded SAND (SP): very dense, gray, moist, about 96% fine to medium SAND, about 4% fines, nonplastic
REF	2.4	10	M UW	
50/5"	1.4	11		
REF	2.4	12	M UW	
54	1.4	13		
50/4"	2.4	14	M UW PP	LEAN CLAY (CL): hard, olive gray, moist, about 10% very fine SAND, about 90% fines, trace carbonate nodules, medium to high plasticity
81	1.4	15		SILT with SAND (ML): hard, olive brown, moist, about 25% fine SAND, about 75% fines, trace mica, nonplastic
50/5.5"	2.4	16	M UW PP	
49	1.4	17-1	M	SILTY CLAY with SAND (CL-ML): hard, olive gray, moist, about 15% fine SAND, about 85% fines, low plasticity
1.4	17-2			
50/5"	2.4	18		LEAN CLAY (CL): hard, olive brown, moist, about 10% fine SAND, about 90% fines, medium plasticity
REF	1.4	19	M	SILT with SAND (ML): hard, dark gray, moist, about 15% fine SAND, about 85% fines, trace mica, nonplastic
REF	2.4	20		SILTY SAND (SM): very dense, dark gray, moist, about 65% uniform fine SAND, about 35% fines, trace mica, nonplastic
REF	1.4	21	M	
				shell fragments encountered for 5 feet
REF	1.4	22	M	SANDY SILT (ML): hard, dark gray, moist, about 30% fine SAND, about 70% fines, trace mica, nonplastic

Terminated at El. -111.10 ft
Drilled on 04/03/2008
Hammer Energy Ratio (ERi=57%)

R 08 044

"A-1" Line
Sta 88+59.60±; 101.70 RT±

El. +20.30 ft

GWE -1.70 ft 03/31/2008

Blows	Moisture	Dry Density	Sample	Description
			5"	3.5" Asphalt concrete, 18" Base
70	1.4	1	M	SANDY CLAY (CL): brown, moist; SILTY SAND (SM): very dense, dark gray, moist, about 60% fine SAND, about 40% fines, trace mica, nonplastic
20	2.4	2	M UW UU PI PP	SILT with SAND (ML): stiff, dark gray, moist, about 15% fine SAND, about 85% fines, trace mica, nonplastic
6	1.4	3	M CR	LEAN CLAY with SAND (CL): medium stiff, dark brown, moist, about 15% fine SAND, 85% fines, medium plasticity; becomes stiff, olive gray
15	2.4	4	M UW PI UU	
7	1.4	5	M PI	SILT with SAND (ML): medium stiff, olive gray, moist, about 15% fine SAND, about 85% fines, trace carbonate nodules, trace mica, low plasticity; becomes stiff, gray
22	2.4	6	M UW PA UU	
8	1.4	7	M PI CR	becomes medium stiff
31	2.4	8	M UW PA PP	SILT (ML): very stiff, olive gray, moist, 2% GRAVEL, 12% fine SAND, 86% fines, low plasticity, some LEAN CLAY (CL) at top
34	1.4	9		SANDY SILT (ML): hard, olive gray, moist, about 35% fine SAND, about 65% fines, trace mica, nonplastic
50/5"	2.4	10	M UW	SILTY SAND (SM): very dense, gray, moist, about 75% fine SAND, about 25% fines, trace mica, nonplastic
64	1.4	11		Poorly graded SAND with SILT (SP-SM): very dense, gray, moist, about 94% fine to medium SAND, about 6% fines, nonplastic
REF	2.4	12	M UW	Well graded SAND (SW): very dense, gray, moist, about 12% GRAVEL, about 84% coarse to fine SAND, about 4% fines, nonplastic
73	1.4	13	M	Poorly graded SAND (SP): very dense, gray, moist, about 96% fine to medium SAND, about 4% fines, nonplastic
REF	2.4	14		
53	1.4	15	M PI	LEAN CLAY with SAND (CL): hard, olive gray, moist about 4% carbonate nodules, about 10% fine SAND, about 86% fines, medium plasticity
69	2.4	16		
28	1.4	17	M PI	LEAN CLAY (CL): very stiff, olive gray to olive brown, moist, trace fine SAND, mostly fines, trace mica, low to medium plasticity
50/5.5"	2.4	18		SILT with SAND (ML): hard, olive gray to olive brown, moist, about 15% fine SAND, about 85% fines, trace mica, low plasticity; becomes nonplastic
91	1.4	19	M	
REF	2.4	20		No recovery

Terminated at El. -79.90 ft
Drilled on 03/31/2008
Hammer Energy Ratio (ERi=57%)

PROFILE

VERTICAL 1" = 10'
HORIZONTAL 1" = 40'

ELEVATION (ft): +20, +10, 0, -10, -20, -30, -40, -50, -60, -70, -80, -90, -100, -110, -120

Stationing along "A-1" Line: 84+00, 85+00, 86+00, 87+00, 88+00, 89+00, 90+00, 91+00, 92+00, 93+00, 94+00

Sudhakar Vatti
DESIGN OVERSIGHT Sudhakar Vatti

8-10-09
SIGN OFF DATE

DRAWN BY: J.Fang

CHECKED BY: K.Pratheepan

FIELD INVESTIGATION BY:
R.Jie

PREPARED FOR THE STATE OF CALIFORNIA DEPARTMENT OF TRANSPORTATION

G.J.Gunaranjan
PROJECT ENGINEER

BRIDGE NO. 55-1098E
POST MILE 24.02

405/605 HOV CONNECTOR

LOG OF TEST BORINGS NO. 15

OSF CIVIL LOG OF TEST BORINGS SHEET (ENGLISH) (REV. 2-25-05)

ORIGINAL SCALE IN INCHES FOR REDUCED PLANS 0 1 2 3

CU 12235
EA 071631

DISREGARD PRINTS BEARING EARLIER REVISION DATES

REVISION DATES (PRELIMINARY STAGE ONLY) 10/15/08 03/27/09 04/06/09 07/27/09

SHEET 84 OF 87

FILE => 55-1098e-z-ltb15.dgn

USERNAME => rfriehard DATE PLOTTED => 03-FEB-2010 TIME PLOTTED => 10:52

DIST	COUNTY	ROUTE	POST MILES TOTAL PROJECT	SHEET No	TOTAL SHEETS
12	Ora	22,405, 605	R0.3/R0.9, 22.3/24.0,3.0/R1.6	1656	1929

REGISTERED CIVIL ENGINEER 07/27/09 DATE

2-1-10
PLANS APPROVAL DATE

REGISTERED PROFESSIONAL ENGINEER G.J.Gunaranjan No. C71758 Exp.12-31-09 CIVIL STATE OF CALIFORNIA

The State of California or its officers or agents shall not be responsible for the accuracy or completeness of electronic copies of this plan sheet.

OCTA
550 SOUTH MAIN STREET
ORANGE, CA 92863

EARTH MECHANICS, INC.
17660, NEWHOPE STREET, SUITE E
FOUNTAIN VALLEY, CA 92708

BENCHMARKS:

Monument: 1A-144-04

Described by OCS 2005 - Found 3.75" OCS aluminum benchmark disk stamped "1A-144-04", set in the southwesterly corner of a 4.4 ft by 4.4 ft concrete catch basin. Monument is located in the northeasterly corner of the intersection of Seal Beach Boulevard and St. Cloud Drive, 44 ft easterly of the centerline of Seal Beach Boulevard and 58 ft northerly of the centerline of St. Cloud Dr. Monument is set level with the sidewalk. Elevation: 15.37 feet

NOTES:

(1) This LOTB sheet (Boring Record) was prepared in accordance with the Caltrans Soil and Rock Classification Logging, Classification and Presentation Manual (June 2007).
(2) 2.4" samples were taken using a California Modified Sampler.
(3) A rope and cat-head hammer system consisting of a hammer weight of 140 lbs falling a distance of 30" was used to advance the drive sampler.

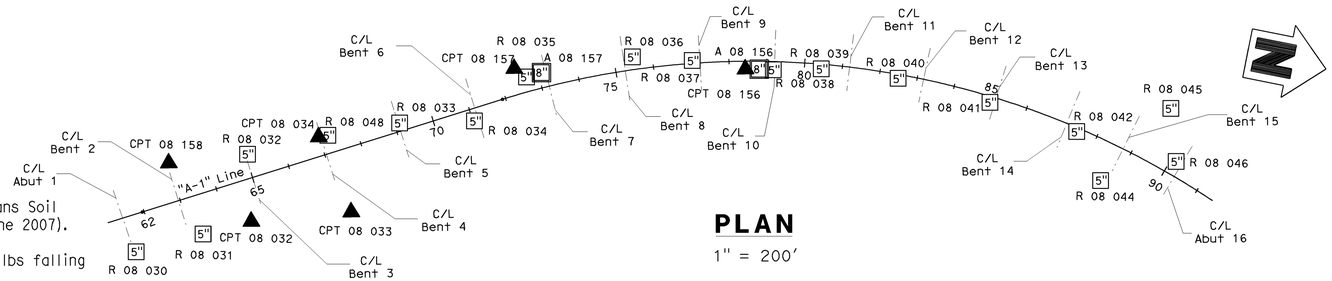

PLAN

1" = 200'

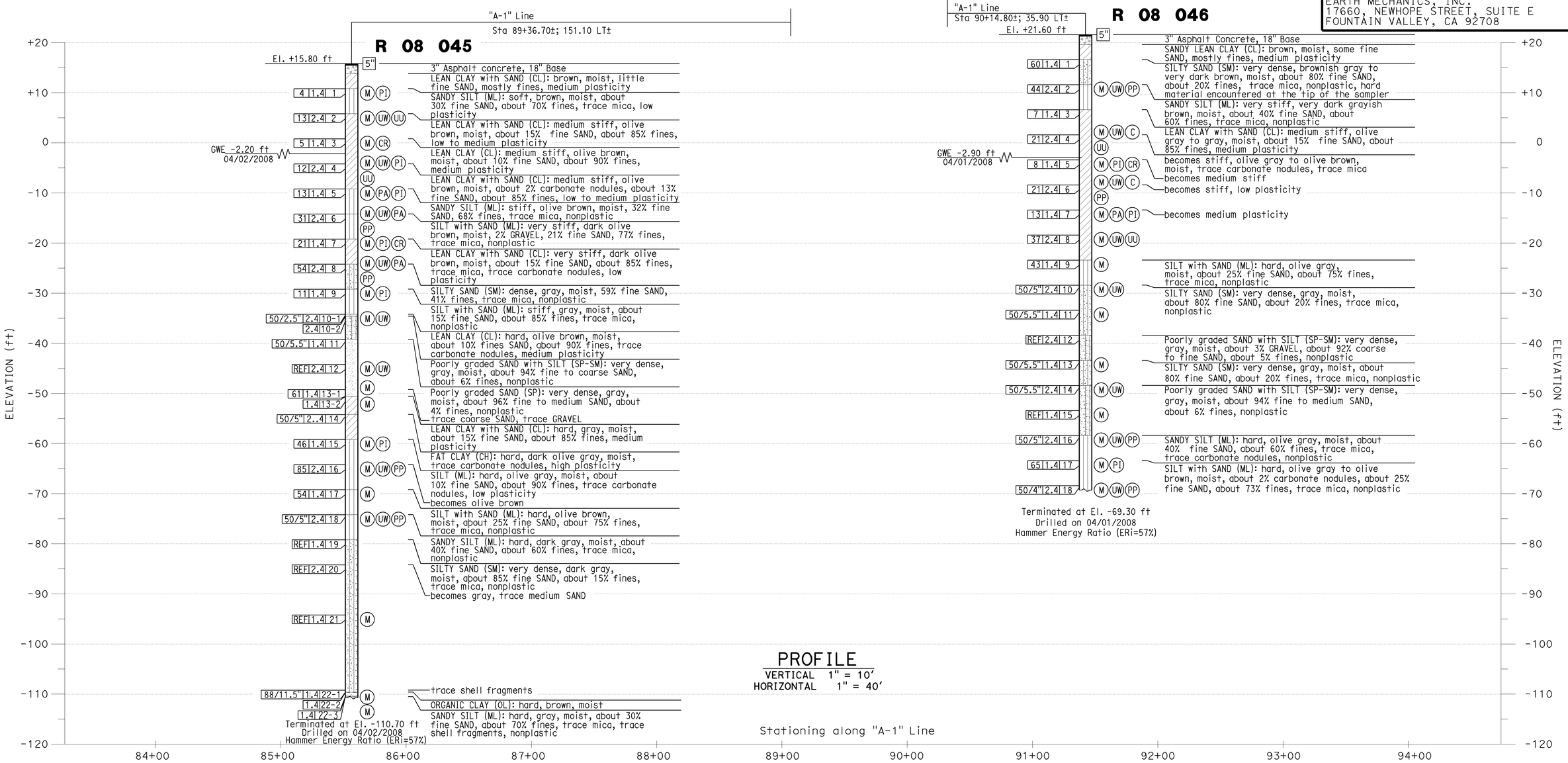

PROFILE

VERTICAL 1" = 10'
HORIZONTAL 1" = 40'

Sudhakar Vatti
DESIGN OVERSIGHT Sudhakar Vatti

8-10-09
SIGN OFF DATE

DRAWN BY: J.Fang

CHECKED BY: K.Pratheepan

FIELD INVESTIGATION BY:

R.Jie

PREPARED FOR THE STATE OF CALIFORNIA DEPARTMENT OF TRANSPORTATION

G.J.Gunaranjan
PROJECT ENGINEER

BRIDGE NO. 55-1098E
POST MILE 24.02

405/605 HOV CONNECTOR

LOG OF TEST BORINGS NO. 16

OSF CIVIL LOG OF TEST BORINGS SHEET (ENGLISH) (REV. 2-25-05)

ORIGINAL SCALE IN INCHES FOR REDUCED PLANS 0 1 2 3

CU 12235
EA 071631

DISREGARD PRINTS BEARING EARLIER REVISION DATES

REVISION DATES (PRELIMINARY STAGE ONLY) 10/25/08 03/25/09 04/06/09 07/21/09

SHEET 85 OF 87

FILE => 55-1098e-z-1tb16.dgn

USERNAME => Trienhard DATE PLOTTED => 03-FEB-2010 TIME PLOTTED => 10:52

(Old-VII-Sm-170-A)

FED. ROAD DIV. NO.	STATE	F. A. PROJECT No.	SHEET No.	TOTAL SHEETS
7	CALIF.			

DIST	COUNTY	ROUTE	SECTION	SHEET No.	TOTAL SHEETS
07	Ora	605		161	161

BRIDGE ENGINEER — CHIEF ENGINEER—GENERAL SERVICES

DATE APPROVED March 22, 1965

TBM Elev. 14.20

Sta 182 + 52.94 POC NBD
Sta 488 + 10.80 ℄ RTE 158

BM # 483-A-62 Elev. 2.89

Fd 2" I.P. and standard brass cap with fence post marker, 450' right of Sta. 483+00 San Diego Fwy., 8' west of 6' block wall and power pole 1285406-E

DIVISION OF ENGINEERING SERVICES - GEOTECHNICAL SERVICES					
As-Built Log of Test Borings sheet is considered an informational document only. As such, the State of California registration seal with signature, license number and registration certificate expiration date confirm that this is a true and accurate copy of the original document. This drawing is available and presented only for the convenience of any bidder, contractor or other interested party.					
DIST.	COUNTY	ROUTE	KILOMETER POST-TOTAL PROJECT	Sheet No.	Total Sheets
12	Ora	22,405, 605	R0.3/R0.9,22.3/24.0,3.0/R1.6	1657	1929
8.880			07/27/09		
REGISTERED CIVIL ENGINEER			DATE		

LOG OF TEST BORINGS NO. 17

NOTE: A COPY OF THIS LOG OF TEST BORINGS IS AVAILABLE AT OFFICE OF STRUCTURE MAINTENANCE AND INVESTIGATIONS, SACRAMENTO, CALIFORNIA	CU: 12235 EA: 071631	BRIDGE No. 55-1098E
	Sheet	of
	86	87

Revisions made to this Log of Test Borings from the original 1966 Log of Test Borings are the addition of the following table and notes:

To accompany plans dated 2-1-10

REGISTERED PROFESSIONAL ENGINEER
G. J. Gunaranjan
No. C71758
Exp. 12-31-09
CIVIL
STATE OF CALIFORNIA

Boring	Station	Offset from "A-1" Line

AS BUILT PLANS
Contract No. 07-033974
Date Completed 9-16-66
Document No. 70000020

PLAN
Scale: 1"=50'

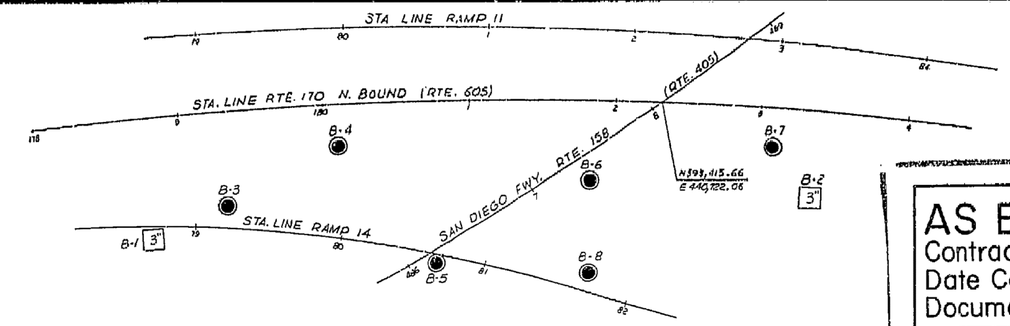

...MATION ON ACTUAL FOUNDATION CONDITIONS ENCOUNTERED IS ON FILE IN BRIDGE GEOLOGY SECTION.

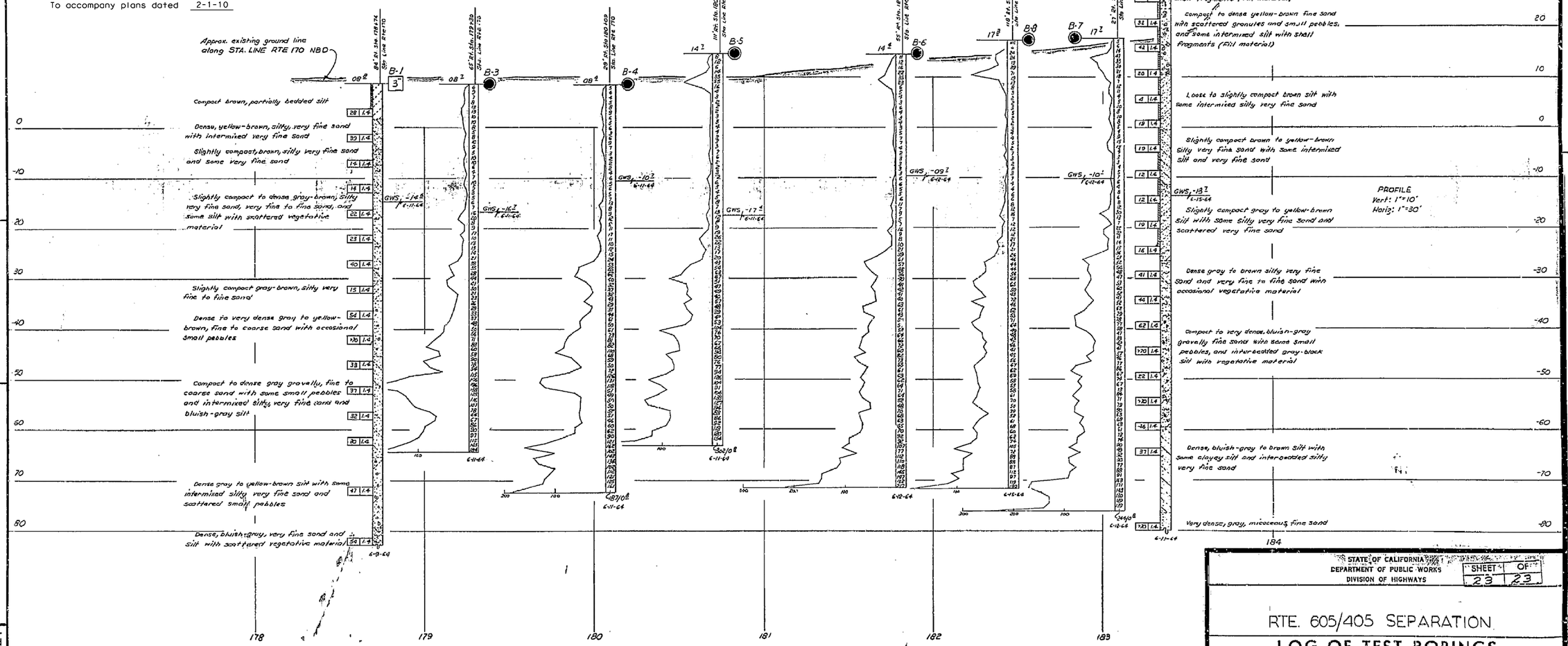

LEGEND OF BORING OPERATIONS

Penetrometer: 2½" Cone Penetrometer; Sampler Boring (Dry); Rotary Boring (Wet); Auger Boring (Dry); Jet Boring; Cone Boring; Test Pit

Penetration Boring; Rotary Boring; 1" Soil Tube

LEGEND OF EARTH MATERIALS

Gravel; Sand; Silt; Clay; Silty Clay or Clayey Silt; Peat and Organic Matter; Fill Material; Igneous Rock; Sedimentary Rock; Metamorphic Rock; Sandy Clay or Clayey Sand; Sandy Silt or Silty Sand

CLASSIFICATION OF MATERIAL BASED ON STANDARD GRAIN SIZE LIMITS

Diagram showing the basis for estimates of grain size classification. Amounts of gravel is present in appreciable amounts the term "gravelly" may be added to the classification, e.g. "clay, gravelly, wet." When used to describe sand, "coarse," "medium" and "fine" silt and gravel, refer to grain size limits.

NOTE: Classification of earth material as shown on this sheet is based upon field inspection and is not to be construed to imply mechanical analysis.

FIELD STUDY	By: D.B. Crawford	5-15-64
DRAWN	By: R.E. Crawford	5-29-64
CHECKED	By: K. Tachino	7-1-64
Approval Recommended by:	C.S. Mesrobian (Engineering Geologist)	

BRIDGE DEPARTMENT
ENGINEERING GEOLOGY SECTION

STATE OF CALIFORNIA
DEPARTMENT OF PUBLIC WORKS
DIVISION OF HIGHWAYS

SHEET 23 OF 23

RTE. 605/405 SEPARATION

LOG OF TEST BORINGS

SCALE As Noted | BRIDGE 55-412 R/AR | FILE | DRAWING 55412-31

161

FILENAME => 55-1098e-z-1tb17.tif

Disregard prints bearing earlier numbers → PREL. DRAWING No. PR-

FED. ROAD DIV. No.	STATE	F. A. PROJECT No.	SHEET No.	TOTAL SHEETS
7	CALIF.			

DIST.	COUNTY	ROUTE	SECTION	SHEET No.	TOTAL SHEETS
VII	ORA	170	A	208	250

Date approved April 20, 1964

Z

BM # 483-A-62 Elev. 9.83
Found 2 inch iron pipe and Standard Brass cap with fence post marker, 450 ft right of 483+05 San Diego Fwy., 8 ft. West of 6 ft. block wall and power pole 1285406-E

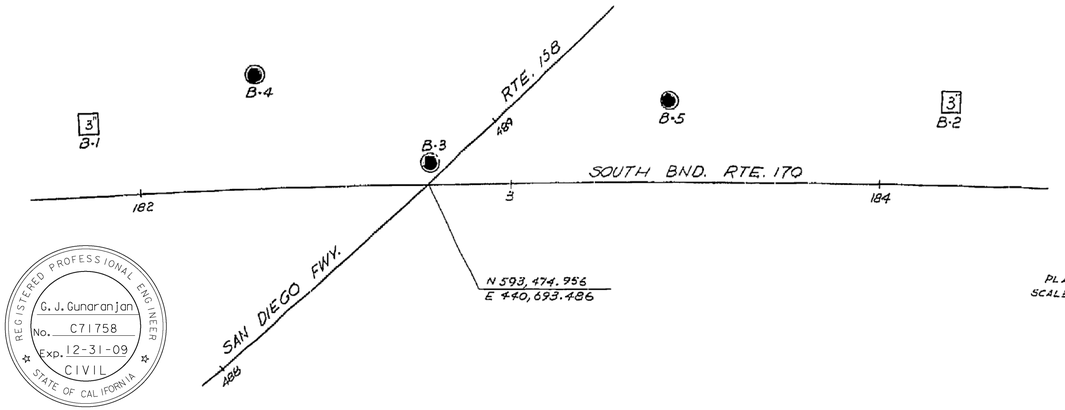

PLAN
SCALE: 1" = 20'

DIVISION OF ENGINEERING SERVICES - GEOTECHNICAL SERVICES					
As-Built Log of Test Borings sheet is considered an informational document only. As such, the State of California registration seal with signature, license number and registration certificate expiration date confirm that this is a true and accurate copy of the original document. This drawing is available and presented only for the convenience of any bidder, contractor or other interested party.					
DIST.	COUNTY	ROUTE	KILOMETER POST-TOTAL PROJECT	Sheet No.	Total Sheets
12	Ora	22,405, 605	R0.3/R0.9,22.3/24.0,3.0/R1.6	1658	1929
8880 REGISTERED CIVIL ENGINEER			07/27/09 DATE		

REGISTERED PROFESSIONAL ENGINEER
G. J. Gunaranjan
No. C71758
Exp. 12-31-09
CIVIL
STATE OF CALIFORNIA

LOG OF TEST BORINGS NO. 18

NOTE: A COPY OF THIS LOG OF TEST BORINGS IS AVAILABLE AT OFFICE OF STRUCTURE MAINTENANCE AND INVESTIGATIONS, SACRAMENTO, CALIFORNIA	CU: 12235 EA: 071631	BRIDGE No. 55-1098E	
		Sheet 87	of 87

Revisions made to this Log of Test Borings from the original 1966 Log of Test Borings are the addition of the following table and notes:

To accompany plans dated 2-1-10

Boring	Station	Offset from "A-1" Line

AS BUILT PLANS
Contract No. 07-033914
Date Completed
Document No. 70001891

INFORMATION ON ACTUAL FOUNDATION CONDITIONS ENCOUNTERED IS ON FILE IN BRIDGE GEOLOGY SECTION

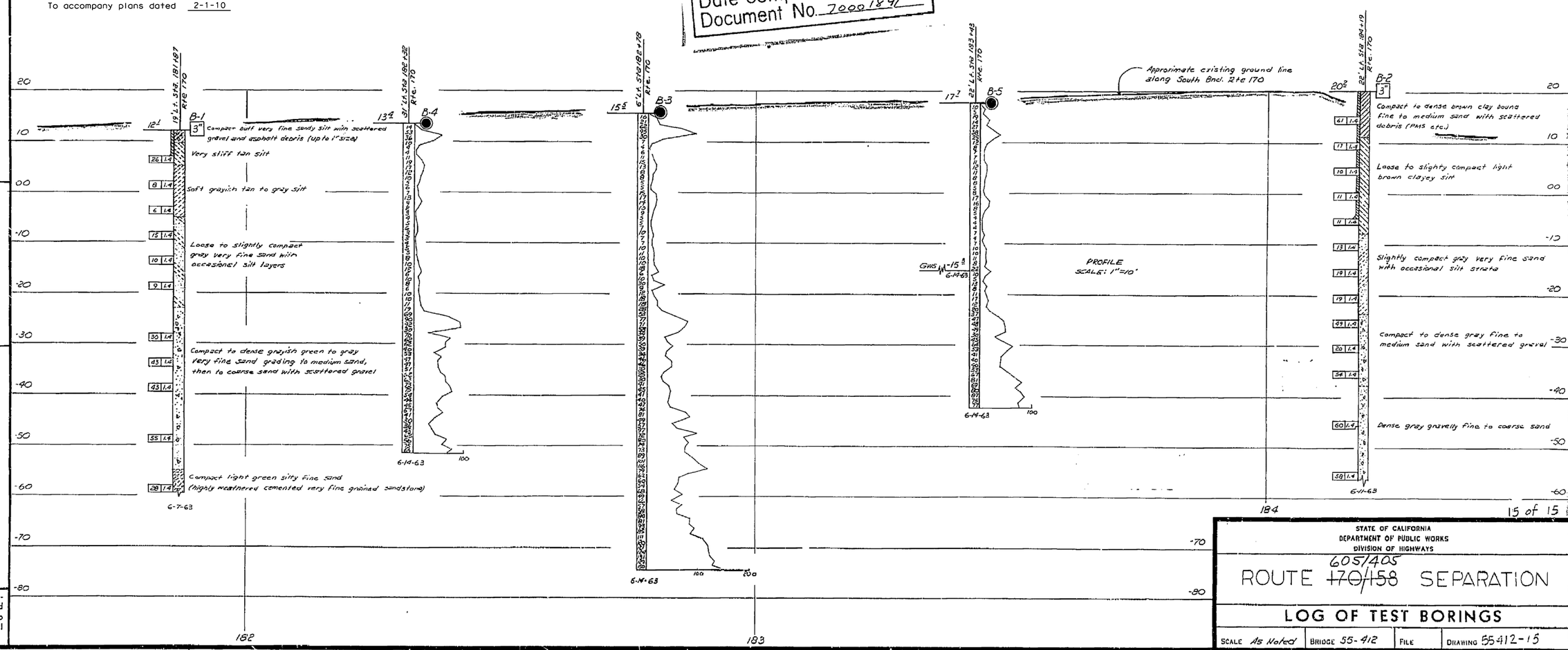

NOTE: Classification of earth material as shown on this sheet is based upon field inspection and is not to be construed to imply mechanical analysis.

FIELD STUDY	By	E.D. McCurdy 6-14-63
DRAWN	By	K.L. Ruth 6-20-63
CHECKED	By	K. Tachino 6-25-63

Approval Recommended by: L. L. Villarosa, Engineering Geologist

BRIDGE DEPARTMENT
ENGINEERING GEOLOGY SECTION

STATE OF CALIFORNIA
DEPARTMENT OF PUBLIC WORKS
DIVISION OF HIGHWAYS

ROUTE ~~170/158~~ 605/405 SEPARATION

LOG OF TEST BORINGS

SCALE As Noted	BRIDGE 55-412	FILE	DRAWING 55412-15

15 of 15

208

FILENAME => 55-1098e-z-1tb18.tif

Disregard prints bearing earlier numbers → PREL. DRAWING No. PR-

DIST	COUNTY	ROUTE	POST MILES TOTAL PROJECT	SHEET No	TOTAL SHEETS
12	Ora	22,405, 605	R0.3/R0.9, 22.3/24.0,3.0/R1.6	1659	1929

REGISTERED CIVIL ENGINEER 07-27-09 DATE

2-1-10
PLANS APPROVAL DATE

REGISTERED PROFESSIONAL ENGINEER A. Priley No. C 73375 Exp. 12-31-10 CIVIL STATE OF CALIFORNIA

The State of California or its officers or agents shall not be responsible for the accuracy or completeness of electronic copies of this plan sheet.

OCTA
550 SOUTH MAIN STREET
ORANGE, CA 92863

TRC
21 TECHNOLOGY DR
IRVINE, CA 92618

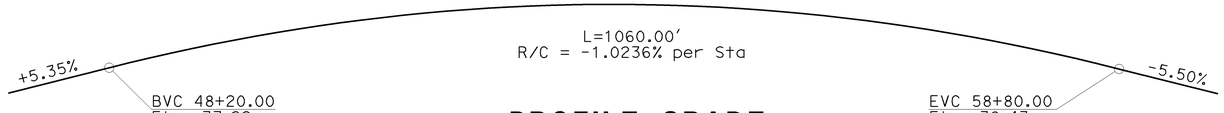

PROFILE GRADE

No Scale

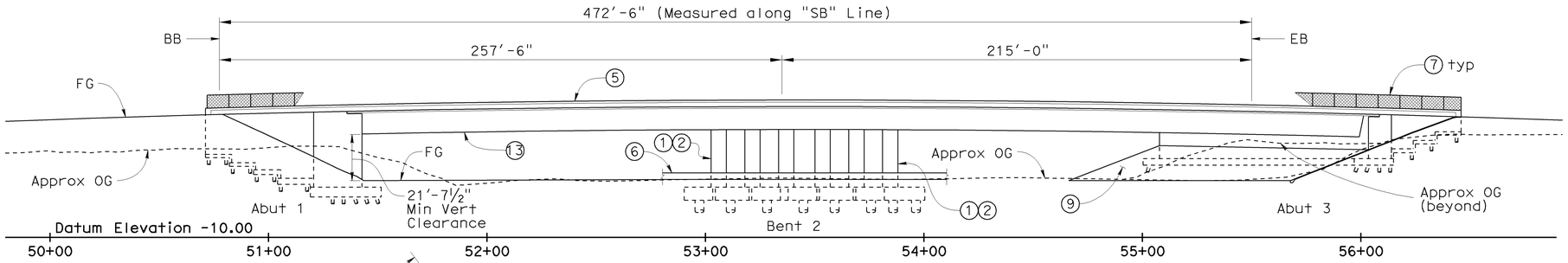

ELEVATION

1"= 30'

Note: Existing Structure not shown
All piles not shown

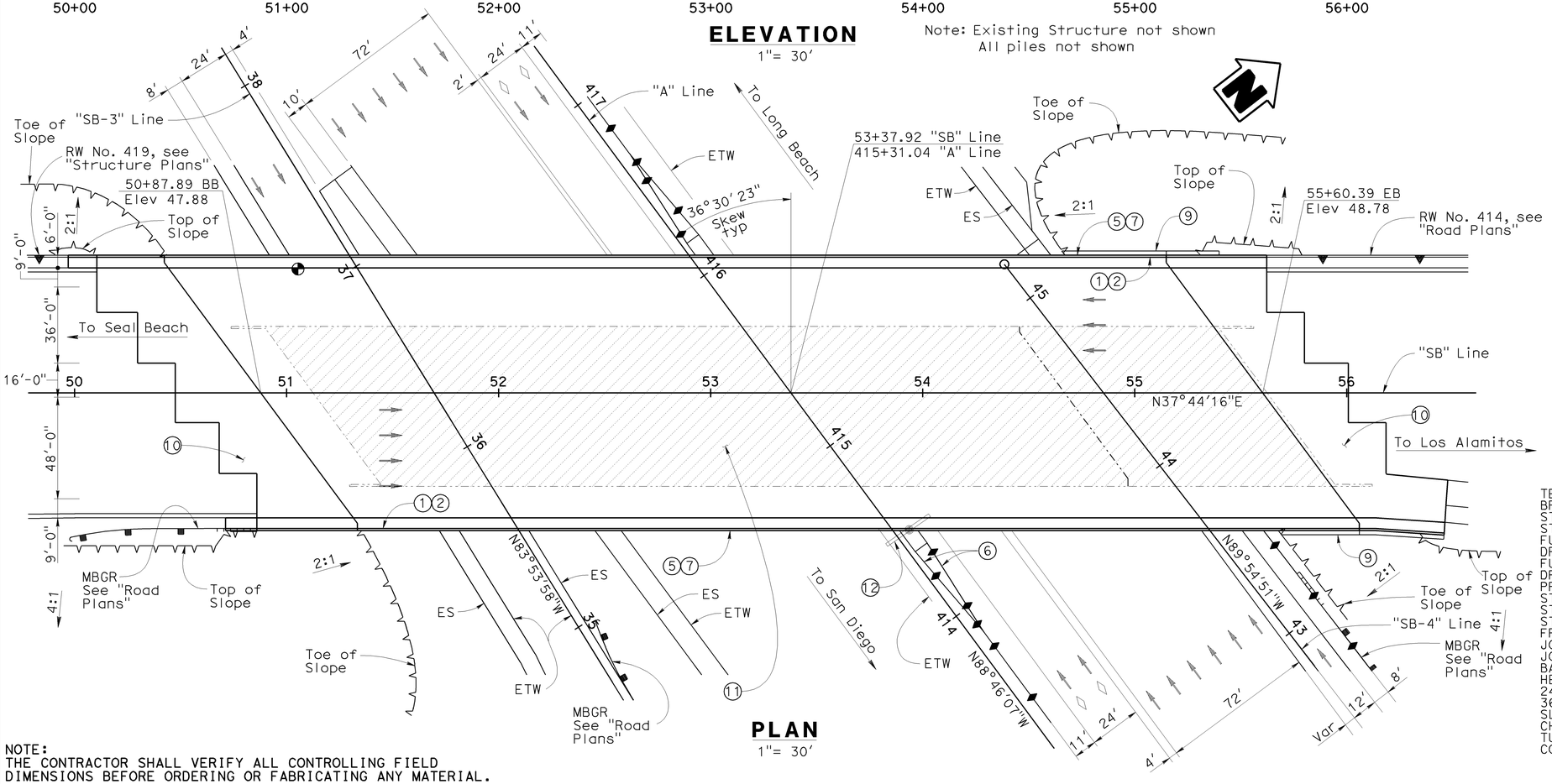

PLAN

1"= 30'

LEGEND

① Paint "Bridge No. 55-1099" and year constructed
② Paint "Seal Beach Blvd OC"
⑤ Concrete Barrier (Type 26 Mod)
⑥ Concrete Barrier (Type 60R), see "Road Plans"
⑦ Chain Link Railing (Type 7)
⑨ Slope Paving (Concrete)
⑩ Structure Approach, Type N(30S)
⑪ Remove Exist Bridge (Br No. 55-0365) in Stages
⑫ Exist Sign Structure to be removed, see "Road Plans"
⑬ Bridge Lighting, see "Road Plans"

Point of Minimum Vertical Clearance
Bridge Removal, Location A
New Structure
Existing Structure

NOTES

1. For Typical Sections and Staged Construction, see "General Plan No. 2" sheet

SEAL BEACH BLVD OC (REPLACE) BR NO 55-1099
QUANTITIES

TEMPORARY SUPPORT	LUMP	SUM
BRIDGE REMOVAL, LOCATION A	LUMP	SUM
STRUCTURE EXCAVATION (BRIDGE)	7,200	CY
STRUCTURE BACKFILL (BRIDGE)	4,220	CY
FURNISH 48" STEEL PIPE PILING	2,739	LF
DRIVE 48" STEEL PIPE PILE	24	EA
FURNISH PILING (CLASS 200) (ALTERNATIVE X)	18,481	LF
DRIVE PILE (CLASS 200)(ALTERNATIVE X)	310	EA
PRESTRESSING CAST-IN-PLACE CONCRETE	LUMP	SUM
STRUCTURAL CONCRETE, BRIDGE FOOTING	1,655	CY
STRUCTURAL CONCRETE, BRIDGE	7,650	CY
STRUCTURAL CONCRETE, APPROACH SLAB (TYPE N)	405	CY
FRACTURED RIB TEXTURE	3,755	SQFT
JOINT SEAL ASSEMBLY (MR 3")	147	LF
JOINT SEAL ASSEMBLY (MR 3½")	147	LF
BAR REINFORCING STEEL (BRIDGE)	2,000,000	LB
HEADED BAR REINFORCEMENT	277	EA
24" WELDED STEEL PIPE CASING (BRIDGE)	302	LF
36" WELDED STEEL PIPE CASING (BRIDGE)	112	LF
SLOPE PAVING (CONCRETE)	79	CY
CHAIN LINK RAILING (TYPE 7)	1,140	LF
TUBULAR HANDRAILING	14	LF
CONCRETE BARRIER (TYPE 26 MODIFIED)	1,140	LF

NOTE:
THE CONTRACTOR SHALL VERIFY ALL CONTROLLING FIELD DIMENSIONS BEFORE ORDERING OR FABRICATING ANY MATERIAL.

Sudhakar Vatti
DESIGN OVERSIGHT Sudhakar Vatti
8-10-09
SIGN OFF DATE

	BY	CHECKED
DESIGN	A. Priley	J. Hermstad
DETAILS	K. Michalski	J. Hermstad
QUANTITIES	A. Priley	J. Wong

LOAD AND RESISTANCE FACTOR DESIGN (LRFD) — LIVE LOADING: HL-93 W/"LOW-BOY" AND PERMIT DESIGN VEHICLE
LAYOUT — BY K. Michalski — CHECKED J. Hermstad
SPECIFICATIONS — BY EL Tyk — PLANS AND SPECS COMPARED J. Hermstad

PREPARED FOR THE STATE OF CALIFORNIA DEPARTMENT OF TRANSPORTATION

A. Priley
PROJECT ENGINEER

BRIDGE NO. 55-1099
POST MILES 22.64

SEAL BEACH BLVD OC (REPLACE)
GENERAL PLAN NO. 1

DESIGN GENERAL PLAN SHEET (ENGLISH) (REV.2/25/05)

ORIGINAL SCALE IN INCHES FOR REDUCED PLANS 0 1 2 3

CU 12235
EA 071631

DISREGARD PRINTS BEARING EARLIER REVISION DATES
REVISION DATES (PRELIMINARY STAGE ONLY) 02/18/08 01/28/08 09/17/08 04/06/09 07/27/09

SHEET 1 OF 45

FILE => 55-1099-a-gp01.dgn

USERNAME => rtlenord DATE PLOTTED => 03-FEB-2010 TIME PLOTTED => 15:22

DIST	COUNTY	ROUTE	POST MILES TOTAL PROJECT	SHEET No	TOTAL SHEETS
12	Ora	22,405, 605	R0.3/R0.9, 22.3/24.0,3.0/R1.6	1660	1929

REGISTERED CIVIL ENGINEER 07-27-09 DATE

2-1-10
PLANS APPROVAL DATE

REGISTERED PROFESSIONAL ENGINEER A. Priley No. C 73375 Exp. 12-31-10 CIVIL STATE OF CALIFORNIA

The State of California or its officers or agents shall not be responsible for the accuracy or completeness of electronic copies of this plan sheet.

OCTA
550 SOUTH MAIN STREET
ORANGE, CA 92863

TRC
21 TECHNOLOGY DR
IRVINE, CA 92618

UTILITIES

- A Lighting Conduit
- B Fiber Optic (City of Seal Beach) (3" plastic pipe)
- C Cable Television (Time Warner) (4" plastic pipe)
- D Future Utility Opening (4" plastic pipe)
- E Communications (Qwest) (2" plastic pipe)
- F1 and F2 Future Utility

LEGEND

- 3 Closure Pour, (5'-0")
- 4 Temporary Railing (Type K), see "Road Plans"
- 5 Concrete Barrier (Type 26 Mod)
- 6 Concrete Barrier (Type 60R), see "Road Plans"
- 7 Chain Link Railing (Type 7)
- 14 Temporary Support of Exist Structure

Bridge Removal, Location A (See Note 3)
New Structure
Existing Structure

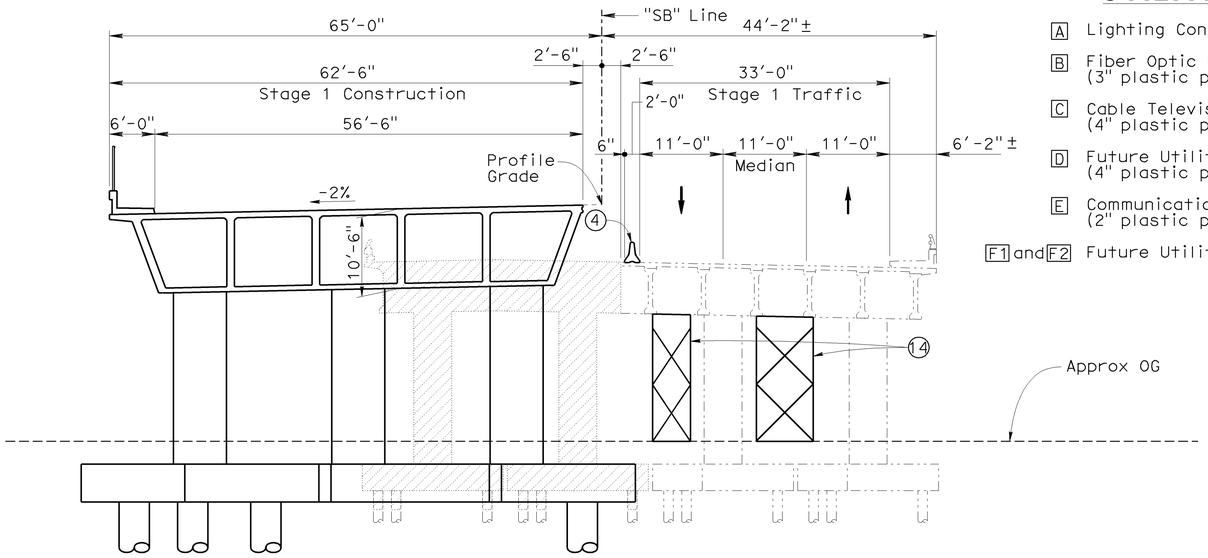

TYPICAL SECTION - STAGE 1

1"= 10'

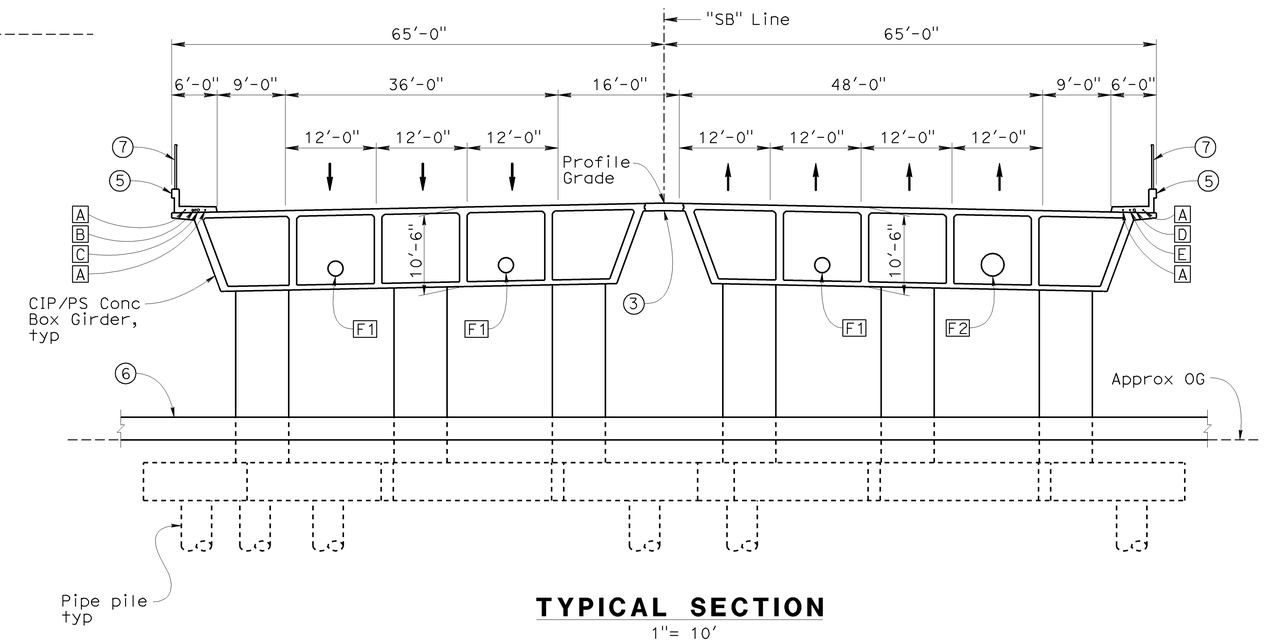

TYPICAL SECTION

1"= 10'

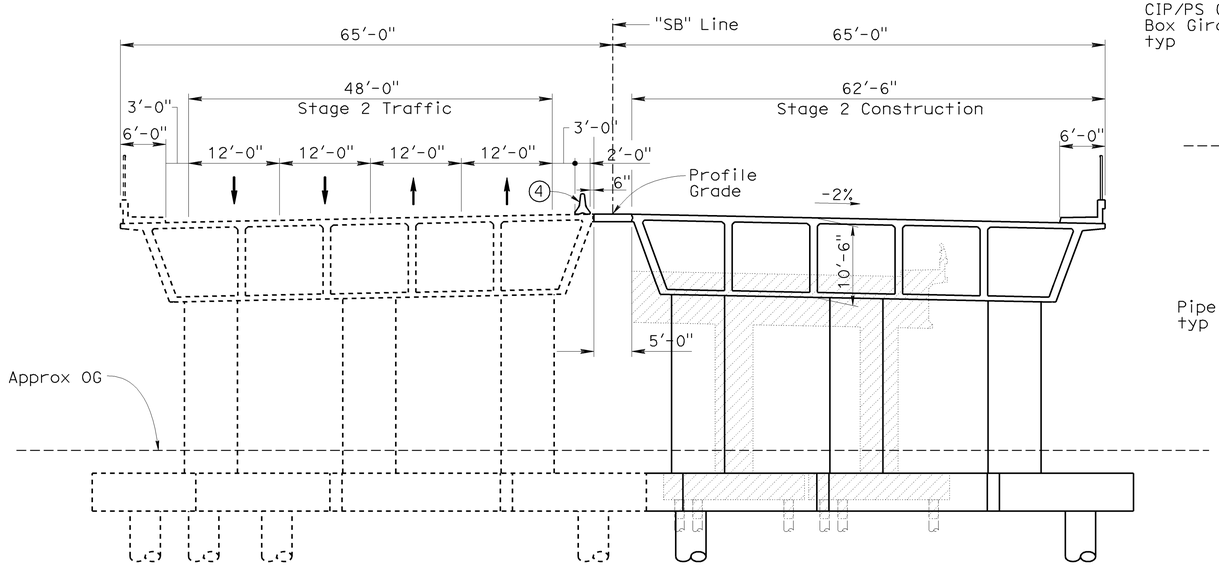

TYPICAL SECTION - STAGE 2

1"= 10'

NOTES

1. For Plan and Elevation, see "General Plan No. 1" sheet
2. All piles not shown
3. For removal limits and temporary support loads, see "Bridge Removal Details" sheet

NOTE:
THE CONTRACTOR SHALL VERIFY ALL CONTROLLING FIELD DIMENSIONS BEFORE ORDERING OR FABRICATING ANY MATERIAL.

Sudhakar Vatti
DESIGN OVERSIGHT Sudhakar Vatti
8-10-09
SIGN OFF DATE

	BY	CHECKED
DESIGN	A. Priley	J. Hermstad
DETAILS	K. Michalski	J. Hermstad
QUANTITIES	A. Priley	J. Wong

LOAD AND RESISTANCE FACTOR DESIGN (LRFD) — LIVE LOADING: HL-93 W/"LOW-BOY" AND PERMIT DESIGN VEHICLE

	BY	CHECKED
LAYOUT	K. Michalski	J. Hermstad
SPECIFICATIONS	EL Tyk	PLANS AND SPECS COMPARED J. Hermstad

PREPARED FOR THE STATE OF CALIFORNIA DEPARTMENT OF TRANSPORTATION

A. Priley
PROJECT ENGINEER

CU 12235
EA 071631

BRIDGE NO. 55-1099
POST MILES 22.64

SEAL BEACH BLVD OC (REPLACE)
GENERAL PLAN NO. 2

DESIGN GENERAL PLAN SHEET (ENGLISH) (REV.2/25/05)

ORIGINAL SCALE IN INCHES FOR REDUCED PLANS 0 1 2 3

DISREGARD PRINTS BEARING EARLIER REVISION DATES

REVISION DATES (PRELIMINARY STAGE ONLY): 02/18/08 07/25/08 09/17/08 04/06/09 07/21/09

SHEET 2 OF 45

FILE => 55-1099-a-gp02.dgn

USERNAME => trlemard DATE PLOTTED => 03-FEB-2010 TIME PLOTTED => 15:22

DIST	COUNTY	ROUTE	POST MILES TOTAL PROJECT	SHEET No	TOTAL SHEETS
12	Ora	22,405, 605	R0.3/R0.9, 22.3/24.0,3.0/R1.6	1661	1929

REGISTERED CIVIL ENGINEER 07-27-09 DATE

2-1-10
PLANS APPROVAL DATE

REGISTERED PROFESSIONAL ENGINEER A. Priley No. C 73375 Exp. 12-31-10 CIVIL STATE OF CALIFORNIA

The State of California or its officers or agents shall not be responsible for the accuracy or completeness of electronic copies of this plan sheet.

OCTA
550 SOUTH MAIN STREET
ORANGE, CA 92863

TRC
21 TECHNOLOGY DR
IRVINE, CA 92618

STANDARD PLANS DATED MAY 2006

A10A	Acronyms and Abbreviations (Sheet 1 of 2)
A10B	Acronyms and Abbreviations (Sheet 2 of 2)
A10C	Symbols (Sheet 1 of 2)
A10D	Symbols (Sheet 2 of 2)
A62B	Limits of Payment for Excavation and Backfill - Bridge Surcharge and Wall
A62C	Limits of Payment for Excavation and Backfill - Bridge
A74	Survey Monuments
B0-1	Bridge Details
B0-3	Bridge Details
B0-5	Bridge Details
B0-13	Bridge Details
RSP B2-8	Pile Details Class 200
B3-1	Retaining Wall Type 1 H= 4' Through 30'
B3-8	Retaining Wall Details No. 1
B7-1	Box Girder Details
B7-10	Utility Opening - Box Girder
B7-11	Utility Details
B8-5	Cast-in-Place Prestressed Girder Details
B11-51	Tubular Hand Railing
B11-52	Chain Link Railing Type 7
B11-54	Concrete Barrier Type 26

PLAN SYMBOLS

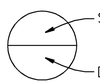

Section Identification

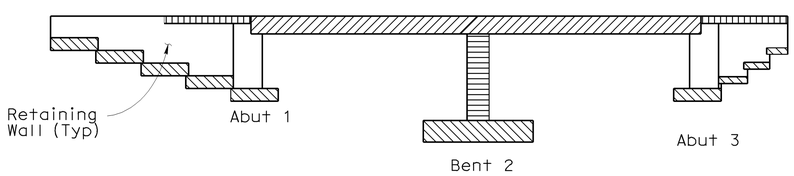

Structural Concrete, Bridge (f'c = 4.0 ksi @ 28 days)
Structural Concrete, Bridge (f'c = 5.5 ksi @ 28 days)
Structural Concrete, Bridge
Structural Concrete, Bridge Footing
Structural Concrete, Approach Slab

CONCRETE STRENGTH AND TYPE LIMITS

No Scale

INDEX TO BRIDGE PLANS

SHEET NO.	TITLE
1	General Plan No. 1
2	General Plan No. 2
3	Index to Plans
4	Deck Contours
5	Foundation Plan
6	Bridge Removal Details
7	Abutment 1 Layout
8	Abutment 3 Layout
9	Abutment Pile Layout
10	Abutment Details No. 1
11	Abutment Details No. 2
12	Abutment Details No. 3
13	Abutment Details No. 4
14	Abutment Details No. 5
15	Abutment Details No. 6
16	Abutment Details No. 7
17	Abutment Details No. 8
18	Bent 2 Layout - Stage 1
19	Bent 2 Layout - Stage 2
20	Bent Details No. 1
21	Bent Details No. 2
22	Bent Details No. 3
23	Bent Details No. 4
24	Bent Details No. 5
25	Typical Section - Stage 1
26	Typical Section - Stage 2
27	Girder Layout - Stage 1
28	Girder Layout - Stage 2
29	Girder Reinforcement No. 1
30	Girder Reinforcement No. 2
31	Joint Seal Assembly
32	Miscellaneous Details
33	Architectural Details No. 1
34	Architectural Details No. 2
35	Architectural Details No. 3
36	Structure Approach Type N(30S)
37	Structure Approach Drainage Details
38	Slope Paving
39	Log of Test Borings No. 1
40	Log of Test Borings No. 2
41	Log of Test Borings No. 3
42	Log of Test Borings No. 4
43	Log of Test Borings No. 5
44	Log of Test Borings No. 6 (As-Built)
45	Log of Test Borings No. 7 (As-Built)

GENERAL NOTES
LOAD AND RESISTANCE FACTOR DESIGN

DESIGN: AASHTO LRFD Bridge Design Specifications, 3rd edition with Interims through 2006 and the Caltrans Amendments v3.06.01"; except that earth retaining systems, bridge barrier and structure approach slabs are designed using Bridge Design Specifications ('96 AASHTO w/ Revisions by Caltrans).

SEISMIC DESIGN: CALTRANS SEISMIC DESIGN CRITERIA (SDC), Version 1.4 dated June 2006.

DEAD LOAD: Includes 35 psf for future wearing surface

LIVE LOADING: HL93 and permit design load.

SEISMIC LOADING: Site Specific ARS as Shown

Modified SDC ARS Curve for Soil Profile D
(M=7.25 ±0.25)
(Peak Rock Acceleration = 0.6g)

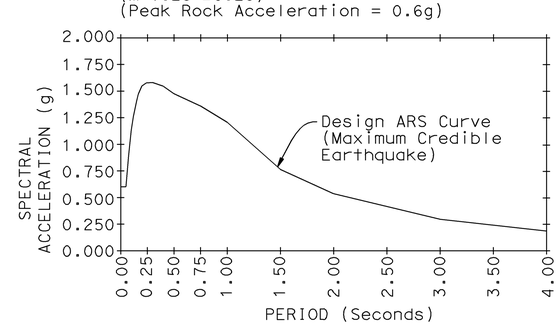

CONCRETE: f_y = 60 ksi
f'_c = 3.6 ksi
n = 8
See prestressing notes.

STRUCTURAL STEEL: Steel Pipe Piles: ASTM A252 Grade 3

Sudhakar Vatti
DESIGN OVERSIGHT Sudhakar Vatti
8-10-09
SIGN OFF DATE

DESIGN DETAIL SHEET (ENGLISH) (REV. 2/25/05)

	BY	CHECKED
DESIGN	A. Priley	J. Hermstad
DETAILS	K. Michalski	J. Hermstad
QUANTITIES	A. Priley	J. Wong

ORIGINAL SCALE IN INCHES FOR REDUCED PLANS 0 1 2 3

PREPARED FOR THE STATE OF CALIFORNIA DEPARTMENT OF TRANSPORTATION

A. Priley
PROJECT ENGINEER

CU 12235
EA 071631

BRIDGE NO. 55-1099
POST MILE 22.64

SEAL BEACH BLVD OC (REPLACE)
INDEX TO PLANS

DISREGARD PRINTS BEARING EARLIER REVISION DATES

REVISION DATES (PRELIMINARY STAGE ONLY) 09/17/08 04/06/09 07/27/09

SHEET 3 OF 45

FILE => 55-1099-a-itp.dgn

USERNAME => rfriehard DATE PLOTTED => 04-FEB-2010 TIME PLOTTED => 06:16

DIST	COUNTY	ROUTE	POST MILES TOTAL PROJECT	SHEET No	TOTAL SHEETS
12	Ora	22,405, 605	R0.3/R0.9, 22.3/24.0,3.0/R1.6	1662	1929

REGISTERED CIVIL ENGINEER 07-27-09 DATE

2-1-10
PLANS APPROVAL DATE

REGISTERED PROFESSIONAL ENGINEER
A. Priley
No. C 73375
Exp. 12-31-10
CIVIL
STATE OF CALIFORNIA

The State of California or its officers or agents shall not be responsible for the accuracy or completeness of electronic copies of this plan sheet.

OCTA
550 SOUTH MAIN STREET
ORANGE, CA 92863

TRC
21 TECHNOLOGY DR
IRVINE, CA 92618

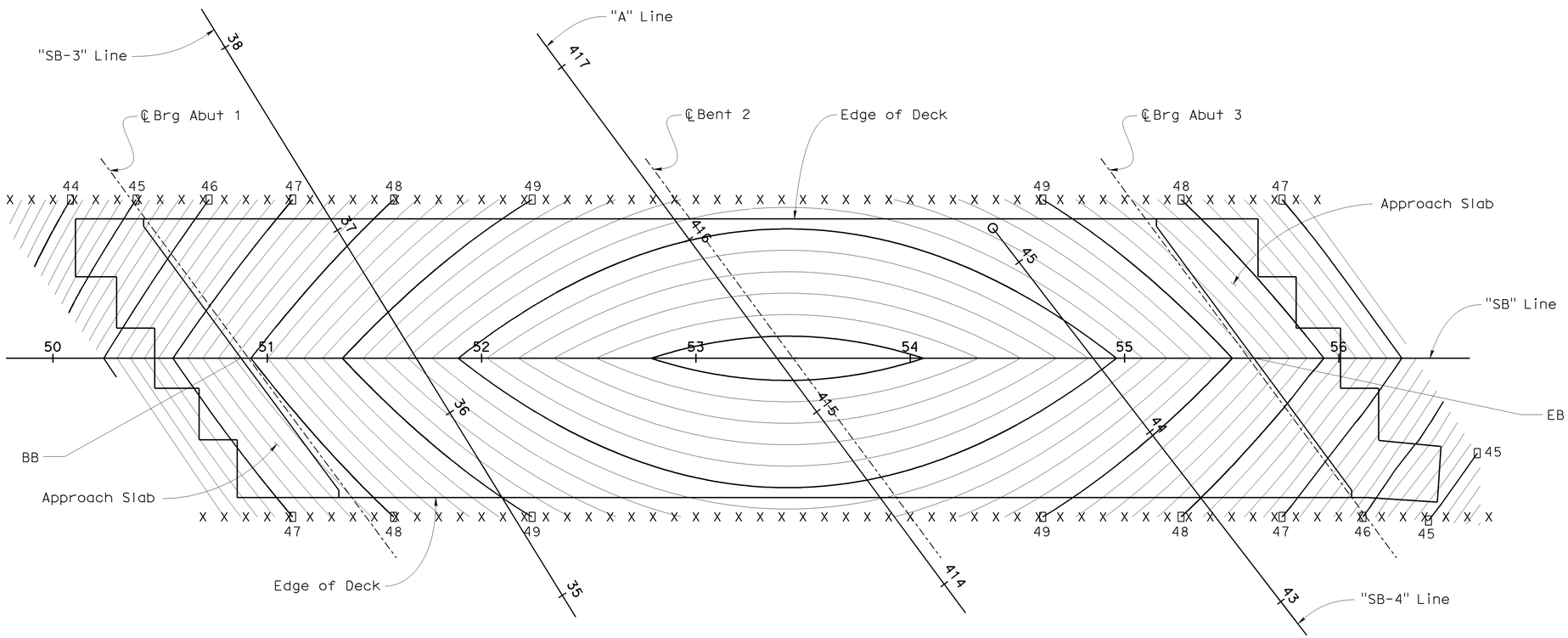

PLAN

1"= 30'

LEGEND

X - Denotes 10' intervals along "SB" Line

□ - Indicates even foot contours. Contour interval is 0.2'
Contours do not include camber.

Sudhakar Vatti
DESIGN OVERSIGHT Sudhakar Vatti
8-10-09
SIGN OFF DATE

	BY	CHECKED
DESIGN	A. Priley	J. Hermstad
DETAILS	K. Michalski	J. Hermstad
QUANTITIES	A. Priley	J. Wong

PREPARED FOR THE
STATE OF CALIFORNIA
DEPARTMENT OF TRANSPORTATION

A. Priley
PROJECT ENGINEER

BRIDGE NO. 55-1099
POST MILE 22.64

SEAL BEACH BLVD OC (REPLACE)
DECK CONTOURS

DESIGN DETAIL SHEET (ENGLISH) (REV. 2/25/05)

ORIGINAL SCALE IN INCHES FOR REDUCED PLANS 0 1 2 3

CU 12235
EA 071631

DISREGARD PRINTS BEARING EARLIER REVISION DATES

REVISION DATES (PRELIMINARY STAGE ONLY) 09/17/08 04/06/09 07/21/09

SHEET 4 OF 45

FILE => 55-1099-d-dc01.dgn

USERNAME => rtrenord DATE PLOTTED => 04-FEB-2010 TIME PLOTTED => 06:16

DIST	COUNTY	ROUTE	POST MILES TOTAL PROJECT	SHEET No	TOTAL SHEETS
12	Ora	22,405, 605	R0.3/R0.9, 22.3/24.0,3.0/R1.6	1663	1929

REGISTERED CIVIL ENGINEER 07-27-09 DATE

2-1-10
PLANS APPROVAL DATE

REGISTERED PROFESSIONAL ENGINEER A. Priley No. C 73375 Exp. 12-31-10 CIVIL STATE OF CALIFORNIA

The State of California or its officers or agents shall not be responsible for the accuracy or completeness of electronic copies of this plan sheet.

OCTA
550 SOUTH MAIN STREET
ORANGE, CA 92863

TRC
21 TECHNOLOGY DR
IRVINE, CA 92618

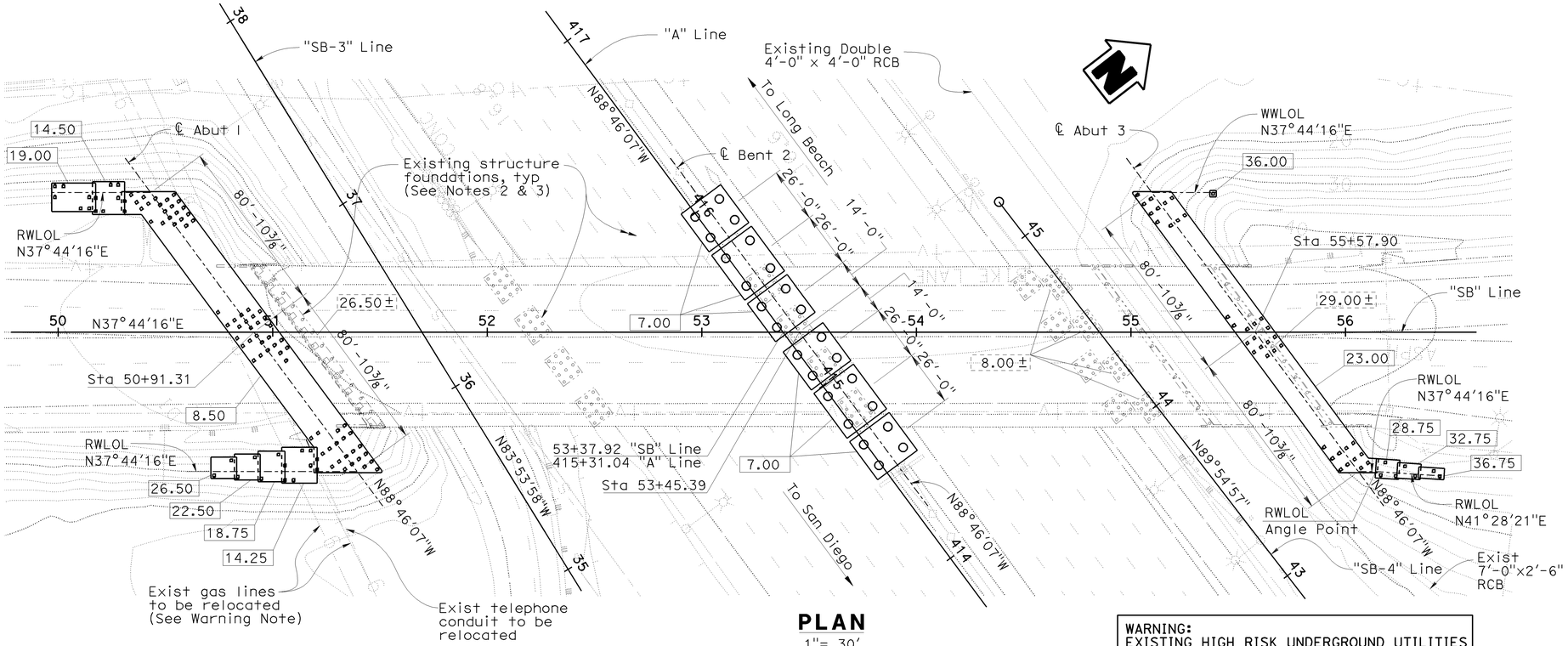

PLAN
1"= 30'

WARNING:
EXISTING HIGH RISK UNDERGROUND UTILITIES

LEGEND

- XX.XX± Indicates bottom of existing footing elevation
- XX.XX Indicates bottom of footing elevation
- Indicates Class 200, Alt "X" Pile
- Indicates Class 200, Alt "X" Pile (battered 3:1)
- Indicates 48" Dia Steel Pipe Pile
- New Structure
- Existing Structure

NOTES

1. All piles not shown
2. Locations of existing structure foundations are approximate
3. Bottom of footing elevation at existing footings is 11.50+/- unless noted otherwise

PILE DATA TABLE

Location	Pile Type	Nominal Resistance		Design Tip Elevation (ft)	Specified Tip Elevation (ft)	Nominal Driving Resistance (kips)
		Compression (kips)	Tension (kips)			
Abut 1 Westerly Retaining Wall	Class 200, Alt "X"	280	0	-40(a), -35(c) & -16(d)	-40	280
Abut 1 Easterly Retaining Wall	Class 200, Alt "X"	280	0	-40(a), -35(c) & -16(d)	-40	280
Abut 1	Class 200, Alt "X"	360	0	-40(a), -35(c) & -22(d)	-40	360
Bent 2	Steel PP 48" x 1.00"	2,120	0	-105(a), -35(c) & -44(d)	-105	2,120
Bent 2 (Test Pile)	Steel PP 48" x 1.00"	2,120	0	-105(a), -35(c) & -44(d)	-105	2,120
Bent 2 (Anchor Pile)	Steel PP 48" x 1.00"	2,120	1,060	-105(a), -116 (b), -35(c) & -44(d)	-116	2,540
Abut 3	Class 200, Alt "X"	360	0	-47(a), -43(c) & -8(d)	-47	360
Abut 3 Westerly Wingwall	Class 200, Alt "X"	280	0	-47(a), -43(c) & +6(d)	-47	280
Abut 3 Easterly Retaining Wall	Class 200, Alt "X"	280	0	-47(a), -43(c) & +8(d)	-47	280

Notes: 1) Design tip elevations are controlled by the following detmads : (a) Compression, (b) Tension, (c) Settlement, (d) Lateral Load
2) The specified tip elevation shall not be raised above the design tip elevations for tension, lateral load, and settlement

BENCHMARK

Monument: 1A-144-04

Described by OCS 2005 - Found 3¾" OCS aluminum benchmark disk stamped "1A-144-04", set in the southwesterly corner of a 4.4 ft by 4.4 ft concrete catch basin. Monument is located in the northeasterly corner of the intersection of Seal Beach Boulevard and St. Cloud Drive, 44 ft easterly of the centerline of Seal Beach Boulevard and 58 ft northerly of the centerline of St. Cloud Dr. Monument is set level with the sidewalk.

Elevation: 15.370 feet

Monument 1A-123-70

Described by OCS 2002 - Found 3¾" OCS aluminum benchmark disk stamped "1A-123-70", set in a concrete channel wall. Monument is located 0.6 miles northerly along Seal Beach Boulevard from its intersection with Westminister Avenue, 65 ft easterly from the centerline of Seal Beach Boulevard and 1 ft northeasterly of the south end of a concrete headwall. Monument is down 1.5 ft from the top of the headwall.

Elevation: 11.631 feet

BASIS OF COORDINATES

Bearings and coordinates as shown hereon are in terms of the California Coordinate System of 1983 (Epoch 1991.35), Zone 6; based locally upon the following County of Orange Control Stations as published by the County of Orange

Name	Northing (ft)	Easting (ft)
3756	2,230,831.57	6,007,513.47
3898R1	2,236,670.48	6,003,468.80

NOTE:
THE CONTRACTOR SHALL VERIFY ALL CONTROLLING FIELD DIMENSIONS BEFORE ORDERING OR FABRICATING ANY MATERIAL.

GEOTECHNICAL PROFESSIONAL APPROVAL DATE 07-27-09

Sudhakar Vatti
DESIGN OVERSIGHT Sudhakar Vatti
8-10-09
SIGN OFF DATE

SCALE: VERT.DATUM NAVD88 HORZ.DATUM CCS83
PHOTOGRAMMETRY AS OF: 12/07 ALIGNMENT TIES
SURVEYED BY Caltrans DRAFTED BY AE, Inc
FIELD CHECKED BY AE, Inc CHECKED BY AE, Inc

DESIGN BY A. Priley CHECKED J. Hermstad
DETAILS BY K. Michalski CHECKED J. Hermstad
QUANTITIES BY A. Priley CHECKED J. Wong

PREPARED FOR THE STATE OF CALIFORNIA DEPARTMENT OF TRANSPORTATION

A. Priley
PROJECT ENGINEER

BRIDGE NO. 55-1099
POST MILE 22.64

SEAL BEACH BLVD OC (REPLACE)
FOUNDATION PLAN

FOUNDATION PLAN SHEET (ENGLISH) (REV. 2-25-05)

ORIGINAL SCALE IN INCHES FOR REDUCED PLANS 0 1 2 3

CU 12235
EA 071631

DISREGARD PRINTS BEARING EARLIER REVISION DATES
REVISION DATES (PRELIMINARY STAGE ONLY) 02/18/08 07/25/08 09/17/08 04/06/09 07/27/09

SHEET 5 OF 45

FILE => 55-1099-e-fdp101.dgn

USERNAME => friehard DATE PLOTTED => 04-FEB-2010 TIME PLOTTED => 06:16

DIST	COUNTY	ROUTE	POST MILES TOTAL PROJECT	SHEET No	TOTAL SHEETS
12	Ora	22,405, 605	R0.3/R0.9, 22.3/24.0,3.0/R1.6	1664	1929

REGISTERED CIVIL ENGINEER 07-27-09 DATE

2-1-10
PLANS APPROVAL DATE

REGISTERED PROFESSIONAL ENGINEER A. Priley No. C 73375 Exp. 12-31-10 CIVIL STATE OF CALIFORNIA

The State of California or its officers or agents shall not be responsible for the accuracy or completeness of electronic copies of this plan sheet.

OCTA
550 SOUTH MAIN STREET
ORANGE, CA 92863

TRC
21 TECHNOLOGY DR
IRVINE, CA 92618

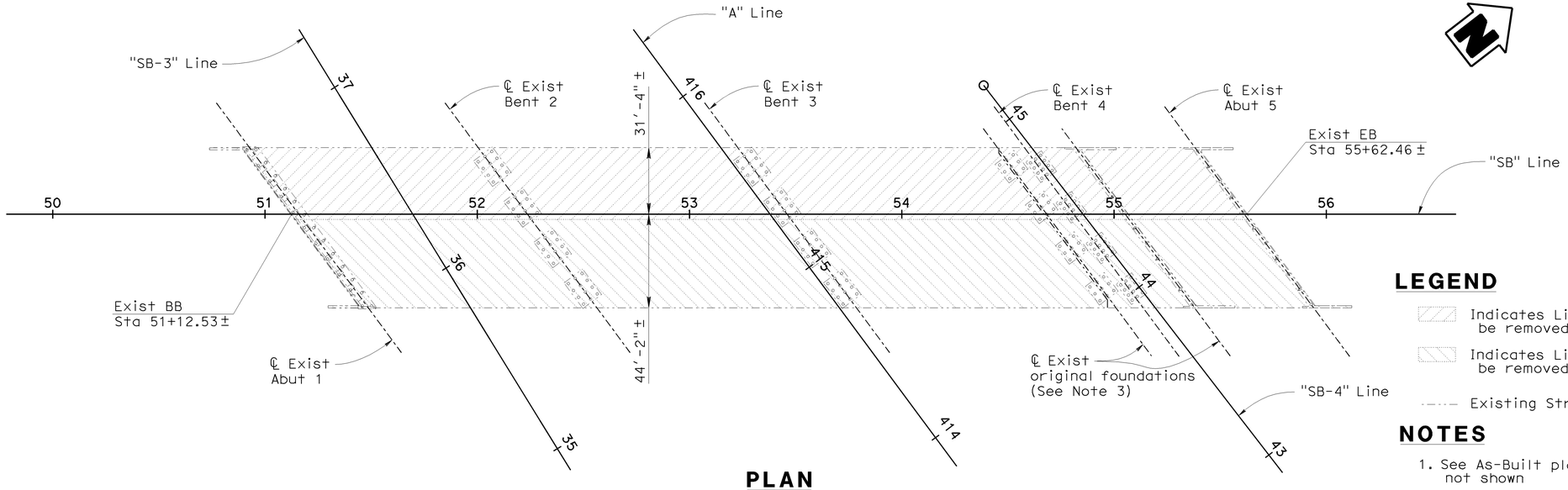

PLAN
1"= 30'

LEGEND

Indicates Limits of Existing Br No. 55-0365 to be removed in Stage 1

Indicates Limits of Existing Br No. 55-0365 to be removed in Stage 2

Existing Structure

NOTES

1. See As-Built plans for dimensions, details and information not shown
2. Remove top of pile to elevation shown in Existing Piling Removal Limits Table
3. Existing structure was lengthened in 1971. Approximate locations of existing foundations from original bridge construction are indicated in Plan view. Removal of original foundations and piles is not required
4. Existing fiber optics/tv cable line to be relocated. See "Utility Plans"
5. Temporary supports shall be designed for 100% of the dead load plus 100% live load plus impact
6. All loads shown are in addition to those required for falsework construction as specified in Caltrans Standard Specifications Section 51-1.06. All loads shown are unfactored. Live load is HS20 load only
7. Temporary supports shall be preloaded to 75% of the dead loads shown at each girder prior to any bridge removal

* Measured perpendicular to "SB" Line

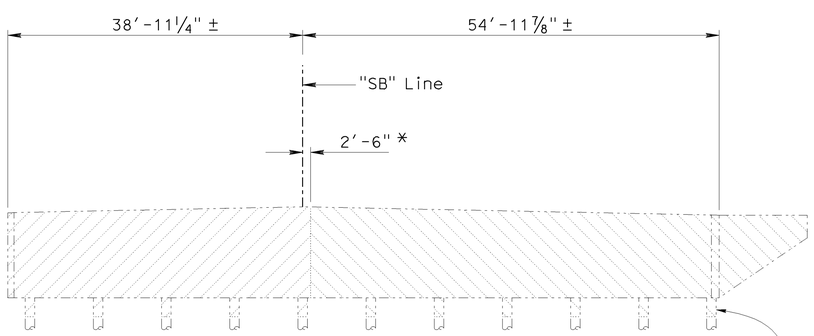

ABUTMENT ELEVATION
1"= 10'
(Exist Abut 5 shown, exist Abut 1 similar)

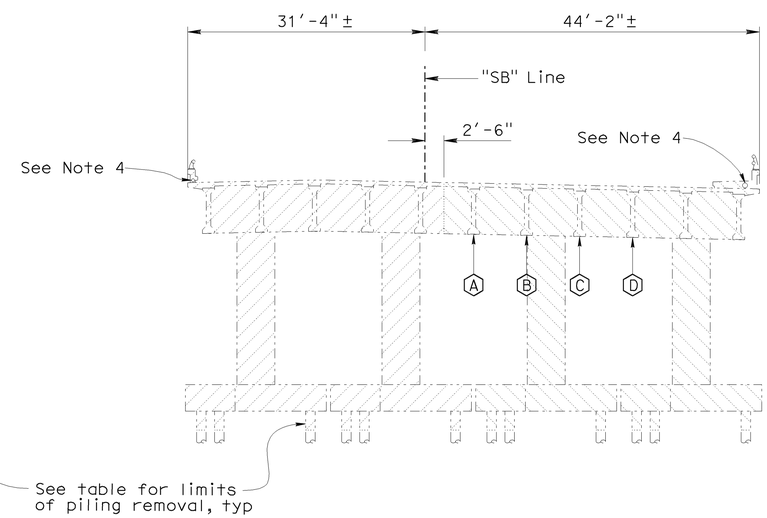

TYPICAL SECTION AT BENT
1"= 10'

MINIMUM TEMPORARY SUPPORT DESIGN LOADING

	Dead Load		Live Load + Impact	
Location	A	B, C and D	A	B, C and D
Bent 2	260 k	230 k	95 k	90 k
Bent 3	270 k	240 k	95 k	90 k
Bent 4	325 k	275 k	80 k	75 k
Minimum Design Lateral Load = 0.02 Dead Load				

EXISTING PILING REMOVAL LIMITS TABLE

Existing Bridge Location	Abut 1	Bent 2	Bent 3	Bent 4	Abut 5
Pile Removal Elevation (ft)	12.00±	10.50±	6.00±	7.00±	22.00±

NOTE:
THE CONTRACTOR SHALL VERIFY ALL CONTROLLING FIELD DIMENSIONS BEFORE ORDERING OR FABRICATING ANY MATERIAL.

Sudhakar Vatti
DESIGN OVERSIGHT Sudhakar Vatti
8-10-09
SIGN OFF DATE

	BY	CHECKED
DESIGN	A. Priley	J. Hermstad
DETAILS	K. Michalski	J. Hermstad
QUANTITIES	A. Priley	J. Wong

PREPARED FOR THE STATE OF CALIFORNIA DEPARTMENT OF TRANSPORTATION

A. Priley
PROJECT ENGINEER

BRIDGE NO. 55-1099
POST MILE 22.64

SEAL BEACH BLVD OC (REPLACE)
BRIDGE REMOVAL DETAILS

DESIGN DETAIL SHEET (ENGLISH) (REV. 2/25/05)

ORIGINAL SCALE IN INCHES FOR REDUCED PLANS 0 1 2 3

CU 12235
EA 071631

DISREGARD PRINTS BEARING EARLIER REVISION DATES

REVISION DATES (PRELIMINARY STAGE ONLY) 09/17/08 04/06/09 07/27/09

SHEET 6 OF 45

FILE => 55-1099-d-rem01.dgn

USERNAME => trhenard DATE PLOTTED => 04-FEB-2010 TIME PLOTTED => 06:16

DIST	COUNTY	ROUTE	POST MILES TOTAL PROJECT	SHEET No	TOTAL SHEETS
12	Ora	22,405, 605	R0.3/R0.9, 22.3/24.0,3.0/R1.6	1665	1929

REGISTERED CIVIL ENGINEER 07-27-09 DATE

2-1-10
PLANS APPROVAL DATE

The State of California or its officers or agents shall not be responsible for the accuracy or completeness of electronic copies of this plan sheet.

REGISTERED PROFESSIONAL ENGINEER A. Priley No. C 73375 Exp. 12-31-10 CIVIL STATE OF CALIFORNIA

OCTA
550 SOUTH MAIN STREET
ORANGE, CA 92863

TRC
21 TECHNOLOGY DR
IRVINE, CA 92618

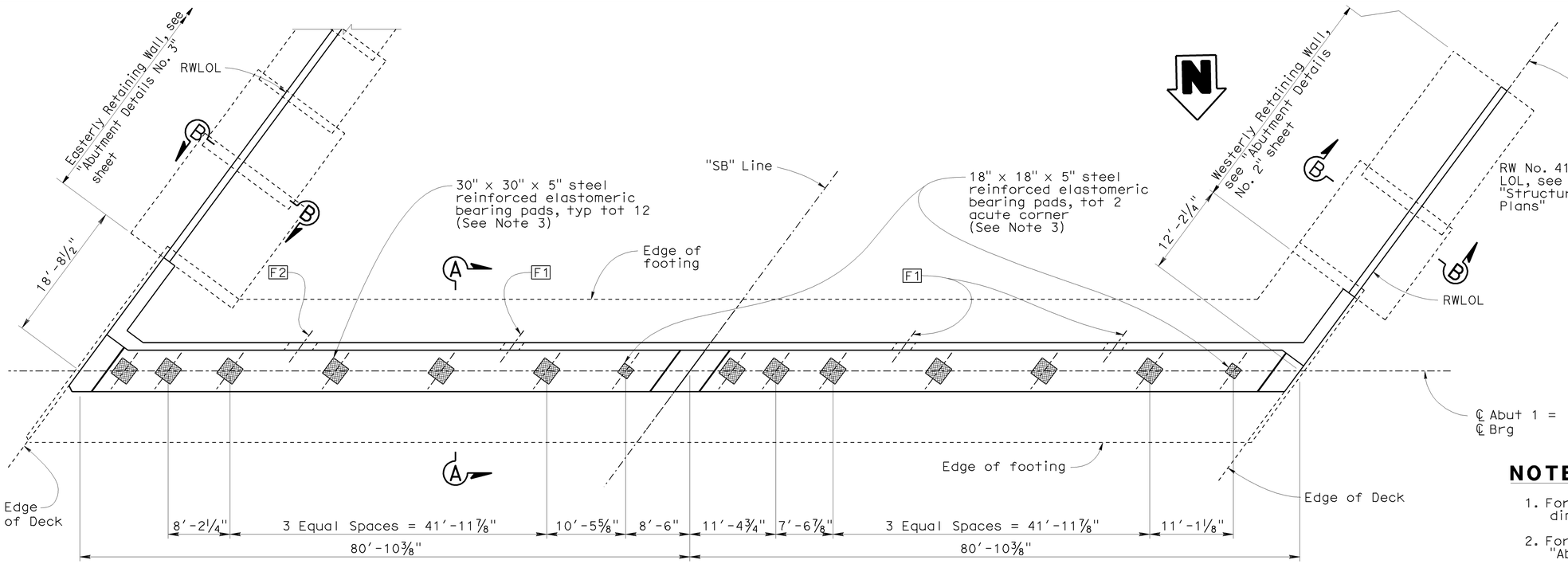

PLAN

⅛"= 1'-0"

UTILITIES

F1 Future Utility (24" Dia Casing)

F2 Future Utility (36" Dia Casing)

NOTES

1. For abutment pile locations and footing dimensions, see "Abutment Pile Layout" sheet
2. For Sections A-A and B-B, see "Abutment Details No. 1" sheet
3. For Typical Bearing Pad Detail, see "Abutment Details No. 8" sheet
4. Outer 6" of expanded polystyrene to be removed after construction
5. For fractured rib texture and details, see "Architectural Details No. 1" thru "Architectural Details No. 3" sheets

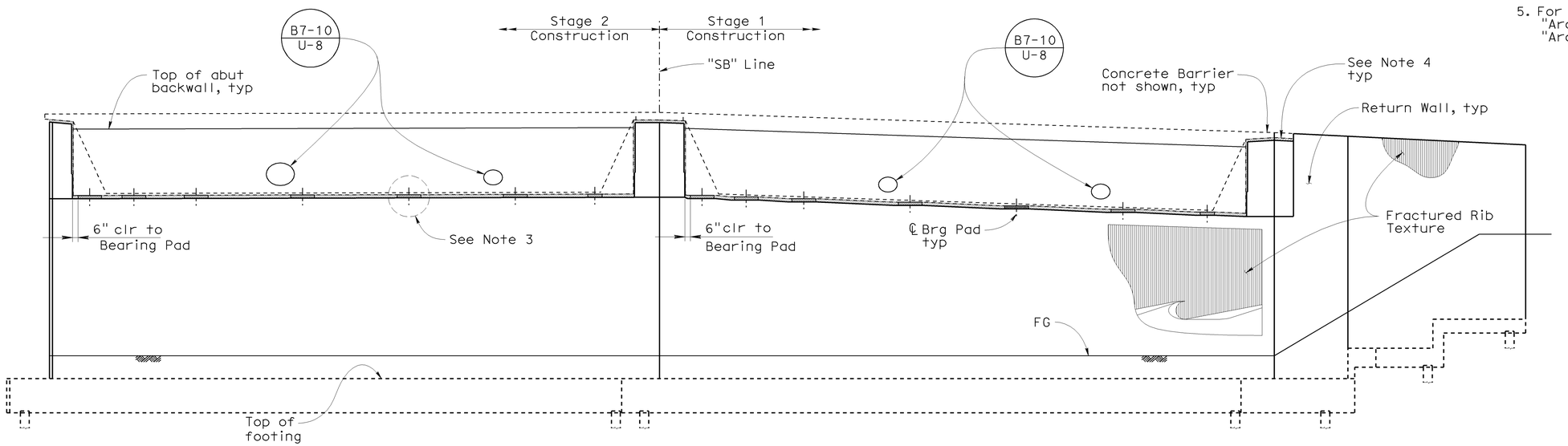

ELEVATION

⅛"= 1'-0"

Note: Not all piles shown

Sudhakar Vatti
DESIGN OVERSIGHT Sudhakar Vatti

8-10-09
SIGN OFF DATE

	BY	CHECKED
DESIGN	A. Priley	J. Hermstad
DETAILS	K. Michalski	J. Hermstad
QUANTITIES	A. Priley	J. Wong

PREPARED FOR THE STATE OF CALIFORNIA DEPARTMENT OF TRANSPORTATION

A. Priley
PROJECT ENGINEER

BRIDGE NO. 55-1099
POST MILE 22.64

SEAL BEACH BLVD OC (REPLACE)
ABUTMENT 1 LAYOUT

DESIGN DETAIL SHEET (ENGLISH) (REV. 2/25/05)

ORIGINAL SCALE IN INCHES FOR REDUCED PLANS 0 1 2 3

CU 12235
EA 071631

DISREGARD PRINTS BEARING EARLIER REVISION DATES

REVISION DATES (PRELIMINARY STAGE ONLY) 09/17/08 04/06/09 07/27/09

SHEET 7 OF 45

FILE => 55-1099-f-a01.dgn

USERNAME => trlenard DATE PLOTTED => 04-FEB-2010 TIME PLOTTED => 08:16

DIST	COUNTY	ROUTE	POST MILES TOTAL PROJECT	SHEET No	TOTAL SHEETS
12	Ora	22,405, 605	R0.3/R0.9, 22.3/24.0,3.0/R1.6	1666	1929

REGISTERED CIVIL ENGINEER 07-27-09 DATE

2-1-10
PLANS APPROVAL DATE

REGISTERED PROFESSIONAL ENGINEER A. Priley No. C 73375 Exp. 12-31-10 CIVIL STATE OF CALIFORNIA

The State of California or its officers or agents shall not be responsible for the accuracy or completeness of electronic copies of this plan sheet.

OCTA
550 SOUTH MAIN STREET
ORANGE, CA 92863

TRC
21 TECHNOLOGY DR
IRVINE, CA 92618

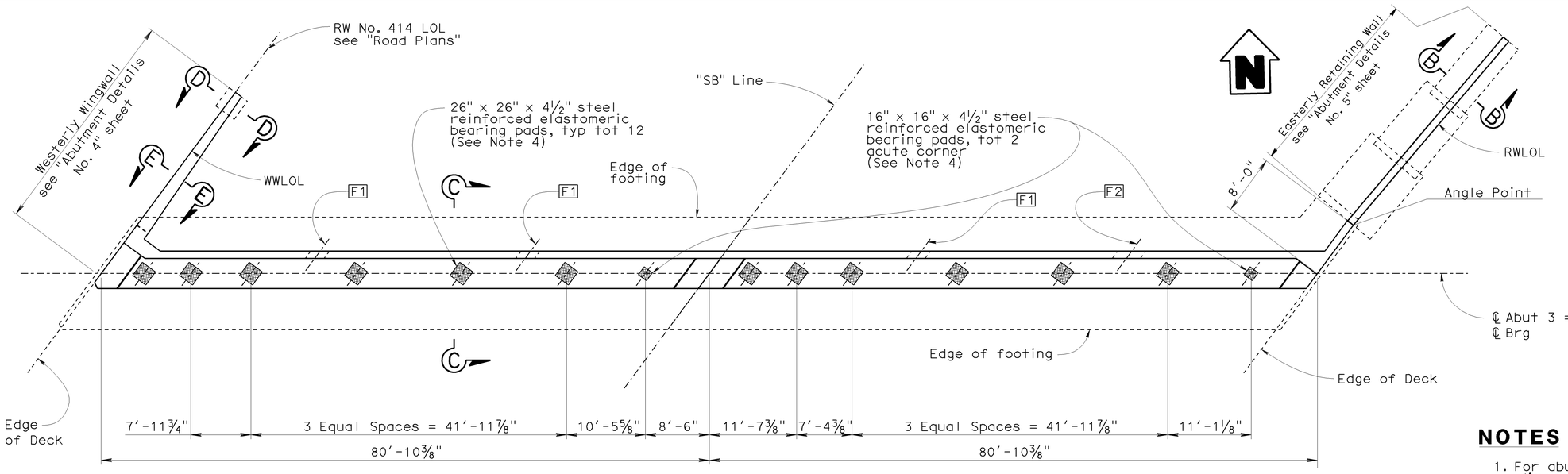

PLAN

⅛"= 1'-0"

UTILITIES

F1 Future Utility (24" Dia Casing)

F2 Future Utility (36" Dia Casing)

NOTES

1. For abutment pile locations and footing dimensions, see "Abutment Pile Layout" sheet
2. For Sections B-B and C-C, see "Abutment Details No. 1" sheet
3. For Sections D-D and E-E, see "Abutment Details No. 4" sheet
4. For Typical Bearing Pad Detail, see "Abutment Details No. 8" sheet
5. Outer 6" of expanded polystyrene to be removed after construction
6. For fractured rib texture and details, see "Architectural Details No. 1" thru "Architectural Details No. 3" sheets

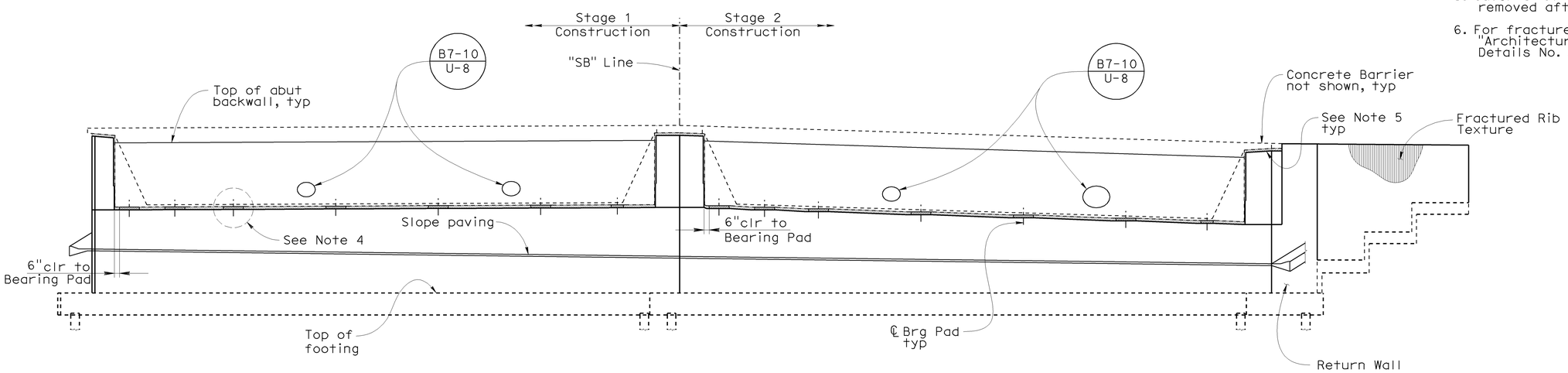

ELEVATION

⅛"= 1'-0"

Note: Not all piles shown

Sudhakar Vatti
DESIGN OVERSIGHT Sudhakar Vatti
8-10-09
SIGN OFF DATE

	BY	CHECKED
DESIGN	A. Priley	J. Hermstad
DETAILS	K. Michalski	J. Hermstad
QUANTITIES	A. Priley	J. Wong

PREPARED FOR THE STATE OF CALIFORNIA DEPARTMENT OF TRANSPORTATION

A. Priley
PROJECT ENGINEER

BRIDGE NO. 55-1099
POST MILE 22.64

SEAL BEACH BLVD OC (REPLACE)
ABUTMENT 3 LAYOUT

DESIGN DETAIL SHEET (ENGLISH) (REV. 2/25/05)

ORIGINAL SCALE IN INCHES FOR REDUCED PLANS 0 1 2 3

CU 12235
EA 071631

DISREGARD PRINTS BEARING EARLIER REVISION DATES → 09/17/08 04/06/09 07/27/09

REVISION DATES (PRELIMINARY STAGE ONLY)

SHEET 8 OF 45

FILE => 55-1099-f-a02.dgn

USERNAME => trlenard DATE PLOTTED => 04-FEB-2010 TIME PLOTTED => 06:16

DIST	COUNTY	ROUTE	POST MILES TOTAL PROJECT	SHEET No	TOTAL SHEETS
12	Ora	22,405, 605	R0.3/R0.9, 22.3/24.0,3.0/R1.6	1667	1929

REGISTERED CIVIL ENGINEER 07-27-09 DATE

2-1-10
PLANS APPROVAL DATE

REGISTERED PROFESSIONAL ENGINEER A. Priley No. C 73375 Exp. 12-31-10 CIVIL STATE OF CALIFORNIA

The State of California or its officers or agents shall not be responsible for the accuracy or completeness of electronic copies of this plan sheet.

OCTA
550 SOUTH MAIN STREET
ORANGE, CA 92863

TRC
21 TECHNOLOGY DR
IRVINE, CA 92618

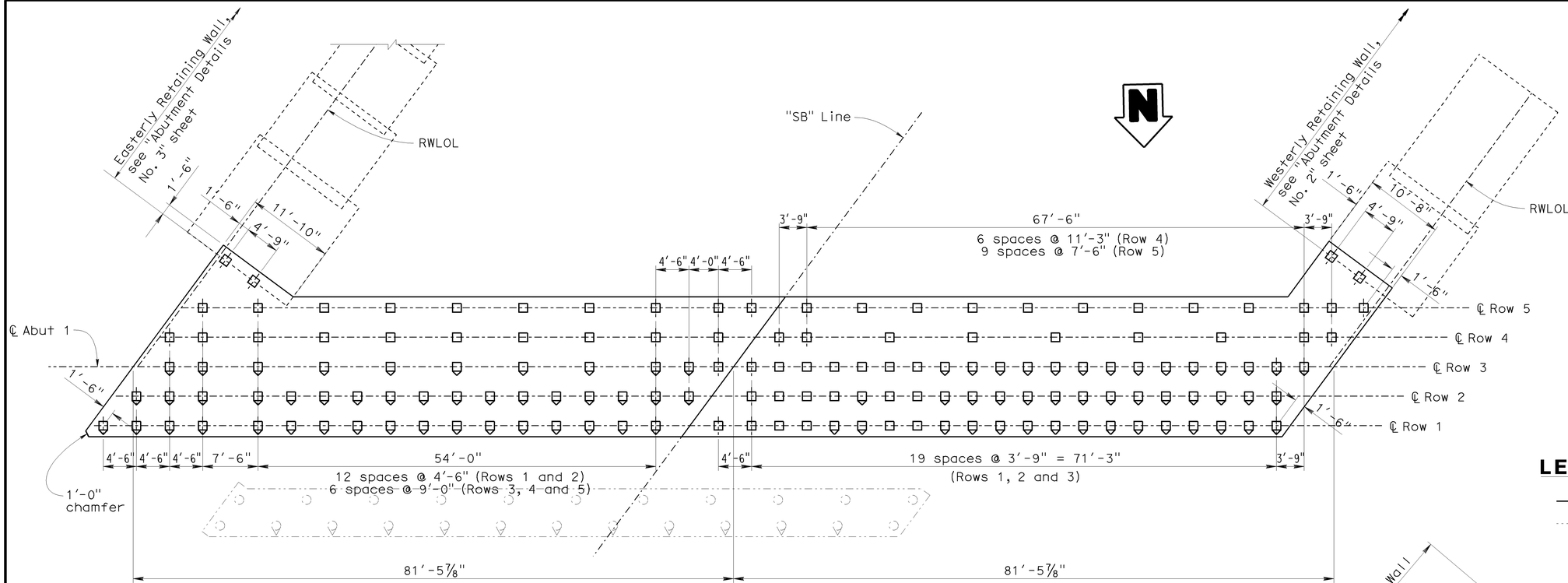

ABUTMENT 1 FOOTING PLAN

⅛"= 1'-0"

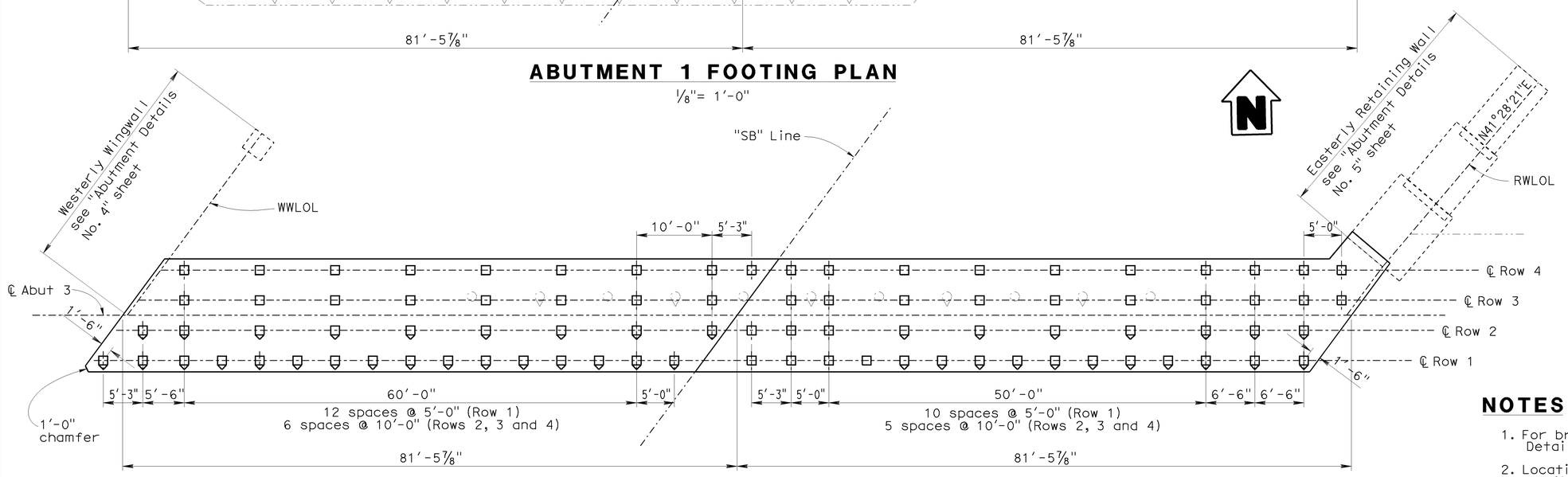

ABUTMENT 3 FOOTING PLAN

⅛"= 1'-0"

LEGEND

- New Structure
- Existing Structure
- Indicates approximate location of exist piling
- Indicates approximate location of exist piling (Battered)
- Indicates Class 200, Alt "X" Pile
- Indicates Class 200, Alt "X" Pile (Battered 3:1)

NOTES

1. For bridge removal details, see "Bridge Removal Details" sheet
2. Location of piling may be adjusted to avoid conflicts with existing piling, as permitted by the Engineer
3. Locations of existing piling and foundations are approximate

NOTE:
THE CONTRACTOR SHALL VERIFY ALL CONTROLLING FIELD DIMENSIONS BEFORE ORDERING OR FABRICATING ANY MATERIAL.

Sudhakar Vatti
DESIGN OVERSIGHT Sudhakar Vatti
8-10-09
SIGN OFF DATE

	BY	CHECKED
DESIGN	A. Priley	J. Hermstad
DETAILS	K. Michalski	J. Hermstad
QUANTITIES	A. Priley	J. Wong

PREPARED FOR THE STATE OF CALIFORNIA DEPARTMENT OF TRANSPORTATION

A. Priley
PROJECT ENGINEER

BRIDGE NO. 55-1099
POST MILE 22.64

SEAL BEACH BLVD OC (REPLACE)
ABUTMENT PILE LAYOUT

DESIGN DETAIL SHEET (ENGLISH) (REV. 2/25/05)

ORIGINAL SCALE IN INCHES FOR REDUCED PLANS 0 1 2 3

CU 12235
EA 071631

DISREGARD PRINTS BEARING EARLIER REVISION DATES
REVISION DATES (PRELIMINARY STAGE ONLY) 09/17/08 04/06/09 07/27/09

SHEET 9 OF 45

FILE => 55-1099-f-a03.dgn

USERNAME => trlenard DATE PLOTTED => 04-FEB-2010 TIME PLOTTED => 06:16

DIST	COUNTY	ROUTE	POST MILES TOTAL PROJECT	SHEET No	TOTAL SHEETS
12	Ora	22,405, 605	R0.3/R0.9, 22.3/24.0,3.0/R1.6	1668	1929

REGISTERED CIVIL ENGINEER 07-27-09 DATE

2-1-10
PLANS APPROVAL DATE

REGISTERED PROFESSIONAL ENGINEER A. Priley No. C 73375 Exp. 12-31-10 CIVIL STATE OF CALIFORNIA

The State of California or its officers or agents shall not be responsible for the accuracy or completeness of electronic copies of this plan sheet.

OCTA
550 SOUTH MAIN STREET
ORANGE, CA 92863

TRC
21 TECHNOLOGY DR
IRVINE, CA 92618

LEGEND

Indicates headed bar reinforcement

Indicates bundled bars

NOTES

1. For location of Sections A-A, B-B and C-C, see "Abutment 1 Layout" and "Abutment 2 Layout" sheets
2. For pile locations and footing dimensions, see "Abutment Pile Layout" sheet
3. For Detail 1, see "Abutment Details No. 7" sheet
4. For drainage details, see "Structure Approach Drainage Details" sheet
5. For abutment hanger bars at shear keys, see Typical Exterior Shear Key Elevation on "Abutment Details No. 6" sheet
6. For abutment footing corner reinforcement details, see "Abutment Details No. 7" sheet
7. For concrete barrier details, see "Miscellaneous Details" sheet
8. Retaining wall Type 1 dimensions to follow Standard Plan B3-1 except as shown

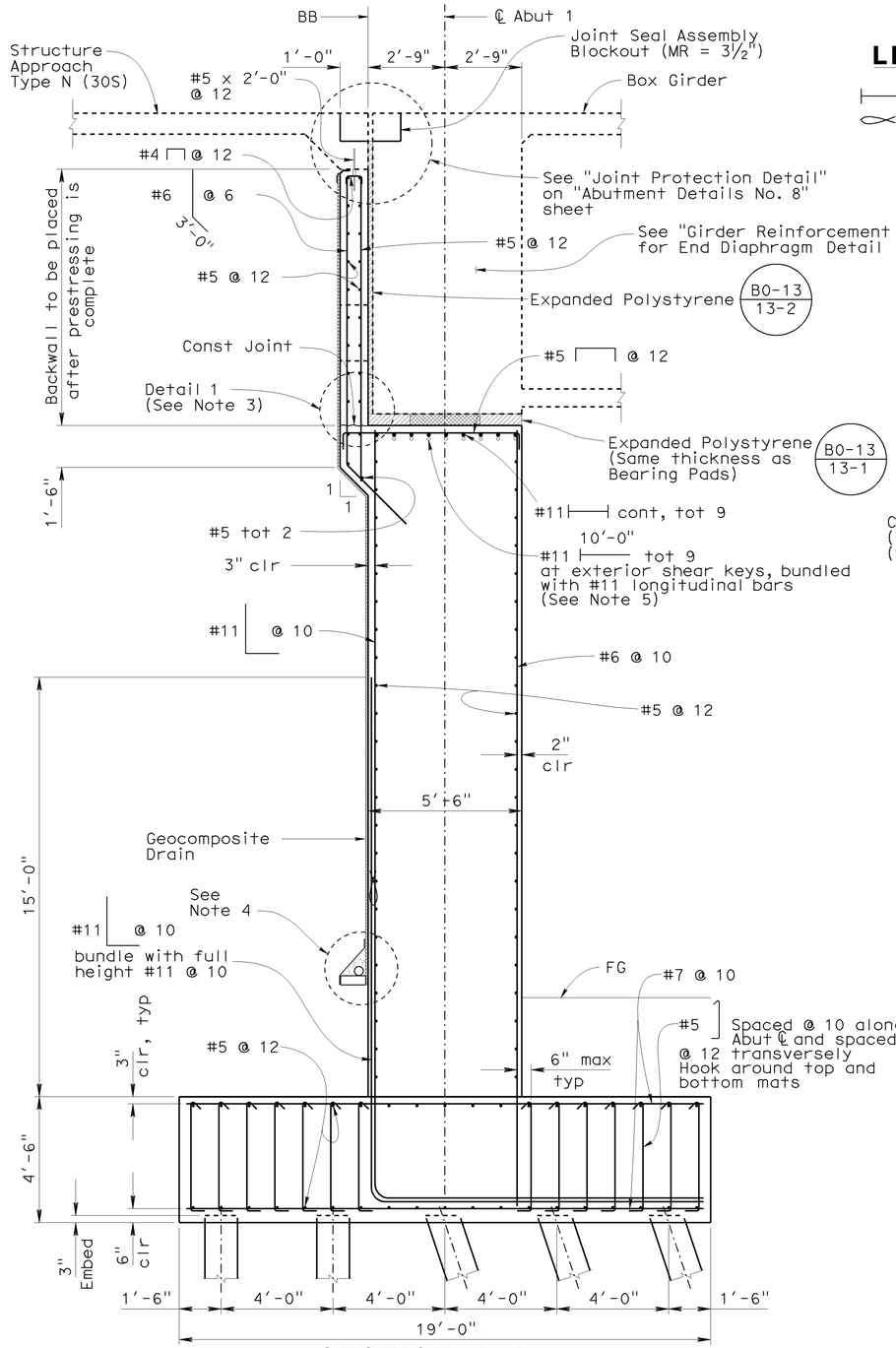

SECTION A-A
⅜"= 1'-0"

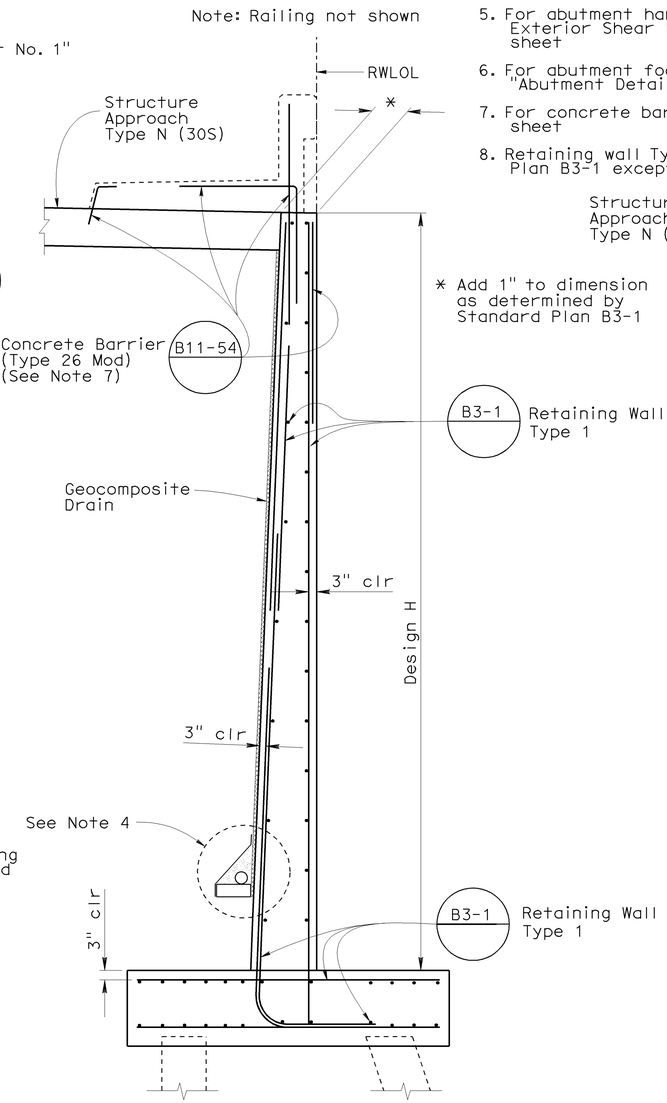

SECTION B-B B3-1
½"= 1'-0"

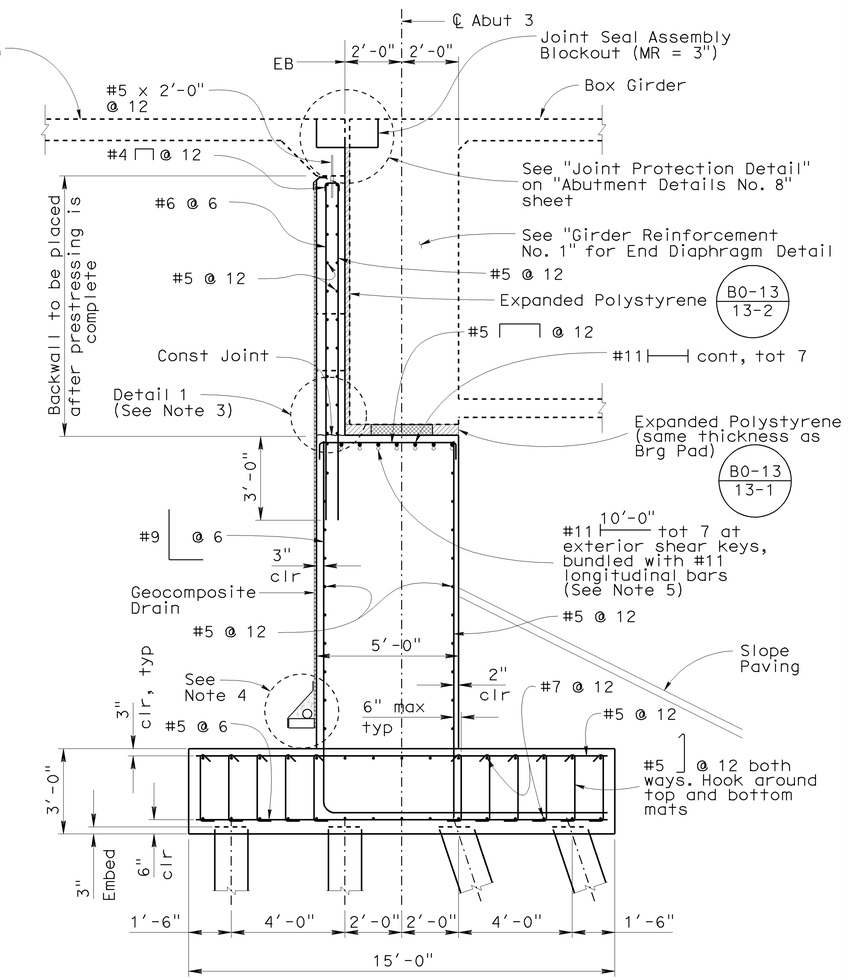

SECTION C-C
⅜"= 1'-0"

Sudhakar Vatti
DESIGN OVERSIGHT Sudhakar Vatti
8-10-09
SIGN OFF DATE

	BY	CHECKED
DESIGN	A. Priley	J. Hermstad
DETAILS	K. Michalski	J. Hermstad
QUANTITIES	A. Priley	J. Wong

PREPARED FOR THE STATE OF CALIFORNIA DEPARTMENT OF TRANSPORTATION

A. Priley
PROJECT ENGINEER

BRIDGE NO. 55-1099
POST MILE 22.64

SEAL BEACH BLVD OC (REPLACE)
ABUTMENT DETAILS NO. 1

DESIGN DETAIL SHEET (ENGLISH) (REV. 2/25/05)

ORIGINAL SCALE IN INCHES FOR REDUCED PLANS 0 1 2 3

CU 12235
EA 071631

DISREGARD PRINTS BEARING EARLIER REVISION DATES

REVISION DATES (PRELIMINARY STAGE ONLY) 09/17/08 04/06/09 07/27/09

SHEET 10 OF 45

FILE => 55-1099-f-adt01.dgn

USERNAME => trienard DATE PLOTTED => 04-FEB-2010 TIME PLOTTED => 06:16

DIST	COUNTY	ROUTE	POST MILES TOTAL PROJECT	SHEET No	TOTAL SHEETS
12	Ora	22,405, 605	R0.3/R0.9, 22.3/24.0,3.0/R1.6	1669	1929

REGISTERED CIVIL ENGINEER 07-27-09 DATE

2-1-10
PLANS APPROVAL DATE

REGISTERED PROFESSIONAL ENGINEER A. Priley No. C 73375 Exp. 12-31-10 CIVIL STATE OF CALIFORNIA

The State of California or its officers or agents shall not be responsible for the accuracy or completeness of electronic copies of this plan sheet.

OCTA
550 SOUTH MAIN STREET
ORANGE, CA 92863

TRC
21 TECHNOLOGY DR
IRVINE, CA 92618

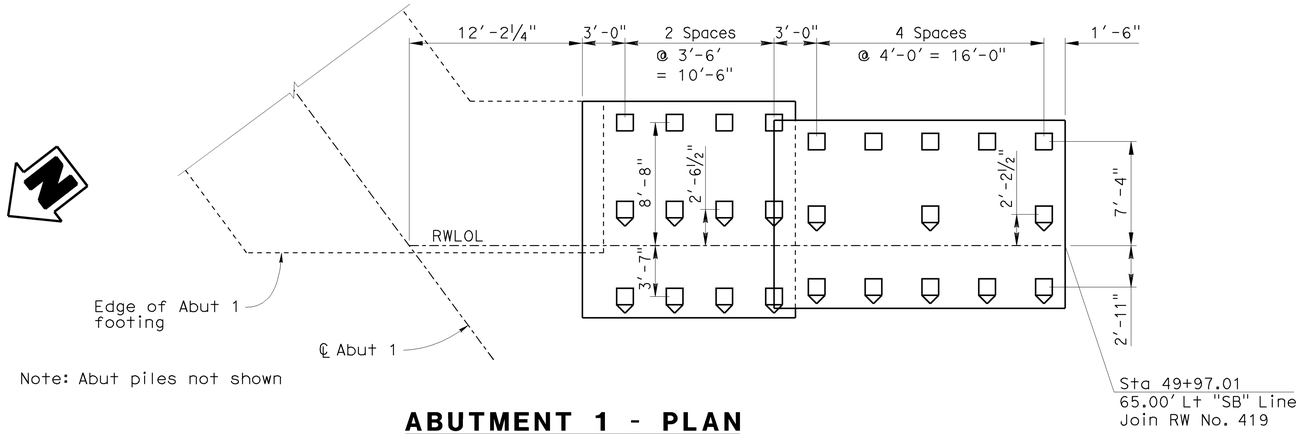

Note: Abut piles not shown

ABUTMENT 1 - PLAN
WESTERLY RETAINING WALL

3/16"= 1'-0"

NOTES

1. For additional pile and footing information, see "Foundation Plan" and "Abutment Pile Layout" sheets
2. For Section B-B, see "Abutment Details No. 1" sheet
3. For drainage details, see "Structure Approach Drainage Details" sheet
4. Retaining wall shall be in accordance with Std Plan B3-1, except as noted
5. For bottom of footing elevations, see "Foundation Plan" sheet
6. For additional shear key information, see "Abutment Details No. 6" sheet
7. Mandatory joint surface to be smooth and lined with 15 pound construction paper
8. For fractured rib texture and details, see "Architectural Details No. 1" thru "Architectural Details No. 3" sheets

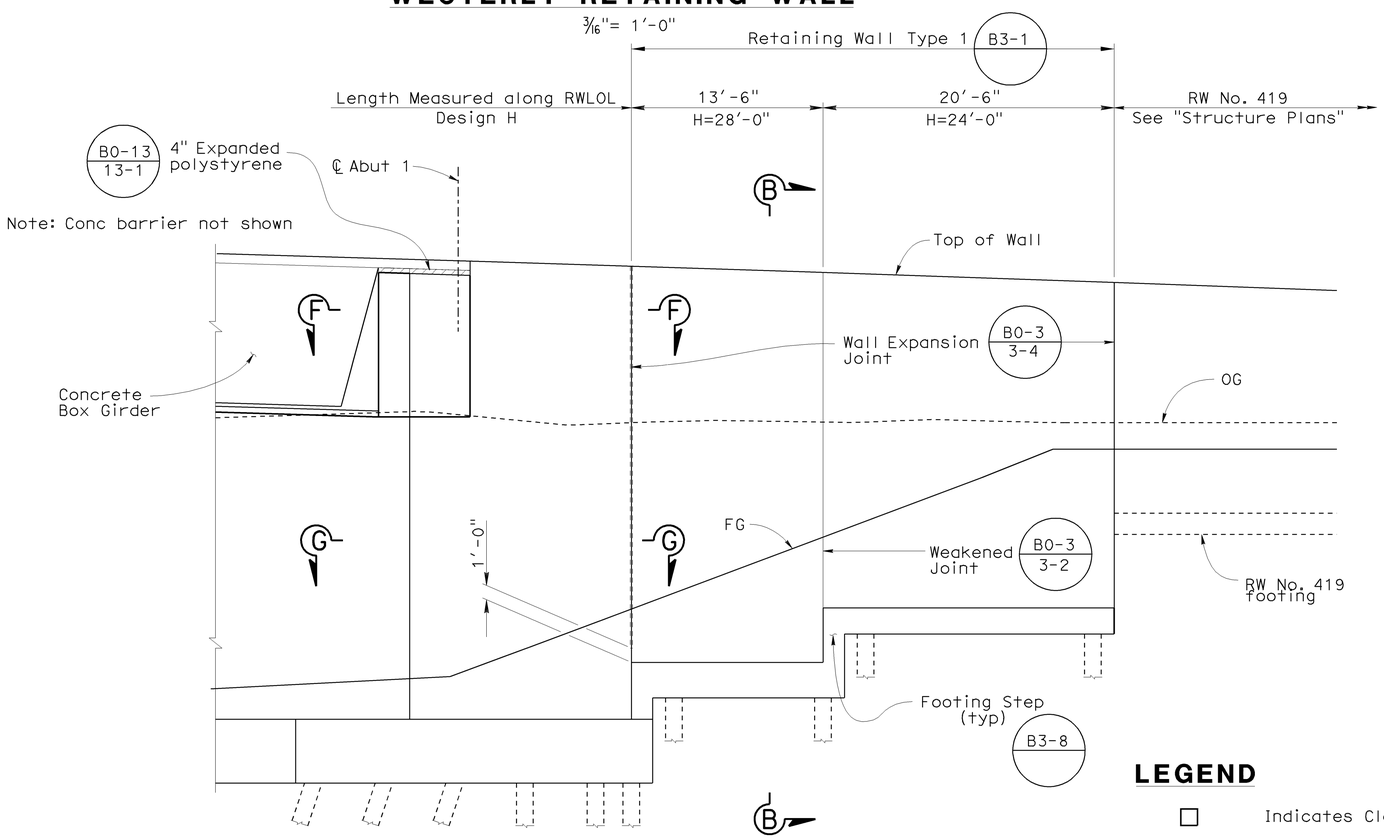

Note: Conc barrier not shown

Note: Not all piles shown

ABUTMENT 1 - ELEVATION
WESTERLY RETAINING WALL

3/16"= 1'-0"

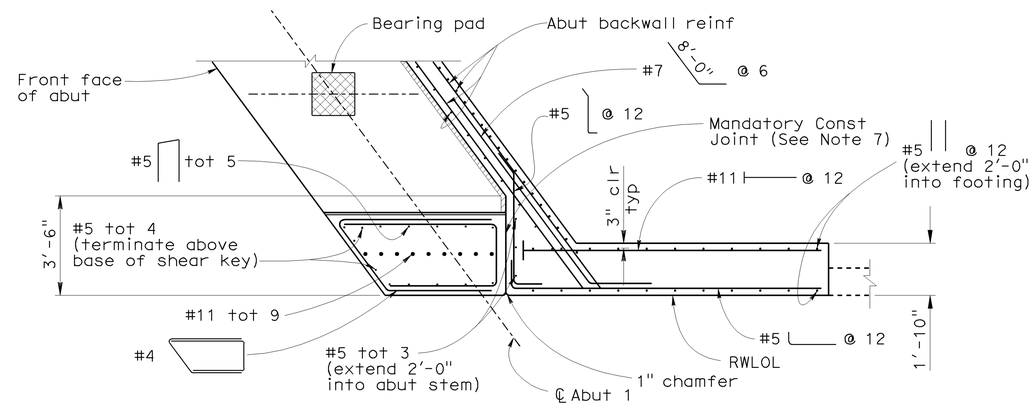

SECTION F-F

3/8"= 1'-0"

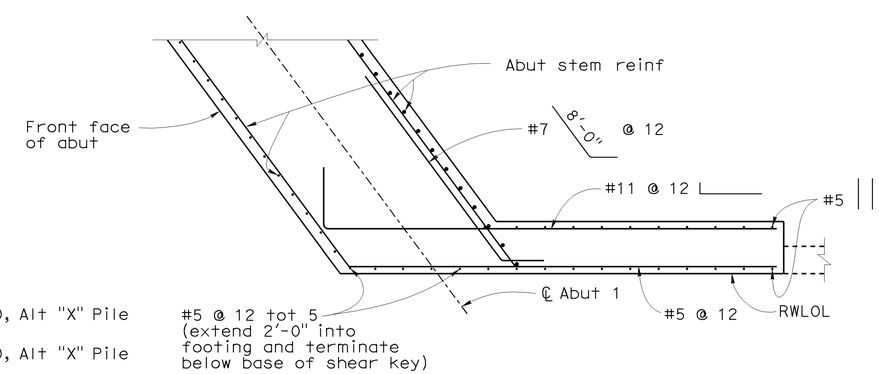

SECTION G-G

3/8"= 1'-0"

LEGEND

- □ Indicates Class 200, Alt "X" Pile
- ⌂ Indicates Class 200, Alt "X" Pile (Battered 3:1)
- ⊢ Indicates headed bar reinforcement

Sudhakar Vatti
DESIGN OVERSIGHT Sudhakar Vatti
8-10-09
SIGN OFF DATE

	BY	CHECKED
DESIGN	A. Priley	J. Hermstad
DETAILS	K. Michalski	J. Hermstad
QUANTITIES	A. Priley	J. Wong

PREPARED FOR THE STATE OF CALIFORNIA DEPARTMENT OF TRANSPORTATION

A. Priley
PROJECT ENGINEER

BRIDGE NO. 55-1099
POST MILE 22.64

SEAL BEACH BLVD OC (REPLACE)
ABUTMENT DETAILS NO. 2

DESIGN DETAIL SHEET (ENGLISH) (REV. 2/25/05)

ORIGINAL SCALE IN INCHES FOR REDUCED PLANS 0 1 2 3

CU 12235
EA 071631

DISREGARD PRINTS BEARING EARLIER REVISION DATES
REVISION DATES (PRELIMINARY STAGE ONLY) 09/17/08 04/06/09 07/27/09

SHEET 11 OF 45

FILE => 55-1099-f-adt02.dgn

USERNAME => friehard DATE PLOTTED => 04-FEB-2010 TIME PLOTTED => 06:17

DIST	COUNTY	ROUTE	POST MILES TOTAL PROJECT	SHEET No	TOTAL SHEETS
12	Ora	22,405, 605	R0.3/R0.9, 22.3/24.0,3.0/R1.6	1670	1929

REGISTERED CIVIL ENGINEER 07-27-09 DATE

2-1-10
PLANS APPROVAL DATE

REGISTERED PROFESSIONAL ENGINEER A. Priley No. C 73375 Exp. 12-31-10 CIVIL STATE OF CALIFORNIA

The State of California or its officers or agents shall not be responsible for the accuracy or completeness of electronic copies of this plan sheet.

OCTA
550 SOUTH MAIN STREET
ORANGE, CA 92863

TRC
21 TECHNOLOGY DR
IRVINE, CA 92618

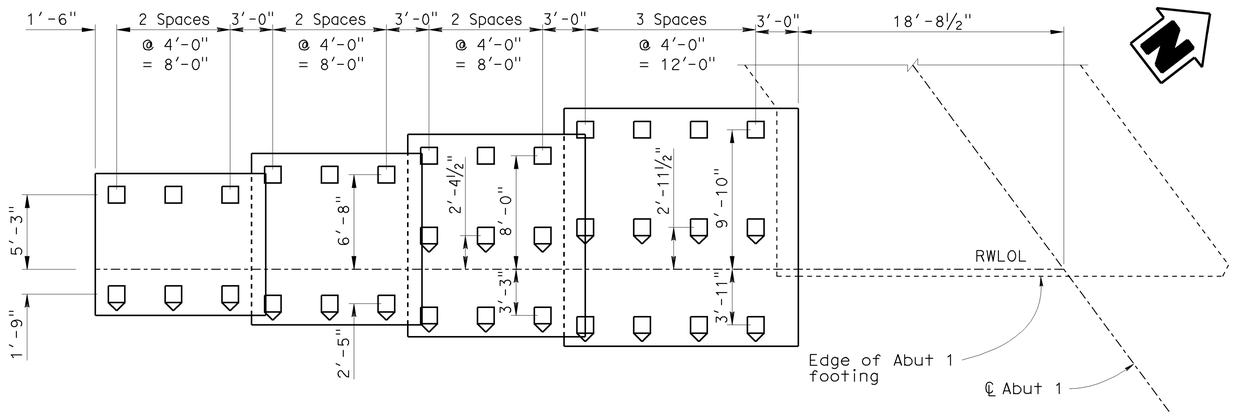

Note: Abut piles not shown

ABUTMENT 1 - PLAN
EASTERLY RETAINING WALL

3/16" = 1'-0"

NOTES

1. For additional pile and footing information, see "Foundation Plan" and "Abutment Pile Layout" sheets
2. For Section B-B, see "Abutment Details No. 1" sheet
3. For drainage details, see "Structure Approach Drainage Details" sheet
4. Retaining wall shall be in accordance with Std Plan B3-1, except as noted
5. For bottom of footing elevations, see "Foundation Plan" sheet
6. For additional shear key information, see "Abutment Details No. 6" sheet
7. Mandatory joint surface to be smooth and lined with 15 pound construction paper
8. For fractured rib texture and details, see "Architectural Details No. 1" thru "Architectural Details No. 3" sheets

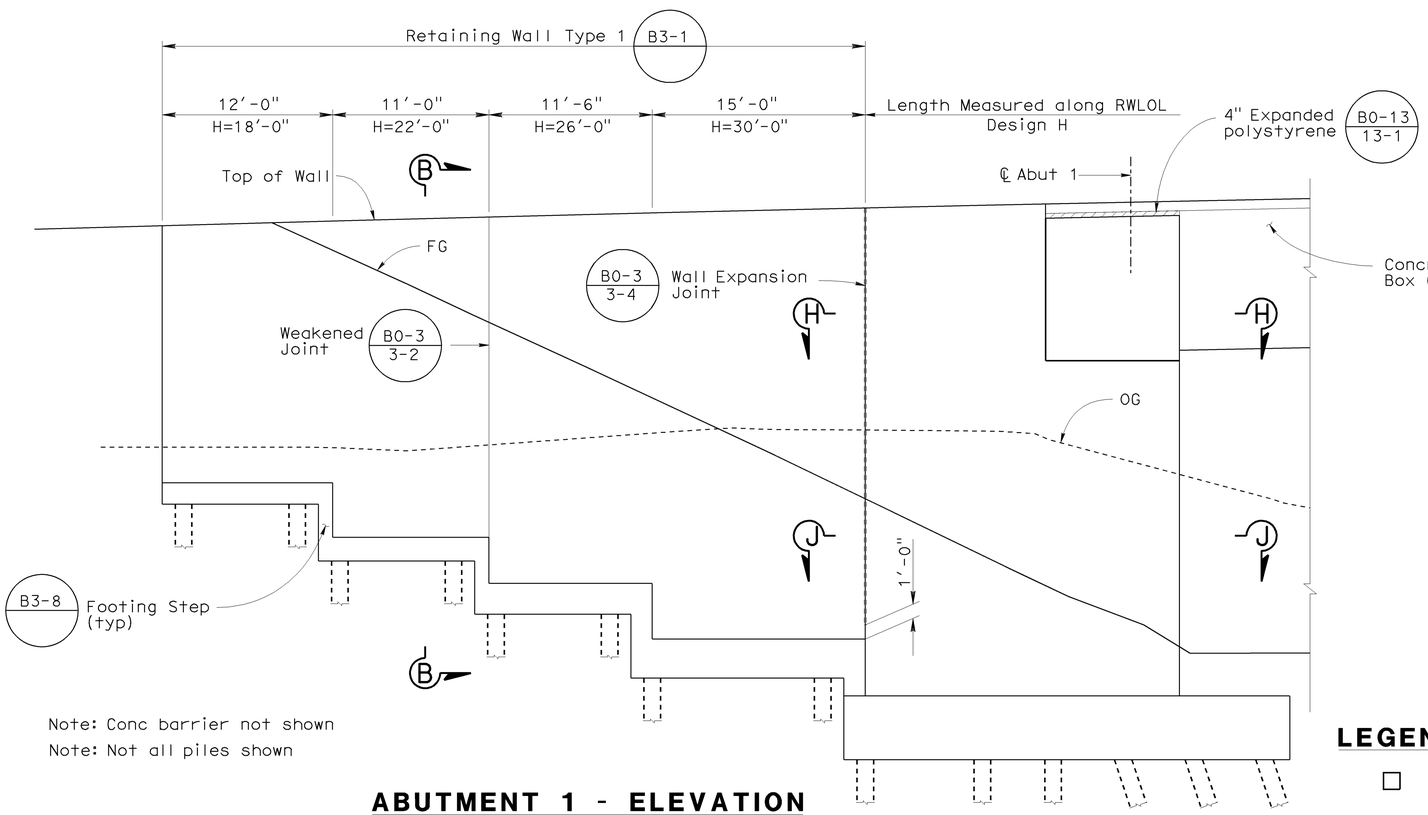

Note: Conc barrier not shown

Note: Not all piles shown

ABUTMENT 1 - ELEVATION
EASTERLY RETAINING WALL

3/16" = 1'-0"

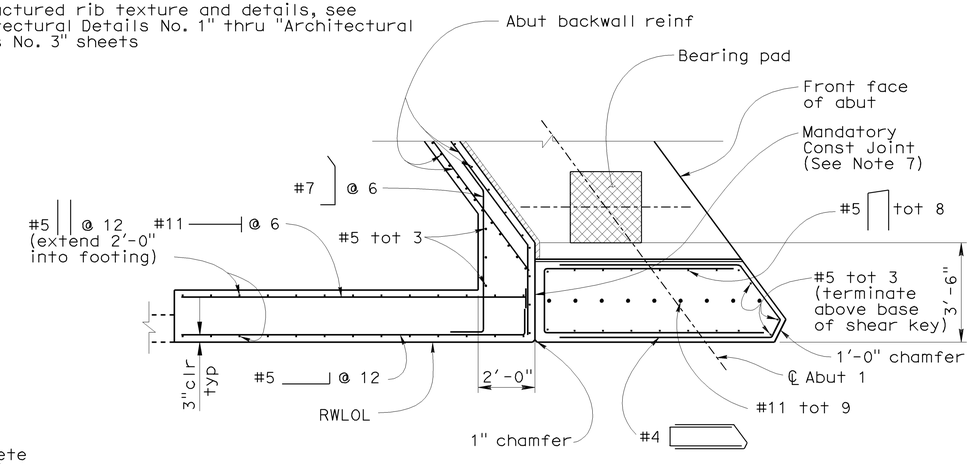

SECTION H-H

3/8" = 1'-0"

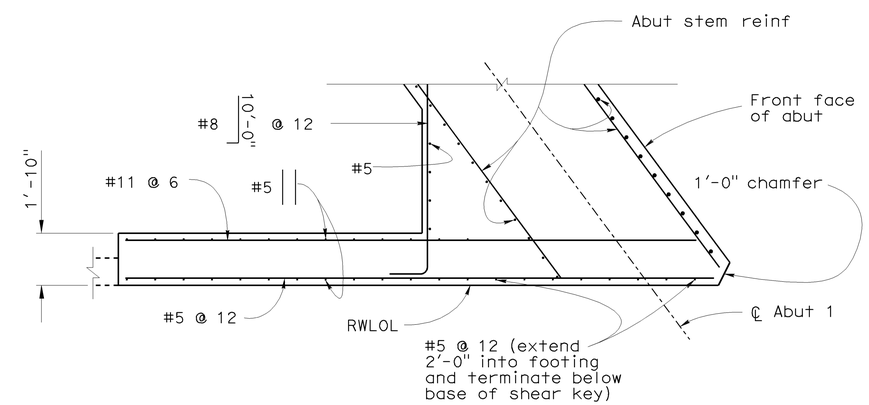

SECTION J-J

3/8" = 1'-0"

LEGEND

- Indicates Class 200, Alt "X" Pile
- Indicates Class 200, Alt "X" Pile (Battered 3:1)
- Indicates headed bar reinforcement

Sudhakar Vatti DESIGN OVERSIGHT Sudhakar Vatti 8-10-09 SIGN OFF DATE	DESIGN	BY A. Priley	CHECKED J. Hermstad	PREPARED FOR THE STATE OF CALIFORNIA DEPARTMENT OF TRANSPORTATION	A. Priley PROJECT ENGINEER
	DETAILS	BY K. Michalski	CHECKED J. Hermstad		
	QUANTITIES	BY A. Priley	CHECKED J. Wong		

BRIDGE NO. 55-1099
POST MILE 22.64

SEAL BEACH BLVD OC (REPLACE)
ABUTMENT DETAILS NO. 3

DESIGN DETAIL SHEET (ENGLISH) (REV. 2/25/05)

ORIGINAL SCALE IN INCHES FOR REDUCED PLANS 0 1 2 3

CU 12235
EA 071631

DISREGARD PRINTS BEARING EARLIER REVISION DATES → REVISION DATES (PRELIMINARY STAGE ONLY) ~~09/17/08~~ ~~04/06/09~~ 07/27/09

SHEET 12 OF 45

FILE => 55-1099-f-adt03.dgn

USERNAME => trlenard DATE PLOTTED => 04-FEB-2010 TIME PLOTTED => 06:17

DIST	COUNTY	ROUTE	POST MILES TOTAL PROJECT	SHEET No	TOTAL SHEETS
12	Ora	22,405, 605	R0.3/R0.9, 22.3/24.0,3.0/R1.6	1671	1929

REGISTERED CIVIL ENGINEER 07-27-09 DATE

2-1-10
PLANS APPROVAL DATE

REGISTERED PROFESSIONAL ENGINEER A. Priley No. C 73375 Exp. 12-31-10 CIVIL STATE OF CALIFORNIA

The State of California or its officers or agents shall not be responsible for the accuracy or completeness of electronic copies of this plan sheet.

OCTA
550 SOUTH MAIN STREET
ORANGE, CA 92863

TRC
21 TECHNOLOGY DR
IRVINE, CA 92618

Note: Abut piles not shown

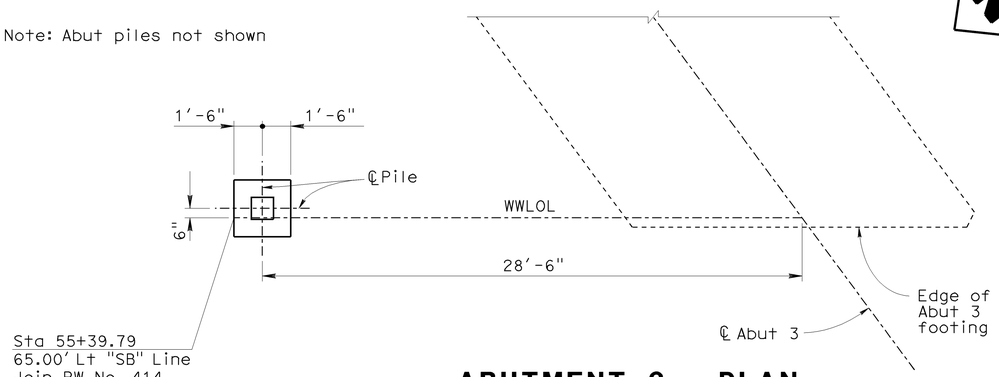

ABUTMENT 3 - PLAN WESTERLY WINGWALL

1/4"= 1'-0"

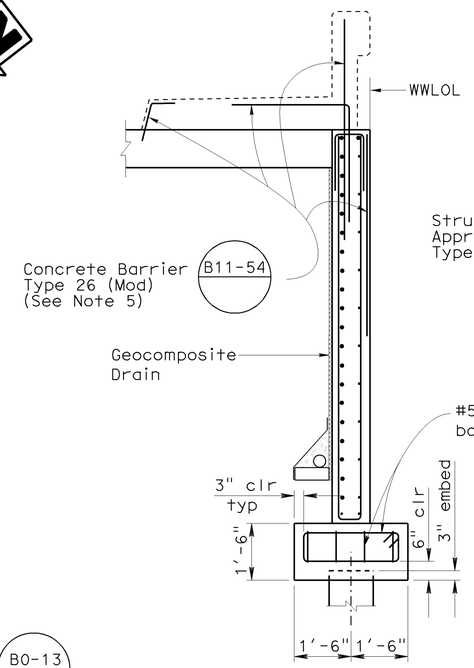

SECTION D-D

1/2"= 1'-0"

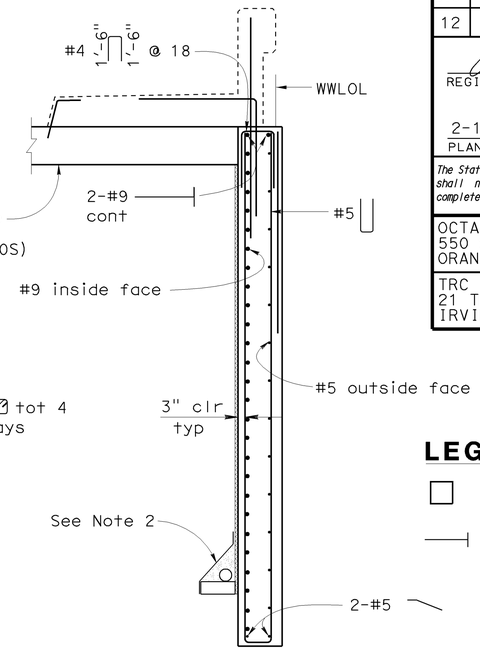

SECTION E-E

1/2"= 1'-0"

LEGEND

Indicates Class 200, Alt "X" Pile

Indicates headed bar reinforcement

Note: Conc barrier not shown

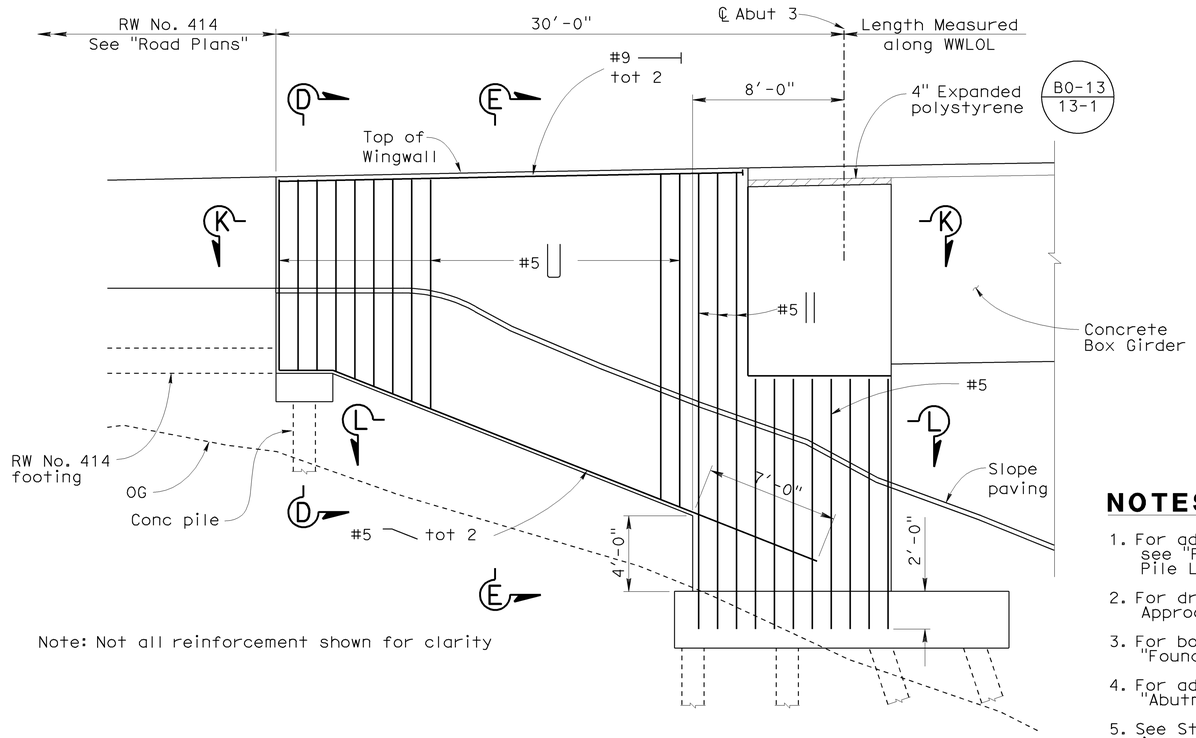

Note: Not all reinforcement shown for clarity

ABUTMENT 3 - ELEVATION WESTERLY WINGWALL

1/4"= 1'-0"

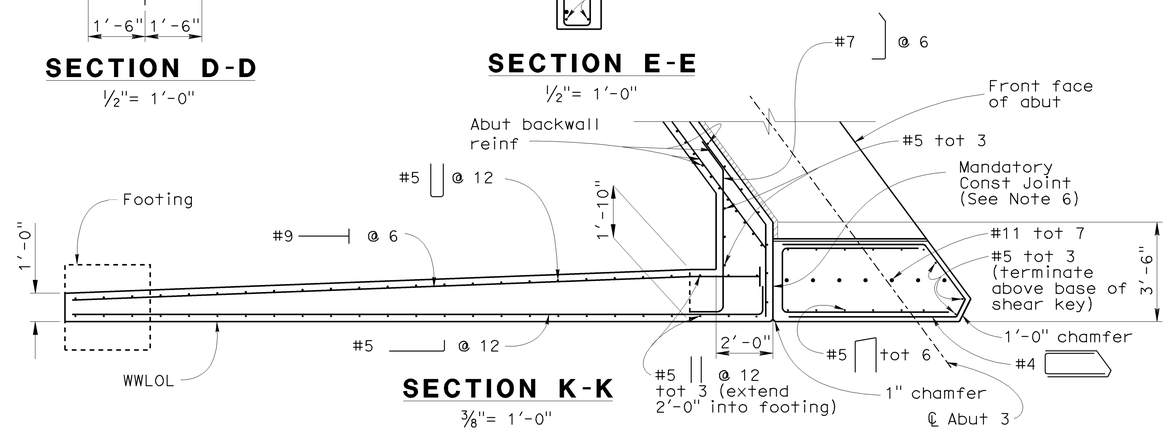

SECTION K-K

3/8"= 1'-0"

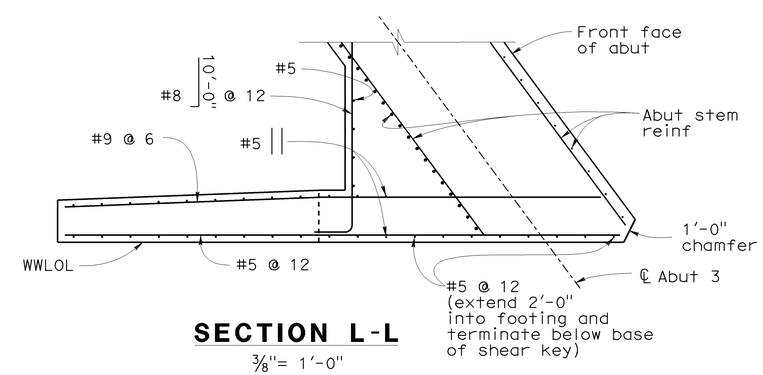

SECTION L-L

3/8"= 1'-0"

NOTES

1. For additional pile and footing information, see "Foundation Plan" and "Abutment Pile Layout" sheets
2. For drainage details, see "Structure Approach Drainage Details" sheet
3. For bottom of footing elevations, see "Foundation Plan" sheet
4. For additional shear key information, see "Abutment Details No. 6" sheet
5. See Standard Plan for barrier and reinf in section on approach slab beyond end of wingwall
6. Mandatory joint surface to be smooth and lined with 15 pound construction paper
7. For fractured rib texture and details, see "Architectural Details No. 1" thru "Architectural Details No. 3" sheets

Sudhakar Vatti
DESIGN OVERSIGHT Sudhakar Vatti
8-10-09
SIGN OFF DATE

	BY	CHECKED
DESIGN	A. Priley	J. Hermstad
DETAILS	K. Michalski	J. Hermstad
QUANTITIES	A. Priley	J. Wong

PREPARED FOR THE STATE OF CALIFORNIA DEPARTMENT OF TRANSPORTATION

A. Priley
PROJECT ENGINEER

BRIDGE NO. 55-1099
POST MILE 22.64

SEAL BEACH BLVD OC (REPLACE)
ABUTMENT DETAILS NO. 4

DESIGN DETAIL SHEET (ENGLISH) (REV. 2/25/05)

ORIGINAL SCALE IN INCHES FOR REDUCED PLANS 0 1 2 3

CU 12235
EA 071631

DISREGARD PRINTS BEARING EARLIER REVISION DATES

REVISION DATES (PRELIMINARY STAGE ONLY) 09/17/08 04/06/09 07/27/09

SHEET 13 OF 45

FILE => 55-1099-f-adt04.dgn

USERNAME => friehard DATE PLOTTED => 04-FEB-2010 TIME PLOTTED => 06:17

DIST	COUNTY	ROUTE	POST MILES TOTAL PROJECT	SHEET No	TOTAL SHEETS
12	Ora	22,405, 605	R0.3/R0.9, 22.3/24.0,3.0/R1.6	1672	1929

REGISTERED CIVIL ENGINEER 07-27-09 DATE

2-1-10
PLANS APPROVAL DATE

The State of California or its officers or agents shall not be responsible for the accuracy or completeness of electronic copies of this plan sheet.

REGISTERED PROFESSIONAL ENGINEER A. Priley No. C 73375 Exp. 12-31-10 CIVIL STATE OF CALIFORNIA

OCTA
550 SOUTH MAIN STREET
ORANGE, CA 92863

TRC
21 TECHNOLOGY DR
IRVINE, CA 92618

NOTES

1. For additional pile and footing information, see "Foundation Plan" and "Abutment Pile Layout" sheets
2. For Section B-B, see "Abutment Details No. 1" sheet
3. For drainage details, see "Structure Approach Drainage Details" sheet
4. Retaining wall shall be in accordance with Std Plan B3-1, except as noted
5. For bottom of footing elevations, see "Foundation Plan" sheet
6. For additional shear key information, see "Abutment Details No. 6" sheet
7. Mandatory joint surface to be smooth and lined with 15 pound construction paper
8. For fractured rib texture and details, see "Architectural Details No. 1" thru "Architectural Details No. 3" sheets

LEGEND

Indicates Class 200, Alt "X" Pile

Indicates Class 200, Alt "X" Pile (Battered 3:1)

Indicates headed bar reinforcement

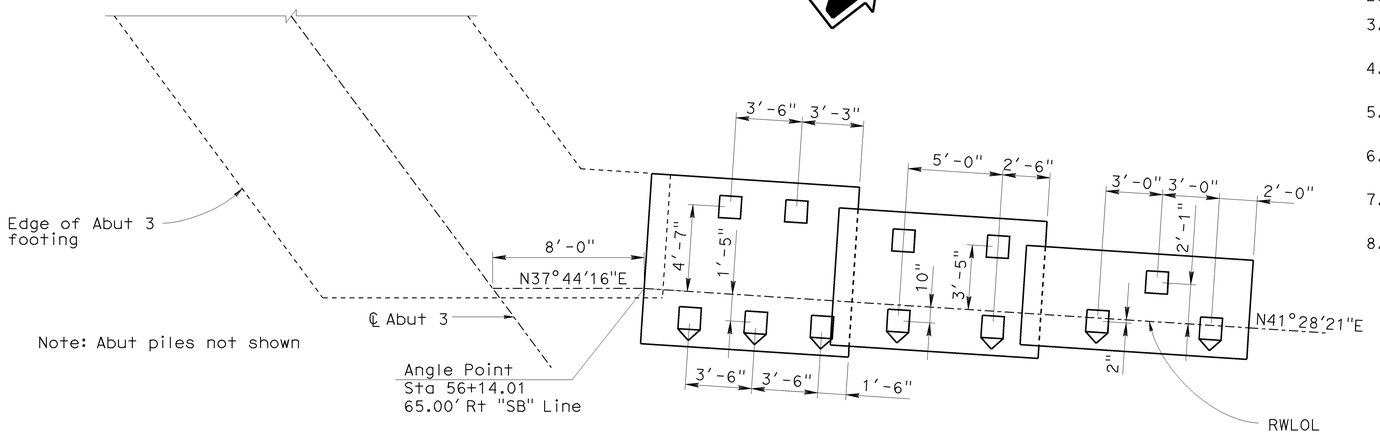

ABUTMENT 3 - PLAN
EASTERLY RETAINING WALL

1/4"= 1'-0"

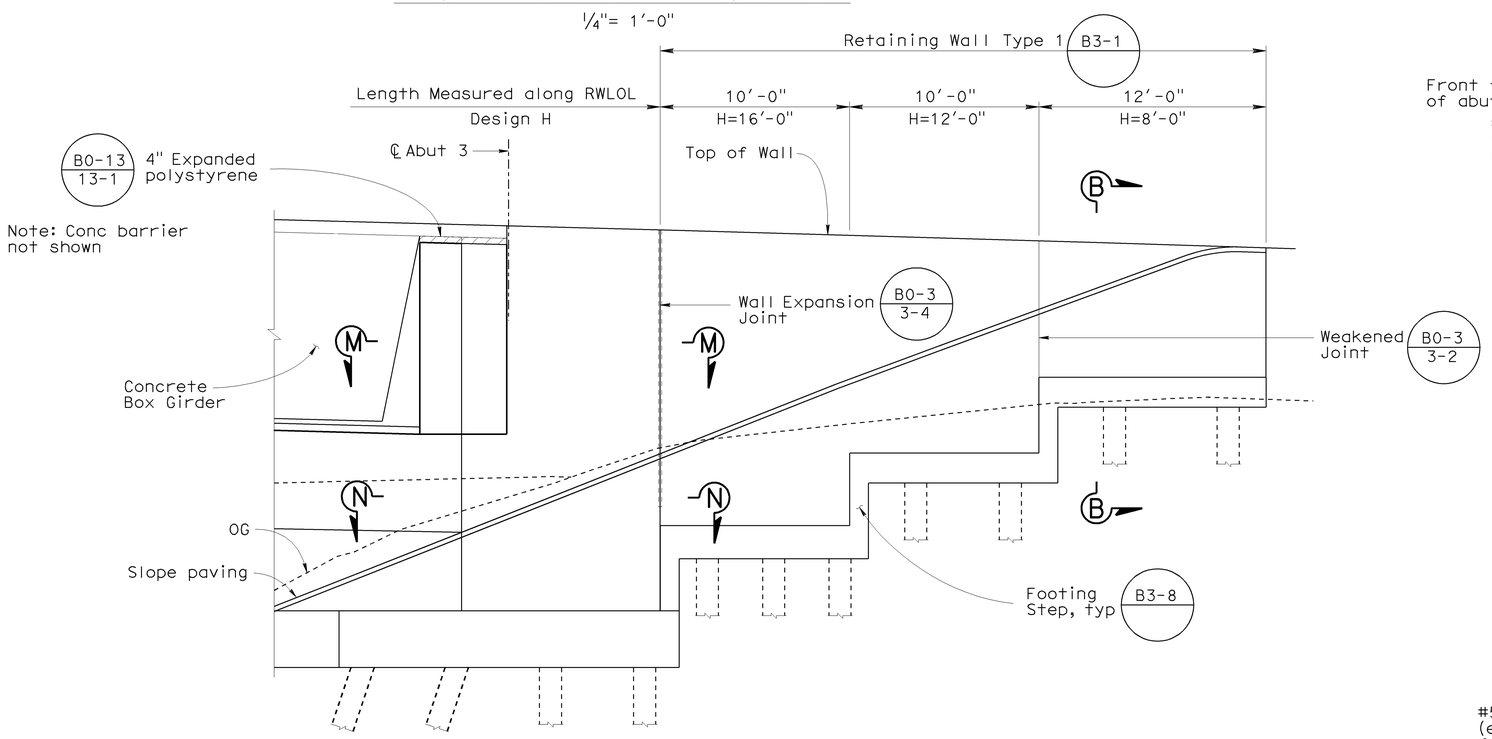

ABUTMENT 3 - ELEVATION
EASTERLY RETAINING WALL

1/4"= 1'-0"

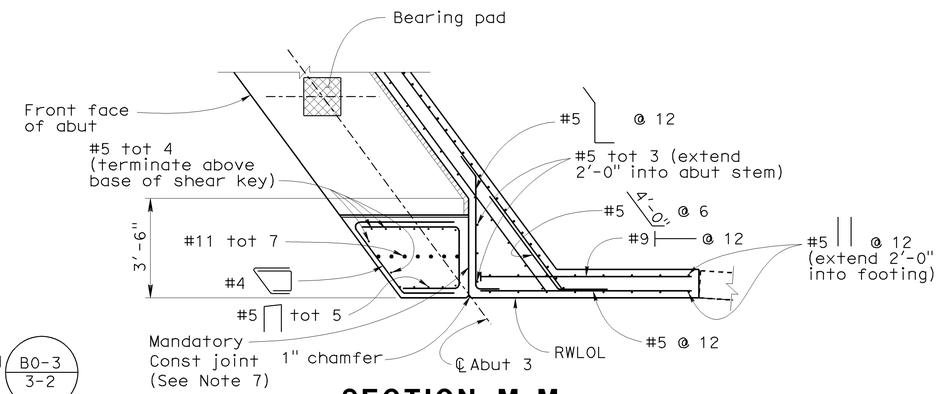

SECTION M-M

3/8"= 1'-0"

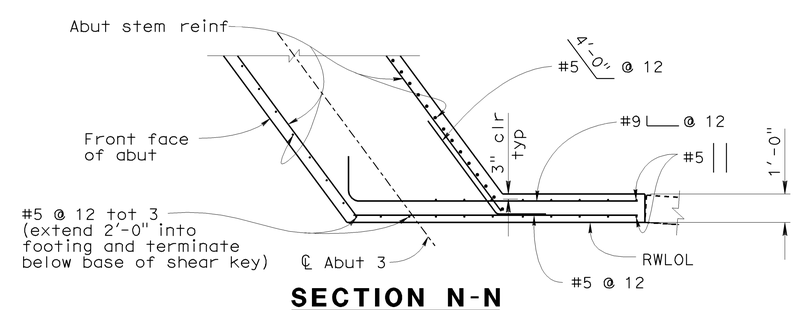

SECTION N-N

3/8"= 1'-0"

Sudhakar Vatti
DESIGN OVERSIGHT Sudhakar Vatti
8-10-09
SIGN OFF DATE

	BY	CHECKED
DESIGN	A. Priley	J. Hermstad
DETAILS	K. Michalski	J. Hermstad
QUANTITIES	A. Priley	J. Wong

PREPARED FOR THE STATE OF CALIFORNIA DEPARTMENT OF TRANSPORTATION

A. Priley
PROJECT ENGINEER

BRIDGE NO. 55-1099
POST MILE 22.64

SEAL BEACH BLVD OC (REPLACE)
ABUTMENT DETAILS NO. 5

DESIGN DETAIL SHEET (ENGLISH) (REV. 2/25/05)

ORIGINAL SCALE IN INCHES FOR REDUCED PLANS 0 1 2 3

CU 12235
EA 071631

DISREGARD PRINTS BEARING EARLIER REVISION DATES

REVISION DATES (PRELIMINARY STAGE ONLY) 09/17/08 04/06/09 07/27/09

SHEET 14 OF 45

FILE => 55-1099-f-adt05.dgn

USERNAME => trienard DATE PLOTTED => 04-FEB-2010 TIME PLOTTED => 06:17

DIST	COUNTY	ROUTE	POST MILES TOTAL PROJECT	SHEET No	TOTAL SHEETS
12	Ora	22,405, 605	R0.3/R0.9, 22.3/24.0,3.0/R1.6	1673	1929

REGISTERED CIVIL ENGINEER 07-27-09 DATE

2-1-10
PLANS APPROVAL DATE

The State of California or its officers or agents shall not be responsible for the accuracy or completeness of electronic copies of this plan sheet.

REGISTERED PROFESSIONAL ENGINEER A. Priley No. C 73375 Exp. 12-31-10 CIVIL STATE OF CALIFORNIA

OCTA
550 SOUTH MAIN STREET
ORANGE, CA 92863

TRC
21 TECHNOLOGY DR
IRVINE, CA 92618

NOTES

1. Terminate typical abutment front face reinforcement at base of shear keys
2. Outer 6" of expanded polystyrene to be removed after construction
3. For placement and number of abutment hanger bars, see Section A-A and Section C-C on "Abutment Details No. 1" sheet
4. Mandatory joint surface to be smooth and lined with 15 pound construction paper
5. Main Vertical shear key reinforcement shall be centered transversely in the shear key, and shall be galvanized
6. For Detail 2, see "Abutment Details No. 7" sheet
7. For exterior shear key sections, see "Abutment Details No. 2" through "Abutment Details No. 5" sheets

LEGEND

Indicates bundled bars

Indicates headed bar reinforcement

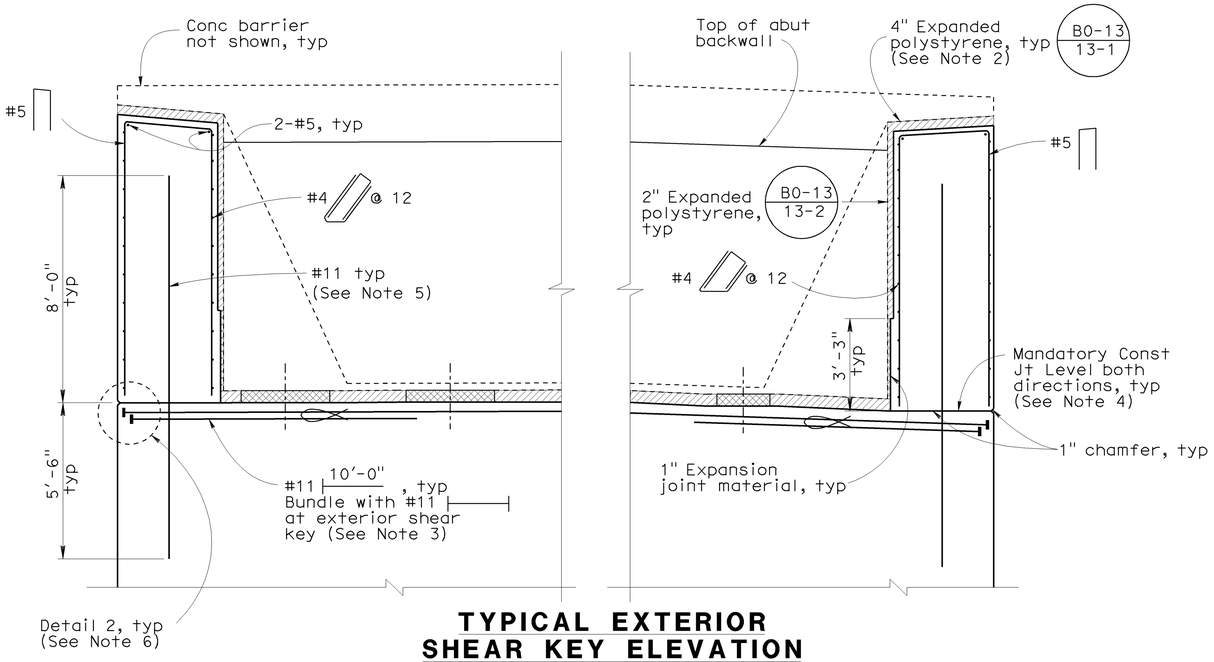

TYPICAL EXTERIOR SHEAR KEY ELEVATION

3/8"= 1'-0"

(Abutment 1 shown, Abutment 3 similar)

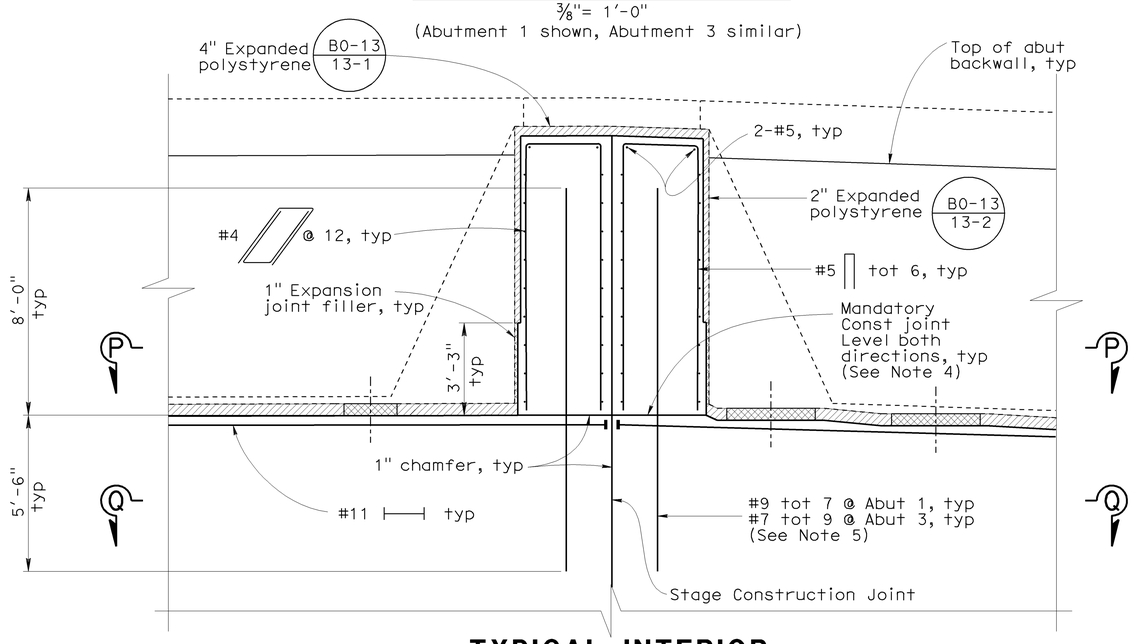

TYPICAL INTERIOR SHEAR KEY ELEVATION

3/8"= 1'-0"

(Abutment 1 shown, Abutment 3 similar)

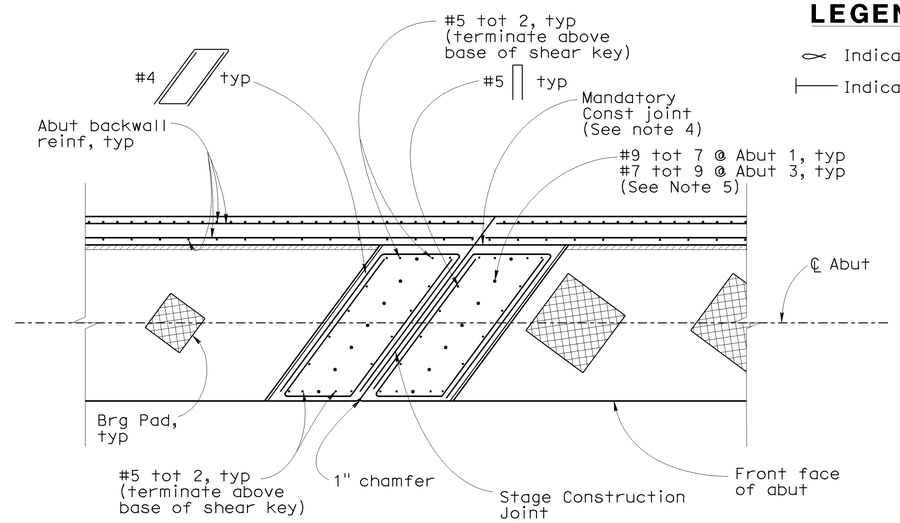

SECTION P-P

3/8"= 1'-0"

(Abutment 1 shown, Abutment 3 similar)

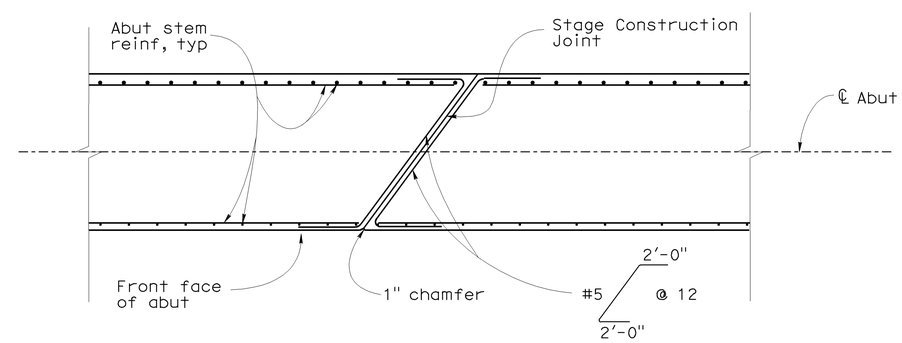

SECTION Q-Q

3/8"= 1'-0"

(Abutment 1 shown, Abutment 3 similar)

Sudhakar Vatti
DESIGN OVERSIGHT Sudhakar Vatti
8-10-09
SIGN OFF DATE

DESIGN DETAIL SHEET (ENGLISH) (REV. 2/25/05)

	BY	CHECKED
DESIGN	A. Priley	J. Hermstad
DETAILS	K. Michalski	J. Hermstad
QUANTITIES	A. Priley	J. Wong

ORIGINAL SCALE IN INCHES FOR REDUCED PLANS 0 1 2 3

PREPARED FOR THE STATE OF CALIFORNIA DEPARTMENT OF TRANSPORTATION

A. Priley
PROJECT ENGINEER

CU 12235
EA 071631

BRIDGE NO. 55-1099
POST MILE 22.64

SEAL BEACH BLVD OC (REPLACE)

ABUTMENT DETAILS NO. 6

DISREGARD PRINTS BEARING EARLIER REVISION DATES

REVISION DATES (PRELIMINARY STAGE ONLY) 09/17/08 04/06/09 07/27/09

SHEET 15 OF 45

FILE => 55-1099-f-adt06.dgn

USERNAME => trrenard DATE PLOTTED => 04-FEB-2010 TIME PLOTTED => 06:17

DIST	COUNTY	ROUTE	POST MILES TOTAL PROJECT	SHEET No	TOTAL SHEETS
12	Ora	22,405, 605	R0.3/R0.9, 22.3/24.0,3.0/R1.6	1674	1929

REGISTERED CIVIL ENGINEER 07-27-09 DATE

2-1-10
PLANS APPROVAL DATE

REGISTERED PROFESSIONAL ENGINEER A. Priley No. C 73375 Exp. 12-31-10 CIVIL STATE OF CALIFORNIA

The State of California or its officers or agents shall not be responsible for the accuracy or completeness of electronic copies of this plan sheet.

OCTA
550 SOUTH MAIN STREET
ORANGE, CA 92863

TRC
21 TECHNOLOGY DR
IRVINE, CA 92618

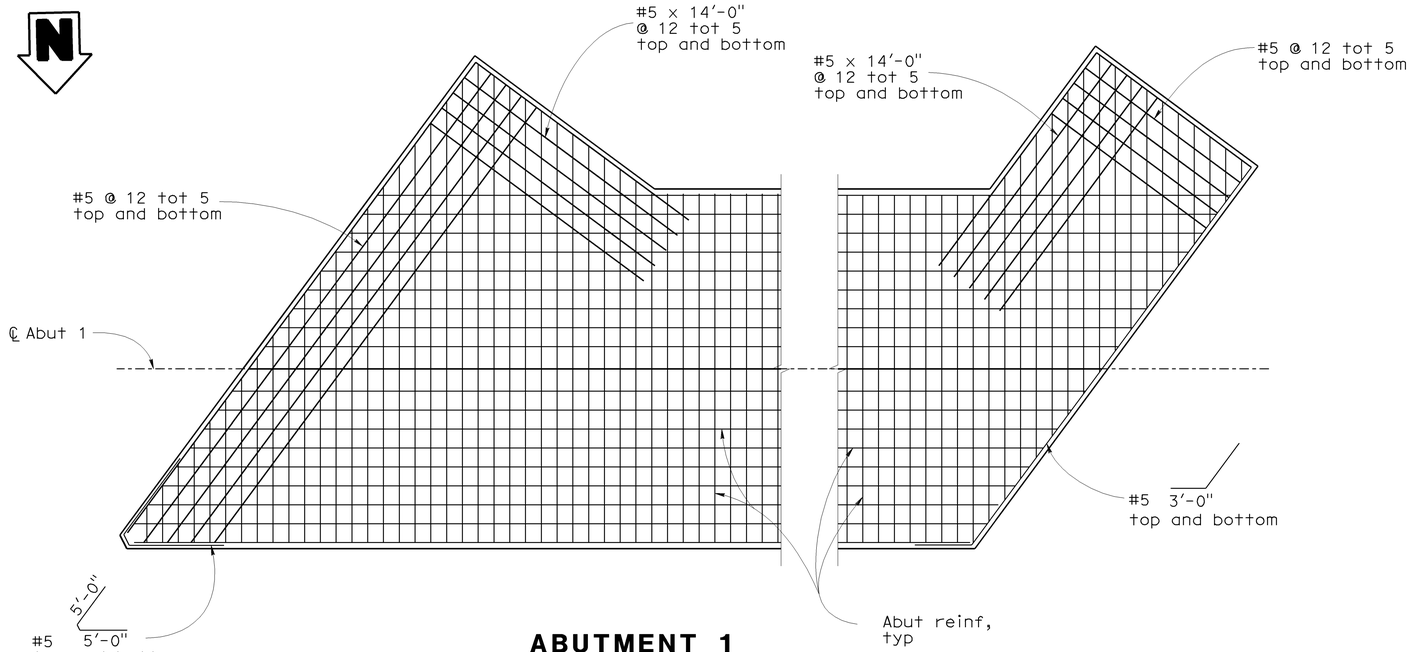

ABUTMENT 1 CORNER REINFORCEMENT

1/4"=1'-0"

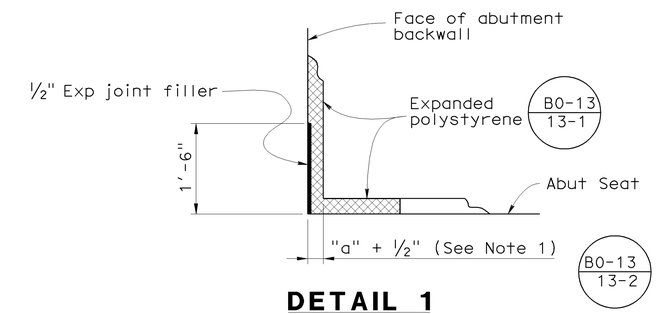

DETAIL 1

No Scale

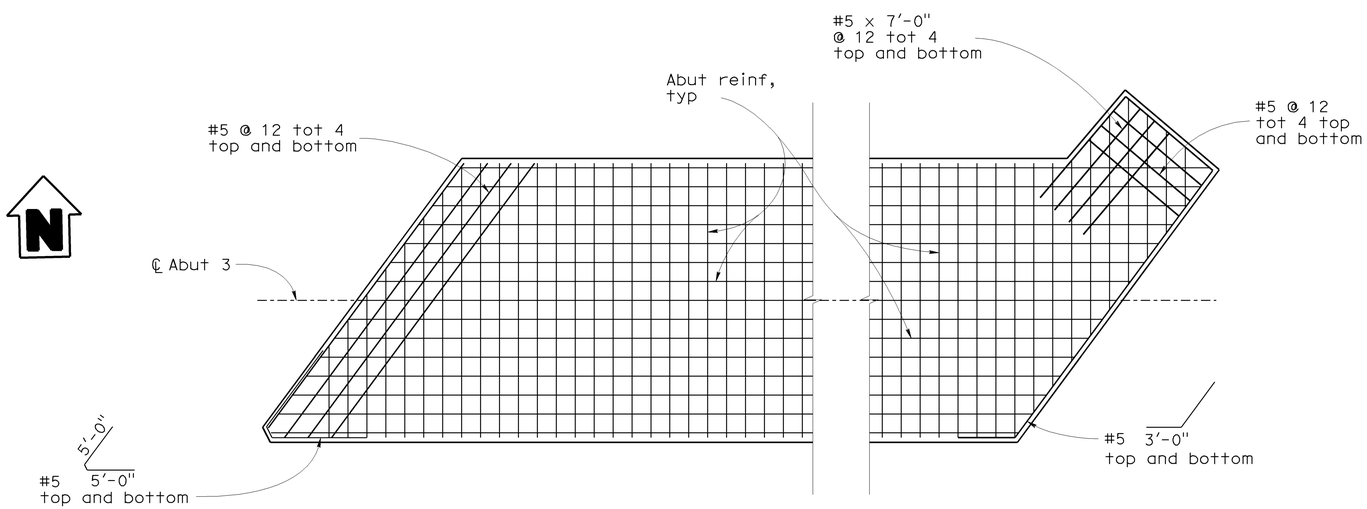

ABUTMENT 3 CORNER REINFORCEMENT

1/4"=1'-0"

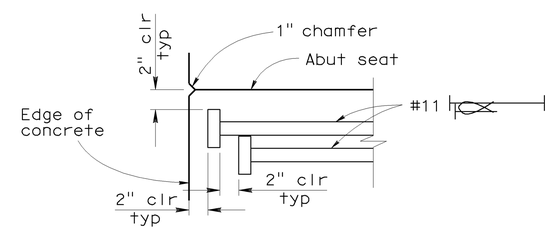

DETAIL 2

No Scale

LEGEND

Indicates bundled bars

Indicates headed bar reinforcement

NOTES

1. For "a" dimension at abutment backwall, see "Joint Seal Assembly" sheet

Sudhakar Vatti
DESIGN OVERSIGHT Sudhakar Vatti
8-10-09
SIGN OFF DATE

	BY	CHECKED
DESIGN	A. Priley	J. Hermstad
DETAILS	K. Michalski	J. Hermstad
QUANTITIES	A. Priley	J. Wong

PREPARED FOR THE STATE OF CALIFORNIA DEPARTMENT OF TRANSPORTATION

A. Priley
PROJECT ENGINEER

BRIDGE NO. 55-1099
POST MILE 22.64

SEAL BEACH BLVD OC (REPLACE)
ABUTMENT DETAILS NO. 7

DESIGN DETAIL SHEET (ENGLISH) (REV. 2/25/05)

ORIGINAL SCALE IN INCHES FOR REDUCED PLANS 0 1 2 3

CU 12235
EA 071631

DISREGARD PRINTS BEARING EARLIER REVISION DATES

REVISION DATES (PRELIMINARY STAGE ONLY) 09/17/08 04/06/09 07/27/09

SHEET 16 OF 45

FILE => 55-1099-f-adt07.dgn

USERNAME => trienard DATE PLOTTED => 04-FEB-2010 TIME PLOTTED => 06:17

DIST	COUNTY	ROUTE	POST MILES TOTAL PROJECT	SHEET No	TOTAL SHEETS
12	Ora	22,405, 605	R0.3/R0.9, 22.3/24.0,3.0/R1.6	1675	1929

REGISTERED CIVIL ENGINEER 07-27-09 DATE

2-1-10
PLANS APPROVAL DATE

REGISTERED PROFESSIONAL ENGINEER A. Priley No. C 73375 Exp. 12-31-10 CIVIL STATE OF CALIFORNIA

The State of California or its officers or agents shall not be responsible for the accuracy or completeness of electronic copies of this plan sheet.

OCTA
550 SOUTH MAIN STREET
ORANGE, CA 92863

TRC
21 TECHNOLOGY DR
IRVINE, CA 92618

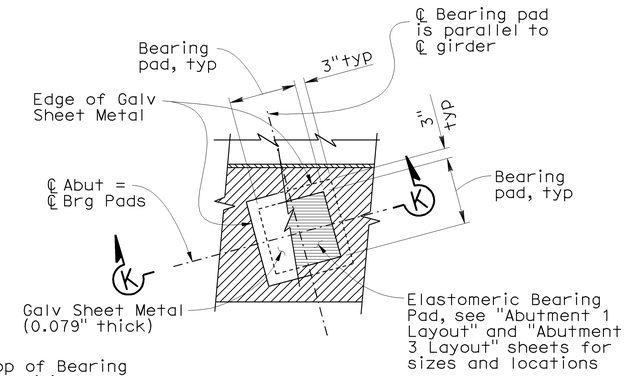

NOTE:
Coat top of Bearing Pad with silicone grease prior to placing sheet metal

PLAN

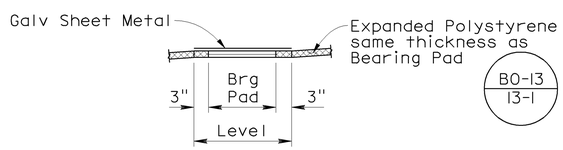

SECTION K-K

TYPICAL BEARING PAD DETAIL

No Scale

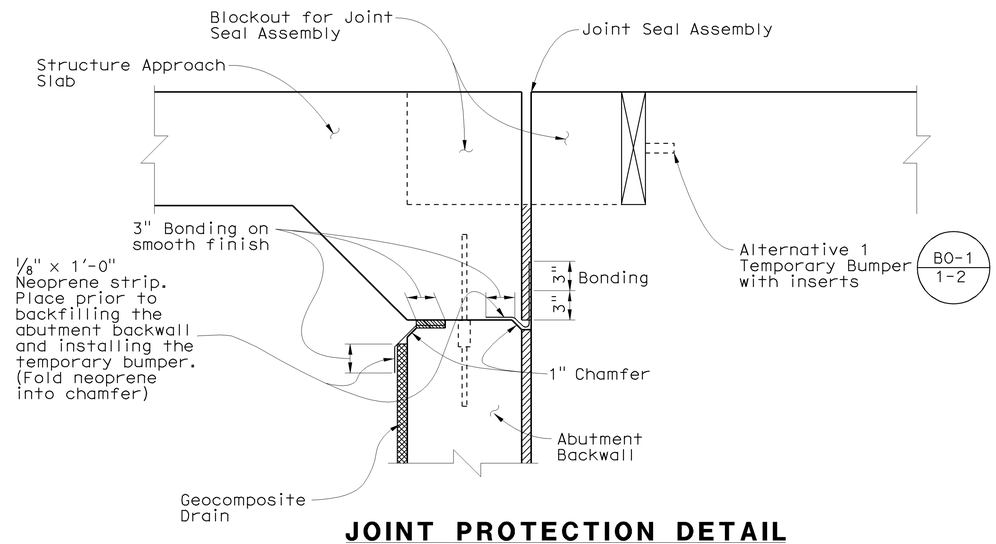

JOINT PROTECTION DETAIL

No Scale

Sudhakar Vatti
DESIGN OVERSIGHT Sudhakar Vatti
8-10-09
SIGN OFF DATE

	BY	CHECKED
DESIGN	A. Priley	J. Hermstad
DETAILS	K. Michalski	J. Hermstad
QUANTITIES	A. Priley	J. Wong

PREPARED FOR THE STATE OF CALIFORNIA DEPARTMENT OF TRANSPORTATION

A. Priley
PROJECT ENGINEER

BRIDGE NO. 55-1099
POST MILE 22.64

SEAL BEACH BLVD OC (REPLACE)
ABUTMENT DETAILS NO. 8

DESIGN DETAIL SHEET (ENGLISH) (REV. 2/25/05)

ORIGINAL SCALE IN INCHES FOR REDUCED PLANS 0 1 2 3

CU 12235
EA 071631

DISREGARD PRINTS BEARING EARLIER REVISION DATES

REVISION DATES (PRELIMINARY STAGE ONLY) 09/17/08 04/06/09 07/27/09

SHEET 17 OF 45

FILE => 55-1099-f-adt08.dgn

USERNAME => friehard DATE PLOTTED => 04-FEB-2010 TIME PLOTTED => 06:17

DIST	COUNTY	ROUTE	POST MILES TOTAL PROJECT	SHEET No	TOTAL SHEETS
12	Ora	22,405, 605	R0.3/R0.9, 22.3/24.0,3.0/R1.6	1676	1929

REGISTERED CIVIL ENGINEER 07-27-09 DATE

2-1-10
PLANS APPROVAL DATE

REGISTERED PROFESSIONAL ENGINEER A. Priley No. C 73375 Exp. 12-31-10 CIVIL STATE OF CALIFORNIA

The State of California or its officers or agents shall not be responsible for the accuracy or completeness of electronic copies of this plan sheet.

OCTA
550 SOUTH MAIN STREET
ORANGE, CA 92863

TRC
21 TECHNOLOGY DR
IRVINE, CA 92618

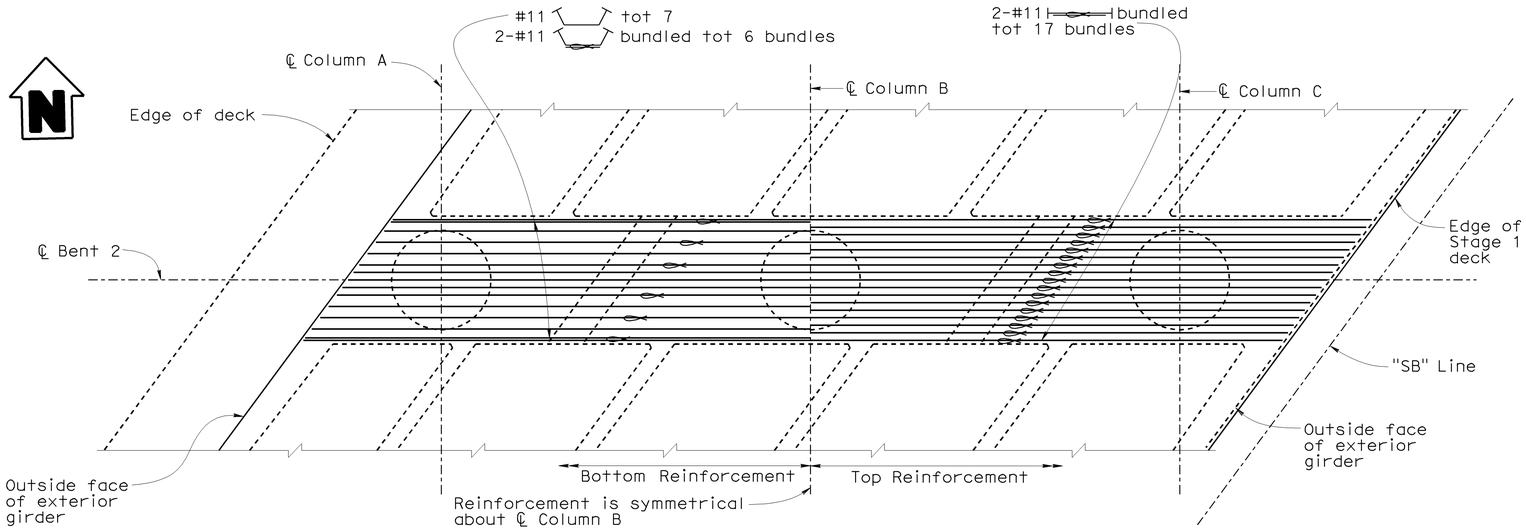

PLAN

3/16"= 1'-0"

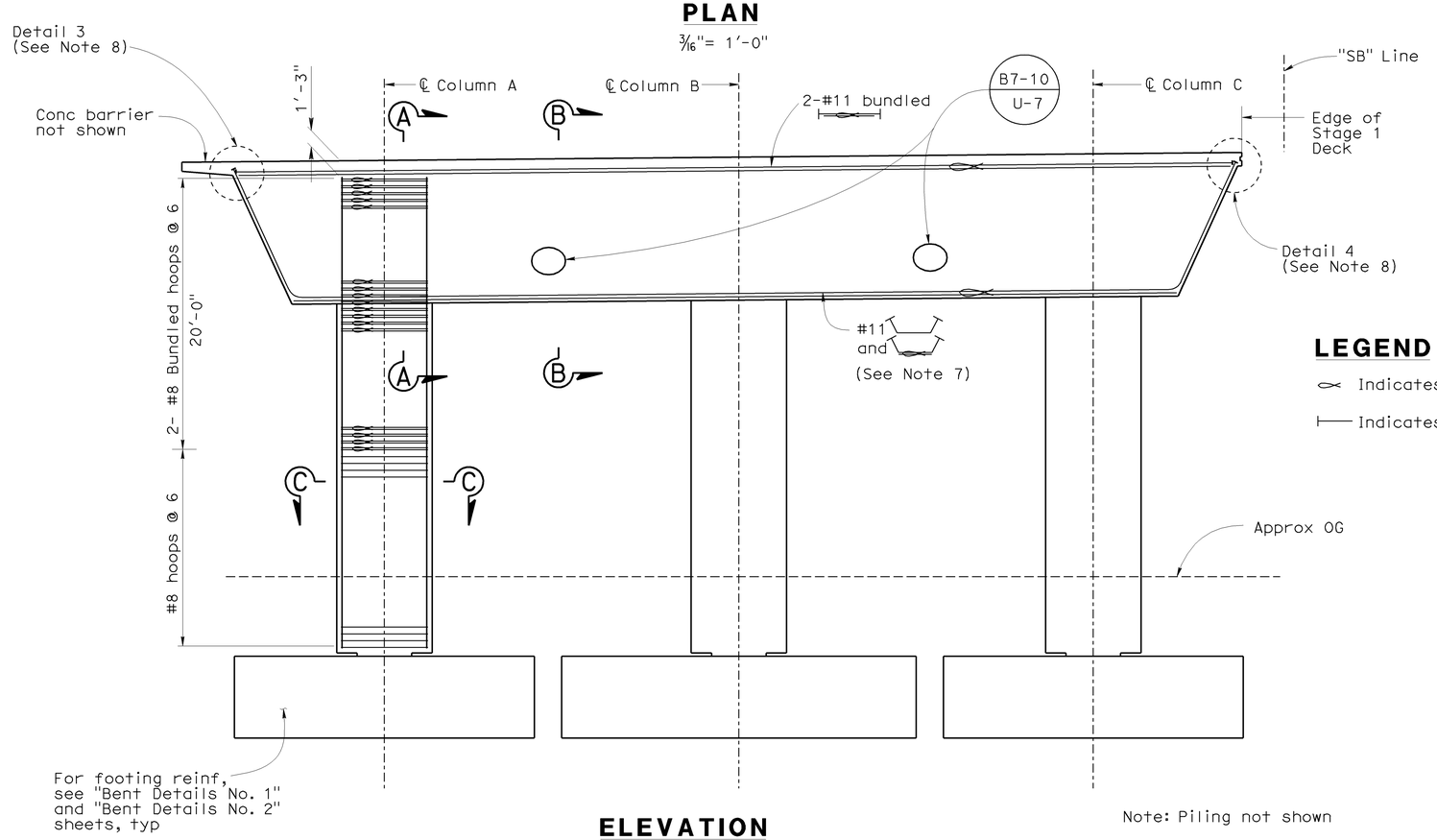

ELEVATION

3/16"= 1'-0"

Note: Piling not shown

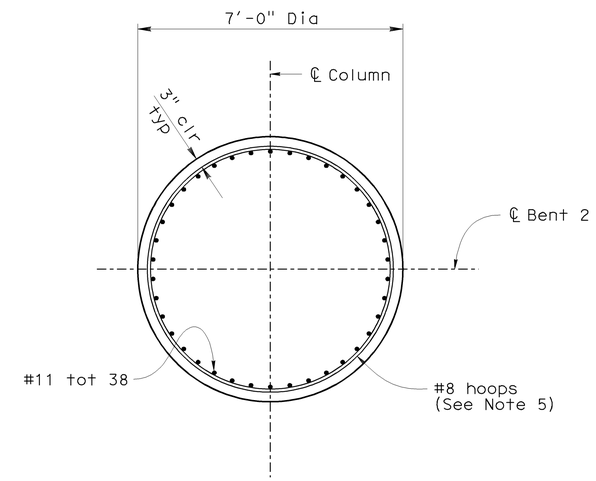

SECTION C-C

1/2"= 1'-0"

LEGEND

Indicates bundled bars

Indicates headed bar reinforcement

NOTES

1. For Sections A-A and B-B, see "Bent Details No. 4" sheet
2. For utility openings and sizes, see "Typical Section - Stage 1" sheet
3. For bent cap stirrups see "Bent Details No. 5" sheet
4. Lap splicing of main cap reinforcement bars is not allowed. Splicing shall meet "Service Splice" requirements, and shall be staggered and centered between columns
5. All hoops shall be butt welded continuous and meet "Ultimate Splice" requirements
6. No splice permitted in vertical column reinforcement
7. For bent cap and column reinforcement placement, see Section H-H on "Bent Details No. 4" sheet
8. For Detail 3 and Detail 4, see "Bent 2 Layout - Stage 2" sheet

Sudhakar Vatti
DESIGN OVERSIGHT Sudhakar Vatti
8-10-09
SIGN OFF DATE

	BY	CHECKED
DESIGN	A. Priley	J. Hermstad
DETAILS	K. Michalski	J. Hermstad
QUANTITIES	A. Priley	J. Wong

PREPARED FOR THE STATE OF CALIFORNIA DEPARTMENT OF TRANSPORTATION

A. Priley
PROJECT ENGINEER

CU 12235
EA 071631

BRIDGE NO. 55-1099
POST MILE 22.64

SEAL BEACH BLVD OC (REPLACE)
BENT 2 LAYOUT - STAGE 1

DISREGARD PRINTS BEARING EARLIER REVISION DATES 09/17/08 04/06/09 07/27/09

SHEET 18 OF 45

DESIGN DETAIL SHEET (ENGLISH) (REV. 2/25/05)

ORIGINAL SCALE IN INCHES FOR REDUCED PLANS 0 1 2 3

FILE => 55-1099-h-b01.dgn

USERNAME => rtrenord DATE PLOTTED => 04-FEB-2010 TIME PLOTTED => 06:17

DIST	COUNTY	ROUTE	POST MILES TOTAL PROJECT	SHEET No	TOTAL SHEETS
12	Ora	22,405, 605	R0.3/R0.9, 22.3/24.0,3.0/R1.6	1677	1929

REGISTERED CIVIL ENGINEER 07-27-09 DATE

2-1-10
PLANS APPROVAL DATE

REGISTERED PROFESSIONAL ENGINEER A. Priley No. C 73375 Exp. 12-31-10 CIVIL STATE OF CALIFORNIA

The State of California or its officers or agents shall not be responsible for the accuracy or completeness of electronic copies of this plan sheet.

OCTA
550 SOUTH MAIN STREET
ORANGE, CA 92863

TRC
21 TECHNOLOGY DR
IRVINE, CA 92618

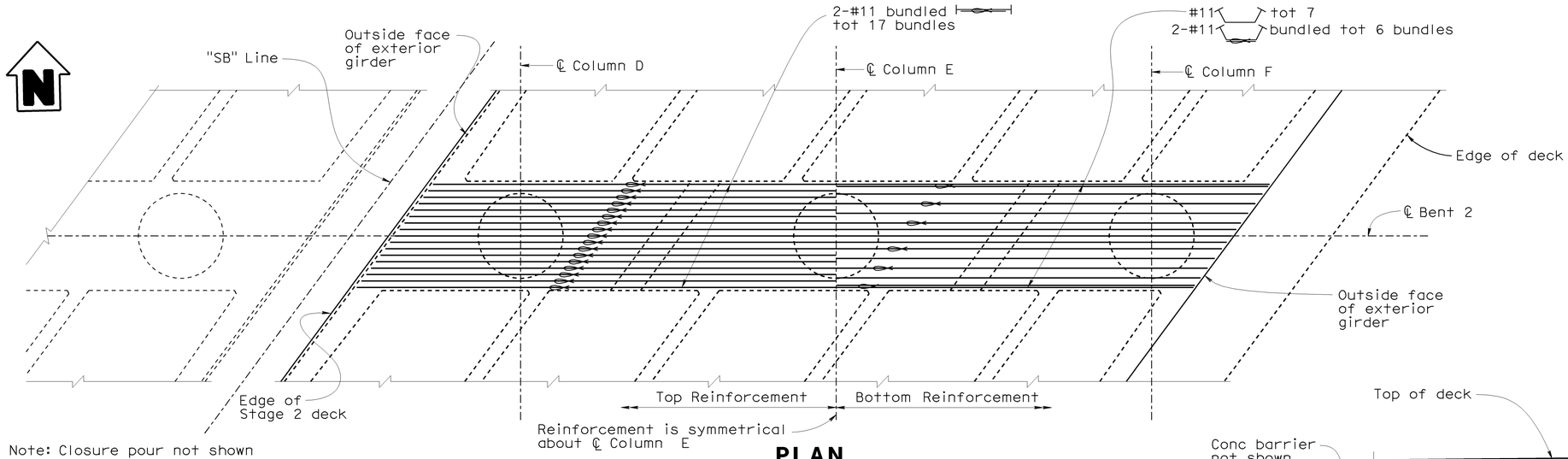

Note: Closure pour not shown

PLAN

3/16"= 1'-0"

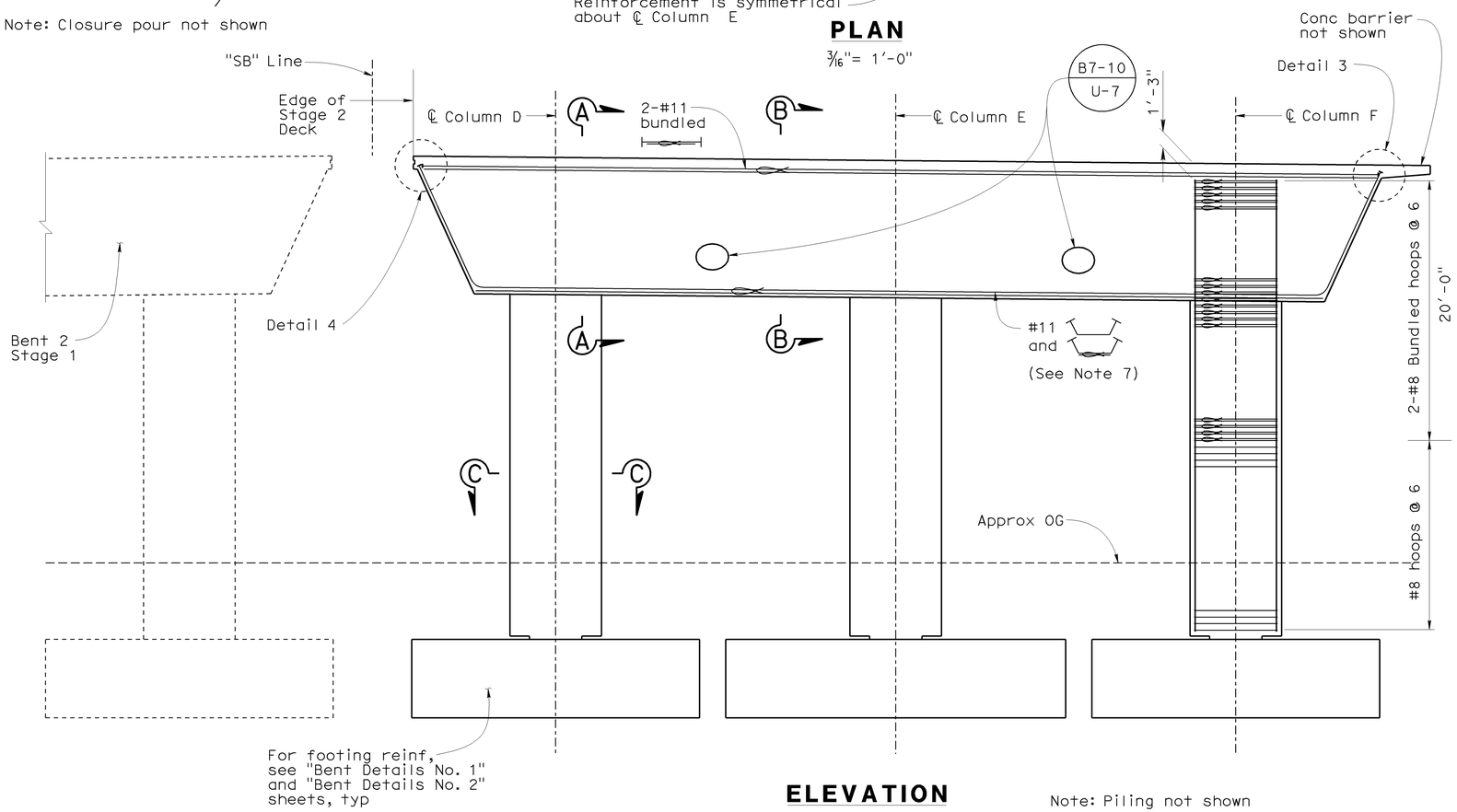

ELEVATION

3/16"= 1'-0"

Note: Piling not shown

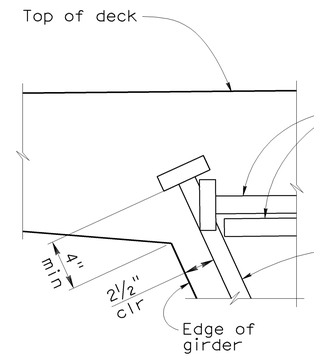

DETAIL 3

No Scale

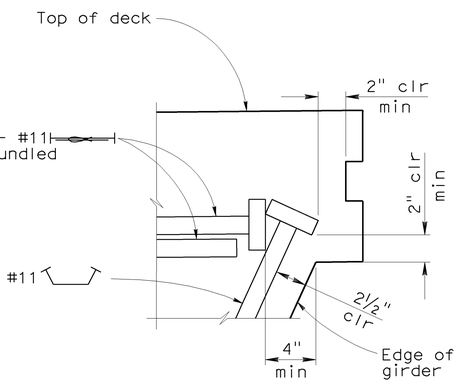

DETAIL 4

No Scale

LEGEND

Indicates bundled bars

Indicates headed bar reinforcement

NOTES

1. For Sections A-A and B-B, see "Bent Details No. 4" sheet
2. For Section C-C, see "Bent 2 Layout - Stage 1" sheet
3. For utility openings and sizes, see "Typical Section - Stage 2" sheet
4. For bent cap stirrups see "Bent Details No. 5" sheet
5. Lap splicing of main cap reinforcement bars is not allowed. Splicing shall meet "Service Splice" requirements, and shall be staggered and centered between columns
6. No splice permitted in vertical column reinforcement
7. For bent cap and column reinforcement placement, see Section H-H on "Bent Details No. 4" sheet

Sudhakar Vatti
DESIGN OVERSIGHT Sudhakar Vatti
8-10-09
SIGN OFF DATE

	BY	CHECKED
DESIGN	A. Priley	J. Hermstad
DETAILS	K. Michalski	J. Hermstad
QUANTITIES	A. Priley	J. Wong

PREPARED FOR THE STATE OF CALIFORNIA DEPARTMENT OF TRANSPORTATION

A. Priley
PROJECT ENGINEER

BRIDGE NO. 55-1099
POST MILE 22.64

SEAL BEACH BLVD OC (REPLACE)
BENT 2 LAYOUT - STAGE 2

DESIGN DETAIL SHEET (ENGLISH) (REV. 2/25/05)

ORIGINAL SCALE IN INCHES FOR REDUCED PLANS 0 1 2 3

CU 12235
EA 071631

DISREGARD PRINTS BEARING EARLIER REVISION DATES

REVISION DATES (PRELIMINARY STAGE ONLY) 09/17/08 04/06/09 07/27/09

SHEET 19 OF 45

FILE => 55-1099-h-b02.dgn

USERNAME => trlenard DATE PLOTTED => 04-FEB-2010 TIME PLOTTED => 06:17

DIST	COUNTY	ROUTE	POST MILES TOTAL PROJECT	SHEET No	TOTAL SHEETS
12	Ora	22,405, 605	R0.3/R0.9, 22.3/24.0,3.0/R1.6	1678	1929

REGISTERED CIVIL ENGINEER 07-27-09 DATE

2-1-10
PLANS APPROVAL DATE

REGISTERED PROFESSIONAL ENGINEER A. Priley No. C 73375 Exp. 12-31-10 CIVIL STATE OF CALIFORNIA

The State of California or its officers or agents shall not be responsible for the accuracy or completeness of electronic copies of this plan sheet.

OCTA
550 SOUTH MAIN STREET
ORANGE, CA 92863

TRC
21 TECHNOLOGY DR
IRVINE, CA 92618

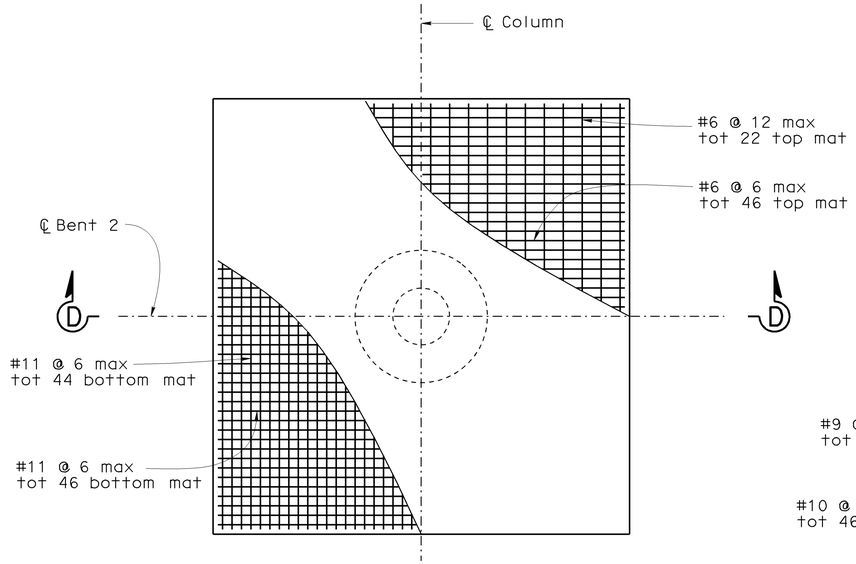

FOOTING REINFORCEMENT PLAN
COLUMNS A, C, D & F

1/4"= 1'-0"

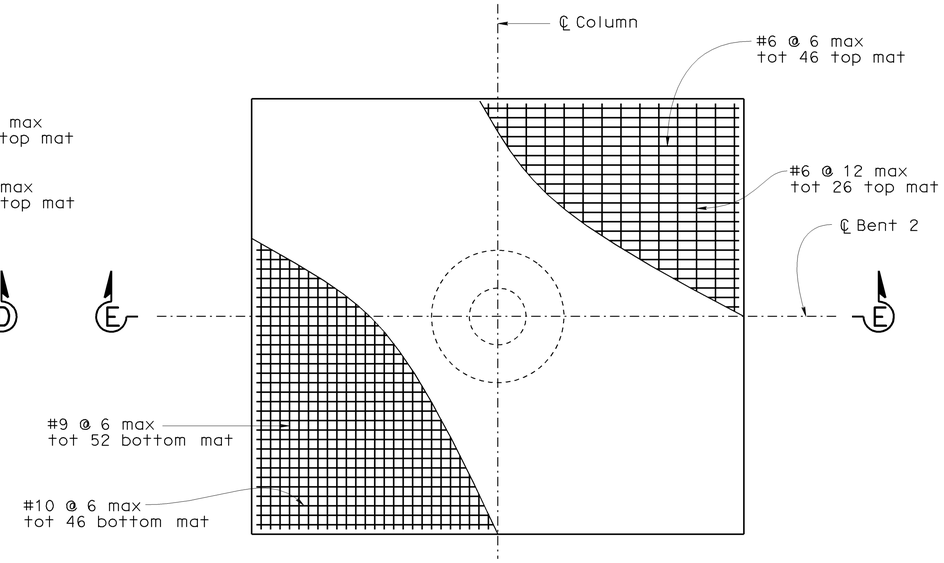

FOOTING REINFORCEMENT PLAN
COLUMNS B & E

1/4"= 1'-0"

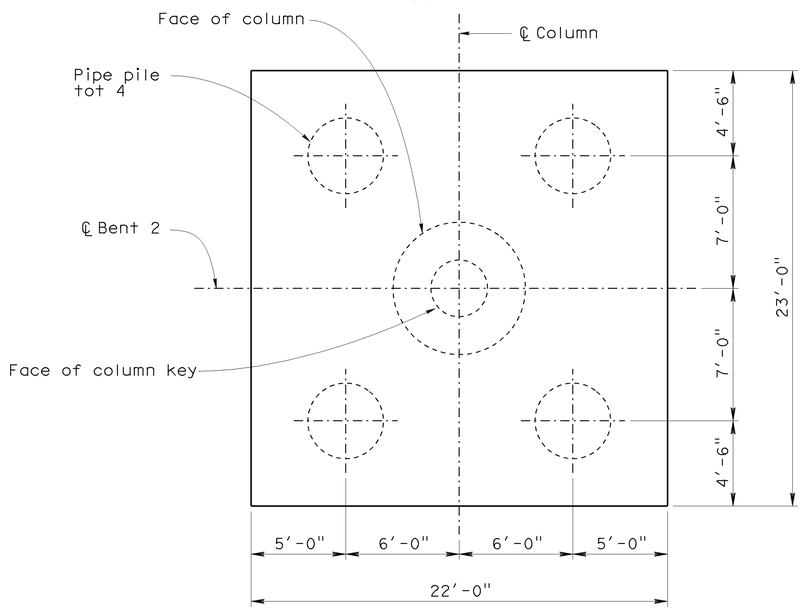

PILE LAYOUT - COLUMNS A, C, D & F

1/4"= 1'-0"

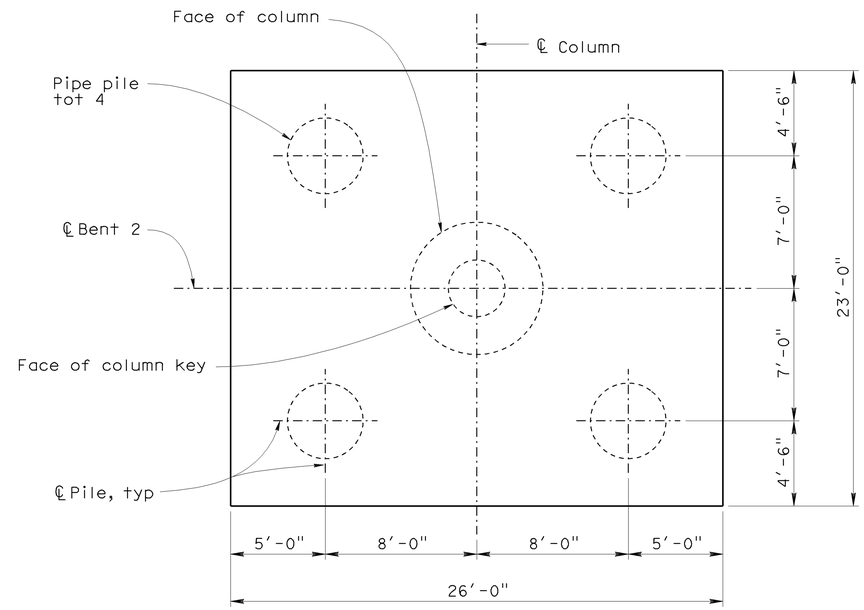

PILE LAYOUT - COLUMNS B & E

1/4"= 1'-0"

NOTES

1. For Sections D-D and E-E see "Bent Details No. 2" sheet
2. For locations of Columns A-F, see "Bent 2 - Stage 1" and "Bent 2 - Stage 2" sheets
3. For pipe pile see "Bent Details No. 3" sheet

Sudhakar Vatti
DESIGN OVERSIGHT Sudhakar Vatti
8-10-09
SIGN OFF DATE

	BY	CHECKED
DESIGN	A. Priley	J. Hermstad
DETAILS	K. Michalski	J. Hermstad
QUANTITIES	A. Priley	J. Wong

PREPARED FOR THE STATE OF CALIFORNIA DEPARTMENT OF TRANSPORTATION

A. Priley
PROJECT ENGINEER

BRIDGE NO. 55-1099
POST MILE 22.64

SEAL BEACH BLVD OC (REPLACE)
BENT DETAILS NO. 1

DESIGN DETAIL SHEET (ENGLISH) (REV. 2/25/05)

ORIGINAL SCALE IN INCHES FOR REDUCED PLANS 0 1 2 3

CU 12235
EA 071631

DISREGARD PRINTS BEARING EARLIER REVISION DATES

REVISION DATES (PRELIMINARY STAGE ONLY) 09/17/08 04/06/09 01/27/09

SHEET 20 OF 45

FILE => 55-1099-h-bdt01.dgn

USERNAME => trienard DATE PLOTTED => 04-FEB-2010 TIME PLOTTED => 06:17

DIST	COUNTY	ROUTE	POST MILES TOTAL PROJECT	SHEET No	TOTAL SHEETS
12	Ora	22,405, 605	R0.3/R0.9, 22.3/24.0,3.0/R1.6	1679	1929

REGISTERED CIVIL ENGINEER 07-27-09 DATE

2-1-10
PLANS APPROVAL DATE

REGISTERED PROFESSIONAL ENGINEER A. Priley No. C 73375 Exp. 12-31-10 CIVIL STATE OF CALIFORNIA

The State of California or its officers or agents shall not be responsible for the accuracy or completeness of electronic copies of this plan sheet.

OCTA
550 SOUTH MAIN STREET
ORANGE, CA 92863

TRC
21 TECHNOLOGY DR
IRVINE, CA 92618

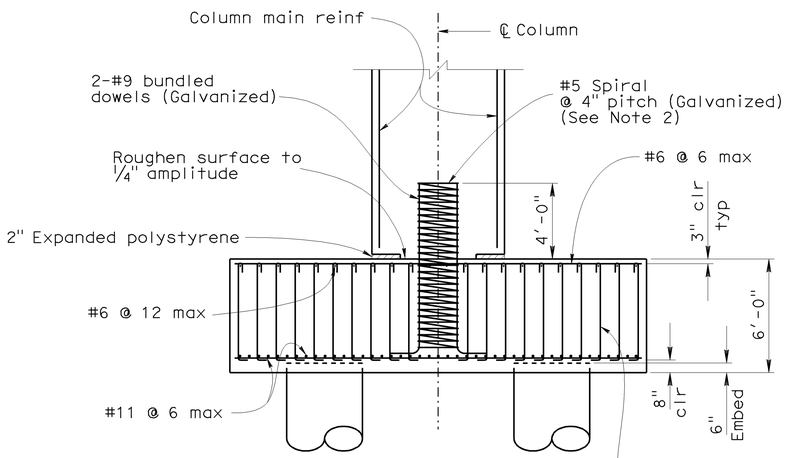

SECTION D-D

1/4"= 1'-0"

Note: Column hoops not shown for clarity

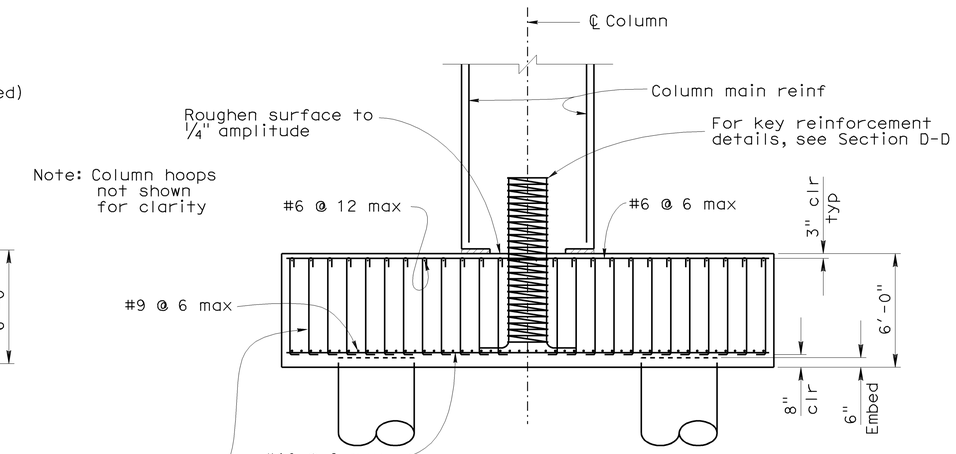

SECTION E-E

1/4"= 1'-0"

#5 @ 6 max longitudinal and 12 max transverse hook around top and bottom mats

NOTES

1. For locations of Sections D-D and E-E, see "Bent Details No. 1" sheet
2. Spiral may be discontinuous at top of footing reinforcement

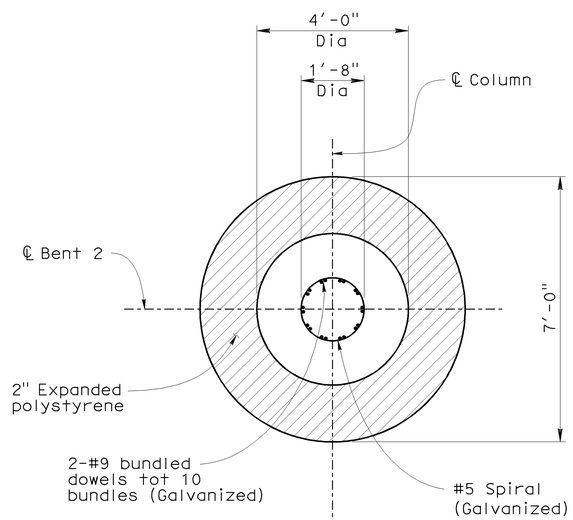

KEY PLAN

1/2"= 1'-0"

Sudhakar Vatti
DESIGN OVERSIGHT Sudhakar Vatti
8-10-09
SIGN OFF DATE

	BY	CHECKED
DESIGN	A. Priley	J. Hermstad
DETAILS	K. Michalski	J. Hermstad
QUANTITIES	A. Priley	J. Wong

PREPARED FOR THE STATE OF CALIFORNIA DEPARTMENT OF TRANSPORTATION

A. Priley
PROJECT ENGINEER

BRIDGE NO. 55-1099
POST MILE 22.64

SEAL BEACH BLVD OC (REPLACE)
BENT DETAILS NO. 2

DESIGN DETAIL SHEET (ENGLISH) (REV. 2/25/05)

ORIGINAL SCALE IN INCHES FOR REDUCED PLANS 0 1 2 3

CU 12235
EA 071631

DISREGARD PRINTS BEARING EARLIER REVISION DATES

REVISION DATES (PRELIMINARY STAGE ONLY) 09/17/08 04/06/09 07/27/09

SHEET 21 OF 45

FILE => 55-1099-h-bdt02.dgn

USERNAME => rriehard DATE PLOTTED => 04-FEB-2010 TIME PLOTTED => 06:17

DIST	COUNTY	ROUTE	POST MILES TOTAL PROJECT	SHEET No	TOTAL SHEETS
12	Ora	22,405, 605	R0.3/R0.9, 22.3/24.0,3.0/R1.6	1680	1929

REGISTERED CIVIL ENGINEER 07-27-09 DATE

2-1-10
PLANS APPROVAL DATE

REGISTERED PROFESSIONAL ENGINEER A. Priley No. C 73375 Exp. 12-31-10 CIVIL STATE OF CALIFORNIA

The State of California or its officers or agents shall not be responsible for the accuracy or completeness of electronic copies of this plan sheet.

OCTA
550 SOUTH MAIN STREET
ORANGE, CA 92863

TRC
21 TECHNOLOGY DR
IRVINE, CA 92618

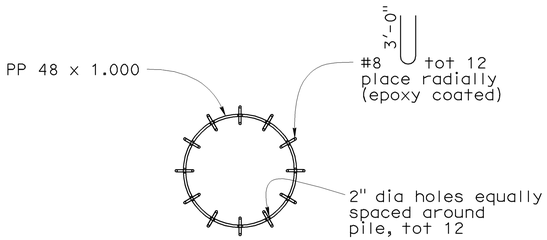

PP = Steel pipe pile

SECTION F-F
No Scale

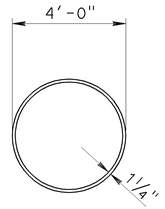

SECTION G-G
No Scale

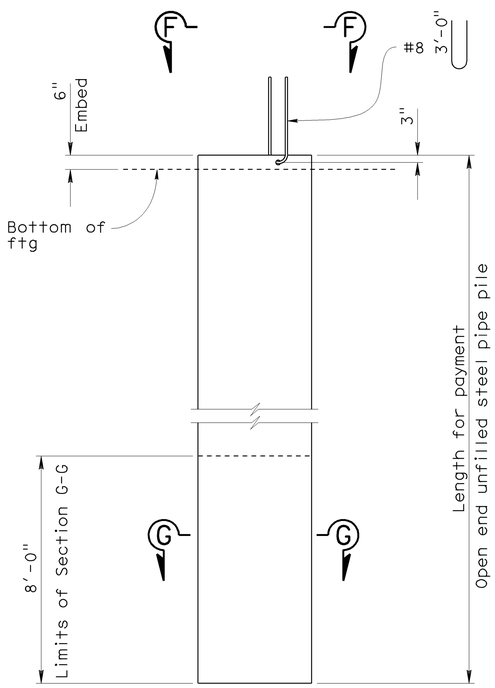

ELEVATION

48" DIA STEEL PIPE PILE DETAILS
No Scale

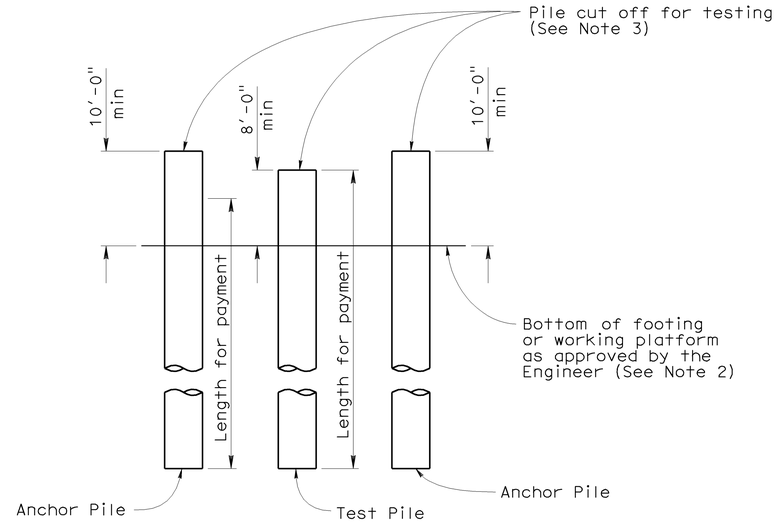

PILE LOAD TEST ELEVATION
1/8"=1'-0"

NOTES

1. For anchor pile and test pile tip elevations, see "Foundation Plan" sheet
2. Load test site must be level, smooth, and free of debris, water and mud
3. Top of load test and anchor piles to be smooth and level
4. Test piles and anchor piles shall be dynamically monitored
5. Load test frame and load test anchorage details to be provided by Others

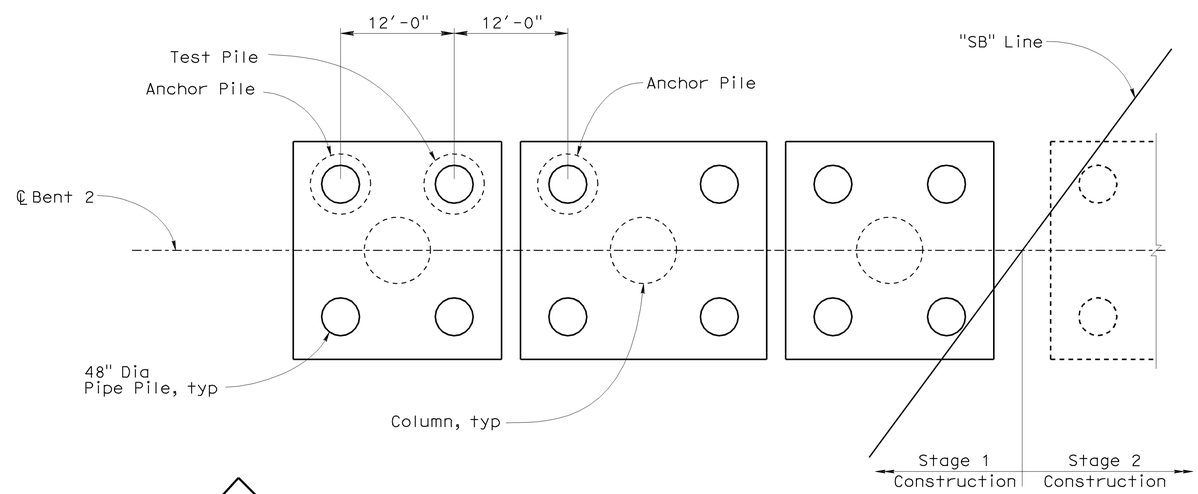

N

PILE LOAD TEST PLAN
1/8"=1'-0"

Sudhakar Vatti
DESIGN OVERSIGHT Sudhakar Vatti
8-10-09
SIGN OFF DATE

	BY	CHECKED
DESIGN	A. Priley	J. Hermstad
DETAILS	K. Michalski	J. Hermstad
QUANTITIES	A. Priley	J. Wong

PREPARED FOR THE STATE OF CALIFORNIA DEPARTMENT OF TRANSPORTATION

A. Priley
PROJECT ENGINEER

BRIDGE NO. 55-1099
POST MILE 22.64

SEAL BEACH BLVD OC (REPLACE)
BENT DETAILS NO. 3

DESIGN DETAIL SHEET (ENGLISH) (REV. 2/25/05)

ORIGINAL SCALE IN INCHES FOR REDUCED PLANS 0 1 2 3

CU 12235
EA 071631

DISREGARD PRINTS BEARING EARLIER REVISION DATES

REVISION DATES (PRELIMINARY STAGE ONLY) 09/17/08 04/06/09 07/27/09

SHEET 22 OF 45

FILE => 55-1099-h-bdt03.dgn

USERNAME => trienard DATE PLOTTED => 04-FEB-2010 TIME PLOTTED => 06:17

DIST	COUNTY	ROUTE	POST MILES TOTAL PROJECT	SHEET No	TOTAL SHEETS
12	Ora	22,405, 605	R0.3/R0.9, 22.3/24.0,3.0/R1.6	1681	1929

REGISTERED CIVIL ENGINEER 07-27-09 DATE

2-1-10
PLANS APPROVAL DATE

REGISTERED PROFESSIONAL ENGINEER A. Priley No. C 73375 Exp. 12-31-10 CIVIL STATE OF CALIFORNIA

The State of California or its officers or agents shall not be responsible for the accuracy or completeness of electronic copies of this plan sheet.

OCTA
550 SOUTH MAIN STREET
ORANGE, CA 92863

TRC
21 TECHNOLOGY DR
IRVINE, CA 92618

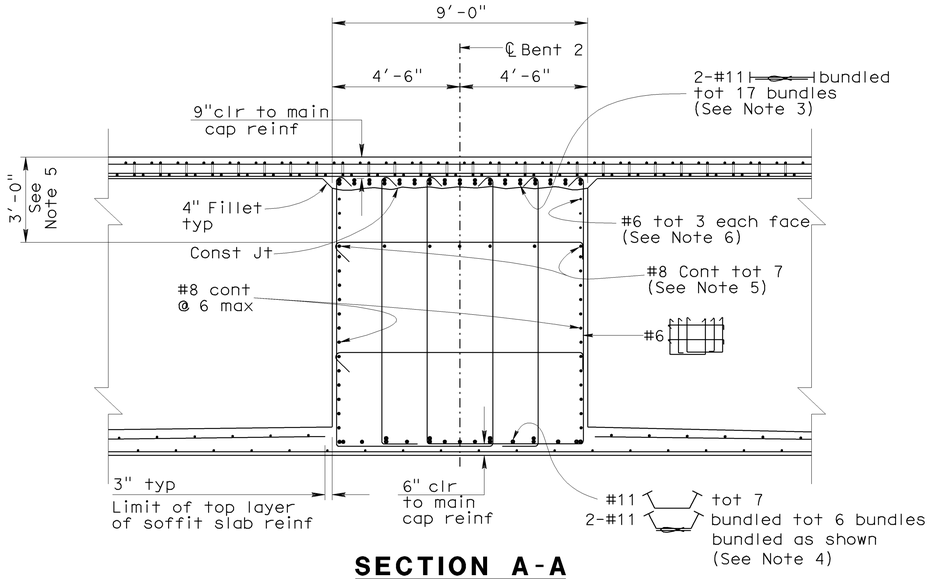

SECTION A-A

3/8"= 1'-0"

LEGEND

Indicates bundled bars

Indicates headed bar reinforcement

NOTES

1. For locations of Sections A-A and B-B, see "Bent 2 Layout - Stage 1" and "Bent 2 Layout - Stage 2" sheets
2. For limits of J-dowel and cross-tie reinforcement, see "Bent Details No. 5" sheet. Place J-dowel around slab longitudinal reinf to maintain 2" clr to top of deck
3. For top main bent cap reinforcement, the top bars in the bundled #11 reinforcement are headed (tot 17 headed bars).
4. For bottom main bent cap reinforcement, the top bars in the vertical bundled #11 reinforcement, the inside bars in the horizontal bundled #11 reinforcement, and all individual #11 bars are headed (tot 13 headed bars). These bars are bent up at the face of the exterior girder
5. 3'-0" dimension is approximate. Place reinforcement a minimum of 3" below construction joint, but place to clear prestessing ducts
6. #6 side face reinforcement shall be discontinuous at prestressing ducts

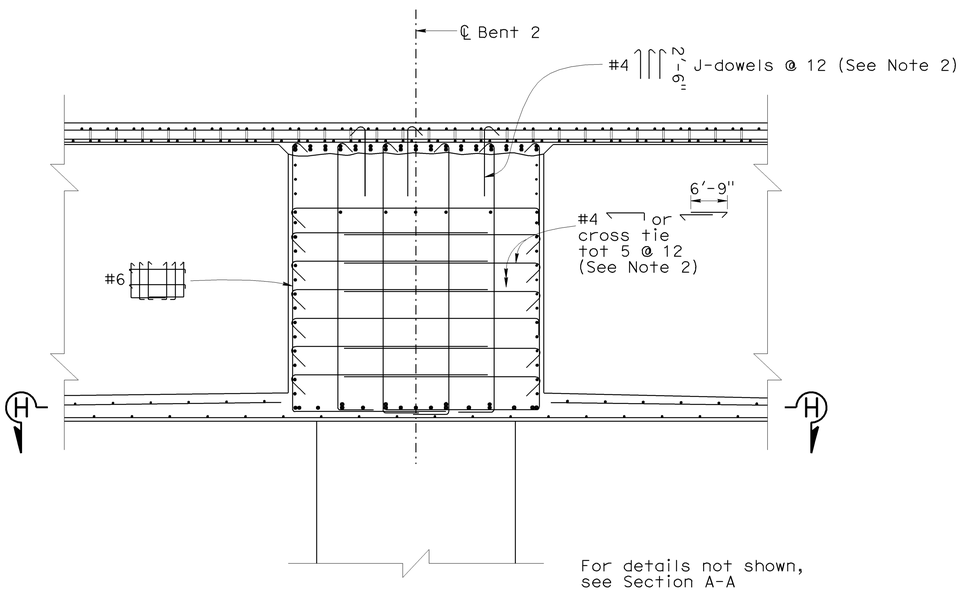

SECTION B-B

3/8"= 1'-0"

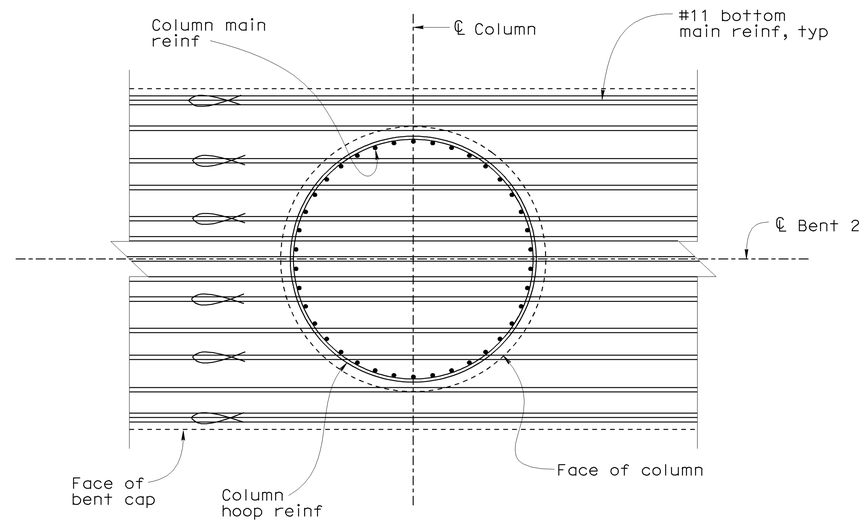

BAR PLACEMENT DETAIL (SECTION H-H)

1/2"= 1'-0"

Sudhakar Vatti
DESIGN OVERSIGHT Sudhakar Vatti
8-10-09
SIGN OFF DATE

	BY	CHECKED
DESIGN	A. Priley	J. Hermstad
DETAILS	K. Michalski	J. Hermstad
QUANTITIES	A. Priley	J. Wong

PREPARED FOR THE STATE OF CALIFORNIA DEPARTMENT OF TRANSPORTATION

A. Priley
PROJECT ENGINEER

BRIDGE NO. 55-1099
POST MILE 22.64

SEAL BEACH BLVD OC (REPLACE)
BENT DETAILS NO. 4

DESIGN DETAIL SHEET (ENGLISH) (REV. 2/25/05)

ORIGINAL SCALE IN INCHES FOR REDUCED PLANS 0 1 2 3

CU 12235
EA 071631

DISREGARD PRINTS BEARING EARLIER REVISION DATES

REVISION DATES (PRELIMINARY STAGE ONLY) 09/17/08 04/06/09 07/27/09

SHEET 23 OF 45

FILE => 55-1099-h-bdt04.dgn

USERNAME => friehard DATE PLOTTED => 04-FEB-2010 TIME PLOTTED => 06:18

DIST	COUNTY	ROUTE	POST MILES TOTAL PROJECT	SHEET No	TOTAL SHEETS
12	Ora	22,405, 605	R0.3/R0.9, 22.3/24.0,3.0/R1.6	1682	1929

REGISTERED CIVIL ENGINEER 07-27-09 DATE

2-1-10
PLANS APPROVAL DATE

REGISTERED PROFESSIONAL ENGINEER A. Priley No. C 73375 Exp. 12-31-10 CIVIL STATE OF CALIFORNIA

The State of California or its officers or agents shall not be responsible for the accuracy or completeness of electronic copies of this plan sheet.

OCTA
550 SOUTH MAIN STREET
ORANGE, CA 92863

TRC
21 TECHNOLOGY DR
IRVINE, CA 92618

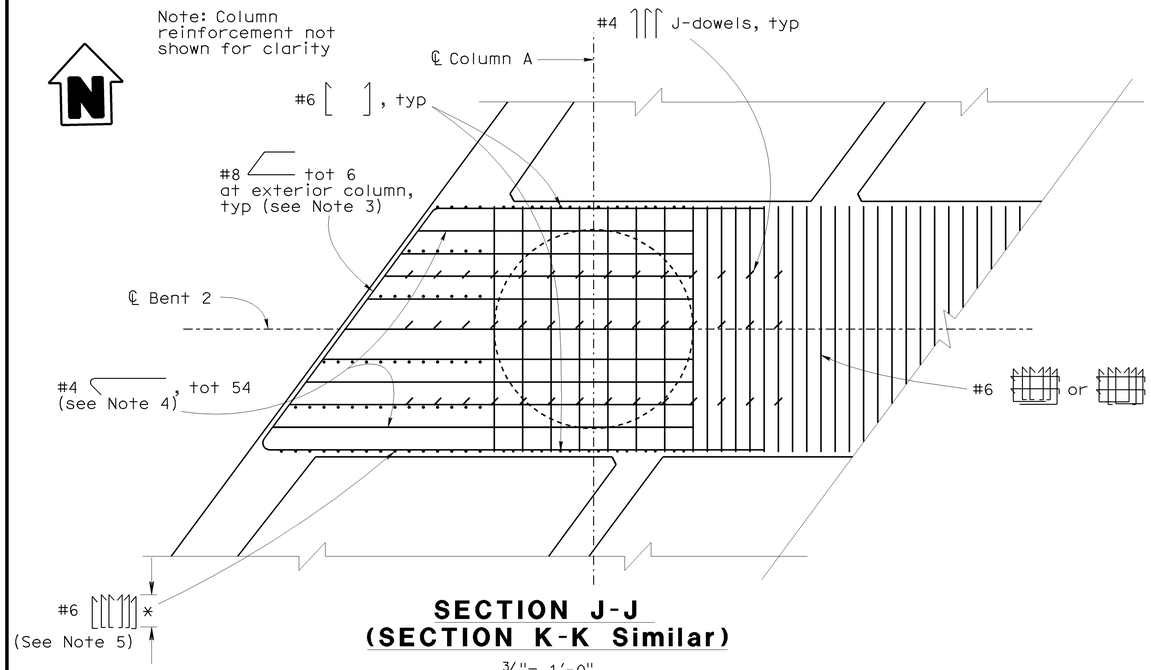

SECTION J-J
(SECTION K-K Similar)

3/8"= 1'-0"

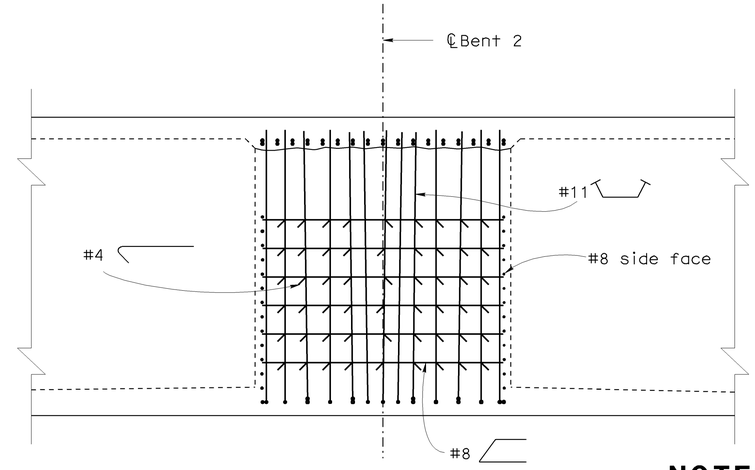

Note: All reinforcement not shown

VIEW L-L

3/8"= 1'-0"

LEGEND

Indicates bundled bars

Indicates headed bar reinforcement

NOTES

1. Place stirrups normal to and space along ℄ Bent
2. Place along exterior face of bent cap and space between #6 stirrups within column area
3. Place #8 bar around bent-up #11 and bundle with #8 side face. Extend legs 6'-0" beyond ℄ column
4. Hook around bent-up #11 bars and #8 horizontal end cap ties. Extend leg 3'-6" beyond ℄ column
5. Omit stirrup leg(s) as required along skewed face of bent cap at edge of exterior girder.

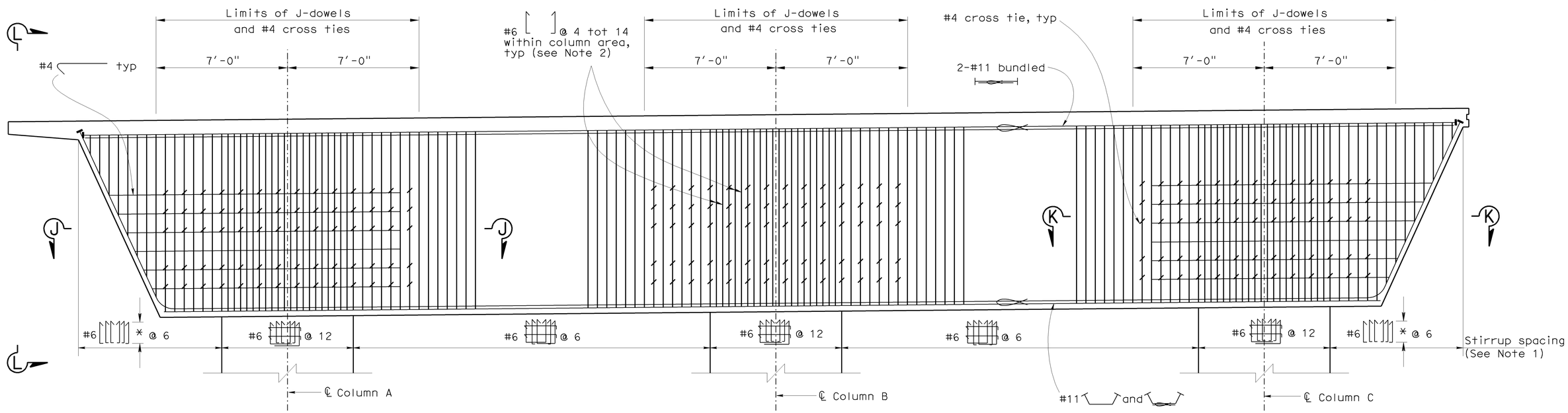

* Height varies along exterior girder

BENT CAP REINFORCEMENT DETAIL

3/8"= 1'-0"
(Stage 1 shown, Stage 2 similar)

Note: Not all reinforcement shown

Sudhakar Vatti
DESIGN OVERSIGHT Sudhakar Vatti
8-10-09
SIGN OFF DATE

	BY	CHECKED
DESIGN	A. Priley	J. Hermstad
DETAILS	K. Michalski	J. Hermstad
QUANTITIES	A. Priley	J. Wong

PREPARED FOR THE STATE OF CALIFORNIA DEPARTMENT OF TRANSPORTATION

A. Priley
PROJECT ENGINEER

BRIDGE NO. 55-1099
POST MILE 22.64

SEAL BEACH BLVD OC (REPLACE)
BENT DETAILS NO. 5

DESIGN DETAIL SHEET (ENGLISH) (REV. 2/25/05)

ORIGINAL SCALE IN INCHES FOR REDUCED PLANS 0 1 2 3

CU 12235
EA 071631

DISREGARD PRINTS BEARING EARLIER REVISION DATES

REVISION DATES (PRELIMINARY STAGE ONLY) 09/17/08 04/06/09 07/27/09

SHEET 24 OF 45

FILE => 55-1099-h-bdt05.dgn

USERNAME => trienord DATE PLOTTED => 04-FEB-2010 TIME PLOTTED => 06:18

DIST	COUNTY	ROUTE	POST MILES TOTAL PROJECT	SHEET No	TOTAL SHEETS
12	Ora	22,405, 605	R0.3/R0.9, 22.3/24.0,3.0/R1.6	1683	1929

REGISTERED CIVIL ENGINEER 07-27-09 DATE

2-1-10
PLANS APPROVAL DATE

REGISTERED PROFESSIONAL ENGINEER A. Priley No. C 73375 Exp. 12-31-10 CIVIL STATE OF CALIFORNIA

The State of California or its officers or agents shall not be responsible for the accuracy or completeness of electronic copies of this plan sheet.

OCTA
550 SOUTH MAIN STREET
ORANGE, CA 92863

TRC
21 TECHNOLOGY DR
IRVINE, CA 92618

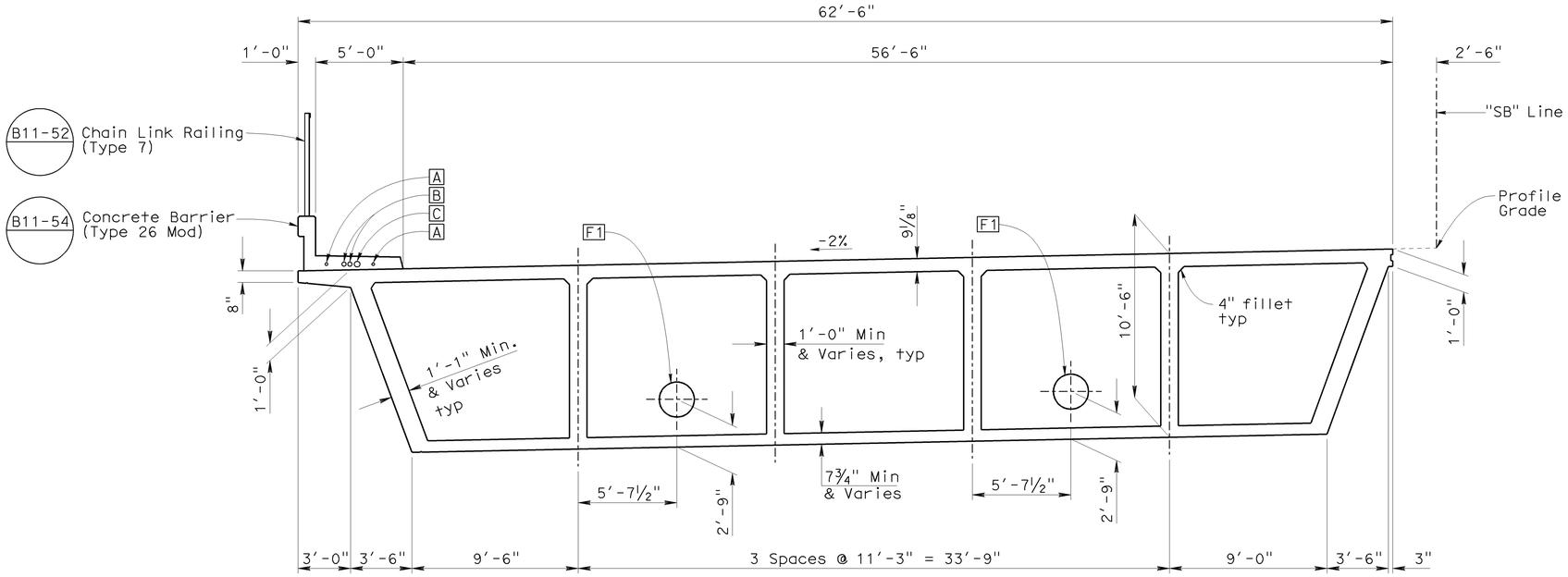

TYPICAL SECTION

1/4"= 1'-0"

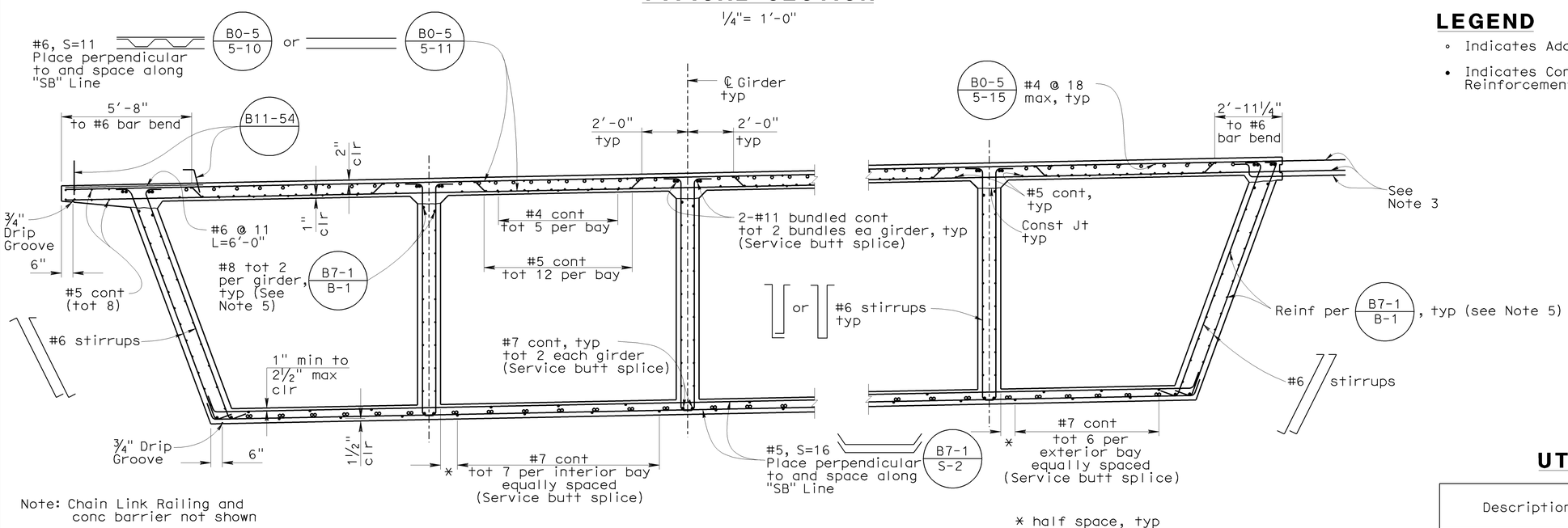

Note: Chain Link Railing and conc barrier not shown

* half space, typ

PART TYPICAL SECTION

B0-5 B7-1 B8-5

3/8"= 1'-0"

NOTES

1. For stirrup placement and prestressing information, see "Girder Layout - Stage 1" sheet
2. For additional slab reinforcement, see "Girder Reinforcement No. 2" sheet
3. For deck closure pour detail, see "Miscellaneous Details" sheet
4. Bottom slab reinforcement to be adjusted to accomodate soffit access openings
5. No splice permitted in longitudinal girder stem reinforcement within 32'-0" of ℄ Bent 2
6. For conduit sizes and spacing of conduits within concrete barrier, see "Miscellaneous Details" sheet

LEGEND

- ◦ Indicates Additional Slab Reinforcement
- • Indicates Continuous Slab and Girder Reinforcement

UTILITIES

- A Lighting Conduit
- B Fiber Optic (City of Seal Beach) (3" plastic pipe)
- C Cable Television (Time Warner) (4" plastic pipe)
- F1 Future Utility

UTILITY OPENINGS

Description	Opening @ Abut End Diapragms	Opening @ Bent 2
F1 Future Utility	24"H x 36" W	24" Dia

Sudhakar Vatti
DESIGN OVERSIGHT Sudhakar Vatti
8-10-09
SIGN OFF DATE

	BY	CHECKED
DESIGN	A. Priley	J. Hermstad
DETAILS	K. Michalski	J. Hermstad
QUANTITIES	A. Priley	J. Wong

PREPARED FOR THE STATE OF CALIFORNIA DEPARTMENT OF TRANSPORTATION

A. Priley
PROJECT ENGINEER

BRIDGE NO. 55-1099
POST MILE 22.64

SEAL BEACH BLVD OC (REPLACE)
TYPICAL SECTION - STAGE 1

DESIGN DETAIL SHEET (ENGLISH) (REV. 2/25/05)

ORIGINAL SCALE IN INCHES FOR REDUCED PLANS 0 1 2 3

CU 12235
EA 071631

DISREGARD PRINTS BEARING EARLIER REVISION DATES
REVISION DATES (PRELIMINARY STAGE ONLY) 09/17/08 04/06/09 07/27/09

SHEET 25 OF 45

FILE => 55-1099-k-ts01.dgn

USERNAME => trlemard DATE PLOTTED => 04-FEB-2010 TIME PLOTTED => 06:18

DIST	COUNTY	ROUTE	POST MILES TOTAL PROJECT	SHEET No	TOTAL SHEETS
12	Ora	22,405, 605	R0.3/R0.9, 22.3/24.0,3.0/R1.6	1684	1929

REGISTERED CIVIL ENGINEER 07-27-09 DATE

2-1-10
PLANS APPROVAL DATE

REGISTERED PROFESSIONAL ENGINEER A. Priley No. C 73375 Exp. 12-31-10 CIVIL STATE OF CALIFORNIA

The State of California or its officers or agents shall not be responsible for the accuracy or completeness of electronic copies of this plan sheet.

OCTA
550 SOUTH MAIN STREET
ORANGE, CA 92863

TRC
21 TECHNOLOGY DR
IRVINE, CA 92618

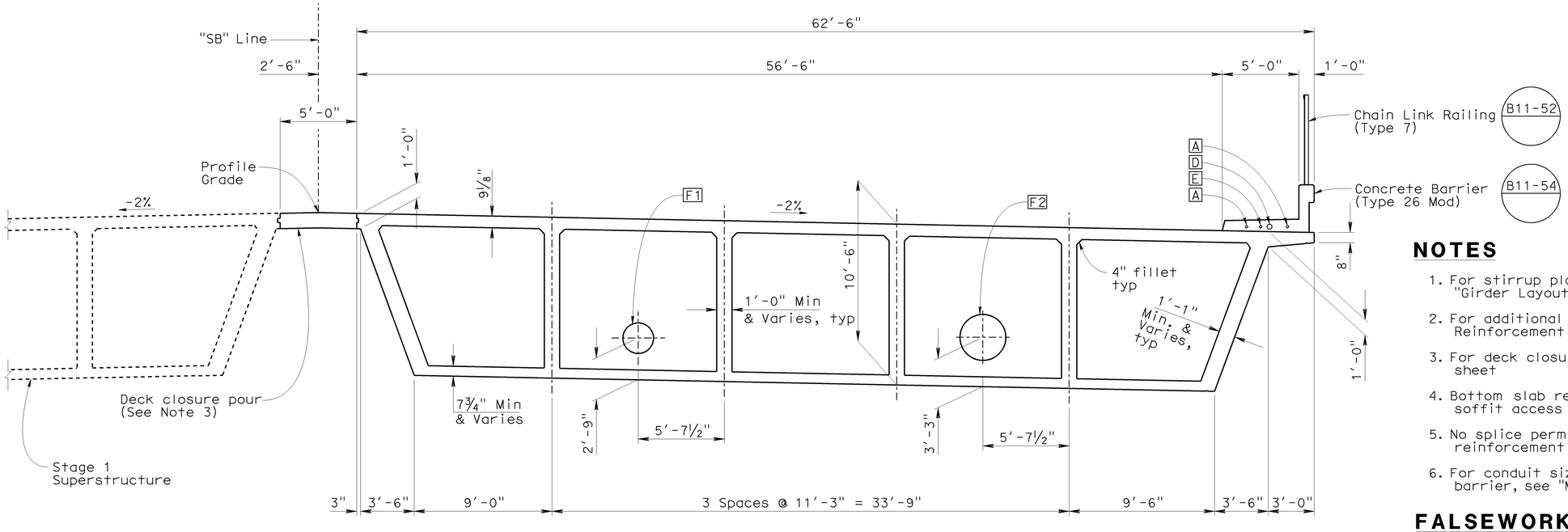

TYPICAL SECTION

1/4"= 1'-0"

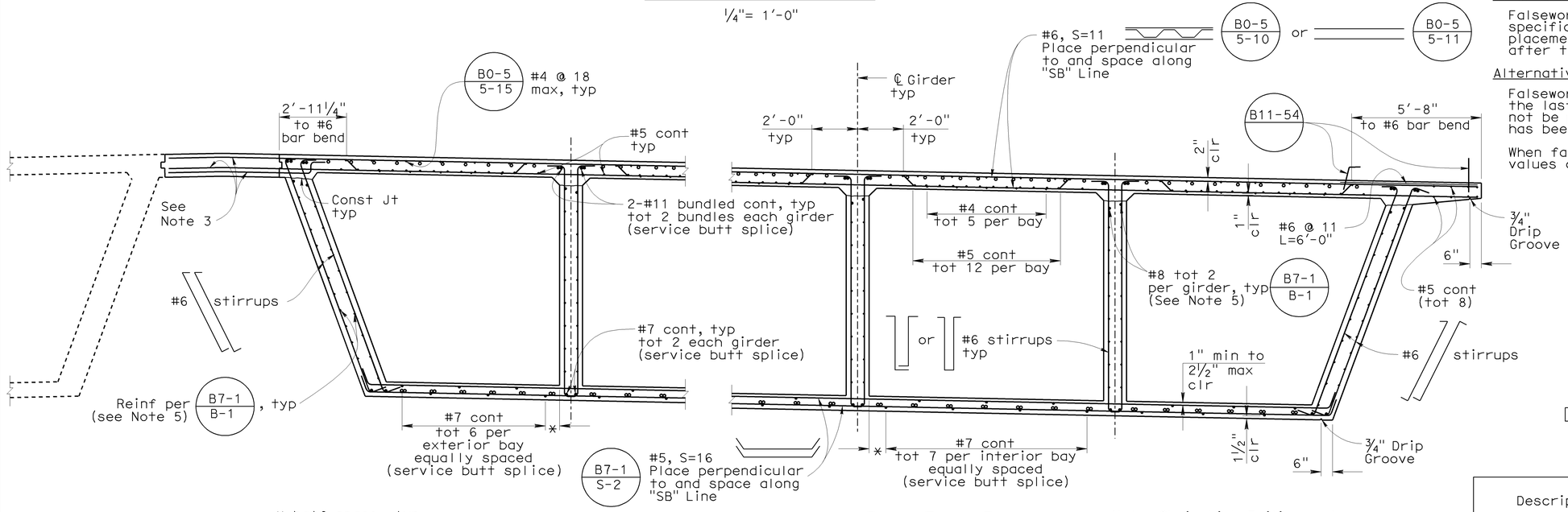

PART TYPICAL SECTION

B0-5 B7-1 B8-5

3/8"= 1'-0"

Note: Chain Link Railing and conc barrier not shown

NOTES

1. For stirrup placement and prestressing information, see "Girder Layout - Stage 2" sheet
2. For additional slab reinforcement, see "Girder Reinforcement No. 2" sheet
3. For deck closure pour details, see "Miscellaneous Details sheet
4. Bottom slab reinforcement to be adjusted to accomodate soffit access openings
5. No splice permitted in longitudinal girder stem reinforcement within 32'-0" of ℄ Bent 2
6. For conduit sizes and spacing of conduits within concrete barrier, see "Miscellaneous Details" sheet

FALSEWORK RELEASE

Alternative 1

Falsework shall be removed as soon as permitted by the specifications. Closure pour shall not be placed prior to placement of concrete barriers, nor sooner than 60 days after the falsework has been released.

Alternative 2

Falsework shall not be released less than 28 days after the last concrete has been placed. Closure pour shall not be placed sooner than 14 days after the falsework has been released.

When falsework release Alternative 2 is used, camber values are 0.75 times those shown

LEGEND

- ∘ Indicates Additional Slab Reinforcement
- • Indicates Continuous Slab and Girder Reinforcement

UTILITIES

- A Lighting Conduit
- D Future Utility Opening (4" plastic pipe)
- E Communications (Qwest) (2" plastic pipe)
- F1 and F2 Future Utility

UTILITY OPENINGS

Description	Opening @ Abut End Diapragms	Opening @ Bent 2
F1 Future Utility	24" H x 36" W	24" Dia
F2 Future Utility	36" H x 48" W	36" Dia

Sudhakar Vatti
DESIGN OVERSIGHT Sudhakar Vatti

8-10-09
SIGN OFF DATE

	BY	CHECKED
DESIGN	A. Priley	J. Hermstad
DETAILS	K. Michalski	J. Hermstad
QUANTITIES	A. Priley	J. Wong

PREPARED FOR THE STATE OF CALIFORNIA DEPARTMENT OF TRANSPORTATION

A. Priley
PROJECT ENGINEER

BRIDGE NO. 55-1099
POST MILE 22.64

SEAL BEACH BLVD OC (REPLACE)
TYPICAL SECTION - STAGE 2

DESIGN DETAIL SHEET (ENGLISH) (REV. 2/25/05)

ORIGINAL SCALE IN INCHES FOR REDUCED PLANS 0 1 2 3

CU 12235
EA 071631

DISREGARD PRINTS BEARING EARLIER REVISION DATES

REVISION DATES (PRELIMINARY STAGE ONLY) 09/17/08 04/06/09 07/27/09

SHEET 26 OF 45

FILE => 55-1099-k-ts02.dgn

USERNAME => trlenard DATE PLOTTED => 04-FEB-2010 TIME PLOTTED => 06:18

DIST	COUNTY	ROUTE	POST MILES TOTAL PROJECT	SHEET No	TOTAL SHEETS
12	Ora	22,405, 605	R0.3/R0.9, 22.3/24.0,3.0/R1.6	1685	1929

REGISTERED CIVIL ENGINEER 07-27-09 DATE

2-1-10
PLANS APPROVAL DATE

REGISTERED PROFESSIONAL ENGINEER A. Priley No. C 73375 Exp. 12-31-10 CIVIL STATE OF CALIFORNIA

The State of California or its officers or agents shall not be responsible for the accuracy or completeness of electronic copies of this plan sheet.

OCTA
550 SOUTH MAIN STREET
ORANGE, CA 92863

TRC
21 TECHNOLOGY DR
IRVINE, CA 92618

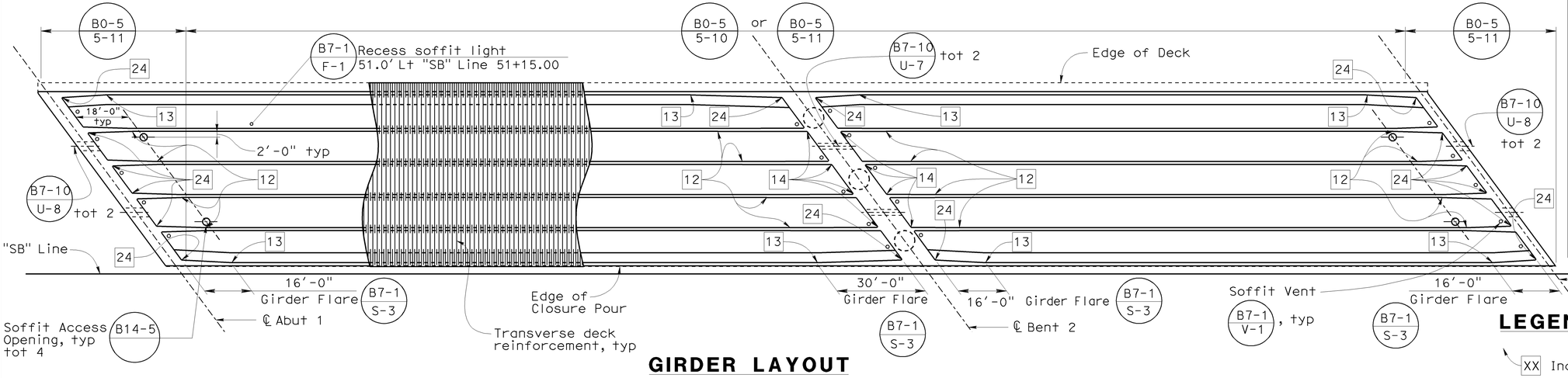

GIRDER LAYOUT

1"= 20'

LEGEND

XX Indicates girder stem width in inches

∘ Indicates soffit vent

☒ Indicates theoretical point of no movement for prestressing

NOTES

1. For utility opening sizes, see "Typical Section - Stage 1" sheet

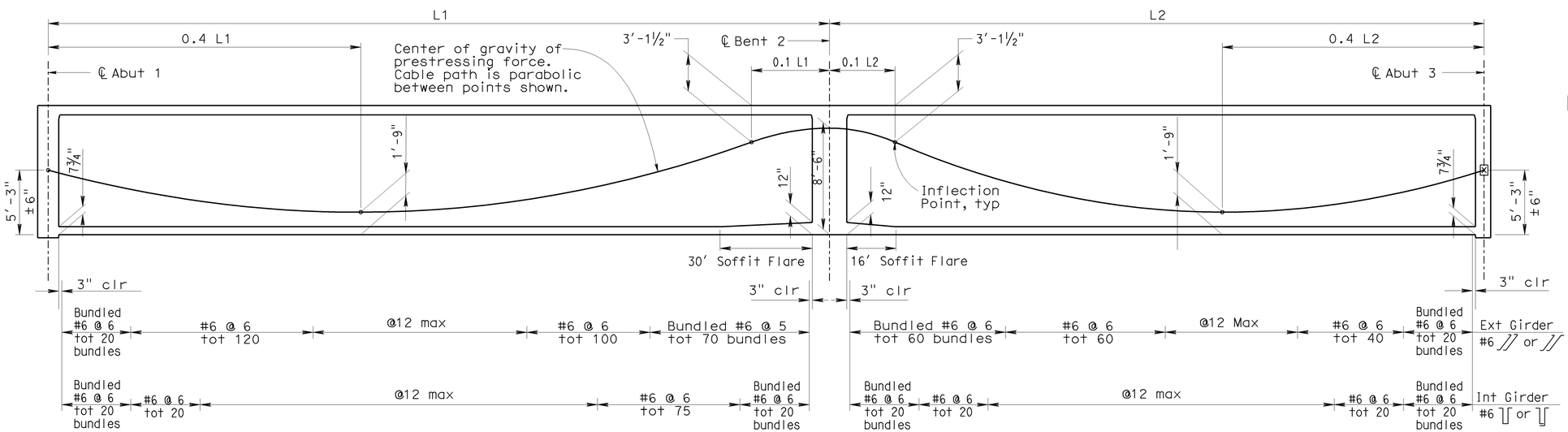

LONGITUDINAL SECTION

No Scale

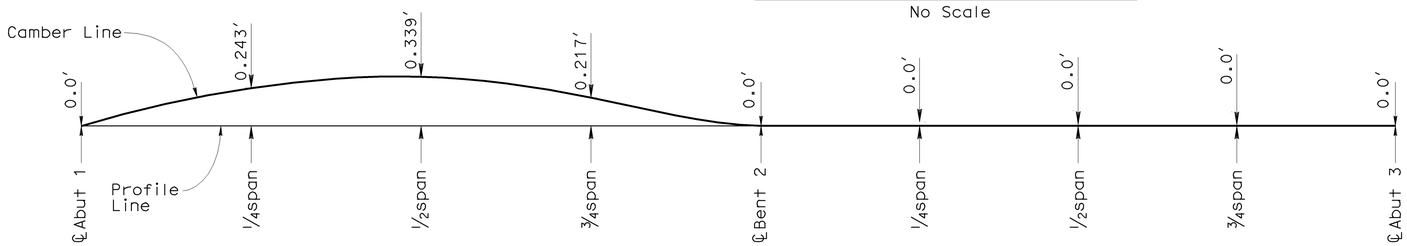

CAMBER DIAGRAM

No Scale

(Does not include allowance for falsework settlement)

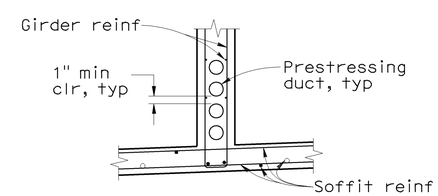

PRESTRESS DUCT DETAIL

Interior girder shown, exterior girder similar

No Scale

PRESTRESSING NOTES

270 ksi Low Relaxation Strands:		
Pjack	= 28500	kips
Anchor Set	= ⅜	inch
Total Number of Girders	= 6	
Friction curvature coefficient	μ = 15 x 10^{-2} (1/rad)	
Friction wobble coefficient	K = 20 x 10^{5}(1/ft)	
Distribution of prestress force (Pjack) between girders shall not exceed the ratio of 3:2.		
Maximum final force variation between girders shall not exceed 725 kips.		
Concrete: f'_c = 5.5 ksi @ 28 days f'_{ci} = 4.0 ksi @ time of stressing		
Contractor shall submit elongation calculations based on inital stress at ☒ = 0.846 times jacking stress		
One end stressing shall be performed from Abutment 1 only		

Sudhakar Vatti
DESIGN OVERSIGHT Sudhakar Vatti
8-10-09
SIGN OFF DATE

	BY	CHECKED
DESIGN	A. Priley	J. Hermstad
DETAILS	K. Michalski	J. Hermstad
QUANTITIES	A. Priley	J. Wong

PREPARED FOR THE STATE OF CALIFORNIA DEPARTMENT OF TRANSPORTATION

A. Priley
PROJECT ENGINEER

BRIDGE NO. 55-1099
POST MILE 22.64

SEAL BEACH BLVD OC (REPLACE)
GIRDER LAYOUT - STAGE 1

DESIGN DETAIL SHEET (ENGLISH) (REV. 2/25/05)

ORIGINAL SCALE IN INCHES FOR REDUCED PLANS 0 1 2 3

CU 12235
EA 071631

DISREGARD PRINTS BEARING EARLIER REVISION DATES

REVISION DATES (PRELIMINARY STAGE ONLY) 09/17/08 04/06/09 07/27/09

SHEET 27 OF 45

FILE => 55-1099-1-glo01.dgn

USERNAME => rfriehard DATE PLOTTED => 04-FEB-2010 TIME PLOTTED => 06:18

DIST	COUNTY	ROUTE	POST MILES TOTAL PROJECT	SHEET No	TOTAL SHEETS
12	Ora	22,405, 605	R0.3/R0.9, 22.3/24.0,3.0/R1.6	1686	1929

REGISTERED CIVIL ENGINEER 07-27-09 DATE

2-1-10
PLANS APPROVAL DATE

REGISTERED PROFESSIONAL ENGINEER A. Priley No. C 73375 Exp. 12-31-10 CIVIL STATE OF CALIFORNIA

The State of California or its officers or agents shall not be responsible for the accuracy or completeness of electronic copies of this plan sheet.

OCTA
550 SOUTH MAIN STREET
ORANGE, CA 92863

TRC
21 TECHNOLOGY DR
IRVINE, CA 92618

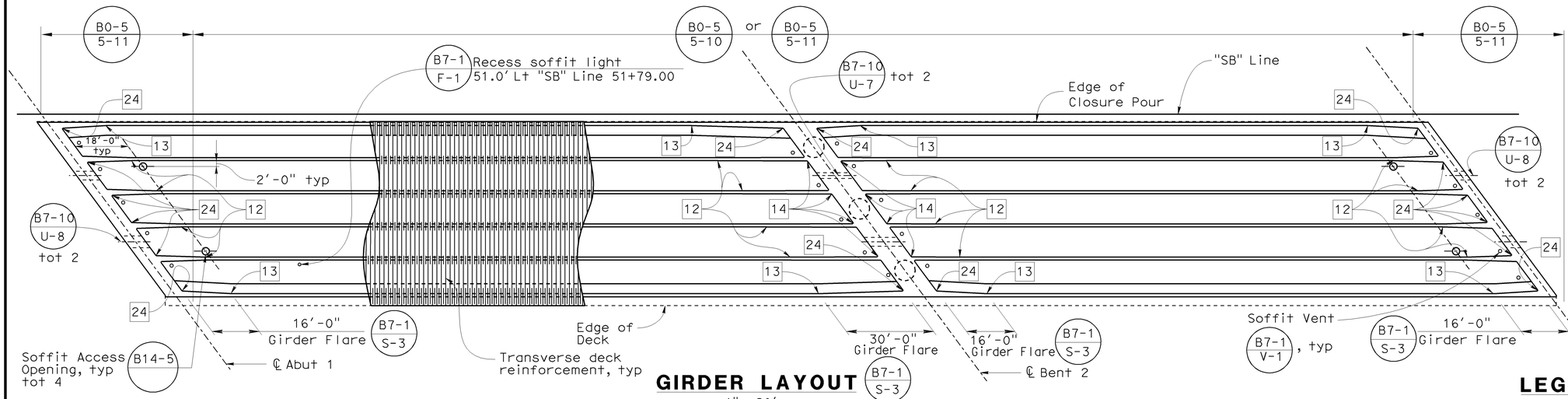

GIRDER LAYOUT

1"= 20'

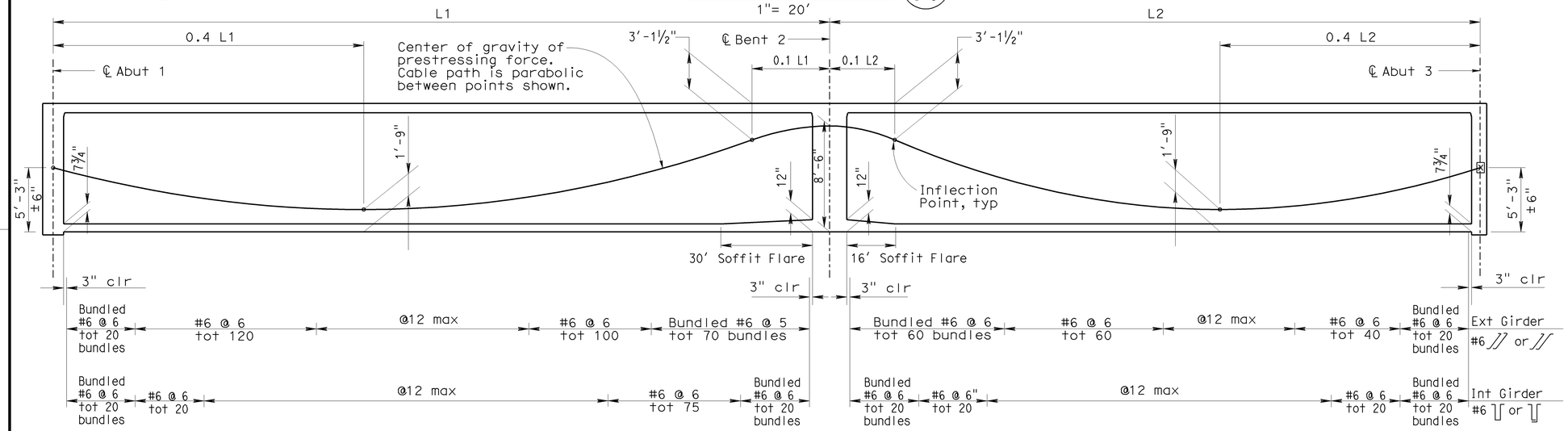

LONGITUDINAL SECTION

No Scale

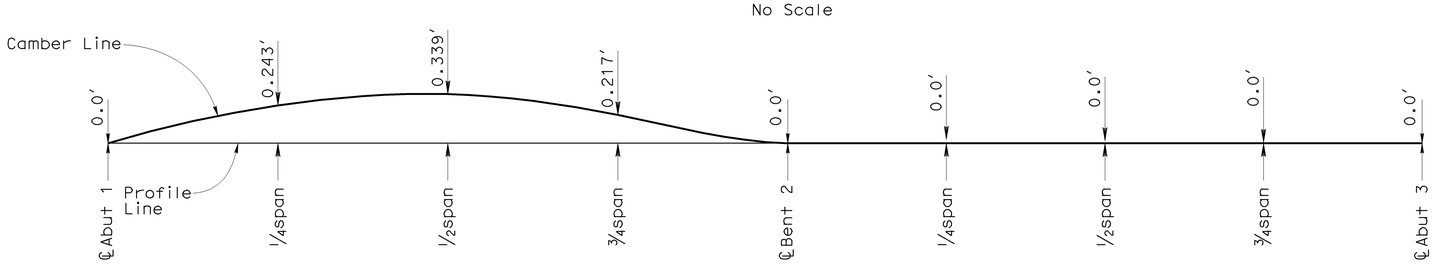

CAMBER DIAGRAM

No Scale

(Does not include allowance for falsework settlement)

LEGEND

XX Indicates girder stem width in inches

∘ Indicates soffit vent

⊠ Indicates theoretical point of no movement for prestressing

NOTES

1. For utility opening sizes, see "Typical Section - Stage 2" sheet
2. For prestress duct detail, see "Girder Layout - Stage 1" sheet

PRESTRESSING NOTES

270 ksi Low Relaxation Strands:		
Pjack	= 28500	kips
Anchor Set	= ⅜	inch
Total Number of Girders	= 6	
Friction curvature coefficient	μ = 15 x 10^{-2} (1/rad)	
Friction wobble coefficient	K = 20 x 10^{-5}(1/ft)	
Distribution of prestress force (Pjack) between girders shall not exceed the ratio of 3:2.		
Maximum final force variation between girders shall not exceed 725 kips.		
Concrete: f'_c = 5.5 ksi @ 28 days f'_{ci} = 4.0 ksi @ time of stressing		
Contractor shall submit elongation calculations based on inital stress at ⊠ = 0.846 times jacking stress		
One end stressing shall be performed from Abutment 1 only		

Sudhakar Vatti
DESIGN OVERSIGHT Sudhakar Vatti
8-10-09
SIGN OFF DATE

	BY	CHECKED
DESIGN	A. Priley	J. Hermstad
DETAILS	K. Michalski	J. Hermstad
QUANTITIES	A. Priley	J. Wong

PREPARED FOR THE STATE OF CALIFORNIA DEPARTMENT OF TRANSPORTATION

A. Priley
PROJECT ENGINEER

BRIDGE NO. 55-1099
POST MILE 22.64

SEAL BEACH BLVD OC (REPLACE)
GIRDER LAYOUT - STAGE 2

DESIGN DETAIL SHEET (ENGLISH) (REV. 2/25/05)

ORIGINAL SCALE IN INCHES FOR REDUCED PLANS 0 1 2 3

CU 12235
EA 071631

DISREGARD PRINTS BEARING EARLIER REVISION DATES → 09/17/08 04/06/09 07/27/09

REVISION DATES (PRELIMINARY STAGE ONLY)

SHEET 28 OF 45

FILE => 55-1099-1-glo02.dgn

USERNAME => trlenard DATE PLOTTED => 04-FEB-2010 TIME PLOTTED => 06:18

DIST	COUNTY	ROUTE	POST MILES TOTAL PROJECT	SHEET No	TOTAL SHEETS
12	Ora	22,405, 605	R0.3/R0.9, 22.3/24.0,3.0/R1.6	1687	1929

REGISTERED CIVIL ENGINEER 07-27-09 DATE

2-1-10
PLANS APPROVAL DATE

REGISTERED PROFESSIONAL ENGINEER A. Priley No. C 73375 Exp. 12-31-10 CIVIL STATE OF CALIFORNIA

The State of California or its officers or agents shall not be responsible for the accuracy or completeness of electronic copies of this plan sheet.

OCTA
550 SOUTH MAIN STREET
ORANGE, CA 92863

TRC
21 TECHNOLOGY DR
IRVINE, CA 92618

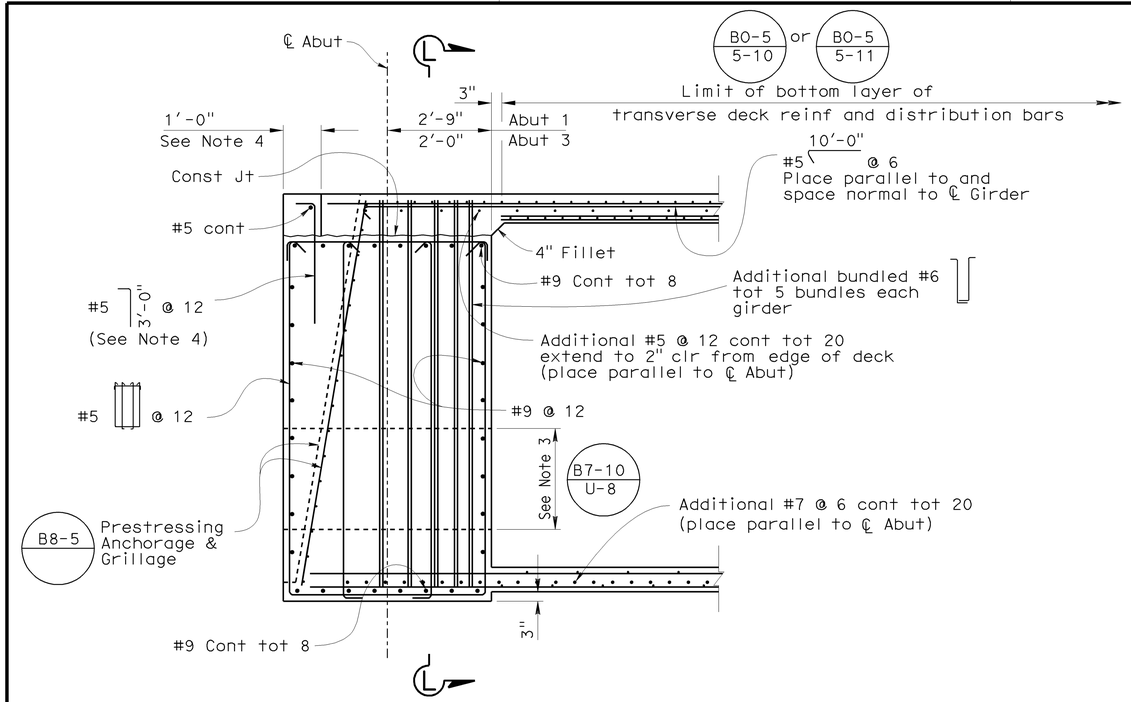

END DIAPHRAGM DETAIL

½"= 1'-0"

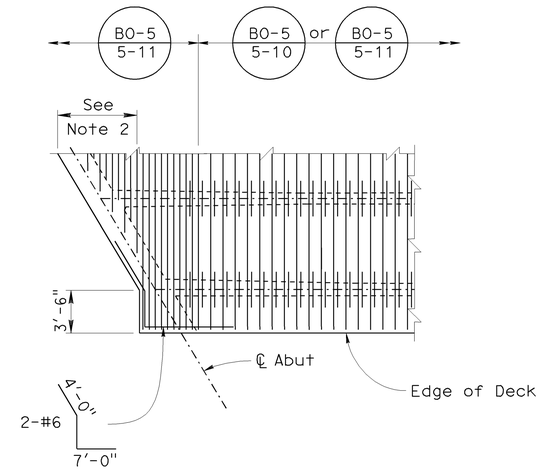

OBTUSE CORNER DETAIL

No Scale

NOTES

1. Place typical top and bottom transverse reinforcement between rear face of end diaphragm and edge of deck
2. Extend alternate top transverse reinf 1'-6" into end diaphragm. Terminate remaining transverse reinf 3" from face of end diaphragm.
3. For location and size of utility openings, see "Typical Section - Stage 1" and "Typical Section - Stage 2" sheets
4. Reinforcing bars may be adjusted as necessary to accomodate installation of joint seal assembly upon approval of the joint seal assembly shop drawings and as directed by the Engineer

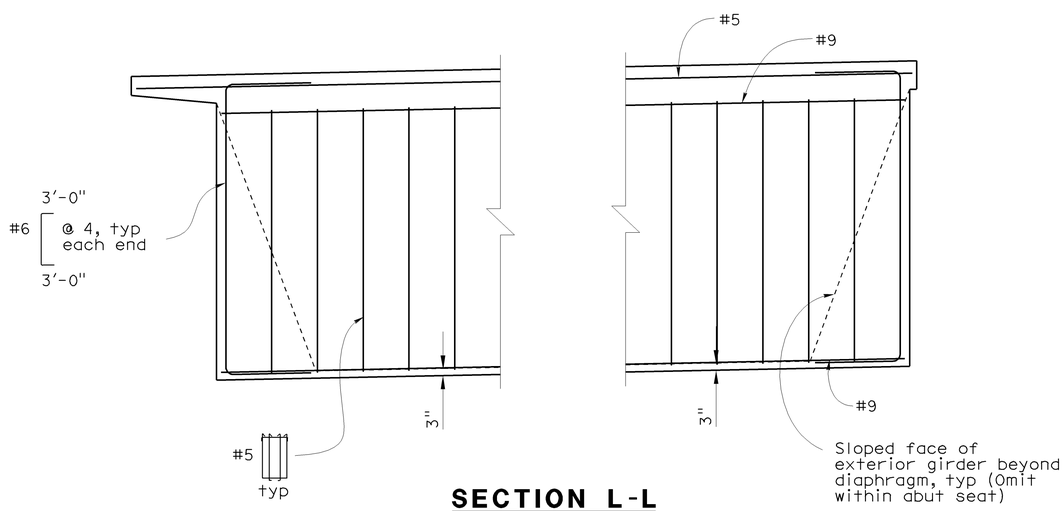

SECTION L-L

⅜" = 1'-0"

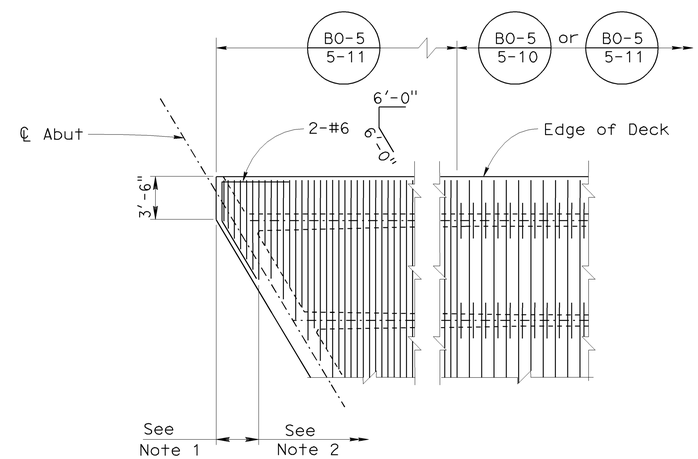

ACUTE CORNER DETAIL

No Scale

Sudhakar Vatti
DESIGN OVERSIGHT Sudhakar Vatti
8-10-09
SIGN OFF DATE

	BY	CHECKED
DESIGN	A. Priley	J. Hermstad
DETAILS	K. Michalski	J. Hermstad
QUANTITIES	A. Priley	J. Wong

PREPARED FOR THE STATE OF CALIFORNIA DEPARTMENT OF TRANSPORTATION

A. Priley
PROJECT ENGINEER

BRIDGE NO. 55-1099
POST MILE 22.64

SEAL BEACH BLVD OC (REPLACE)
GIRDER REINFORCEMENT NO. 1

DESIGN DETAIL SHEET (ENGLISH) (REV. 2/25/05)

ORIGINAL SCALE IN INCHES FOR REDUCED PLANS 0 1 2 3

CU 12235
EA 071631

DISREGARD PRINTS BEARING EARLIER REVISION DATES

REVISION DATES (PRELIMINARY STAGE ONLY) 09/17/08 04/06/09 07/27/09

SHEET 29 OF 45

FILE => 55-1099-o-grf01.dgn

USERNAME => trienard DATE PLOTTED => 04-FEB-2010 TIME PLOTTED => 06:18

DIST	COUNTY	ROUTE	POST MILES TOTAL PROJECT	SHEET No	TOTAL SHEETS
12	Ora	22,405, 605	R0.3/R0.9, 22.3/24.0,3.0/R1.6	1688	1929

REGISTERED CIVIL ENGINEER 07-27-09 DATE

2-1-10
PLANS APPROVAL DATE

REGISTERED PROFESSIONAL ENGINEER A. Priley No. C 73375 Exp. 12-31-10 CIVIL STATE OF CALIFORNIA

The State of California or its officers or agents shall not be responsible for the accuracy or completeness of electronic copies of this plan sheet.

OCTA
550 SOUTH MAIN STREET
ORANGE, CA 92863

TRC
21 TECHNOLOGY DR
IRVINE, CA 92618

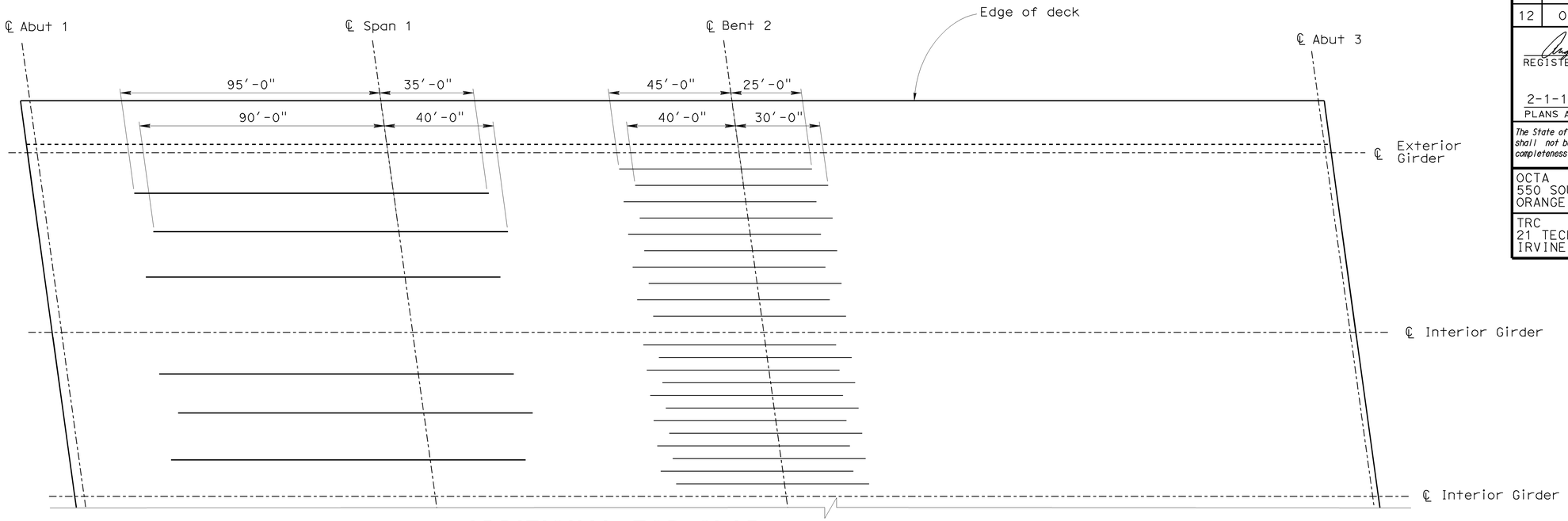

ADDITIONAL TOP SLAB LONGITUDINAL REINFORCEMENT

No scale

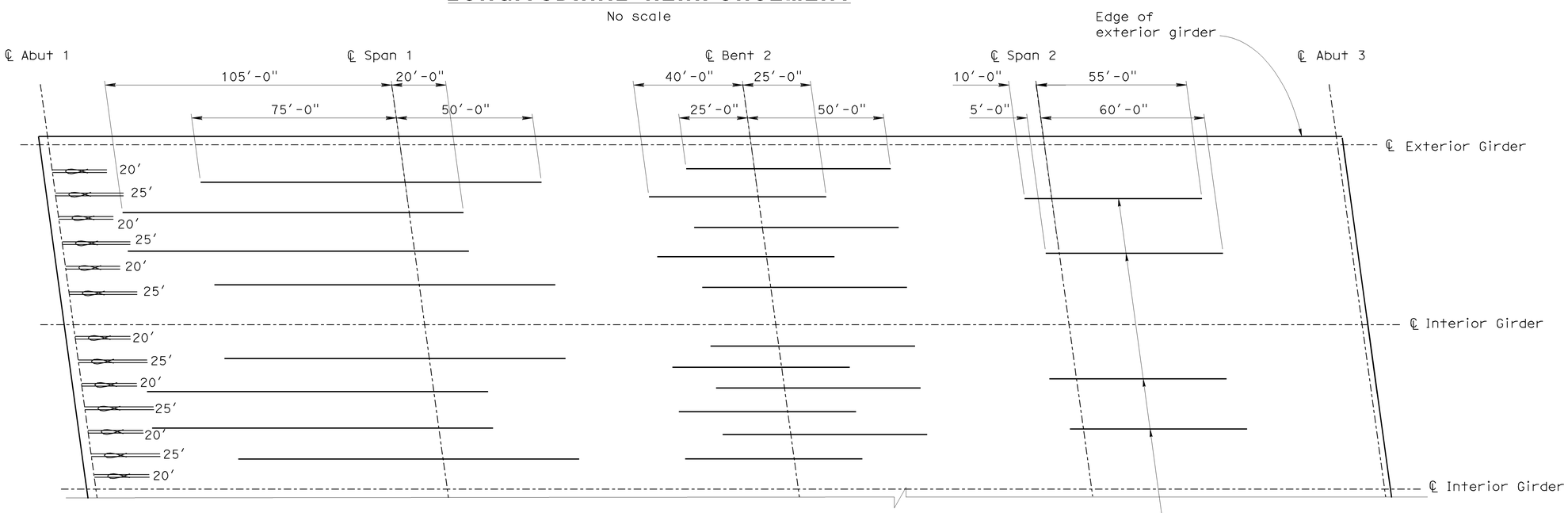

ADDITIONAL BOTTOM SLAB LONGITUDINAL REINFORCEMENT

No scale

NOTES

1. All distances measured from center line
2. All bars #11 except as noted
3. Stage 1 shown, Stage 2 similar
4. Additional top and bottom slab reinf shall meet service splice requirements. Splices shall be staggered. No splices are allowed within 25'-0" of ℄ span or ℄ bent.

LEGEND

Indicates bundled bars

Sudhakar Vatti
DESIGN OVERSIGHT Sudhakar Vatti
8-10-09
SIGN OFF DATE

	BY	CHECKED
DESIGN	A. Priley	J. Hermstad
DETAILS	K. Michalski	J. Hermstad
QUANTITIES	A. Priley	J. Wong

PREPARED FOR THE STATE OF CALIFORNIA DEPARTMENT OF TRANSPORTATION

A. Priley
PROJECT ENGINEER

BRIDGE NO. 55-1099
POST MILE 22.64

SEAL BEACH BLVD OC (REPLACE)
GIRDER REINFORCEMENT NO. 2

DESIGN DETAIL SHEET (ENGLISH) (REV. 2/25/05)

ORIGINAL SCALE IN INCHES FOR REDUCED PLANS 0 1 2 3

CU 12235
EA 071631

DISREGARD PRINTS BEARING EARLIER REVISION DATES → REVISION DATES (PRELIMINARY STAGE ONLY) ~~09/17/08~~ ~~04/06/09~~ 07/27/09

SHEET 30 OF 45

FILE => 55-1099-o-grf02.dgn

USERNAME => trlenard DATE PLOTTED => 04-FEB-2010 TIME PLOTTED => 06:18

DIST	COUNTY	ROUTE	POST MILES TOTAL PROJECT	SHEET No	TOTAL SHEETS
12	Ora	22,405, 605	R0.3/R0.9, 22.3/24.0,3.0/R1.6	1689	1929

REGISTERED CIVIL ENGINEER 07-27-09 DATE

2-1-10
PLANS APPROVAL DATE

REGISTERED PROFESSIONAL ENGINEER A. Priley No. C 73375 Exp. 12-31-10 CIVIL STATE OF CALIFORNIA

The State of California or its officers or agents shall not be responsible for the accuracy or completeness of electronic copies of this plan sheet.

OCTA
550 SOUTH MAIN STREET
ORANGE, CA 92863

TRC
21 TECHNOLOGY DR
IRVINE, CA 92618

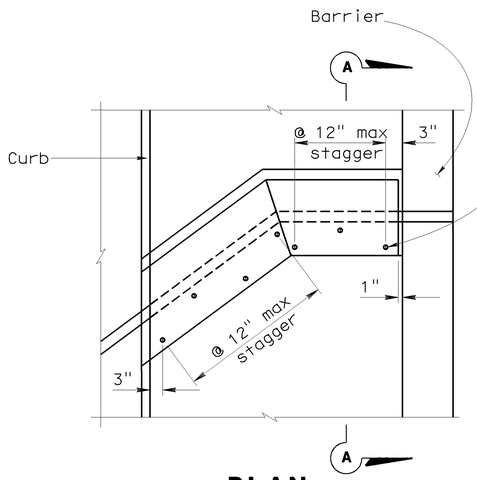

PLAN

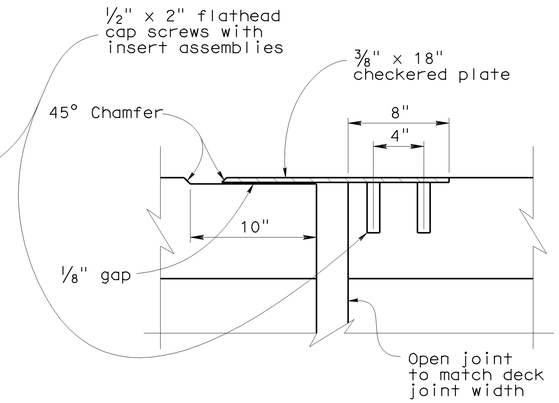

SECTION A-A

SIDEWALK EXPANSION JOINT ARMOR DETAILS

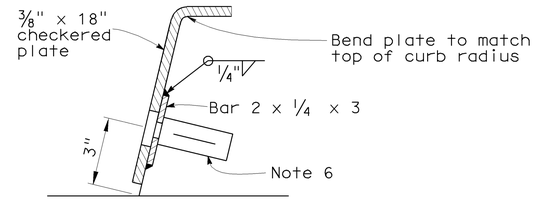

SECTION E-E

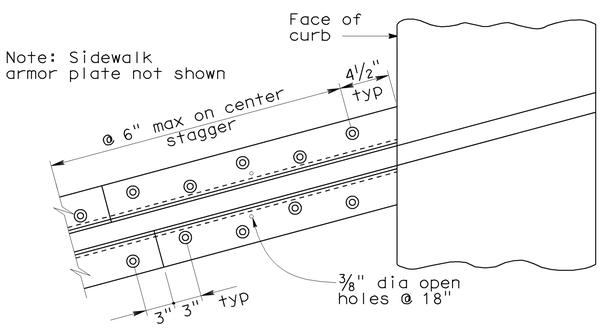

PLAN BOLT & PLATE LAYOUT

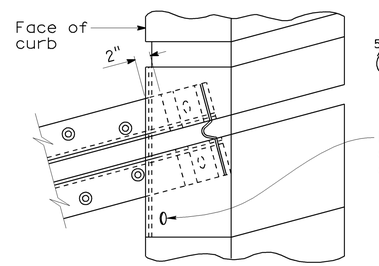

VIEW B-B

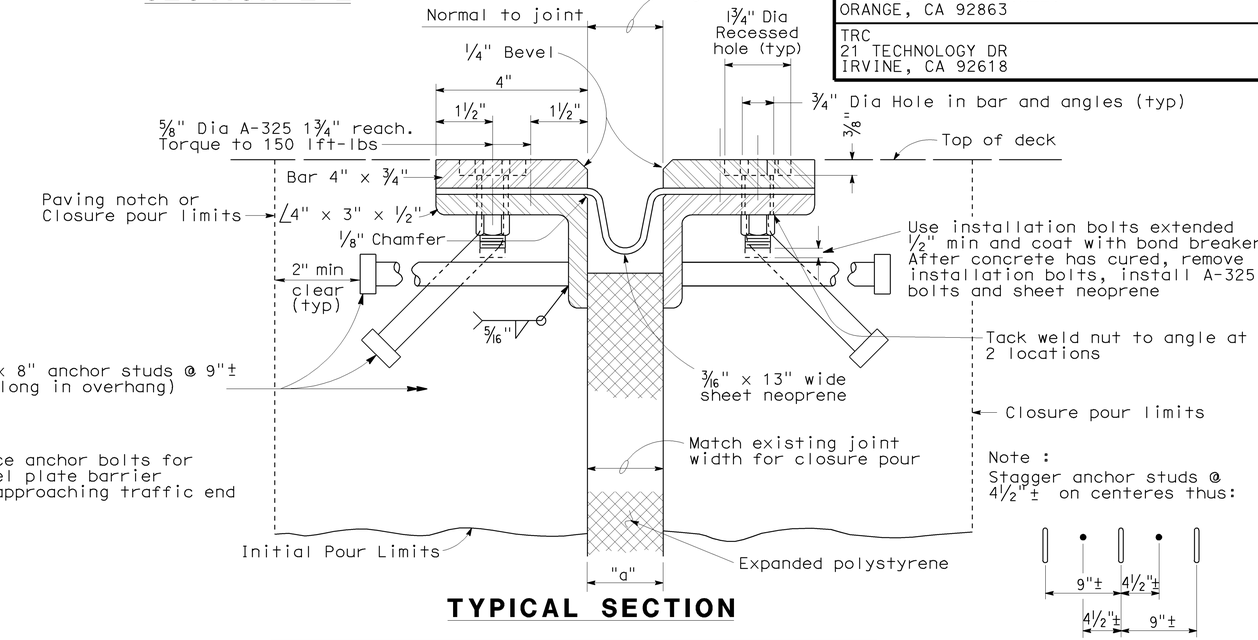

TYPICAL SECTION

Joint Information			"a" Dimensions		
Location	Movement Rating (MR)	Skew	Winter	Spring & Fall	Summer
Abut 1	3 1/2"	36°30'23"	2"	1 1/2"	1"
Abut 3	3"	36°30'23"	1 3/4"	1 1/4"	1"

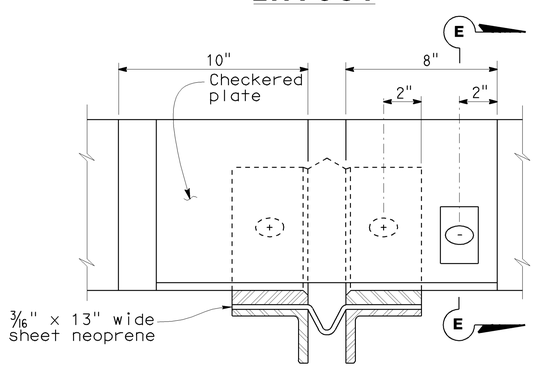

VIEW C-C

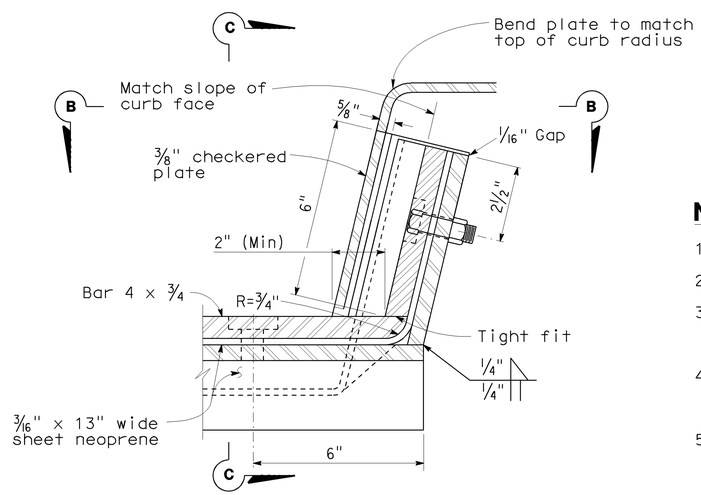

SIDEWALK DETAIL

NOTES

1. Full penetration butt welds may be substituted for fillet welds on all anchor studs
2. Alternate types of anchor studs may be permitted subject to the approval by the Engineer
3. Joint seal assembly to be used in conjunction with closure pour. (See other sheets for limiits). Closure pour shall not be placed until final deck surface is within tolerance specified
4. Use joint at crown of roadway, at any change in transverse slope in deck and at changes in horizontal direction. Place other joints at or near lanes. All metal parts to be painted or galvanized after fabrication
5. Sheet neoprene shall be fabricated in one continuous piece or joints shall be vulcanized. Neoprene shall be fabricated to bend around corners. 1" holes in neoprene sheets shall be drilled or punched so that the neoprene is not distorted at the time of installation
6. Insert assembly or expansion anchorage for 5/8" x 1 3/4" A-325 bolt

Sudhakar Vatti
DESIGN OVERSIGHT Sudhakar Vatti
8-10-09
SIGN OFF DATE

	BY	CHECKED
DESIGN	A. Priley	J. Hermstad
DETAILS	K. Michalski	J. Hermstad
QUANTITIES	A. Priley	J. Wong

PREPARED FOR THE STATE OF CALIFORNIA DEPARTMENT OF TRANSPORTATION

A. Priley
PROJECT ENGINEER

BRIDGE NO. 55-1099
POST MILE 22.64

SEAL BEACH BLVD OC (REPLACE)
JOINT SEAL ASSEMBLY

DESIGN DETAIL SHEET (ENGLISH) (REV. 2/25/05)

ORIGINAL SCALE IN INCHES FOR REDUCED PLANS 0 1 2 3

CU 12235
EA 071631

DISREGARD PRINTS BEARING EARLIER REVISION DATES

REVISION DATES (PRELIMINARY STAGE ONLY) 09/17/08 04/06/09 07/21/09

SHEET 31 OF 45

FILE => 55-1099-q-jtsa01.dgn

USERNAME => rfrlenord DATE PLOTTED => 04-FEB-2010 TIME PLOTTED => 06:18

DIST	COUNTY	ROUTE	POST MILES TOTAL PROJECT	SHEET No	TOTAL SHEETS
12	Ora	22,405, 605	R0.3/R0.9, 22.3/24.0,3.0/R1.6	1690	1929

REGISTERED CIVIL ENGINEER 07-27-09 DATE

2-1-10
PLANS APPROVAL DATE

REGISTERED PROFESSIONAL ENGINEER A. Priley No. C 73375 Exp. 12-31-10 CIVIL STATE OF CALIFORNIA

The State of California or its officers or agents shall not be responsible for the accuracy or completeness of electronic copies of this plan sheet.

OCTA
550 SOUTH MAIN STREET
ORANGE, CA 92863

TRC
21 TECHNOLOGY DR
IRVINE, CA 92618

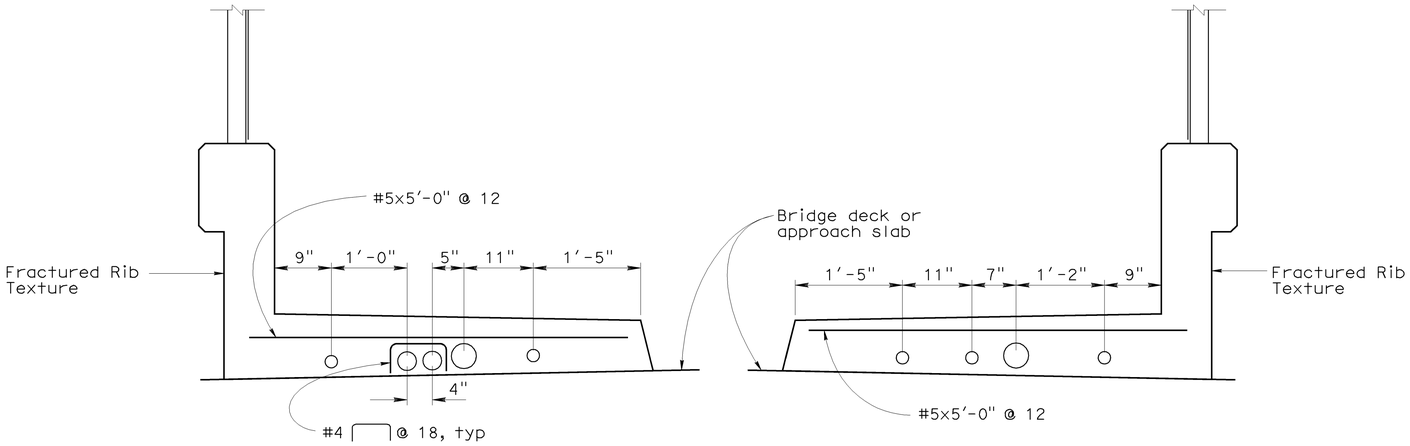

STAGE 1 **STAGE 2**

CONCRETE BARRIER (TYPE 26 MOD)

No scale

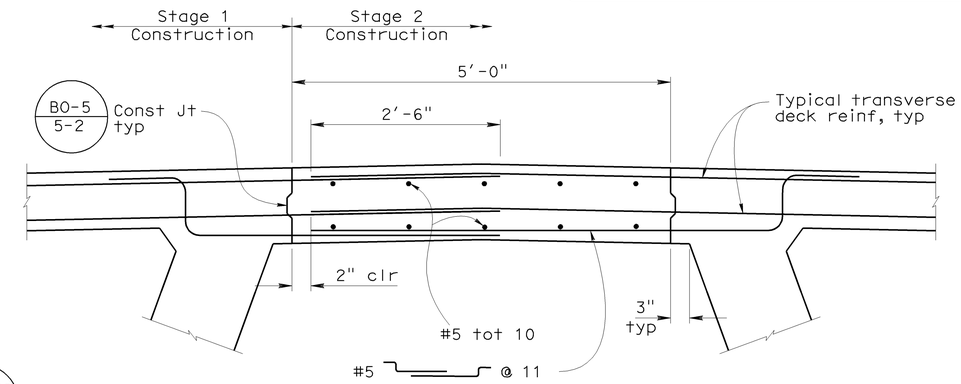

CLOSURE POUR DETAIL

1" = 1'-0"
(Not all reinforcement shown)

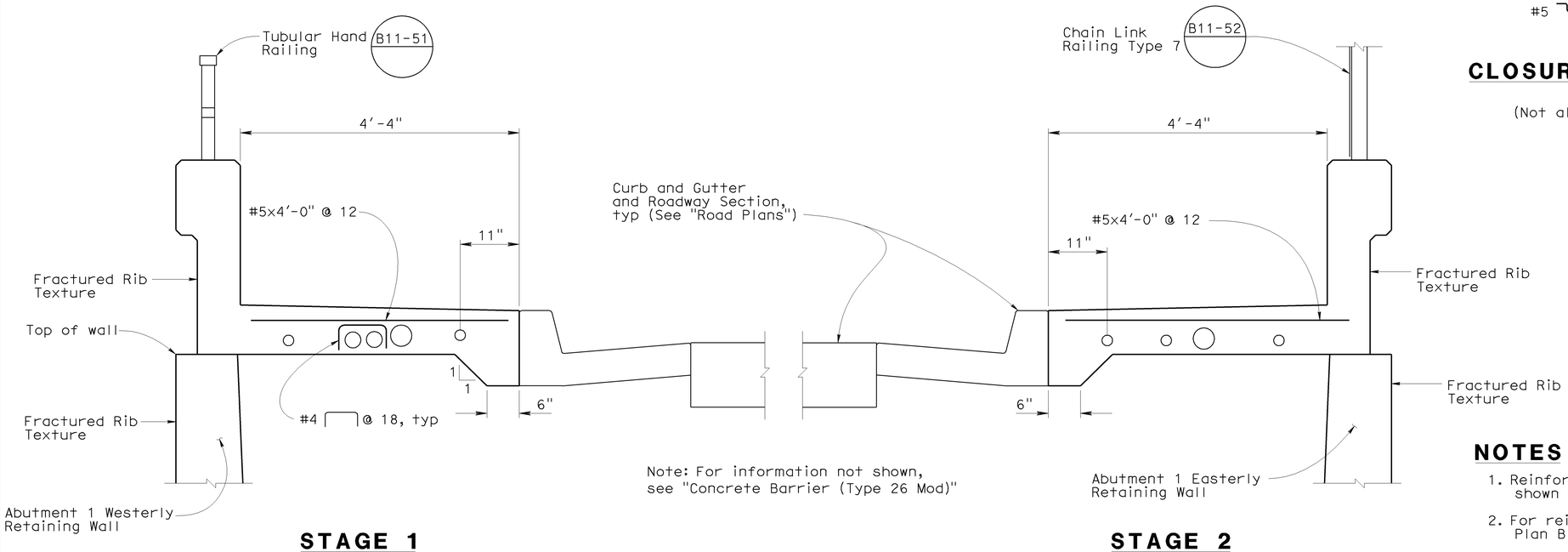

Note: For information not shown, see "Concrete Barrier (Type 26 Mod)"

STAGE 1 **STAGE 2**

CONCRETE BARRIER (TYPE 26A MOD)

No scale

NOTES

1. Reinforcement called out in barrier is in addition to that shown on Standard Plan B11-54
2. For reinforcement and details not shown, see Standard Plan B11-54
3. For fractured rib texture and details, see "Architectural Details No. 2" sheet
4. No additional future utility openings are required in the barrier

Sudhakar Vatti
DESIGN OVERSIGHT Sudhakar Vatti
8-10-09
SIGN OFF DATE

	BY	CHECKED
DESIGN	A. Priley	J. Hermstad
DETAILS	K. Michalski	J. Hermstad
QUANTITIES	A. Priley	J. Wong

PREPARED FOR THE STATE OF CALIFORNIA DEPARTMENT OF TRANSPORTATION

A. Priley
PROJECT ENGINEER

BRIDGE NO. 55-1099
POST MILE 22.64

SEAL BEACH BLVD OC (REPLACE)
MISCELLANEOUS DETAILS

DESIGN DETAIL SHEET (ENGLISH) (REV. 2/25/05)

ORIGINAL SCALE IN INCHES FOR REDUCED PLANS 0 1 2 3

CU 12235
EA 071631

DISREGARD PRINTS BEARING EARLIER REVISION DATES → 09/17/08 04/06/09 07/27/09

REVISION DATES (PRELIMINARY STAGE ONLY)

SHEET 32 OF 45

FILE => 55-1099-r-miscdt01.dgn

USERNAME => trlenard DATE PLOTTED => 04-FEB-2010 TIME PLOTTED => 06:18

DIST	COUNTY	ROUTE	POST MILES TOTAL PROJECT	SHEET No	TOTAL SHEETS
12	Ora	22, 405, 605	R0.3/R0.9, 22.3/24.0,3.0/R1.6	1691	1929

LICENSED LANDSCAPE ARCHITECT

2-1-10
PLANS APPROVAL DATE

LICENSED LANDSCAPE ARCHITECT CATHY L. JOHNSON NO. 4545 01-31-10 Renewal Date 07-27-09 Date STATE OF CALIFORNIA

The State of California or its officers or agents shall not be responsible for the accuracy or completeness of electronic copies of this plan sheet.

OCTA
550 SOUTH MAIN STREET
ORANGE, CA 92863

RBF CONSULTING
14725 ALTON PARKWAY
IRVINE, CA 92618

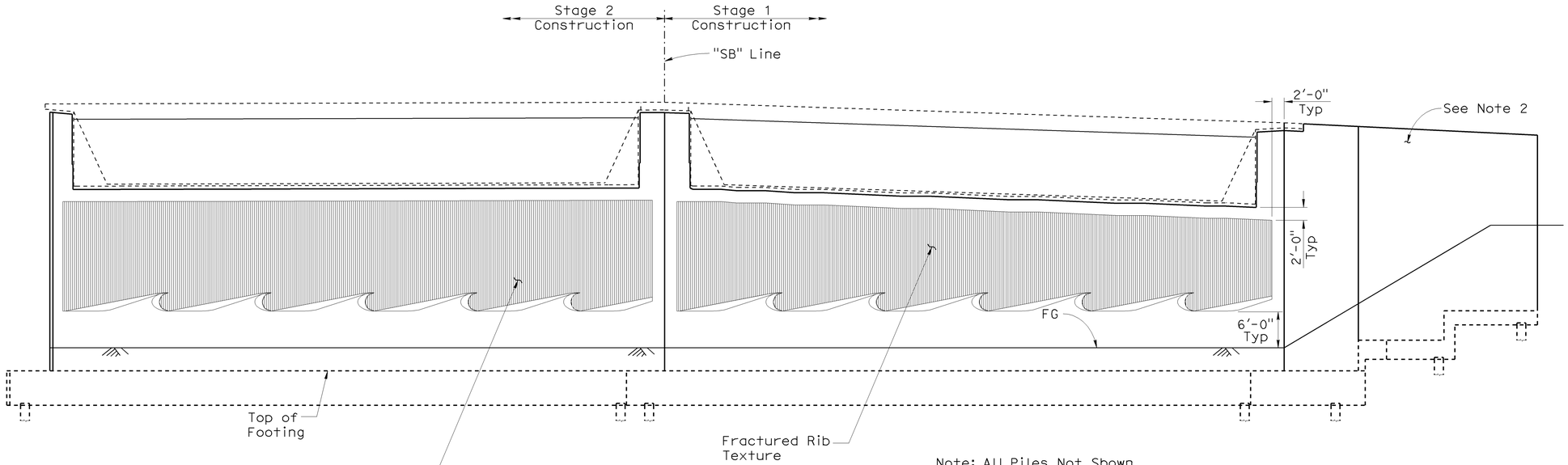

Note: All Piles Not Shown

ARCHITECTURAL TEXTURE
ABUTMENT 1 ELEVATION

1/8"= 1'-0"

NOTES

1. For Fractured Rib Texture detail, See "Architectural Details No. 2" Sheet
2. For Retaining Wall Architectural Texture, See "Architectural Details No. 3" Sheet

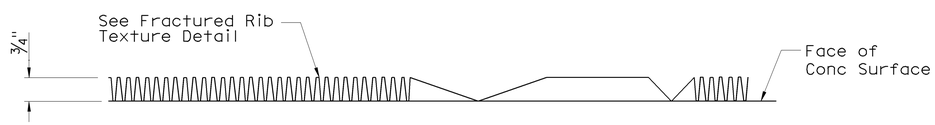

SECTION A-A

1W:10H

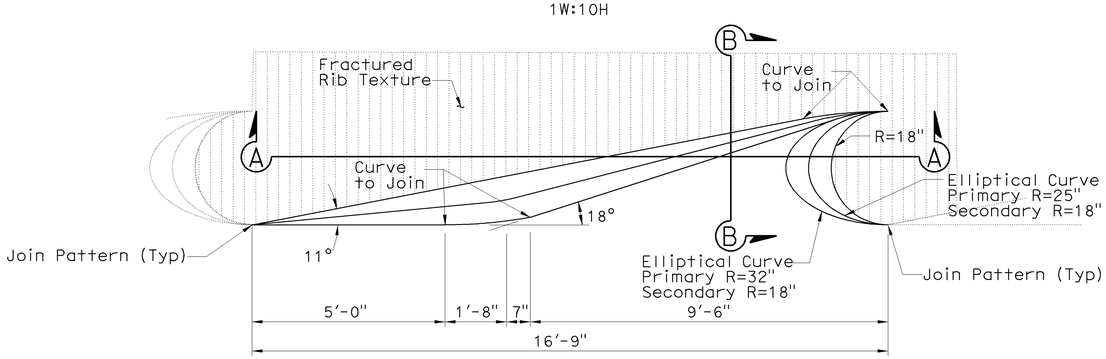

ELEVATION

No Scale

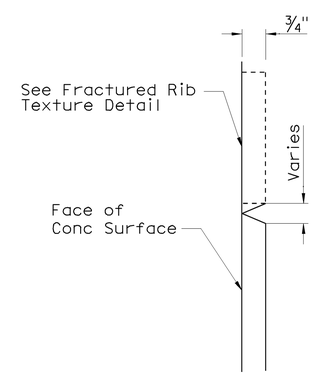

SECTION B-B

10W:1H

Sudhakar Vatti
DESIGN OVERSIGHT Sudhakar Vatti
8-10-09
SIGN OFF DATE

	BY	CHECKED
DESIGN	C. JOHNSON	A. SU
DETAILS	R. KELCHER	A. SU
QUANTITIES	A. PRILEY	J. WONG

PREPARED FOR THE STATE OF CALIFORNIA DEPARTMENT OF TRANSPORTATION

A. PRILEY
PROJECT ENGINEER

BRIDGE NO. 55-1099
POST MILE 22.64

SEAL BEACH BLVD OC (REPLACE)
ARCHITECTURAL DETAILS NO. 1

DESIGN DETAIL SHEET (ENGLISH) (REV. 2/25/05)

ORIGINAL SCALE IN INCHES FOR REDUCED PLANS 0 1 2 3

CU 12235
EA 071631

DISREGARD PRINTS BEARING EARLIER REVISION DATES

REVISION DATES (PRELIMINARY STAGE ONLY) 04/06/09 07/21/09

SHEET 33 OF 45

FILE => 55-1099-s-arch01.dgn

USERNAME => trhenard DATE PLOTTED => 04-FEB-2010 TIME PLOTTED => 06:18

DIST	COUNTY	ROUTE	POST MILES TOTAL PROJECT	SHEET No	TOTAL SHEETS
12	Ora	22, 405, 605	R0.3/R0.9, 22.3/24.0,3.0/R1.6	1692	1929

LICENSED LANDSCAPE ARCHITECT

2-1-10
PLANS APPROVAL DATE

LICENSED LANDSCAPE ARCHITECT
CATHY L. JOHNSON
NO. 4545
01-31-10
Renewal Date
07-27-09
Date
STATE OF CALIFORNIA

The State of California or its officers or agents shall not be responsible for the accuracy or completeness of electronic copies of this plan sheet.

OCTA
550 SOUTH MAIN STREET
ORANGE, CA 92863

RBF CONSULTING
14725 ALTON PARKWAY
IRVINE, CA 92618

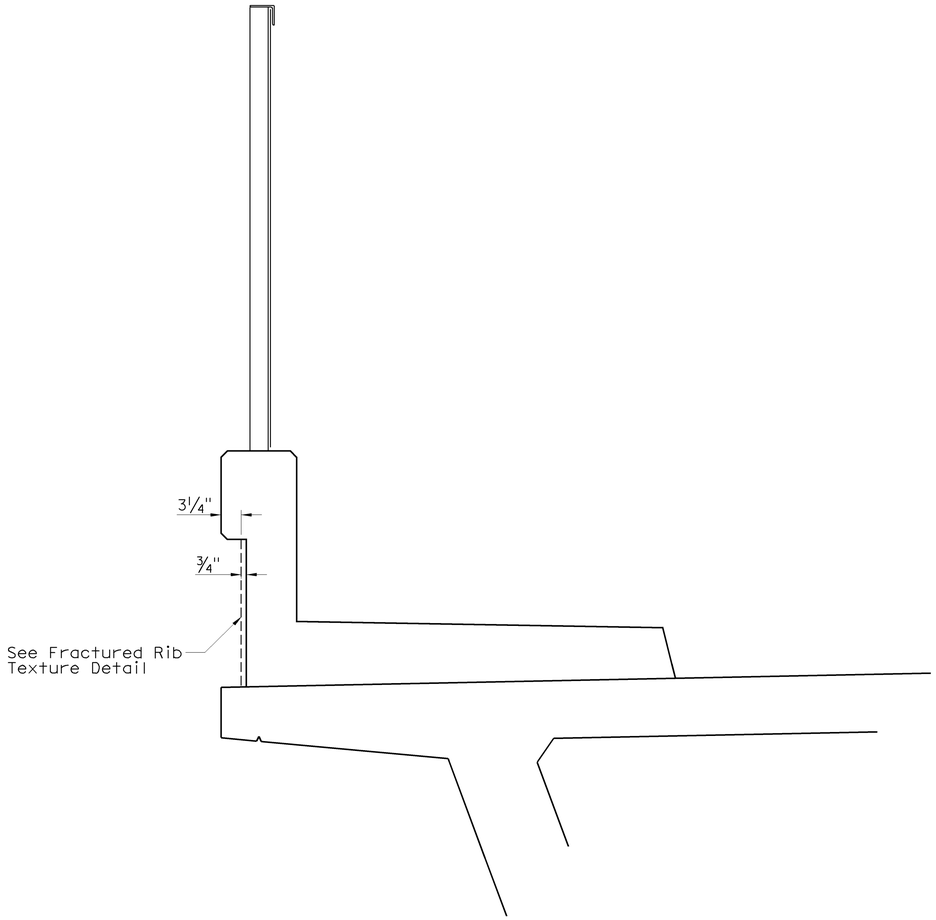

CONCRETE BARRIER (TYPE 26 MOD)

SCALE: 1"=1'-0"

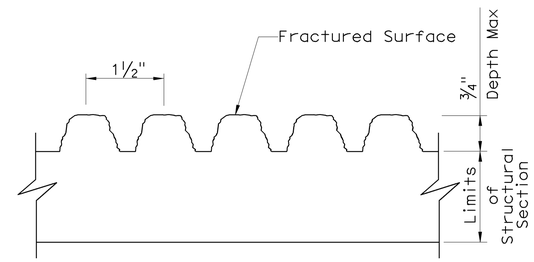

FRACTURED RIB TEXTURE

No Scale

Sudhakar Vatti
DESIGN OVERSIGHT Sudhakar Vatti
8-10-09
SIGN OFF DATE

	BY	CHECKED
DESIGN	C. JOHNSON	A. SU
DETAILS	R. KELCHER	A. SU
QUANTITIES	A. PRILEY	J. WONG

PREPARED FOR THE STATE OF CALIFORNIA DEPARTMENT OF TRANSPORTATION

A. PRILEY
PROJECT ENGINEER

BRIDGE NO. 55-1099
POST MILE 22.64

SEAL BEACH BLVD OC (REPLACE)
ARCHITECTURAL DETAILS NO. 2

DESIGN DETAIL SHEET (ENGLISH) (REV. 2/25/05)

ORIGINAL SCALE IN INCHES FOR REDUCED PLANS 0 1 2 3

CU 12235
EA 071631

DISREGARD PRINTS BEARING EARLIER REVISION DATES

REVISION DATES (PRELIMINARY STAGE ONLY) 04/06/09 07/27/09

SHEET 34 OF 45

FILE => 55-1099-s-arch02.dgn

USERNAME => friehord DATE PLOTTED => 04-FEB-2010 TIME PLOTTED => 06:18

DIST	COUNTY	ROUTE	POST MILES TOTAL PROJECT	SHEET No	TOTAL SHEETS
12	Ora	22,405, 605	R0.3/R0.9, 22.3/24.0,3.0/R1.6	1693	1929

REGISTERED CIVIL ENGINEER 07-27-09 DATE

2-1-10
PLANS APPROVAL DATE

REGISTERED PROFESSIONAL ENGINEER A. Priley No. C 73375 Exp. 12-31-10 CIVIL STATE OF CALIFORNIA

The State of California or its officers or agents shall not be responsible for the accuracy or completeness of electronic copies of this plan sheet.

OCTA
550 SOUTH MAIN STREET
ORANGE, CA 92863

TRC
21 TECHNOLOGY DR
IRVINE, CA 92618

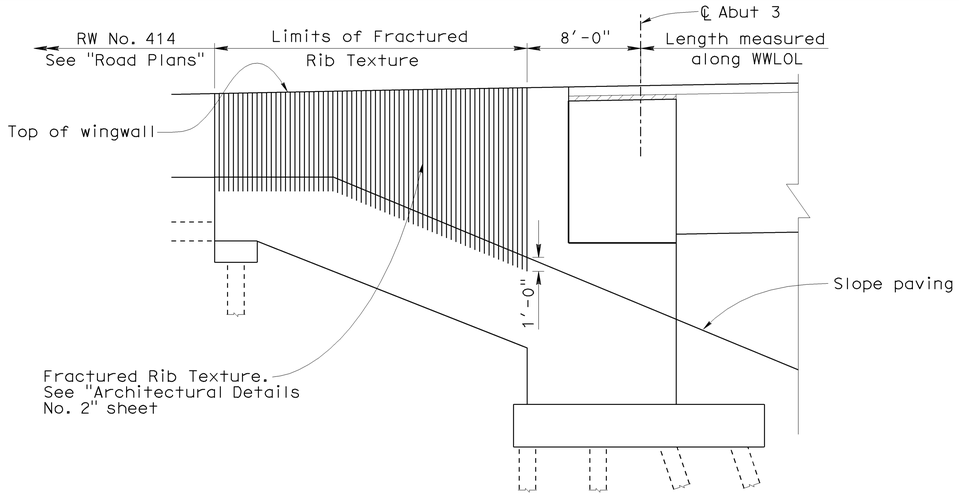

ABUTMENT 3 - WESTERLY WINGWALL

3/16" = 1'-0"

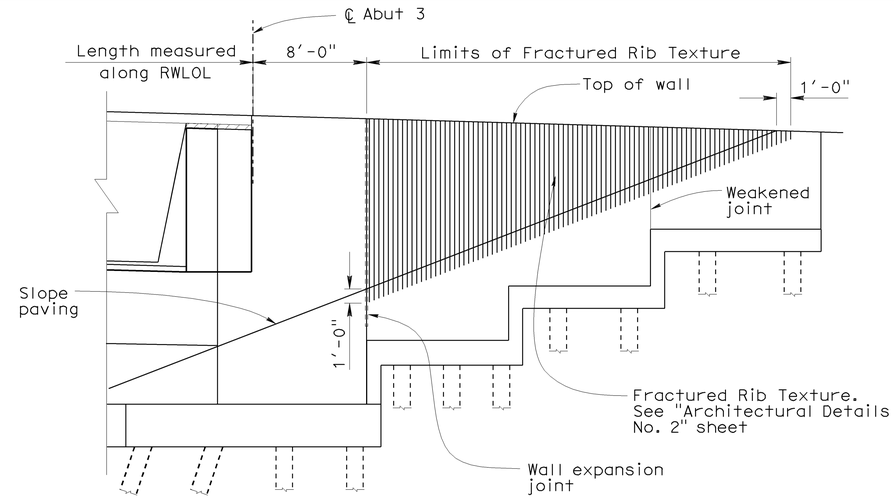

ABUTMENT 3 - EASTERLY RETAINING WALL

3/16" = 1'-0"

NOTES

1. Barrier not shown

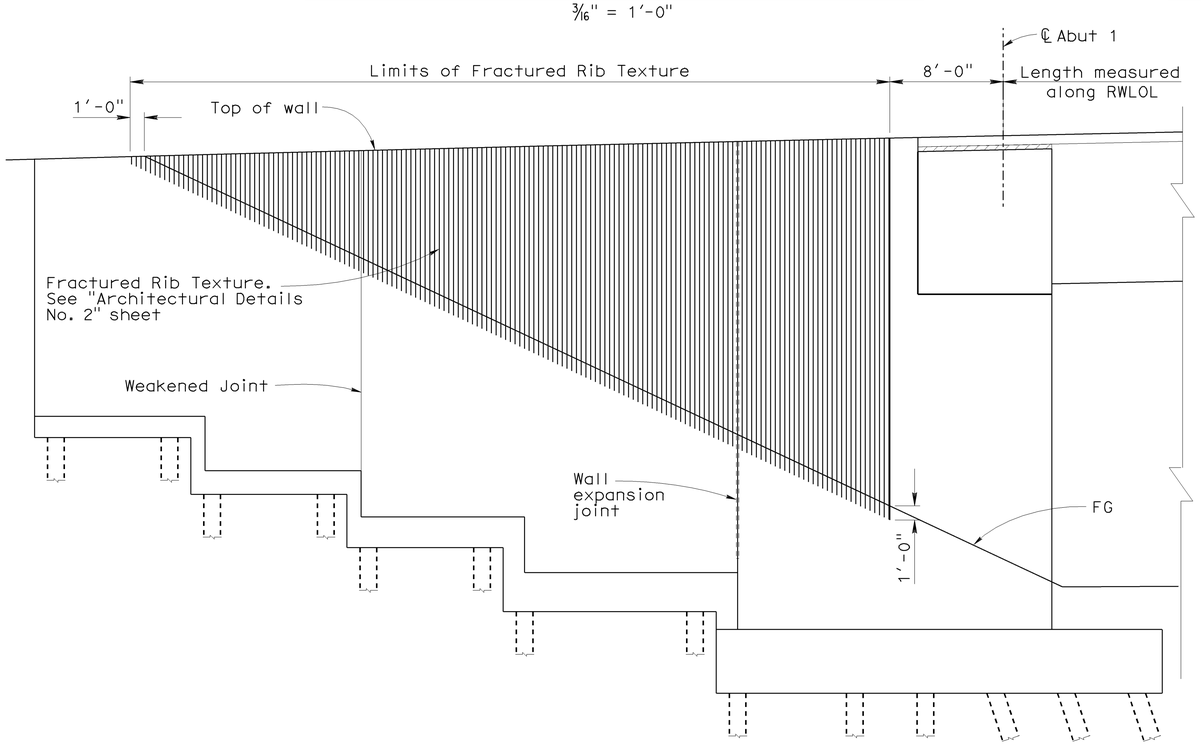

ABUTMENT 1 - EASTERLY RETAINING WALL

3/16" = 1'-0"

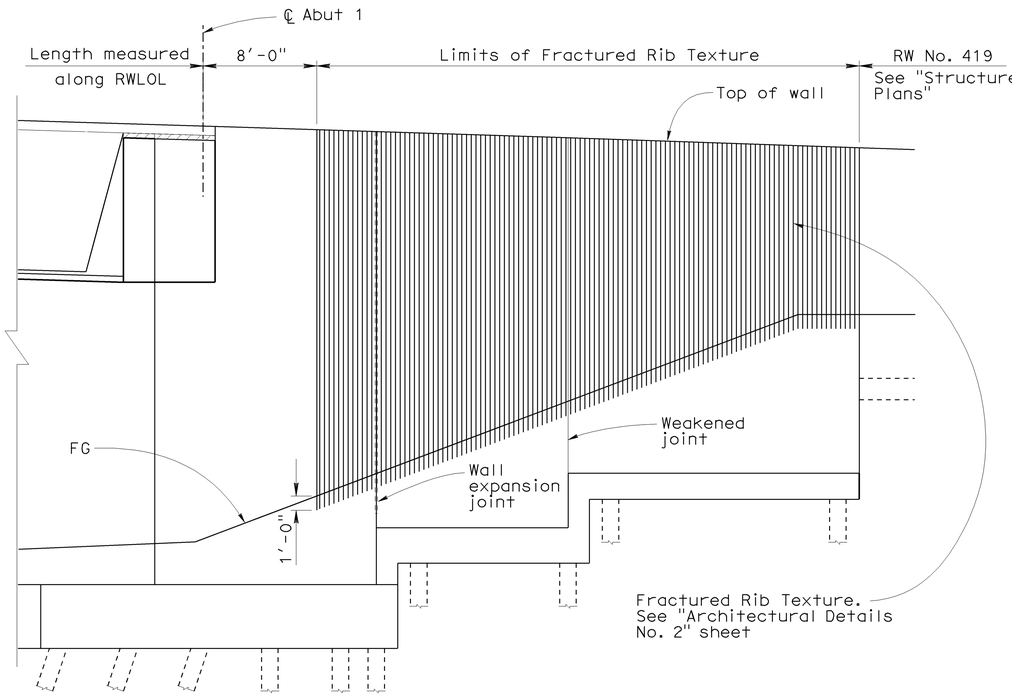

ABUTMENT 1 - WESTERLY RETAINING WALL

3/16" = 1'-0"

Sudhakar Vatti
DESIGN OVERSIGHT Sudhakar Vatti
8-10-09
SIGN OFF DATE

	BY	CHECKED
DESIGN	A. Priley	J. Hermstad
DETAILS	K. Michalski	J. Hermstad
QUANTITIES	A. Priley	J. Wong

PREPARED FOR THE STATE OF CALIFORNIA DEPARTMENT OF TRANSPORTATION

A. Priley
PROJECT ENGINEER

BRIDGE NO. 55-1099
POST MILE 22.64

SEAL BEACH BLVD OC (REPLACE)
ARCHITECTURAL DETAILS NO. 3

DESIGN DETAIL SHEET (ENGLISH) (REV. 2/25/05)

ORIGINAL SCALE IN INCHES FOR REDUCED PLANS 0 1 2 3

CU 12235
EA 071631

DISREGARD PRINTS BEARING EARLIER REVISION DATES

REVISION DATES (PRELIMINARY STAGE ONLY) 09/17/08 04/06/09 07/27/09

SHEET 35 OF 45

FILE => 55-1099-s-arch03.dgn

USERNAME => trlenard DATE PLOTTED => 04-FEB-2010 TIME PLOTTED => 06:13

RELEASED 7-9-03

DIST	COUNTY	ROUTE	POST MILES TOTAL PROJECT	SHEET No	TOTAL SHEETS
12	Ora	22,405, 605	R0.3/R0.9, 22.3/24.0,3.0/R1.6	1694	1929

REGISTERED CIVIL ENGINEER 07-27-09 DATE

2-1-10
PLANS APPROVAL DATE

REGISTERED PROFESSIONAL ENGINEER A. Priley No. C 73375 Exp. 12-31-10 CIVIL STATE OF CALIFORNIA

The State of California or its officers or agents shall not be responsible for the accuracy or completeness of electronic copies of this plan sheet.

OCTA
550 SOUTH MAIN STREET
ORANGE, CA 92863

TRC
21 TECHNOLOGY DR
IRVINE, CA 92618

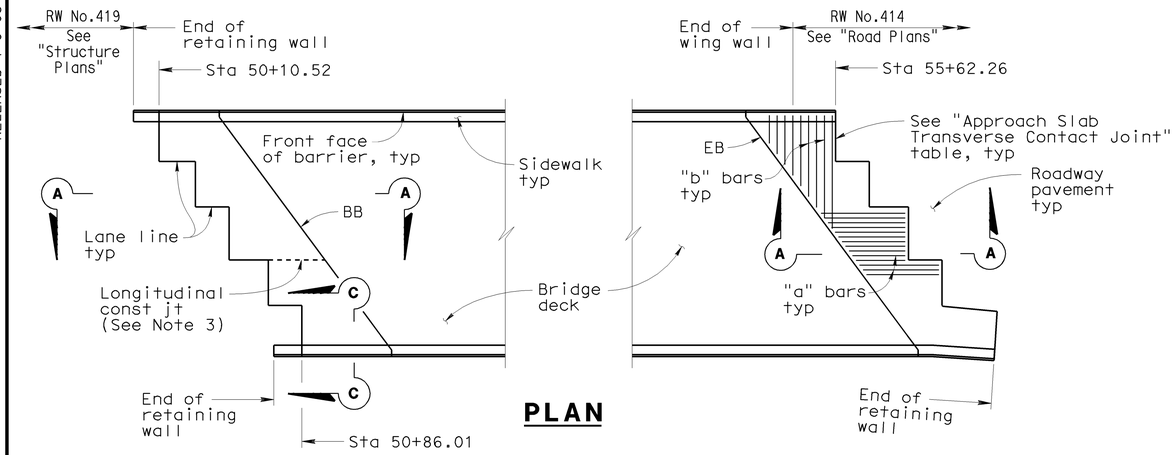

PLAN

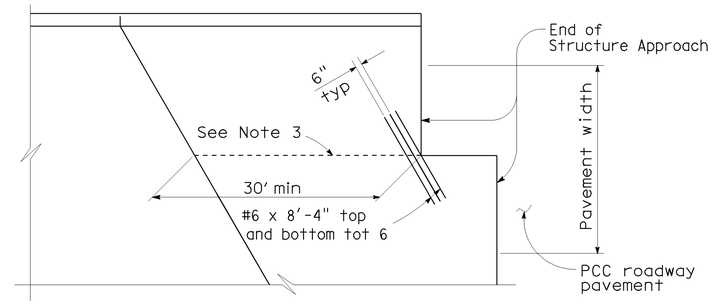

STRUCTURE APPROACH - END STAGGER DETAIL

NOTES:

1. For details not shown, see Structure Plans. For MR $\leq$ 2", adjust bar reinforcement to clear a sawcut for sealed joint, when required.
2. For drainage details, see "Structure Approach Drainage Details" sheet.
3. Longitudinal construction joints, when permitted by the Engineer, shall be located on lane lines.
4. End angle or plate at beginning of barrier transition, end of wingwall or end of structure approach as applicable.
5. For transverse contact joint with new PCC paving, refer to Standard Plan P1 and P10.
6. At the contractor's option, approach slab transverse reinforcement may be placed parallel to paving notch. Spacing of transverse reinforcement is measured along ℄ roadway.

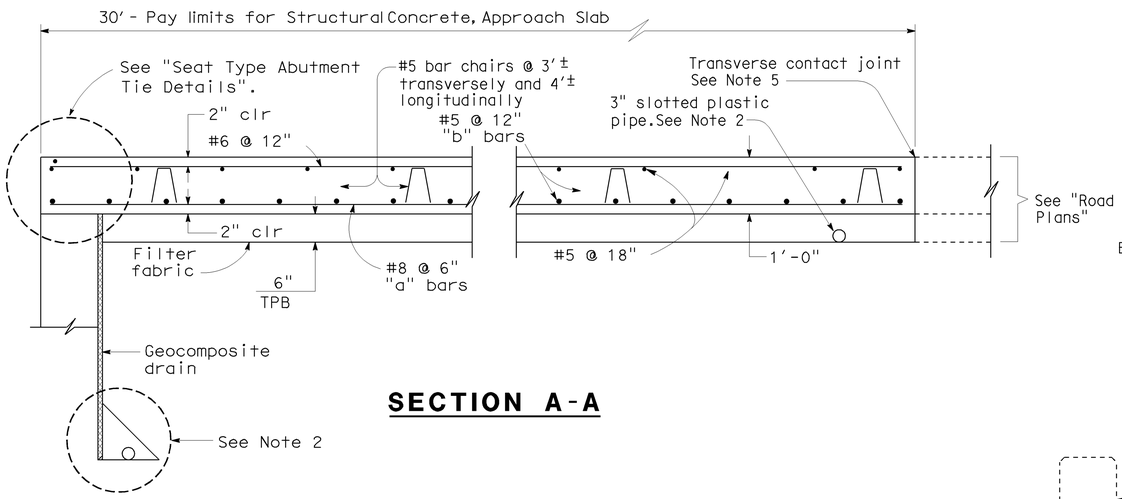

SECTION A-A

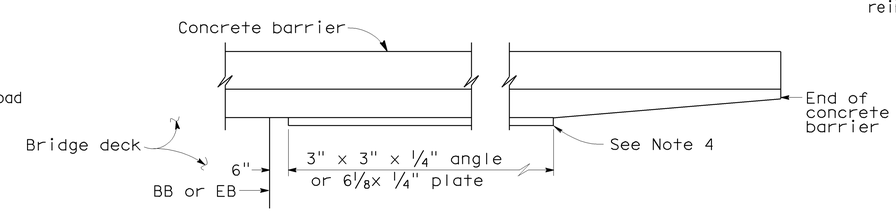

EDGE ANGLE DETAIL

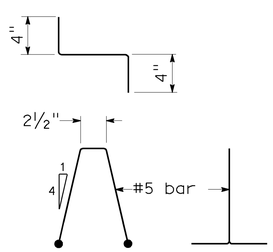

BAR CHAIR DETAIL

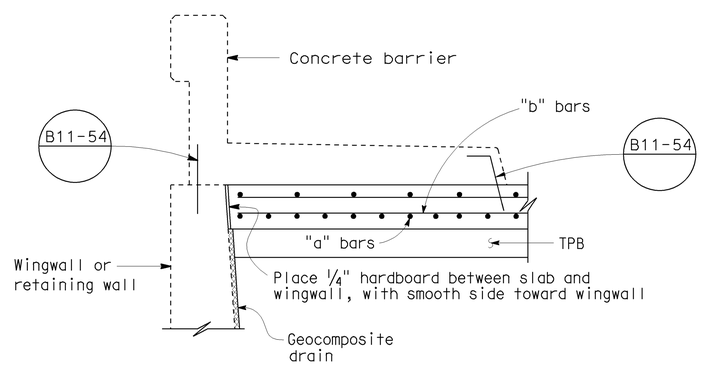

SECTION C-C

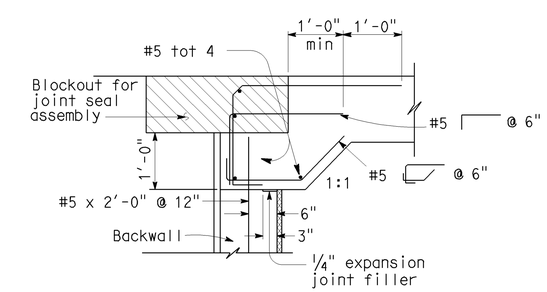

MR > 2"

SEAT TYPE ABUTMENT TIE DETAILS (SEE NOTE 1)

Sudhakar Vatti
DESIGN OVERSIGHT Sudhakar Vatti
8-10-09
SIGN OFF DATE

	BY	CHECKED
DESIGN	A. Priley	J. Hermstad
DETAILS	K. Michalski	J. Hermstad
QUANTITIES	A. Priley	J. Wong

PREPARED FOR THE STATE OF CALIFORNIA DEPARTMENT OF TRANSPORTATION

A. Priley
PROJECT ENGINEER

BRIDGE NO. 55-1099
POST MILE 22.64

SEAL BEACH BLVD OC (REPLACE)
STRUCTURE APPROACH TYPE N(30S)

DESIGN DETAIL SHEET (ENGLISH) (REV. 2/25/05)

ORIGINAL SCALE IN INCHES FOR REDUCED PLANS 0 1 2 3

CU 12235
EA 071631

DISREGARD PRINTS BEARING EARLIER REVISION DATES

REVISION DATES (PRELIMINARY STAGE ONLY) 09/17/08 04/06/09 07/27/09

SHEET 36 OF 45

FILE => 55-1099-s-sadt01.dgn

USERNAME => friehard DATE PLOTTED => 04-FEB-2010 TIME PLOTTED => 06:19

DIST	COUNTY	ROUTE	POST MILES TOTAL PROJECT	SHEET No	TOTAL SHEETS
12	Ora	22,405, 605	R0.3/R0.9, 22.3/24.0,3.0/R1.6	1695	1929

REGISTERED CIVIL ENGINEER 07-27-09 DATE

2-1-10
PLANS APPROVAL DATE

REGISTERED PROFESSIONAL ENGINEER A. Priley No. C 73375 Exp. 12-31-10 CIVIL STATE OF CALIFORNIA

The State of California or its officers or agents shall not be responsible for the accuracy or completeness of electronic copies of this plan sheet.

OCTA
550 SOUTH MAIN STREET
ORANGE, CA 92863

TRC
21 TECHNOLOGY DR
IRVINE, CA 92618

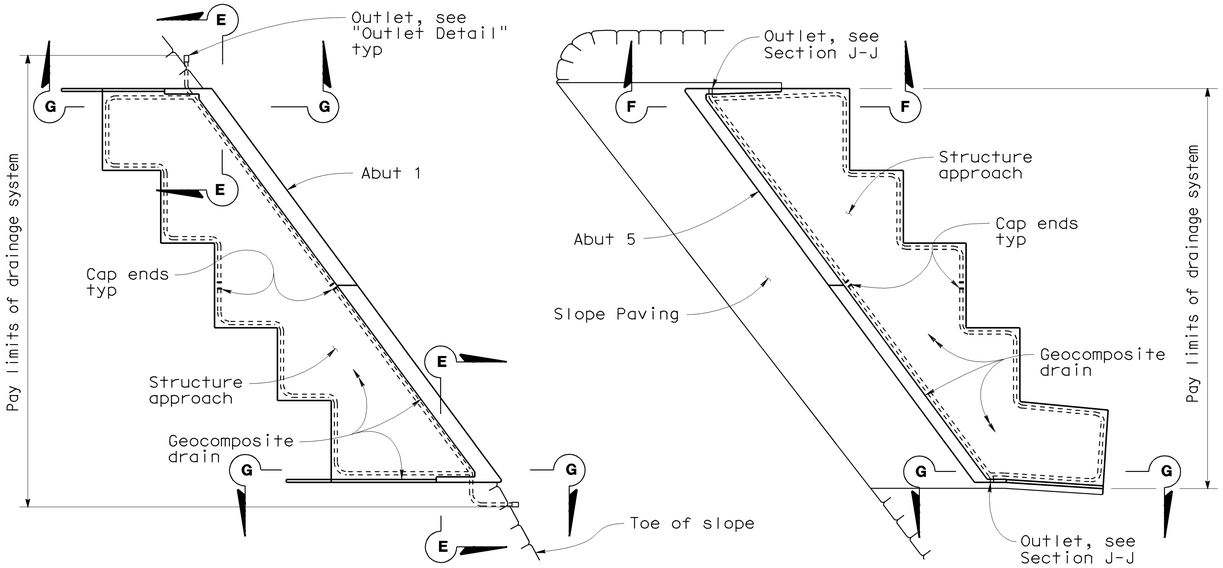

TYPICAL PLAN

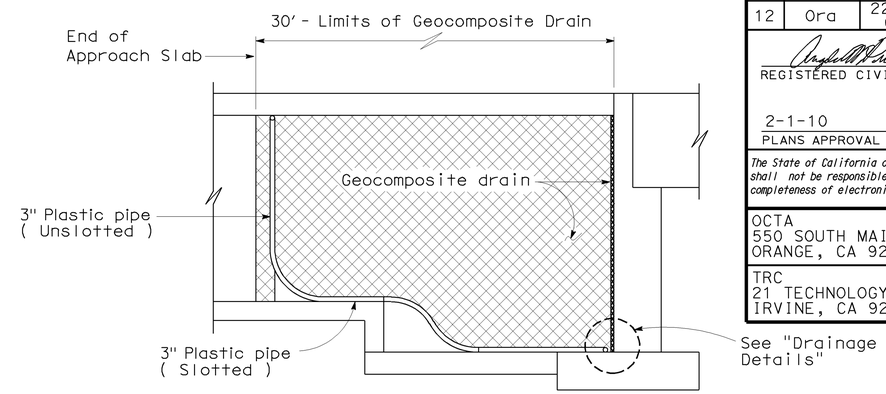

SECTION G-G

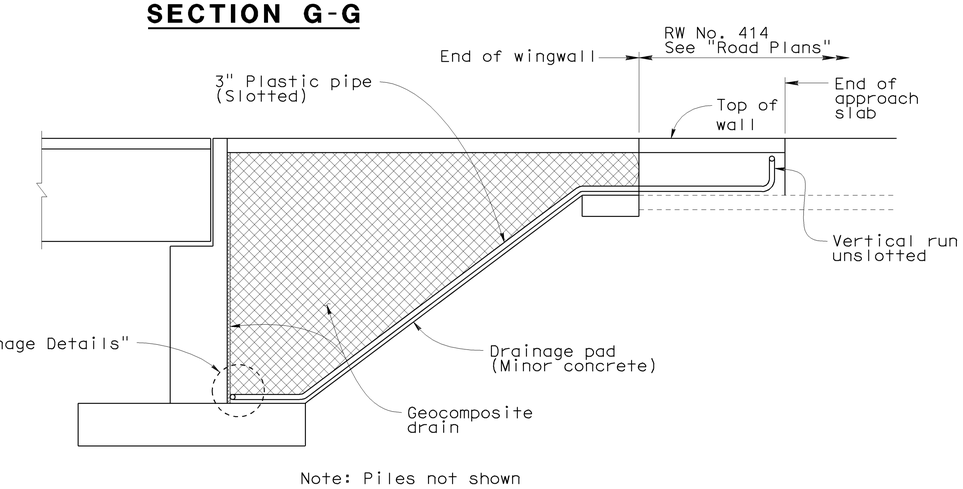

SECTION F-F

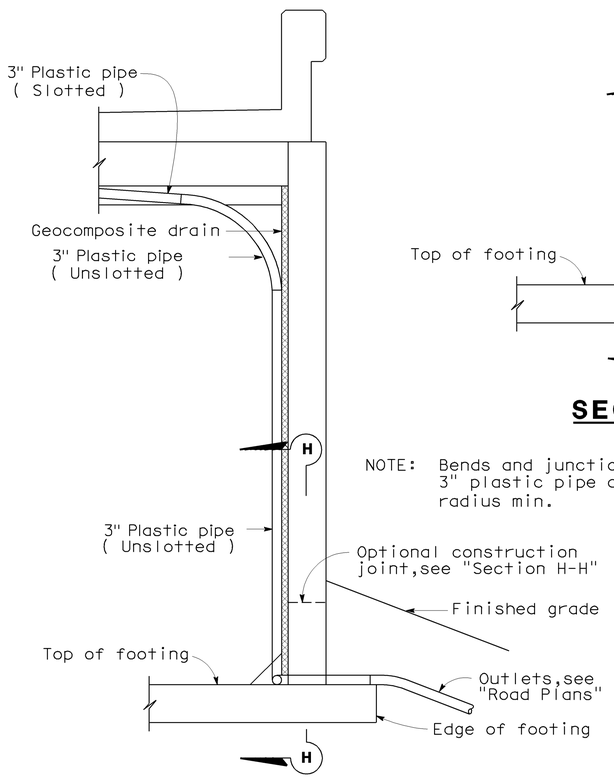

NOTE: Bends and junctions in 3" plastic pipe are 2'-6" radius min.

SECTION E-E

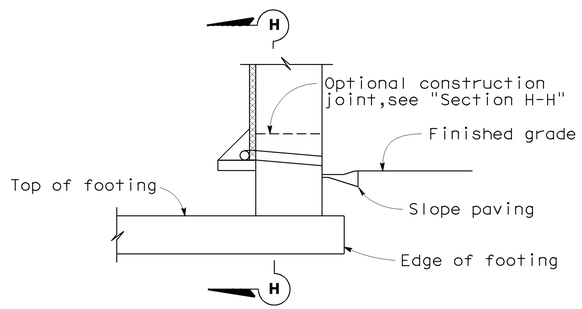

SECTION J-J

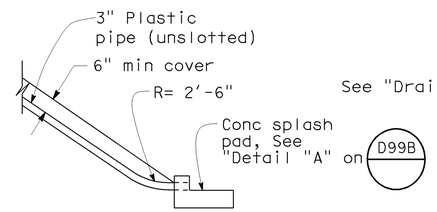

OUTLET DETAIL

NO SCALE

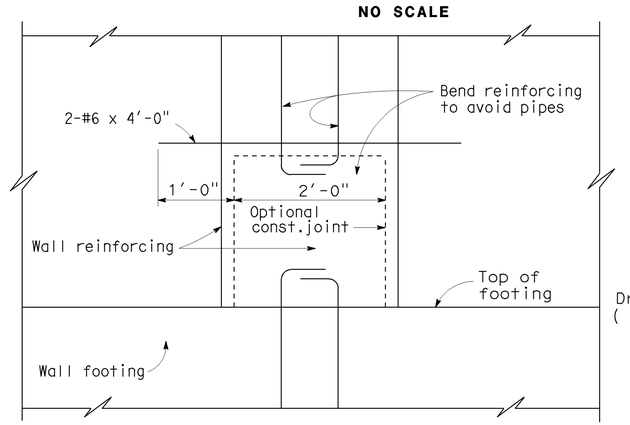

SECTION H-H

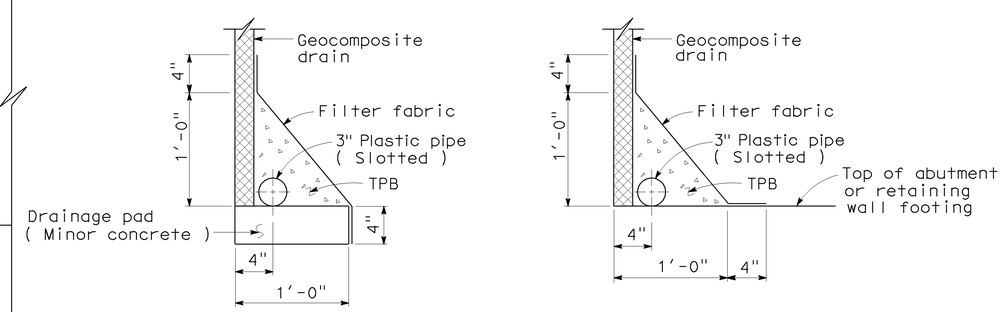

WITHOUT FOOTING

WITH FOOTING

DRAINAGE DETAILS

Sudhakar Vatti
DESIGN OVERSIGHT Sudhakar Vatti

8-10-09
SIGN OFF DATE

	BY	CHECKED
DESIGN	A. Priley	J. Hermstad
DETAILS	K. Michalski	J. Hermstad
QUANTITIES	A. Priley	J. Wong

PREPARED FOR THE STATE OF CALIFORNIA DEPARTMENT OF TRANSPORTATION

A. Priley
PROJECT ENGINEER

BRIDGE NO. 55-1099
POST MILE 22.64

SEAL BEACH BLVD OC (REPLACE)
STRUCTURE APPROACH DRAINAGE DETAILS

DESIGN DETAIL SHEET (ENGLISH) (REV. 2/25/05)

ORIGINAL SCALE IN INCHES FOR REDUCED PLANS 0 1 2 3

CU 12235
EA 071631

DISREGARD PRINTS BEARING EARLIER REVISION DATES 09/17/08 04/06/09 07/27/09

REVISION DATES (PRELIMINARY STAGE ONLY)

SHEET 37 OF 45

FILE => 55-1099-s-sadt02.dgn

USERNAME => trlenard DATE PLOTTED => 04-FEB-2010 TIME PLOTTED => 06:19

DIST	COUNTY	ROUTE	POST MILES TOTAL PROJECT	SHEET No	TOTAL SHEETS
12	Ora	22,405, 605	R0.3/R0.9, 22.3/24.0,3.0/R1.6	1696	1929

REGISTERED CIVIL ENGINEER 07-27-09 DATE

2-1-10
PLANS APPROVAL DATE

REGISTERED PROFESSIONAL ENGINEER A. Priley No. C 73375 Exp. 12-31-10 CIVIL STATE OF CALIFORNIA

The State of California or its officers or agents shall not be responsible for the accuracy or completeness of electronic copies of this plan sheet.

OCTA
550 SOUTH MAIN STREET
ORANGE, CA 92863

TRC
21 TECHNOLOGY DR
IRVINE, CA 92618

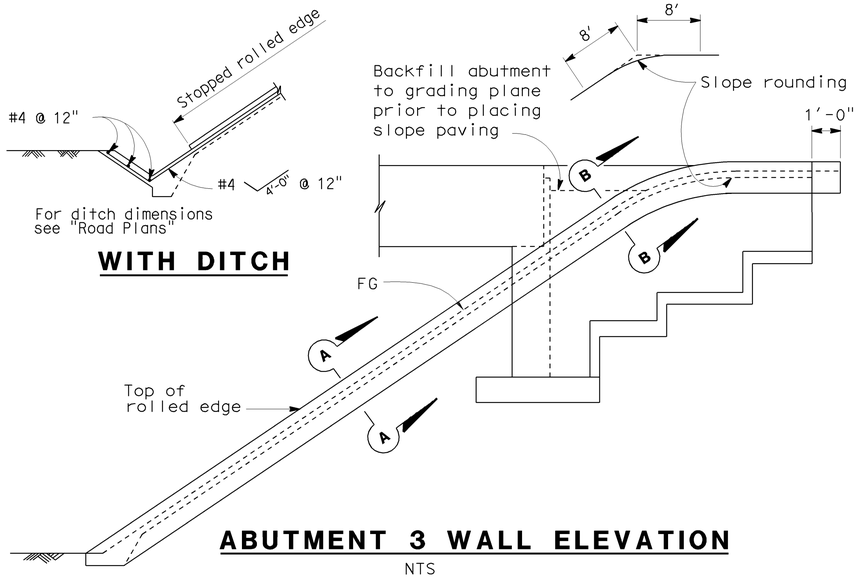

ABUTMENT 3 WALL ELEVATION

NTS

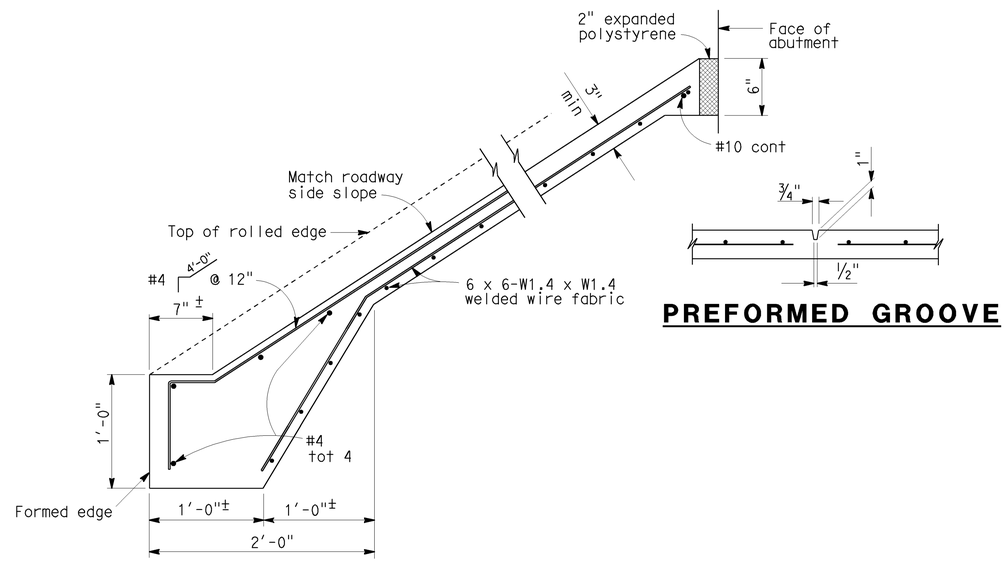

PREFORMED GROOVE

TYPICAL SECTION - CONCRETE PAVING

NTS

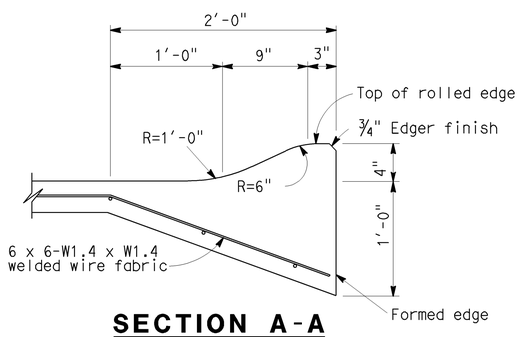

SECTION A-A

NTS

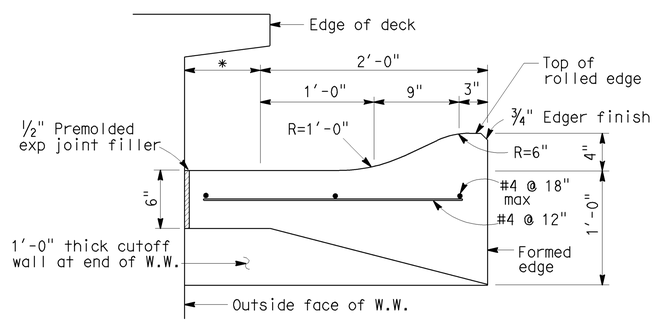

SECTION B-B

NTS

*This dimension becomes zero when edge of deck is at outside face of W.W.

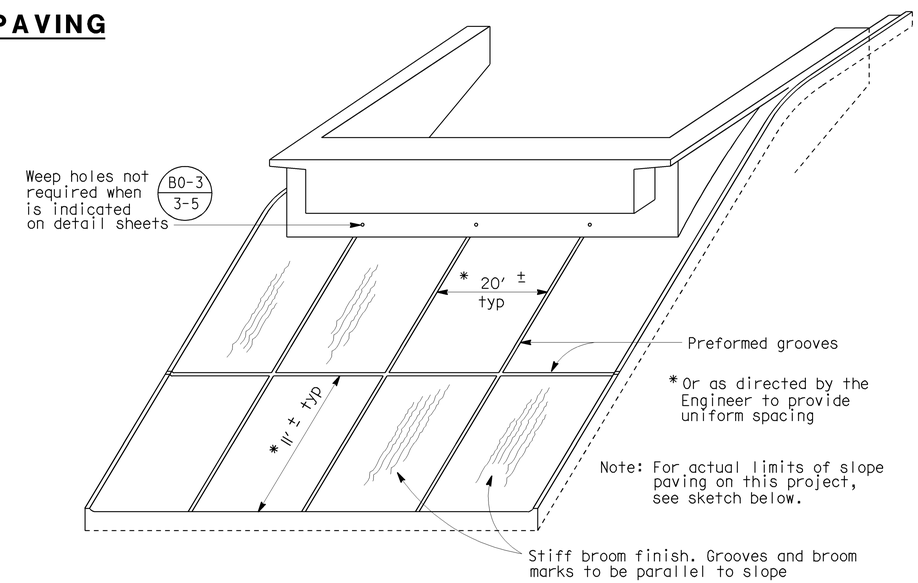

PICTORIAL VIEW OF TYPICAL INSTALLATION

NTS

Sudhakar Vatti
DESIGN OVERSIGHT Sudhakar Vatti
8-10-09
SIGN OFF DATE

	BY	CHECKED
DESIGN	A. Priley	J. Hermstad
DETAILS	K. Michalski	J. Hermstad
QUANTITIES	A. Priley	J. Wong

PREPARED FOR THE STATE OF CALIFORNIA DEPARTMENT OF TRANSPORTATION

A. Priley
PROJECT ENGINEER

BRIDGE NO. 55-1099
POST MILE 22.64

SEAL BEACH BLVD OC (REPLACE)
SLOPE PAVING

DESIGN DETAIL SHEET (ENGLISH) (REV. 2/25/05)

ORIGINAL SCALE IN INCHES FOR REDUCED PLANS 0 1 2 3

CU 12235
EA 071631

DISREGARD PRINTS BEARING EARLIER REVISION DATES
REVISION DATES (PRELIMINARY STAGE ONLY) 09/17/08 04/06/09 07/27/09

SHEET 38 OF 45

FILE => 55-1099-u-slpav.dgn

USERNAME => friehard DATE PLOTTED => 04-FEB-2010 TIME PLOTTED => 08:19

DIST	COUNTY	ROUTE	POST MILES TOTAL PROJECT	SHEET No	TOTAL SHEETS
12	Ora	22,405, 605	R0.3/R0.9, 22.3/24.0,3.0/R1.6	1697	1929

REGISTERED CIVIL ENGINEER 07/27/09 DATE

2-1-10
PLANS APPROVAL DATE

REGISTERED PROFESSIONAL ENGINEER G.J.Gunaranjan No. C71758 Exp.12-31-09 CIVIL STATE OF CALIFORNIA

The State of California or its officers or agents shall not be responsible for the accuracy or completeness of electronic copies of this plan sheet.

OCTA
550 SOUTH MAIN STREET
ORANGE, CA 92863

EARTH MECHANICS, INC.
17660, NEWHOPE STREET, SUITE E
FOUNTAIN VALLEY, CA 92708

REFERENCE: CALTRANS SOIL & ROCK LOGGING, CLASSIFICATION, AND PRESENTATION MANUAL (JUNE 2007)

CEMENTATION

Description	Criteria
Weak	Crumbles or breaks with handling or little finger pressure.
Moderate	Crumbles or breaks with considerable finger pressure.
Strong	Will not crumble or break with finger pressure.

BOREHOLE IDENTIFICATION

Symbol	Hole Type	Description
Size	A	Auger Boring
Size	R P	Rotary drilled boring Rotary percussion boring (air)
Size	R	Rotary drilled diamond core
Size	HD HA	Hand driven (1-inch soil tube) Hand Auger
●	D	Dynamic Cone Penetration Boring
▲	CPT	Cone Penetration Test (ASTM D 5778-95)
□	O	Other

Note: Size in inches.

CONSISTENCY OF COHESIVE SOILS

Description	Unconfined Compressive Strength (tsf)	Pocket Penetrometer Measurement (tsf)	Torvane Measurement (tsf)	Field Approximation
Very Soft	< 0.25	< 0.25	< 0.12	Easily penetrated several inches by fist
Soft	0.25 to 0.50	0.25 to 0.50	0.12 to 0.25	Easily penetrated several inches by thumb
Medium Stiff	0.50 to 1.0	0.50 to 1.0	0.25 to 0.50	Penetrated several inches by thumb with moderate effort
Stiff	1 to 2	1 to 2	0.50 to 1.0	Readily indented by thumb but penetrated only with great effort
Very Stiff	2 to 4	2 to 4	1.0 to 2.0	Readily indented by thumbnail
Hard	> 4.0	> 4.0	> 2.0	Indented by thumbnail with difficulty

PLASTICITY OF FINE-GRAINED SOILS

Description	Criteria
Nonplastic	A 1/8-inch thread cannot be rolled at any water content.
Low	The thread can barely be rolled and the lump cannot be formed when drier than the plastic limit.
Medium	The thread is easy to roll and not much time is required to reach the plastic limit. The thread cannot be rerolled after reaching the plastic limit. The lump crumbles when drier than the plastic limit.
High	It takes considerable time rolling and kneading to reach the plastic limit. The thread can be rerolled several times after reaching the plastic limit. The lump can be formed without crumbling when drier than the plastic limit.

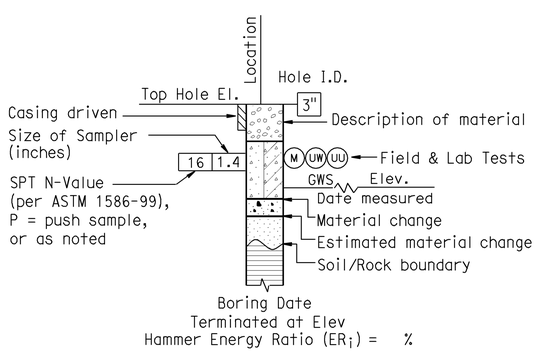

ROTARY BORING

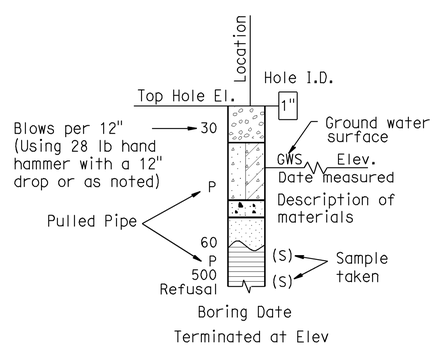

HAND BORING

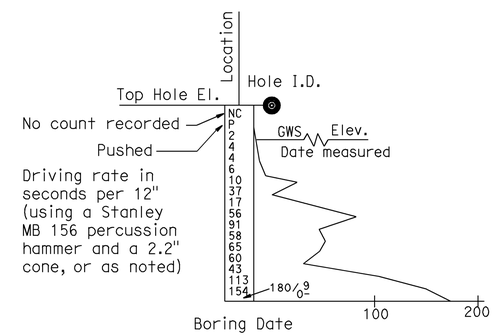

DYNAMIC CONE PENETRATION BORING

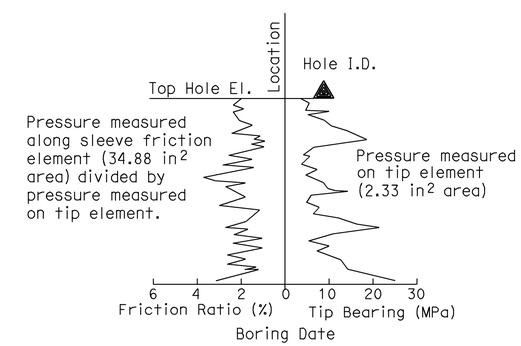

CONE PENETRATION TEST (CPT) SOUNDING

Sudhakar Vatti
DESIGN OVERSIGHT Sudhakar Vatti
8-10-09
SIGN OFF DATE

DRAWN BY: J.Fang
CHECKED BY: K.Pratheepan

FIELD INVESTIGATION BY:
R.Jie

PREPARED FOR THE STATE OF CALIFORNIA DEPARTMENT OF TRANSPORTATION

G.J.Gunaranjan
PROJECT ENGINEER

BRIDGE NO. 55-1099
POST MILE 22.64

SEAL BEACH BLVD OC (REPLACE)
LOG OF TEST BORINGS NO. 1

OSF CIVIL LOG OF TEST BORINGS SHEET (ENGLISH) (REV. 2-25-05)

ORIGINAL SCALE IN INCHES FOR REDUCED PLANS 0 1 2 3

CU 12235
EA 071631

DISREGARD PRINTS BEARING EARLIER REVISION DATES

REVISION DATES (PRELIMINARY STAGE ONLY) 09/17/08 03/23/09 04/06/09 07/21/09

SHEET 39 OF 45

FILE => 55-1099-z-ltb01.dgn

USERNAME => friehard DATE PLOTTED => 04-FEB-2010 TIME PLOTTED => 06:19

REFERENCE: CALTRANS SOIL & ROCK LOGGING, CLASSIFICATION, AND PRESENTATION MANUAL (JUNE 2007)

DIST	COUNTY	ROUTE	POST MILES TOTAL PROJECT	SHEET No	TOTAL SHEETS
12	Ora	22,405, 605	R0.3/R0.9, 22.3/24.0,3.0/R1.6	1698	1929

REGISTERED CIVIL ENGINEER — DATE 07/27/09

2-1-10
PLANS APPROVAL DATE

REGISTERED PROFESSIONAL ENGINEER G.J.Gunaranjan No. C71758 Exp. 12-31-09 CIVIL STATE OF CALIFORNIA

The State of California or its officers or agents shall not be responsible for the accuracy or completeness of electronic copies of this plan sheet.

OCTA
550 SOUTH MAIN STREET
ORANGE, CA 92863

EARTH MECHANICS, INC.
17660, NEWHOPE STREET, SUITE E
FOUNTAIN VALLEY, CA 92708

GROUP SYMBOLS AND NAMES

Graphic/Symbol	Group Names	Graphic/Symbol	Group Names
GW	Well-graded GRAVEL Well-graded GRAVEL with SAND	CL	Lean CLAY Lean CLAY with SAND Lean CLAY with GRAVEL SANDY lean CLAY SANDY lean CLAY with GRAVEL GRAVELLY lean CLAY GRAVELLY lean CLAY with SAND
GP	Poorly graded GRAVEL Poorly graded GRAVEL with SAND		
GW-GM	Well-graded GRAVEL with SILT Well-graded GRAVEL with SILT and SAND	CL-ML	SILTY CLAY SILTY CLAY with SAND SILTY CLAY with GRAVEL SANDY SILTY CLAY SANDY SILTY CLAY with GRAVEL GRAVELLY SILTY CLAY GRAVELLY SILTY CLAY with SAND
GW-GC	Well-graded GRAVEL with CLAY (or SILTY CLAY) Well-graded GRAVEL with CLAY and SAND (or SILTY CLAY and SAND)		
GP-GM	Poorly graded GRAVEL with SILT Poorly graded GRAVEL with SILT and SAND	ML	SILT SILT with SAND SILT with GRAVEL SANDY SILT SANDY SILT with GRAVEL GRAVELLY SILT GRAVELLY SILT with SAND
GP-GC	Poorly graded GRAVEL with CLAY (or SILTY CLAY) Poorly graded GRAVEL with CLAY and SAND (or SILTY CLAY and SAND)		
GM	SILTY GRAVEL SILTY GRAVEL with SAND	OL	ORGANIC lean CLAY ORGANIC lean CLAY with SAND ORGANIC lean CLAY with GRAVEL SANDY ORGANIC lean CLAY SANDY ORGANIC lean CLAY with GRAVEL GRAVELLY ORGANIC lean CLAY GRAVELLY ORGANIC lean CLAY with SAND
GC	CLAYEY GRAVEL CLAYEY GRAVEL with SAND		
GC-GM	SILTY, CLAYEY GRAVEL SILTY, CLAYEY GRAVEL with SAND	OL	ORGANIC SILT ORGANIC SILT with SAND ORGANIC SILT with GRAVEL SANDY ORGANIC SILT SANDY ORGANIC SILT with GRAVEL GRAVELLY ORGANIC SILT GRAVELLY ORGANIC SILT with SAND
SW	Well-graded SAND Well-graded SAND with GRAVEL		
SP	Poorly graded SAND Poorly graded SAND with GRAVEL	CH	Fat CLAY Fat CLAY with SAND Fat CLAY with GRAVEL SANDY fat CLAY SANDY fat CLAY with GRAVEL GRAVELLY fat CLAY GRAVELLY fat CLAY with SAND
SW-SM	Well-graded SAND with SILT Well-graded SAND with SILT and GRAVEL		
SW-SC	Well-graded SAND with CLAY (or SILTY CLAY) Well-graded SAND with CLAY and GRAVEL (or SILTY CLAY and GRAVEL)	MH	Elastic SILT Elastic SILT with SAND Elastic SILT with GRAVEL SANDY elastic SILT SANDY elastic SILT with GRAVEL GRAVELLY elastic SILT GRAVELLY elastic SILT with SAND
SP-SM	Poorly graded SAND with SILT Poorly graded SAND with SILT and GRAVEL		
SP-SC	Poorly graded SAND with CLAY (or SILTY CLAY) Poorly graded SAND with CLAY and GRAVEL (or SILTY CLAY and GRAVEL)	OH	ORGANIC fat CLAY ORGANIC fat CLAY with SAND ORGANIC fat CLAY with GRAVEL SANDY ORGANIC fat CLAY SANDY ORGANIC fat CLAY with GRAVEL GRAVELLY ORGANIC fat CLAY GRAVELLY ORGANIC fat CLAY with SAND
SM	SILTY SAND SILTY SAND with GRAVEL		
SC	CLAYEY SAND CLAYEY SAND with GRAVEL	OH	ORGANIC elastic SILT ORGANIC elastic SILT with SAND ORGANIC elastic SILT with GRAVEL SANDY ORGANIC elastic SILT SANDY ORGANIC elastic SILT with GRAVEL GRAVELLY ORGANIC elastic SILT GRAVELLY ORGANIC elastic SILT with SAND
SC-SM	SILTY, CLAYEY SAND SILTY, CLAYEY SAND with GRAVEL		
PT	PEAT	OL/OH	ORGANIC SOIL ORGANIC SOIL with SAND ORGANIC SOIL with GRAVEL SANDY ORGANIC SOIL SANDY ORGANIC SOIL with GRAVEL GRAVELLY ORGANIC SOIL GRAVELLY ORGANIC SOIL with SAND
	COBBLES COBBLES and BOULDERS BOULDERS		

FIELD AND LABORATORY TESTING

- (C) Consolidation (ASTM D 2435)
- (CL) Collapse Potential (ASTM D 5333)
- (CP) Compaction Curve (CTM 216)
- (CR) Corrosivity Testing (CTM 643, CTM 422, CTM 417)
- (CU) Consolidated Undrained Triaxial (ASTM D 4767)
- (DS) Direct Shear (ASTM D 3080)
- (EI) Expansion Index (ASTM D 4829)
- (M) Moisture Content (ASTM D 2216)
- (OC) Organic Content-% (ASTM D 2974)
- (P) Permeability (CTM 220)
- (PA) Particle Size Analysis (ASTM D 422)
- (PI) Plasticity Index (AASHTO T 90) Liquid Limit (AASHTO T 89)
- (PL) Point Load Index (ASTM D 5731)
- (PM) Pressure Meter
- (PP) Pocket Penetrometer
- (R) R-Value (CTM 301)
- (SE) Sand Equivalent (CTM 217)
- (SG) Specific Gravity (AASHTO T 100)
- (SL) Shrinkage Limit (ASTM D 427)
- (SW) Swell Potential (ASTM D 4546)
- (TV) Pocket Torvane
- (UC) Unconfined Compression-Soil (ASTM D 2166) Unconfined Compression-Rock (ASTM D 2938)
- (UU) Unconsolidated Undrained Triaxial (ASTM D 2850)
- (UW) Unit Weight (ASTM D 4767)
- (VS) Vane Shear (AASHTO T 223)

APPARENT DENSITY OF COHESIONLESS SOILS

Description	SPT N_{60} (Blows / 12 inches)
Very loose	0 - 4
Loose	5 - 10
Medium Dense	11 - 30
Dense	31 - 50
Very Dense	> 50

MOISTURE

Description	Criteria
Dry	Absence of moisture, dusty, dry to the touch
Moist	Damp but no visible water
Wet	Visible free water, usually soil is below water table

PERCENT OR PROPORTION OF SOILS

Description	Criteria
Trace	Particles are present but estimated to be less than 5%
Few	5 to 10%
Little	15 to 25%
Some	30 to 45%
Mostly	50 to 100%

PARTICLE SIZE

Description		Size
Boulder		> 12"
Cobble		3" to 12"
Gravel	Coarse	3/4" to 3"
	Fine	No. 4 to 3/4"
Sand	Coarse	No. 10 to No. 4
	Medium	No. 40 to No. 10
	Fine	No. 200 to No. 40

Sudhakar Vatti
DESIGN OVERSIGHT Sudhakar Vatti
8-10-09
SIGN OFF DATE

DRAWN BY: J.Fang
CHECKED BY: K.Pratheepan

FIELD INVESTIGATION BY:
R.Jie

PREPARED FOR THE STATE OF CALIFORNIA DEPARTMENT OF TRANSPORTATION

G.J.Gunaranjan
PROJECT ENGINEER

BRIDGE NO. 55-1099
POST MILE 22.64

SEAL BEACH BLVD OC (REPLACE)
LOG OF TEST BORINGS NO. 2

OSF CIVIL LOG OF TEST BORINGS SHEET (ENGLISH) (REV. 2-25-05)

ORIGINAL SCALE IN INCHES FOR REDUCED PLANS 0 1 2 3

CU 12235
EA 071631

DISREGARD PRINTS BEARING EARLIER REVISION DATES
REVISION DATES (PRELIMINARY STAGE ONLY) 09/17/08 03/23/09 04/06/09 07/21/09

SHEET 40 OF 45

FILE => 55-1099-z-ltb02.dgn

USERNAME => friehard DATE PLOTTED => 04-FEB-2010 TIME PLOTTED => 06:13

DIST	COUNTY	ROUTE	POST MILES TOTAL PROJECT	SHEET No	TOTAL SHEETS
12	Ora	22,405, 605	R0.3/R0.9, 22.3/24.0,3.0/R1.6	1699	1929

REGISTERED CIVIL ENGINEER 07/27/09 DATE

2-1-10
PLANS APPROVAL DATE

REGISTERED PROFESSIONAL ENGINEER G.J.Gunaranjan No. C71758 Exp. 12-31-09 CIVIL STATE OF CALIFORNIA

The State of California or its officers or agents shall not be responsible for the accuracy or completeness of electronic copies of this plan sheet.

OCTA
550 SOUTH MAIN STREET
ORANGE, CA 92863

EARTH MECHANICS, INC.
17660, NEWHOPE STREET, SUITE E
FOUNTAIN VALLEY, CA 92708

BENCHMARKS:

Monument: 1A-144-04

Described by OCS 2005 - Found 3.75" OCS aluminum benchmark disk stamped "1A-144-04", set in the southwesterly corner of a 4.4 ft by 4.4 ft concrete catch basin. Monument is located in the northeasterly corner of the intersection of Seal Beach Boulevard and St. Cloud Drive, 44 ft easterly of the centerline of Seal Beach Boulevard and 58 ft northerly of the centerline of St. Cloud Dr. Monument is set level with the sidewalk.

Elevation: 15.37 feet

NOTES:

(1) This LOTB sheet (Boring Record) was prepared in accordance with the Caltrans Soil and Rock Classification Logging, Classification and Presentation Manual (June 2007).

(2) 2.4" samples were taken using a California Modified Sampler.

(3) An automatic trip hammer system consisting of a hammer weight of 140 lbs falling a distance of 30" was used to advance the drive sampler.

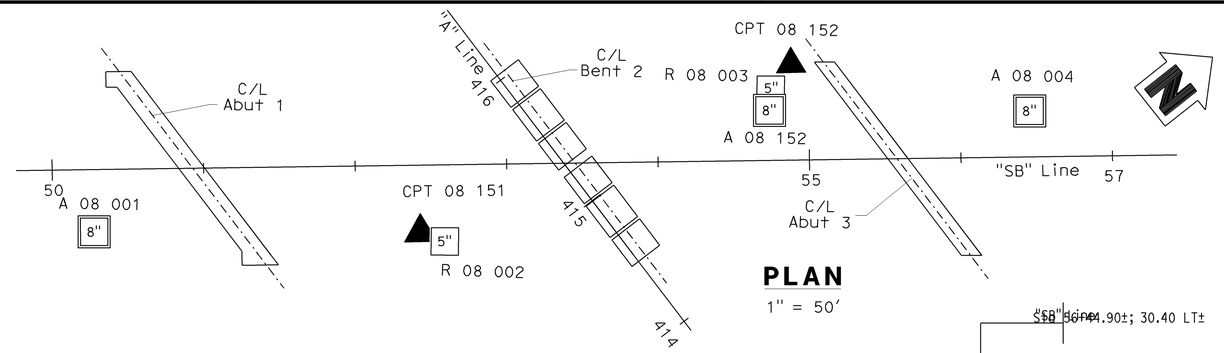

PLAN
1" = 50'

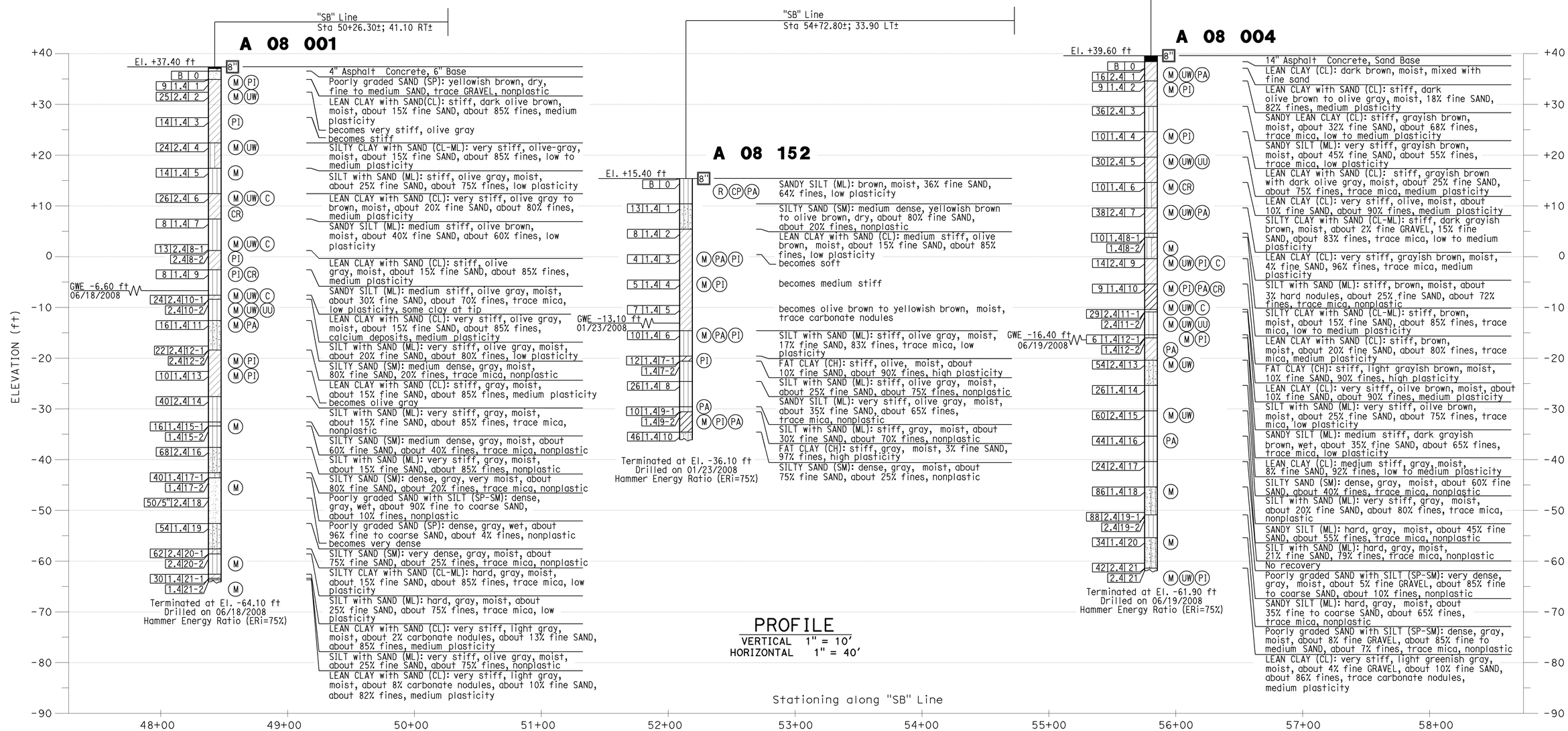

PROFILE
VERTICAL 1" = 10'
HORIZONTAL 1" = 40'

Sudhakar Vatti
DESIGN OVERSIGHT Sudhakar Vatti
8-10-09
SIGN OFF DATE

DRAWN BY: J.Fang
CHECKED BY: K.Pratheepan

FIELD INVESTIGATION BY:
R.Jie

PREPARED FOR THE STATE OF CALIFORNIA DEPARTMENT OF TRANSPORTATION

G.J.Gunaranjan
PROJECT ENGINEER

BRIDGE NO. 55-1099
POST MILE 22.64

SEAL BEACH BLVD OC (REPLACE)
LOG OF TEST BORINGS NO. 3

OSF CIVIL LOG OF TEST BORINGS SHEET (ENGLISH) (REV. 2-25-05)

ORIGINAL SCALE IN INCHES FOR REDUCED PLANS 0 1 2 3

CU 12235
EA 071631

DISREGARD PRINTS BEARING EARLIER REVISION DATES 09/17/08 03/25/09 04/06/09 07/27/09

SHEET 41 OF 45

FILE => 55-1099-z-ltb03.dgn

USERNAME => trlenard DATE PLOTTED => 04-FEB-2010 TIME PLOTTED => 06:19

DIST	COUNTY	ROUTE	POST MILES TOTAL PROJECT	SHEET No	TOTAL SHEETS
12	Ora	22,405, 605	R0.3/R0.9, 22.3/24.0,3.0/R1.6	1700	1929

REGISTERED CIVIL ENGINEER 07/27/09 DATE

2-1-10
PLANS APPROVAL DATE

REGISTERED PROFESSIONAL ENGINEER G.J.Gunaranjan No. C71758 Exp. 12-31-09 CIVIL STATE OF CALIFORNIA

The State of California or its officers or agents shall not be responsible for the accuracy or completeness of electronic copies of this plan sheet.

OCTA
550 SOUTH MAIN STREET
ORANGE, CA 92863

EARTH MECHANICS, INC.
17660, NEWHOPE STREET, SUITE E
FOUNTAIN VALLEY, CA 92708

BENCHMARKS:

Monument: 1A-144-04

Described by OCS 2005 - Found 3.75" OCS aluminum benchmark disk stamped "1A-144-04", set in the southwesterly corner of a 4.4 ft by 4.4 ft concrete catch basin. Monument is located in the northeasterly corner of the intersection of Seal Beach Boulevard and St. Cloud Drive, 44 ft easterly of the centerline of Seal Beach Boulevard and 58 ft northerly of the centerline of St. Cloud Dr. Monument is set level with the sidewalk.

Elevation: 15.37 feet

NOTES:

(1) This LOTB sheet (Boring Record) was prepared in accordance with the Caltrans Soil and Rock Classification Logging, Classification and Presentation Manual (June 2007).

(2) 2.4" samples were taken using a California Modified Sampler.

(3) A rope and cat-head hammer system consisting of a hammer weight of 140 lbs falling a distance of 30" was used to advance the drive sampler.

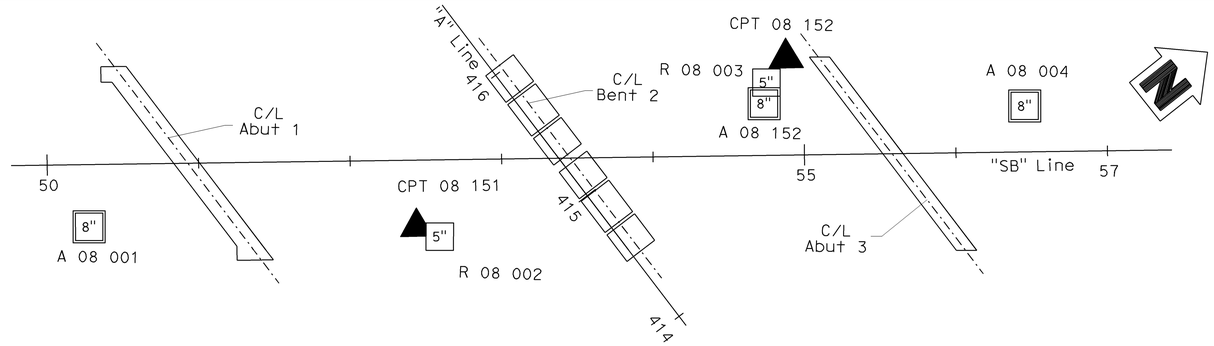

PLAN

1" = 50'

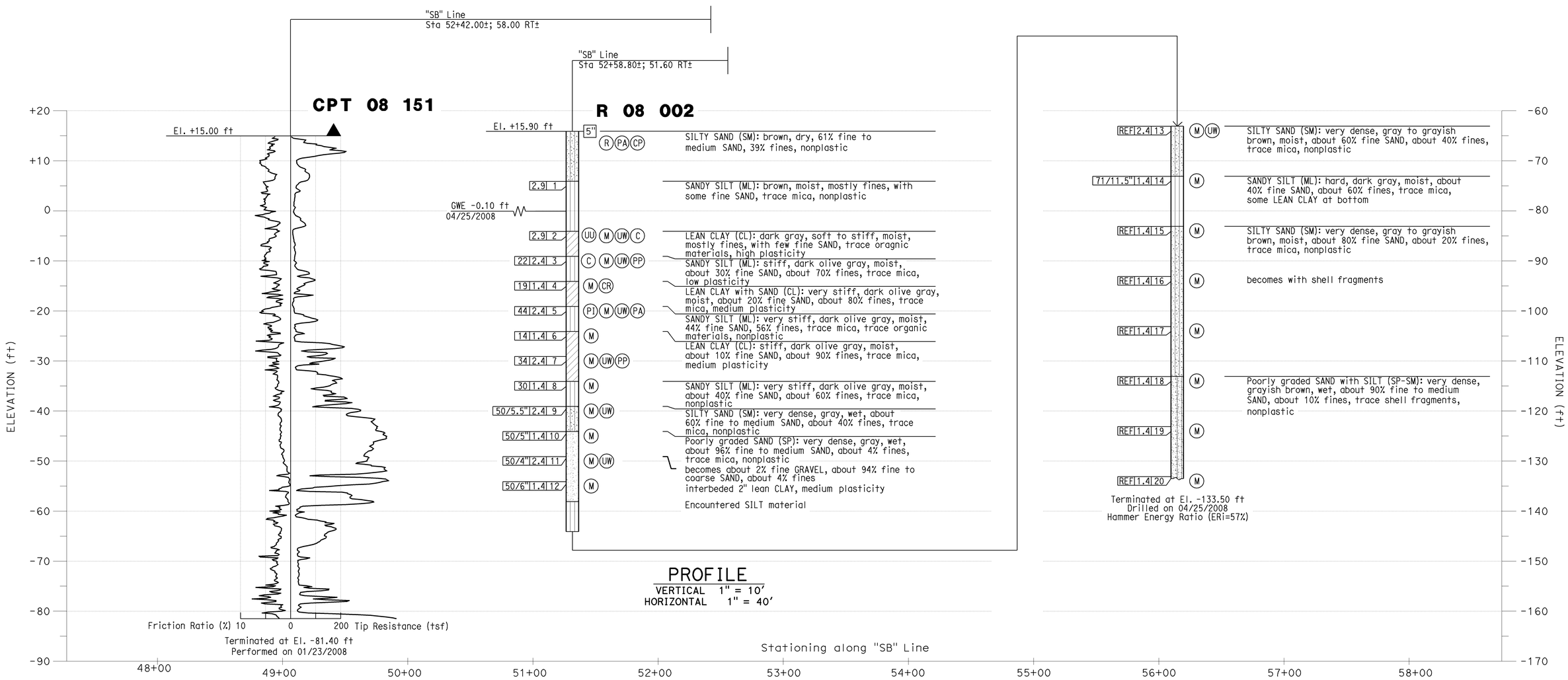

PROFILE

VERTICAL 1" = 10'
HORIZONTAL 1" = 40'

Sudhakar Vatti
DESIGN OVERSIGHT Sudhakar Vatti

8-10-09
SIGN OFF DATE

DRAWN BY: J.Fang

CHECKED BY: K.Pratheepan

FIELD INVESTIGATION BY:
R.Jie

PREPARED FOR THE STATE OF CALIFORNIA DEPARTMENT OF TRANSPORTATION

G.J.Gunaranjan
PROJECT ENGINEER

BRIDGE NO. 55-1099
POST MILE 22.64

SEAL BEACH BLVD OC (REPLACE)

LOG OF TEST BORINGS NO. 4

OSF CIVIL LOG OF TEST BORINGS SHEET (ENGLISH) (REV. 2-25-05)

ORIGINAL SCALE IN INCHES FOR REDUCED PLANS 0 1 2 3

CU 12235
EA 071631

DISREGARD PRINTS BEARING EARLIER REVISION DATES

REVISION DATES (PRELIMINARY STAGE ONLY) 09/17/08 03/25/09 04/06/09 07/21/09

SHEET 42 OF 45

FILE => 55-1099-z-1tb04.dgn

USERNAME => friehard DATE PLOTTED => 04-FEB-2010 TIME PLOTTED => 06:19