DIST	COUNTY	ROUTE	POST MILES TOTAL PROJECT	SHEET No	TOTAL SHEETS
12	Ora	22,405, 605	R0.3/R0.9, 22.3/24.0,3.0/R1.6	1801	1929

REGISTERED CIVIL ENGINEER 07-27-09 DATE

2-1-10
PLANS APPROVAL DATE

REGISTERED PROFESSIONAL ENGINEER A. Priley No. C 73375 Exp. 12-31-10 CIVIL STATE OF CALIFORNIA

The State of California or its officers or agents shall not be responsible for the accuracy or completeness of electronic copies of this plan sheet.

OCTA
550 SOUTH MAIN STREET
ORANGE, CA 92863

TRC
21 TECHNOLOGY DR
IRVINE, CA 92618

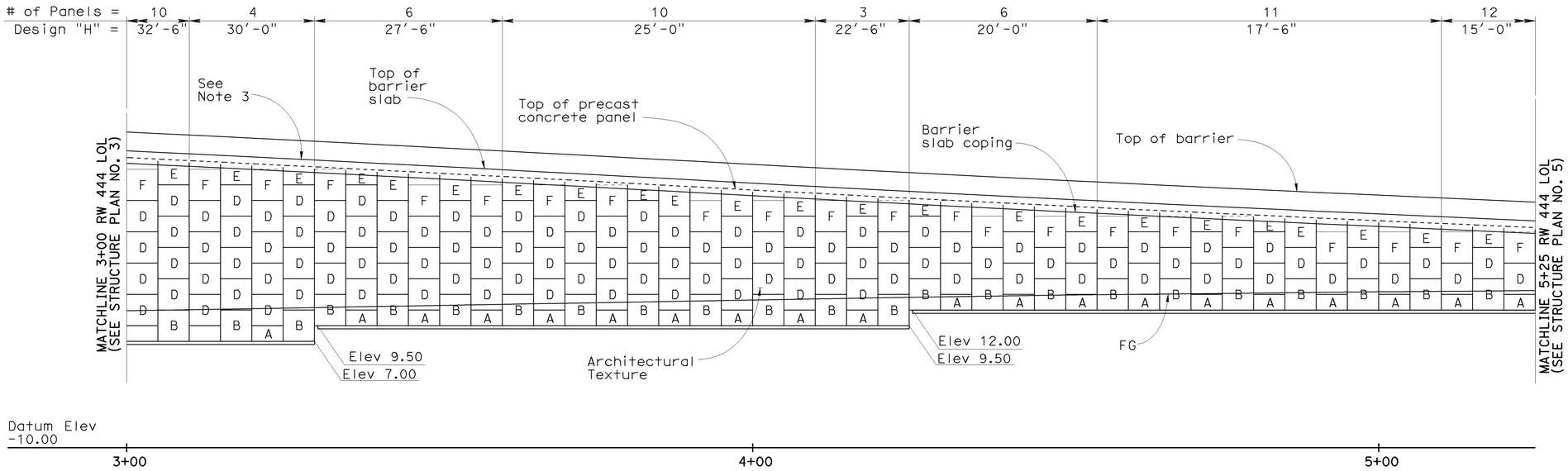

RW NO. 444 DEVELOPED ELEVATION

1" = 10'

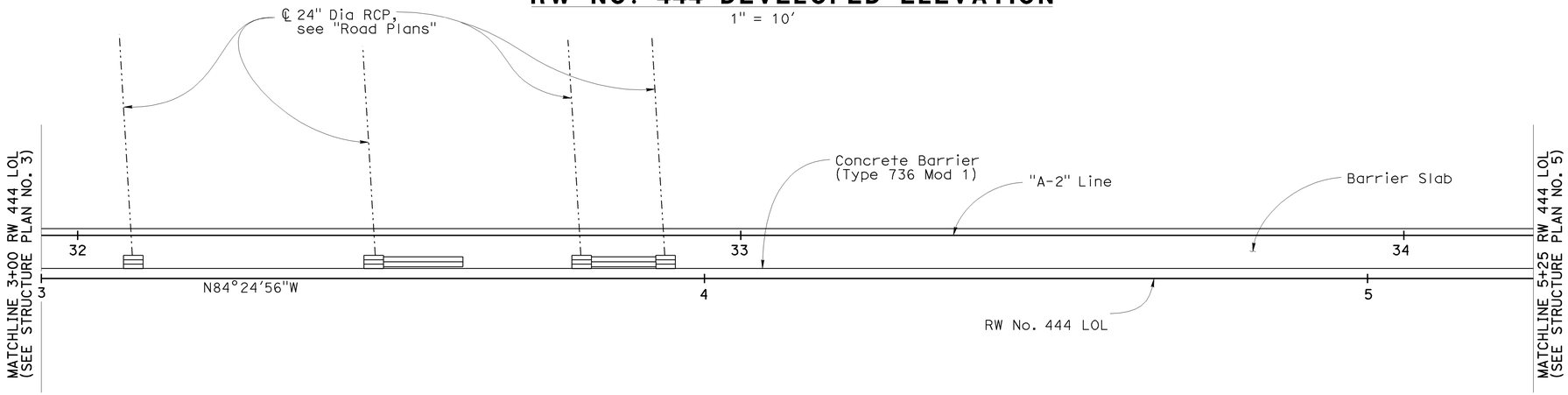

RW NO. 444 PLAN

1" = 10'

LEGEND

Indicates interval in years from time of construction to time of removal of inspection wire

30 / D — Indicates location of inspection wire, see "Wall Details No. 4" sheet

Indicates panel type designation (See Notes 1 & 2)

Drainage Inlet, see "Road Plans"

Grated Line Drain, see "Road Plans"

NOTES

1. For precast panel details, see "Panel Details No. 1" and "Panel Details No. 2" sheets
2. For architectural texture and details, see "Architectural Panel Layout No. 2" and "Architectural Details No. 1" thru "Architectural Details No. 3" sheets
3. For top of wall elevations, see "Wall Details No. 4" sheet
4. For barrier slab details, see "Wall Details Details No. 1" sheet. For barrier slab details at drainage inlet and line drain locations, see "Wall Details No. 2" sheet
5. Elevation shown at top of leveling pad

Sudhakar Vatti
DESIGN OVERSIGHT Sudhakar Vatti
8-10-09
SIGN OFF DATE

	BY	CHECKED
DESIGN	A. Priley	K. Michalski
DETAILS	A. Priley	J. Hermstad
QUANTITIES	A. Priley	J. Wong

PREPARED FOR THE STATE OF CALIFORNIA DEPARTMENT OF TRANSPORTATION

A. Priley
PROJECT ENGINEER

BRIDGE NO. 55E0102
POST MILE 23.2

WALLS NO. 442 & 444
STRUCTURE PLAN NO. 4

DESIGN DETAIL SHEET (ENGLISH) (REV. 2/25/05)

ORIGINAL SCALE IN INCHES FOR REDUCED PLANS 0 1 2 3

CU 12235
EA 071631

DISREGARD PRINTS BEARING EARLIER REVISION DATES

REVISION DATES (PRELIMINARY STAGE ONLY) 04/06/09 06/05/09 07/27/09

SHEET 8 OF 27

FILE => 55-e0102-c-sp04.dgn

USERNAME => trcarol DATE PLOTTED => 04-FEB-2010 TIME PLOTTED => 10:24

DIST	COUNTY	ROUTE	POST MILES TOTAL PROJECT	SHEET No	TOTAL SHEETS
12	Ora	22,405, 605	R0.3/R0.9, 22.3/24.0,3.0/R1.6	1802	1929

REGISTERED CIVIL ENGINEER 07-27-09 DATE

2-1-10
PLANS APPROVAL DATE

REGISTERED PROFESSIONAL ENGINEER A. Priley No. C 73375 Exp. 12-31-10 CIVIL STATE OF CALIFORNIA

The State of California or its officers or agents shall not be responsible for the accuracy or completeness of electronic copies of this plan sheet.

OCTA
550 SOUTH MAIN STREET
ORANGE, CA 92863

TRC
21 TECHNOLOGY DR
IRVINE, CA 92618

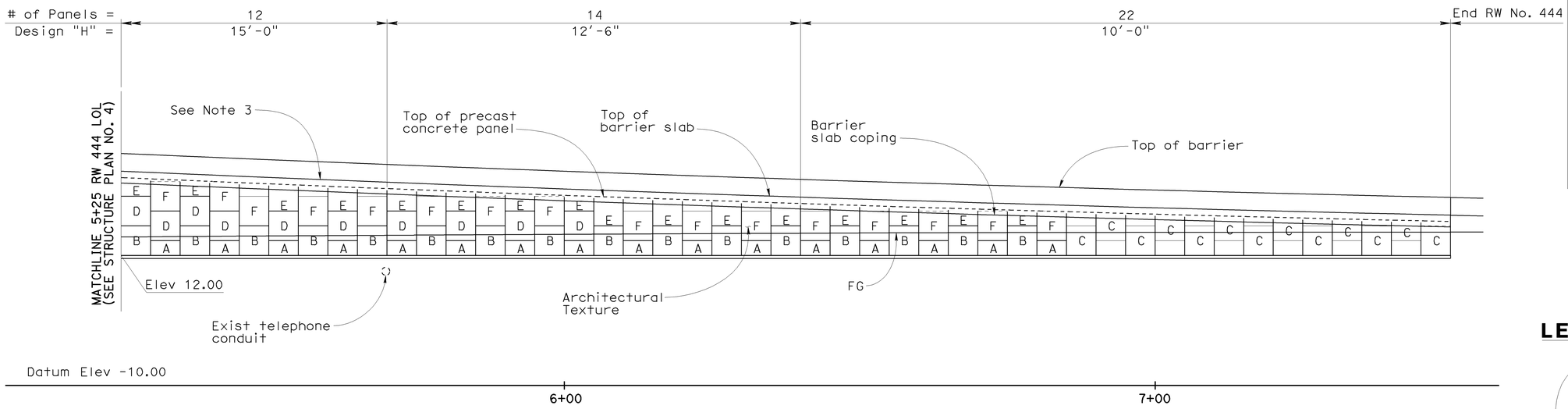

RW NO. 444 DEVELOPED ELEVATION

1" = 10'

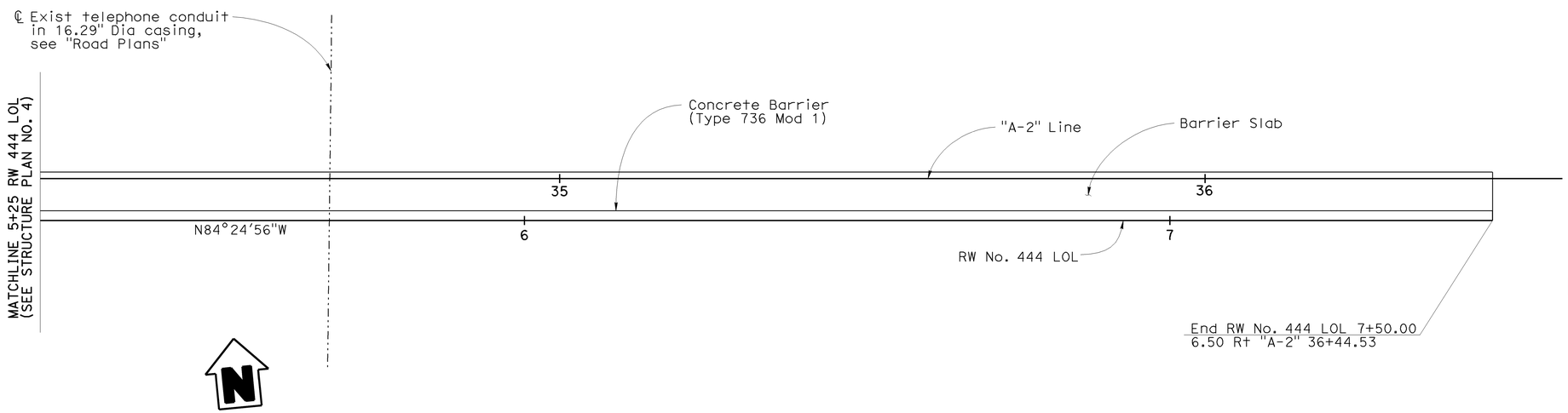

RW NO. 444 PLAN

1" = 10'

LEGEND

30 / D

- Indicates interval in years from time of construction to time of removal of inspection wire
- Indicates location of inspection wire, see "Wall Details No. 4" sheet
- Indicates panel type designation (See Notes 1 & 2)

NOTES

1. For precast panel details, see "Panel Details No. 1" and "Panel Details No. 2" sheets
2. For architectural texture and details, see "Architectural Panel Layout No. 2" and "Architectural Details No. 1" thru "Architectural Details No. 3" sheets
3. For top of wall elevations, see "Wall Details No. 4" sheet
4. For barrier slab details, see "Wall Details No. 1" sheet. For barrier slab details at drainage inlet and line drain locations, see "Wall Details No. 2" sheet
5. Elevation shown at top of leveling pad

Sudhakar Vatti
DESIGN OVERSIGHT Sudhakar Vatti
8-10-09
SIGN OFF DATE

	BY	CHECKED
DESIGN	A. Priley	K. Michalski
DETAILS	A. Priley	J. Hermstad
QUANTITIES	A. Priley	J. Wong

PREPARED FOR THE STATE OF CALIFORNIA DEPARTMENT OF TRANSPORTATION

A. Priley
PROJECT ENGINEER

BRIDGE NO. 55E0102
POST MILE 23.2

WALLS NO. 442 & 444
STRUCTURE PLAN NO. 5

DESIGN DETAIL SHEET (ENGLISH) (REV. 2/25/05)

ORIGINAL SCALE IN INCHES FOR REDUCED PLANS 0 1 2 3

CU 12235
EA 071631

DISREGARD PRINTS BEARING EARLIER REVISION DATES

REVISION DATES (PRELIMINARY STAGE ONLY) 04/06/09 06/08/09 07/27/09

SHEET 9 OF 27

FILE => 55-e0102-c-sp05.dgn

USERNAME => trcarol DATE PLOTTED => 04-FEB-2010 TIME PLOTTED => 10:24

DIST	COUNTY	ROUTE	POST MILES TOTAL PROJECT	SHEET No	TOTAL SHEETS
12	Ora	22,405, 605	R0.3/R0.9, 22.3/24.0,3.0/R1.6	1803	1929

REGISTERED CIVIL ENGINEER 07-27-09 DATE

2-1-10
PLANS APPROVAL DATE

REGISTERED PROFESSIONAL ENGINEER A. Priley No. C 73375 Exp. 12-31-10 CIVIL STATE OF CALIFORNIA

The State of California or its officers or agents shall not be responsible for the accuracy or completeness of electronic copies of this plan sheet.

OCTA
550 SOUTH MAIN STREET
ORANGE, CA 92863

TRC
21 TECHNOLOGY DR
IRVINE, CA 92618

NOTES

1. Place reinforced elastomeric bearing pads in all of the panel joints. Place one in each vertical joint at intersections with horizontal joints. Place two per panel in each horizontal joint.
   ¾" x 2⅜" x 6" for vertical joints
   ¾" x 4" x 6" for horizontal joints
2. Top of Panels C, E and F shall be cast to conform to wall profile
3. Omit wire mat when vertical spacing between mats is less than 6"
4. Top welded wire mat in wall shall be sloped -5% min to -15% max with respect to the roadway slope unless otherwise directed by the engineer. Wire mats below the top level may be sloped down as required to maintain 6" min separation from other mats. For overlapping reinforcement in back-to-back walls, 3" min separation between mats is required

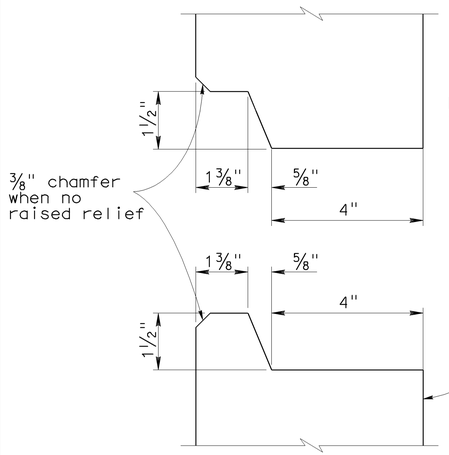

HORIZONTAL JOINT DETAIL

6" = 1'-0"

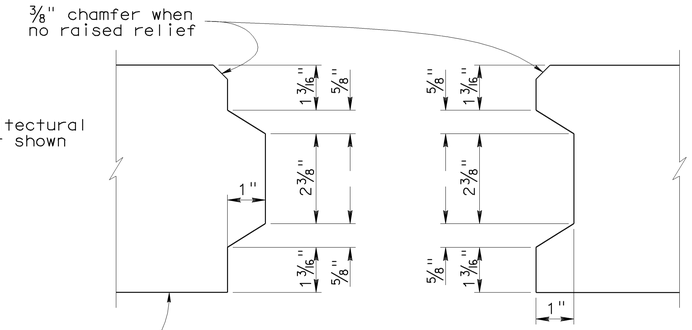

VERTICAL JOINT DETAIL

6" = 1'-0"

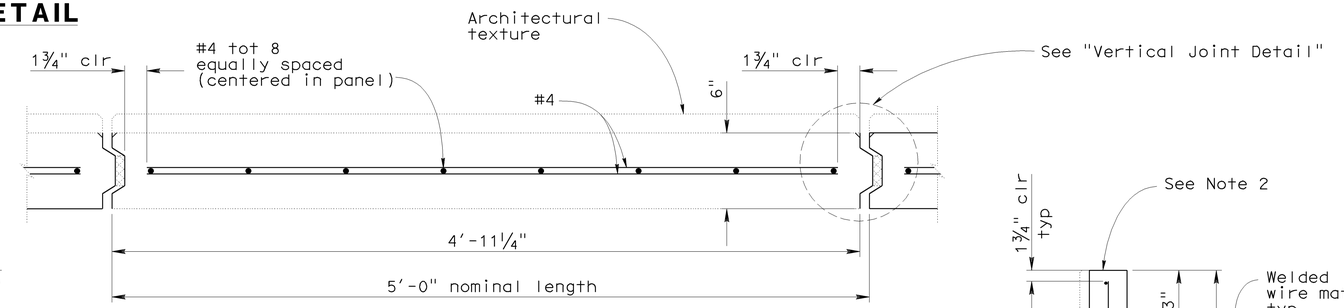

PRECAST PANEL PLAN

2" = 1'-0"

LEVELING PAD

Design "H"	"W"
"H" ≤ 30'-0"	1'-0"
"H" > 30'-0"	1'-6"

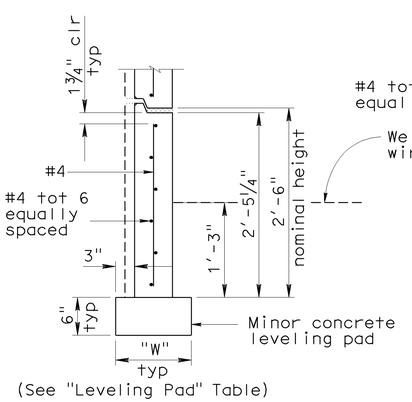

PANEL A

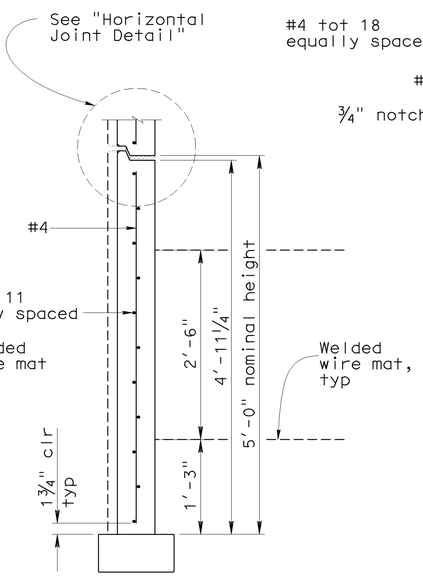

PANEL B

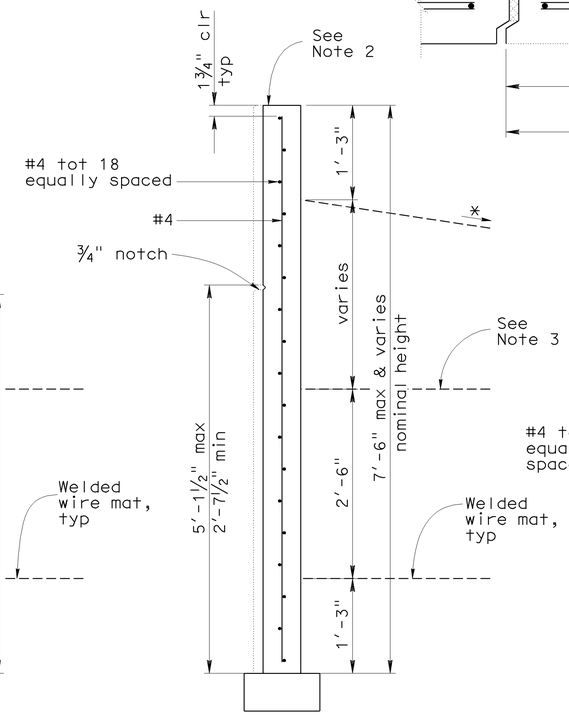

PANEL C

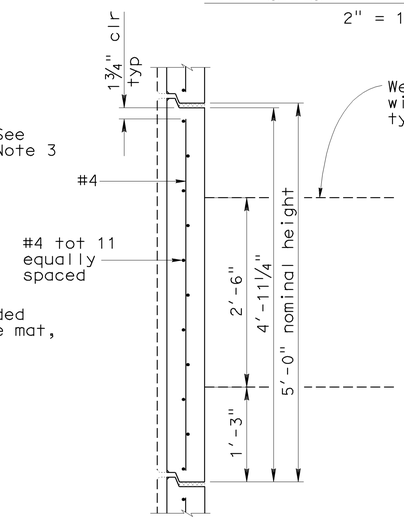

PANEL D

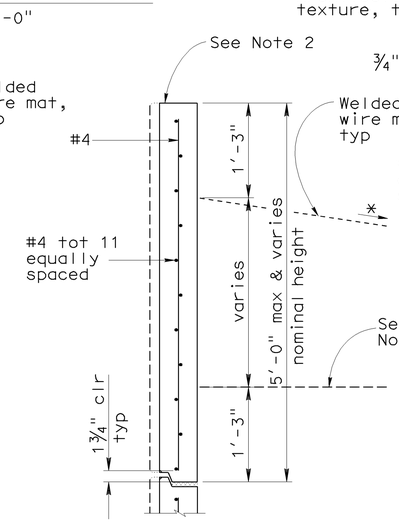

PANEL E

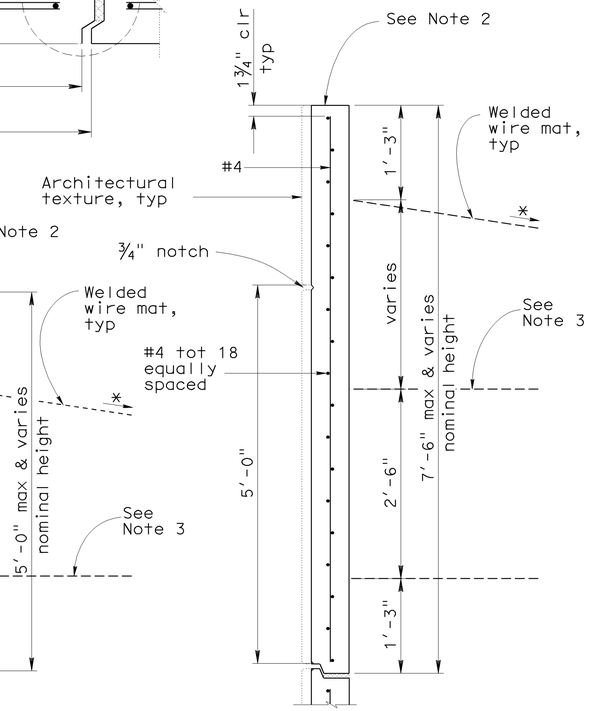

PANEL F

PRECAST PANEL SECTIONS

1" = 1'-0"
* See Note 4

Sudhakar Vatti
DESIGN OVERSIGHT Sudhakar Vatti
8-10-09
SIGN OFF DATE

	BY	CHECKED
DESIGN	A. Priley	K. Michalski
DETAILS	A. Priley	J. Hermstad
QUANTITIES	A. Priley	J. Wong

PREPARED FOR THE STATE OF CALIFORNIA DEPARTMENT OF TRANSPORTATION

A. Priley
PROJECT ENGINEER

BRIDGE NO. 55E0102
POST MILE 23.2

WALLS NO. 442 & 444
PANEL DETAILS NO. 1

DESIGN DETAIL SHEET (ENGLISH) (REV. 2/25/05)

ORIGINAL SCALE IN INCHES FOR REDUCED PLANS 0 1 2 3

CU 12235
EA 071631

DISREGARD PRINTS BEARING EARLIER REVISION DATES

REVISION DATES (PRELIMINARY STAGE ONLY) 04/06/09 06/05/09 07/27/09

SHEET 10 OF 27

FILE => 55-e0102-f-pdt01.dgn

USERNAME => rrcarol DATE PLOTTED => 04-FEB-2010 TIME PLOTTED => 10:24

DIST	COUNTY	ROUTE	POST MILES TOTAL PROJECT	SHEET No	TOTAL SHEETS
12	Ora	22,405, 605	R0.3/R0.9, 22.3/24.0,3.0/R1.6	1804	1929

REGISTERED CIVIL ENGINEER 07-27-09 DATE

2-1-10
PLANS APPROVAL DATE

REGISTERED PROFESSIONAL ENGINEER A. Priley No. C 73375 Exp. 12-31-10 CIVIL STATE OF CALIFORNIA

The State of California or its officers or agents shall not be responsible for the accuracy or completeness of electronic copies of this plan sheet.

OCTA
550 SOUTH MAIN STREET
ORANGE, CA 92863

TRC
21 TECHNOLOGY DR
IRVINE, CA 92618

SW NO. 442 SOIL REINFORCEMENT TABLE

Design "H"	10'-0"	12'-6"	15'-0"	17'-6"	20'-0"	22'-6"	25'-0"	27'-6"
Base Width	8'-0"	9'-0"	11'-0"	12'-0"	14'-0"	16'-0"	18'-0"	19'-0"
Top level of mesh: Levels below:	1-W11x6" 2-W11x9" W11x12"		1-W11x6" 2-W11x9" 2-W11x12" W11x18"			2-W11x6" 2-W11x12" 2-W11x18" W11x24"		

Design "H"	30'-0"	32'-6"	35'-0"	37'-6"	40'-0"	42'-6"	45'-0"	47'-6"
Base Width	21'-0"	23'-0"	25'-0"	26'-0"	28'-0"	30'-0"	32'-0"	33'-0"
Top level of mesh: Levels below:	2-W11x6" 2-W11x12" 2-W11x18" 4-W11x24" W15x30"					1-W11x6" 3-W11x12" 6-W11x24" 5-W15x30" W20x30"		

Note: Mesh is indicated sequentially from top level of mesh to bottom level of mesh

RW NO. 444 SOIL REINFORCEMENT TABLE

Design "H"	10'-0"	12'-6"	15'-0"	17'-6"	20'-0"	22'-6"	25'-0"	27'-6"
Base Width	8'-0"	9'-0"	11'-0"	12'-0"	14'-0"	16'-0"	18'-0"	19'-0"
Top level of mesh: Levels below:	1-W11x6" 2-W11x9" W11x12"		1-W11x6" 2-W11x9" 2-W11x12" W11x18"			1-W11x6" 2-W11x12" 2-W11x18" W11x24"		

Design "H"	30'-0"	32'-6"	35'-0"	37'-6"	40'-0"	42'-6"	45'-0"	47'-6"
Base Width	21'-0"	23'-0"	25'-0"	26'-0"	28'-0"	30'-0"	32'-0"	33'-0"
Top level of mesh: Levels below:	1-W11x9" 1-W11x12" 2-W11x18" 6-W11x24" W15x30"		1-W11x9" 1-W11x18" 8-W11x24" W15x30"			1-W11x9" 9-W11x24" 5-W15x30" W20x30"		

Note: Mesh is indicated sequentially from top level of mesh to bottom level of mesh

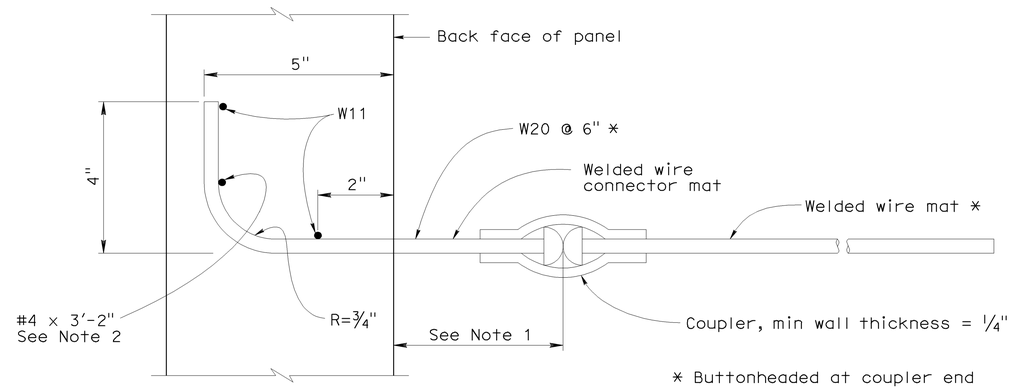

* Buttonheaded at coupler end

Note: Panel reinforcement not shown

SECTION A-A

No Scale

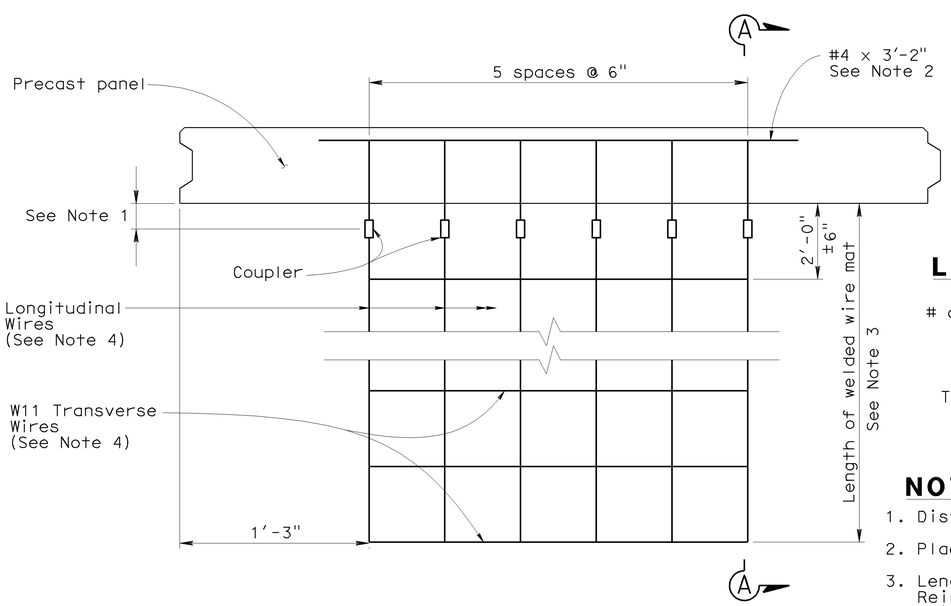

WELDED WIRE MAT DETAIL

No Scale

LEGEND

of levels — 2-W11x12" — Longitudinal Wire Size

Transverse Spacing

NOTES

1. Distance as required to permit coupler to be swaged
2. Place bar centered on connector mat but not welded to it
3. Length equals "Base width" of wall as shown in the "Soil Reinforcement Table," except it shall not be less than 16'-0" for the top 2 levels of mats at the top of the wall
4. See the "Soil Reinforcement Table" for longitudinal wire size and transverse wire spacing
5. Bond a strip of filter fabric 1'-0" wide over the full length of all panel joints

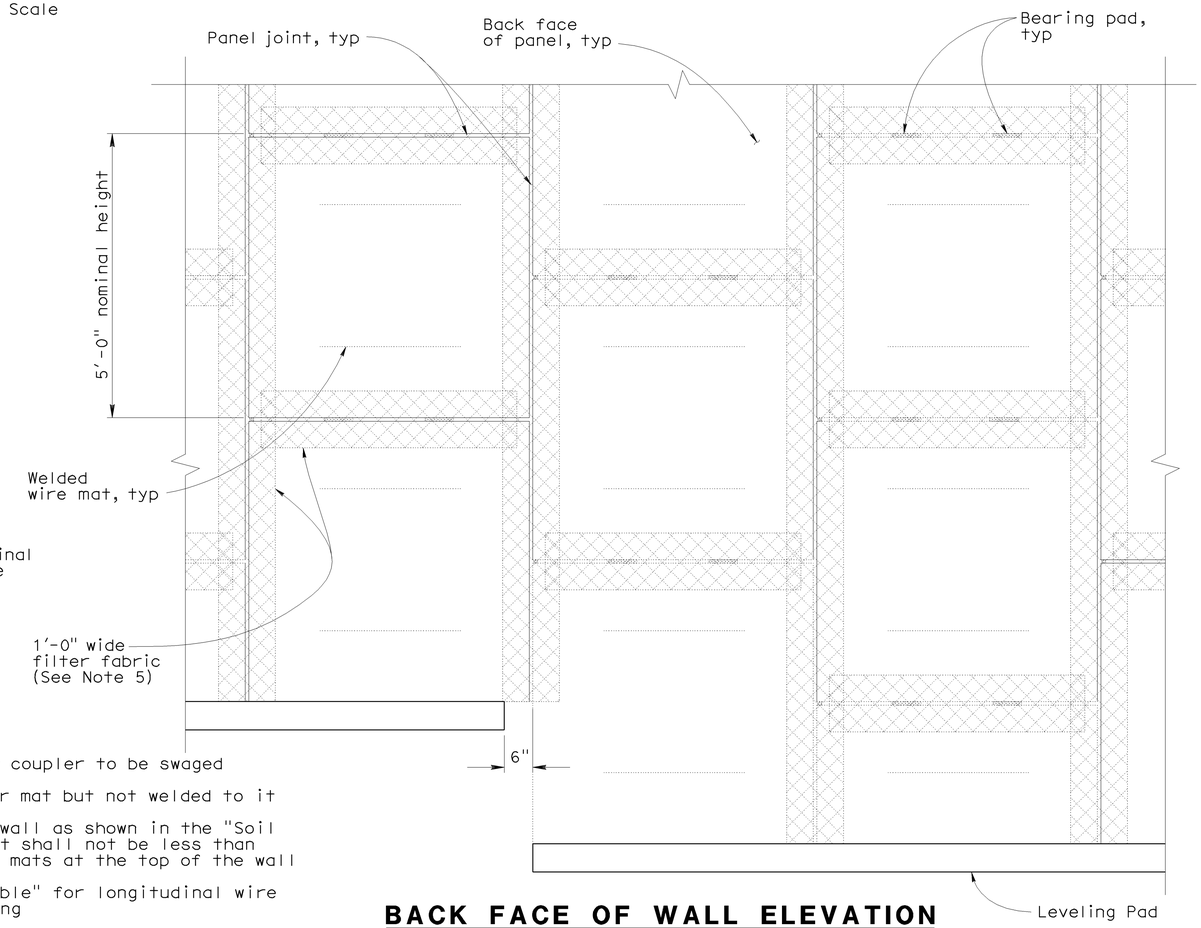

BACK FACE OF WALL ELEVATION

¾" = 1'-0"

Sudhakar Vatti
DESIGN OVERSIGHT Sudhakar Vatti

8-10-09
SIGN OFF DATE

	BY	CHECKED
DESIGN	A. Priley	K. Michalski
DETAILS	A. Priley	J. Hermstad
QUANTITIES	A. Priley	J. Wong

PREPARED FOR THE STATE OF CALIFORNIA DEPARTMENT OF TRANSPORTATION

A. Priley
PROJECT ENGINEER

BRIDGE NO. 55E0102
POST MILE 23.2

WALLS NO. 442 & 444
PANEL DETAILS NO. 2

DESIGN DETAIL SHEET (ENGLISH) (REV. 2/25/05)

ORIGINAL SCALE IN INCHES FOR REDUCED PLANS 0 1 2 3

CU 12235
EA 071631

DISREGARD PRINTS BEARING EARLIER REVISION DATES

REVISION DATES (PRELIMINARY STAGE ONLY) 04/06/09 06/05/09 07/27/09

SHEET 11 OF 27

FILE => 55-e0102-f-pdt02.dgn

USERNAME => ttrcgrol DATE PLOTTED => 04-FEB-2010 TIME PLOTTED => 10:24

DIST	COUNTY	ROUTE	POST MILES TOTAL PROJECT	SHEET No	TOTAL SHEETS
12	Ora	22,405, 605	R0.3/R0.9, 22.3/24.0,3.0/R1.6	1805	1929

REGISTERED CIVIL ENGINEER 07-27-09 DATE

2-1-10
PLANS APPROVAL DATE

REGISTERED PROFESSIONAL ENGINEER A. Priley No. C 73375 Exp. 12-31-10 CIVIL STATE OF CALIFORNIA

The State of California or its officers or agents shall not be responsible for the accuracy or completeness of electronic copies of this plan sheet.

OCTA
550 SOUTH MAIN STREET
ORANGE, CA 92863

TRC
21 TECHNOLOGY DR
IRVINE, CA 92618

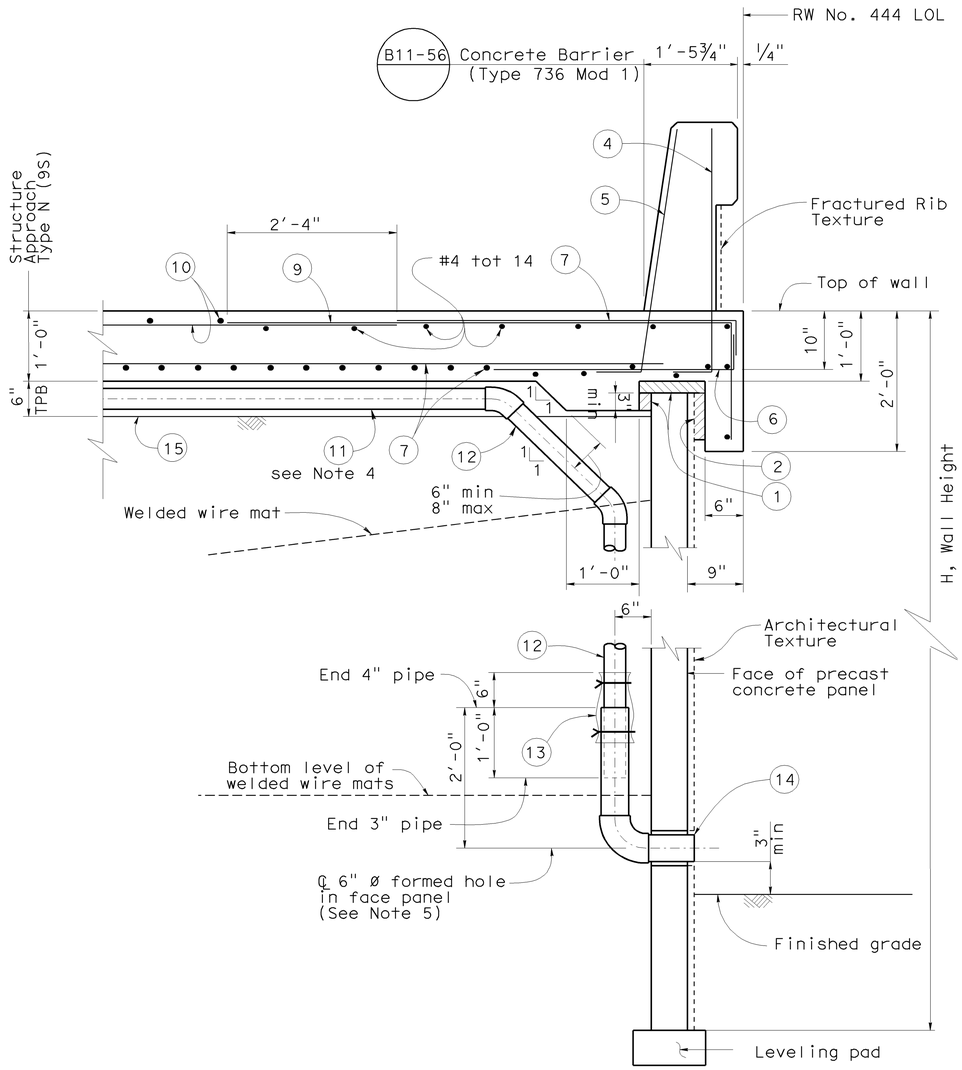

TYPICAL SECTION AT STRUCTURE APPROACH SLAB

No Scale

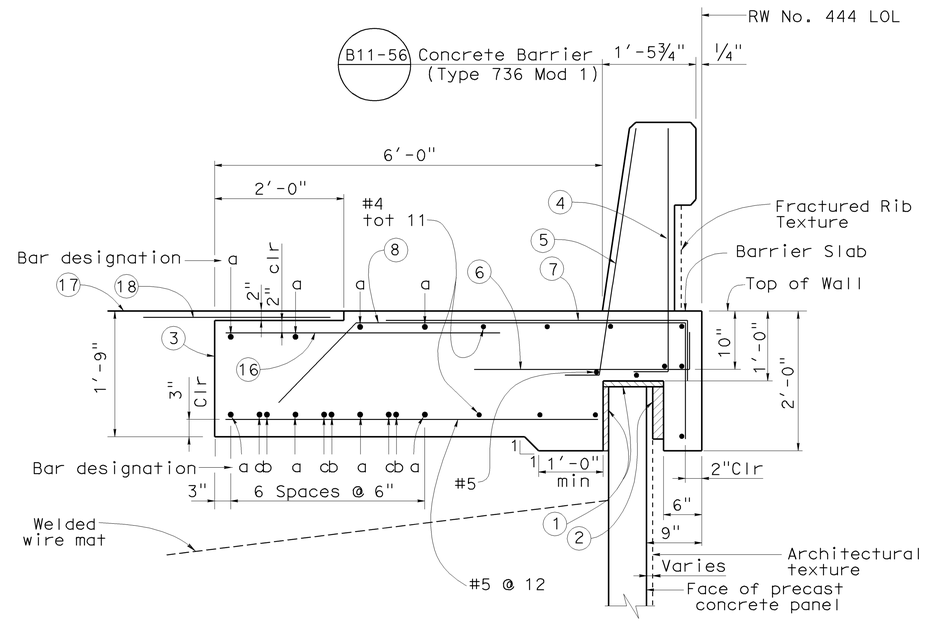

TYPICAL SECTION AT BARRIER SLAB

No Scale

NOTES

1. Clearance to reinforcing steel in concrete barrier to be 1"
2. Not all barrier reinforcement shown
3. No expansion joints in concrete barrier or barrier slab within MSE wall limits
4. Low end of subgrade shown. At high end install cap at end of ¾" slotted pipe. Subgrade drain located at end of structure approach slab
5. See "Outlet Detail" on "Wall Details No. 4" sheet
6. For barrier slab details at line drain and inlet locations, see "Wall Details No. 2" sheet

LEGEND

"a" bar = #6 continuous.
"b" bar = #6 X 59'-0"
"c" bar = #6 X 49'-2"

Place "b" and "c" bars at beginning and ending ends of barrier slab

1. 1" Expanded polystyrene
2. 1½" - 3" Expanded polystyrene. Recess expanded polystyrene 2" into coping
3. Contact joint
4. #5 6¼" @ 16 (To be in place prior to barrier slab or approach slab concrete)
5. #5 6¼" @ 8 (To be in place prior to barrier slab or approach slab concrete)
6. #5 6¼" 3'-4" @ 12
7. #5 4'-7" @ 12 bundled with 8 or 9 bars
8. #5 5'-0" 1'-3¼" @ 12
9. #5 6'-10⅝" @ 12
10. Approach slab reinforcement
11. 3" Plastic pipe (slotted)
12. 3" Plastic pipe and fittings (unslotted)
13. 1'-0" wide x 2'-0" filter fabric wrapped around pipe and secured with nylon ties
14. 4" Sch 80 PVC outlet pipe and fittings (unslotted)
15. Filter fabric
16. #5 x 4'-7" @ 12
17. AC Overlay on barrier slab, see "Road Plans"
18. 4'-0" wide pavement reinforcing fabric, see "Road Plans"

Sudhakar Vatti
DESIGN OVERSIGHT Sudhakar Vatti
8-10-09
SIGN OFF DATE

	BY	CHECKED
DESIGN	A. Priley	K. Michalski
DETAILS	A. Priley	J. Hermstad
QUANTITIES	A. Priley	J. Wong

PREPARED FOR THE STATE OF CALIFORNIA DEPARTMENT OF TRANSPORTATION

A. Priley
PROJECT ENGINEER

BRIDGE NO. 55E0102
POST MILE 23.2

WALLS NO. 442 & 444
WALL DETAILS NO. 1

DESIGN DETAIL SHEET (ENGLISH) (REV. 2/25/05)

ORIGINAL SCALE IN INCHES FOR REDUCED PLANS 0 1 2 3

CU 12235
EA 071631

DISREGARD PRINTS BEARING EARLIER REVISION DATES
REVISION DATES (PRELIMINARY STAGE ONLY) 04/06/09 06/05/09 07/27/09

SHEET 12 OF 27

FILE => 55-e0102-g-wdt01.dgn

USERNAME => trcarol DATE PLOTTED => 04-FEB-2010 TIME PLOTTED => 10:24

DIST	COUNTY	ROUTE	POST MILES TOTAL PROJECT	SHEET No	TOTAL SHEETS
12	Ora	22,405, 605	R0.3/R0.9, 22.3/24.0,3.0/R1.6	1806	1929

REGISTERED CIVIL ENGINEER 07-27-09 DATE

2-1-10
PLANS APPROVAL DATE

The State of California or its officers or agents shall not be responsible for the accuracy or completeness of electronic copies of this plan sheet.

REGISTERED PROFESSIONAL ENGINEER A. Priley No. C 73375 Exp. 12-31-10 CIVIL STATE OF CALIFORNIA

OCTA
550 SOUTH MAIN STREET
ORANGE, CA 92863

TRC
21 TECHNOLOGY DR
IRVINE, CA 92618

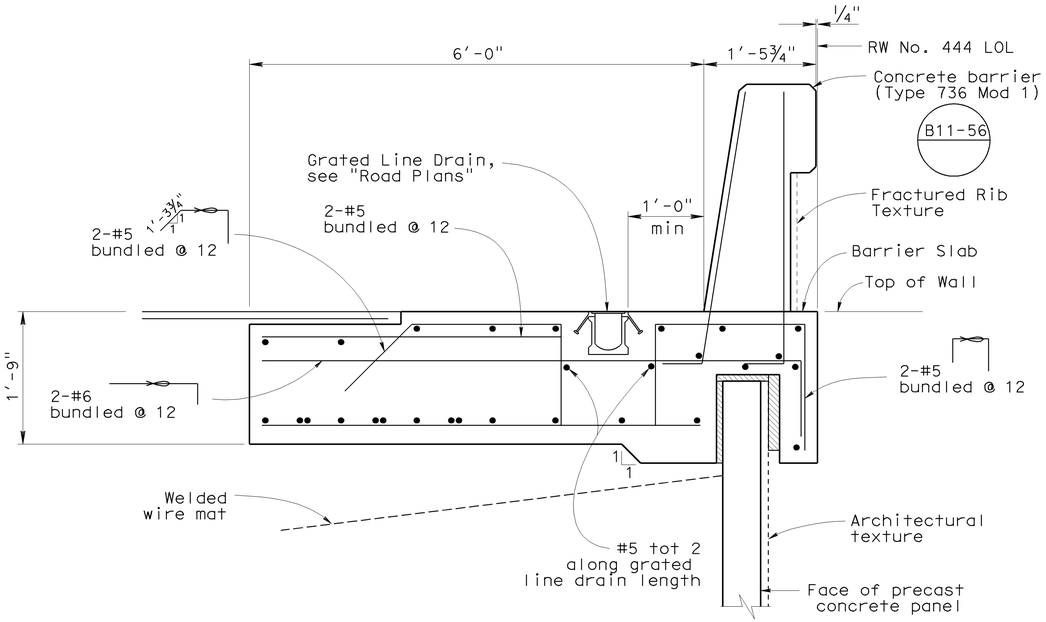

SECTION AT GRATED LINE DRAIN

No Scale

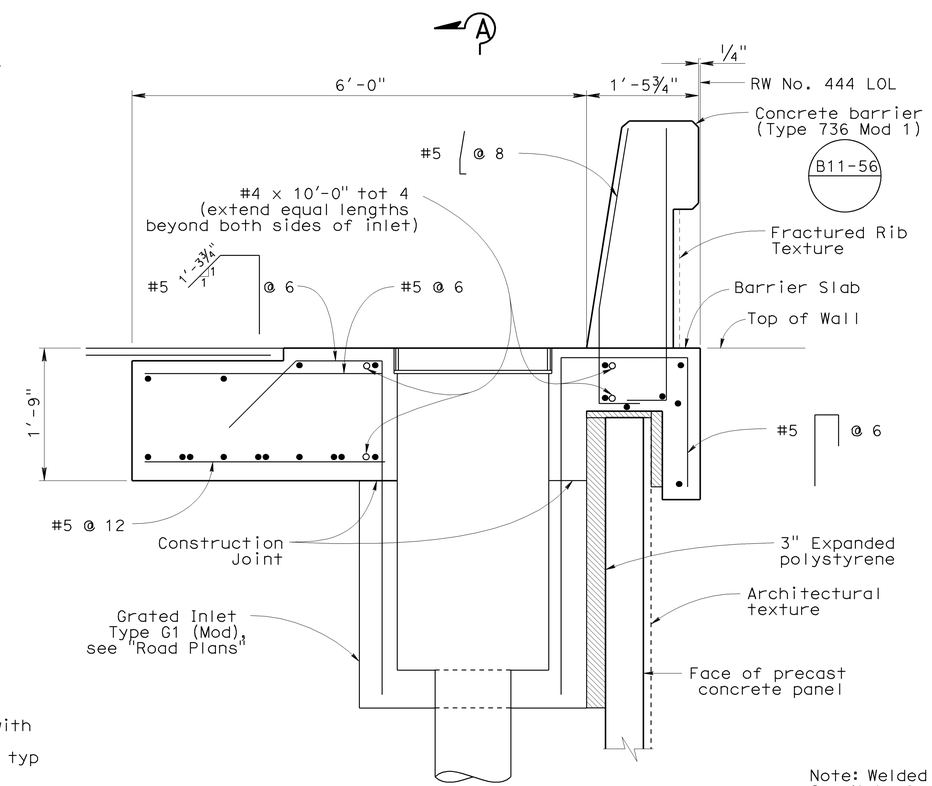

Note: Welded wire mat not shown. See Note 6

SECTION AT TYPE G1 INLET

No Scale

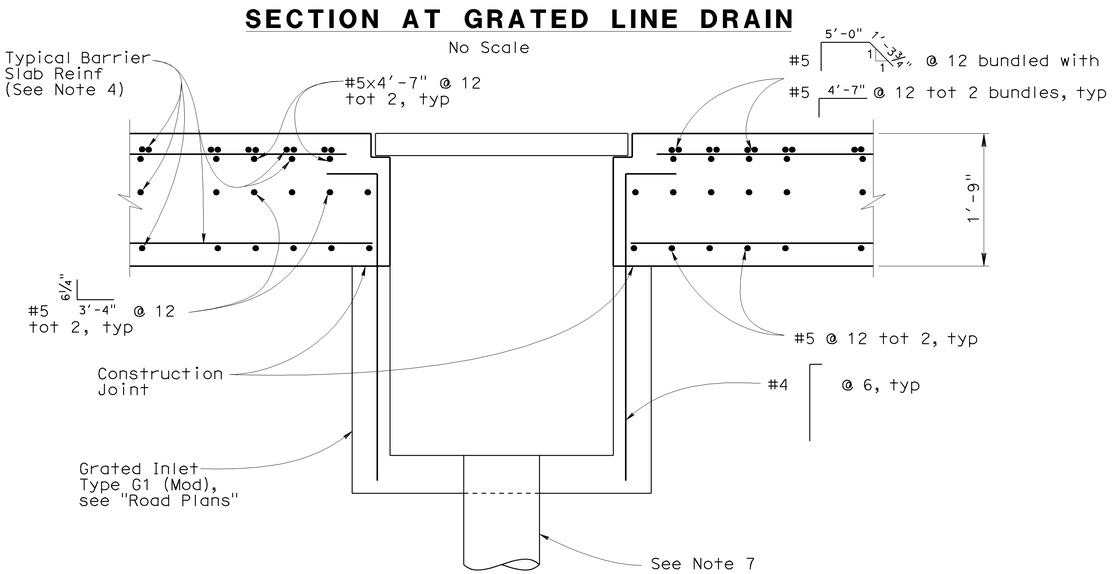

SECTION A-A

No Scale

LEGEND

Indicates bundled bars

NOTES

1. Clearance to reinforcing steel in concrete barrier to be 1"
2. Not all barrier reinforcement shown
3. No expansion joints in concrete barrier or barrier slab within MSE wall limits
4. For information and reinforcement not shown, see "Typical Section at Barrier Slab" on "Wall Details No. 1" sheet
5. In addition to reinforcement shown, additional reinforcement corresponding in size and number to bars cut by the opening shall be placed half on each side of drainage inlet, as shown in Section A-A
6. Wall manufacturer to provide details where soil reinforcement is interrupted by drainage inlet
7. Locate down drain at vertical panel joint

Sudhakar Vatti
DESIGN OVERSIGHT Sudhakar Vatti
8-10-09
SIGN OFF DATE

	BY	CHECKED
DESIGN	A. Priley	K. Michalski
DETAILS	A. Priley	J. Hermstad
QUANTITIES	A. Priley	J. Wong

PREPARED FOR THE STATE OF CALIFORNIA DEPARTMENT OF TRANSPORTATION

A. Priley
PROJECT ENGINEER

BRIDGE NO. 55E0102
POST MILE 23.2

WALLS NO. 442 & 444
WALL DETAILS NO. 2

DESIGN DETAIL SHEET (ENGLISH) (REV. 2/25/05)

ORIGINAL SCALE IN INCHES FOR REDUCED PLANS 0 1 2 3

CU 12235
EA 071631

DISREGARD PRINTS BEARING EARLIER REVISION DATES

REVISION DATES (PRELIMINARY STAGE ONLY) 04/06/09 06/05/09 07/27/09

SHEET 13 OF 27

FILE => 55-e0102-g-wdt02.dgn

USERNAME => trcarol DATE PLOTTED => 04-FEB-2010 TIME PLOTTED => 10:24

DIST	COUNTY	ROUTE	POST MILES TOTAL PROJECT	SHEET No	TOTAL SHEETS
12	Ora	22,405, 605	R0.3/R0.9, 22.3/24.0,3.0/R1.6	1807	1929

REGISTERED CIVIL ENGINEER — DATE 07-27-09

2-1-10
PLANS APPROVAL DATE

REGISTERED PROFESSIONAL ENGINEER — A. Priley — No. C 73375 — Exp. 12-31-10 — CIVIL — STATE OF CALIFORNIA

The State of California or its officers or agents shall not be responsible for the accuracy or completeness of electronic copies of this plan sheet.

OCTA
550 SOUTH MAIN STREET
ORANGE, CA 92863

TRC
21 TECHNOLOGY DR
IRVINE, CA 92618

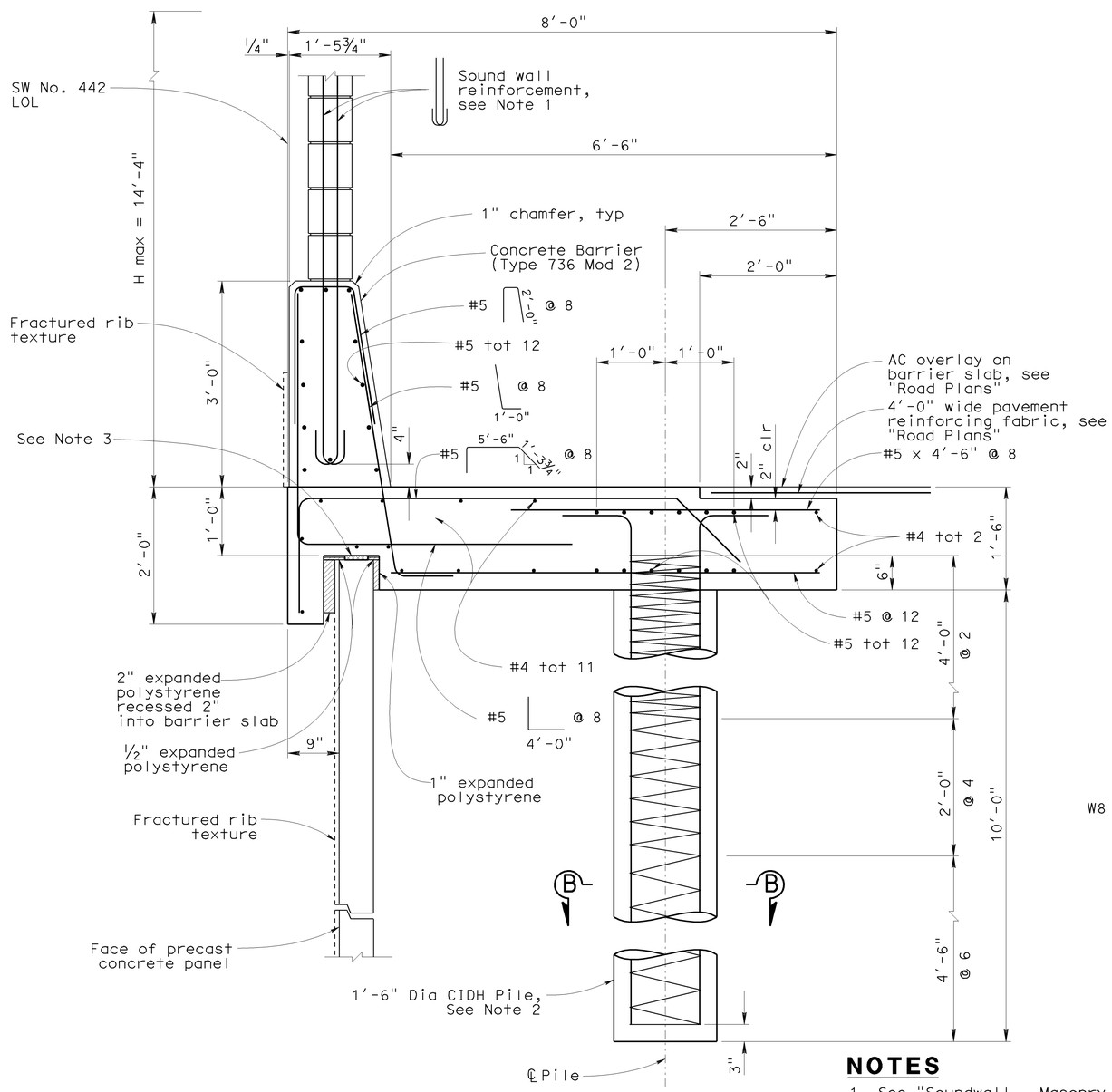

TYPICAL SECTION AT BARRIER SLAB WITH SOUND WALL

No Scale

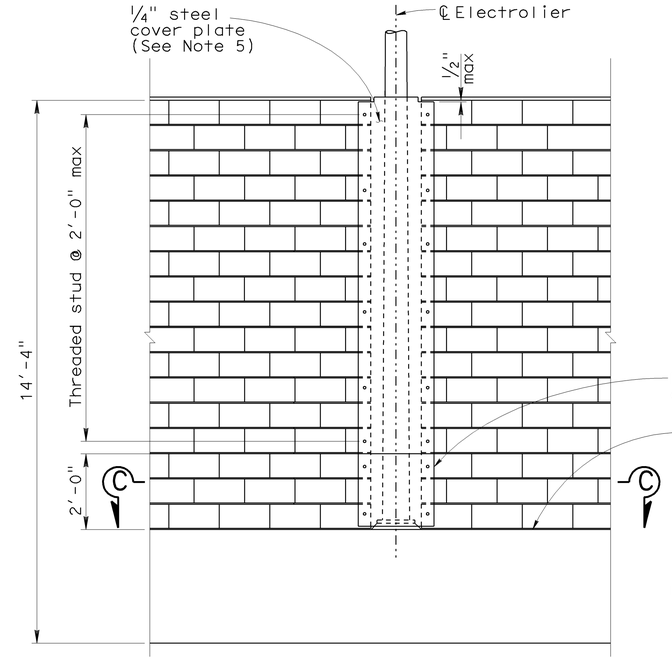

SOUND WALL ELEVATION AT ELECTROLIER

No Scale

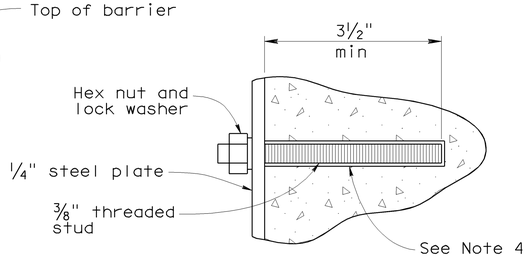

THREADED STUD ANCHORAGE

No Scale

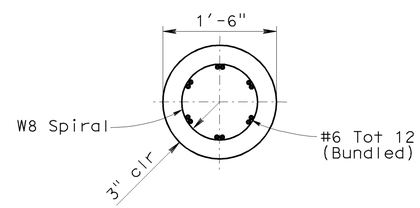

SECTION B-B

No Scale

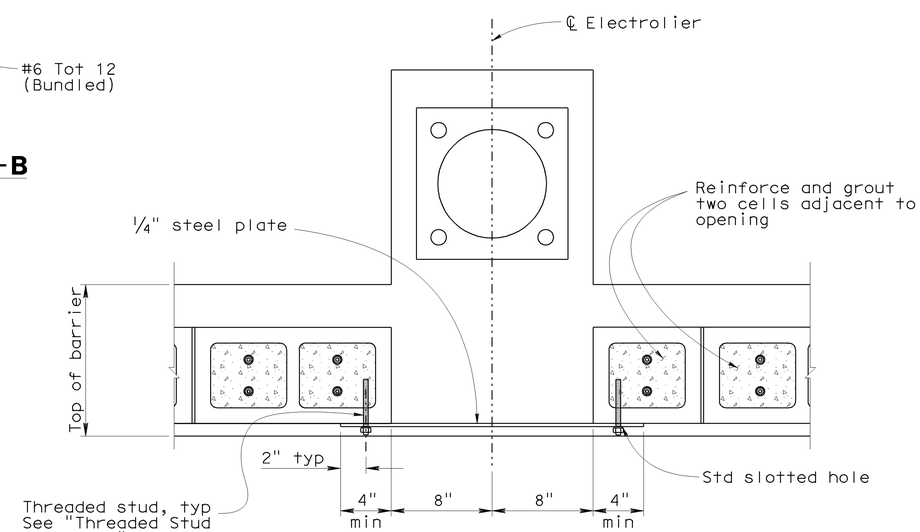

SECTION C-C

No Scale

NOTES

1. See "Soundwall - Masonry Block with Barrier on Retaining Wall" sheets for size and spacing of sound wall reinforcement
2. For spacing of CIDH piles, see "Structure Plan No. 1" and "Structure Plan No. 2" sheets
3. Five 3/4" x 4" x 6" elastomeric bearing pads bonded to top of MSE panel
4. Anchor threaded stud into drilled hole with epoxy adhesive in accordance with manufacturer recommendations
5. Paint steel plate to match color of block wall

Sudhakar Vatti
DESIGN OVERSIGHT — Sudhakar Vatti
8-10-09
SIGN OFF DATE

	BY	CHECKED
DESIGN	A. Priley	K. Michalski
DETAILS	A. Priley	J. Hermstad
QUANTITIES	A. Priley	J. Wong

PREPARED FOR THE STATE OF CALIFORNIA DEPARTMENT OF TRANSPORTATION

A. Priley
PROJECT ENGINEER

BRIDGE NO. 55E0102
POST MILE 23.2

WALLS NO. 442 & 444
WALL DETAILS NO. 3

DESIGN DETAIL SHEET (ENGLISH) (REV. 2/25/05)

ORIGINAL SCALE IN INCHES FOR REDUCED PLANS 0 1 2 3

CU 12235
EA 071631

DISREGARD PRINTS BEARING EARLIER REVISION DATES — REVISION DATES (PRELIMINARY STAGE ONLY) 04/06/09 06/08/09 07/27/09

SHEET 14 OF 27

FILE => 55-e0102-g-wdt03.dgn

USERNAME => rtcarol DATE PLOTTED => 04-FEB-2010 TIME PLOTTED => 10:24

DIST	COUNTY	ROUTE	POST MILES TOTAL PROJECT	SHEET No	TOTAL SHEETS
12	Ora	22,405, 605	R0.3/R0.9, 22.3/24.0,3.0/R1.6	1808	1929

REGISTERED CIVIL ENGINEER 07-27-09 DATE

2-1-10
PLANS APPROVAL DATE

REGISTERED PROFESSIONAL ENGINEER A. Priley No. C 73375 Exp. 12-31-10 CIVIL STATE OF CALIFORNIA

The State of California or its officers or agents shall not be responsible for the accuracy or completeness of electronic copies of this plan sheet.

OCTA
550 SOUTH MAIN STREET
ORANGE, CA 92863

TRC
21 TECHNOLOGY DR
IRVINE, CA 92618

TOP OF WALL ELEVATIONS

RW 442 LOL Station	Top of Wall Elevation (ft)
1+00.00	47.97
1+12.50	47.53
1+25.00	47.03
1+37.50	46.61
1+50.00	46.16
1+62.50	45.69
1+75.00	45.16
1+87.50	44.57
2+00.00	43.98
2+12.50	43.36
2+25.00	42.73
2+37.50	42.10
2+50.00	41.40
2+62.50	40.78
2+75.00	40.10
2+87.50	39.41
3+00.00	38.70
3+12.50	38.02
3+25.00	37.29
3+37.50	36.55
3+50.00	35.77
3+62.50	35.00
3+75.00	34.20
3+87.50	33.39
4+00.00	32.57
4+12.50	31.76
4+25.00	30.95
4+37.50	30.16
4+50.00	29.39
4+62.50	28.61
4+75.00	27.85
4+87.50	27.11
4+90.00	26.95

RW 444 LOL Station	Top of Wall Elevation (ft)
1+00.00	45.87
1+12.50	45.41
1+25.00	44.94
1+37.50	44.47
1+50.00	43.98
1+62.50	43.48
1+75.00	42.98
1+87.50	42.47
2+00.00	41.95
2+12.50	41.42
2+25.00	40.89
2+37.50	40.35
2+50.00	39.79
2+62.50	39.22
2+75.00	38.63
2+87.50	38.05
3+00.00	37.45
3+12.50	36.84
3+25.00	36.21
3+37.50	35.58
3+50.00	34.94
3+62.50	34.29
3+75.00	33.63
3+87.50	32.95
4+00.00	32.27
4+12.50	31.61
4+25.00	30.96
4+37.50	30.32
4+50.00	29.70
4+62.50	29.09
4+75.00	28.50
4+87.50	27.93
5+00.00	27.36

RW 444 LOL Station	Top of Wall Elevation (ft)
5+12.50	26.80
5+25.00	26.25
5+37.50	25.72
5+50.00	25.19
5+62.50	24.68
5+75.00	24.19
5+87.50	23.71
6+00.00	23.25
6+12.50	22.80
6+25.00	22.37
6+37.50	21.95
6+50.00	21.54
6+62.50	21.15
6+75.00	20.77
6+87.50	20.41
7+00.00	20.06
7+12.50	19.73
7+25.00	19.41
7+37.50	19.10
7+50.00	18.82

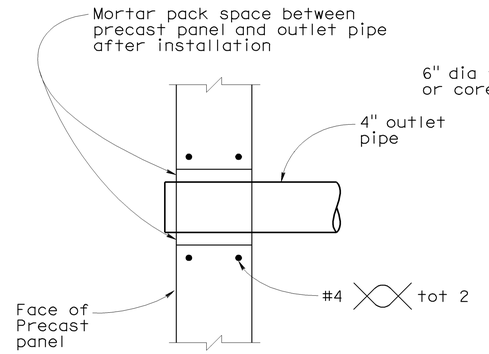

SECTION

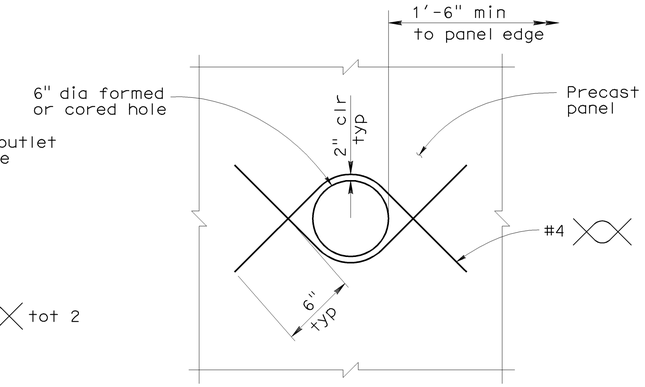

ELEVATION

Note: Typical panel reinforcement not shown

OUTLET DETAIL

No Scale

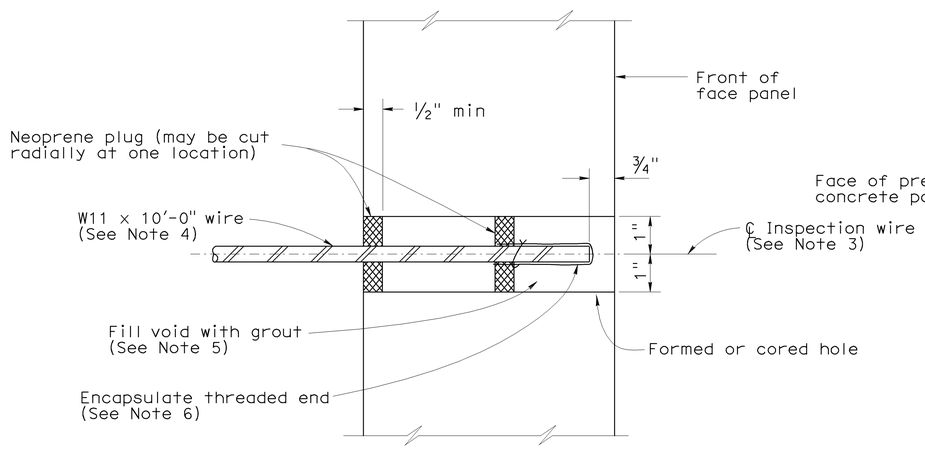

SECTION THRU INSPECTION WIRE

No Scale

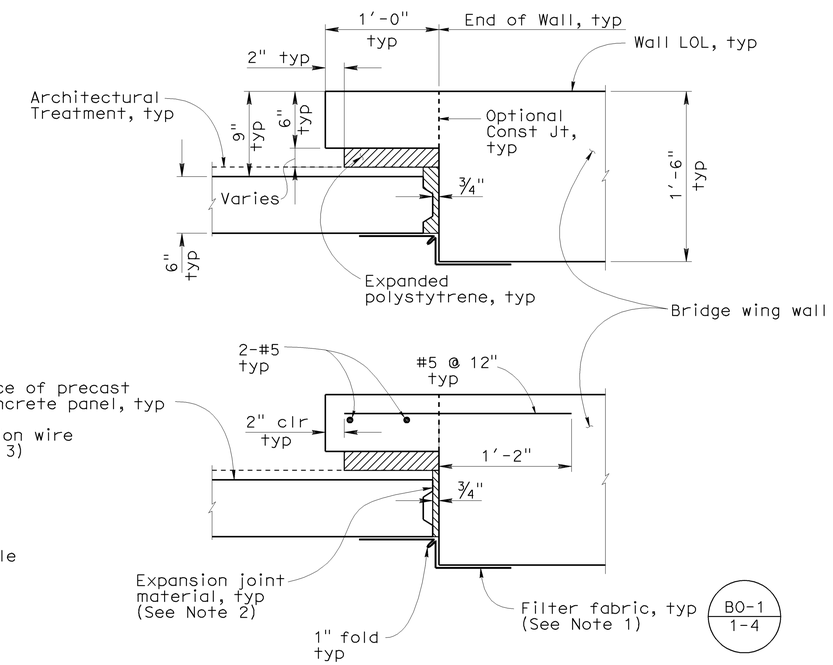

PRECAST PANEL TO CONCRETE WALL JOINT DETAILS

No Scale

NOTES

1. Bond a strip of filter fabric, 1'-6" wide, to back of precast concrete panels and the adjacent concrete wall for entire length of vertical joint
2. Bond expansion joint material to the concrete wall
3. Center inspection wire in panel
4. Fabricate inspection wires from W11 wire representative of the welded wire mats, with ⅜" dia - 16 UNC threads (Unified Coarse threads) for at least 1½" of one end
5. Place inspection wire horizontal and perpendicular to the wall panel prior to backfilling. After backfill placement to a level at least 2'-0" above the inspection wire, dry pack opening with 1000 to 1500 psi mortar. Trowel mortar smooth and flush with face of panel
6. Encapsulate threaded end with corrosion inhibiting mastic and secure round vinyl cover with nylon tie

DESIGN OVERSIGHT Sudhakar Vatti
8-10-09
SIGN OFF DATE

	BY	CHECKED
DESIGN	A. Priley	K. Michalski
DETAILS	A. Priley	J. Hermstad
QUANTITIES	A. Priley	J. Wong

PREPARED FOR THE STATE OF CALIFORNIA DEPARTMENT OF TRANSPORTATION

A. Priley
PROJECT ENGINEER

BRIDGE NO. 55E0102
POST MILE 23.2

WALLS NO. 442 & 444
WALL DETAILS NO. 4

DESIGN DETAIL SHEET (ENGLISH) (REV. 2/25/05)

ORIGINAL SCALE IN INCHES FOR REDUCED PLANS 0 1 2 3

CU 12235
EA 071631

DISREGARD PRINTS BEARING EARLIER REVISION DATES

REVISION DATES (PRELIMINARY STAGE ONLY) 04/06/09 06/08/09 07/27/09

SHEET 15 OF 27

FILE => 55-e0102-g-wdt04.dgn

USERNAME => rtrcarol DATE PLOTTED => 04-FEB-2010 TIME PLOTTED => 10:31

DIST	COUNTY	ROUTE	POST MILES TOTAL PROJECT	SHEET No	TOTAL SHEETS
12	Ora	22,405, 605	R0.3/R0.9, 22.3/24.0,3.0/R1.6	1809	1929

REGISTERED CIVIL ENGINEER 07-27-09 DATE

2-1-10
PLANS APPROVAL DATE

REGISTERED PROFESSIONAL ENGINEER A. Priley No. C 73375 Exp. 12-31-10 CIVIL STATE OF CALIFORNIA

The State of California or its officers or agents shall not be responsible for the accuracy or completeness of electronic copies of this plan sheet.

OCTA
550 SOUTH MAIN STREET
ORANGE, CA 92863

TRC
21 TECHNOLOGY DR
IRVINE, CA 92618

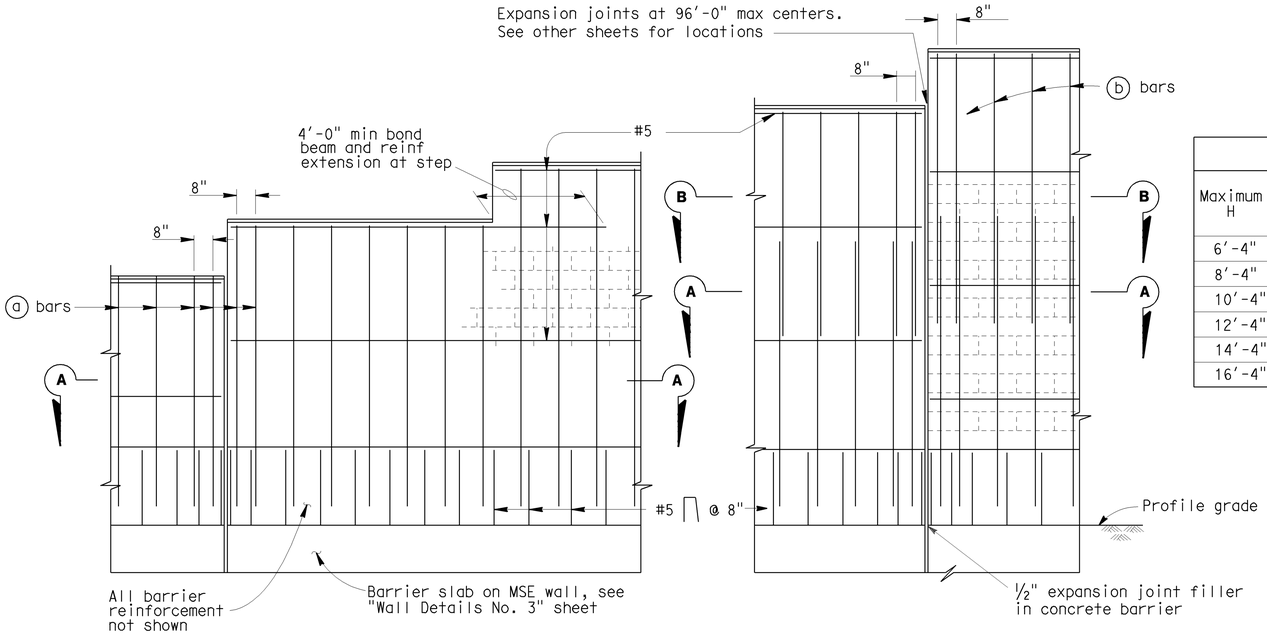

PART ELEVATIONS

SOUNDWALL REINFORCEMENT TABLE

Maximum H	ⓐ bars @ 1'-4" max	ⓑ bars @ 1'-4" max	"y"	f'm (KSI)	Compressive Strength of CMU (KSI)	Maximum H
6'-4"	# 4	——	——	1.5	1.9	6'-4"
8'-4"	# 4	——	——	1.5	1.9	8'-4"
10'-4"	# 4	——	——	1.5	1.9	10'-4"
12'-4"	# 5	# 4	5'-0"	1.5	1.9	12'-4"
14'-4"	# 6	# 4	7'-0"	1.5	1.9	14'-4"
16'-4"	# 6	# 4	9'-0"	2.5	3.7	16'-4"

Note I : For details not shown,see "SOUNDWALL WITH BARRIER ON RETAINING WALL - MASONRY BLOCK -- DETAILS NO.2" sheet.

Note II : Slope ground at traffic side of barrier to drain. Maximum slope ±10%.

Note III: See Std Plan B15-9 for other details

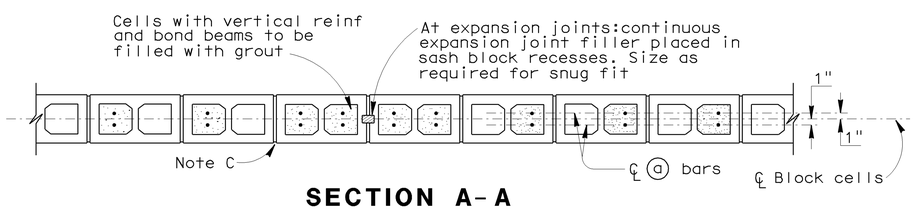

SECTION A-A

For details not shown,see other details

H=6'-4" THRU H=10'-4"

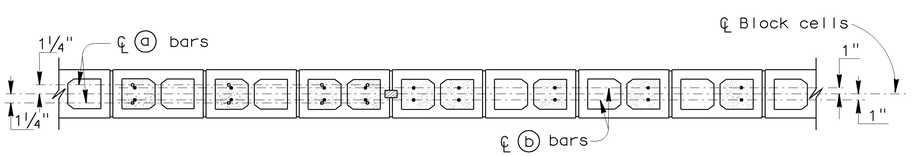

SECTION A-A

SECTION B-B

For details not shown,see other details

H=12'-4" THRU H=16'-4"

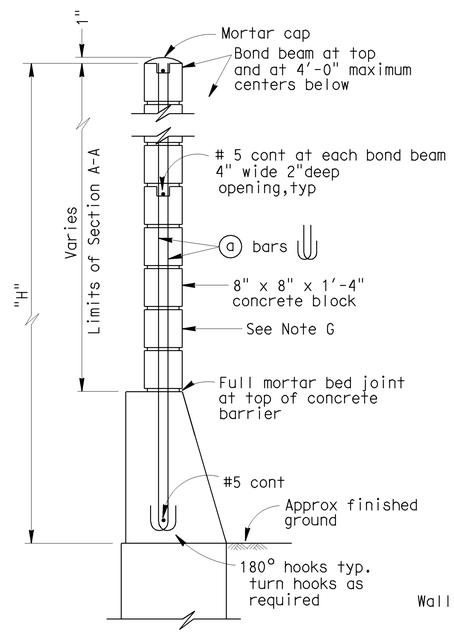

H=6'-4" THRU H=10'-4"

For details not shown,see H=12'-4" thru H=16'-4"

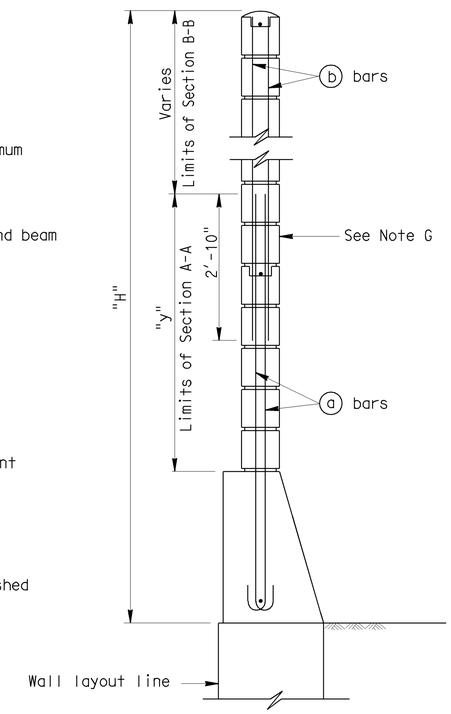

H=12'-4" THRU H=16'-4"

For details not shown,see H=6'-4" thru H=10'-4"

TYPICAL SECTIONS

GENERAL NOTES

Note A: For type of block and joint finish, see other sheets.

Note B: When blocks are laid in stacked bond, ladder type, galvanized joint reinforcement shall be provided. A minimum of 0.07"-0.14" wire continuous at 4'-0" maximum to be used. Locate reinforcement in joints that are at the approximate midpoint between bond beams.

Note C: Horizontal joints shall be tooled concave or may be weathered.
Vertical joints shall be tooled concave or may be raked.

Note D: For intermediate wall heights that are between the "H's" given. Use the tabular information for the next higher "H".

Note E: Masonry strengths are listed in "SOUNDWALL REINFORCEMENT TABLE".

Note F: Concrete to be used for the barrier shall contain not less than 590 pounds of cementitious material per cubic yard.

Note G: For masonry block details and aesthetics, see "Road Plans".

Sudhakar Vatti
DESIGN OVERSIGHT Sudhakar Vatti
8-10-09
SIGN OFF DATE

	BY	CHECKED
DESIGN	A. Priley	K. Michalski
DETAILS	A. Priley	J. Hermstad
QUANTITIES	A. Priley	J. Wong

PREPARED FOR THE STATE OF CALIFORNIA DEPARTMENT OF TRANSPORTATION

A. Priley
PROJECT ENGINEER

BRIDGE NO. 55E0102
POST MILE 23.2

WALLS NO. 442 & 444

SOUNDWALL - MASONRY BLOCK WITH BARRIER ON RETAINING WALL DETAILS NO. 1

DESIGN DETAIL SHEET (ENGLISH) (REV. 2/25/05)

ORIGINAL SCALE IN INCHES FOR REDUCED PLANS 0 1 2 3

CU 12235
EA 071631

DISREGARD PRINTS BEARING EARLIER REVISION DATES

REVISION DATES (PRELIMINARY STAGE ONLY) 04/06/09 07/27/09

SHEET 16 OF 27

FILE => 55-e0102-g-wdt05.dgn

USERNAME => trcarol DATE PLOTTED => 04-FEB-2010 TIME PLOTTED => 10:24

DIST	COUNTY	ROUTE	POST MILES TOTAL PROJECT	SHEET No	TOTAL SHEETS
12	Ora	22,405, 605	R0.3/R0.9, 22.3/24.0,3.0/R1.6	1810	1929

REGISTERED CIVIL ENGINEER 07-27-09 DATE

2-1-10
PLANS APPROVAL DATE

REGISTERED PROFESSIONAL ENGINEER A. Priley No. C 73375 Exp. 12-31-10 CIVIL STATE OF CALIFORNIA

The State of California or its officers or agents shall not be responsible for the accuracy or completeness of electronic copies of this plan sheet.

OCTA
550 SOUTH MAIN STREET
ORANGE, CA 92863

TRC
21 TECHNOLOGY DR
IRVINE, CA 92618

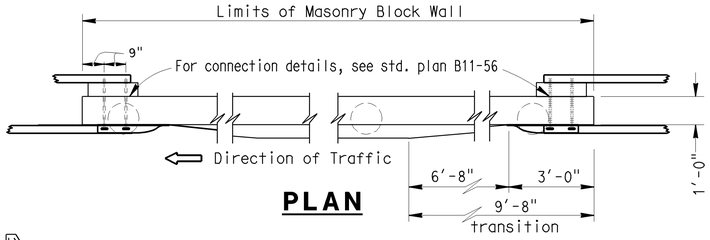

PLAN

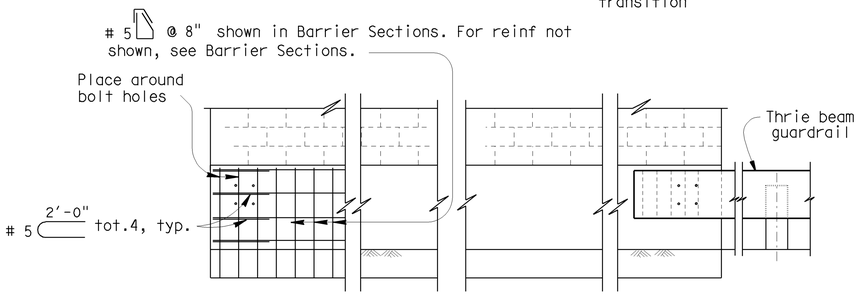

ELEVATION
METAL BEAM GUARDRAIL ANCHORAGE

For details not shown, see std. plan B11-56.

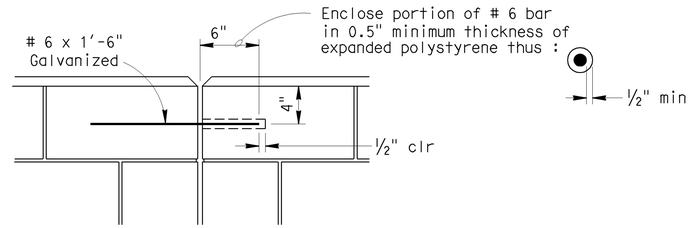

DETAIL A

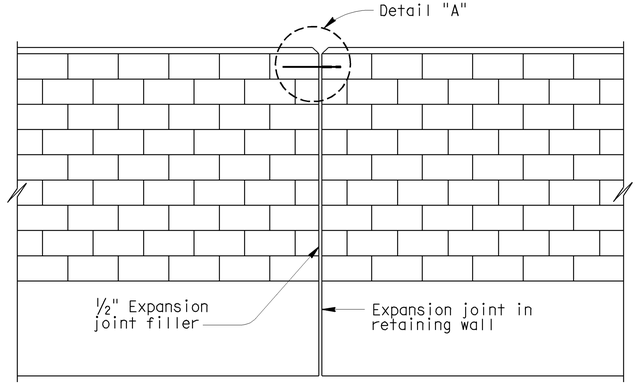

ALIGNMENT KEY DETAIL

NOTES:

I : For details not shown,see "Wall Details No. 3" sheet

II : Slope ground at traffic side of barrier to drain. Maximum slope ±10%. See Standard Plan B11-56, Note D.

DESIGN NOTES

DESIGN

Uniform Building Code,1997 Edition and the Bridge Design Specifications.

DESIGN WIND LOAD

33 PSF

DESIGN SEISMIC LOAD

0.57 Dead load

REINFORCED CONCRETE

f'c = 3250 PSI
fy = 60 KSI

CONCRETE MASONRY

REGULAR STRENGTH	HIGH STRENGTH	
f'm = 1500 PSI	f'm = 2000 PSI	f'm = 2500 PSI
f_b = 1500 PSI	f_b = 660 PSI	f_b = 830 PSI
fs = 24.0 KSI	fs = 24.0 KSI	fs = 24000 PSI
n = 25.8	n = 19.3	n = 15.5

LOAD FACTORS AND LOAD COMBINATIONS

Working Stress Design (WSD) Percentage of unit stress

Group 1: D + E + SC 100%
Group 2: D + W + SC + E 100%
Group 3: D + 0.71 EQD + E 100%

Where:

D = Dead load
E = Lateral earth pressure
SC = Live load surcharge
W = Wind load
EQD = Seismic dead load

Load Factor Design (LFD)

Group A: βD +1.7 E + 1.7 SC
Group B: βD +1.7 E + 1.3 W
Group C: βD +1.3 E + 1.0 EQE
Group D: βD +1.3 E + 1.0 EQD
Group E: βD +1.1 E + 0.85 (EQE + EQD)

Where : β = 0.9 or 1.2, whichever controls in design
D = Dead load
E = Lateral earth pressure
SC = Live load surcharge
W = Wind load
EQD = Seismic dead load
EQE = Seismic earth load

STRENGTH REDUCTION FACTORS, Ø

Reinforced concrete:
For flexure _____ Ø=0.90
For shear _____ Ø=0.85

Concrete masonry:
For flexure _____ Ø=0.80
For shear _____ Ø=0.60

Foundations :

See "Index to Plans" sheet.

Sudhakar Vatti
DESIGN OVERSIGHT Sudhakar Vatti
8-10-09
SIGN OFF DATE

	BY	CHECKED
DESIGN	A. Priley	K. Michalski
DETAILS	A. Priley	J. Hermstad
QUANTITIES	A. Priley	J. Wong

PREPARED FOR THE STATE OF CALIFORNIA DEPARTMENT OF TRANSPORTATION

A. Priley
PROJECT ENGINEER

BRIDGE NO. 55E0102
POST MILE 23.2

WALLS NO. 442 & 444
SOUNDWALL - MASONRY BLOCK WITH BARRIER ON RETAINING WALL DETAILS NO. 2

DESIGN DETAIL SHEET (ENGLISH) (REV. 2/25/05)

ORIGINAL SCALE IN INCHES FOR REDUCED PLANS 0 1 2 3

CU 12235
EA 071631

DISREGARD PRINTS BEARING EARLIER REVISION DATES

REVISION DATES (PRELIMINARY STAGE ONLY) 06/05/09 07/27/09

SHEET 17 OF 27

FILE => 55-e0102-g-wdt06.dgn

USERNAME => rrcarol DATE PLOTTED => 04-FEB-2010 TIME PLOTTED => 10:25

DIST	COUNTY	ROUTE	POST MILES TOTAL PROJECT	SHEET No	TOTAL SHEETS
12	Ora	22, 405, 605	R0.3/R0.9, 22.3/24.0,3.0/R1.6	1811	1929

LICENSED LANDSCAPE ARCHITECT

2-1-10
PLANS APPROVAL DATE

The State of California or its officers or agents shall not be responsible for the accuracy or completeness of electronic copies of this plan sheet.

LICENSED LANDSCAPE ARCHITECT CATHY L. JOHNSON NO. 4545 01-31-10 Renewal Date 07-27-09 Date STATE OF CALIFORNIA

OCTA
550 SOUTH MAIN STREET
ORANGE, CA 92863

RBF CONSULTING
14725 ALTON PARKWAY
IRVINE, CA 92618

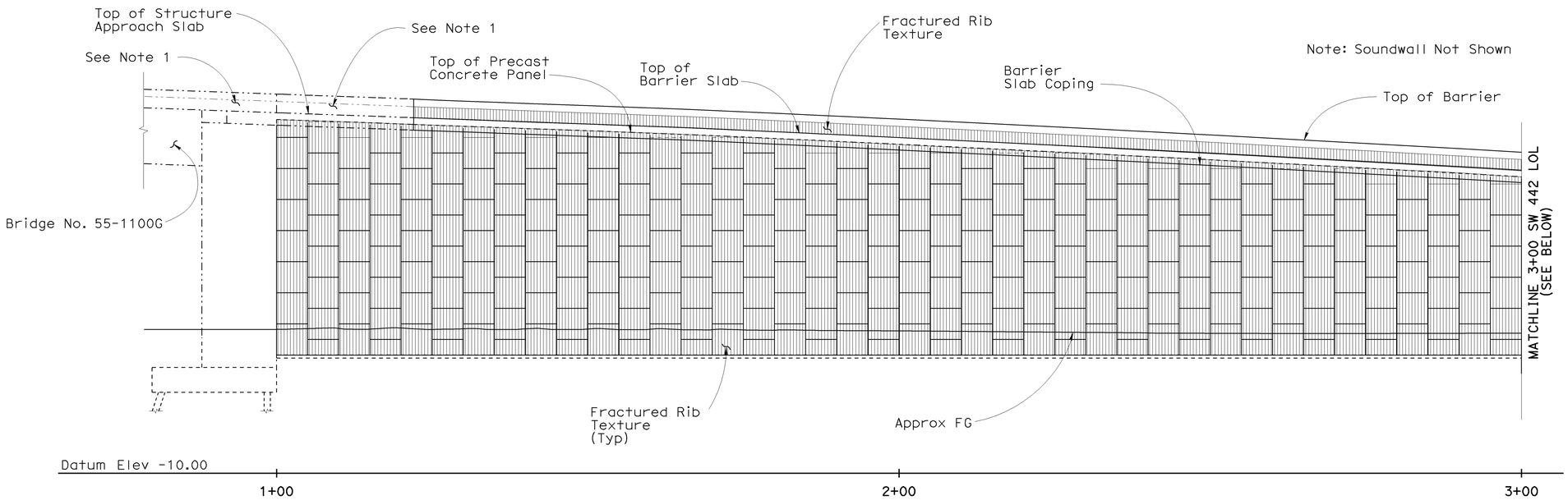

SW NO. 442 MIRROR ELEVATION (SEGMENT 1)

1" = 10'

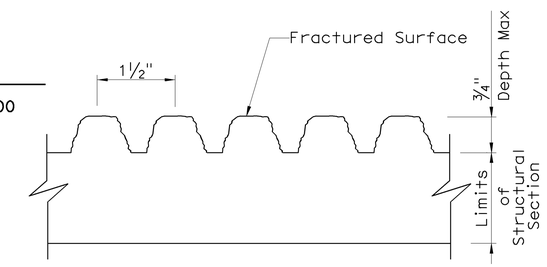

FRACTURED RIB TEXTURE

No Scale

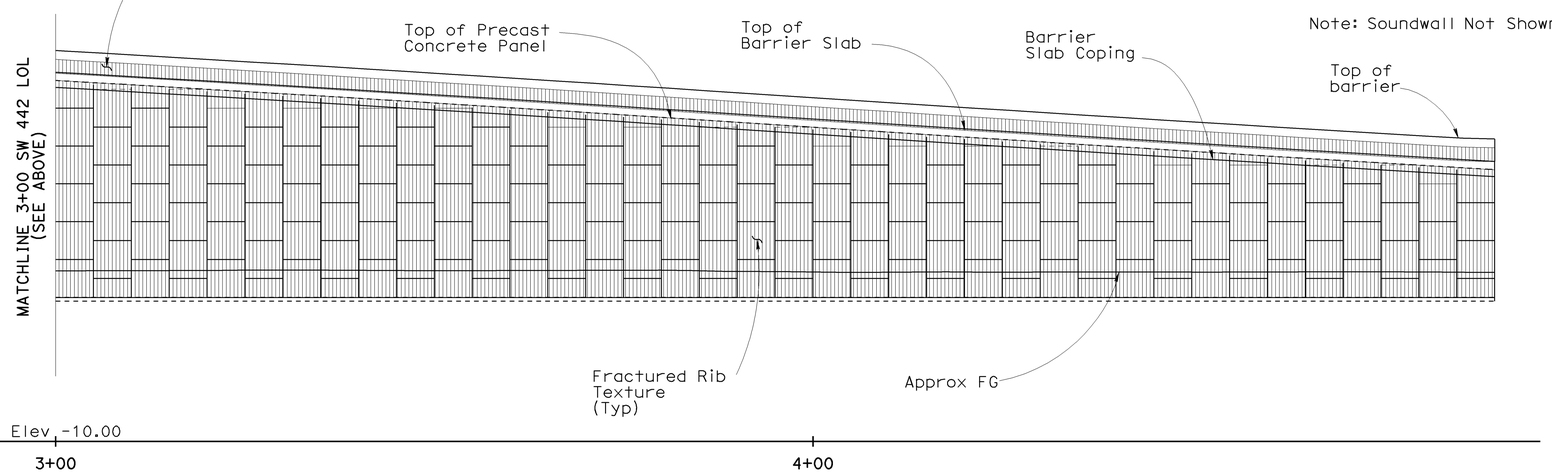

SW NO. 442 MIRROR ELEVATION (SEGMENT 2)

1" = 10'

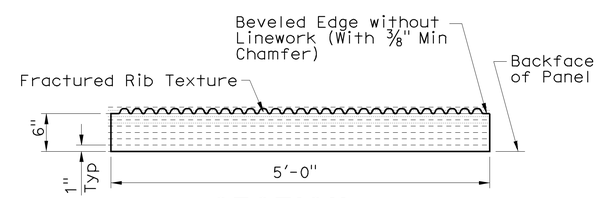

SECTION

1" = 1'-0"

NOTES

1. For Barrier Architectural Texture Not Shown, See "Structure Plans"

Sudhakar Vatti
DESIGN OVERSIGHT Sudhakar Vatti
8-10-09
SIGN OFF DATE

DESIGN DETAIL SHEET (ENGLISH) (REV. 2/25/05)

	BY	CHECKED
DESIGN	C. JOHNSON	A. SU
DETAILS	R. KELCHER	A. SU
QUANTITIES	A. PRILEY	J. WONG

ORIGINAL SCALE IN INCHES FOR REDUCED PLANS 0 1 2 3

PREPARED FOR THE STATE OF CALIFORNIA DEPARTMENT OF TRANSPORTATION

A. PRILEY
PROJECT ENGINEER

CU 12235
EA 071631

BRIDGE NO. 55E0102
POST MILE 23.2

WALLS NO. 442 & 444
ARCHITECTURAL PANEL LAYOUT NO. 1

DISREGARD PRINTS BEARING EARLIER REVISION DATES
REVISION DATES (PRELIMINARY STAGE ONLY) 04/06/09 07/27/09

SHEET 18 OF 27

FILE => 55-e0102-s-arch01.dgn

USERNAME => rrcarol DATE PLOTTED => 04-FEB-2010 TIME PLOTTED => 10:25

DIST	COUNTY	ROUTE	POST MILES TOTAL PROJECT	SHEET No	TOTAL SHEETS
12	Ora	22, 405, 605	R0.3/R0.9, 22.3/24.0,3.0/R1.6	1812	1929

LICENSED LANDSCAPE ARCHITECT

2-1-10
PLANS APPROVAL DATE

LICENSED LANDSCAPE ARCHITECT
CATHY L. JOHNSON
NO. 4545
01-31-10
Renewal Date
07-27-09
Date
STATE OF CALIFORNIA

The State of California or its officers or agents shall not be responsible for the accuracy or completeness of electronic copies of this plan sheet.

OCTA
550 SOUTH MAIN STREET
ORANGE, CA 92863

RBF CONSULTING
14725 ALTON PARKWAY
IRVINE, CA 92618

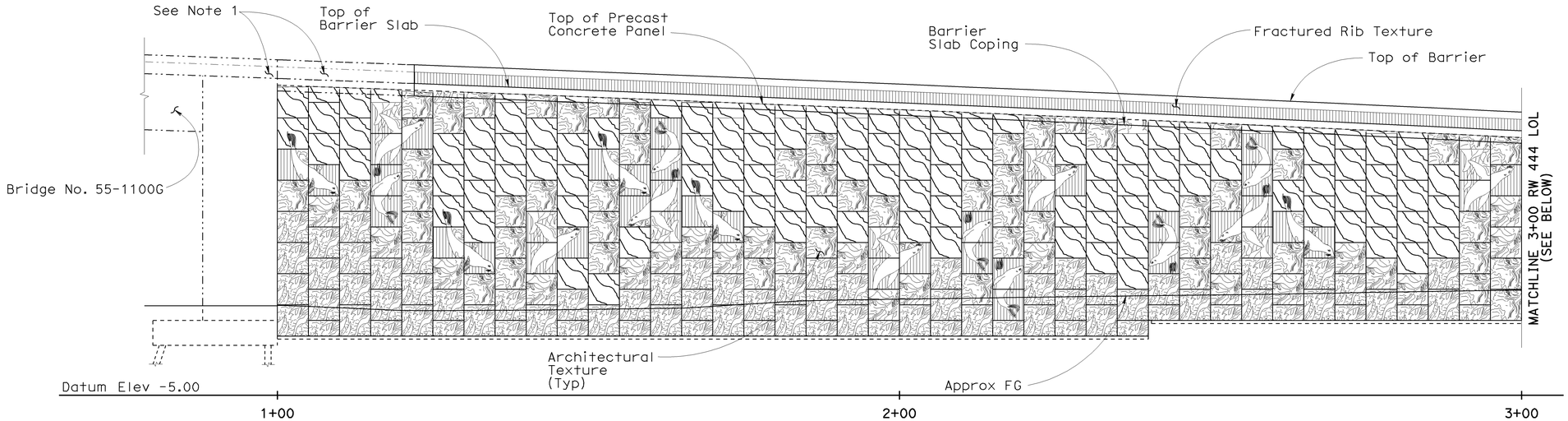

RW NO. 444 DEVELOPED ELEVATION (SEGMENT 1)

1" = 10'

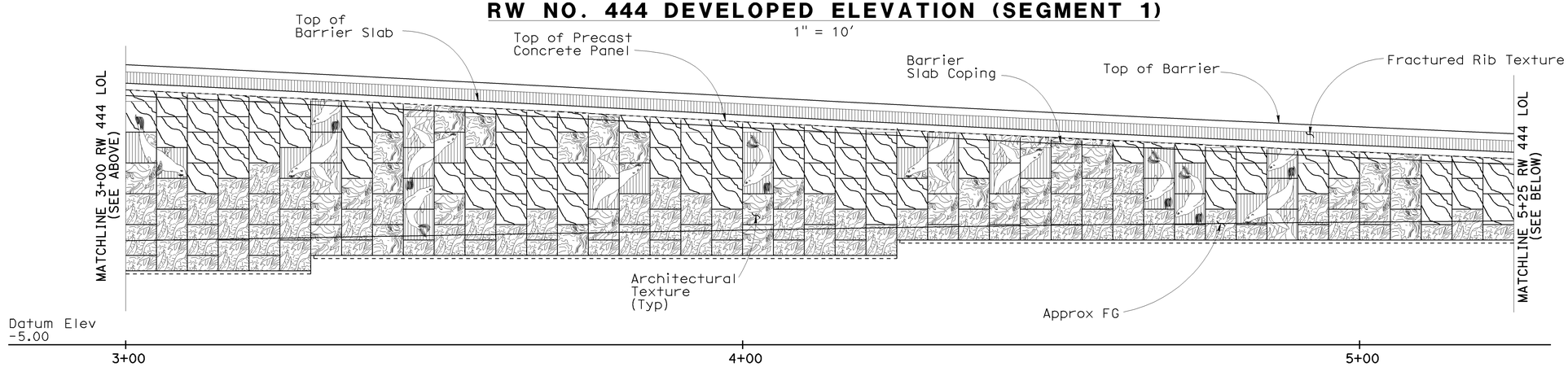

RW NO. 444 DEVELOPED ELEVATION (SEGMENT 2)

1" = 10'

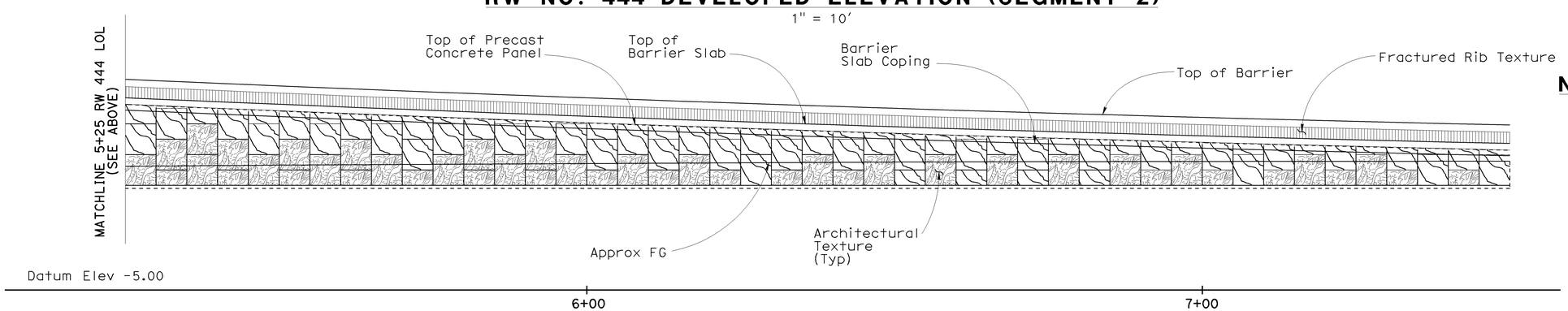

RW NO. 444 DEVELOPED ELEVATION (SEGMENT 3)

1" = 10'

NOTES

1. For Barrier Architectural Texture Not Shown, See "Structure Plans"

Sudhakar Vatti
DESIGN OVERSIGHT Sudhakar Vatti
8-10-09
SIGN OFF DATE

	BY	CHECKED
DESIGN	C. JOHNSON	A. SU
DETAILS	R. KELCHER	A. SU
QUANTITIES	A. PRILEY	J. WONG

PREPARED FOR THE
STATE OF CALIFORNIA
DEPARTMENT OF TRANSPORTATION

A. PRILEY
PROJECT ENGINEER

BRIDGE NO. 55E0102
POST MILE 23.2

WALLS NO. 442 & 444
ARCHITECTURAL PANEL LAYOUT NO. 2

DESIGN DETAIL SHEET (ENGLISH) (REV. 2/25/05)

ORIGINAL SCALE IN INCHES FOR REDUCED PLANS 0 1 2 3

CU 12235
EA 071631

DISREGARD PRINTS BEARING EARLIER REVISION DATES
REVISION DATES (PRELIMINARY STAGE ONLY) 04/06/09 07/21/09

SHEET 19 OF 27

FILE => 55-e0102-s-arch02.dgn

USERNAME => trcarol DATE PLOTTED => 04-FEB-2010 TIME PLOTTED => 10:25

DIST	COUNTY	ROUTE	POST MILES TOTAL PROJECT	SHEET No	TOTAL SHEETS
12	Ora	22,405, 605	R0.3/R0.9, 22.3/24.0,3.0/R1.6	1813	1929

LICENSED LANDSCAPE ARCHITECT

2-1-10
PLANS APPROVAL DATE

LICENSED LANDSCAPE ARCHITECT CATHY L. JOHNSON NO. 4545 STATE OF CALIFORNIA
01-31-10 Renewal Date
07-27-09 Date

The State of California or its officers or agents shall not be responsible for the accuracy or completeness of electronic copies of this plan sheet.

OCTA
550 SOUTH MAIN STREET
ORANGE, CA 92863

RBF CONSULTING
14725 ALTON PARKWAY
IRVINE, CA 92618

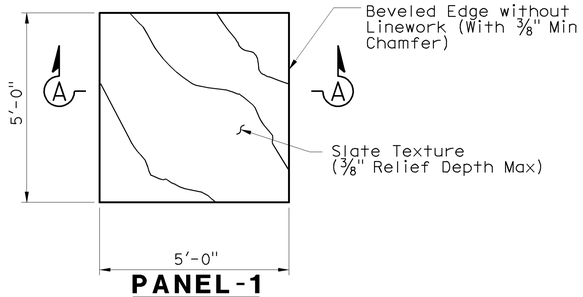

PANEL-1
1/2" = 1'-0"

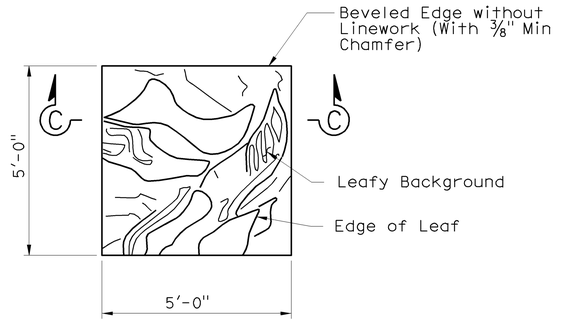

PANEL-3
1/2" = 1'-0"

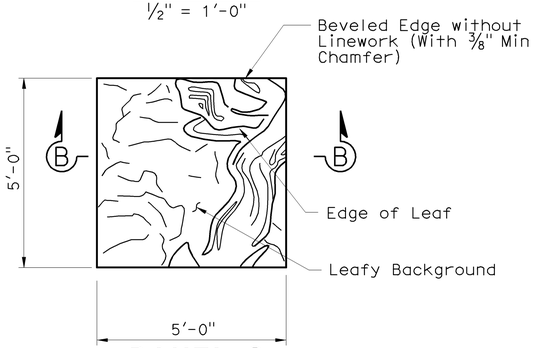

PANEL-2
1/2" = 1'-0"

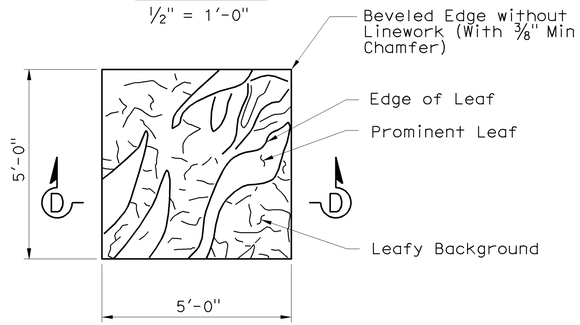

PANEL-4
1/2" = 1'-0"

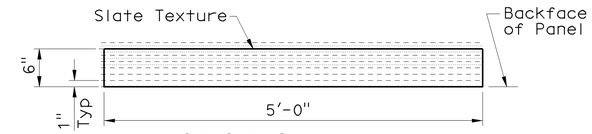

SECTION A-A
1" = 1'-0"

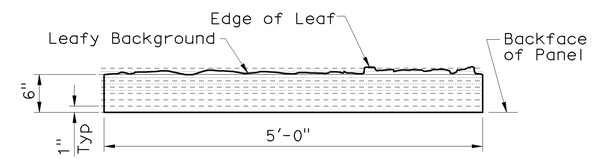

SECTION B-B
1" = 1'-0"

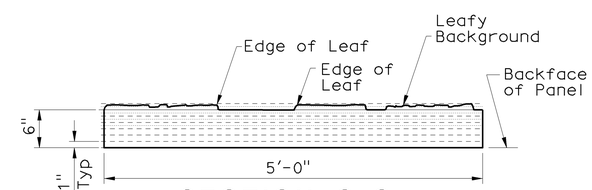

SECTION C-C
1" = 1'-0"

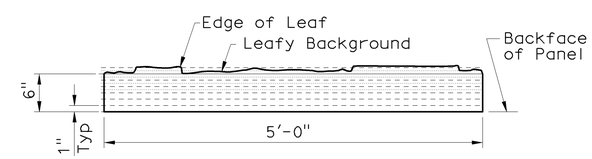

SECTION D-D
1" = 1'-0"

Sudhakar Vatti
DESIGN OVERSIGHT Sudhakar Vatti
8-10-09
SIGN OFF DATE

DESIGN DETAIL SHEET (ENGLISH) (REV. 2/25/05)

	BY	CHECKED
DESIGN	C. JOHNSON	A. SU
DETAILS	R. KELCHER	A. SU
QUANTITIES	A. PRILEY	J. WONG

ORIGINAL SCALE IN INCHES FOR REDUCED PLANS 0 1 2 3

PREPARED FOR THE STATE OF CALIFORNIA DEPARTMENT OF TRANSPORTATION

A. PRILEY
PROJECT ENGINEER

CU 12235
EA 071631

BRIDGE NO. 55E0102
POST MILE 23.2

WALLS NO. 442 & 444
ARCHITECTURAL DETAILS NO. 1

DISREGARD PRINTS BEARING EARLIER REVISION DATES
REVISION DATES (PRELIMINARY STAGE ONLY) 04/06/09 07/27/09

SHEET 20 OF 27

FILE => 55-e0102-s-arch03.dgn

USERNAME => trcarol DATE PLOTTED => 04-FEB-2010 TIME PLOTTED => 10:31

DIST	COUNTY	ROUTE	POST MILES TOTAL PROJECT	SHEET No	TOTAL SHEETS
12	Ora	22,405, 605	R0.3/R0.9, 22.3/24.0,3.0/R1.6	1814	1929

LICENSED LANDSCAPE ARCHITECT

2-1-10
PLANS APPROVAL DATE

LICENSED LANDSCAPE ARCHITECT CATHY L. JOHNSON NO. 4545 01-31-10 Renewal Date 07-27-09 Date STATE OF CALIFORNIA

The State of California or its officers or agents shall not be responsible for the accuracy or completeness of electronic copies of this plan sheet.

OCTA
550 SOUTH MAIN STREET
ORANGE, CA 92863

RBF CONSULTING
14725 ALTON PARKWAY
IRVINE, CA 92618

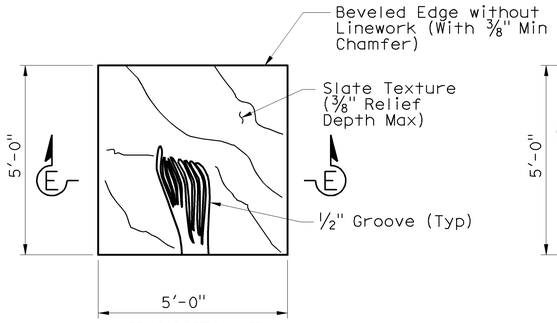

PANEL-5
1/2" = 1'-0"

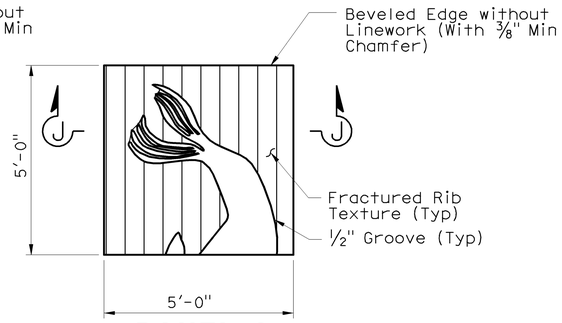

PANEL-9
1/2" = 1'-0"

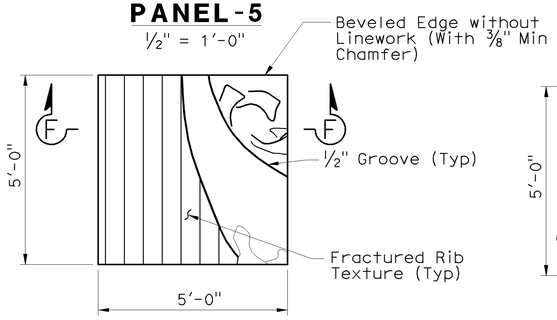

PANEL-6
1/2" = 1'-0"

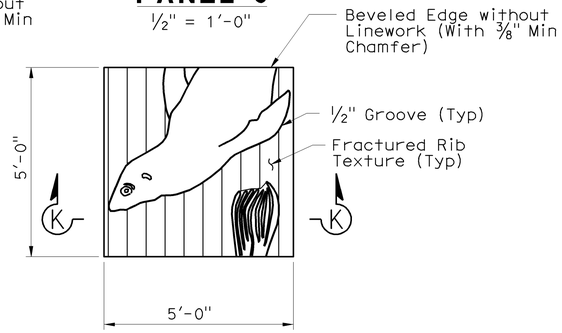

PANEL-10
1/2" = 1'-0"

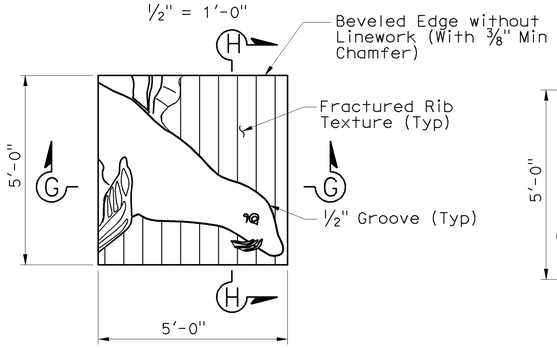

PANEL-7
1/2" = 1'-0"

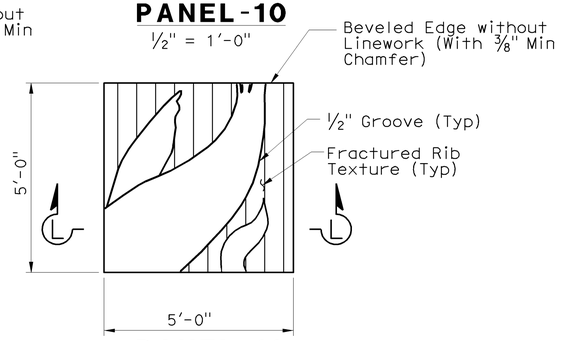

PANEL-11
1/2" = 1'-0"

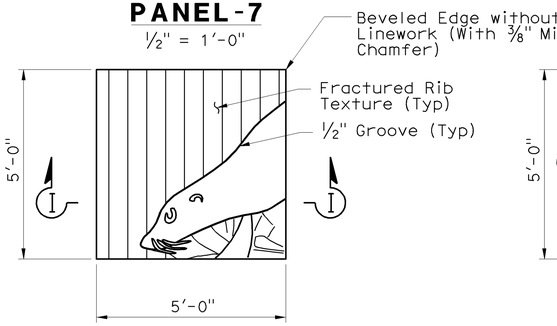

PANEL-8
1/2" = 1'-0"

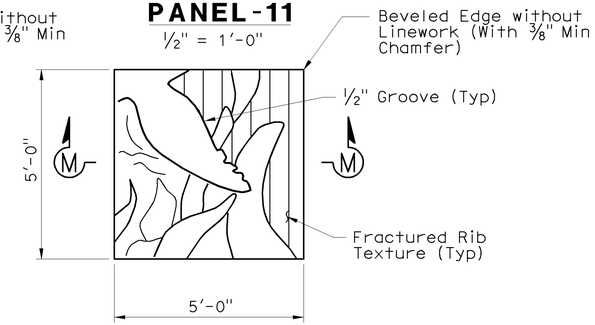

PANEL-12
1/2" = 1'-0"

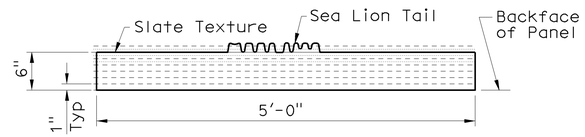

SECTION E-E
1" = 1'-0"

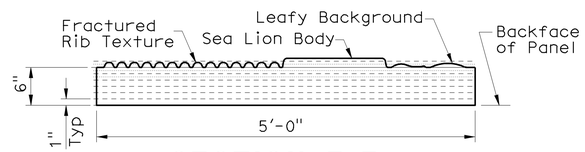

SECTION F-F
1" = 1'-0"

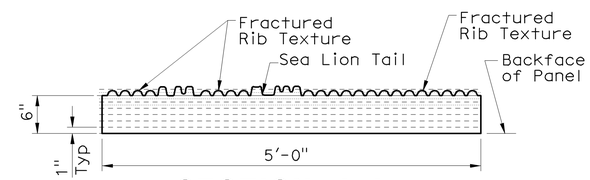

SECTION J-J
1" = 1'-0"

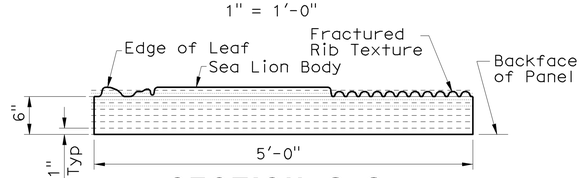

SECTION G-G
1" = 1'-0"

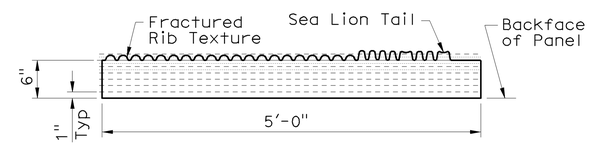

SECTION K-K
1" = 1'-0"

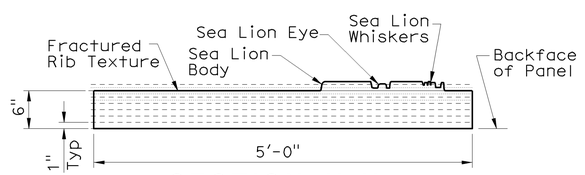

SECTION H-H
1" = 1'-0"

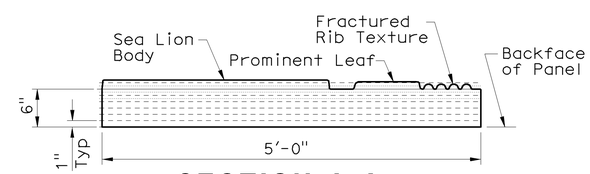

SECTION L-L
1" = 1'-0"

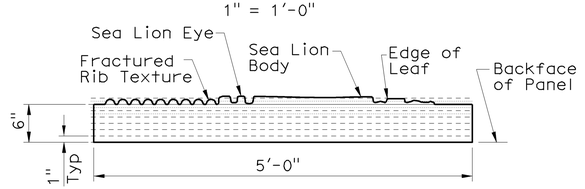

SECTION I-I
1" = 1'-0"

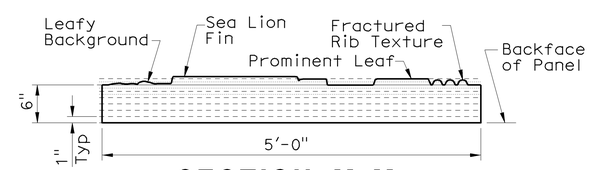

SECTION M-M
1" = 1'-0"

Sudhakar Vatti
DESIGN OVERSIGHT Sudhakar Vatti
8-10-09
SIGN OFF DATE

	BY	CHECKED
DESIGN	C. JOHNSON	A. SU
DETAILS	R. KELCHER	A. SU
QUANTITIES	A. PRILEY	J. WONG

PREPARED FOR THE STATE OF CALIFORNIA DEPARTMENT OF TRANSPORTATION

A. PRILEY
PROJECT ENGINEER

BRIDGE NO. 55E0102
POST MILE 23.2

WALLS NO. 442 & 444
ARCHITECTURAL DETAILS NO. 2

DESIGN DETAIL SHEET (ENGLISH) (REV. 2/25/05)

ORIGINAL SCALE IN INCHES FOR REDUCED PLANS 0 1 2 3

CU 12235
EA 071631

DISREGARD PRINTS BEARING EARLIER REVISION DATES
REVISION DATES (PRELIMINARY STAGE ONLY) 04/06/09 07/27/09

SHEET 21 OF 27

FILE => 55-e0102-s-arch04.dgn

USERNAME => rrcarol DATE PLOTTED => 04-FEB-2010 TIME PLOTTED => 10:25

DIST	COUNTY	ROUTE	POST MILES TOTAL PROJECT	SHEET No	TOTAL SHEETS
12	Ora	22,405, 605	R0.3/R0.9, 22.3/24.0,3.0/R1.6	1815	1929

LICENSED LANDSCAPE ARCHITECT

2-1-10
PLANS APPROVAL DATE

LICENSED LANDSCAPE ARCHITECT
CATHY L. JOHNSON
NO. 4545
01-31-10
Renewal Date
07-27-09
Date
STATE OF CALIFORNIA

The State of California or its officers or agents shall not be responsible for the accuracy or completeness of electronic copies of this plan sheet.

OCTA
550 SOUTH MAIN STREET
ORANGE, CA 92863

RBF CONSULTING
14725 ALTON PARKWAY
IRVINE, CA 92618

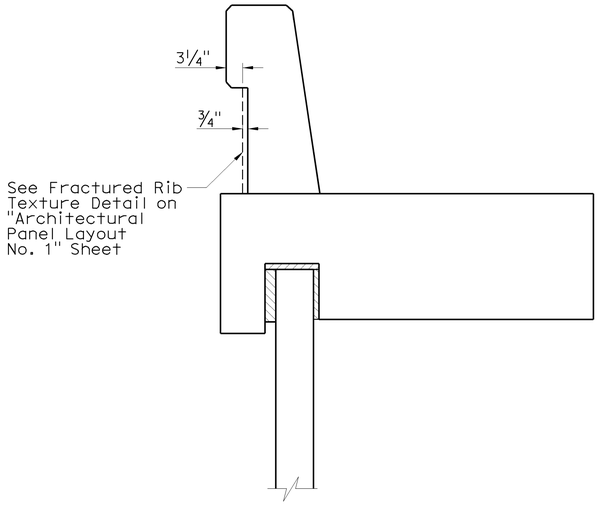

(RW No. 444)
CONCRETE BARRIER (TYPE 736 MOD 1)
No Scale

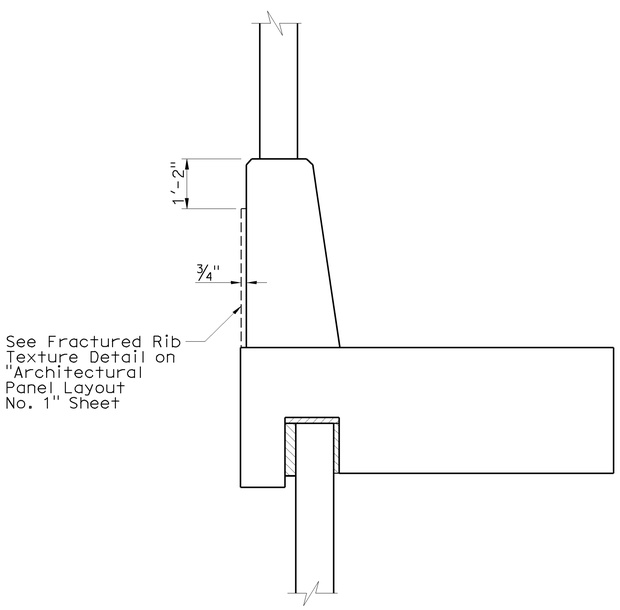

(SW No. 442)
CONCRETE BARRIER (TYPE 736 MOD 2)
No Scale

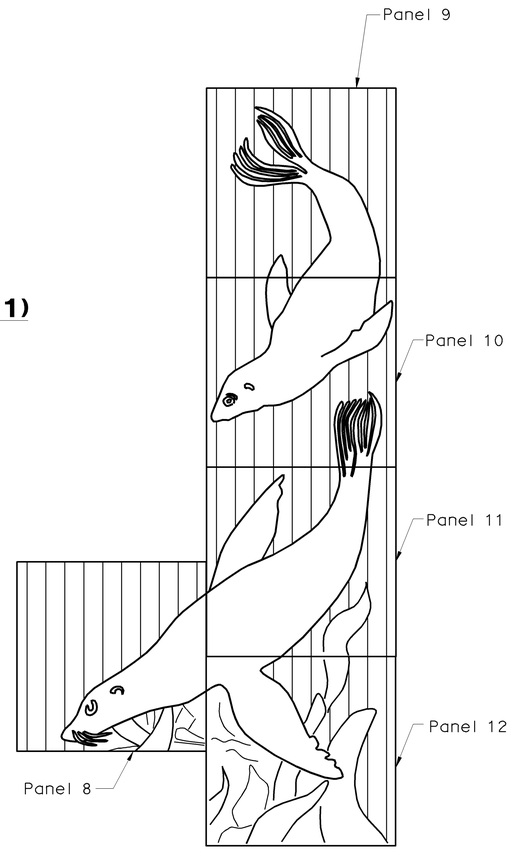

ELEVATION A
No Scale

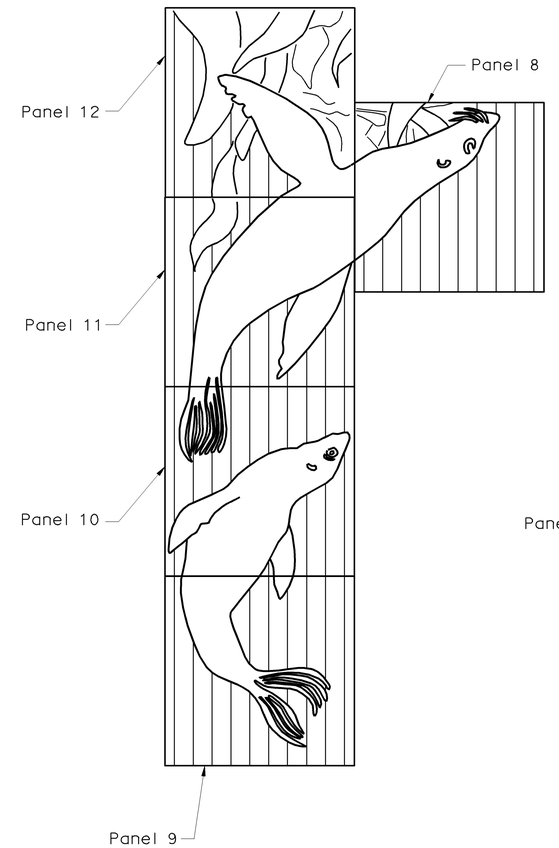

ELEVATION B
No Scale
Note: Rotate "Elevation A" 180°

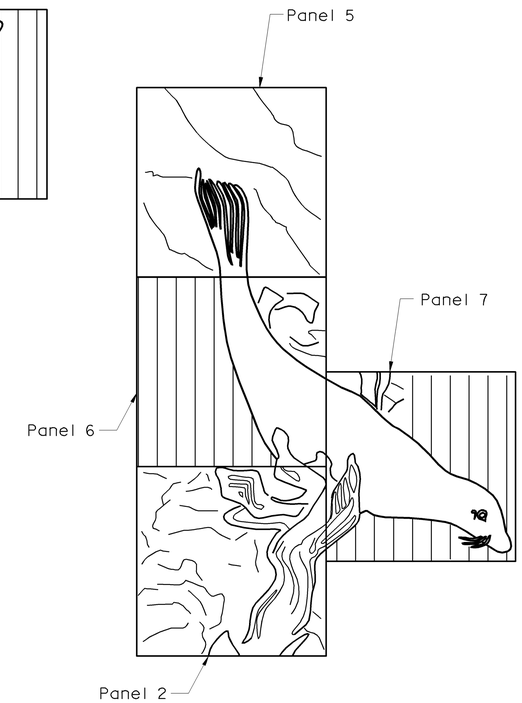

ELEVATION C
No Scale

Sudhakar Vatti
DESIGN OVERSIGHT Sudhakar Vatti
8-10-09
SIGN OFF DATE

	BY	CHECKED
DESIGN	C. JOHNSON	A. SU
DETAILS	R. KELCHER	A. SU
QUANTITIES	A. PRILEY	J. WONG

PREPARED FOR THE STATE OF CALIFORNIA DEPARTMENT OF TRANSPORTATION

A. PRILEY
PROJECT ENGINEER

BRIDGE NO. 55E0102
POST MILE 23.2

WALLS NO. 442 & 444
ARCHITECTURAL DETAILS NO. 3

DESIGN DETAIL SHEET (ENGLISH) (REV. 2/25/05)

ORIGINAL SCALE IN INCHES FOR REDUCED PLANS 0 1 2 3

CU 12235
EA 071631

DISREGARD PRINTS BEARING EARLIER REVISION DATES
REVISION DATES (PRELIMINARY STAGE ONLY) 04/06/09 07/27/09

SHEET 22 OF 27

FILE => 55-e0102-s-arch05.dgn

USERNAME => trcarol DATE PLOTTED => 04-FEB-2010 TIME PLOTTED => 10:25

REFERENCE: CALTRANS SOIL & ROCK LOGGING, CLASSIFICATION, AND PRESENTATION MANUAL (JUNE 2007)

DIST	COUNTY	ROUTE	POST MILES TOTAL PROJECT	SHEET No	TOTAL SHEETS
12	Ora	22,405, 605	R0.3/R0.9, 22.3/24.0,3.0/R1.6	1816	1929

REGISTERED CIVIL ENGINEER 07/27/09 DATE

2-1-10
PLANS APPROVAL DATE

REGISTERED PROFESSIONAL ENGINEER K.Arulmoli No. GE 2090 Exp.12-31-09 GEOTECHNICAL STATE OF CALIFORNIA

The State of California or its officers or agents shall not be responsible for the accuracy or completeness of electronic copies of this plan sheet.

OCTA
550 SOUTH MAIN STREET
ORANGE, CA 92863

EARTH MECHANICS, INC.
17660, NEWHOPE STREET, SUITE E
FOUNTAIN VALLEY, CA 92708

CEMENTATION

Description	Criteria
Weak	Crumbles or breaks with handling or little finger pressure.
Moderate	Crumbles or breaks with considerable finger pressure.
Strong	Will not crumble or break with finger pressure.

CONSISTENCY OF COHESIVE SOILS

Description	Unconfined Compressive Strength (tsf)	Pocket Penetrometer Measurement (tsf)	Torvane Measurement (tsf)	Field Approximation
Very Soft	< 0.25	< 0.25	< 0.12	Easily penetrated several inches by fist
Soft	0.25 to 0.50	0.25 to 0.50	0.12 to 0.25	Easily penetrated several inches by thumb
Medium Stiff	0.50 to 1.0	0.50 to 1.0	0.25 to 0.50	Penetrated several inches by thumb with moderate effort
Stiff	1 to 2	1 to 2	0.50 to 1.0	Readily indented by thumb but penetrated only with great effort
Very Stiff	2 to 4	2 to 4	1.0 to 2.0	Readily indented by thumbnail
Hard	> 4.0	> 4.0	> 2.0	Indented by thumbnail with difficulty

BOREHOLE IDENTIFICATION

Symbol	Hole Type	Description
Size	A	Auger Boring
Size	R P	Rotary drilled boring Rotary percussion boring (air)
Size	R	Rotary drilled diamond core
Size	HD HA	Hand driven (1-inch soil tube) Hand Auger
●	D	Dynamic Cone Penetration Boring
▲	CPT	Cone Penetration Test (ASTM D 5778-95)
□	O	Other

Note: Size in inches.

PLASTICITY OF FINE-GRAINED SOILS

Description	Criteria
Nonplastic	A 1/8-inch thread cannot be rolled at any water content.
Low	The thread can barely be rolled and the lump cannot be formed when drier than the plastic limit.
Medium	The thread is easy to roll and not much time is required to reach the plastic limit. The thread cannot be rerolled after reaching the plastic limit. The lump crumbles when drier than the plastic limit.
High	It takes considerable time rolling and kneading to reach the plastic limit. The thread can be rerolled several times after reaching the plastic limit. The lump can be formed without crumbling when drier than the plastic limit.

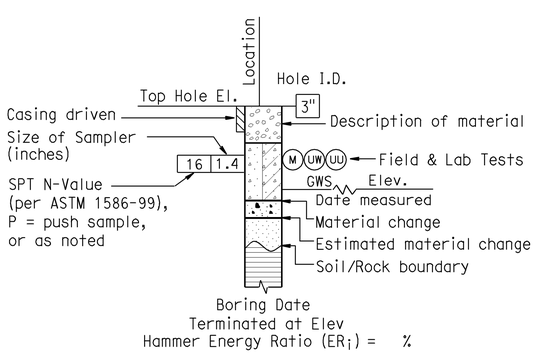

ROTARY BORING

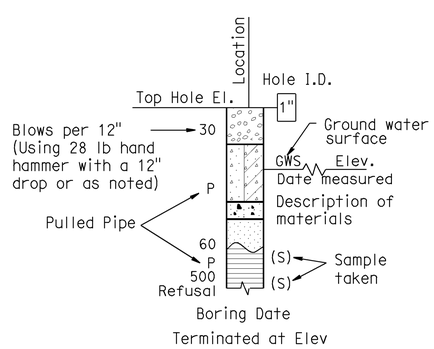

HAND BORING

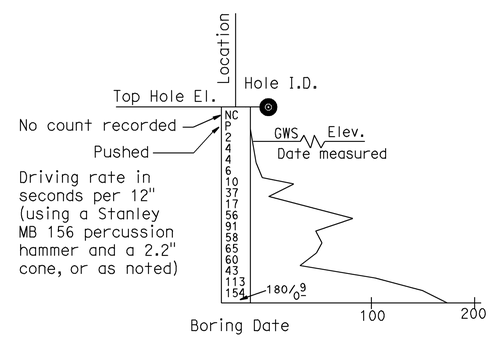

DYNAMIC CONE PENETRATION BORING

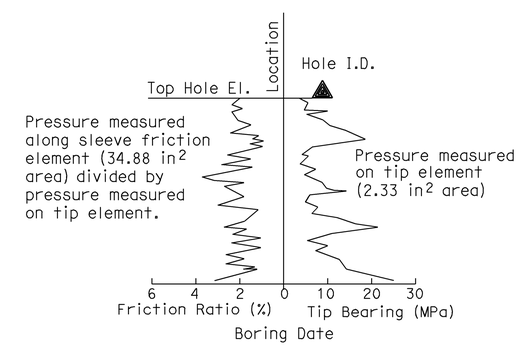

CONE PENETRATION TEST (CPT) SOUNDING

Sudhakar Vatti
DESIGN OVERSIGHT Sudhakar Vatti
8-10-09
SIGN OFF DATE

DRAWN BY: K.Pratheepan
CHECKED BY: G.J.Gunaranjan

FIELD INVESTIGATION BY:
R.Jie

PREPARED FOR THE STATE OF CALIFORNIA DEPARTMENT OF TRANSPORTATION

K.Arulmoli
PROJECT ENGINEER

BRIDGE NO. 55E0102
POST MILE 23.2

WALLS NO. 442 & 444
LOG OF TEST BORINGS NO. 1

OSF CIVIL LOG OF TEST BORINGS SHEET (ENGLISH) (REV. 2-25-05)

ORIGINAL SCALE IN INCHES FOR REDUCED PLANS 0 1 2 3

CU 12235
EA 071631

DISREGARD PRINTS BEARING EARLIER REVISION DATES
REVISION DATES (PRELIMINARY STAGE ONLY) 03/23/09 04/06/09 07/27/09

SHEET 23 OF 27

FILE => 55-e0102-z-ltb01.dgn

USERNAME => trcarol DATE PLOTTED => 04-FEB-2010 TIME PLOTTED => 10:25

REFERENCE: CALTRANS SOIL & ROCK LOGGING, CLASSIFICATION, AND PRESENTATION MANUAL (JUNE 2007)

GROUP SYMBOLS AND NAMES

Graphic/Symbol	Group Names
GW	Well-graded GRAVEL Well-graded GRAVEL with SAND
GP	Poorly graded GRAVEL Poorly graded GRAVEL with SAND
GW-GM	Well-graded GRAVEL with SILT Well-graded GRAVEL with SILT and SAND
GW-GC	Well-graded GRAVEL with CLAY (or SILTY CLAY) Well-graded GRAVEL with CLAY and SAND (or SILTY CLAY and SAND)
GP-GM	Poorly graded GRAVEL with SILT Poorly graded GRAVEL with SILT and SAND
GP-GC	Poorly graded GRAVEL with CLAY (or SILTY CLAY) Poorly graded GRAVEL with CLAY and SAND (or SILTY CLAY and SAND)
GM	SILTY GRAVEL SILTY GRAVEL with SAND
GC	CLAYEY GRAVEL CLAYEY GRAVEL with SAND
GC-GM	SILTY, CLAYEY GRAVEL SILTY, CLAYEY GRAVEL with SAND
SW	Well-graded SAND Well-graded SAND with GRAVEL
SP	Poorly graded SAND Poorly graded SAND with GRAVEL
SW-SM	Well-graded SAND with SILT Well-graded SAND with SILT and GRAVEL
SW-SC	Well-graded SAND with CLAY (or SILTY CLAY) Well-graded SAND with CLAY and GRAVEL (or SILTY CLAY and GRAVEL)
SP-SM	Poorly graded SAND with SILT Poorly graded SAND with SILT and GRAVEL
SP-SC	Poorly graded SAND with CLAY (or SILTY CLAY) Poorly graded SAND with CLAY and GRAVEL (or SILTY CLAY and GRAVEL)
SM	SILTY SAND SILTY SAND with GRAVEL
SC	CLAYEY SAND CLAYEY SAND with GRAVEL
SC-SM	SILTY, CLAYEY SAND SILTY, CLAYEY SAND with GRAVEL
PT	PEAT
	COBBLES COBBLES and BOULDERS BOULDERS

Graphic/Symbol	Group Names
CL	Lean CLAY Lean CLAY with SAND Lean CLAY with GRAVEL SANDY lean CLAY SANDY lean CLAY with GRAVEL GRAVELLY lean CLAY GRAVELLY lean CLAY with SAND
CL-ML	SILTY CLAY SILTY CLAY with SAND SILTY CLAY with GRAVEL SANDY SILTY CLAY SANDY SILTY CLAY with GRAVEL GRAVELLY SILTY CLAY GRAVELLY SILTY CLAY with SAND
ML	SILT SILT with SAND SILT with GRAVEL SANDY SILT SANDY SILT with GRAVEL GRAVELLY SILT GRAVELLY SILT with SAND
OL	ORGANIC lean CLAY ORGANIC lean CLAY with SAND ORGANIC lean CLAY with GRAVEL SANDY ORGANIC lean CLAY SANDY ORGANIC lean CLAY with GRAVEL GRAVELLY ORGANIC lean CLAY GRAVELLY ORGANIC lean CLAY with SAND
OL	ORGANIC SILT ORGANIC SILT with SAND ORGANIC SILT with GRAVEL SANDY ORGANIC SILT SANDY ORGANIC SILT with GRAVEL GRAVELLY ORGANIC SILT GRAVELLY ORGANIC SILT with SAND
CH	Fat CLAY Fat CLAY with SAND Fat CLAY with GRAVEL SANDY fat CLAY SANDY fat CLAY with GRAVEL GRAVELLY fat CLAY GRAVELLY fat CLAY with SAND
MH	Elastic SILT Elastic SILT with SAND Elastic SILT with GRAVEL SANDY elastic SILT SANDY elastic SILT with GRAVEL GRAVELLY elastic SILT GRAVELLY elastic SILT with SAND
OH	ORGANIC fat CLAY ORGANIC fat CLAY with SAND ORGANIC fat CLAY with GRAVEL SANDY ORGANIC fat CLAY SANDY ORGANIC fat CLAY with GRAVEL GRAVELLY ORGANIC fat CLAY GRAVELLY ORGANIC fat CLAY with SAND
OH	ORGANIC elastic SILT ORGANIC elastic SILT with SAND ORGANIC elastic SILT with GRAVEL SANDY ORGANIC elastic SILT SANDY ORGANIC elastic SILT with GRAVEL GRAVELLY ORGANIC elastic SILT GRAVELLY ORGANIC elastic SILT with SAND
OL/OH	ORGANIC SOIL ORGANIC SOIL with SAND ORGANIC SOIL with GRAVEL SANDY ORGANIC SOIL SANDY ORGANIC SOIL with GRAVEL GRAVELLY ORGANIC SOIL GRAVELLY ORGANIC SOIL with SAND

FIELD AND LABORATORY TESTING

- (C) Consolidation (ASTM D 2435)
- (CL) Collapse Potential (ASTM D 5333)
- (CP) Compaction Curve (CTM 216)
- (CR) Corrosivity Testing (CTM 643, CTM 422, CTM 417)
- (CU) Consolidated Undrained Triaxial (ASTM D 4767)
- (DS) Direct Shear (ASTM D 3080)
- (EI) Expansion Index (ASTM D 4829)
- (M) Moisture Content (ASTM D 2216)
- (OC) Organic Content-% (ASTM D 2974)
- (P) Permeability (CTM 220)
- (PA) Particle Size Analysis (ASTM D 422)
- (PI) Plasticity Index (AASHTO T 90) Liquid Limit (AASHTO T 89)
- (PL) Point Load Index (ASTM D 5731)
- (PM) Pressure Meter
- (PP) Pocket Penetrometer
- (R) R-Value (CTM 301)
- (SE) Sand Equivalent (CTM 217)
- (SG) Specific Gravity (AASHTO T 100)
- (SL) Shrinkage Limit (ASTM D 427)
- (SW) Swell Potential (ASTM D 4546)
- (TV) Pocket Torvane
- (UC) Unconfined Compression-Soil (ASTM D 2166) Unconfined Compression-Rock (ASTM D 2938)
- (UU) Unconsolidated Undrained Triaxial (ASTM D 2850)
- (UW) Unit Weight (ASTM D 4767)
- (VS) Vane Shear (AASHTO T 223)

DIST	COUNTY	ROUTE	POST MILES TOTAL PROJECT	SHEET No	TOTAL SHEETS
12	Ora	22,405, 605	R0.3/R0.9, 22.3/24.0,3.0/R1.6	1817	1929

07/27/09
REGISTERED CIVIL ENGINEER DATE

2-1-10
PLANS APPROVAL DATE

REGISTERED PROFESSIONAL ENGINEER K.Arulmoli No. GE 2090 Exp.12-31-09 GEOTECHNICAL STATE OF CALIFORNIA

The State of California or its officers or agents shall not be responsible for the accuracy or completeness of electronic copies of this plan sheet.

OCTA
550 SOUTH MAIN STREET
ORANGE, CA 92863

EARTH MECHANICS, INC.
17660, NEWHOPE STREET, SUITE E
FOUNTAIN VALLEY, CA 92708

APPARENT DENSITY OF COHESIONLESS SOILS

Description	SPT N_{60} (Blows / 12 inches)
Very loose	0 - 4
Loose	5 - 10
Medium Dense	11 - 30
Dense	31 - 50
Very Dense	> 50

MOISTURE

Description	Criteria
Dry	Absence of moisture, dusty, dry to the touch
Moist	Damp but no visible water
Wet	Visible free water, usually soil is below water table

PERCENT OR PROPORTION OF SOILS

Description	Criteria
Trace	Particles are present but estimated to be less than 5%
Few	5 to 10%
Little	15 to 25%
Some	30 to 45%
Mostly	50 to 100%

PARTICLE SIZE

Description		Size
Boulder		> 12"
Cobble		3" to 12"
Gravel	Coarse	3/4" to 3"
	Fine	No. 4 to 3/4"
Sand	Coarse	No. 10 to No. 4
	Medium	No. 40 to No. 10
	Fine	No. 200 to No. 40

Sudhakar Vatti
DESIGN OVERSIGHT Sudhakar Vatti
8-10-09
SIGN OFF DATE

DRAWN BY: K.Pratheepan
CHECKED BY: G.J.Gunaranjan

FIELD INVESTIGATION BY:
R.Jie

PREPARED FOR THE STATE OF CALIFORNIA DEPARTMENT OF TRANSPORTATION

K.Arulmoli
PROJECT ENGINEER

BRIDGE NO. 55E0102
POST MILE 23.2

WALLS NO. 442 & 444
LOG OF TEST BORINGS NO. 2

OSF CIVIL LOG OF TEST BORINGS SHEET (ENGLISH) (REV. 2-25-05)

ORIGINAL SCALE IN INCHES FOR REDUCED PLANS 0 1 2 3

CU 12235
EA 071631

DISREGARD PRINTS BEARING EARLIER REVISION DATES

REVISION DATES (PRELIMINARY STAGE ONLY) 03/25/09 04/06/09 07/27/09

SHEET 24 OF 27

FILE => 55-e0102-z-ltb02.dgn

USERNAME => trcarol DATE PLOTTED => 04-FEB-2010 TIME PLOTTED => 10:25

DIST	COUNTY	ROUTE	POST MILES TOTAL PROJECT	SHEET No	TOTAL SHEETS
12	Ora	22,405, 605	R0.3/R0.9, 22.3/24.0,3.0/R1.6	1818	1929

REGISTERED CIVIL ENGINEER 07/27/09 DATE

2-1-10
PLANS APPROVAL DATE

REGISTERED PROFESSIONAL ENGINEER K.Arulmoli No. GE 2090 Exp.12-31-09 GEOTECHNICAL STATE OF CALIFORNIA

The State of California or its officers or agents shall not be responsible for the accuracy or completeness of electronic copies of this plan sheet.

OCTA
550 SOUTH MAIN STREET
ORANGE, CA 92863

EARTH MECHANICS, INC.
17660, NEWHOPE STREET, SUITE E
FOUNTAIN VALLEY, CA 92708

BENCHMARKS:

Monument: 1A-144-04

Described by OCS 2005 - Found 3.75" OCS aluminum benchmark disk stamped "1A-144-04", set in the southwesterly corner of a 4.4 ft by 4.4 ft concrete catch basin. Monument is located in the northeasterly corner of the intersection of Seal Beach Boulevard and St. Cloud Drive, 44 ft easterly of the centerline of Seal Beach Boulvard and 58 ft northerly of the centerline of St. Cloud Dr. Monument is set level with the side walk. Elevation: 15.37 feet

NOTES:

(1) This LOTB sheet (Boring Record) was prepared in accordance with the Caltrans Soil and Rock Classification Logging, Classification and Presentation Manual (June 2007).

(2) 2.4" samples were taken using a California Modified Sampler.

(3) A rope and cat-head hammer system consisting of a hammer weight of 140 lbs falling a distance of 30" was used to advance the drive sampler.

(4) An automatic trip hammer system consisting of a hammer weight of 140 lbs falling a distance of 30" was used to advance the sampler.

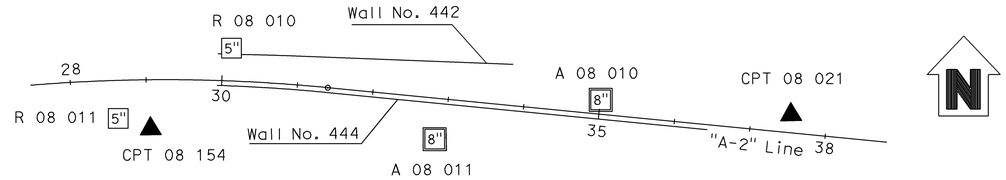

PLAN

1" = 100'

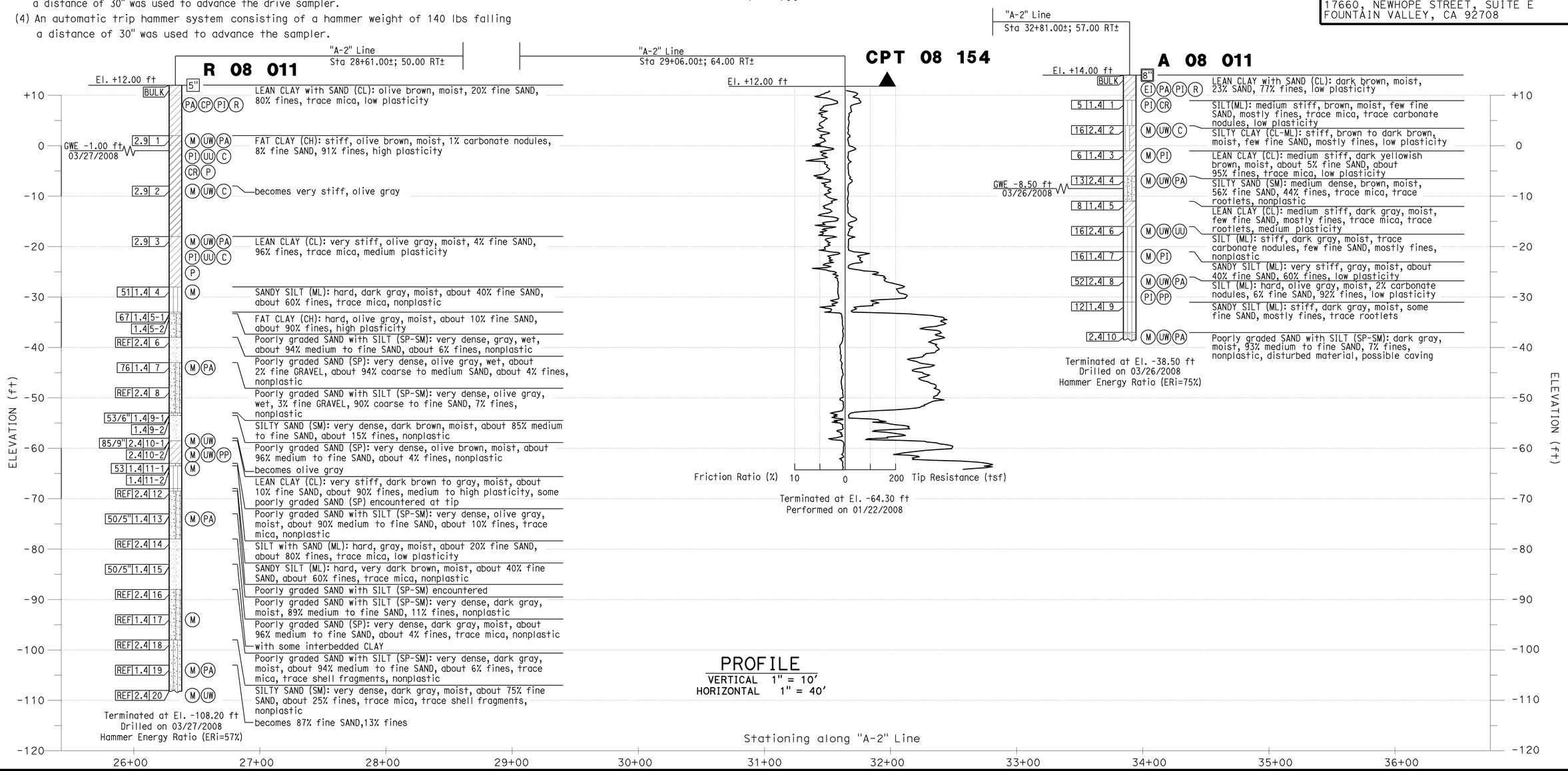

PROFILE

VERTICAL 1" = 10'
HORIZONTAL 1" = 40'

Sudhakar Vatti
DESIGN OVERSIGHT Sudhakar Vatti
8-10-09
SIGN OFF DATE

DRAWN BY: K.Pratheepan
CHECKED BY: G.J.Gunaranjan

FIELD INVESTIGATION BY:
R.Jie

PREPARED FOR THE STATE OF CALIFORNIA DEPARTMENT OF TRANSPORTATION

K.Arulmoli
PROJECT ENGINEER

BRIDGE NO. 55E0102
POST MILE 23.2

WALLS NO. 442 & 444
LOG OF TEST BORINGS NO. 3

OSF CIVIL LOG OF TEST BORINGS SHEET (ENGLISH) (REV. 2-25-05)

ORIGINAL SCALE IN INCHES FOR REDUCED PLANS 0 1 2 3

CU 12235
EA 071631

DISREGARD PRINTS BEARING EARLIER REVISION DATES

REVISION DATES (PRELIMINARY STAGE ONLY) 03/25/09 04/06/09 07/27/09

SHEET 25 OF 27

FILE => 55-e0102-z-ltb03.dgn

USERNAME => trcarol DATE PLOTTED => 04-FEB-2010 TIME PLOTTED => 10:25

BENCHMARKS:

Monument: 1A-144-04

Described by OCS 2005 - Found 3.75" OCS aluminum benchmark disk stamped "1A-144-04", set in the southwesterly corner of a 4.4 ft by 4.4 ft concrete catch basin. Monument is located in the northeasterly corner of the intersection of Seal Beach Boulevard and St. Cloud Drive, 44 ft easterly of the centerline of Seal Beach Boulvard and 58 ft northerly of the centerline of St. Cloud Dr. Monument is set level with the side walk. Elevation: 15.37 feet

NOTES:

(1) This LOTB sheet (Boring Record) was prepared in accordance with the Caltrans Soil and Rock Classification Logging, Classification and Presentation Manual (June 2007).

(2) 2.4" samples were taken using a California Modified Sampler.

(3) A rope and cat-head hammer system consisting of a hammer weight of 140 lbs falling a distance of 30" was used to advance the drive sampler.

(4) An automatic trip hammer system consisting of a hammer weight of 140 lbs falling a distance of 30" was used to advance the sampler.

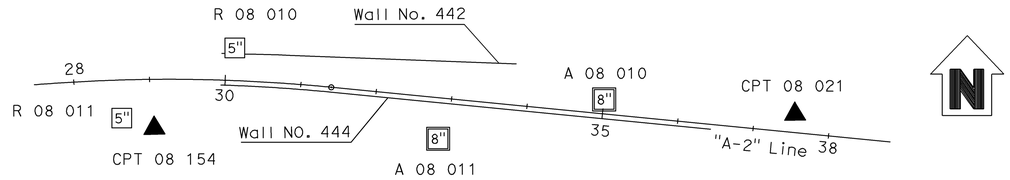

PLAN

1" = 100'

DIST	COUNTY	ROUTE	POST MILES TOTAL PROJECT	SHEET No	TOTAL SHEETS
12	Ora	22,405, 605	R0.3/R0.9, 22.3/24.0,3.0/R1.6	1819	1929

REGISTERED CIVIL ENGINEER 07/27/09 DATE

2-1-10
PLANS APPROVAL DATE

REGISTERED PROFESSIONAL ENGINEER K.Arulmoli No. GE 2090 Exp.12-31-09 GEOTECHNICAL STATE OF CALIFORNIA

The State of California or its officers or agents shall not be responsible for the accuracy or completeness of electronic copies of this plan sheet.

OCTA
550 SOUTH MAIN STREET
ORANGE, CA 92863

EARTH MECHANICS, INC.
17660, NEWHOPE STREET, SUITE E
FOUNTAIN VALLEY, CA 92708

PROFILE

VERTICAL 1" = 10'
HORIZONTAL 1" = 40'

Sudhakar Vatti
DESIGN OVERSIGHT Sudhakar Vatti

8-10-09
SIGN OFF DATE

DRAWN BY: K.Pratheepan
CHECKED BY: G.J.Gunaranjan

FIELD INVESTIGATION BY:
R.Jie

PREPARED FOR THE STATE OF CALIFORNIA DEPARTMENT OF TRANSPORTATION

K.Arulmoli
PROJECT ENGINEER

BRIDGE NO. 55E0102
POST MILE 23.2

WALLS NO. 442 & 444

LOG OF TEST BORINGS NO. 4

OSF CIVIL LOG OF TEST BORINGS SHEET (ENGLISH) (REV. 2-25-05)

ORIGINAL SCALE IN INCHES FOR REDUCED PLANS 0 1 2 3

CU 12235
EA 071631

DISREGARD PRINTS BEARING EARLIER REVISION DATES

REVISION DATES (PRELIMINARY STAGE ONLY) 03/23/09 04/06/09 07/21/09

SHEET 26 OF 27

FILE => 55-e0102-z-ltb04.dgn

USERNAME => trcarol DATE PLOTTED => 04-FEB-2010 TIME PLOTTED => 10:25

FED. ROAD DIV. NO.	STATE	PROJ. NO.	FISCAL YEAR	SHEET NO.	TOTAL SHEETS
7	CAL.			368	372

DIST.	COUNTY	ROUTE	SECTION	SHEET NO.	TOTAL SHEETS
VII	Ora	22	A	12	12

DIVISION ENGINEER — CHIEF ENGINEER — LICENSE NO.

DATE APPROVED April 8 .3

Bench Mark "200-A-59
Rd. C.S. T&W 41' Rt. of Rte. 179
Sta. 200+59.47 B.C. Ult. & Const.
Elev. 14.96

REGISTERED PROFESSIONAL ENGINEER
K. Arulmoli
No. GE 2090
Exp. 12-31-09
GEOTECHNICAL
STATE OF CALIFORNIA

AS BUILT PLANS
Contract No. 07-031804
Date Completed
Document No. 70002415

DIVISION OF ENGINEERING SERVICES - GEOTECHNICAL SERVICES					
As-Built Log of Test Borings sheet is considered an informational document only. As such, the State of California registration seal with signature, license number and registration certificate expiration date confirm that this is a true and accurate copy of the original document. This drawing is available and presented only for the convenience of any bidder, contractor or other interested party.					
DIST.	COUNTY	ROUTE	KILOMETER POST-TOTAL PROJECT	Sheet No.	Total Sheets
12	Ora	22, 405, 605	R0.3/R0.9,22.3/24.0,3.0/R1.6	1820	1929
REGISTERED CIVIL ENGINEER			07/27/09 DATE		

LOG OF TEST BORINGS NO. 5

NOTE: A COPY OF THIS LOG OF TEST BORINGS IS AVAILABLE AT OFFICE OF STRUCTURE MAINTENANCE AND INVESTIGATIONS, SACRAMENTO, CALIFORNIA	CU: 12235 EA: 071631	BRIDGE No. 55E0102	
		Sheet	of
		27	27

Revisions made to this Log of Test Borings from the original 1965 Log of Test Borings are the addition of the following table and notes:

To accompany plans dated 2-1-10

Boring	Station	Offset from "A-2" Line

PILE DATA
TYPE OF PILE: RAYMOND STEP TAPER
HAMMER DATA: VULCAN 80C
PILE DIAMETER: TIP 8" BUTT 16" ABUTS. 10" & 15" FOR BENTS
PILE DESIGN LOAD: = 45 TONS.
FOR THE STRUCTURE
NUMBER OF PILES = 144

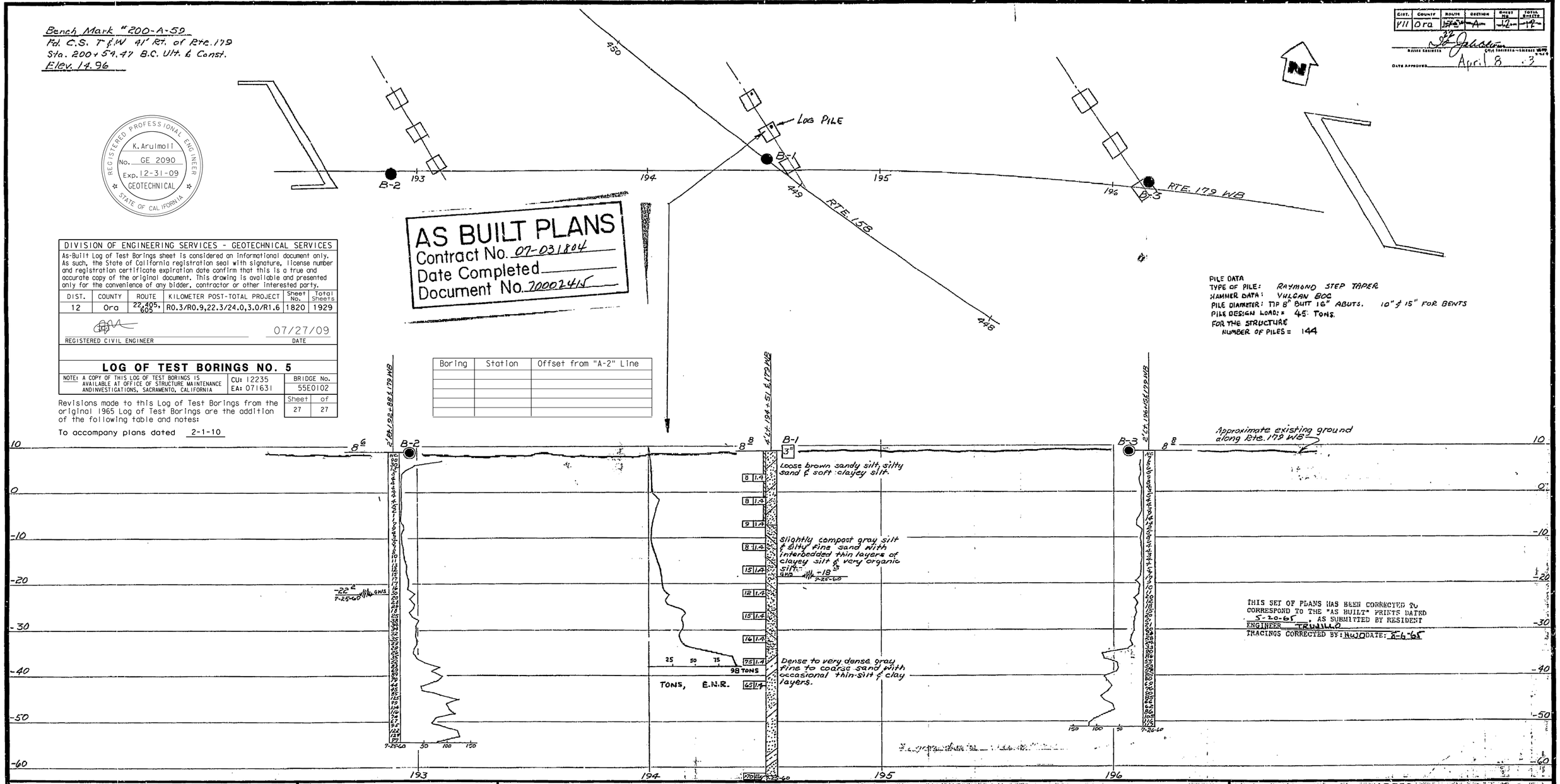

FIELD STUDY: M.L.Gordon 7-26-60
DRAWN: M.L.Gordon 8-4-60
CHECKED: M.A. Fernandez 8-17-60
Approval Recommended by: Materials & Research Engineer

CLASSIFICATION OF MATERIAL BASED ON STANDARD GRADE SIZE LIMITS

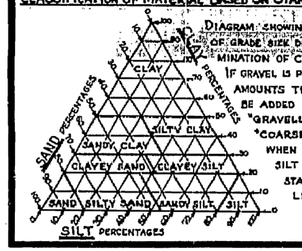

DIAGRAM SHOWING THE BASIS FOR ESTIMATES OF GRADE SIZE DISTRIBUTION USED IN DETERMINATION OF CLASS NAMES.

IF GRAVEL IS PRESENT IN APPRECIABLE AMOUNTS THE TERM "GRAVELLY" MAY BE ADDED TO THE CLASS NAME, VIZ. "GRAVELLY SAND." THE TERMS "COARSE", "MEDIUM" AND "FINE" WHEN USED TO DESCRIBE SAND, SILT AND GRAVEL REFER TO STANDARD GRADE SIZE LIMITS.

LEGEND OF EARTH MATERIALS

- GRAVEL
- SAND
- SILT
- CLAY
- SANDY CLAY OR CLAYEY SAND
- SANDY SILT OR SILTY SAND
- SILTY CLAY OR CLAYEY SILT
- PEAT AND/OR ORGANIC MATTER
- FILL MATERIAL
- IGNEOUS ROCK
- SEDIMENTARY ROCK
- METAMORPHIC ROCK

LEGEND OF BORING OPERATIONS

- PLAN OF ANY BORING
- PENETROMETER
- 2¼" CONE PENETROMETER
- SAMPLER BORING (DRY)
- ROTARY BORING (WET)
- AUGER BORING (DRY)
- JET BORING
- CORE BORING
- TEST PIT

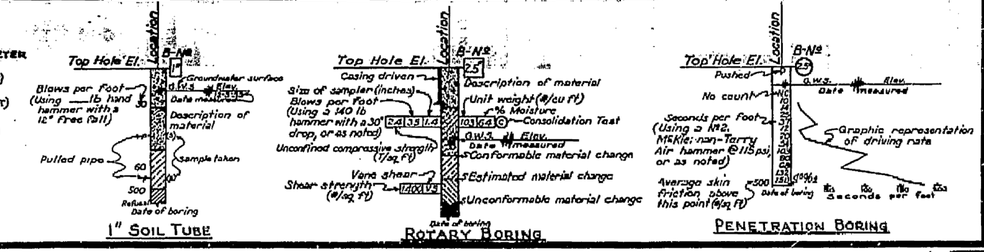

NOTES

[redacted]

Classification of earth material as shown on this sheet is based upon field inspection and is not to be construed to imply mechanical analysis.

STATE OF CALIFORNIA
DEPARTMENT OF PUBLIC WORKS
DIVISION OF HIGHWAYS

RTE 22/405

ROUTE ~~179/158~~ SEPARATION

LOG OF TEST BORINGS

SCALE	BRIDGE	FILE	DRAWING
Horiz: 1"=20' Vert: 1"=10'	55-333L		C-55333-12

PREL. DRAWING NO. P-55333-8 3-16-61

Bridge Dept.

FILENAME => 55-e0102-z-itb05.tif

I HEREBY CERTIFY THAT THIS IS A TRUE AND ACCURATE COPY OF THE ABOVE DOCUMENT TAKEN UNDER MY DIRECTION AND CONTROL ON THIS DATE IN SACRAMENTO, CALIFORNIA PURSUANT TO AUTHORIZATION BY THE DIRECTOR OF PUBLIC WORKS.

DATE 2-10-22 SIGNATURE [illegible] TITLE SR [illegible]

368

DIST	COUNTY	ROUTE	POST MILES TOTAL PROJECT	SHEET No	TOTAL SHEETS
12	Ora	22,405, 605	R0.3/R0.9, 22.3/24.0,3.0/R1.6	1821	1929

REGISTERED CIVIL ENGINEER 7/27/09 DATE

2-1-10
PLANS APPROVAL DATE

REGISTERED PROFESSIONAL ENGINEER Vinh Trinh No. C 50685 Exp. 09-30-09 CIVIL STATE OF CALIFORNIA

The State of California or its officers or agents shall not be responsible for the accuracy or completeness of electronic copies of this plan sheet.

OCTA
550 SOUTH MAIN STREET
ORANGE, CA 92863

WKE, INC.
400 N. TUSTIN AVE, SUITE 285
SANTA ANA, CA 92705

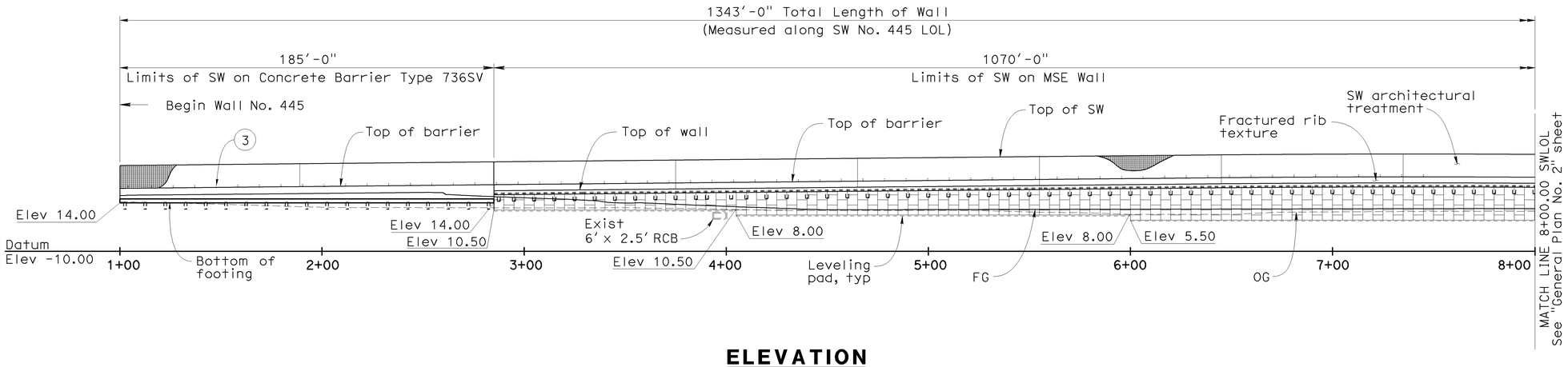

ELEVATION

1" = 30'

NOTES:

1. For Typical Sections, see "General Plan No. 3" sheet
2. For sound wall architectural treatment, see "Sound Wall Details, SW-32" sheet.
3. For utility information, see "Utility Plans"
4. Elevation shown at leveling pad is at top of leveling pad.

LEGEND:

(1) Concrete Barrier (Type 736 Mod) with sound wall (H=14'-4")
(2) Concrete Barrier (Type 736SV Mod) with sound wall (H=14'-4")
(3) 2 - 4" Ø cored holes. See "Structure Plan" sheets for locations.

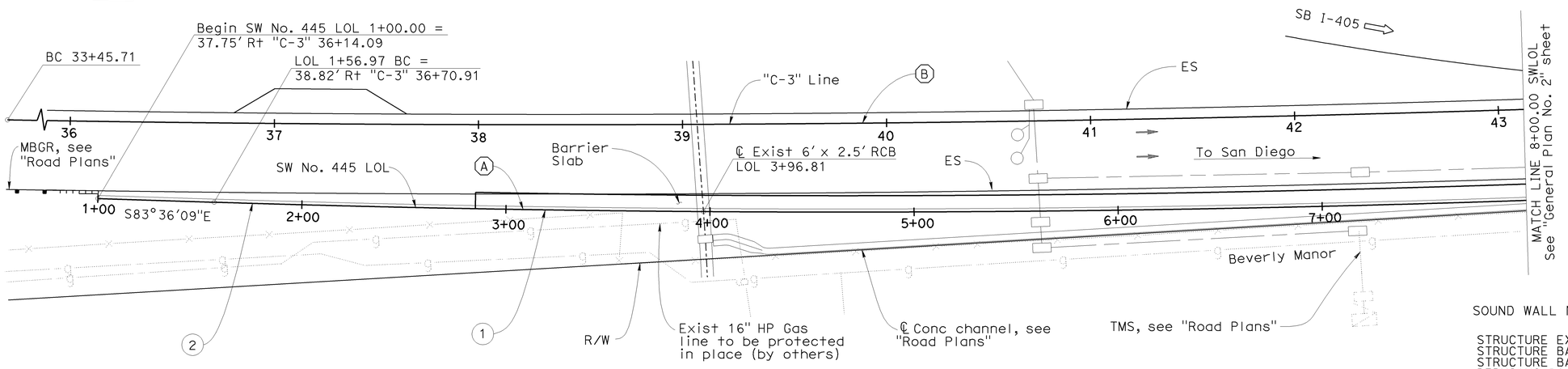

PLAN

1" = 30'

CURVE DATA

No.	R	Δ	T	L
A	9791.00'	04°03'01"	346.20'	692.12'
B	15130.00'	04°11'37"	553.96'	1107.42'

SOUND WALL No. 445 Br No. 55E0103

QUANTITIES

STRUCTURE EXCAVATION (RETAINING WALL)	315	CY
STRUCTURE BACKFILL (SLURRY CEMENT)	130	CY
STRUCTURE BACKFILL (RETAINING WALL)	320	CY
PERVIOUS BACKFILL MATERIAL (RETAINING WALL)	13	CY
EARTH RETAINING STRUCTURE, LOCATION 3	15,100	SQFT
24" CAST-IN-DRILLED-HOLE CONCRETE PILING	423	LF
18" CAST-IN-DRILLED-HOLE CONCRETE PILING	1,117	LF
STRUCTURAL CONCRETE, RETAINING WALL	70	CY
STRUCTURAL CONCRETE, BARRIER SLAB	480	CY
MINOR CONCRETE (MINOR STRUCTURE)	34	CY
FRACTURED RIB TEXTURE	660	SQFT
SOUND WALL (MASONRY BLOCK)	14,220	SQFT
BAR REINFORCING STEEL (RETAINING WALL)	5,600	LB
BAR REINFORCING STEEL (SOUND WALL)	15,500	LB
CONCRETE BARRIER (TYPE 736 MODIFIED)	1,100	LF
CONCRETE BARRIER (TYPE 736SV)	185	LF

NOTE:
THE CONTRACTOR SHALL VERIFY ALL CONTROLLING FIELD DIMENSIONS BEFORE ORDERING OR FABRICATING ANY MATERIAL.

Sudhakar Vatti
DESIGN OVERSIGHT Sudhakar Vatti
9-9-09
SIGN OFF DATE

	BY	CHECKED
DESIGN	V. Trinh	K. Nelson
DETAILS	V. Trinh	K. Nelson
QUANTITIES	K. Coates	V. Trinh

LOAD AND RESISTANCE FACTOR DESIGN (LRFD) — LIVE LOADING: HL-93 W/"LOW BOY" AND PERMIT DESIGN VEHICLE

	BY	CHECKED
LAYOUT	V. Trinh	A. Priley
SPECIFICATIONS	EL Tyk	PLANS AND SPECS COMPARED V. Trinh

PREPARED FOR THE STATE OF CALIFORNIA DEPARTMENT OF TRANSPORTATION

V. Trinh
PROJECT ENGINEER

BRIDGE NO. 55E0103
POST MILES R0.5

SOUND WALL NO. 445
GENERAL PLAN NO. 1

DESIGN GENERAL PLAN SHEET (ENGLISH) (REV.2/25/05)

ORIGINAL SCALE IN INCHES FOR REDUCED PLANS 0 1 2 3

CU 12235
EA 071631

DISREGARD PRINTS BEARING EARLIER REVISION DATES — REVISION DATES (PRELIMINARY STAGE ONLY) 02/06/09 04/06/09 7/27/09

SHEET 1 OF 24

FILE => 55-e0103-a-gp01.dgn

USERNAME => trmartin DATE PLOTTED => 04-FEB-2010 TIME PLOTTED => 12:40

DIST	COUNTY	ROUTE	POST MILES TOTAL PROJECT	SHEET No	TOTAL SHEETS
12	Ora	22,405, 605	R0.3/R0.9 22.3/24.0,3.0/R1.6	1822	1929

REGISTERED CIVIL ENGINEER 7/27/09 DATE

2-1-10
PLANS APPROVAL DATE

REGISTERED PROFESSIONAL ENGINEER Vinh Trinh No. C 50685 Exp. 09-30-09 CIVIL STATE OF CALIFORNIA

The State of California or its officers or agents shall not be responsible for the accuracy or completeness of electronic copies of this plan sheet.

OCTA
550 SOUTH MAIN STREET
ORANGE, CA 92863

WKE, INC.
400 N. TUSTIN AVE, SUITE 285
SANTA ANA, CA 92705

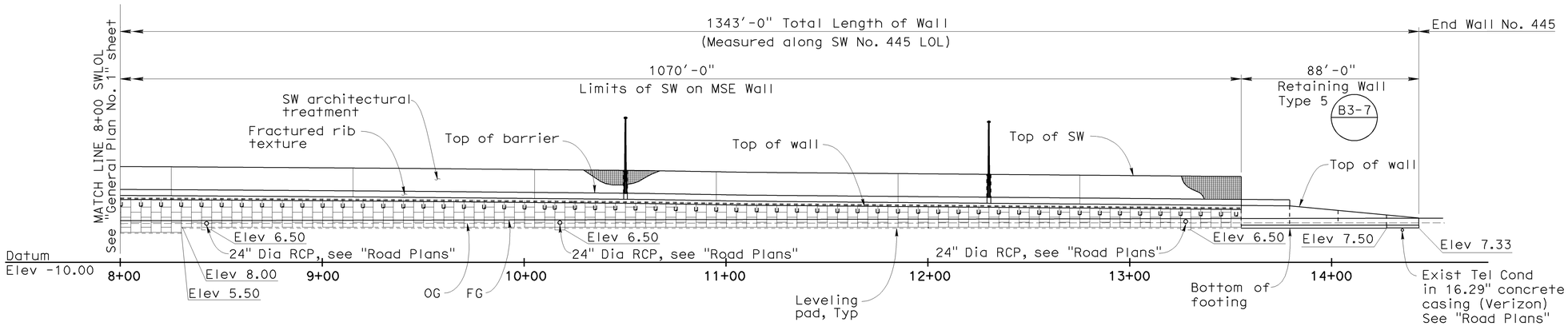

ELEVATION
1" = 30'

NOTES:

1. For Typical Sections, see "General Plan No. 3" sheet
2. For sound wall architectural treatment, see "Sound Wall Details, SW-32" sheet.
3. For utility information, see "Utility Plans"
4. Elevation shown at leveling pad is at top of leveling pad.

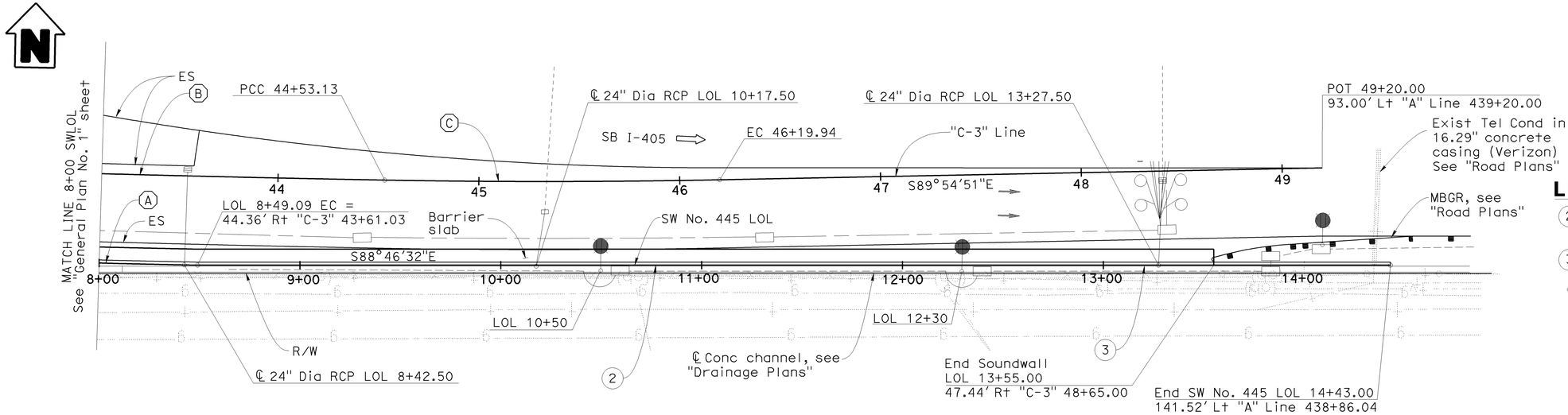

PLAN
1" = 30'

LEGEND:

(2) Concrete Barrier (Type 736SV Mod) with sound wall (H=14'-4")

(3) Concrete Barrier (Type 736A Mod)

Electrolier, see "Road Plans"

CURVE DATA

No.	R	Δ	T	L
A	9791.00'	04°03'01"	346.20'	692.12'
B	15130.00'	04°11'37"	553.96'	1107.42'
C	4400.00'	02°10'20"	83.42'	166.81'

NOTE:
THE CONTRACTOR SHALL VERIFY ALL CONTROLLING FIELD DIMENSIONS BEFORE ORDERING OR FABRICATING ANY MATERIAL.

Sudhakar Vatti
DESIGN OVERSIGHT Sudhakar Vatti
9-9-09
SIGN OFF DATE

	BY	CHECKED
DESIGN	V. Trinh	K. Nelson
DETAILS	V. Trinh	K. Nelson
QUANTITIES	K. Coates	V. Trinh

LOAD AND RESISTANCE FACTOR DESIGN (LRFD) — LIVE LOADING: HL-93 W/"LOW BOY" AND PERMIT DESIGN VEHICLE

	BY	CHECKED
LAYOUT	V. Trinh	A. Priley
SPECIFICATIONS	EL Tyk	PLANS AND SPECS COMPARED V. Trinh

PREPARED FOR THE STATE OF CALIFORNIA DEPARTMENT OF TRANSPORTATION

V. Trinh
PROJECT ENGINEER

BRIDGE NO. 55E0103
POST MILES R0.5

SOUND WALL NO. 445
GENERAL PLAN NO. 2

DESIGN GENERAL PLAN SHEET (ENGLISH) (REV.2/25/05)

ORIGINAL SCALE IN INCHES FOR REDUCED PLANS 0 1 2 3

CU 12235
EA 071631

DISREGARD PRINTS BEARING EARLIER REVISION DATES

REVISION DATES (PRELIMINARY STAGE ONLY) 02/06/09 04/06/09 7/27/09

SHEET 2 OF 24

FILE => 55-e0103-a-gp02.dgn

USERNAME => trmartin DATE PLOTTED => 04-FEB-2010 TIME PLOTTED => 12:43

DIST	COUNTY	ROUTE	POST MILES TOTAL PROJECT	SHEET No	TOTAL SHEETS
12	Ora	22,405, 605	R0.3/R0.9, 22.3/24.0,3.0/R1.6	1823	1929

REGISTERED CIVIL ENGINEER 7/27/09 DATE

2-1-10
PLANS APPROVAL DATE

The State of California or its officers or agents shall not be responsible for the accuracy or completeness of electronic copies of this plan sheet.

REGISTERED PROFESSIONAL ENGINEER Vinh Trinh No. C 50685 Exp. 09-30-09 CIVIL STATE OF CALIFORNIA

OCTA
550 SOUTH MAIN STREET
ORANGE, CA 92863

WKE, INC.
400 N. TUSTIN AVE, SUITE 285
SANTA ANA, CA 92705

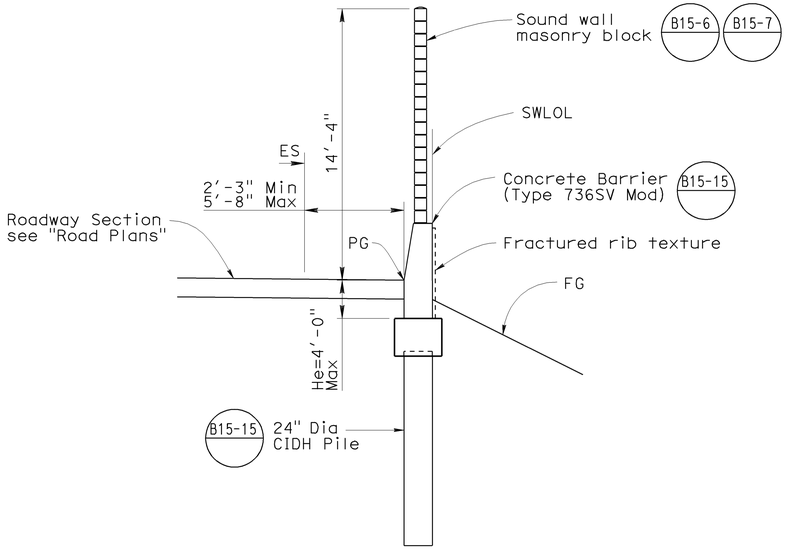

TYPICAL SECTION
SW 445 LOL STA 1+00 TO 2+85.00
NO SCALE

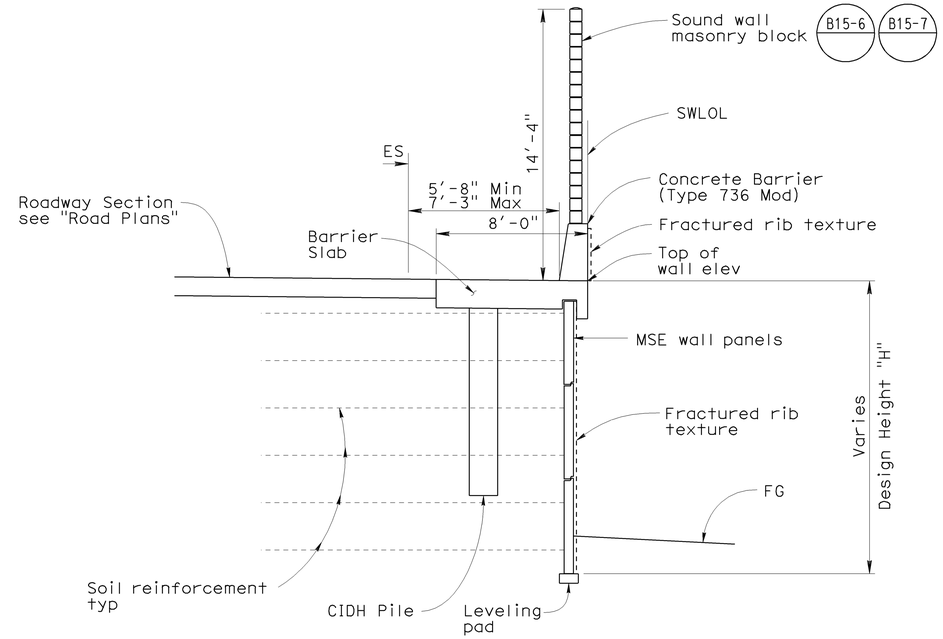

TYPICAL SECTION
SW 445 LOL STA 2+85.00 TO 4+01.50
NO SCALE

NOTES:

1. For Plan and Elevation, see "General Plan No. 1" and "General Plan No. 2" sheets.

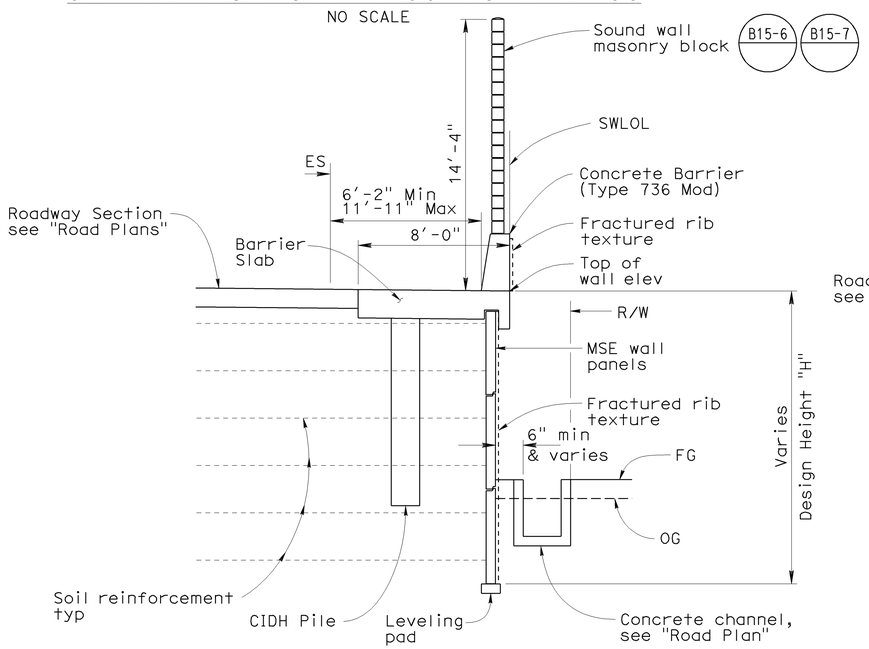

TYPICAL SECTION
SW 445 LOL STA 4+01.50 TO 13+55.00
NO SCALE

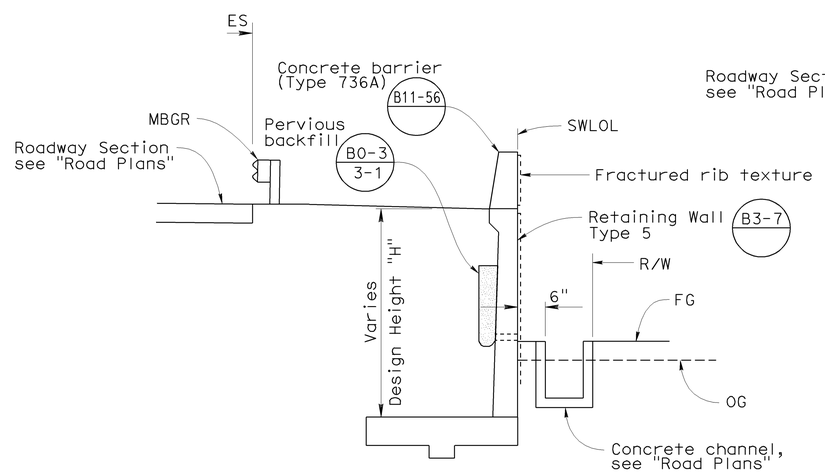

TYPICAL SECTION
SW 445 LOL STA 13+55.00 TO 13+79.00
NO SCALE

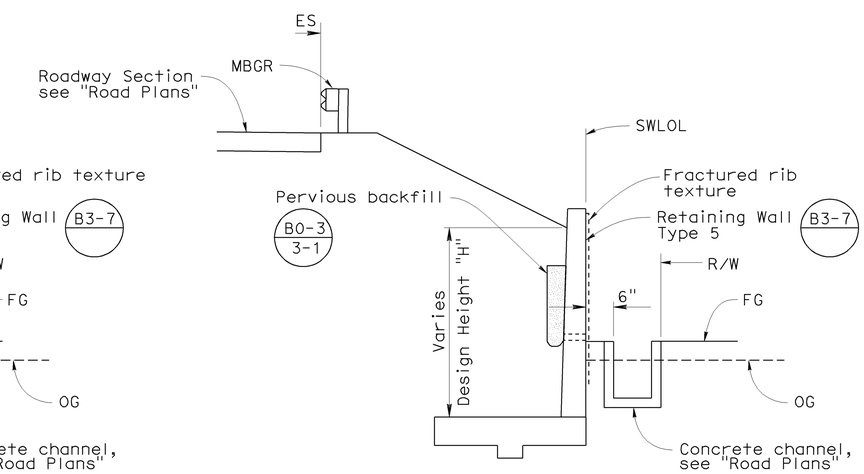

TYPICAL SECTION
SW 445 LOL STA 13+79.00 TO 14+43.00
NO SCALE

NOTE:
THE CONTRACTOR SHALL VERIFY ALL CONTROLLING FIELD DIMENSIONS BEFORE ORDERING OR FABRICATING ANY MATERIAL.

Sudhakar Vatti
DESIGN OVERSIGHT Sudhakar Vatti
9-9-09
SIGN OFF DATE

	BY	CHECKED			
DESIGN	V. Trinh	K. Nelson	LOAD AND RESISTANCE FACTOR DESIGN (LRFD)	LIVE LOADING: HL-93 W/"LOW BOY" AND PERMIT DESIGN VEHICLE	
DETAILS	V. Trinh	K. Nelson	LAYOUT	V. Trinh	A. Priley
QUANTITIES	K. Coates	V. Trinh	SPECIFICATIONS	EL Tyk	PLANS AND SPECS COMPARED V. Trinh

PREPARED FOR THE STATE OF CALIFORNIA DEPARTMENT OF TRANSPORTATION

V. Trinh
PROJECT ENGINEER

BRIDGE NO. 55E0103
POST MILES R0.5

SOUND WALL NO. 445
GENERAL PLAN NO. 3

DESIGN GENERAL PLAN SHEET (ENGLISH) (REV.2/25/05)

ORIGINAL SCALE IN INCHES FOR REDUCED PLANS 0 1 2 3

CU 12235
EA 071631

DISREGARD PRINTS BEARING EARLIER REVISION DATES
REVISION DATES (PRELIMINARY STAGE ONLY) 02/14/09 04/06/09 7/27/09

SHEET 3 OF 24

FILE => 55-e0103-a-gp03.dgn

USERNAME => ttmartin DATE PLOTTED => 04-FEB-2010 TIME PLOTTED => 12:40

DIST	COUNTY	ROUTE	POST MILES TOTAL PROJECT	SHEET No	TOTAL SHEETS
12	Ora	22,405, 605	R0.3/R0.9, 22.3/24.0,3.0/R1.6	1824	1929

REGISTERED CIVIL ENGINEER 7/27/09 DATE

2-1-10
PLANS APPROVAL DATE

The State of California or its officers or agents shall not be responsible for the accuracy or completeness of electronic copies of this plan sheet.

REGISTERED PROFESSIONAL ENGINEER Vinh Trinh No. C 50685 Exp. 09-30-09 CIVIL STATE OF CALIFORNIA

OCTA
550 SOUTH MAIN STREET
ORANGE, CA 92863

WKE, INC.
400 N. TUSTIN AVE, SUITE 285
SANTA ANA, CA 92705

STANDARD PLANS DATED MAY 2006

A10A	Acronyms and Abbreviations (Sheet 1 of 2)
A10B	Acronyms and Abbreviations (Sheet 2 of 2)
A10C	Symbols (Sheet 1 of 2)
A10D	Symbols (Sheet 2 of 2)
A62B	Limits of Excavation and Backfill - Bridge Surcharge and Wall
RSP A74	Survey Monuments
D102	Underdrains
B0-1	Bridge Details
B0-3	Bridge Details
B0-13	Bridge Details
B3-7	Retaining Wall Type 5
B3-8	Retaining Wall Details No. 1
B11-56	Concrete Barrier Type 736
RSP B15-6	Sound Wall Masonry Block on Type 736S/SV Barrier Details (1)
B15-7	Sound Wall Masonry Block on Type 736S/SV Barrier Details (2)
B15-15	Sound Wall Masonry Block on Type 736S/SV Barrier on Pile Footing for Spanning Utility Barrier
RSP ES-6A	Electrical Systems (Lighting Standard, Type 15 and 21)
ES-6B	Electrical Systems (Lighting Standard, Type 15 and 21, Barrier Rail Mounted Details)

Standard Plan Sheet No.

Detail No.

LEGEND

- Limits of structure excavation
- Limits of structure backfill
- Limits of permeable material
- Limits of slurry cement
- Roadway Excavation (Aerially Deposited Lead) (See "Road Plans")

GENERAL NOTES

Live loading: Surcharge = 240 lb/ft^2

Soil parameters:

Internal design ϕ = 34°, γ = 120 lb/ft^3

External design ϕ(Backfill) = 34°, γ = 120 lb/ft^3

ϕ(Foundation) = 30°

MSE wall panels:

f'c = 4,000 psi (Concrete compressive strength at 28 days)

fy = 60,000 psi (Yield strength of reinforcement)

Soil reinforcement:

Welded wire mats: fy = 65,000 psi (Yield strength)

Coupler: fy = 36,000 psi (Yield strength)

Corrosion rate = 1.1 mils/year

Reinforced concrete:

f'c = 3,600 psi, except as noted

(Concrete compressive strength at 28 days)

fy = 60,000 psi (Yield strength of reinforcement)

NOTES

1. Limits to FS except to GP when in roadway section.
2. Locate 8" perforated underdrain below bottom level of welded wire mats.
3. Maximum spacing at outlet pipes is 200 ft.
4. At sags in profile of underdrain, install outlet pipe for each direction of flow.

INDEX TO PLANS

SHEET No.	TITLE
1	General Plan No. 1
2	General Plan No. 2
3	General Plan No. 3
4	Index to Plans
5	Structure Plan No. 1
6	Structure Plan No. 2
7	Structure Plan No. 3
8	Structure Plan No. 4
9	Structure Plan No. 5
10	Structure Plan No. 6
11	Panel Details No. 1
12	Panel Details No. 2
13	Wall Details No. 1
14	Wall Details No. 2
15	Wall Details No. 3
16	Architectural Panel Layout No. 1
17	Architectural Panel Layout No. 2
18	Architectural Panel Layout No. 3
19	Architectural Details
20	Log of Test Borings No. 1
21	Log of Test Borings No. 2
22	Log of Test Borings No. 3
23	Log of Test Borings No. 4
24	Log of Test Borings No. 5

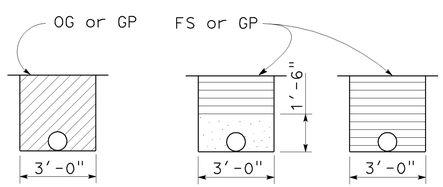

OUTLET PIPE **CLEANOUT PIPE**

EXCAVATION **BACKFILL**

OUTLET OR CLEANOUT PIPE FOR UNDERDRAIN

NO SCALE

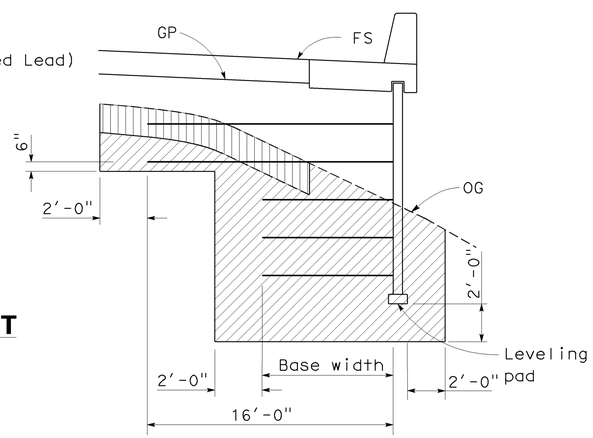

MSE WALL

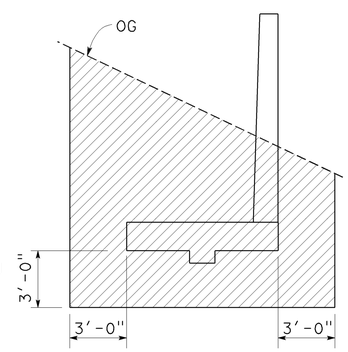

TYPE 5 RETAINING WALL

LIMITS OF EXCAVATION

NO SCALE

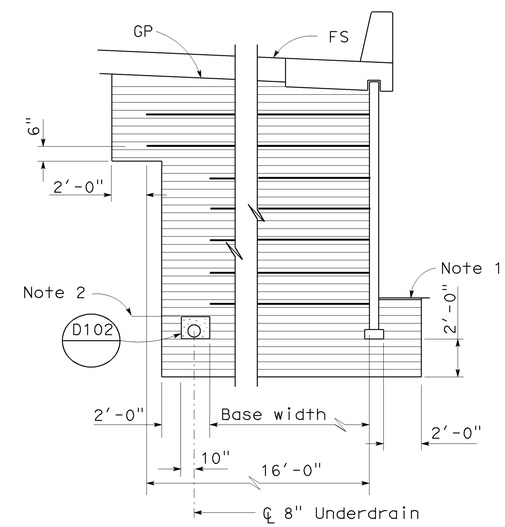

MSE WALL

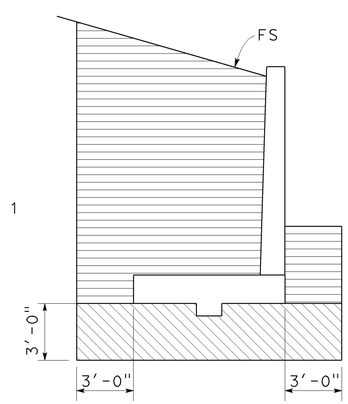

TYPE 5 RETAINING WALL

LIMITS OF BACKFILL

NO SCALE

NOTE:
THE CONTRACTOR SHALL VERIFY ALL CONTROLLING FIELD DIMENSIONS BEFORE ORDERING OR FABRICATING ANY MATERIAL.

DESIGN	BY V. Trinh	CHECKED K. Nelson	
DETAILS	BY V. Trinh	CHECKED K. Nelson	
QUANTITIES	BY K. Coates	CHECKED V. Trinh	

DESIGN OVERSIGHT Sudhakar Vatti
8-10-09
SIGN OFF DATE

PREPARED FOR THE STATE OF CALIFORNIA DEPARTMENT OF TRANSPORTATION

V. Trinh
PROJECT ENGINEER

CU 12235
EA 071631

BRIDGE NO. 55E0103
POST MILE R0.5

SOUND WALL NO. 445

INDEX TO PLANS

DESIGN DETAIL SHEET (ENGLISH) (REV. 2/25/05)

ORIGINAL SCALE IN INCHES FOR REDUCED PLANS 0 1 2 3

DISREGARD PRINTS BEARING EARLIER REVISION DATES

REVISION DATES (PRELIMINARY STAGE ONLY) 04/06/09 7/27/09

SHEET 4 OF 24

FILE => 55-e0103-a-itp.dgn

USERNAME => trmorrin DATE PLOTTED => 04-FEB-2010 TIME PLOTTED => 12:40

DIST	COUNTY	ROUTE	POST MILES TOTAL PROJECT	SHEET No	TOTAL SHEETS
12	Ora	22,405, 605	R0.3/R0.9, 22.3/24.0,3.0/R1.6	1825	1929

REGISTERED CIVIL ENGINEER 7/27/09 DATE

2-1-10
PLANS APPROVAL DATE

REGISTERED PROFESSIONAL ENGINEER Vinh Trinh No. C 50685 Exp. 09-30-09 CIVIL STATE OF CALIFORNIA

The State of California or its officers or agents shall not be responsible for the accuracy or completeness of electronic copies of this plan sheet.

OCTA
550 SOUTH MAIN STREET
ORANGE, CA 92863

WKE, INC.
400 N. TUSTIN AVE, SUITE 285
SANTA ANA, CA 92705

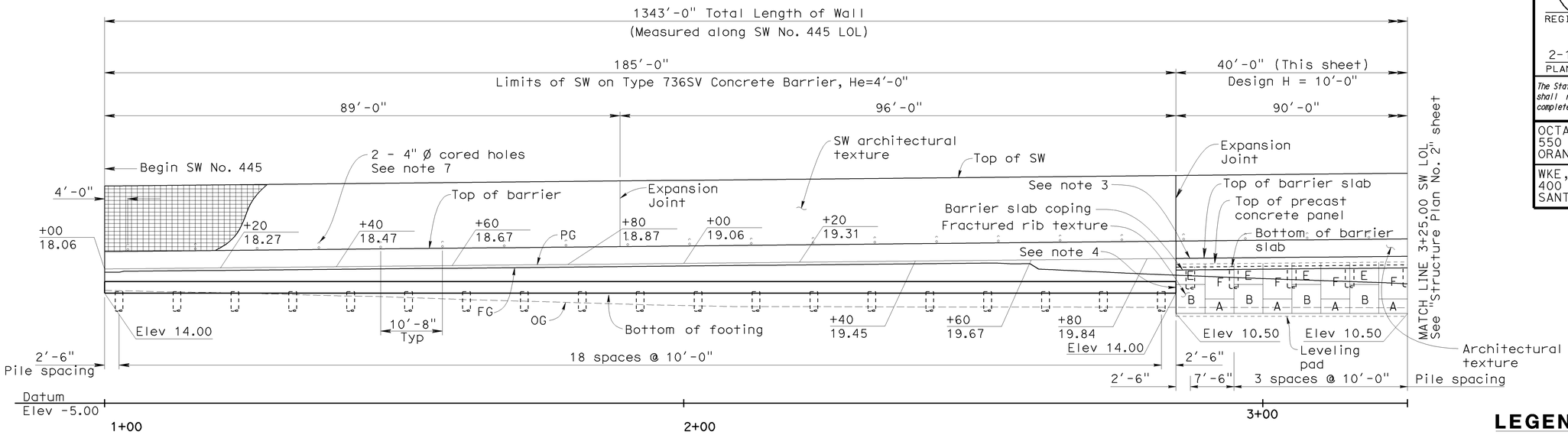

ELEVATION

1" = 10'

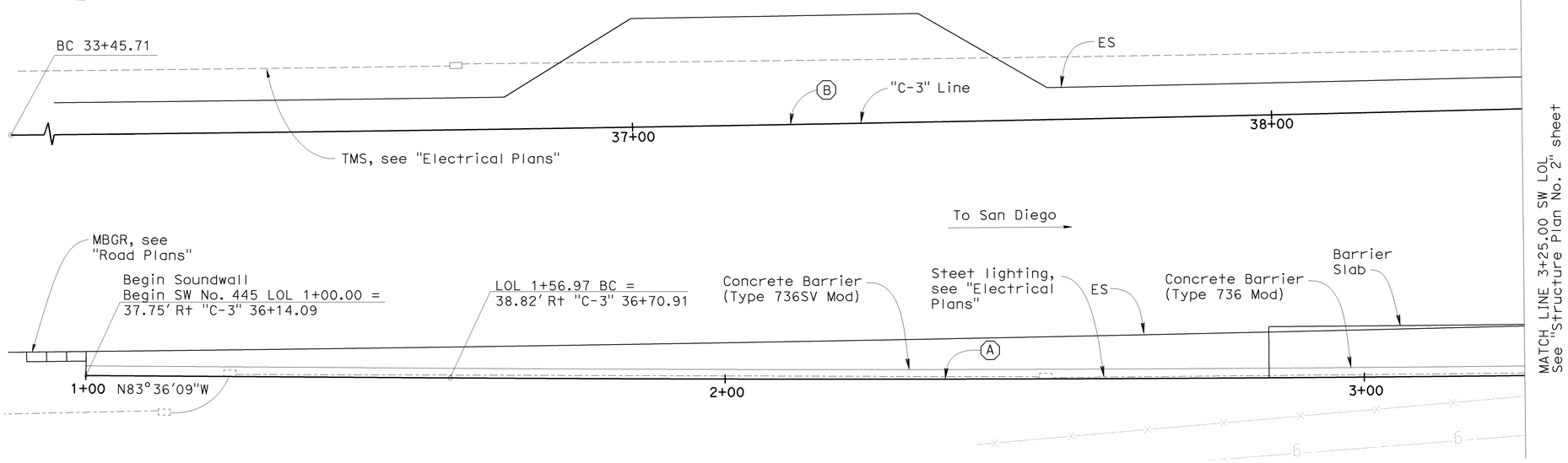

PLAN

1" = 10'

LEGEND:

- 30 — Indicates interval in years from time of construction to time of removal of inspection wire
- A — Indicates location of inspection wire, see "Wall Details No. 2" sheet
- Indicates panel type designation (See notes 2 & 3)

NOTES:

1. For Typical Sections, see "General Plan No. 3" sheet
2. For MSE wall details, see "Panel Details No. 1" and "Panel Details No. 2" sheets
3. For top of wall elevations within limits of MSE wall, see "Wall Details No. 2" sheet
4. For connection details between MSE wall panels and concrete wall, see "Wall Details No. 2" sheet
5. For sound wall architectural texture, see "Sound Wall Details, SW-32" sheet.
6. For utilities, see "Utility Plans"
7. For core hole detail, see "Wall Details No. 2" sheet
8. Elevation shown at leveling pad is at top of leveling pad.

CURVE DATA

No.	R	Δ	T	L
A	9791.00'	04°03'01"	346.20'	692.12'
B	15130.00'	04°11'37"	553.96'	1107.42'

NOTE:
THE CONTRACTOR SHALL VERIFY ALL CONTROLLING FIELD DIMENSIONS BEFORE ORDERING OR FABRICATING ANY MATERIAL.

Sudhakar Vatti
DESIGN OVERSIGHT Sudhakar Vatti
9-9-09
SIGN OFF DATE

	BY	CHECKED
DESIGN	V. Trinh	K. Nelson
DETAILS	V. Trinh	K. Nelson
QUANTITIES	K. Coates	V. Trinh

PREPARED FOR THE STATE OF CALIFORNIA DEPARTMENT OF TRANSPORTATION

V. Trinh
PROJECT ENGINEER

BRIDGE NO. 55E0103
POST MILE R0.5

SOUND WALL NO. 445
STRUCTUAL PLAN NO. 1

DESIGN DETAIL SHEET (ENGLISH) (REV. 2/25/05)

ORIGINAL SCALE IN INCHES FOR REDUCED PLANS 0 1 2 3

CU 12235
EA 071631

DISREGARD PRINTS BEARING EARLIER REVISION DATES
REVISION DATES (PRELIMINARY STAGE ONLY) 04/06/09 7/27/09

SHEET 5 OF 24

FILE => 55-e0103-c-sp01.dgn

USERNAME => trmartin DATE PLOTTED => 04-FEB-2010 TIME PLOTTED => 12:40

DIST	COUNTY	ROUTE	POST MILES TOTAL PROJECT	SHEET No	TOTAL SHEETS
12	Ora	22,405, 605	R0.3/R0.9, 22.3/24.0,3.0/R1.6	1826	1929

REGISTERED CIVIL ENGINEER 7/27/09 DATE

2-1-10
PLANS APPROVAL DATE

REGISTERED PROFESSIONAL ENGINEER Vinh Trinh No. C 50685 Exp. 09-30-09 CIVIL STATE OF CALIFORNIA

The State of California or its officers or agents shall not be responsible for the accuracy or completeness of electronic copies of this plan sheet.

OCTA
550 SOUTH MAIN STREET
ORANGE, CA 92863

WKE, INC.
400 N. TUSTIN AVE, SUITE 285
SANTA ANA, CA 92705

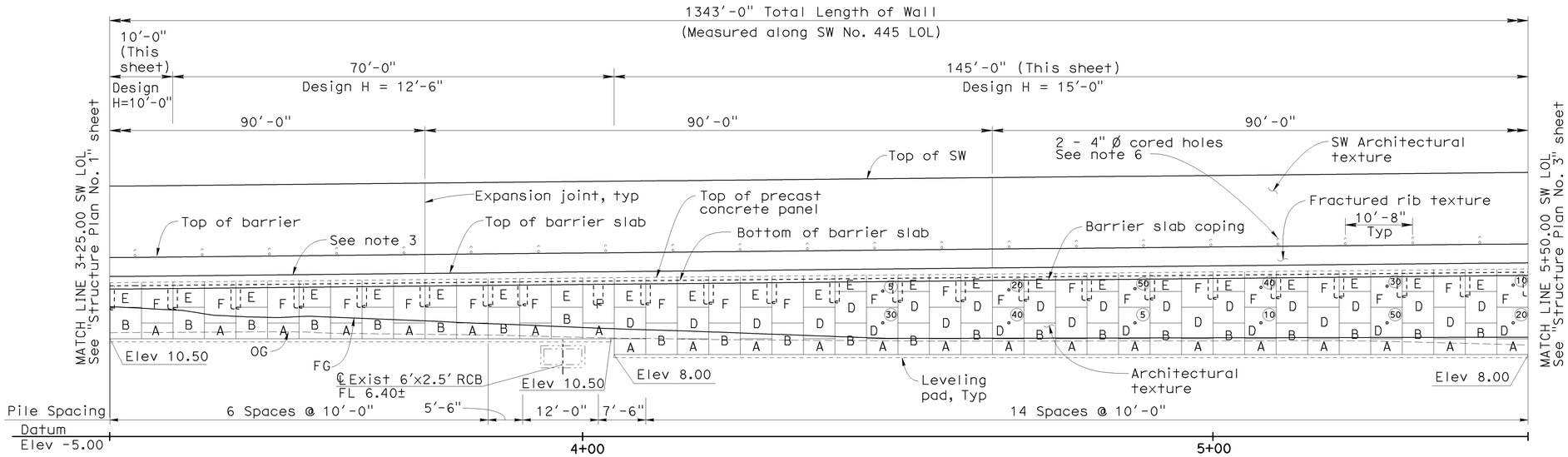

ELEVATION

1" = 10'

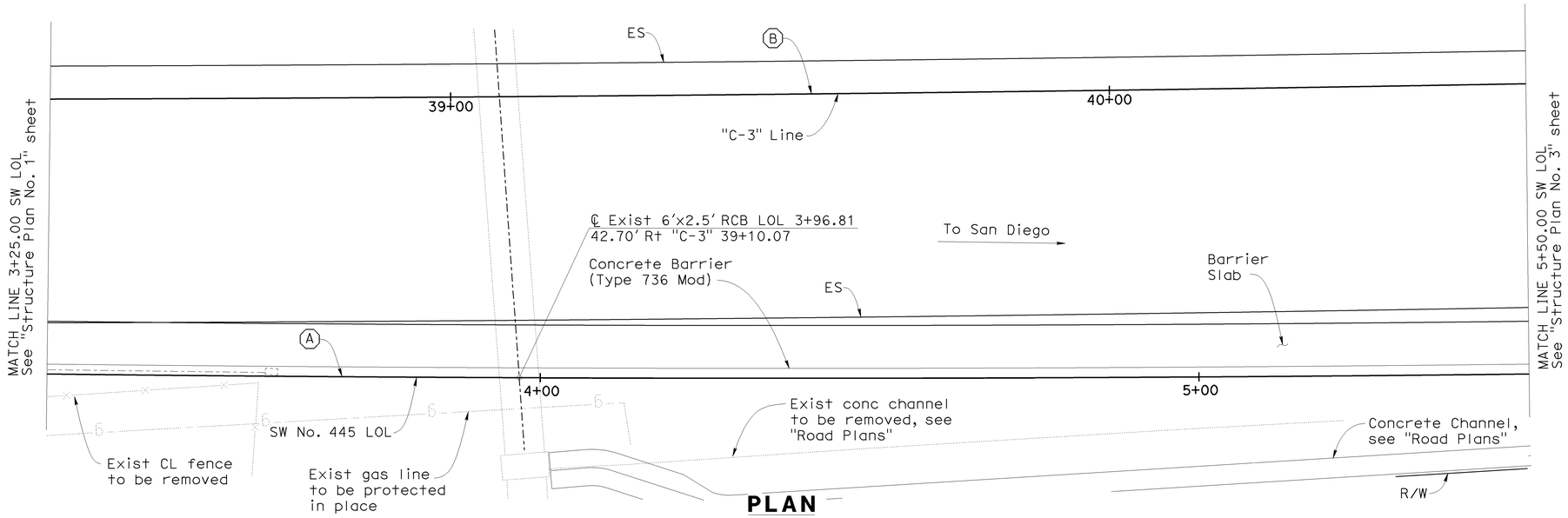

PLAN

1" = 10'

LEGEND:

- 30 — Indicates interval in years from time of construction to time of removal of inspection wire
- A — Indicates location of inspection wire, see "Wall Details No. 2" sheet
- Indicates panel type designation (See notes 2 & 3)

NOTES:

1. For Typical Sections, see "General Plan No. 3" sheet
2. For MSE wall details, see "Panel Details No. 1" and "Panel Details No. 2" sheets
3. For top of wall elevations within limits of MSE wall, see "Wall Details No. 2" sheet
4. For sound wall architectural texture, see "Sound Wall Details SW-32" sheet
5. For utilities, see "Utility Plans"
6. For core hole detail, see "Wall Details No. 2" sheet
7. Elevation shown at leveling pad is at top of leveling pad

CURVE DATA

No.	R	Δ	T	L
A	9791.00'	04°03'01"	346.20'	692.12'
B	15130.00'	04°11'37"	553.96'	1107.42'

NOTE:
THE CONTRACTOR SHALL VERIFY ALL CONTROLLING FIELD DIMENSIONS BEFORE ORDERING OR FABRICATING ANY MATERIAL.

Sudhakar Vatti
DESIGN OVERSIGHT Sudhakar Vatti
9-9-09
SIGN OFF DATE

	BY	CHECKED
DESIGN	V. Trinh	K. Nelson
DETAILS	V. Trinh	K. Nelson
QUANTITIES	K. Coates	V. Trinh

PREPARED FOR THE STATE OF CALIFORNIA DEPARTMENT OF TRANSPORTATION

V. Trinh
PROJECT ENGINEER

BRIDGE NO. 55E0103
POST MILE R0.5

SOUND WALL NO. 445
STRUCTURE PLAN NO. 2

DESIGN DETAIL SHEET (ENGLISH) (REV. 2/25/05)

ORIGINAL SCALE IN INCHES FOR REDUCED PLANS 0 1 2 3

CU 12235
EA 071631

DISREGARD PRINTS BEARING EARLIER REVISION DATES

REVISION DATES (PRELIMINARY STAGE ONLY) 04/06/09 7/21/09

SHEET 6 OF 24

FILE => 55-e0103-c-sp02.dgn

USERNAME => trmortin DATE PLOTTED => 04-FEB-2010 TIME PLOTTED => 12:41

DIST	COUNTY	ROUTE	POST MILES TOTAL PROJECT	SHEET No	TOTAL SHEETS
12	Ora	22,405, 605	R0.3/R0.9, 22.3/24.0,3.0/R1.6	1827	1929

REGISTERED CIVIL ENGINEER 7/27/09 DATE

2-1-10
PLANS APPROVAL DATE

REGISTERED PROFESSIONAL ENGINEER Vinh Trinh No. C 50685 Exp. 09-30-09 CIVIL STATE OF CALIFORNIA

The State of California or its officers or agents shall not be responsible for the accuracy or completeness of electronic copies of this plan sheet.

OCTA
550 SOUTH MAIN STREET
ORANGE, CA 92863

WKE, INC.
400 N. TUSTIN AVE, SUITE 285
SANTA ANA, CA 92705

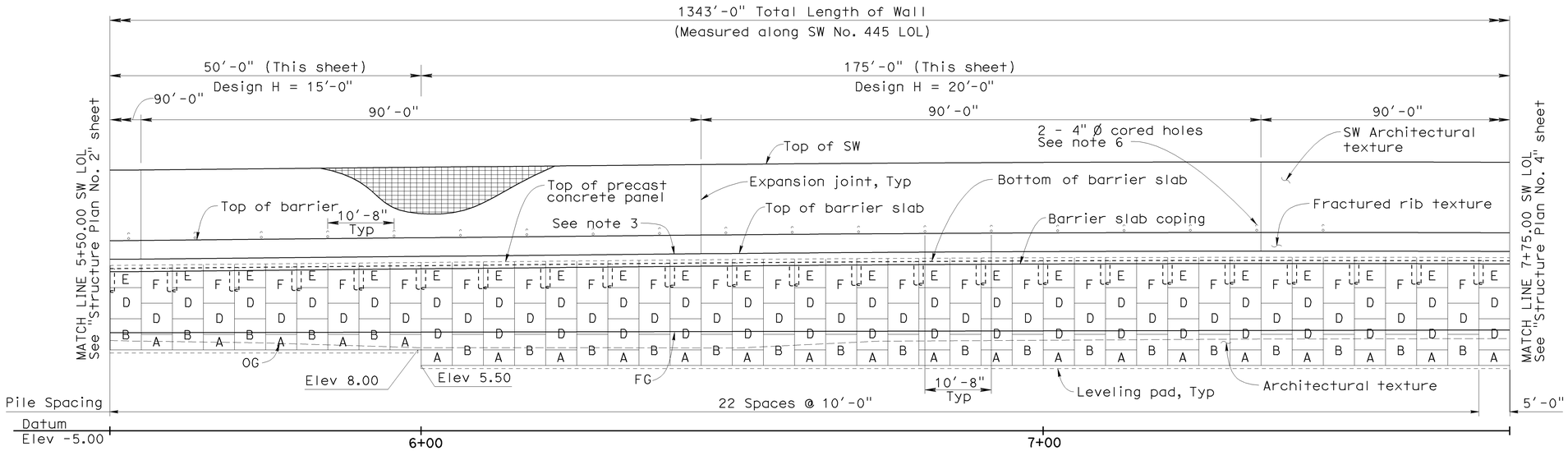

ELEVATION

1" = 10'

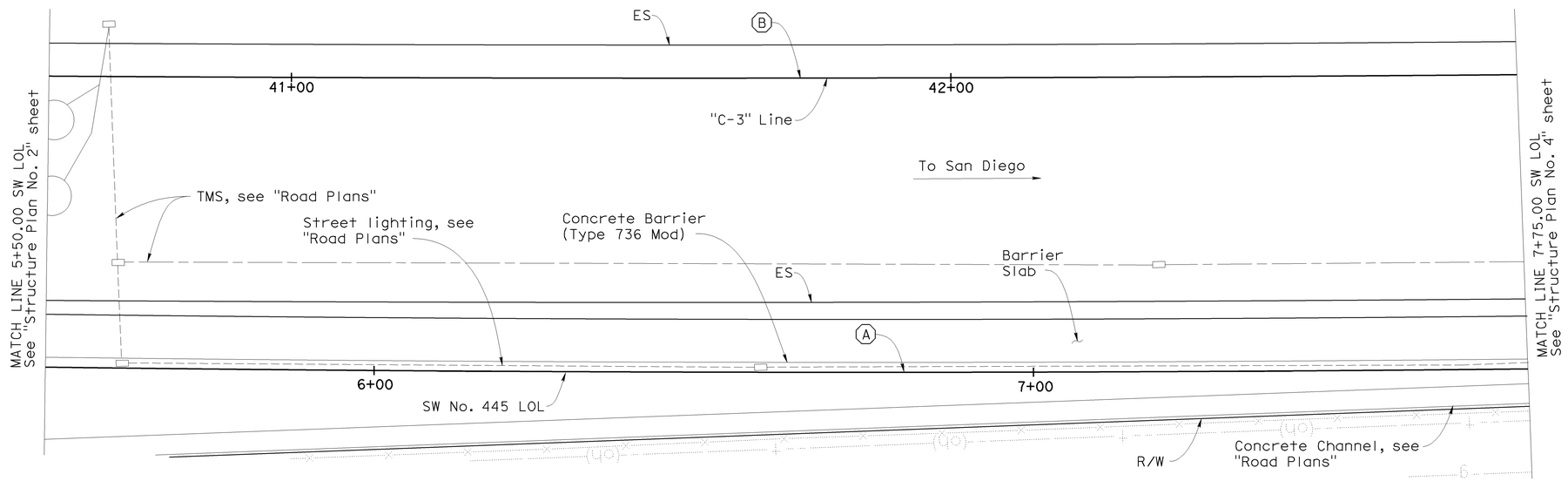

PLAN

1" = 10'

LEGEND:

30 A

- Indicates interval in years from time of construction to time of removal of inspection wire
- Indicates location of inspection wire, see "Wall Details No. 2" sheet
- Indicates panel type designation (See notes 2 & 3)

NOTES:

1. For Typical Sections, see "General Plan No. 3" sheet
2. For MSE wall details, see "Panel Details No. 1" and "Panel Details No. 2" sheets
3. For top of wall elevations within limits of MSE wall, see "Wall Details No. 2" sheet
4. For sound wall architectural texture, see "Sound Wall Details SW-32" sheet.
5. For utilities, see "Utility Plans"
6. For core hole detail, see "Wall Details No. 2" sheet
7. Elevation shown at leveling pad is at top of leveling pad

CURVE DATA

No.	R	Δ	T	L
A	9791.00'	04°03'01"	346.20'	692.12'
B	15130.00'	04°11'37"	553.96'	1107.42'

NOTE:
THE CONTRACTOR SHALL VERIFY ALL CONTROLLING FIELD DIMENSIONS BEFORE ORDERING OR FABRICATING ANY MATERIAL.

Sudhakar Vatti
DESIGN OVERSIGHT Sudhakar Vatti
9-9-09
SIGN OFF DATE

	BY	CHECKED
DESIGN	V. Trinh	K. Nelson
DETAILS	V. Trinh	K. Nelson
QUANTITIES	K. Coates	V. Trinh

PREPARED FOR THE STATE OF CALIFORNIA DEPARTMENT OF TRANSPORTATION

V. Trinh
PROJECT ENGINEER

BRIDGE NO. 55E0103
POST MILE R0.5

SOUND WALL NO. 445
STRUCTURE PLAN NO. 3

DESIGN DETAIL SHEET (ENGLISH) (REV. 2/25/05)

ORIGINAL SCALE IN INCHES FOR REDUCED PLANS 0 1 2 3

CU 12235
EA 071631

DISREGARD PRINTS BEARING EARLIER REVISION DATES
REVISION DATES (PRELIMINARY STAGE ONLY) 04/06/09 7/27/09

SHEET 7 OF 24

FILE => 55-e0103-c-sp03.dgn

USERNAME => trmartin DATE PLOTTED => 04-FEB-2010 TIME PLOTTED => 12:41

DIST	COUNTY	ROUTE	POST MILES TOTAL PROJECT	SHEET No	TOTAL SHEETS
12	Ora	22,405, 605	R0.3/R0.9, 22.3/24.0,3.0/R1.6	1828	1929

REGISTERED CIVIL ENGINEER 7/27/09 DATE

2-1-10
PLANS APPROVAL DATE

The State of California or its officers or agents shall not be responsible for the accuracy or completeness of electronic copies of this plan sheet.

REGISTERED PROFESSIONAL ENGINEER Vinh Trinh No. C 50685 Exp. 09-30-09 CIVIL STATE OF CALIFORNIA

OCTA
550 SOUTH MAIN STREET
ORANGE, CA 92863

WKE, INC.
400 N. TUSTIN AVE, SUITE 285
SANTA ANA, CA 92705

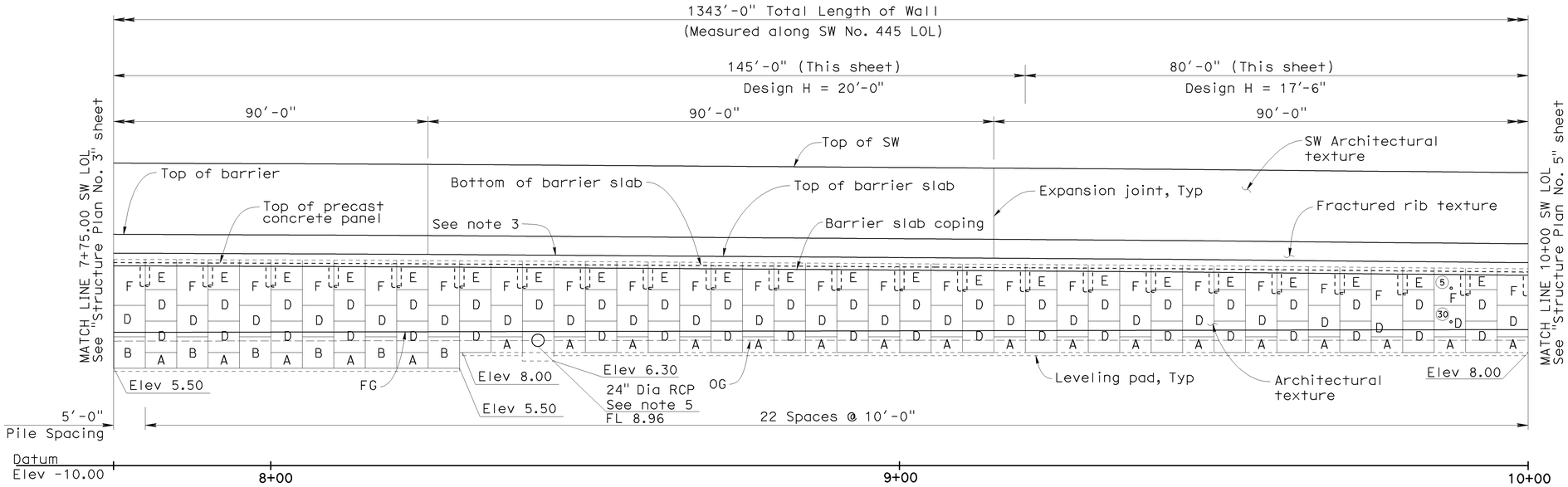

ELEVATION

1" = 10'

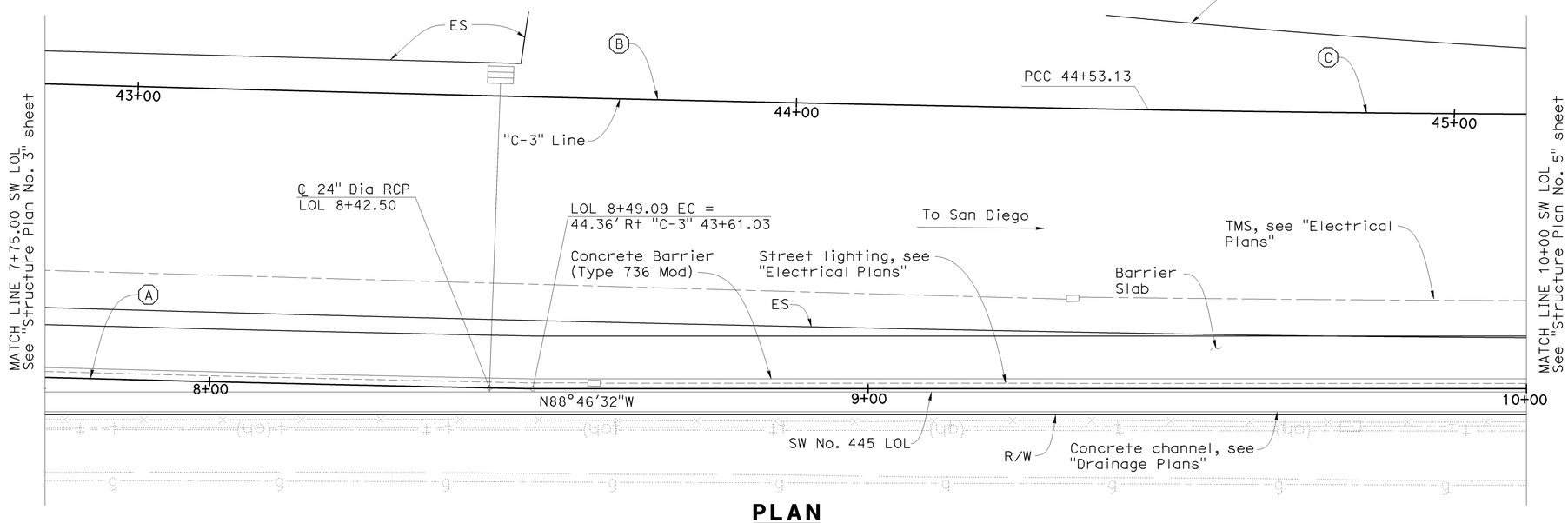

PLAN

1" = 10'

LEGEND:

- 30 / A — Indicates interval in years from time of construction to time of removal of inspection wire
- Indicates location of inspection wire, see "Wall Details No. 2" sheet
- Indicates panel type designation (See notes 2 & 3)

NOTES:

1. For Typical Sections, see "General Plan No. 3" sheet
2. For MSE wall details, see "Panel Details No. 1" and "Panel Details No.2" sheets
3. For top of wall elevations within limits of MSE wall, see "Wall Details No. 2" sheet
4. For sound wall architectural texture, see "Sound Wall Details SW-32" sheet.
5. Cast-in-place wall, see "Wall Details No. 1" sheet
6. For utilities, see "Utility Plans"
7. Elevation shown at leveling pad is at top of leveling pad

CURVE DATA

No.	R	Δ	T	L
A	9791.00'	04°03'01"	346.20'	692.12'
B	15130.00'	04°11'37"	553.96'	1107.42'
C	4400.00'	02°10'20"	83.42'	166.81'

NOTE:
THE CONTRACTOR SHALL VERIFY ALL CONTROLLING FIELD DIMENSIONS BEFORE ORDERING OR FABRICATING ANY MATERIAL.

Sudhakar Vatti
DESIGN OVERSIGHT Sudhakar Vatti
9-9-09
SIGN OFF DATE

	BY	CHECKED
DESIGN	V. Trinh	K. Nelson
DETAILS	V. Trinh	K. Nelson
QUANTITIES	K. Coates	V. Trinh

PREPARED FOR THE STATE OF CALIFORNIA DEPARTMENT OF TRANSPORTATION

V. Trinh
PROJECT ENGINEER

BRIDGE NO. 55E0103
POST MILE R0.5

SOUND WALL NO. 445
STRUCTURE PLAN NO. 4

DESIGN DETAIL SHEET (ENGLISH) (REV. 2/25/05)

ORIGINAL SCALE IN INCHES FOR REDUCED PLANS 0 1 2 3

CU 12235
EA 071631

DISREGARD PRINTS BEARING EARLIER REVISION DATES
REVISION DATES (PRELIMINARY STAGE ONLY) 04/06/09 7/27/09

SHEET 8 OF 24

FILE => 55-e0103-c-sp04.dgn

USERNAME => trmartin DATE PLOTTED => 04-FEB-2010 TIME PLOTTED => 12:41

DIST	COUNTY	ROUTE	POST MILES TOTAL PROJECT	SHEET No	TOTAL SHEETS
12	Ora	22,405, 605	R0.3/R0.9, 22.3/24.0,3.0/R1.6	1829	1929

REGISTERED CIVIL ENGINEER 7/27/09 DATE

2-1-10
PLANS APPROVAL DATE

The State of California or its officers or agents shall not be responsible for the accuracy or completeness of electronic copies of this plan sheet.

REGISTERED PROFESSIONAL ENGINEER Vinh Trinh No. C 50685 Exp. 09-30-09 CIVIL STATE OF CALIFORNIA

OCTA
550 SOUTH MAIN STREET
ORANGE, CA 92863

WKE, INC.
400 N. TUSTIN AVE, SUITE 285
SANTA ANA, CA 92705

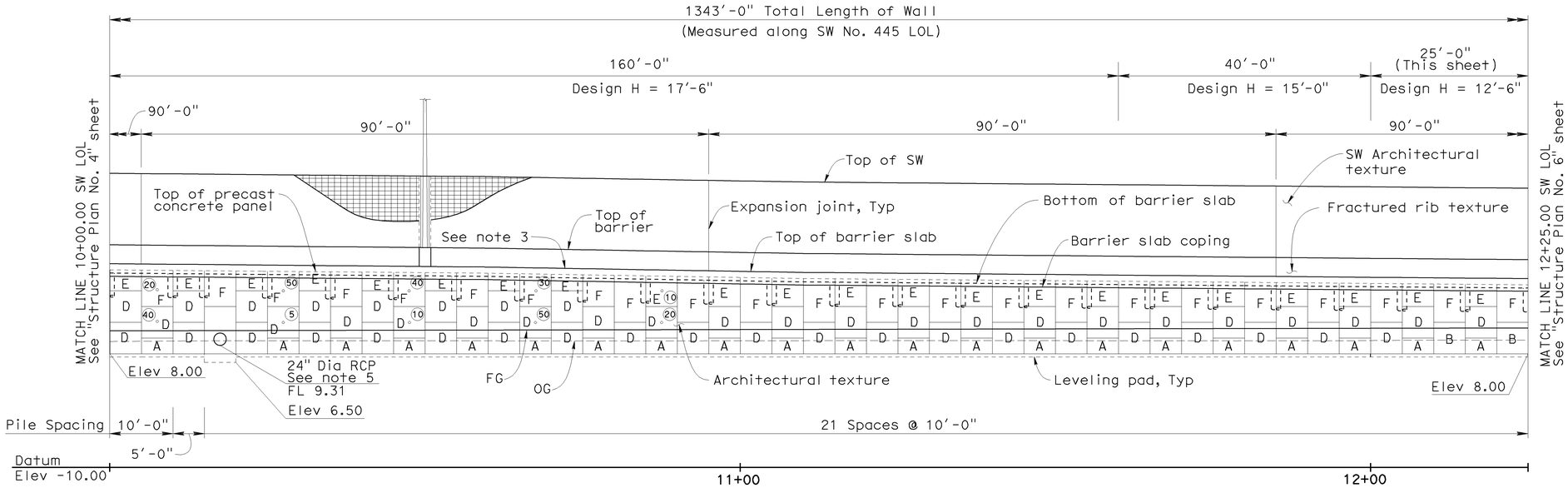

ELEVATION

1" = 10'

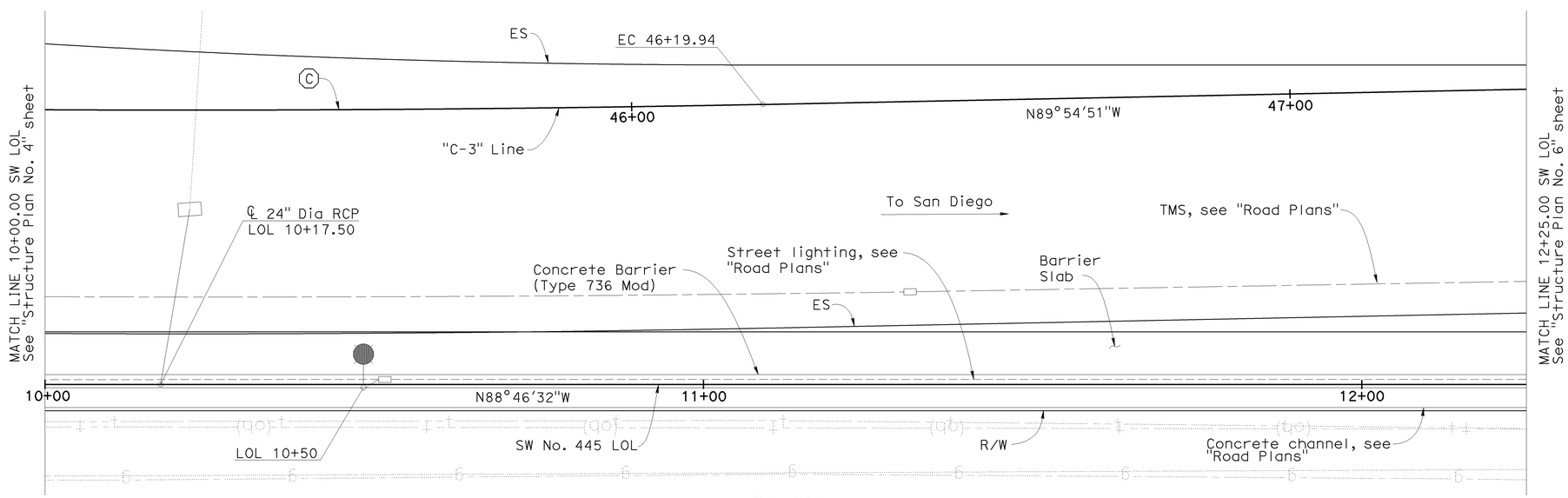

PLAN

1" = 10'

LEGEND:

- (30) A — Indicates interval in years from time of construction to time of removal of inspection wire
- Indicates location of inspection wire, see "Wall Details No. 2" sheet
- Indicates panel type designation (See notes 2 & 3)
- Electrolier, see "Road Plans"

NOTES:

1. For Typical Sections, see "General Plan No. 3" sheet
2. For MSE wall details, see "Panel Details No. 1" and "Panel Details No. 2" sheets
3. For top of wall elevations within limits of MSE wall, see "Wall Details No. 2" sheet
4. For sound wall architectural texture, see "Sound Wall Details SW-32" sheet.
5. Cast-in-place wall, see "Wall Details No. 1" sheet
6. For utilities, see "Utility Plans"
7. Elevation shown at leveling pad is at top of leveling pad

CURVE DATA

No.	R	Δ	T	L
C	4400.00'	02°10'20"	83.42'	166.81'

NOTE:
THE CONTRACTOR SHALL VERIFY ALL CONTROLLING FIELD DIMENSIONS BEFORE ORDERING OR FABRICATING ANY MATERIAL.

Sudhakar Vatti
DESIGN OVERSIGHT Sudhakar Vatti
8-10-09
SIGN OFF DATE

	BY	CHECKED
DESIGN	V. Trinh	K. Nelson
DETAILS	V. Trinh	K. Nelson
QUANTITIES	K. Coates	V. Trinh

PREPARED FOR THE STATE OF CALIFORNIA DEPARTMENT OF TRANSPORTATION

V. Trinh
PROJECT ENGINEER

BRIDGE NO. 55E0103
POST MILE R0.5

SOUND WALL NO. 445
STRUCTURE PLAN NO. 5

DESIGN DETAIL SHEET (ENGLISH) (REV. 2/25/05)

ORIGINAL SCALE IN INCHES FOR REDUCED PLANS 0 1 2 3

CU 12235
EA 071631

DISREGARD PRINTS BEARING EARLIER REVISION DATES

REVISION DATES (PRELIMINARY STAGE ONLY) 04/06/09 7/27/09

SHEET 9 OF 24

FILE => 55-e0103-c-sp05.dgn

USERNAME => vtrinh DATE PLOTTED => 04-FEB-2010 TIME PLOTTED => 12:41

DIST	COUNTY	ROUTE	POST MILES TOTAL PROJECT	SHEET No	TOTAL SHEETS
12	Ora	22,405, 605	R0.3/R0.9 22.3/24.0,3.0/R1.6	1830	1929

REGISTERED CIVIL ENGINEER 7/27/09 DATE

2-1-10
PLANS APPROVAL DATE

REGISTERED PROFESSIONAL ENGINEER Vinh Trinh No. C 50685 Exp. 09-30-09 CIVIL STATE OF CALIFORNIA

The State of California or its officers or agents shall not be responsible for the accuracy or completeness of electronic copies of this plan sheet.

OCTA
550 SOUTH MAIN STREET
ORANGE, CA 92863

WKE, INC.
400 N. TUSTIN AVE, SUITE 285
SANTA ANA, CA 92705

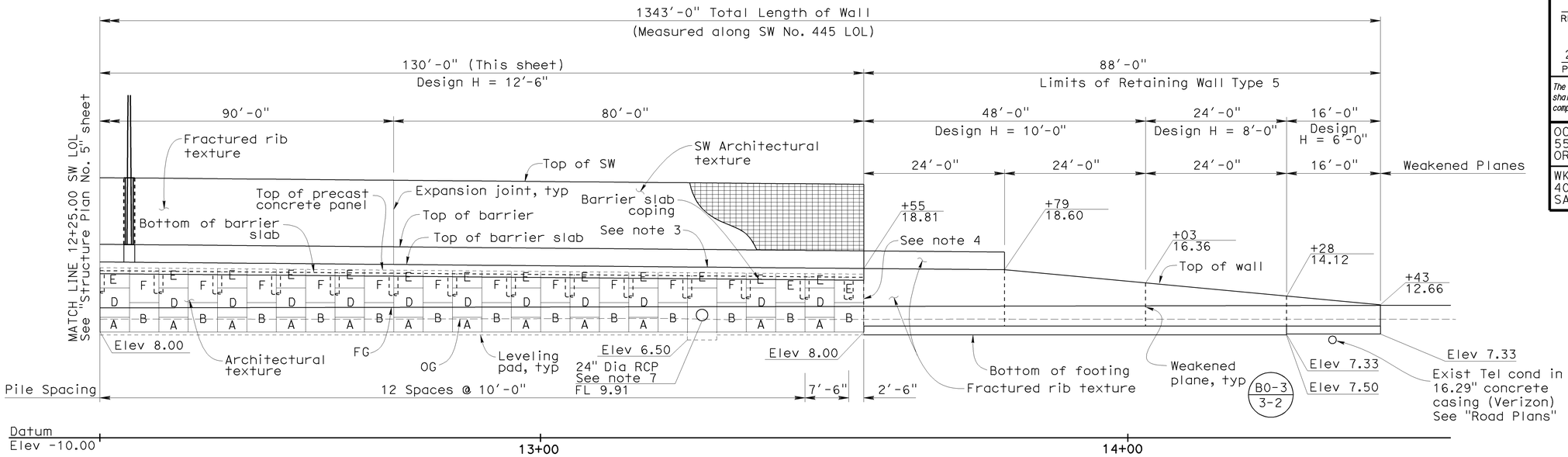

ELEVATION

1" = 10'

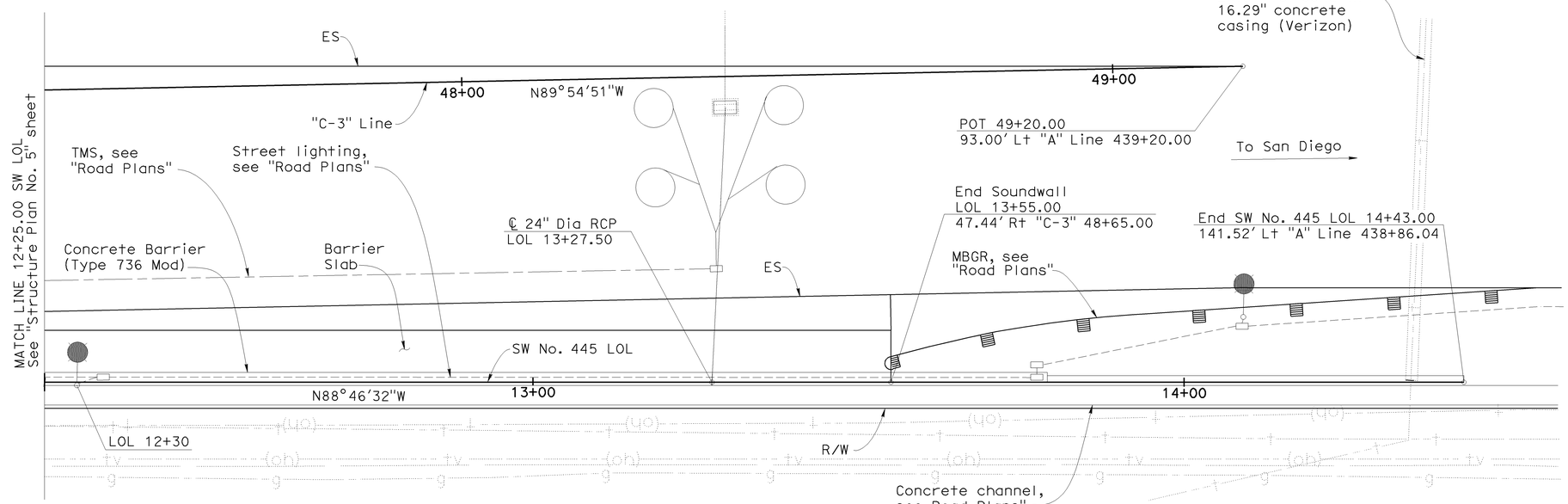

PLAN

1" = 10'

LEGEND:

- 30 / A — Indicates interval in years from time of construction to time of removal of inspection wire
- Indicates location of inspection wire, see "Wall Details No. 2" sheet
- Indicates panel type designation (See notes 2 & 3)
- Electrolier, see "Road Plans"

NOTES:

1. For Typical Sections, see "General Plan No. 3" sheet
2. For MSE wall details, see "Panel Details No. 1" and "Panel Details No. 2" sheets
3. For top of wall elevations within limits of MSE wall, see "Wall Details No. 2" sheet
4. For connection details between MSE wall panels and concrete wall, see "Wall Details No. 2" sheet
5. For sound wall architectural texture, see "Sound Wall Details SW-32" sheet.
6. For utilities, see "Utility Plans"
7. Cast-in-place wall, see "Wall Details No. 1" sheet
8. Elevation shown at leveling pad is at top of leveling pad

NOTE:
THE CONTRACTOR SHALL VERIFY ALL CONTROLLING FIELD DIMENSIONS BEFORE ORDERING OR FABRICATING ANY MATERIAL.

Sudhakar Vatti
DESIGN OVERSIGHT Sudhakar Vatti
8-10-09
SIGN OFF DATE

	BY	CHECKED
DESIGN	V. Trinh	K. Nelson
DETAILS	V. Trinh	K. Nelson
QUANTITIES	K. Coates	V. Trinh

PREPARED FOR THE STATE OF CALIFORNIA DEPARTMENT OF TRANSPORTATION

V. Trinh
PROJECT ENGINEER

BRIDGE NO. 55E0103
POST MILE R0.5

SOUND WALL NO. 445
STRUCTURE PLAN NO. 6

DESIGN DETAIL SHEET (ENGLISH) (REV. 2/25/05)

ORIGINAL SCALE IN INCHES FOR REDUCED PLANS 0 1 2 3

CU 12235
EA 071631

DISREGARD PRINTS BEARING EARLIER REVISION DATES
REVISION DATES (PRELIMINARY STAGE ONLY) 04/06/09 1/27/09

SHEET 10 OF 24

FILE => 55-e0103-c-sp06.dgn

USERNAME => trmorrin DATE PLOTTED => 04-FEB-2010 TIME PLOTTED => 12:41

DIST	COUNTY	ROUTE	POST MILES TOTAL PROJECT	SHEET No	TOTAL SHEETS
12	Ora	22,405, 605	R0.3/R0.9, 22.3/24.0,3.0/R1.6	1831	1929

REGISTERED CIVIL ENGINEER — DATE 7/27/09

2-1-10
PLANS APPROVAL DATE

REGISTERED PROFESSIONAL ENGINEER — Vinh Trinh — No. C 50685 — Exp. 09-30-09 — CIVIL — STATE OF CALIFORNIA

The State of California or its officers or agents shall not be responsible for the accuracy or completeness of electronic copies of this plan sheet.

OCTA
550 SOUTH MAIN STREET
ORANGE, CA 92863

WKE, INC.
400 N. TUSTIN AVE, SUTE 285
SANTA ANA, CA 92705

NOTES:

1. Place reinforced elastomeric bearing pads in all of the panel joints. Place one in each vertical joint at intersections with horizontal joints. Place two per panel in each horizontal joint.
   3/4 " x 2 3/8 " x 6" for vertical joints
   3/4 " x 4" x 6" for horizontal joints
2. Top of Panels E and F shall be cast to conform to wall profile.
3. Omit wire mat when vertical spacing between mats is less than 6"
4. Top welded wire mat in wall shall be sloped -5% min to -15% max with respect to the roadway slope. Wire mats below the top level may be sloped down as required to maintain 6" min separation from other mats
5. For fractured rib texture, see "Architectural Details" sheet.

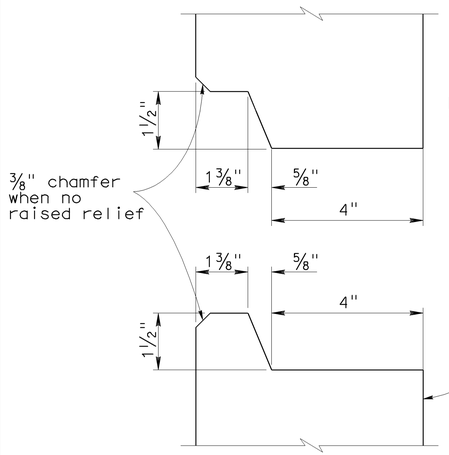

HORIZONTAL JOINT DETAIL

6" = 1'-0"

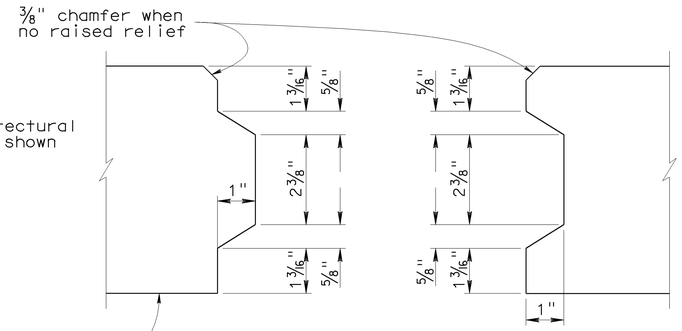

VERTICAL JOINT DETAIL

6" = 1'-0"

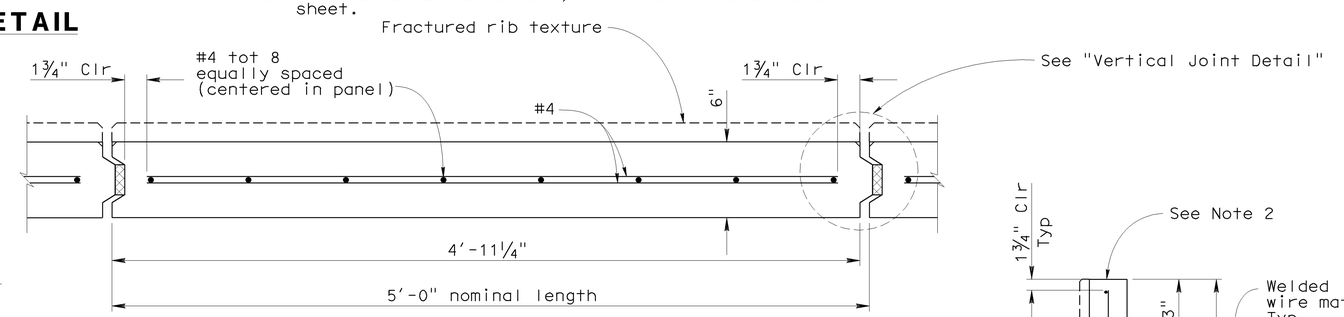

PRECAST PANEL PLAN

2" = 1'-0"

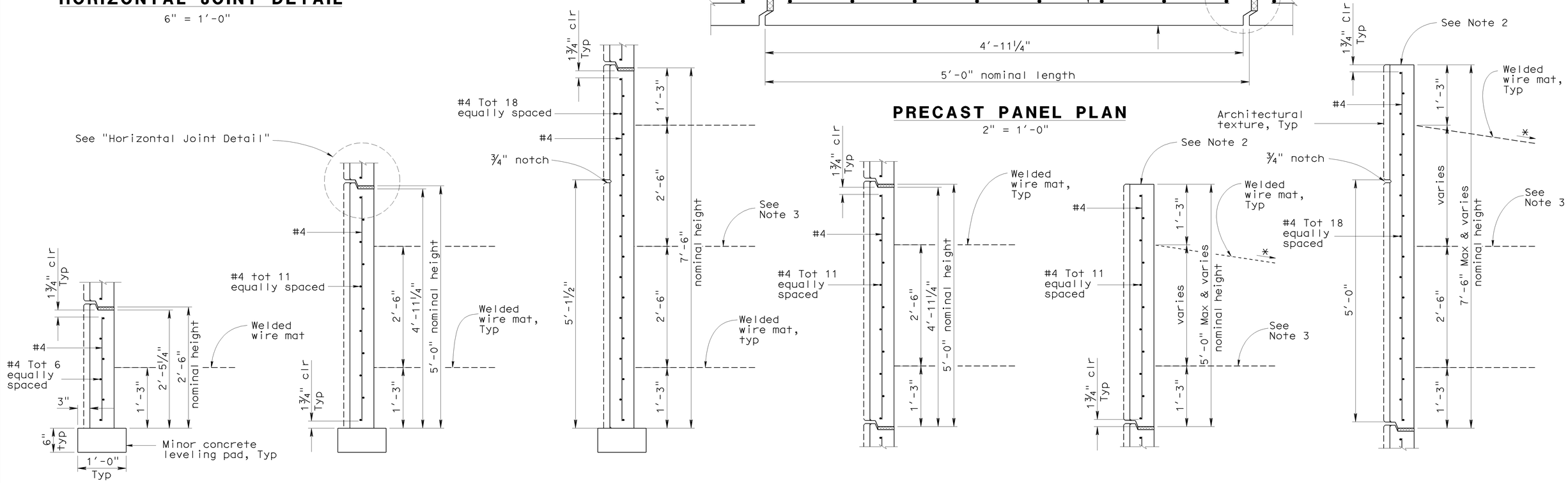

PANEL A — PANEL B — PANEL C — PANEL D — PANEL E — PANEL F

PRECAST PANEL SECTIONS

1" = 1'-0"
* See Note 4

NOTE:
THE CONTRACTOR SHALL VERIFY ALL CONTROLLING FIELD DIMENSIONS BEFORE ORDERING OR FABRICATING ANY MATERIAL.

Sudhakar Vatti
DESIGN OVERSIGHT — Sudhakar Vatti
8-10-09
SIGN OFF DATE

	BY	CHECKED
DESIGN	V. Trinh	K. Nelson
DETAILS	V. Trinh	K. Nelson
QUANTITIES	K. Coates	V. Trinh

PREPARED FOR THE STATE OF CALIFORNIA DEPARTMENT OF TRANSPORTATION

V. Trinh
PROJECT ENGINEER

BRIDGE NO. 55E0103
POST MILE R0.5

SOUND WALL NO. 445
PANEL DETAILS NO. 1

DESIGN DETAIL SHEET (ENGLISH) (REV. 2/25/05)

ORIGINAL SCALE IN INCHES FOR REDUCED PLANS 0 1 2 3

CU 12235
EA 071631

DISREGARD PRINTS BEARING EARLIER REVISION DATES — REVISION DATES (PRELIMINARY STAGE ONLY) 04/06/09 7/27/09

SHEET 11 OF 24

FILE => 55-e0103-g-pdt01.dgn

USERNAME => trmartin DATE PLOTTED => 04-FEB-2010 TIME PLOTTED => 12:41

DIST	COUNTY	ROUTE	POST MILES TOTAL PROJECT	SHEET No	TOTAL SHEETS
12	Ora	22,405, 605	R0.3/R0.9, 22.3/24.0,3.0/R1.6	1832	1929

REGISTERED CIVIL ENGINEER 7/27/09 DATE

2-1-10
PLANS APPROVAL DATE

REGISTERED PROFESSIONAL ENGINEER Vinh Trinh No. C 50685 Exp. 09-30-09 CIVIL STATE OF CALIFORNIA

The State of California or its officers or agents shall not be responsible for the accuracy or completeness of electronic copies of this plan sheet.

OCTA
550 SOUTH MAIN STREET
ORANGE, CA 92863

WKE, INC.
400 N. TUSTIN AVE, SUITE 285
SANTA ANA, CA 92705

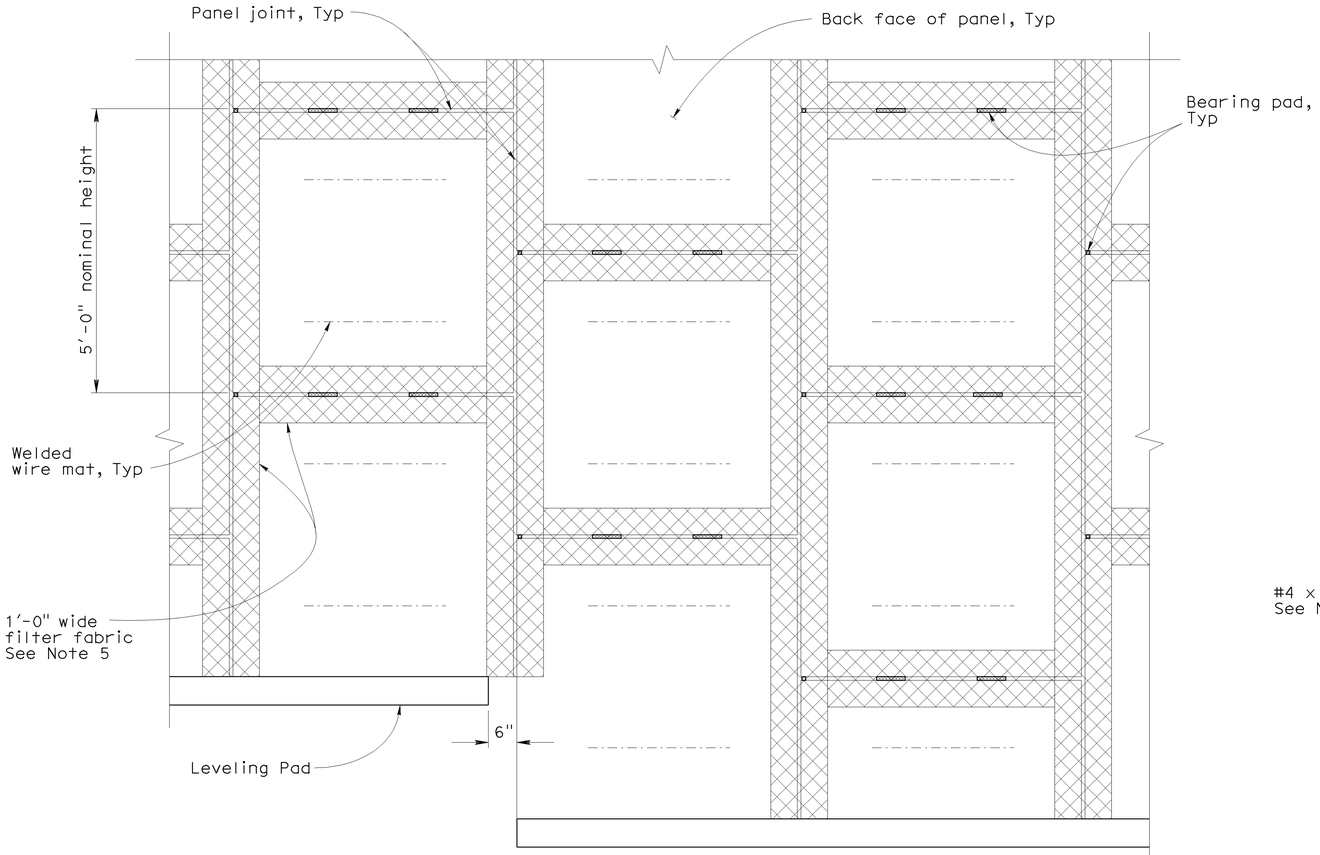

BACK FACE OF WALL ELEVATION

3/4" = 1'-0"

NOTES:

1. Distance as required to permit coupler to be swaged
2. Place bar centered on connector mat but not welded to it
3. Length equals "Base width" of wall as shown in the "Soil Reinforcement Table," except it shall not be less than 16'-0" for the top 2 levels of mats at the top of the wall
4. See the "Soil Reinforcement Table" for wire size and transverse wire spacing
5. Bond a strip of filter fabric 1'-0" wide over the full length of all panel joints

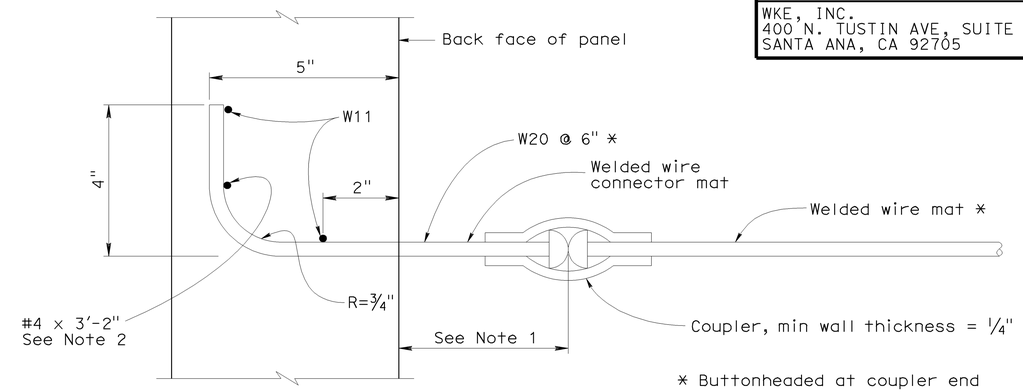

* Buttonheaded at coupler end

NOTE: Panel reinforcement not shown

SECTION A-A

NO SCALE

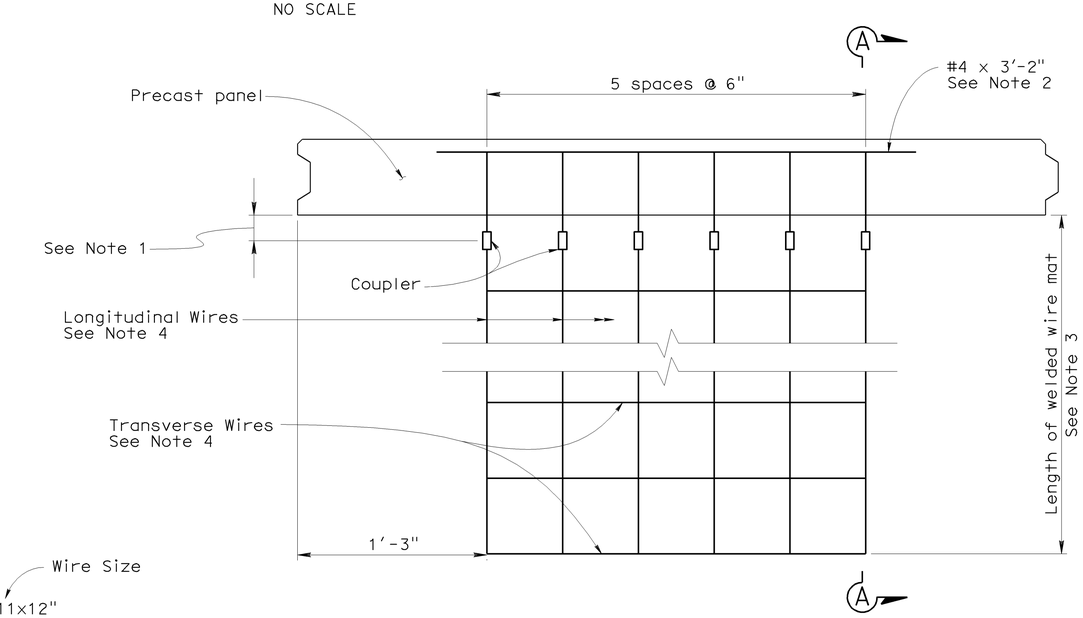

WELDED WIRE MAT DETAIL

NO SCALE

SOIL REINFORCEMENT TABLE

Design "H"	10'-0"	12'-6"	15'-0"	17'-6"	20'-0"
Base Width	8'-0"	9'-0"	11'-0"	12'-0"	14'-0"
Top level of mesh: Levels below:	1-W11x6" 3-W11x9"	1-W11x6" 2-W11x9" 2-W11x12"	1-W11x6" 2-W11x9" 2-W11x12" W11x18"	1-W11x6" 2-W11x9" 2-W11x12" 2-W11x18"	1-W11x6" 2-W11x9" 2-W11x12" 3-W11x18"

NOTE: Mesh is indicated sequentially from top level of mesh to bottom level of mesh.

LEGEND:

of levels — Wire Size

2-W11x12"

Transverse Spacing

NOTE:
THE CONTRACTOR SHALL VERIFY ALL CONTROLLING FIELD DIMENSIONS BEFORE ORDERING OR FABRICATING ANY MATERIAL.

Sudhakar Vatti
DESIGN OVERSIGHT Sudhakar Vatti
8-10-09
SIGN OFF DATE

	BY	CHECKED
DESIGN	V. Trinh	K. Nelson
DETAILS	V. Trinh	K. Nelson
QUANTITIES	K. Coates	V. Trinh

PREPARED FOR THE STATE OF CALIFORNIA DEPARTMENT OF TRANSPORTATION

V. Trinh
PROJECT ENGINEER

BRIDGE NO. 55E0103
POST MILE R0.5

SOUND WALL NO. 445
PANEL DETAILS NO. 2

DESIGN DETAIL SHEET (ENGLISH) (REV. 2/25/05)

ORIGINAL SCALE IN INCHES FOR REDUCED PLANS 0 1 2 3

CU 12235
EA 071631

DISREGARD PRINTS BEARING EARLIER REVISION DATES

REVISION DATES (PRELIMINARY STAGE ONLY) 04/06/09 7/27/09

SHEET 12 OF 24

FILE => 55-e0103-g-pdt02.dgn

USERNAME => trmartin DATE PLOTTED => 04-FEB-2010 TIME PLOTTED => 12:43

DIST	COUNTY	ROUTE	POST MILES TOTAL PROJECT	SHEET No	TOTAL SHEETS
12	Ora	22,405, 605	R0.3/R0.9 22.3/24.0,3.0/R1.6	1833	1929

REGISTERED CIVIL ENGINEER 7/27/09 DATE

2-1-10
PLANS APPROVAL DATE

REGISTERED PROFESSIONAL ENGINEER Vinh Trinh No. C 50685 Exp. 09-30-09 CIVIL STATE OF CALIFORNIA

The State of California or its officers or agents shall not be responsible for the accuracy or completeness of electronic copies of this plan sheet.

OCTA
550 SOUTH MAIN STREET
ORANGE, CA 92863

WKE, INC.
400 N. TUSTIN AVE, SUITE 285
SANTA ANA, CA 92705

NOTES:

1. No expansion joints in concrete barrier or barrier slab within MSE wall units.

LEGEND:

1. 1½" to 3" Expanded polystyrene recessed 2" into barrier slab at front of MSE face panel.
2. 1" Expanded polystyrene.
3. Five elastomeric bearing pads ¾" x 4" x 6" bonded to top of each MSE precast panel.
4. ¾" Expanded polystyrene.
5. #5 4'-7" @ 1'-0" bundled with (6) bars
6. #5 1'-3¾" 5'-0" @ 1'-0"

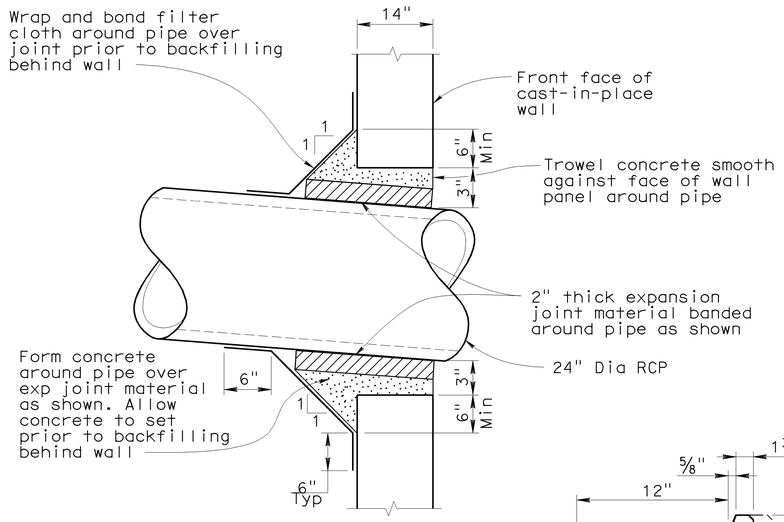

SECTION B-B
NO SCALE

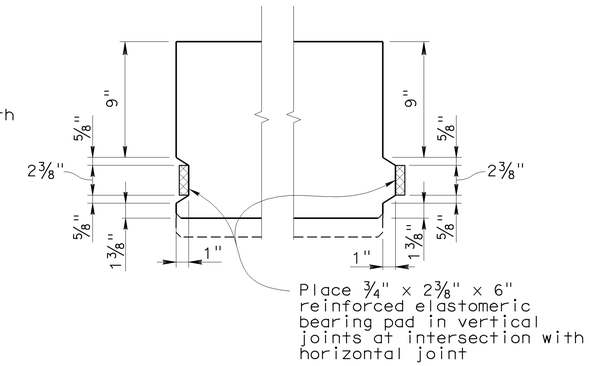

VERTICAL JOINT DETAIL
NO SCALE

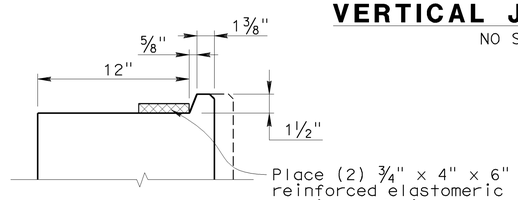

DETAIL A
NO SCALE

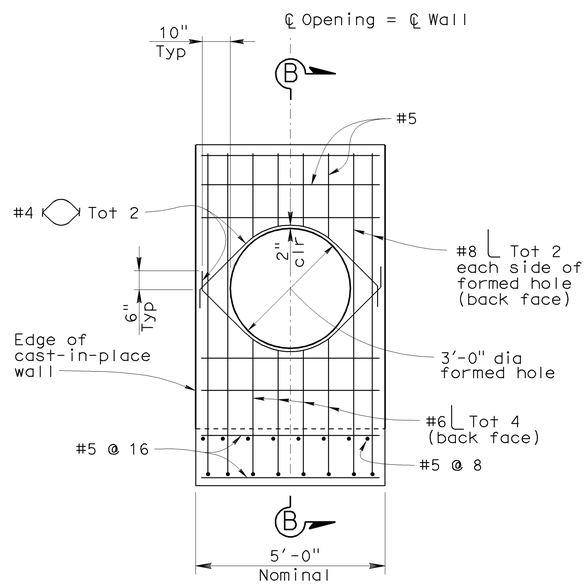

CAST-IN-PLACE WALL HOLE DETAIL
NO SCALE

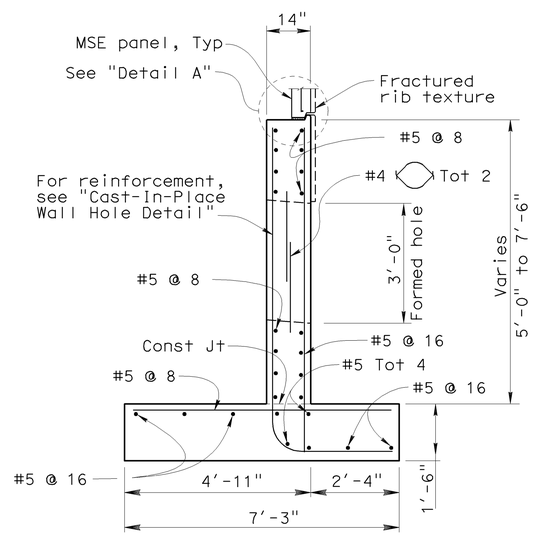

CAST-IN-PLACE WALL
NO SCALE

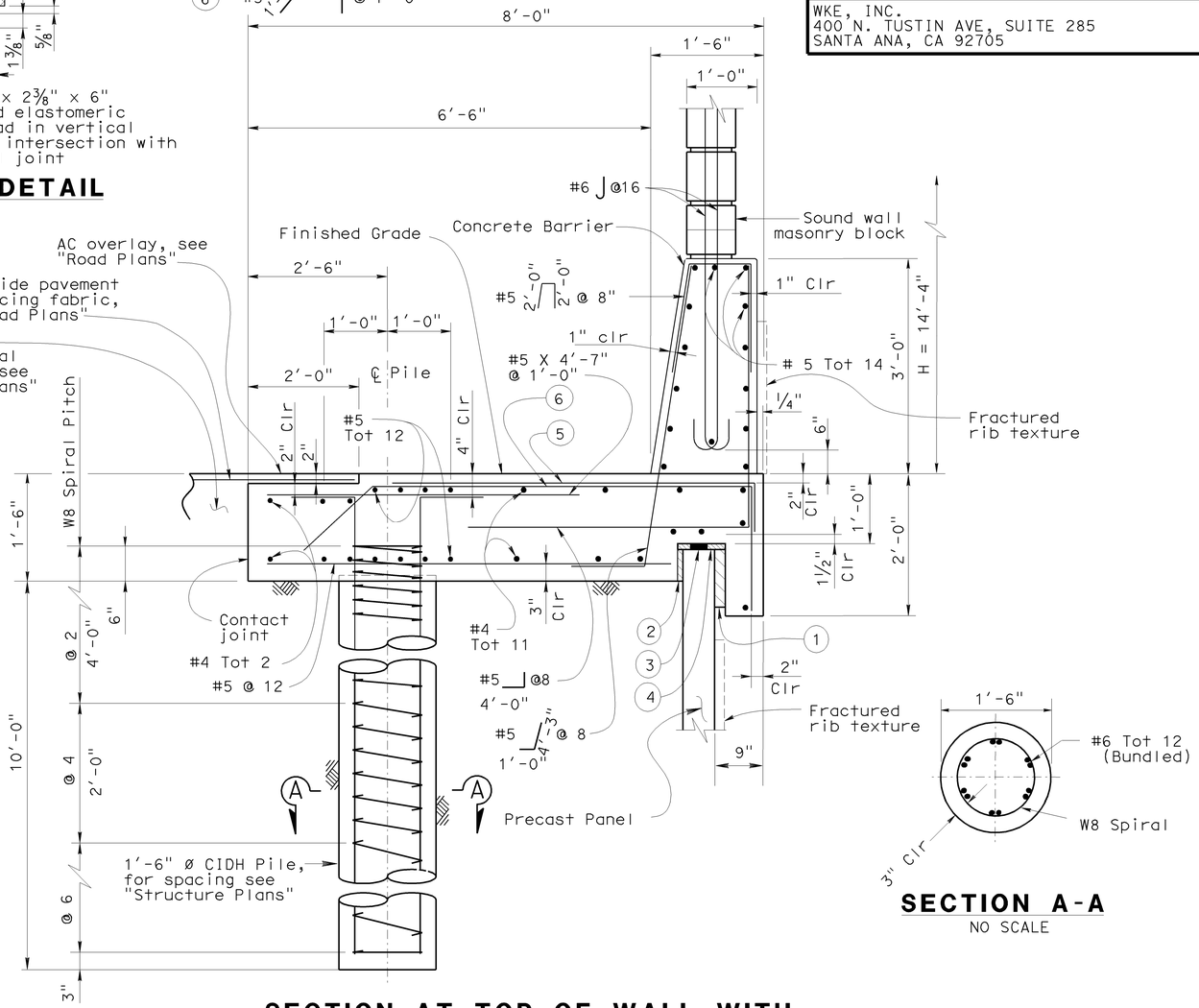

SECTION AT TOP OF WALL WITH SOUNDWALL AND CONCRETE BARRIER
NO SCALE

SECTION A-A
NO SCALE

NOTE:
THE CONTRACTOR SHALL VERIFY ALL CONTROLLING FIELD DIMENSIONS BEFORE ORDERING OR FABRICATING ANY MATERIAL.

Sudhakar Vatti
DESIGN OVERSIGHT Sudhakar Vatti
8-10-09
SIGN OFF DATE

	BY	CHECKED
DESIGN	V. Trinh	K. Nelson
DETAILS	V. Trinh	K. Nelson
QUANTITIES	K. Coates	V. Trinh

PREPARED FOR THE STATE OF CALIFORNIA DEPARTMENT OF TRANSPORTATION

V. Trinh
PROJECT ENGINEER

BRIDGE NO. 55E0103
POST MILE R0.5

SOUND WALL NO. 445
WALL DETAILS NO. 1

DESIGN DETAIL SHEET (ENGLISH) (REV. 2/25/05)

ORIGINAL SCALE IN INCHES FOR REDUCED PLANS 0 1 2 3

CU 12235
EA 071631

DISREGARD PRINTS BEARING EARLIER REVISION DATES → REVISION DATES (PRELIMINARY STAGE ONLY) 04/06/09 7/27/09

SHEET 13 OF 24

FILE => 55-e0103-g-wdt01.dgn

USERNAME => trmartin DATE PLOTTED => 04-FEB-2010 TIME PLOTTED => 12:41

DIST	COUNTY	ROUTE	POST MILES TOTAL PROJECT	SHEET No	TOTAL SHEETS
12	Ora	22,405, 605	R0.3/R0.9, 22.3/24.0,3.0/R1.6	1834	1929

REGISTERED CIVIL ENGINEER 7/27/09 DATE

2-1-10
PLANS APPROVAL DATE

REGISTERED PROFESSIONAL ENGINEER Vinh Trinh No. C 50685 Exp. 09-30-09 CIVIL STATE OF CALIFORNIA

The State of California or its officers or agents shall not be responsible for the accuracy or completeness of electronic copies of this plan sheet.

OCTA
550 SOUTH MAIN STREET
ORANGE, CA 92863

WKE, INC.
400 N. TUSTIN AVE, SUITE 285
SANTA ANA, CA 92705

TOP OF WALL ELEVATIONS

RW 445 LOL Station	Top of Wall Elevation (ft)
2+85.00	19.89
3+00.00	20.05
3+20.00	20.09
3+40.00	20.28
3+60.00	20.66
3+80.00	20.87
4+00.00	21.07
4+20.00	21.26
4+40.00	21.45
4+60.00	21.65
4+80.00	21.84
5+00.00	22.03
5+20.00	22.22
5+40.00	22.41
5+60.00	22.61
5+80.00	22.80
6+00.00	22.99
6+20.00	23.18
6+40.00	23.37
6+60.00	23.53
6+80.00	23.66
7+00.00	23.76
7+20.00	23.81
7+40.00	23.83
7+60.00	23.81
7+80.00	23.76
8+00.00	23.69
8+20.00	23.62

RW 445 LOL Station	Top of Wall Elevation (ft)
8+40.00	23.52
8+60.00	23.39
8+80.00	23.26
9+00.00	23.11
9+20.00	22.99
9+40.00	22.85
9+60.00	22.67
9+80.00	22.49
10+00.00	22.30
10+20.00	22.12
10+40.00	21.95
10+60.00	21.77
10+80.00	21.43
11+00.00	21.09
11+20.00	20.84
11+40.00	20.66
11+60.00	20.49
11+80.00	20.32
12+00.00	20.15
12+20.00	19.98
12+40.00	19.80
12+60.00	19.63
12+80.00	19.46
13+00.00	19.29
13+20.00	19.11
13+40.00	18.94
13+55.00	18.80

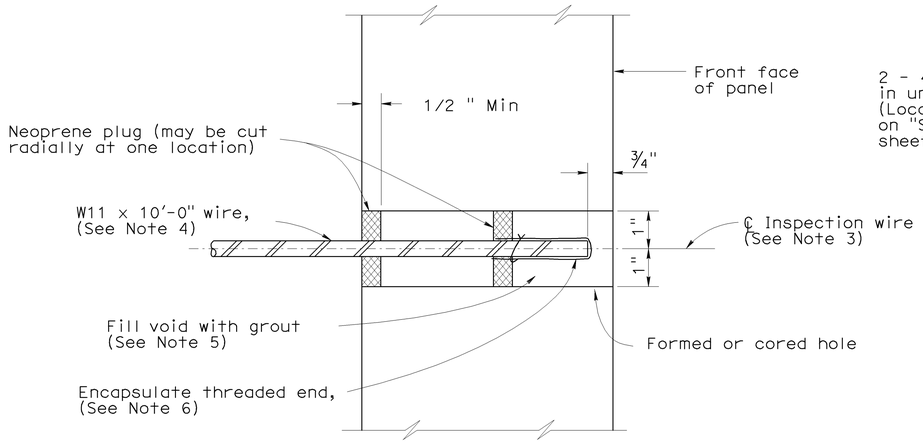

SECTION THRU INSPECTION WIRE

No Scale

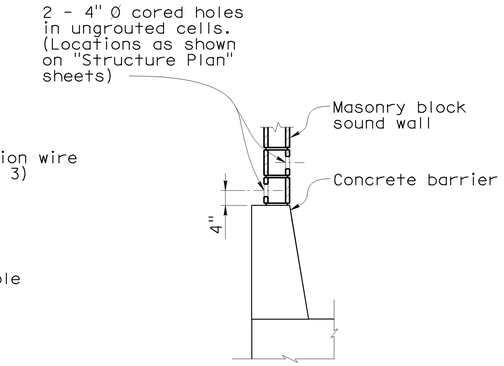

CORE HOLE DETAIL

1/2" = 1'-0"

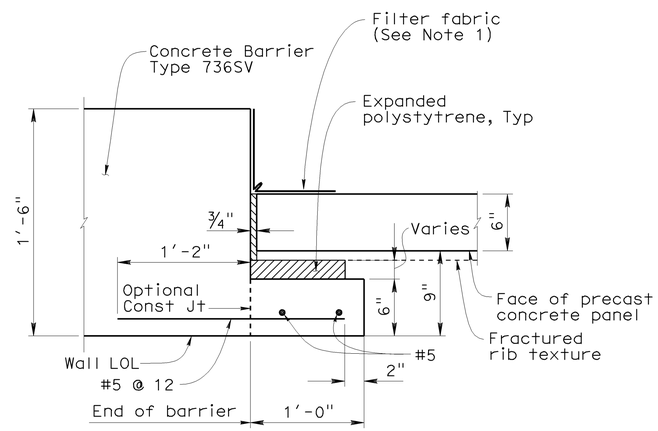

PRECAST PANEL TO BARRIER JOINT DETAIL

No Scale

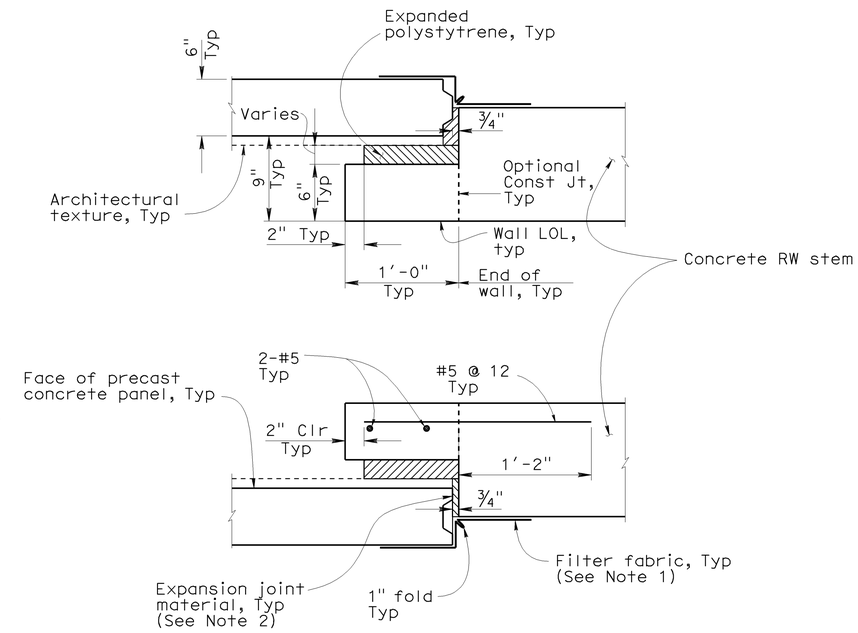

PRECAST PANEL TO CONCRETE WALL JOINT DETAILS

No Scale

NOTES:

1. Bond a strip of filter fabric, 1'-6" wide, to back of precast concrete panels and the adjacent concrete wall for entire length of vertical joint
2. Bond expansion joint material to the concrete wall
3. Center inspection wire in panel
4. Fabricate inspection wires from W11 wire representative of the welded wire mats, with 3/8" dia - 16 UNC threads (Unified Coarse threads) for at least 1 1/2" of one end
5. Place inspection wire horizontal and perpendicular to the wall panel prior to backfilling. After backfill placement to a level at least 2'-0" above the inspection wire, dry pack opening with 1000 to 1500 psi mortar. Trowel mortar smooth and flush with face of panel
6. Encapsulate threaded end with corrosion inhibiting mastic and secure round vinyl cover with nylon tie

NOTE:
THE CONTRACTOR SHALL VERIFY ALL CONTROLLING FIELD DIMENSIONS BEFORE ORDERING OR FABRICATING ANY MATERIAL.

Sudhakar Vatti
DESIGN OVERSIGHT Sudhakar Vatti
9-9-09
SIGN OFF DATE

	BY	CHECKED
DESIGN	V. Trinh	K. Nelson
DETAILS	V. Trinh	K. Nelson
QUANTITIES	K. Coates	V. Trinh

PREPARED FOR THE STATE OF CALIFORNIA DEPARTMENT OF TRANSPORTATION

V. Trinh
PROJECT ENGINEER

BRIDGE NO. 55E0103
POST MILE R0.5

SOUND WALL NO. 445
WALL DETAILS NO. 2

DESIGN DETAIL SHEET (ENGLISH) (REV. 2/25/05)

ORIGINAL SCALE IN INCHES FOR REDUCED PLANS 0 1 2 3

CU 12235
EA 071631

DISREGARD PRINTS BEARING EARLIER REVISION DATES

REVISION DATES (PRELIMINARY STAGE ONLY) 04/06/09 7/27/09

SHEET 14 OF 24

FILE => 55-e0103-g-wdt02.dgn

USERNAME => trmartin DATE PLOTTED => 04-FEB-2010 TIME PLOTTED => 12:41

DIST	COUNTY	ROUTE	POST MILES TOTAL PROJECT	SHEET No	TOTAL SHEETS
12	Ora	22,405, 605	R0.3/R0.9, 22.3/24.0,3.0/R1.6	1835	1929

REGISTERED CIVIL ENGINEER 7/27/09 DATE

2-1-10
PLANS APPROVAL DATE

REGISTERED PROFESSIONAL ENGINEER Vinh Trinh No. C 50685 Exp. 09-30-09 CIVIL STATE OF CALIFORNIA

The State of California or its officers or agents shall not be responsible for the accuracy or completeness of electronic copies of this plan sheet.

OCTA
550 SOUTH MAIN STREET
ORANGE, CA 92863

WKE, INC.
400 N. TUSTIN AVE, SUITE 285
SANTA ANA, CA 92705

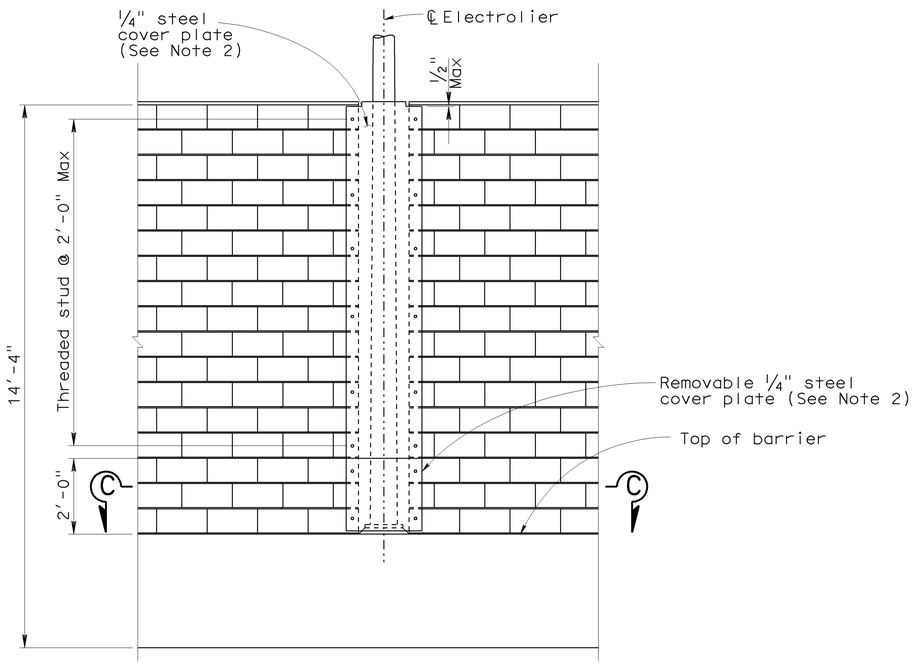

SOUND WALL ELEVATION AT ELECTROLIER

NO SCALE

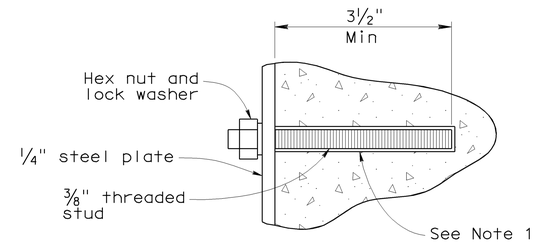

THREADED STUD ANCHORAGE

No Scale

NOTES:

1. Anchor threaded stud into drilled hole with epoxy adhesive in accordance with manufacturer recommendations
2. Paint steel plate to match color of block wall

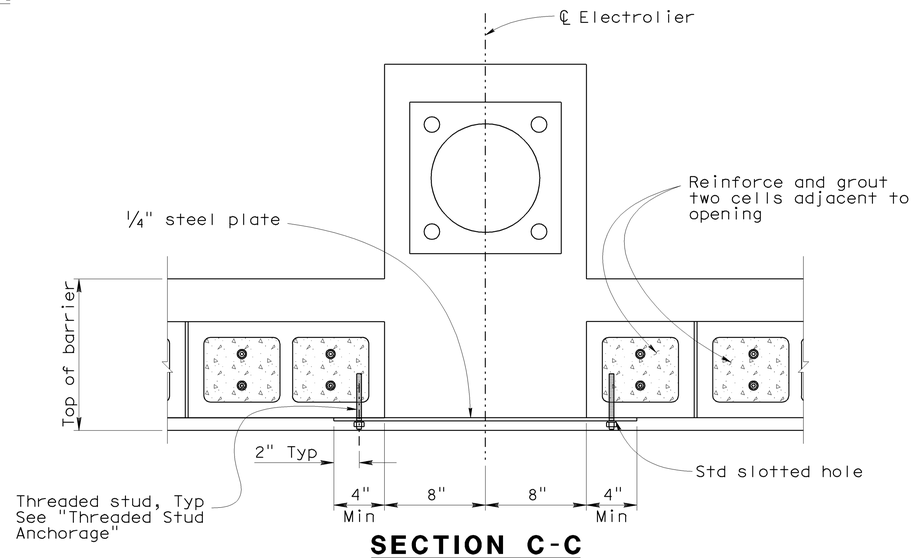

SECTION C-C

NO SCALE

NOTE:
THE CONTRACTOR SHALL VERIFY ALL CONTROLLING FIELD DIMENSIONS BEFORE ORDERING OR FABRICATING ANY MATERIAL.

Sudhakar Vatti
DESIGN OVERSIGHT Sudhakar Vatti

8-10-09
SIGN OFF DATE

	BY	CHECKED
DESIGN	V. Trinh	K. Nelson
DETAILS	V. Trinh	K. Nelson
QUANTITIES	K. Coates	V. Trinh

PREPARED FOR THE STATE OF CALIFORNIA DEPARTMENT OF TRANSPORTATION

V. Trinh
PROJECT ENGINEER

BRIDGE NO. 55E0103
POST MILE R0.5

SOUND WALL NO. 445
WALL DETAILS NO. 3

DESIGN DETAIL SHEET (ENGLISH) (REV. 2/25/05)

ORIGINAL SCALE IN INCHES FOR REDUCED PLANS 0 1 2 3

CU 12235
EA 071631

DISREGARD PRINTS BEARING EARLIER REVISION DATES → REVISION DATES (PRELIMINARY STAGE ONLY) ~~04/06/09~~ 7/21/09

SHEET 15 OF 24

FILE => 55-e0103-g-wdt03.dgn

USERNAME => trmartin DATE PLOTTED => 04-FEB-2010 TIME PLOTTED => 12:42

DIST	COUNTY	ROUTE	POST MILES TOTAL PROJECT	SHEET No	TOTAL SHEETS
12	Ora	22, 405, 605	R0.3/R0.9, 22.3/24.0,3.0/R1.6	1836	1929

LICENSED LANDSCAPE ARCHITECT

2-1-10
PLANS APPROVAL DATE

LICENSED LANDSCAPE ARCHITECT
CATHY L. JOHNSON
NO. 4545
01-31-10
Renewal Date
07-27-09
Date
STATE OF CALIFORNIA

The State of California or its officers or agents shall not be responsible for the accuracy or completeness of electronic copies of this plan sheet.

OCTA
550 SOUTH MAIN STREET
ORANGE, CA 92863

RBF CONSULTING
14725 ALTON PARKWAY
IRVINE, CA 92618

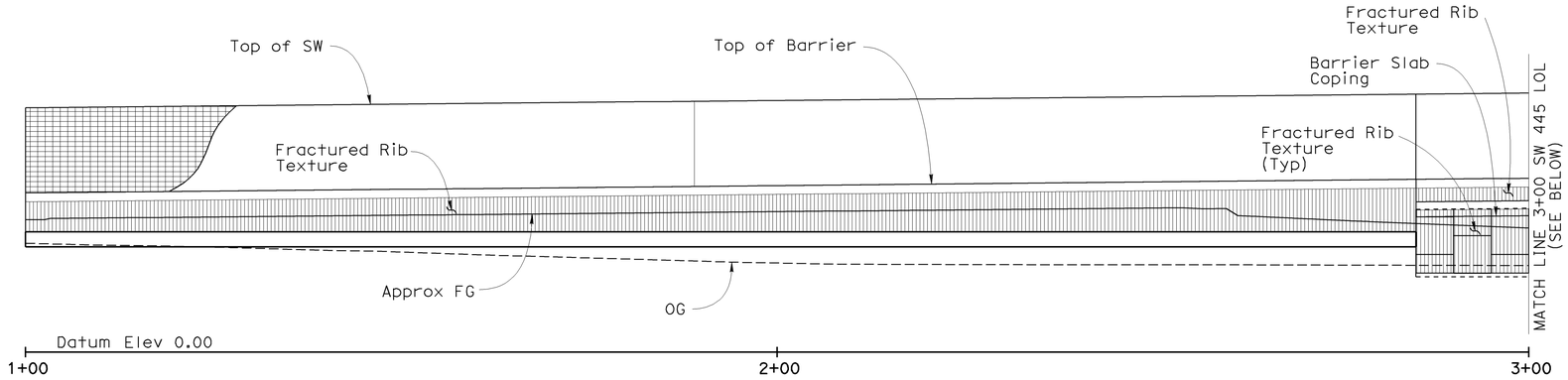

ELEVATION (SEGMENT 1)

1" = 10'

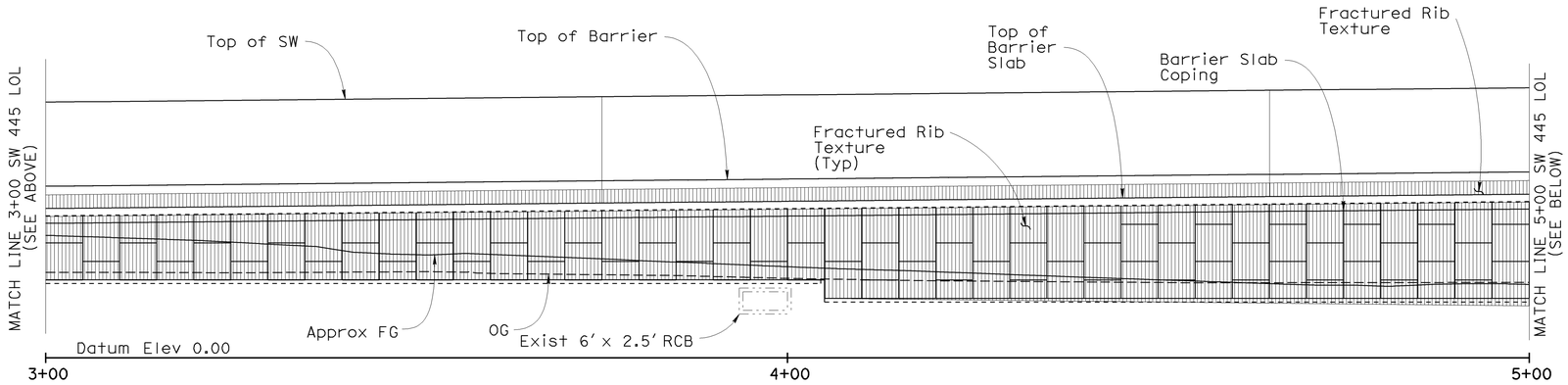

ELEVATION (SEGMENT 2)

1" = 10'

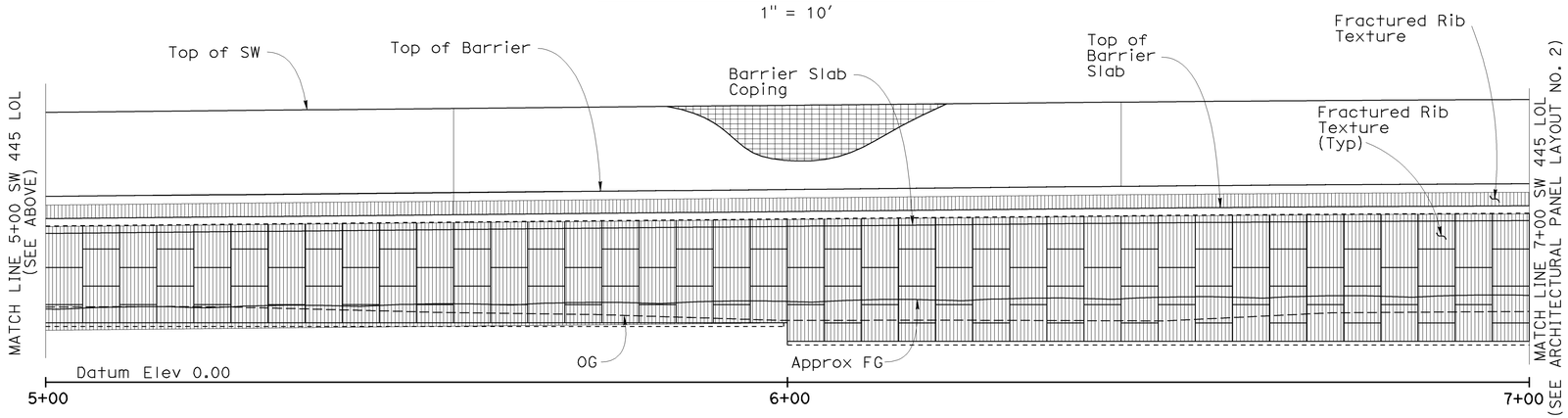

ELEVATION (SEGMENT 3)

1" = 10'

Sudhakar Vatti
DESIGN OVERSIGHT Sudhakar Vatti
8-10-09
SIGN OFF DATE

	BY	CHECKED
DESIGN	C. JOHNSON	A. SU
DETAILS	R. KELCHER	A. SU
QUANTITIES	V. TRINH	J. WONG

PREPARED FOR THE STATE OF CALIFORNIA DEPARTMENT OF TRANSPORTATION

V. TRINH
PROJECT ENGINEER

BRIDGE NO. 55E0103
POST MILE R0.5

SOUND WALL NO. 445
ARCHITECTURAL PANEL LAYOUT NO. 1

DESIGN DETAIL SHEET (ENGLISH) (REV. 2/25/05)

ORIGINAL SCALE IN INCHES FOR REDUCED PLANS 0 1 2 3

CU 12235
EA 071631

DISREGARD PRINTS BEARING EARLIER REVISION DATES

REVISION DATES (PRELIMINARY STAGE ONLY) 04/06/09 07/27/09

SHEET 16 OF 24

FILE => 55-e0103-s-arch01.dgn

USERNAME => ttmartin DATE PLOTTED => 04-FEB-2010 TIME PLOTTED => 12:42

DIST	COUNTY	ROUTE	POST MILES TOTAL PROJECT	SHEET No	TOTAL SHEETS
12	Ora	22,405, 605	R0.3/R0.9, 22.3/24.0,3.0/R1.6	1837	1929

LICENSED LANDSCAPE ARCHITECT

2-1-10
PLANS APPROVAL DATE

LICENSED LANDSCAPE ARCHITECT CATHY L. JOHNSON NO. 4545 01-31-10 Renewal Date 07-27-09 Date STATE OF CALIFORNIA

The State of California or its officers or agents shall not be responsible for the accuracy or completeness of electronic copies of this plan sheet.

OCTA
550 SOUTH MAIN STREET
ORANGE, CA 92863

RBF CONSULTING
14725 ALTON PARKWAY
IRVINE, CA 92618

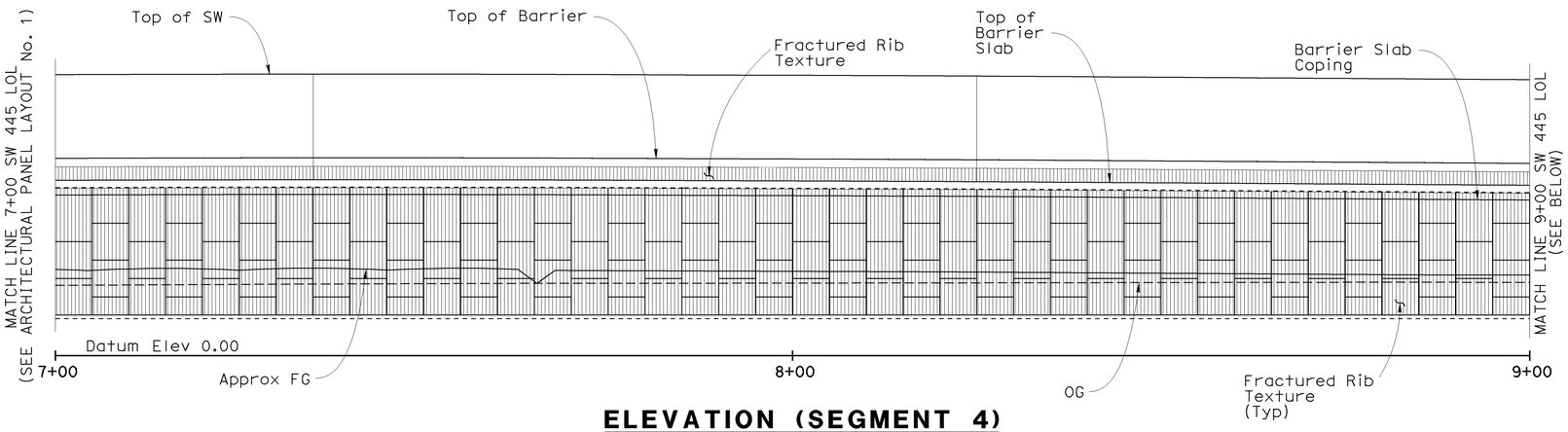

ELEVATION (SEGMENT 4)

1" = 10'

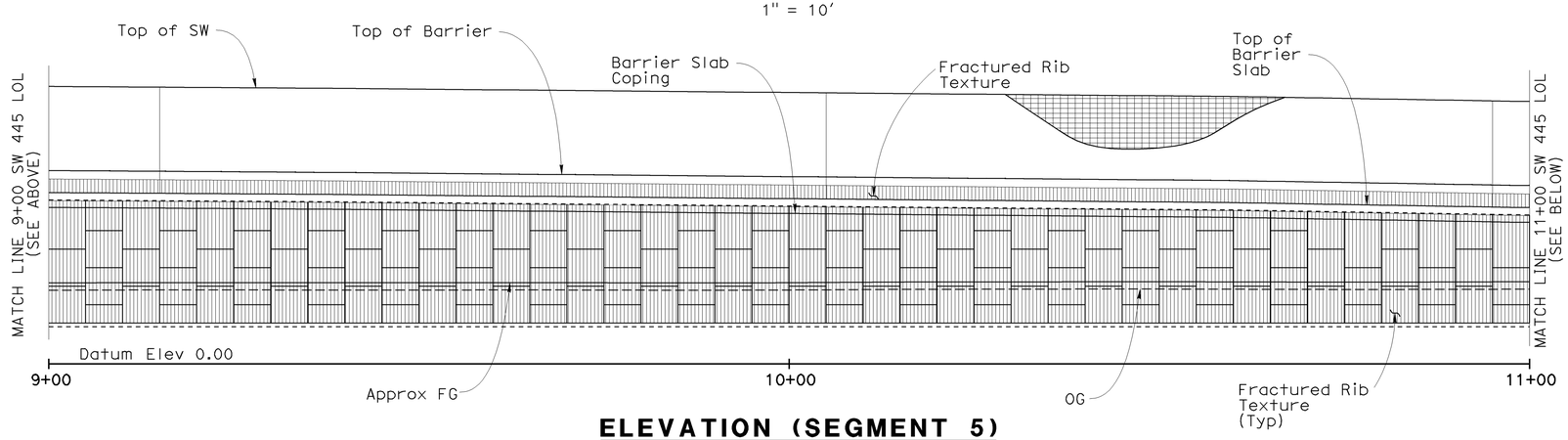

ELEVATION (SEGMENT 5)

1" = 10'

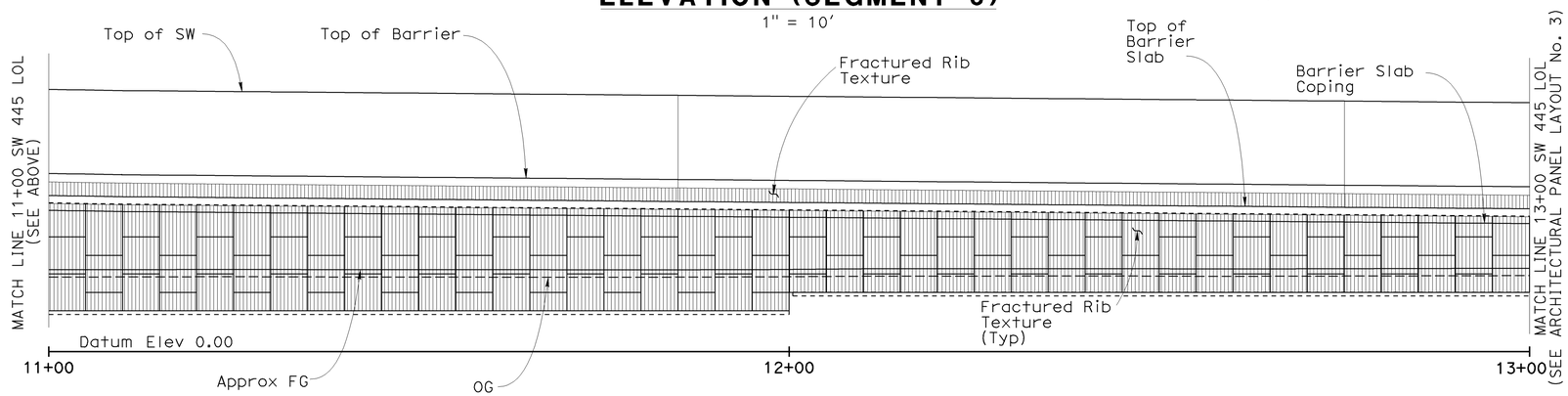

ELEVATION (SEGMENT 6)

1" = 10'

Sudhakar Vatti
DESIGN OVERSIGHT Sudhakar Vatti
8-10-09
SIGN OFF DATE

	BY	CHECKED
DESIGN	C. JOHNSON	A. SU
DETAILS	R. KELCHER	A. SU
QUANTITIES	V. TRINH	J. WONG

PREPARED FOR THE STATE OF CALIFORNIA DEPARTMENT OF TRANSPORTATION

V. TRINH
PROJECT ENGINEER

BRIDGE NO. 55E0103
POST MILE R0.5

SOUND WALL NO. 445
ARCHITECTURAL PANEL LAYOUT NO. 2

DESIGN DETAIL SHEET (ENGLISH) (REV. 2/25/05)

ORIGINAL SCALE IN INCHES FOR REDUCED PLANS 0 1 2 3

CU 12235
EA 071631

DISREGARD PRINTS BEARING EARLIER REVISION DATES
REVISION DATES (PRELIMINARY STAGE ONLY) 04/06/09 07/27/09

SHEET 17 OF 24

FILE => 55-e0103-s-arch02.dgn

USERNAME => rrmorrin DATE PLOTTED => 04-FEB-2010 TIME PLOTTED => 12:42

DIST	COUNTY	ROUTE	POST MILES TOTAL PROJECT	SHEET No	TOTAL SHEETS
12	Ora	22, 405, 605	R0.3/R0.9, 22.3/24.0,3.0/R1.6	1838	1929

LICENSED LANDSCAPE ARCHITECT

2-1-10
PLANS APPROVAL DATE

LICENSED LANDSCAPE ARCHITECT
CATHY L. JOHNSON
NO. 4545
01-31-10
Renewal Date
07-27-09
Date
STATE OF CALIFORNIA

The State of California or its officers or agents shall not be responsible for the accuracy or completeness of electronic copies of this plan sheet.

OCTA
550 SOUTH MAIN STREET
ORANGE, CA 92863

RBF CONSULTING
14725 ALTON PARKWAY
IRVINE, CA 92618

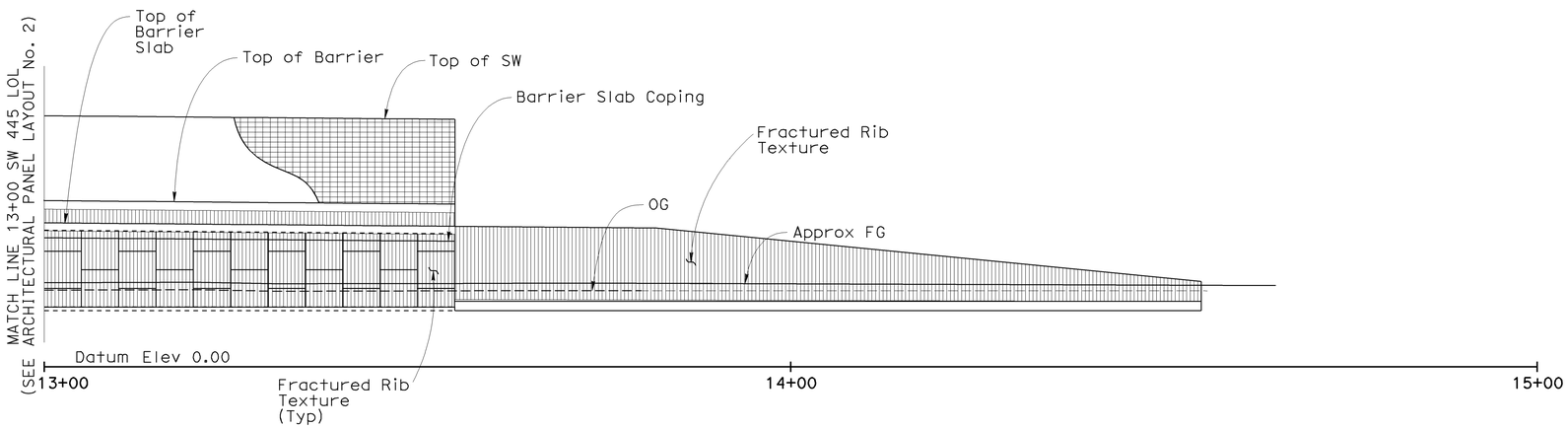

ELEVATION (SEGMENT 7)

1" = 10'

Sudhakar Vatti
DESIGN OVERSIGHT
Sudhakar Vatti
8-10-09
SIGN OFF DATE

	BY	CHECKED
DESIGN	C. JOHNSON	A. SU
DETAILS	R. KELCHER	A. SU
QUANTITIES	V. TRINH	J. WONG

PREPARED FOR THE
STATE OF CALIFORNIA
DEPARTMENT OF TRANSPORTATION

V. TRINH
PROJECT ENGINEER

BRIDGE NO. 55E0103
POST MILE R0.5

SOUND WALL NO. 445
ARCHITECTURAL PANEL LAYOUT NO. 3

DESIGN DETAIL SHEET (ENGLISH) (REV. 2/25/05)

ORIGINAL SCALE IN INCHES FOR REDUCED PLANS 0 1 2 3

CU 12235
EA 071631

DISREGARD PRINTS BEARING EARLIER REVISION DATES

REVISION DATES (PRELIMINARY STAGE ONLY) 04/06/09 07/21/09

SHEET 18 OF 24

FILE => 55-e0103-s-arch03.dgn

USERNAME => trmorthin DATE PLOTTED => 04-FEB-2010 TIME PLOTTED => 12:42

DIST	COUNTY	ROUTE	POST MILES TOTAL PROJECT	SHEET No	TOTAL SHEETS
12	Ora	22, 405, 605	R0.3/R0.9, 22.3/24.0,3.0/R1.6	1839	1929

LICENSED LANDSCAPE ARCHITECT

2-1-10
PLANS APPROVAL DATE

LICENSED LANDSCAPE ARCHITECT
CATHY L. JOHNSON
NO. 4545
01-31-10
Renewal Date
07-27-09
Date
STATE OF CALIFORNIA

The State of California or its officers or agents shall not be responsible for the accuracy or completeness of electronic copies of this plan sheet.

OCTA
550 SOUTH MAIN STREET
ORANGE, CA 92863

RBF CONSULTING
14725 ALTON PARKWAY
IRVINE, CA 92618

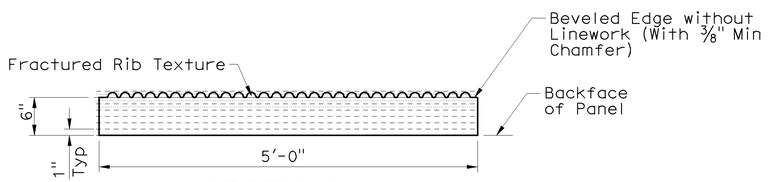

SECTION
1" = 1'-0"

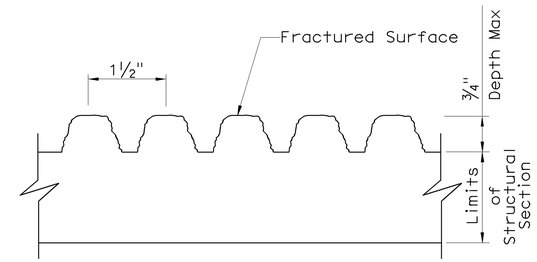

FRACTURED RIB TEXTURE
NO SCALE

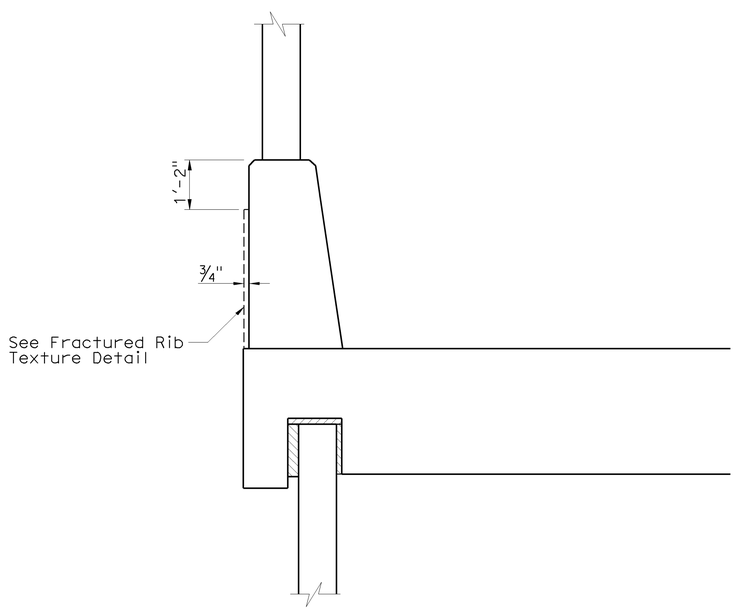

CONCRETE BARRIER (TYPE 736 MOD)
No Scale

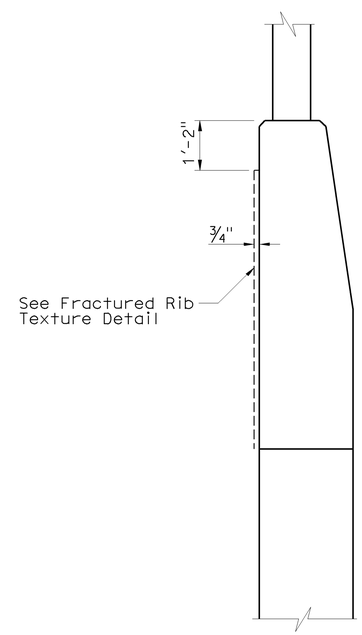

CONCRETE BARRIER (TYPE 736 SV)
NO SCALE

Sudhakar Vatti
DESIGN OVERSIGHT Sudhakar Vatti
8-10-09
SIGN OFF DATE

	BY	CHECKED
DESIGN	C. JOHNSON	A. SU
DETAILS	R. KELCHER	A. SU
QUANTITIES	V. TRINH	J. WONG

PREPARED FOR THE
STATE OF CALIFORNIA
DEPARTMENT OF TRANSPORTATION

V. TRINH
PROJECT ENGINEER

BRIDGE NO. 55E0103
POST MILE R0.5

SOUND WALL NO. 445
ARCHITECTURAL DETAILS

DESIGN DETAIL SHEET (ENGLISH) (REV. 2/25/05)

ORIGINAL SCALE IN INCHES FOR REDUCED PLANS 0 1 2 3

CU 12235
EA 071631

DISREGARD PRINTS BEARING EARLIER REVISION DATES
REVISION DATES (PRELIMINARY STAGE ONLY) 04/06/09 07/27/09

SHEET 19 OF 24

FILE => 55-e0103-s-arch04.dgn

USERNAME => trmartin DATE PLOTTED => 04-FEB-2010 TIME PLOTTED => 12:42

REFERENCE: CALTRANS SOIL & ROCK LOGGING, CLASSIFICATION, AND PRESENTATION MANUAL (JUNE 2007)

DIST	COUNTY	ROUTE	POST MILES TOTAL PROJECT	SHEET No	TOTAL SHEETS
12	Ora	22,405, 605	R0.3/R0.9, 22.3/24.0,3.0/R1.6	1840	1929

REGISTERED CIVIL ENGINEER 07/27/09 DATE

2-1-10
PLANS APPROVAL DATE

REGISTERED PROFESSIONAL ENGINEER K.Arulmoli No. GE 2090 Exp.12-31-09 GEOTECHNICAL STATE OF CALIFORNIA

The State of California or its officers or agents shall not be responsible for the accuracy or completeness of electronic copies of this plan sheet.

OCTA
550 SOUTH MAIN STREET
ORANGE, CA 92863

EARTH MECHANICS, INC.
17660, NEWHOPE STREET, SUITE E
FOUNTAIN VALLEY, CA 92708

CEMENTATION

Description	Criteria
Weak	Crumbles or breaks with handling or little finger pressure.
Moderate	Crumbles or breaks with considerable finger pressure.
Strong	Will not crumble or break with finger pressure.

CONSISTENCY OF COHESIVE SOILS

Description	Unconfined Compressive Strength (tsf)	Pocket Penetrometer Measurement (tsf)	Torvane Measurement (tsf)	Field Approximation
Very Soft	< 0.25	< 0.25	< 0.12	Easily penetrated several inches by fist
Soft	0.25 to 0.50	0.25 to 0.50	0.12 to 0.25	Easily penetrated several inches by thumb
Medium Stiff	0.50 to 1.0	0.50 to 1.0	0.25 to 0.50	Penetrated several inches by thumb with moderate effort
Stiff	1 to 2	1 to 2	0.50 to 1.0	Readily indented by thumb but penetrated only with great effort
Very Stiff	2 to 4	2 to 4	1.0 to 2.0	Readily indented by thumbnail
Hard	> 4.0	> 4.0	> 2.0	Indented by thumbnail with difficulty

BOREHOLE IDENTIFICATION

Symbol	Hole Type	Description
Size	A	Auger Boring
Size	R P	Rotary drilled boring Rotary percussion boring (air)
Size	R	Rotary drilled diamond core
Size	HD HA	Hand driven (1-inch soil tube) Hand Auger
●	D	Dynamic Cone Penetration Boring
▲	CPT	Cone Penetration Test (ASTM D 5778-95)
□	O	Other

Note: Size in inches.

PLASTICITY OF FINE-GRAINED SOILS

Description	Criteria
Nonplastic	A 1/8-inch thread cannot be rolled at any water content.
Low	The thread can barely be rolled and the lump cannot be formed when drier than the plastic limit.
Medium	The thread is easy to roll and not much time is required to reach the plastic limit. The thread cannot be rerolled after reaching the plastic limit. The lump crumbles when drier than the plastic limit.
High	It takes considerable time rolling and kneading to reach the plastic limit. The thread can be rerolled several times after reaching the plastic limit. The lump can be formed without crumbling when drier than the plastic limit.

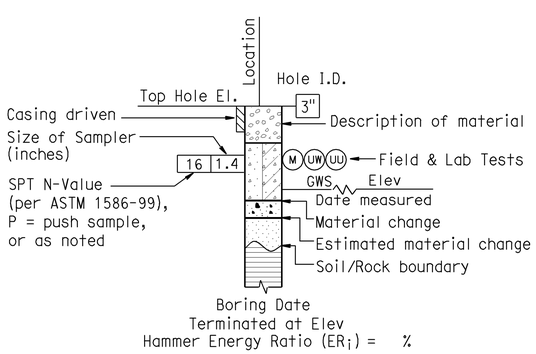

ROTARY BORING

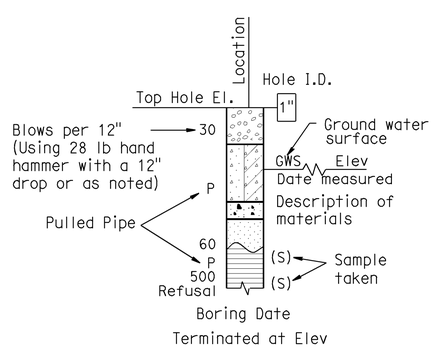

HAND BORING

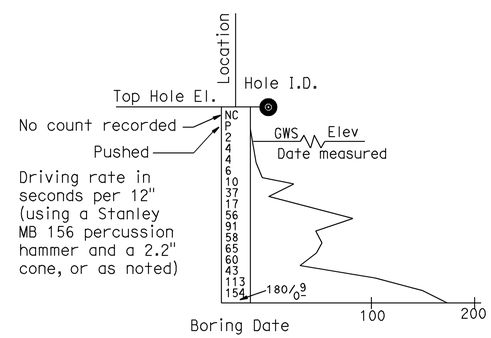

DYNAMIC CONE PENETRATION BORING

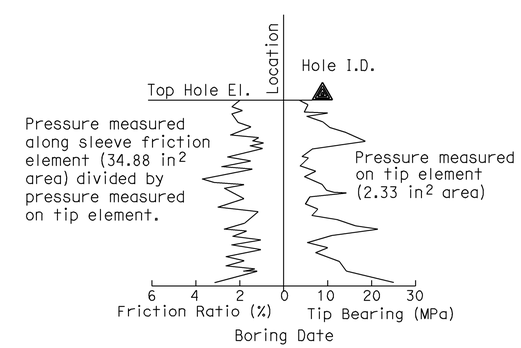

CONE PENETRATION TEST (CPT) SOUNDING

Sudhakar Vatti
DESIGN OVERSIGHT Sudhakar Vatti
8-10-09
SIGN OFF DATE

DRAWN BY: J.Fang
CHECKED BY: G.J.Gunaranjan

FIELD INVESTIGATION BY:
R.Jie

PREPARED FOR THE STATE OF CALIFORNIA DEPARTMENT OF TRANSPORTATION

K.Arulmoli
PROJECT ENGINEER

BRIDGE NO. 55E0103
POST MILE R0.5

SOUND WALL NO 445
LOG OF TEST BORINGS NO. 1

OSF CIVIL LOG OF TEST BORINGS SHEET (ENGLISH) (REV. 2-25-05)

ORIGINAL SCALE IN INCHES FOR REDUCED PLANS 0 1 2 3

CU 12235
EA 071631

DISREGARD PRINTS BEARING EARLIER REVISION DATES
REVISION DATES (PRELIMINARY STAGE ONLY) 03/23/09 04/06/09 07/27/09

SHEET 20 OF 24

FILE => 55-e0103-z-ltb01.dgn

USERNAME => ttmartin DATE PLOTTED => 04-FEB-2010 TIME PLOTTED => 12:42

REFERENCE: CALTRANS SOIL & ROCK LOGGING, CLASSIFICATION, AND PRESENTATION MANUAL (JUNE 2007)

GROUP SYMBOLS AND NAMES

Graphic/Symbol	Group Names
GW	Well-graded GRAVEL Well-graded GRAVEL with SAND
GP	Poorly graded GRAVEL Poorly graded GRAVEL with SAND
GW-GM	Well-graded GRAVEL with SILT Well-graded GRAVEL with SILT and SAND
GW-GC	Well-graded GRAVEL with CLAY (or SILTY CLAY) Well-graded GRAVEL with CLAY and SAND (or SILTY CLAY and SAND)
GP-GM	Poorly graded GRAVEL with SILT Poorly graded GRAVEL with SILT and SAND
GP-GC	Poorly graded GRAVEL with CLAY (or SILTY CLAY) Poorly graded GRAVEL with CLAY and SAND (or SILTY CLAY and SAND)
GM	SILTY GRAVEL SILTY GRAVEL with SAND
GC	CLAYEY GRAVEL CLAYEY GRAVEL with SAND
GC-GM	SILTY, CLAYEY GRAVEL SILTY, CLAYEY GRAVEL with SAND
SW	Well-graded SAND Well-graded SAND with GRAVEL
SP	Poorly graded SAND Poorly graded SAND with GRAVEL
SW-SM	Well-graded SAND with SILT Well-graded SAND with SILT and GRAVEL
SW-SC	Well-graded SAND with CLAY (or SILTY CLAY) Well-graded SAND with CLAY and GRAVEL (or SILTY CLAY and GRAVEL)
SP-SM	Poorly graded SAND with SILT Poorly graded SAND with SILT and GRAVEL
SP-SC	Poorly graded SAND with CLAY (or SILTY CLAY) Poorly graded SAND with CLAY and GRAVEL (or SILTY CLAY and GRAVEL)
SM	SILTY SAND SILTY SAND with GRAVEL
SC	CLAYEY SAND CLAYEY SAND with GRAVEL
SC-SM	SILTY, CLAYEY SAND SILTY, CLAYEY SAND with GRAVEL
PT	PEAT
	COBBLES COBBLES and BOULDERS BOULDERS

Graphic/Symbol	Group Names
CL	Lean CLAY Lean CLAY with SAND Lean CLAY with GRAVEL SANDY lean CLAY SANDY lean CLAY with GRAVEL GRAVELLY lean CLAY GRAVELLY lean CLAY with SAND
CL-ML	SILTY CLAY SILTY CLAY with SAND SILTY CLAY with GRAVEL SANDY SILTY CLAY SANDY SILTY CLAY with GRAVEL GRAVELLY SILTY CLAY GRAVELLY SILTY CLAY with SAND
ML	SILT SILT with SAND SILT with GRAVEL SANDY SILT SANDY SILT with GRAVEL GRAVELLY SILT GRAVELLY SILT with SAND
OL	ORGANIC lean CLAY ORGANIC lean CLAY with SAND ORGANIC lean CLAY with GRAVEL SANDY ORGANIC lean CLAY SANDY ORGANIC lean CLAY with GRAVEL GRAVELLY ORGANIC lean CLAY GRAVELLY ORGANIC lean CLAY with SAND
OL	ORGANIC SILT ORGANIC SILT with SAND ORGANIC SILT with GRAVEL SANDY ORGANIC SILT SANDY ORGANIC SILT with GRAVEL GRAVELLY ORGANIC SILT GRAVELLY ORGANIC SILT with SAND
CH	Fat CLAY Fat CLAY with SAND Fat CLAY with GRAVEL SANDY fat CLAY SANDY fat CLAY with GRAVEL GRAVELLY fat CLAY GRAVELLY fat CLAY with SAND
MH	Elastic SILT Elastic SILT with SAND Elastic SILT with GRAVEL SANDY elastic SILT SANDY elastic SILT with GRAVEL GRAVELLY elastic SILT GRAVELLY elastic SILT with SAND
OH	ORGANIC fat CLAY ORGANIC fat CLAY with SAND ORGANIC fat CLAY with GRAVEL SANDY ORGANIC fat CLAY SANDY ORGANIC fat CLAY with GRAVEL GRAVELLY ORGANIC fat CLAY GRAVELLY ORGANIC fat CLAY with SAND
OH	ORGANIC elastic SILT ORGANIC elastic SILT with SAND ORGANIC elastic SILT with GRAVEL SANDY ORGANIC elastic SILT SANDY ORGANIC elastic SILT with GRAVEL GRAVELLY ORGANIC elastic SILT GRAVELLY ORGANIC elastic SILT with SAND
OL/OH	ORGANIC SOIL ORGANIC SOIL with SAND ORGANIC SOIL with GRAVEL SANDY ORGANIC SOIL SANDY ORGANIC SOIL with GRAVEL GRAVELLY ORGANIC SOIL GRAVELLY ORGANIC SOIL with SAND

FIELD AND LABORATORY TESTING

- (C) Consolidation (ASTM D 2435)
- (CL) Collapse Potential (ASTM D 5333)
- (CP) Compaction Curve (CTM 216)
- (CR) Corrosivity Testing (CTM 643, CTM 422, CTM 417)
- (CU) Consolidated Undrained Triaxial (ASTM D 4767)
- (DS) Direct Shear (ASTM D 3080)
- (EI) Expansion Index (ASTM D 4829)
- (M) Moisture Content (ASTM D 2216)
- (OC) Organic Content-% (ASTM D 2974)
- (P) Permeability (CTM 220)
- (PA) Particle Size Analysis (ASTM D 422)
- (PI) Plasticity Index (AASHTO T 90) Liquid Limit (AASHTO T 89)
- (PL) Point Load Index (ASTM D 5731)
- (PM) Pressure Meter
- (PP) Pocket Penetrometer
- (R) R-Value (CTM 301)
- (SE) Sand Equivalent (CTM 217)
- (SG) Specific Gravity (AASHTO T 100)
- (SL) Shrinkage Limit (ASTM D 427)
- (SW) Swell Potential (ASTM D 4546)
- (TV) Pocket Torvane
- (UC) Unconfined Compression-Soil (ASTM D 2166) Unconfined Compression-Rock (ASTM D 2938)
- (UU) Unconsolidated Undrained Triaxial (ASTM D 2850)
- (UW) Unit Weight (ASTM D 4767)
- (VS) Vane Shear (AASHTO T 223)

DIST	COUNTY	ROUTE	POST MILES TOTAL PROJECT	SHEET No	TOTAL SHEETS
12	Ora	22,405, 605	R0.3/R0.9, 22.3/24.0,3.0/R1.6	1841	1929

07/27/09
REGISTERED CIVIL ENGINEER DATE

2-1-10
PLANS APPROVAL DATE

REGISTERED PROFESSIONAL ENGINEER K.Arulmoli No. GE 2090 Exp.12-31-09 GEOTECHNICAL STATE OF CALIFORNIA

The State of California or its officers or agents shall not be responsible for the accuracy or completeness of electronic copies of this plan sheet.

OCTA
550 SOUTH MAIN STREET
ORANGE, CA 92863

EARTH MECHANICS, INC.
17660, NEWHOPE STREET, SUITE E
FOUNTAIN VALLEY, CA 92708

APPARENT DENSITY OF COHESIONLESS SOILS

Description	SPT N_{60} (Blows / 12 inches)
Very loose	0 - 4
Loose	5 - 10
Medium Dense	11 - 30
Dense	31 - 50
Very Dense	> 50

MOISTURE

Description	Criteria
Dry	Absence of moisture, dusty, dry to the touch
Moist	Damp but no visible water
Wet	Visible free water, usually soil is below water table

PERCENT OR PROPORTION OF SOILS

Description	Criteria
Trace	Particles are present but estimated to be less than 5%
Few	5 to 10%
Little	15 to 25%
Some	30 to 45%
Mostly	50 to 100%

PARTICLE SIZE

Description		Size
Boulder		> 12"
Cobble		3" to 12"
Gravel	Coarse	3/4" to 3"
	Fine	No. 4 to 3/4"
Sand	Coarse	No. 10 to No. 4
	Medium	No. 40 to No. 10
	Fine	No. 200 to No. 40

Sudhakar Vatti
DESIGN OVERSIGHT Sudhakar Vatti
8-10-09
SIGN OFF DATE

DRAWN BY: J.Fang
CHECKED BY: G.J.Gunaranjan

FIELD INVESTIGATION BY:
R.Jie

PREPARED FOR THE STATE OF CALIFORNIA DEPARTMENT OF TRANSPORTATION

K.Arulmoli
PROJECT ENGINEER

BRIDGE NO. 55E0103
POST MILE R0.5

SOUND WALL NO 445
LOG OF TEST BORINGS NO. 2

OSF CIVIL LOG OF TEST BORINGS SHEET (ENGLISH) (REV. 2-25-05)

ORIGINAL SCALE IN INCHES FOR REDUCED PLANS 0 1 2 3

CU 12235
EA 071631

DISREGARD PRINTS BEARING EARLIER REVISION DATES

REVISION DATES (PRELIMINARY STAGE ONLY) 03/25/09 04/06/09 07/27/09

SHEET 21 OF 24

FILE => 55-e0103-z-ltb02.dgn

USERNAME => trimmguye DATE PLOTTED => 04-FEB-2010 TIME PLOTTED => 10:15

DIST	COUNTY	ROUTE	POST MILES TOTAL PROJECT	SHEET No	TOTAL SHEETS
12	Ora	22,405, 605	R0.3/R0.9, 22.3/24.0,3.0/R1.6	1842	1929

REGISTERED CIVIL ENGINEER 07/27/09 DATE

2-1-10
PLANS APPROVAL DATE

REGISTERED PROFESSIONAL ENGINEER K.Arulmoli No. GE 2090 Exp.12-31-09 GEOTECHNICAL STATE OF CALIFORNIA

The State of California or its officers or agents shall not be responsible for the accuracy or completeness of electronic copies of this plan sheet.

OCTA
550 SOUTH MAIN STREET
ORANGE, CA 92863

EARTH MECHANICS, INC.
17660, NEWHOPE STREET, SUITE E
FOUNTAIN VALLEY, CA 92708

BENCHMARKS:

Monument: 1A-144-04

Described by OCS 2005 - Found 3.75" OCS aluminum benchmark disk stamped "1A-144-04", set in the southwesterly corner of a 4.4 ft by 4.4 ft concrete catch basin. Monument is located in the northeasterly corner of the intersection of Seal Beach Boulevard and St. Cloud Drive, 44 ft easterly of the centerline of Seal Beach Boulevard and 58 ft northerly of the centerline of St. Cloud Dr. Monument is set level with the sidewalk.

Elevation: 15.37 feet

NOTES:

(1) This LOTB sheet (Boring Record) was prepared in accordance with the Caltrans Soil and Rock Classification Logging, Classification and Presentation Manual (June 2007).

(2) 2.4" samples were taken using a California Modified Sampler.

(3) An automatic trip hammer system consisting of a hammer weight of 140 lbs falling a distance of 30" was used to advance the drive sampler.

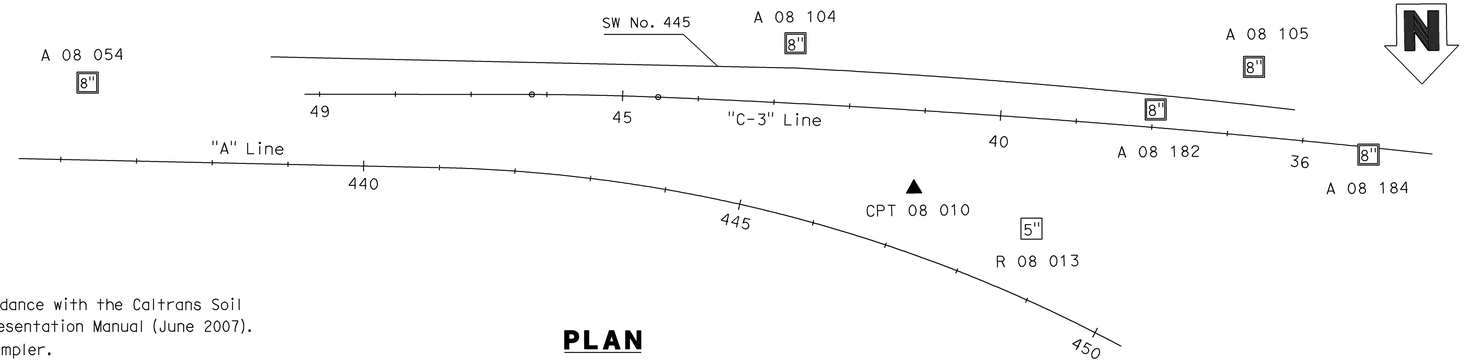

PLAN

1" = 100'

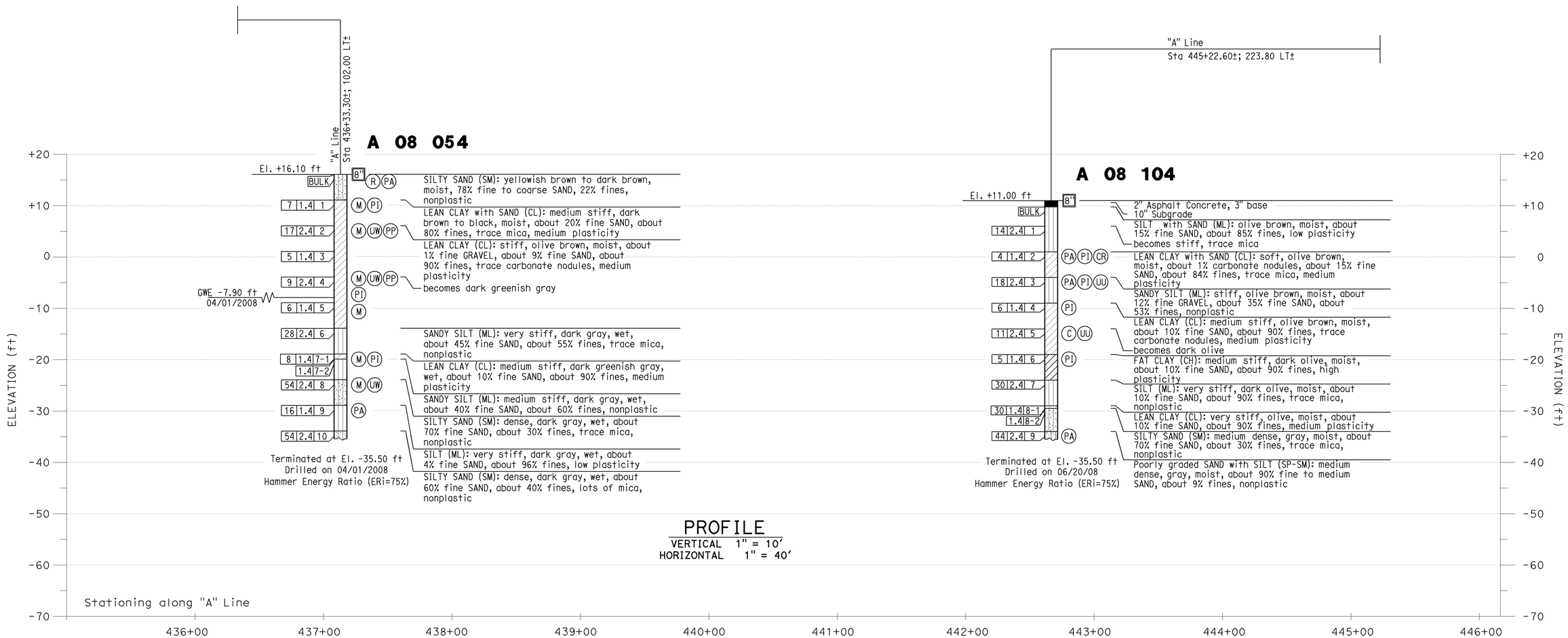

PROFILE

VERTICAL 1" = 10'
HORIZONTAL 1" = 40'

Sudhakar Vatti DESIGN OVERSIGHT Sudhakar Vatti 8-10-09 SIGN OFF DATE	DRAWN BY: J.Fang CHECKED BY: G.J.Gunaranjan	FIELD INVESTIGATION BY: R.Jie	PREPARED FOR THE STATE OF CALIFORNIA DEPARTMENT OF TRANSPORTATION	K.Arulmoli PROJECT ENGINEER	BRIDGE NO. 55E0103 POST MILE R0.5	SOUND WALL NO 445 LOG OF TEST BORINGS NO. 3

OSF CIVIL LOG OF TEST BORINGS SHEET (ENGLISH) (REV. 2-25-05)

ORIGINAL SCALE IN INCHES FOR REDUCED PLANS 0 1 2 3

CU 12235
EA 071631

DISREGARD PRINTS BEARING EARLIER REVISION DATES

REVISION DATES (PRELIMINARY STAGE ONLY) 03/23/09 04/06/09 07/21/09

SHEET 22 OF 24

FILE => 55-e0103-z-lltb03.dgn

USERNAME => rtrmnguye DATE PLOTTED => 04-FEB-2010 TIME PLOTTED => 10:15

DIST	COUNTY	ROUTE	POST MILES TOTAL PROJECT	SHEET No	TOTAL SHEETS
12	Ora	22,405, 605	R0.3/R0.9, 22.3/24.0,3.0/R1.6	1843	1929

REGISTERED CIVIL ENGINEER 07/27/09 DATE

2-1-10
PLANS APPROVAL DATE

REGISTERED PROFESSIONAL ENGINEER K.Arulmoli No. GE 2090 Exp.12-31-09 GEOTECHNICAL STATE OF CALIFORNIA

The State of California or its officers or agents shall not be responsible for the accuracy or completeness of electronic copies of this plan sheet.

OCTA
550 SOUTH MAIN STREET
ORANGE, CA 92863

EARTH MECHANICS, INC.
17660, NEWHOPE STREET, SUITE E
FOUNTAIN VALLEY, CA 92708

BENCHMARKS:
Monument: 1A-144-04
Described by OCS 2005 - Found 3.75" OCS aluminum benchmark disk stamped "1A-144-04", set in the southwesterly corner of a 4.4 ft by 4.4 ft concrete catch basin. Monument is located in the northeasterly corner of the intersection of Seal Beach Boulevard and St. Cloud Drive, 44 ft easterly of the centerline of Seal Beach Boulevard and 58 ft northerly of the centerline of St. Cloud Dr. Monument is set level with the sidewalk.
Elevation: 15.37 feet

NOTES:
(1) This LOTB sheet (Boring Record) was prepared in accordance with the Caltrans Soil and Rock Classification Logging, Classification and Presentation Manual (June 2007).
(2) 2.4" samples were taken using a California Modified Sampler.
(3) A rope and cat-head hammer system consisting of a hammer weight of 140 lbs falling a distance of 30" was used to advance the drive sampler.

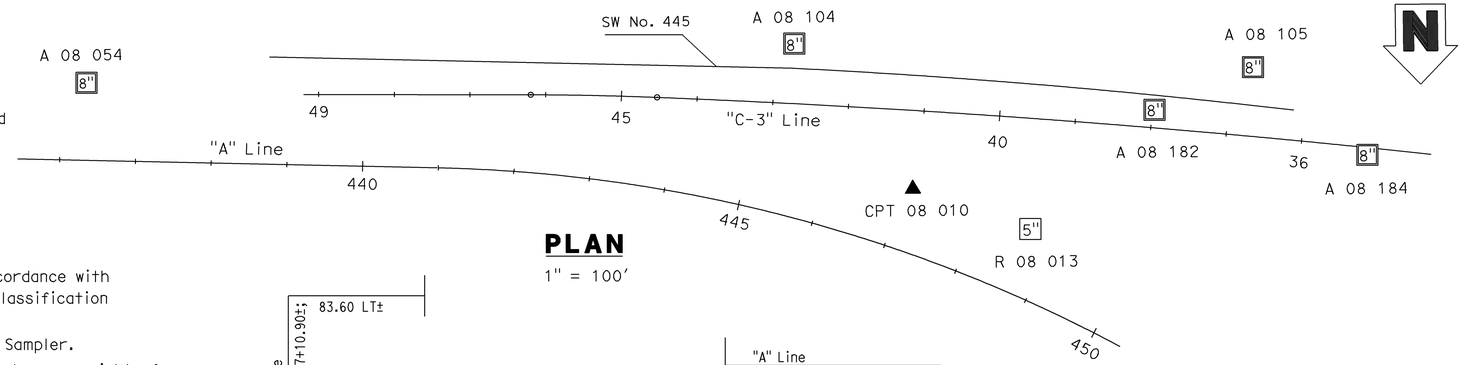

PLAN
1" = 100'

CPT 08 010

"A" Line STA 447+10.90±; 83.60 LT±

El. +19.90ft

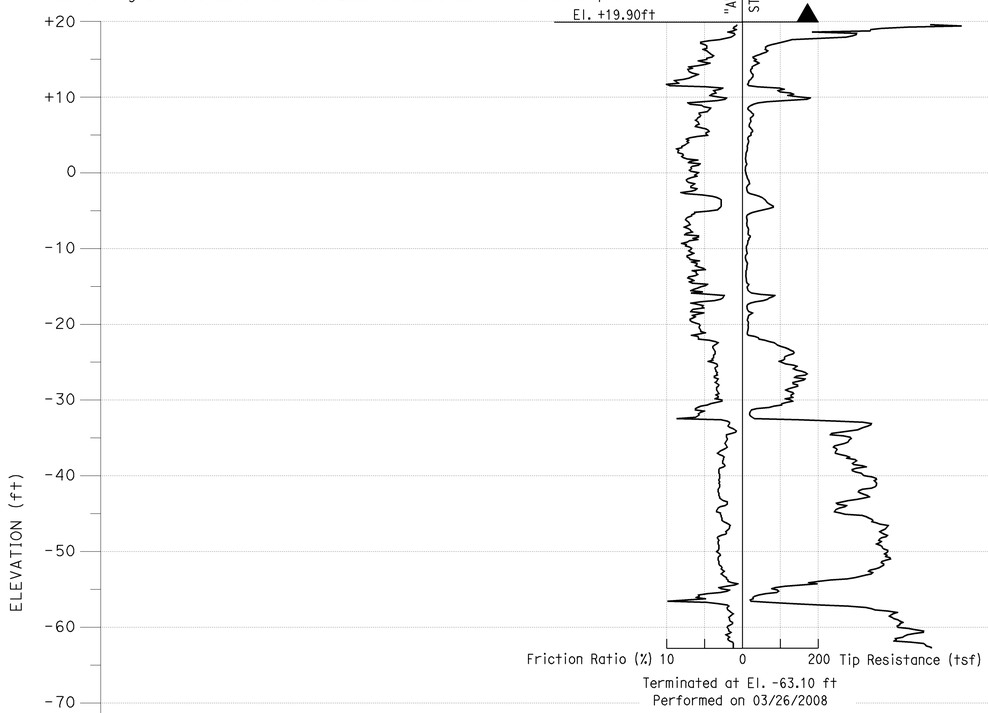

Terminated at El. -63.10 ft
Performed on 03/26/2008

R 08 013

"A" Line STA 448+69.70±; 88.70 LT±

El. +20.40 ft

GWE -2.60 ft 04/23/2008

Blows	Wn	Sample	Description
BULK			5" Poorly graded SAND with SILT (SP-SM): yellowish brown, moist, mostly fine to medium SAND, few fines nonplastic
23	1.4	1	(M)(PA)(PI) SANDY LEAN CLAY (CL): very stiff, dark brown, moist, 3% GRAVEL, 30% fine SAND, 67% fines, medium plasticity
25	2.4	2	(M)(UW)(PI) LEAN CLAY with SAND (CL): very stiff, dark brown, moist, about 20% fine SAND, about 80% fines, low plasticity
10	1.4	3	(PP)(EI)(M) becomes stiff, medium plasticity
14	2.4	4	(M)(UW)(PI)(P)(C) SILT with SAND (ML): stiff, brown, moist, about 3% carbonate nodules, about 12% fine SAND, about 85% fines, nonplastic
6	1.4	5-1	SANDY SILT (ML): medium stiff, brown, moist, about 30% fine to coarse SAND, about 70% fines, low plasticity
	1.4	5-2	(CR)
17	2.4	6	(M)(UW)(UU) LEAN CLAY with SAND (CL): medium stiff, brown, moist, about 15% fine SAND, about 85% fines, medium plasticity
12	1.4	7	LEAN CLAY (CL): stiff, olive brown, moist, about 10% fine SAND, about 90% fines, medium plasticity
40	2.4	8	(M)(UW)(PP) SILT with SAND (ML): stiff, olive brown, very moist, about 25% fine SAND, about 75% fines, trace mica, low plasticity
30	1.4	9	(M)(PA) LEAN CLAY with SAND (CL): very stiff, olive brown to olive gray, moist, about 15% SAND, about 85% fines, low to medium plasticity, some SILT (ML) at bottom
50/5.5"	2.4	10	(M)(UW)(PP) SANDY SILT (ML): hard, olive gray to olive brown, moist, 40% fine SAND, 60% fines, trace mica, nonplastic
50	1.4	11-1	SILT (ML): hard, dark greenish gray, moist, about 10% fine SAND, about 90% fines, trace mica, nonplastic
	1.4	11-2	(M)(PI) Poorly graded SAND with SILT (SP-SM): dense, gray, moist, about 90% medium to fine SAND, about 10% fines, trace mica, nonplastic
REF	2.4	12	SILT with SAND (ML): hard, dark gray, moist, about 15% fine SAND, about 85% fines, trace mica, low plasticity
67	1.4	13	(M)(PA) Poorly graded SAND (SP): very dense, gray, moist, about 96% fine to medium SAND, about 4% fines, trace mica, nonplastic
REF	2.4	14	(M)(UW) SILTY SAND (SM): very dense, gray, moist, 3% fine GRAVEL, 79% coarse to fine SAND, 18% fines, trace mica, nonplastic
50/5.5"	1.4	15	Poorly graded SAND with SILT (SP-SM): very dense, gray, moist, about 92% medium to fine SAND, 8% fines, nonplastic
57	2.4	16-1	(M)(UW)(PI) Poorly graded SAND with GRAVEL (SP): dense, gray, moist, about 15% fine GRAVEL, about 81% coarse to fine SAND, about 4% fines, nonplastic
REF	2.4	16-2	(PP)
50/4"	1.4	17	ELASTC SILT with SAND (MH): hard, dark gray, moist, about 15% fine SAND, about 85% fines, trace mica, medium plasticity
50/5"	2.4	18	(M)(UW)(PI) SILTY SAND (SM): very dense, dark gray, moist, about 80% medium to fine SAND, about 20% fines, trace mica, nonplastic
REF	1.4	19	(PP) SILT with SAND (ML): hard, dark greenish gray, moist, about 15% fine SAND, about 85% fines, trace mica, trace wood, nonplastic
REF	2.4	20	SILTY SAND (SM): very dense, dark gray, moist, about 80% fine SAND, about 20% fines, trace mica, nonplastic
			Poorly graded SAND with SILT (SP-SM): very dense, gray, moist, about 92% medium to fine SAND, about 8% fines, nonplastic
REF	1.4	21	(M)(PA) SILTY SAND (SM): very dense, gray, moist, 57% medium to fine SAND, 43% fines, trace mica, nonplastic
REF	1.4	22	(M) Pocket of CLAYEY SILT at top

Terminated at El. -100.10 ft
Drilled on 04/23/2008
Hammer Energy Ratio (ERi=57%)

PROFILE
VERTICAL 1" = 10'
HORIZONTAL 1" = 40'

Stationing along "A" Line

444+00 445+00 446+00 447+00 448+00 449+00 450+00 451+00 452+00 453+00

Sudhakar Vatti
DESIGN OVERSIGHT Sudhakar Vatti
8-10-09
SIGN OFF DATE

DRAWN BY: J.Fang
CHECKED BY: G.J.Gunaranjan

FIELD INVESTIGATION BY:
R.Jie

PREPARED FOR THE STATE OF CALIFORNIA DEPARTMENT OF TRANSPORTATION

K.Arulmoli
PROJECT ENGINEER

BRIDGE NO. 55E0103
POST MILE R0.5

SOUND WALL NO 445
LOG OF TEST BORINGS NO. 4

CU 12235
EA 071631

DISREGARD PRINTS BEARING EARLIER REVISION DATES
REVISION DATES (PRELIMINARY STAGE ONLY) 03/25/09 04/06/09 07/27/09

SHEET 23 OF 24

OSF CIVIL LOG OF TEST BORINGS SHEET (ENGLISH) (REV. 2-25-05)

ORIGINAL SCALE IN INCHES FOR REDUCED PLANS 0 1 2 3

FILE => 55-e0103-z-ltb04.dgn

USERNAME => trmnguye DATE PLOTTED => 04-FEB-2010 TIME PLOTTED => 10:16

DIST	COUNTY	ROUTE	POST MILES TOTAL PROJECT	SHEET No	TOTAL SHEETS
12	Ora	22,405, 605	R0.3/R0.9, 22.3/24.0,3.0/R1.6	1844	1929

REGISTERED CIVIL ENGINEER 07/27/09 DATE

2-1-10
PLANS APPROVAL DATE

REGISTERED PROFESSIONAL ENGINEER K.Arulmoli No. GE 2090 Exp.12-31-09 GEOTECHNICAL STATE OF CALIFORNIA

The State of California or its officers or agents shall not be responsible for the accuracy or completeness of electronic copies of this plan sheet.

OCTA
550 SOUTH MAIN STREET
ORANGE, CA 92863

EARTH MECHANICS, INC.
17660, NEWHOPE STREET, SUITE E
FOUNTAIN VALLEY, CA 92708

BENCHMARKS:

Monument: 1A-144-04

Described by OCS 2005 - Found 3.75" OCS aluminum benchmark disk stamped "1A-144-04", set in the southwesterly corner of a 4.4 ft by 4.4 ft concrete catch basin. Monument is located in the northeasterly corner of the intersection of Seal Beach Boulevard and St. Cloud Drive, 44 ft easterly of the centerline of Seal Beach Boulevard and 58 ft northerly of the centerline of St. Cloud Dr. Monument is set level with the sidewalk.

Elevation: 15.37 feet

NOTES:

(1) This LOTB sheet (Boring Record) was prepared in accordance with the Caltrans Soil and Rock Classification Logging, Classification and Presentation Manual (June 2007).

(2) 2.4" samples were taken using a California Modified Sampler.

(3) An automatic trip hammer system consisting of a hammer weight of 140 lbs falling a distance of 30" was used to advance the drive sampler.

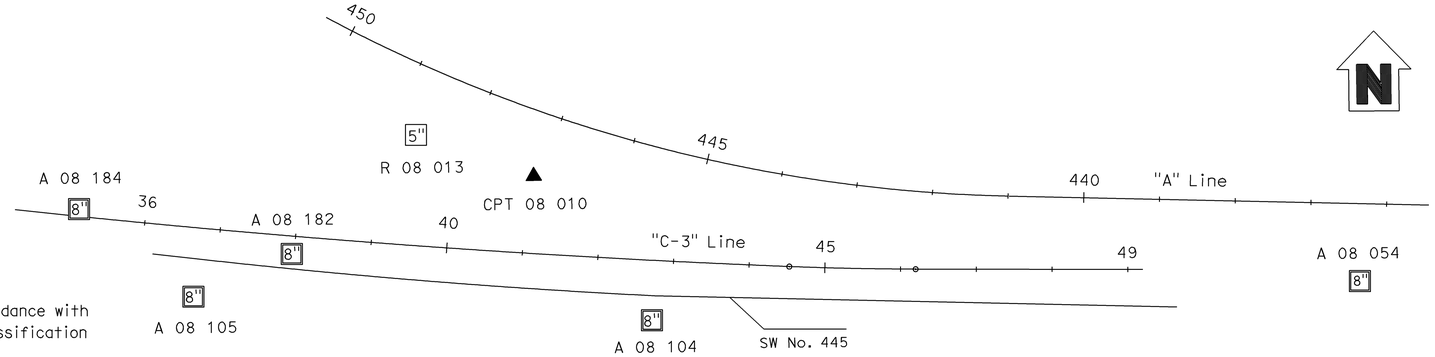

PLAN

1" = 100'

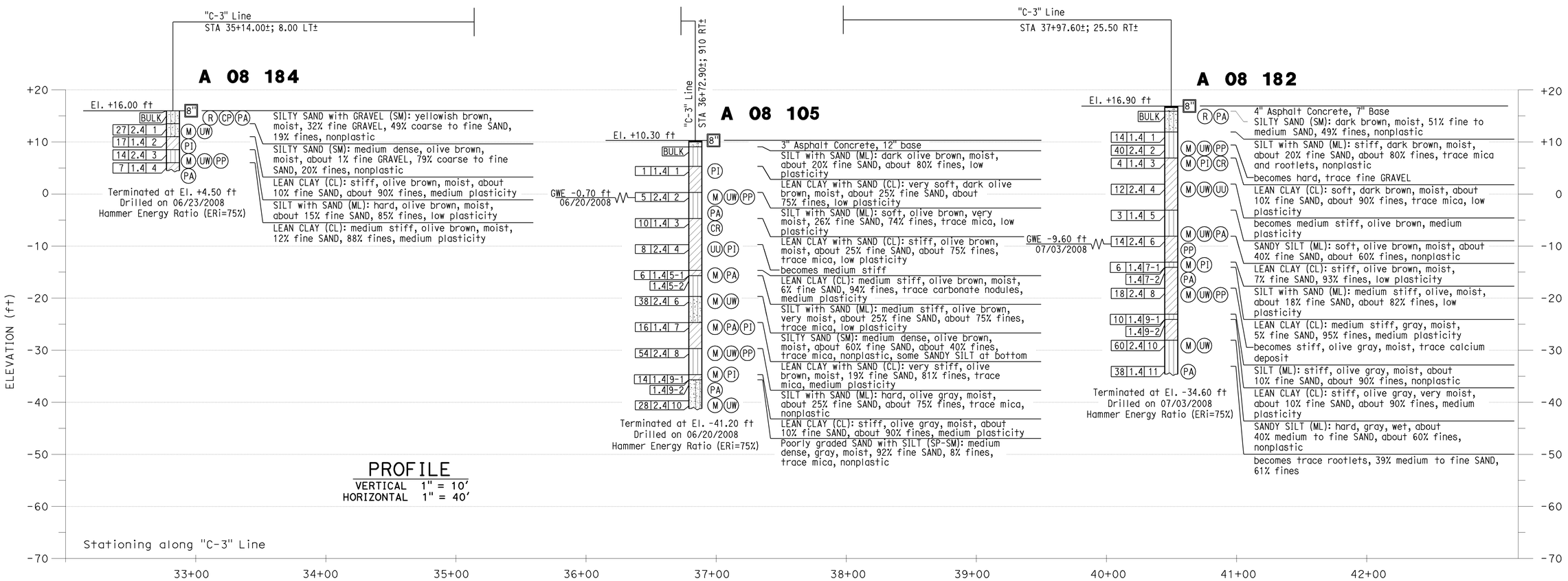

Sudhakar Vatti
DESIGN OVERSIGHT Sudhakar Vatti
8-10-09
SIGN OFF DATE

DRAWN BY: J.Fang
CHECKED BY: G.J.Gunaranjan

FIELD INVESTIGATION BY:
R.Jie

PREPARED FOR THE STATE OF CALIFORNIA DEPARTMENT OF TRANSPORTATION

K.Arulmoli
PROJECT ENGINEER

BRIDGE NO. 55E0103
POST MILE R0.5

SOUND WALL NO 445
LOG OF TEST BORINGS NO. 5

OSF CIVIL LOG OF TEST BORINGS SHEET (ENGLISH) (REV. 2-25-05)

ORIGINAL SCALE IN INCHES FOR REDUCED PLANS 0 1 2 3

CU 12235
EA 071631

DISREGARD PRINTS BEARING EARLIER REVISION DATES

REVISION DATES (PRELIMINARY STAGE ONLY) 03/23/09 04/06/09 07/27/09

SHEET 24 OF 24

FILE => 55-e0103-z-ltb05.dgn

USERNAME => trmnguye DATE PLOTTED => 04-FEB-2010 TIME PLOTTED => 10:16

DIST	COUNTY	ROUTE	POST MILES TOTAL PROJECT	SHEET No	TOTAL SHEETS
12	Ora	22, 405, 605	R0.3/R0.9, 22.3/24.0,3.0/R1.6	1845	1929

REGISTERED CIVIL ENGINEER 07-27-09 DATE

2-1-10
PLANS APPROVAL DATE

REGISTERED PROFESSIONAL ENGINEER A. Priley No. C 73375 Exp. 12-31-10 CIVIL STATE OF CALIFORNIA

The State of California or its officers or agents shall not be responsible for the accuracy or completeness of electronic copies of this plan sheet.

OCTA
550 SOUTH MAIN STREET
ORANGE, CA 92863

TRC
21 TECHNOLOGY DR
IRVINE, CA 92618

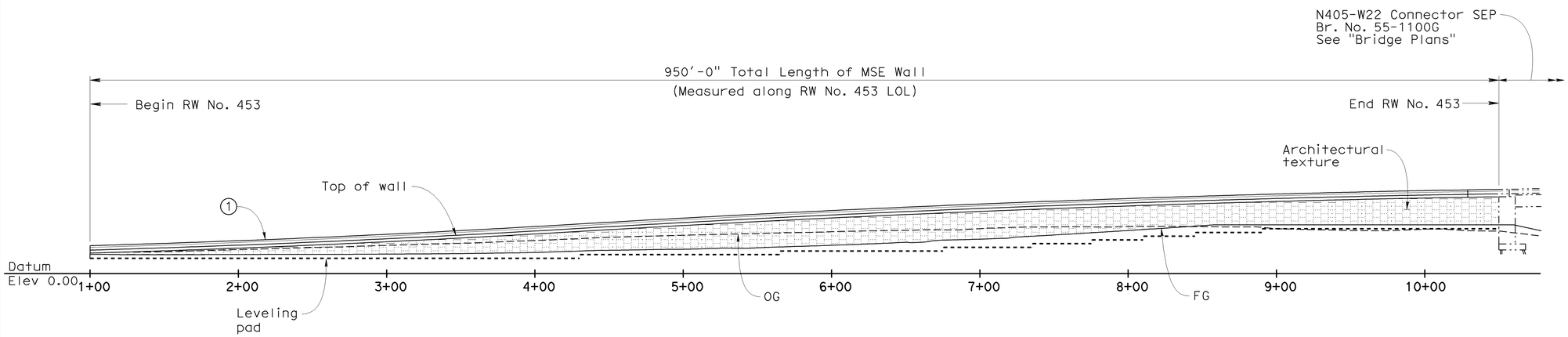

DEVELOPED ELEVATION

1" = 40'

LEGEND

1 Concrete Barrier (Type 736 Mod)

3 Structure Approach Slab, see "Bridge Plans"

NOTES

1. For Typical Sections, see "General Plan No. 2" sheet

CURVE DATA

NO.	R	Δ	T	L
A	5008.50'	00°18'56"	13.80'	27.59'
B	2206.50'	18°29'49"	359.29'	712.33'

RETAINING WALL NO 453 BR NO 55E0104

QUANTITIES

EARTH RETAINING STRUCTURE, LOCATION 5	17,250	SQFT
STRUCTURAL CONCRETE, BARRIER SLAB	440	CY
CONCRETE BARRIER (TYPE 736 MODIFIED)	929	LF

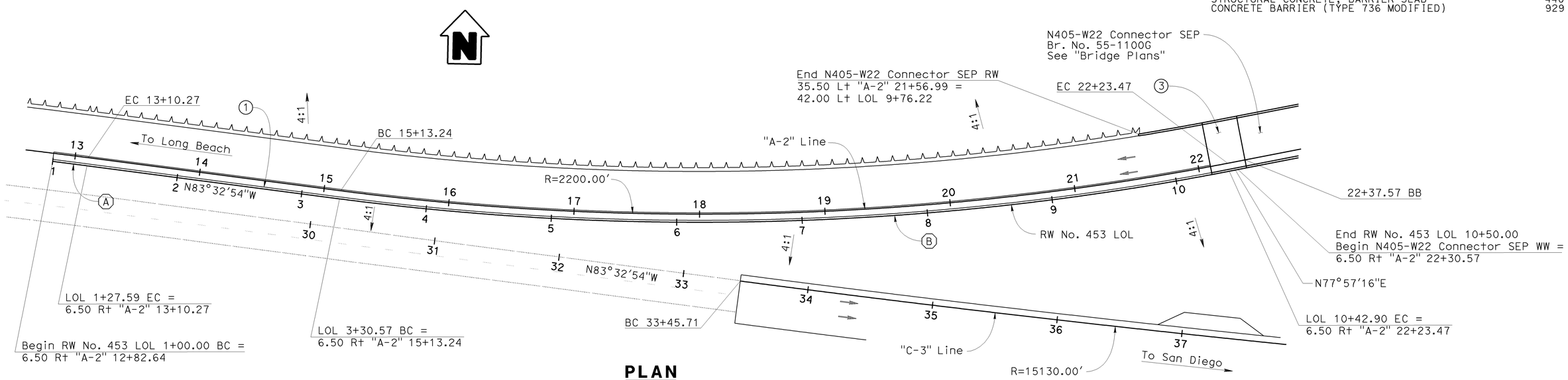

PLAN

1" = 40'

Sudhakar Vatti
DESIGN OVERSIGHT Sudhakar Vatti
8-10-09
SIGN OFF DATE

	BY	CHECKED			
DESIGN	A. Priley	K. Michalski	LOAD FACTOR DESIGN (LFD)	LIVE LOADING: HS20-44 AND ALTERNATIVE AND PERMIT DESIGN LOAD	
DETAILS	A. Priley	J. Hermstad	LAYOUT	K. Michalski	A. Priley
QUANTITIES	A. Priley	J. Wong	SPECIFICATIONS	EL Tyk	PLANS AND SPECS COMPARED J. Hermstad

PREPARED FOR THE STATE OF CALIFORNIA DEPARTMENT OF TRANSPORTATION

A. Priley
PROJECT ENGINEER

BRIDGE NO. 55E0104
POST MILES R0.6

RETAINING WALL NO. 453
GENERAL PLAN NO. 1

DESIGN GENERAL PLAN SHEET (ENGLISH) (REV.2/25/05)

ORIGINAL SCALE IN INCHES FOR REDUCED PLANS 0 1 2 3

CU 12235
EA 071631

DISREGARD PRINTS BEARING EARLIER REVISION DATES

REVISION DATES (PRELIMINARY STAGE ONLY) 10/16/08 04/06/09 01/27/09

SHEET 1 OF 22

FILE => 55-e0104-a-gp01.dgn

USERNAME => trmnguye DATE PLOTTED => 04-FEB-2010 TIME PLOTTED => 10:16

DIST	COUNTY	ROUTE	POST MILES TOTAL PROJECT	SHEET No	TOTAL SHEETS
12	Ora	22, 405, 605	R0.3/R0.9, 22.3/24.0,3.0/R1.6	1846	1929

REGISTERED CIVIL ENGINEER 07-27-09 DATE

2-1-10
PLANS APPROVAL DATE

REGISTERED PROFESSIONAL ENGINEER A. Priley No. C 73375 Exp. 12-31-10 CIVIL STATE OF CALIFORNIA

The State of California or its officers or agents shall not be responsible for the accuracy or completeness of electronic copies of this plan sheet.

OCTA
550 SOUTH MAIN STREET
ORANGE, CA 92863

TRC
21 TECHNOLOGY DR
IRVINE, CA 92618

LEGEND

1. Concrete Barrier (Type 736 Mod)
2. Roadway Section, see "Road Plans"
3. Structure Approach Slab, see "Bridge Plans"
4. Precast Concrete Panels with Architectural Texture

NOTES

1. For Plan and Elevation, see "General Plan No. 1" sheet

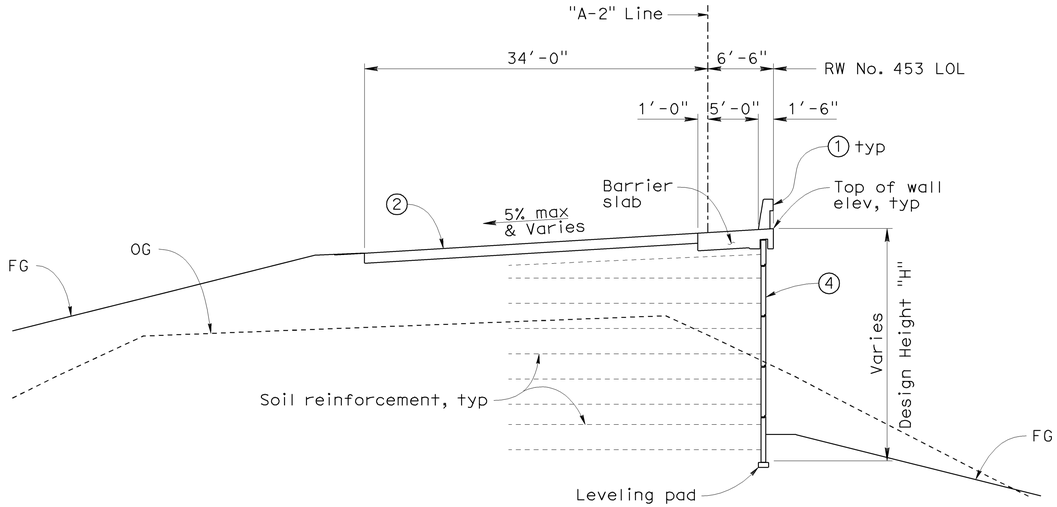

LOL STA 1+0.00 TO 9+76.22

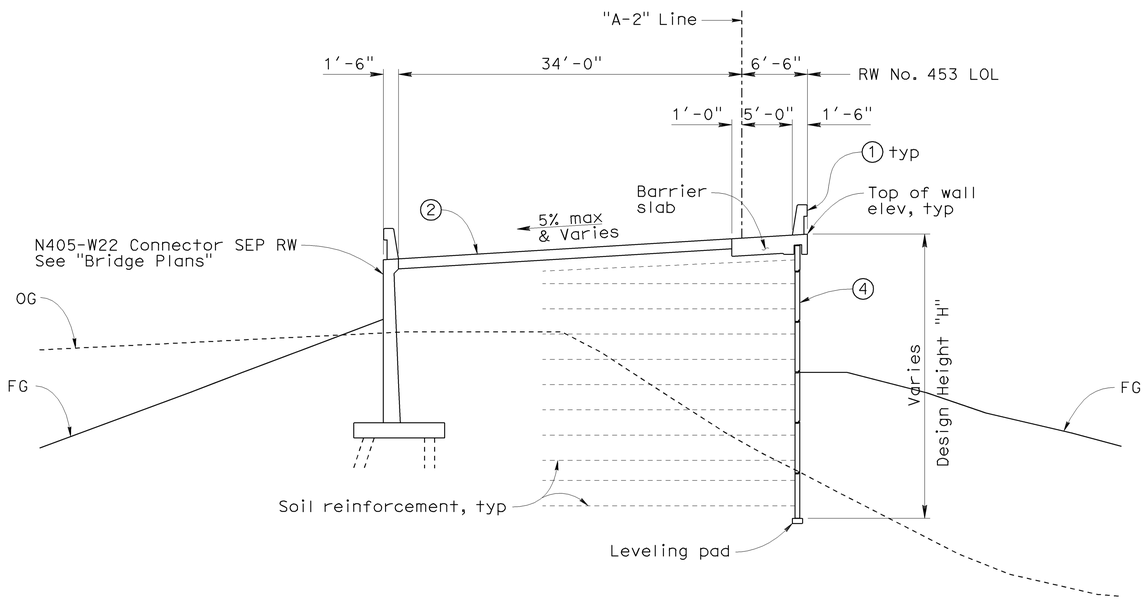

LOL STA 9+76.22 TO 10+29.00

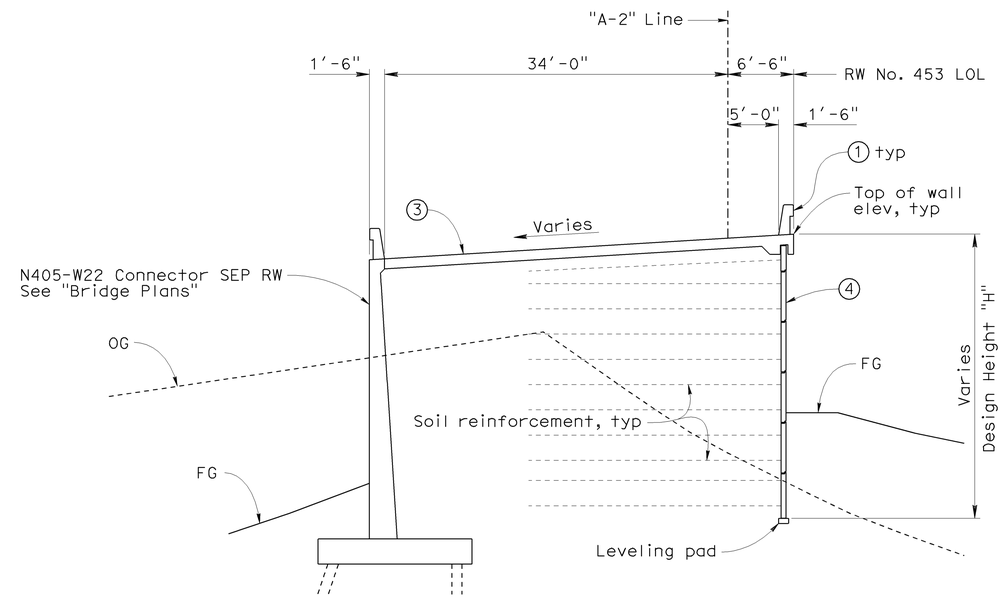

LOL STA 10+29.00 TO 10+50.00

TYPICAL SECTIONS

No Scale

Sudhakar Vatti — DESIGN OVERSIGHT Sudhakar Vatti; 8-10-09 SIGN OFF DATE	DESIGN	BY A. Priley	CHECKED K. Michalski	LOAD FACTOR DESIGN (LFD)	LIVE LOADING: HS20-44 AND ALTERNATIVE AND PERMIT DESIGN LOAD	
	DETAILS	BY A. Priley	CHECKED J. Hermstad	LAYOUT	BY K. Michalski	CHECKED A. Priley
	QUANTITIES	BY A. Priley	CHECKED J. Wong	SPECIFICATIONS	BY EL Tyk	PLANS AND SPECS COMPARED J. Hermstad

PREPARED FOR THE STATE OF CALIFORNIA DEPARTMENT OF TRANSPORTATION

A. Priley
PROJECT ENGINEER

BRIDGE NO. 55E0104
POST MILES R0.6

RETAINING WALL NO. 453
GENERAL PLAN NO. 2

DESIGN GENERAL PLAN SHEET (ENGLISH) (REV.2/25/05)

ORIGINAL SCALE IN INCHES FOR REDUCED PLANS 0 1 2 3

CU 12235
EA 071631

DISREGARD PRINTS BEARING EARLIER REVISION DATES

REVISION DATES (PRELIMINARY STAGE ONLY) 10/16/08 04/06/09 07/27/09

SHEET 2 OF 22

FILE => 55-e0104-a-gp02.dgn

USERNAME => trmnguye DATE PLOTTED => 04-FEB-2010 TIME PLOTTED => 10:16

DIST	COUNTY	ROUTE	POST MILES TOTAL PROJECT	SHEET No	TOTAL SHEETS
12	Ora	22,405, 605	R0.3/R0.9, 22.3/24.0,3.0/R1.6	1847	1929

REGISTERED CIVIL ENGINEER 07-27-09 DATE

2-1-10
PLANS APPROVAL DATE

The State of California or its officers or agents shall not be responsible for the accuracy or completeness of electronic copies of this plan sheet.

REGISTERED PROFESSIONAL ENGINEER A. Priley No. C 73375 Exp. 12-31-10 CIVIL STATE OF CALIFORNIA

OCTA
550 SOUTH MAIN STREET
ORANGE, CA 92863

TRC
21 TECHNOLOGY DR
IRVINE, CA 92618

STANDARD PLANS DATED MAY 2006

A10A	Acronyms and Abbreviations (Sheet 1 of 2)
A10B	Acronyms and Abbreviations (Sheet 2 of 2)
A10C	Symbols (Sheet 1 of 2)
A10D	Symbols (Sheet 2 of 2)
A62B	Limits of Excavation and Backfill - Bridge Surcharge and Wall
A74	Survey Monuments
D102	Underdrains
B11-56	Concrete Barrier Type 736
P1	Jointed Plain Concrete Pavement
P10	Concrete Pavement - Dowel Bar Details

Standard Plan Sheet No.

Detail No.

GENERAL NOTES (MSE)

Live loading: Surcharge = 240 lb/ft^2

Soil parameters:

Internal design ϕ = 34°, γ = 120 lb/ft^3

External design ϕ(Backfill) = 34°, γ = 120 lb/ft^3

ϕ(Foundation) = 30°

Precast concrete panels:

f'c = 4,000 psi (Concrete compressive strength at 28 days)

fy = 60,000 psi (Yield strength of reinforcement)

Soil reinforcement:

Welded wire mats: fy = 65,000 psi (Yield strength)

Coupler: fy = 36,000 psi (Yield strength)

Corrosion rate = 1.1 mils/year

Reinforced concrete:

f'c = 3,600 psi, except as noted

(Concrete compressive strength at 28 days)

fy = 60,000 psi (Yield strength of reinforcement)

MSE = Mechanically stabilized embankment

INDEX TO PLANS

SHEET NO.	TITLE
1	General Plan No. 1
2	General Plan No. 2
3	Index to Plans
4	Structure Plan No. 1
5	Structure Plan No. 2
6	Structure Plan No. 3
7	Structure Plan No. 4
8	Structure Plan No. 5
9	Panel Details No. 1
10	Panel Details No. 2
11	Wall Details No. 1
12	Wall Details No. 2
13	Architectural Panel Layout No. 1
14	Architectural Panel Layout No. 2
15	Architectural Details No. 1
16	Architectural Details No. 2
17	Architectural Details No. 3
18	Log of Test Borings No. 1
19	Log of Test Borings No. 2
20	Log of Test Borings No. 3
21	Log of Test Borings No. 4
22	Log of Test Borings No. 5 (As-Built)

LEGEND

Limits of structure excavation

Limits of structure backfill

Limits of permeable material

NOTES

1. Limits to FS except to GP when in roadway section
2. Locate 8" perforated underdrain below bottom level of welded wire mats
3. Maximum spacing of outlet pipes is 200 ft
4. At sags in profile of underdrain, install outlet pipe for each direction of flow

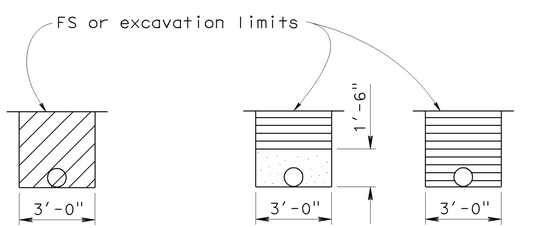

EXCAVATION

OUTLET PIPE

CLEANOUT PIPE

BACKFILL

OUTLET OR CLEANOUT PIPE FOR UNDERDRAIN

No Scale

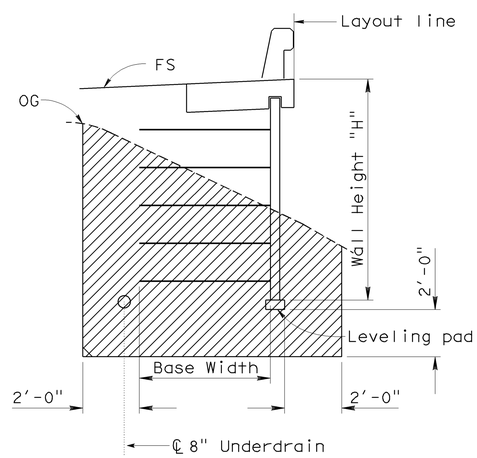

LIMITS OF EXCAVATION

No Scale

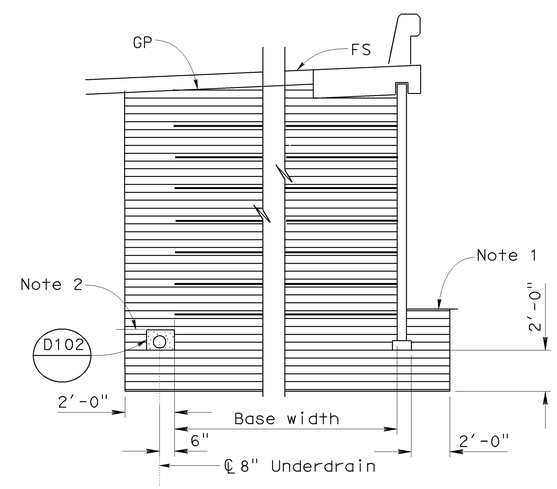

ROADWAY SECTION WITH BASE WIDTH 16' OR GREATER

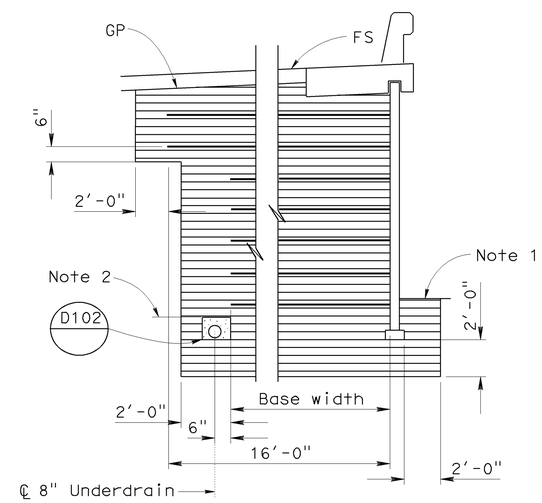

ROADWAY SECTION WITH BASE WIDTH LESS THAN 16'

LIMITS OF BACKFILL

No Scale

Sudhakar Vatti
DESIGN OVERSIGHT Sudhakar Vatti

8-10-09
SIGN OFF DATE

	BY	CHECKED
DESIGN	A. Priley	K. Michalski
DETAILS	A. Priley	J. Hermstad
QUANTITIES	A. Priley	J. Wong

PREPARED FOR THE STATE OF CALIFORNIA DEPARTMENT OF TRANSPORTATION

A. Priley
PROJECT ENGINEER

BRIDGE NO. 55E0104
POST MILE R0.6

RETAINING WALL NO. 453
INDEX TO PLANS

DESIGN DETAIL SHEET (ENGLISH) (REV. 2/25/05)

ORIGINAL SCALE IN INCHES FOR REDUCED PLANS 0 1 2 3

CU 12235
EA 071631

DISREGARD PRINTS BEARING EARLIER REVISION DATES

REVISION DATES (PRELIMINARY STAGE ONLY) 04/06/09 07/27/09

SHEET 3 OF 22

FILE => 55-e0104-a-itp.dgn

USERNAME => trmnguye DATE PLOTTED => 04-FEB-2010 TIME PLOTTED => 10:16

DIST	COUNTY	ROUTE	POST MILES TOTAL PROJECT	SHEET No	TOTAL SHEETS
12	Ora	22,405, 605	R0.3/R0.9, 22.3/24.0,3.0/R1.6	1848	1929

REGISTERED CIVIL ENGINEER 07-27-09 DATE

2-1-10
PLANS APPROVAL DATE

REGISTERED PROFESSIONAL ENGINEER A. Priley No. C 73375 Exp. 12-31-10 CIVIL STATE OF CALIFORNIA

The State of California or its officers or agents shall not be responsible for the accuracy or completeness of electronic copies of this plan sheet.

OCTA
550 SOUTH MAIN STREET
ORANGE, CA 92863

TRC
21 TECHNOLOGY DR
IRVINE, CA 92618

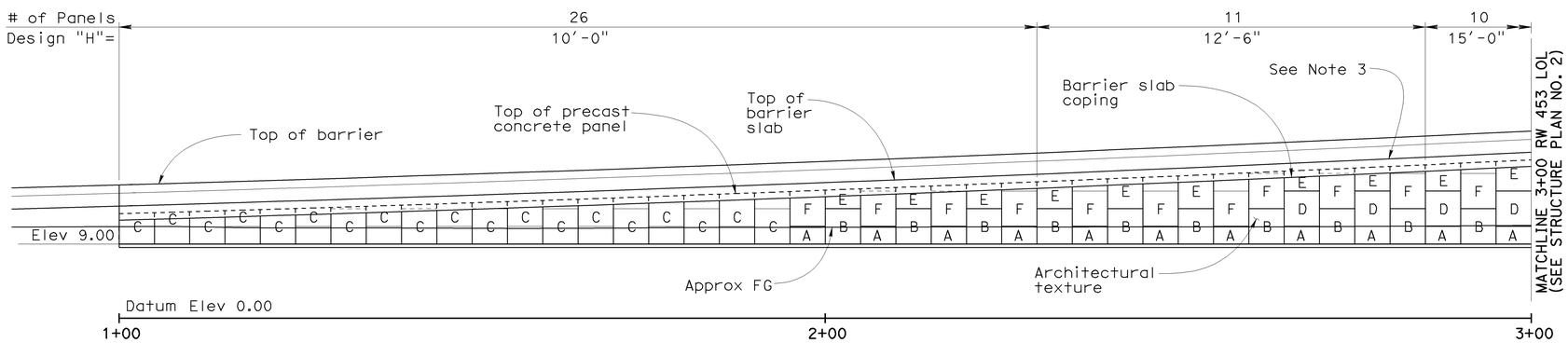

DEVELOPED ELEVATION

1" = 10'

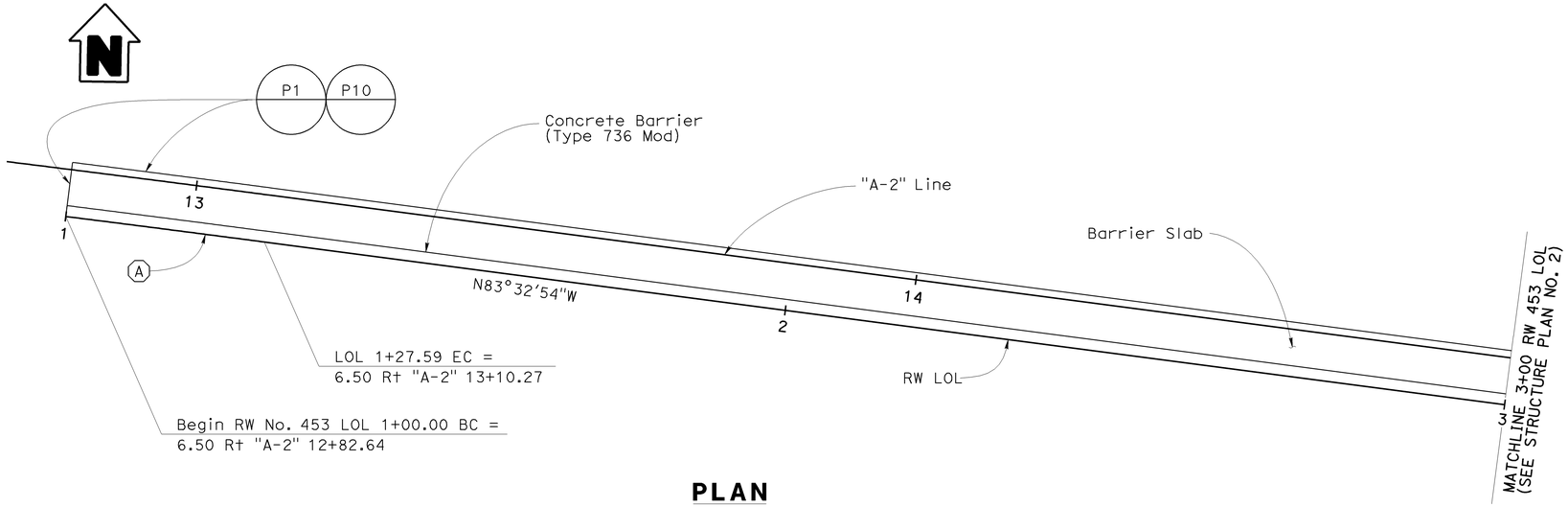

PLAN

1" = 10'

LEGEND

Indicates interval in years from time of construction to time of removal of inspection wire

30 D

Indicates location of inspection wire, see "Wall Details No. 2" sheet

Indicates panel type designation (See Notes 1 & 2)

NOTES

1. For precast panel details, see "Panel Details No. 1" and "Panel Details No. 2" sheets
2. For architectural texture and details, see "Architectural Panel Layout No. 1", "Architectural Panel Layout No. 2", and "Architectural Details No. 1" thru "Architectural Details No. 3" sheets
3. For top of wall elevations, see "Wall Details No. 2" sheet
4. For barrier slab details, see "Wall Details No. 1" sheet
5. Elevation shown at top of leveling pad

CURVE DATA

NO.	R	Δ	T	L
A	5008.50'	00°18'56"	13.80'	27.59'

DESIGN OVERSIGHT Sudhakar Vatti
8-10-09
SIGN OFF DATE

	BY	CHECKED
DESIGN	A. Priley	K. Michalski
DETAILS	A. Priley	J. Hermstad
QUANTITIES	A. Priley	J. Wong

PREPARED FOR THE STATE OF CALIFORNIA DEPARTMENT OF TRANSPORTATION

A. Priley
PROJECT ENGINEER

CU 12235
EA 071631

BRIDGE NO. 55E0104
POST MILE R0.6

RETAINING WALL NO. 453
STRUCTURE PLAN NO. 1

DISREGARD PRINTS BEARING EARLIER REVISION DATES

REVISION DATES (PRELIMINARY STAGE ONLY) 04/06/09 07/27/09

SHEET 4 OF 22

DESIGN DETAIL SHEET (ENGLISH) (REV. 2/25/05)

ORIGINAL SCALE IN INCHES FOR REDUCED PLANS 0 1 2 3

FILE => 55-e0104-c-sp01.dgn

USERNAME => trmmguye DATE PLOTTED => 04-FEB-2010 TIME PLOTTED => 10:16

DIST	COUNTY	ROUTE	POST MILES TOTAL PROJECT	SHEET No	TOTAL SHEETS
12	Ora	22,405, 605	R0.3/R0.9, 22.3/24.0,3.0/R1.6	1849	1929

REGISTERED CIVIL ENGINEER 07-27-09 DATE

2-1-10
PLANS APPROVAL DATE

REGISTERED PROFESSIONAL ENGINEER
A. Priley
No. C 73375
Exp. 12-31-10
CIVIL
STATE OF CALIFORNIA

The State of California or its officers or agents shall not be responsible for the accuracy or completeness of electronic copies of this plan sheet.

OCTA
550 SOUTH MAIN STREET
ORANGE, CA 92863

TRC
21 TECHNOLOGY DR
IRVINE, CA 92618

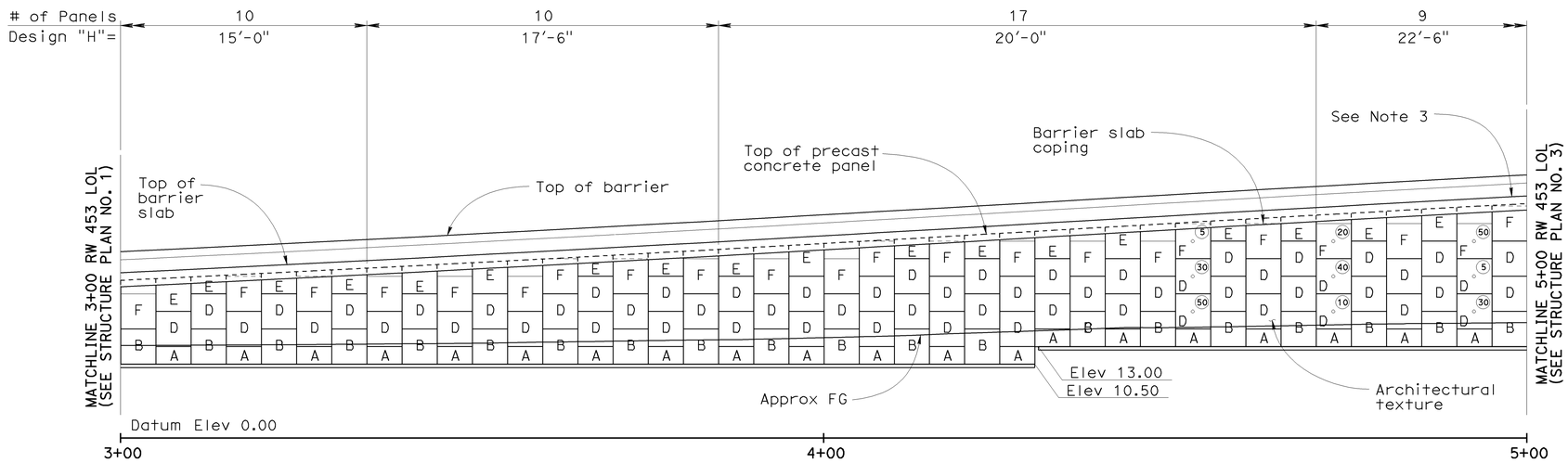

DEVELOPED ELEVATION

1" = 10'

LEGEND

Indicates interval in years from time of construction to time of removal of inspection wire

Indicates location of inspection wire, see "Wall Details No. 2" sheet

Indicates panel type designation (See Notes 1 & 2)

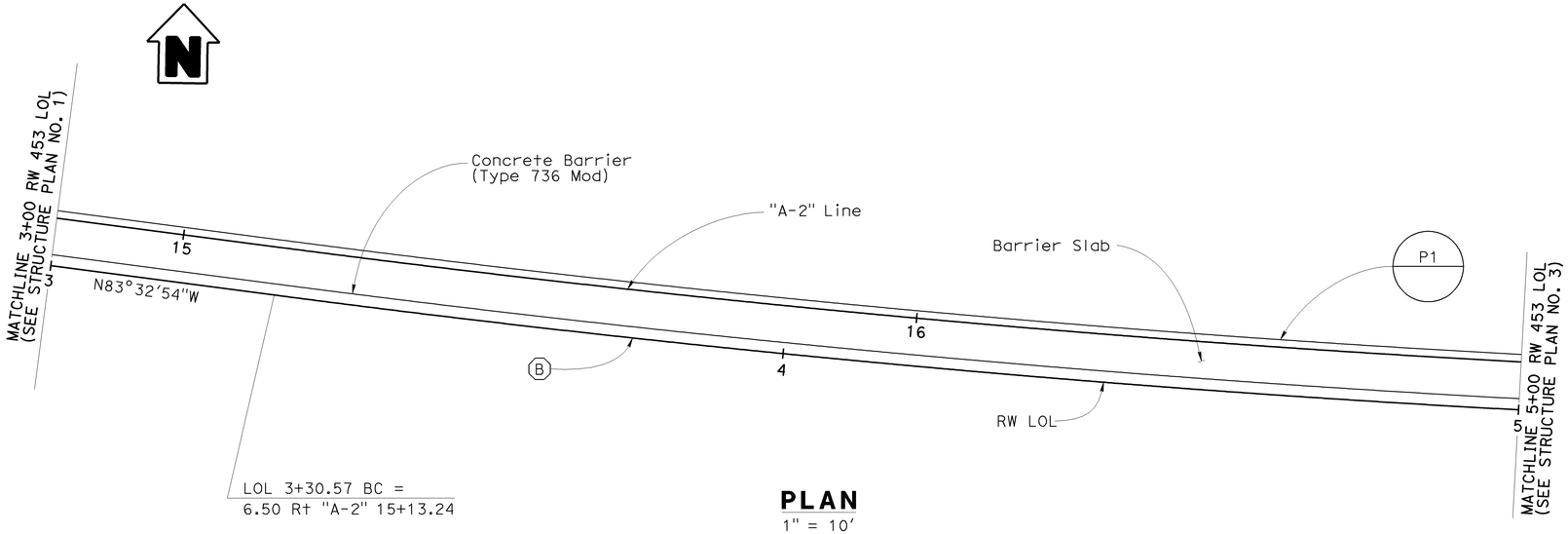

PLAN

1" = 10'

NOTES

1. For precast panel details, see "Panel Details No. 1" and "Panel Details No. 2" sheets
2. For architectural texture and details, see "Architectural Panel Layout No. 1", "Architectural Panel Layout No. 2", and "Architectural Details No. 1" thru "Architectural Details No. 3" sheets
3. For top of wall elevations, see "Wall Details No. 2" sheet
4. For barrier slab details, see "Wall Details No. 1" sheet
5. Elevation shown at top of leveling pad

CURVE DATA

NO.	R	Δ	T	L
B	2206.50'	18°29'49"	359.29'	712.33'

Sudhakar Vatti
DESIGN OVERSIGHT Sudhakar Vatti
8-10-09
SIGN OFF DATE

	BY	CHECKED
DESIGN	A. Priley	K. Michalski
DETAILS	A. Priley	J. Hermstad
QUANTITIES	A. Priley	J. Wong

PREPARED FOR THE STATE OF CALIFORNIA DEPARTMENT OF TRANSPORTATION

A. Priley
PROJECT ENGINEER

CU 12235
EA 071631

BRIDGE NO. 55E0104
POST MILE R0.6

RETAINING WALL NO. 453
STRUCTURE PLAN NO. 2

DESIGN DETAIL SHEET (ENGLISH) (REV. 2/25/05)

ORIGINAL SCALE IN INCHES FOR REDUCED PLANS 0 1 2 3

DISREGARD PRINTS BEARING EARLIER REVISION DATES

REVISION DATES (PRELIMINARY STAGE ONLY) 04/06/09 07/27/09

SHEET 5 OF 22

FILE => 55-e0104-c-sp02.dgn

USERNAME => trmmguye DATE PLOTTED => 04-FEB-2010 TIME PLOTTED => 10:16

DIST	COUNTY	ROUTE	POST MILES TOTAL PROJECT	SHEET No	TOTAL SHEETS
12	Ora	22,405, 605	R0.3/R0.9, 22.3/24.0,3.0/R1.6	1850	1929

REGISTERED CIVIL ENGINEER 07-27-09 DATE

2-1-10
PLANS APPROVAL DATE

REGISTERED PROFESSIONAL ENGINEER A. Priley No. C 73375 Exp. 12-31-10 CIVIL STATE OF CALIFORNIA

The State of California or its officers or agents shall not be responsible for the accuracy or completeness of electronic copies of this plan sheet.

OCTA
550 SOUTH MAIN STREET
ORANGE, CA 92863

TRC
21 TECHNOLOGY DR
IRVINE, CA 92618

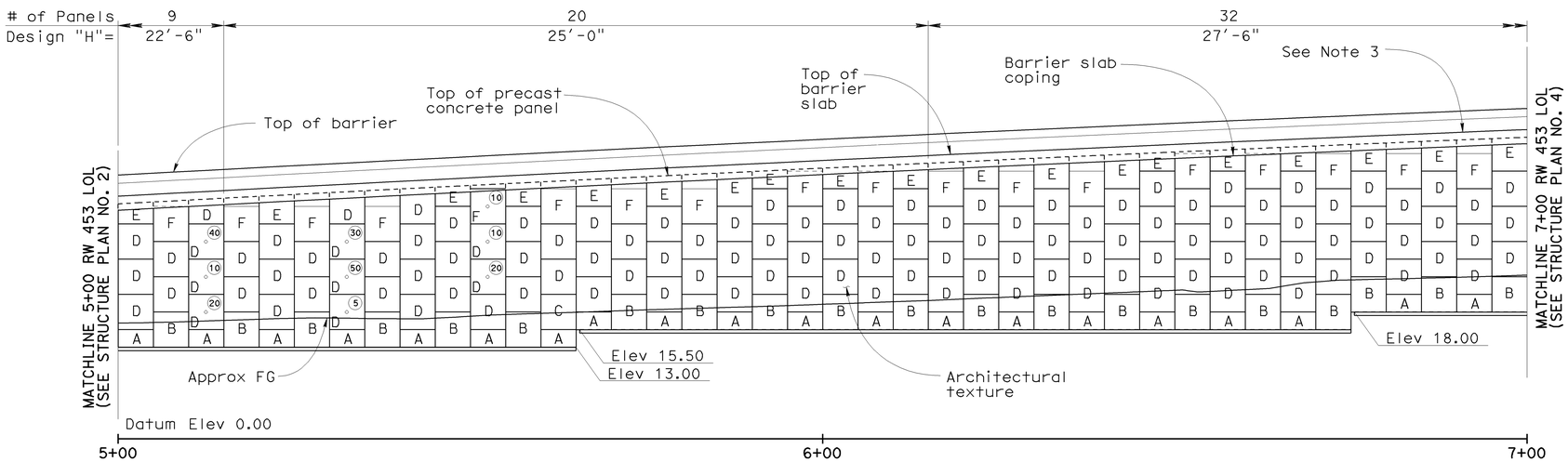

DEVELOPED ELEVATION

1" = 10'

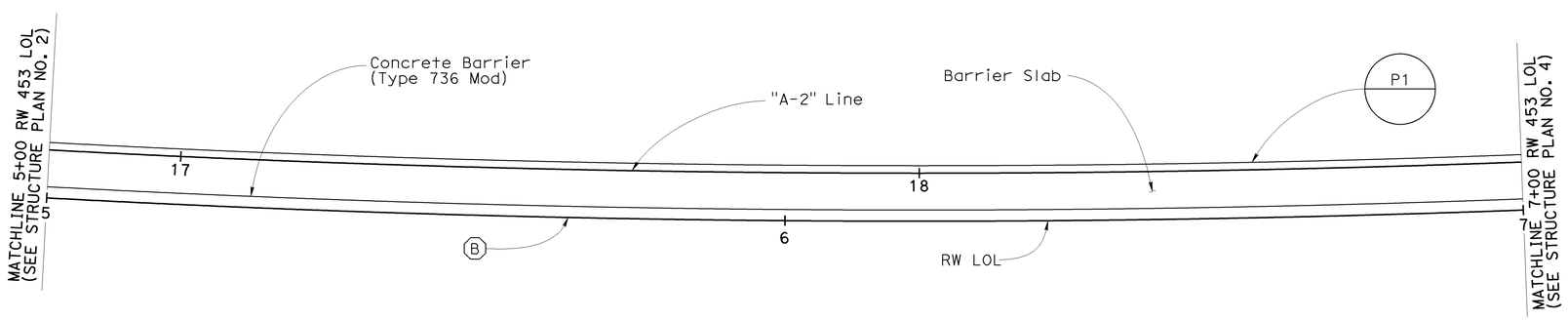

PLAN

1" = 10'

LEGEND

Indicates interval in years from time of construction to time of removal of inspection wire

Indicates location of inspection wire, see "Wall Details No. 2" sheet

Indicates panel type designation (See Notes 1 & 2)

NOTES

1. For precast panel details, see "Panel Details No. 1" and "Panel Details No. 2" sheets
2. For architectural texture and details, see "Architectural Panel Layout No. 1", "Architectural Panel Layout No. 2", and "Architectural Details No. 1" thru "Architectural Panel Details No. 3" sheets
3. For top of wall elevations, see "Wall Details No. 2" sheet
4. For barrier slab details, see "Wall Details No. 1" sheet
5. Elevation shown at top of leveling pad

CURVE DATA

NO.	R	Δ	T	L
B	2206.50'	18°29'49"	359.29'	712.33'

Sudhakar Vatti
DESIGN OVERSIGHT Sudhakar Vatti
8-10-09
SIGN OFF DATE

	BY	CHECKED
DESIGN	A. Priley	K. Michalski
DETAILS	A. Priley	J. Hermstad
QUANTITIES	A. Priley	J. Wong

PREPARED FOR THE STATE OF CALIFORNIA DEPARTMENT OF TRANSPORTATION

A. Priley
PROJECT ENGINEER

BRIDGE NO. 55E0104
POST MILE R0.6

RETAINING WALL NO. 453
STRUCTURE PLAN NO. 3

DESIGN DETAIL SHEET (ENGLISH) (REV. 2/25/05)

ORIGINAL SCALE IN INCHES FOR REDUCED PLANS 0 1 2 3

CU 12235
EA 071631

DISREGARD PRINTS BEARING EARLIER REVISION DATES

REVISION DATES (PRELIMINARY STAGE ONLY) 04/06/09 07/27/09

SHEET 6 OF 22

FILE => 55-e0104-c-sp03.dgn

USERNAME => trmnguye DATE PLOTTED => 04-FEB-2010 TIME PLOTTED => 10:16

DIST	COUNTY	ROUTE	POST MILES TOTAL PROJECT	SHEET No	TOTAL SHEETS
12	Ora	22,405, 605	R0.3/R0.9, 22.3/24.0,3.0/R1.6	1851	1929

REGISTERED CIVIL ENGINEER 07-27-09 DATE

2-1-10
PLANS APPROVAL DATE

REGISTERED PROFESSIONAL ENGINEER A. Priley No. C 73375 Exp. 12-31-10 CIVIL STATE OF CALIFORNIA

The State of California or its officers or agents shall not be responsible for the accuracy or completeness of electronic copies of this plan sheet.

OCTA
550 SOUTH MAIN STREET
ORANGE, CA 92863

TRC
21 TECHNOLOGY DR
IRVINE, CA 92618

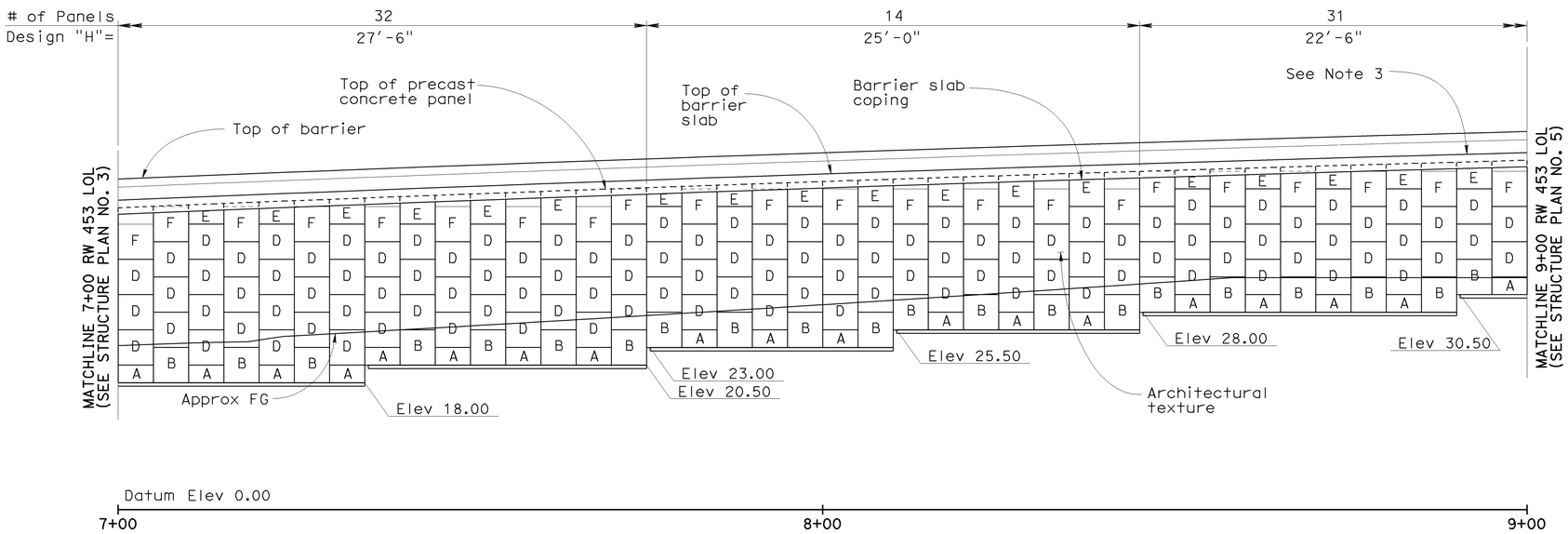

DEVELOPED ELEVATION

1" = 10'

LEGEND

Indicates interval in years from time of construction to time of removal of inspection wire

30 / D — Indicates location of inspection wire, see "Wall Details No. 2" sheet

Indicates panel type designation (See Notes 1 & 2)

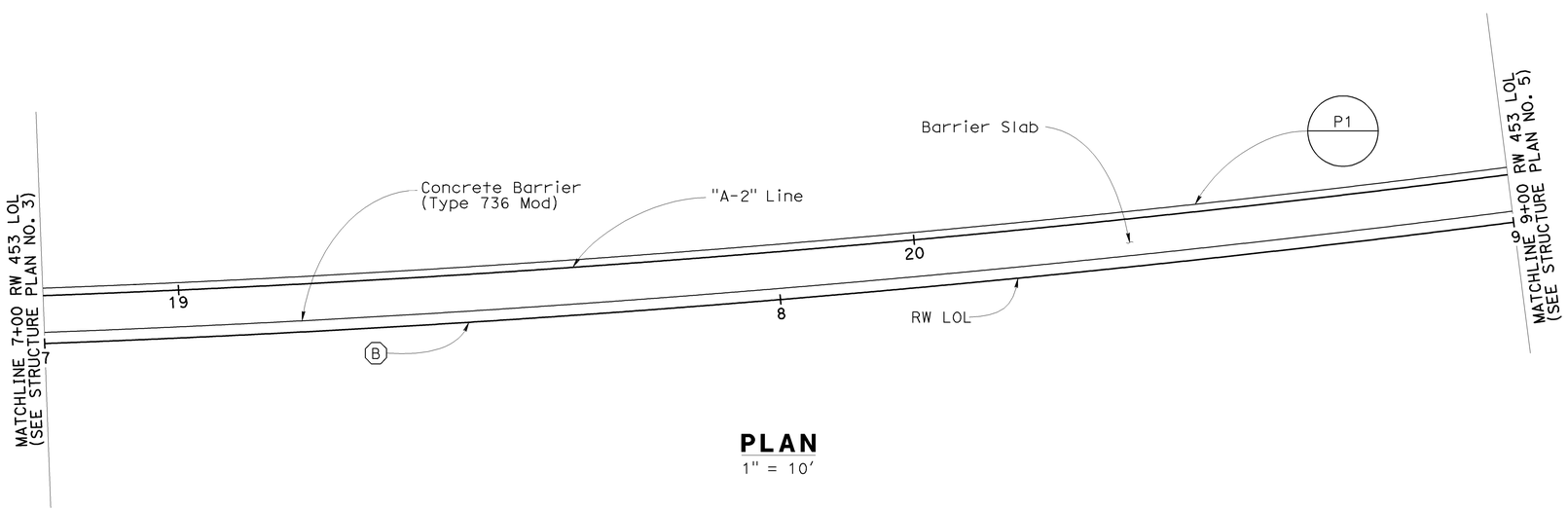

PLAN

1" = 10'

NOTES

1. For precast panel details, see "Panel Details No. 1" and "Panel Details No. 2" sheets
2. For architectural texture and details, see "Architectural Panel Layout No. 1", "Architectural Panel Layout No. 2", and "Architectural Details No. 1" thru "Architectural Panel Details No. 3" sheets
3. For top of wall elevations, see "Wall Details No. 2" sheet
4. For barrier slab details, see "Wall Details No. 1" sheet
5. Elevation shown at top of leveling pad

CURVE DATA

NO.	R	Δ	T	L
B	2206.50'	18°29'49"	359.29'	712.33'

Sudhakar Vatti
DESIGN OVERSIGHT Sudhakar Vatti
8-10-09
SIGN OFF DATE

	BY	CHECKED
DESIGN	A. Priley	K. Michalski
DETAILS	A. Priley	J. Hermstad
QUANTITIES	A. Priley	J. Wong

PREPARED FOR THE STATE OF CALIFORNIA DEPARTMENT OF TRANSPORTATION

A. Priley
PROJECT ENGINEER

BRIDGE NO. 55E0104
POST MILE R0.6

RETAINING WALL NO. 453
STRUCTURE PLAN NO. 4

DESIGN DETAIL SHEET (ENGLISH) (REV. 2/25/05)

ORIGINAL SCALE IN INCHES FOR REDUCED PLANS 0 1 2 3

CU 12235
EA 071631

DISREGARD PRINTS BEARING EARLIER REVISION DATES

REVISION DATES (PRELIMINARY STAGE ONLY) 04/06/09 07/27/09

SHEET 7 OF 22

FILE => 55-e0104-c-sp04.dgn

USERNAME => trcarol DATE PLOTTED => 04-FEB-2010 TIME PLOTTED => 10:59

DIST	COUNTY	ROUTE	POST MILES TOTAL PROJECT	SHEET No	TOTAL SHEETS
12	Ora	22,405, 605	R0.3/R0.9, 22.3/24.0,3.0/R1.6	1852	1929

REGISTERED CIVIL ENGINEER 07-27-09 DATE

2-1-10
PLANS APPROVAL DATE

REGISTERED PROFESSIONAL ENGINEER A. Priley No. C 73375 Exp. 12-31-10 CIVIL STATE OF CALIFORNIA

The State of California or its officers or agents shall not be responsible for the accuracy or completeness of electronic copies of this plan sheet.

OCTA
550 SOUTH MAIN STREET
ORANGE, CA 92863

TRC
21 TECHNOLOGY DR
IRVINE, CA 92618

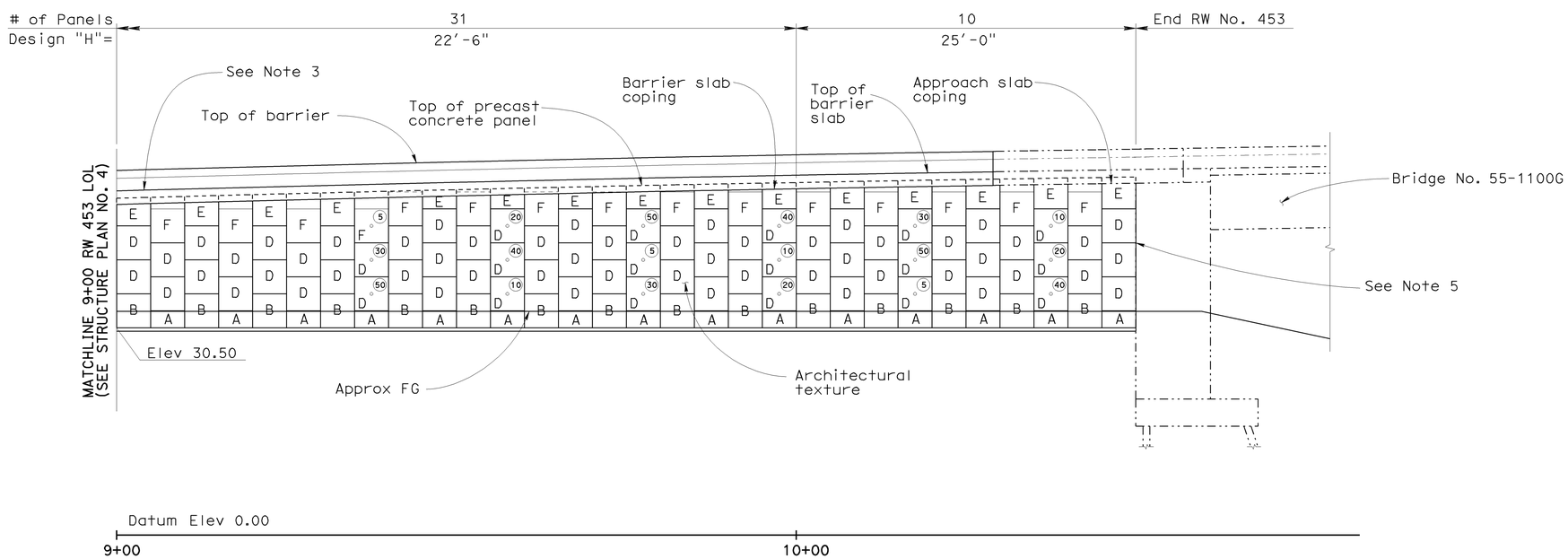

DEVELOPED ELEVATION

1" = 10'

LEGEND

Indicates interval in years from time of construction to time of removal of inspection wire

Indicates location of inspection wire, see "Wall Details No. 2" sheet

Indicates panel type designation (See Notes 1 & 2)

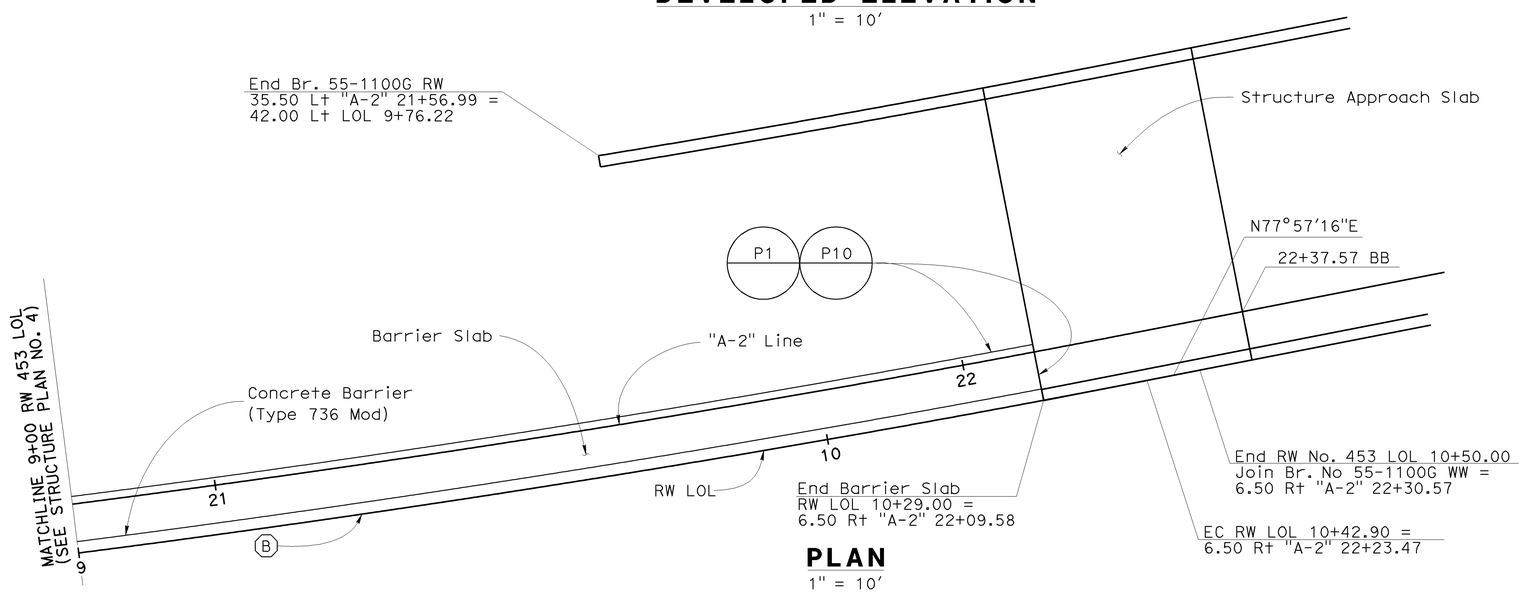

PLAN

1" = 10'

NOTES

1. For precast panel details, see "Panel Details No. 1" and "Panel Details No. 2" sheets
2. For architectural texture and details, see "Architectural Panel Layout No. 1", "Architectural Panel Layout No. 2", and "Architectural Details No. 1" thru "Architectural Panel Details No. 3" sheets
3. For top of wall elevations, see "Wall Details No. 2" sheet
4. For barrier slab details, see "Wall Details No. 1" sheet
5. For connection details between precast concrete panels and concrete wall, see "Wall Details No. 2" sheet
6. Elevation shown at top of leveling pad

CURVE DATA

NO.	R	Δ	T	L
B	2206.50'	18°29'49"	359.29'	712.33'

Sudhakar Vatti
DESIGN OVERSIGHT Sudhakar Vatti
8-10-09
SIGN OFF DATE

	BY	CHECKED
DESIGN	A. Priley	K. Michalski
DETAILS	A. Priley	J. Hermstad
QUANTITIES	A. Priley	J. Wong

PREPARED FOR THE STATE OF CALIFORNIA DEPARTMENT OF TRANSPORTATION

A. Priley
PROJECT ENGINEER

CU 12235
EA 071631

BRIDGE NO. 55E0104
POST MILE R0.6

RETAINING WALL NO. 453
STRUCTURE PLAN NO. 5

DISREGARD PRINTS BEARING EARLIER REVISION DATES

REVISION DATES (PRELIMINARY STAGE ONLY) 04/06/09 07/27/09

SHEET 8 OF 22

DESIGN DETAIL SHEET (ENGLISH) (REV. 2/25/05)

ORIGINAL SCALE IN INCHES FOR REDUCED PLANS 0 1 2 3

FILE => 55-e0104-c-sp05.dgn

USERNAME => trcarol DATE PLOTTED => 04-FEB-2010 TIME PLOTTED => 10:53

DIST	COUNTY	ROUTE	POST MILES TOTAL PROJECT	SHEET No	TOTAL SHEETS
12	Ora	22,405, 605	R0.3/R0.9, 22.3/24.0,3.0/R1.6	1853	1929

REGISTERED CIVIL ENGINEER 07-27-09 DATE

2-1-10
PLANS APPROVAL DATE

REGISTERED PROFESSIONAL ENGINEER A. Priley No. C 73375 Exp. 12-31-10 CIVIL STATE OF CALIFORNIA

The State of California or its officers or agents shall not be responsible for the accuracy or completeness of electronic copies of this plan sheet.

OCTA
550 SOUTH MAIN STREET
ORANGE, CA 92863

TRC
21 TECHNOLOGY DR
IRVINE, CA 92618

NOTES

1. Place reinforced elastomeric bearing pads in all of the panel joints. Place one in each vertical joint at intersections with horizontal joints. Place two per panel in each horizontal joint.
   ¾" x 2⅜" x 6" for vertical joints
   ¾" x 4" x 6" for horizontal joints
2. Top of panels C, E and F shall be cast to conform to wall profile
3. Omit wire mat when vertical spacing between mats is less than 6"
4. Top welded wire mat in wall shall be sloped -5% min to -15% max with respect to the roadway slope. Wire mats below the top level may be sloped down as required to maintain 6" min separation from other mats

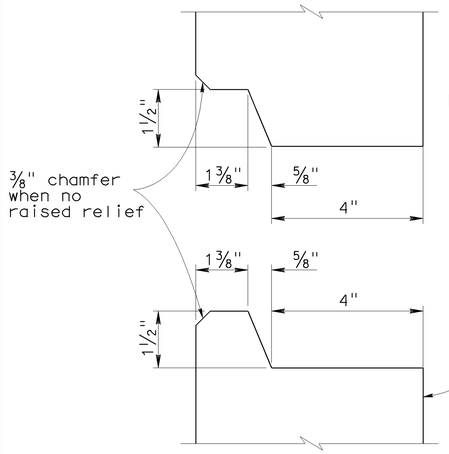

HORIZONTAL JOINT DETAIL

6" = 1'-0"

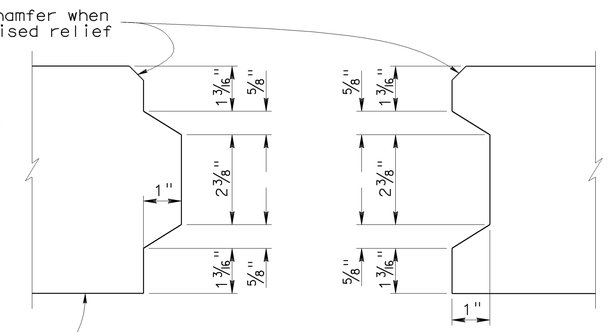

VERTICAL JOINT DETAIL

6" = 1'-0"

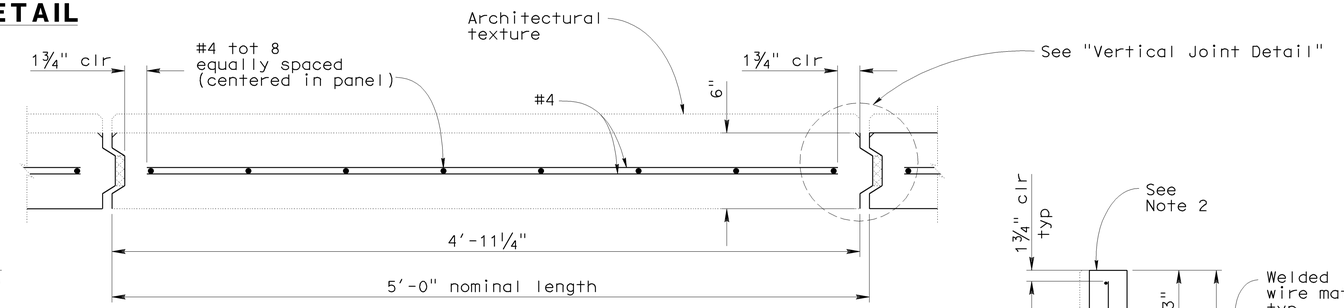

PRECAST PANEL PLAN

2" = 1'-0"

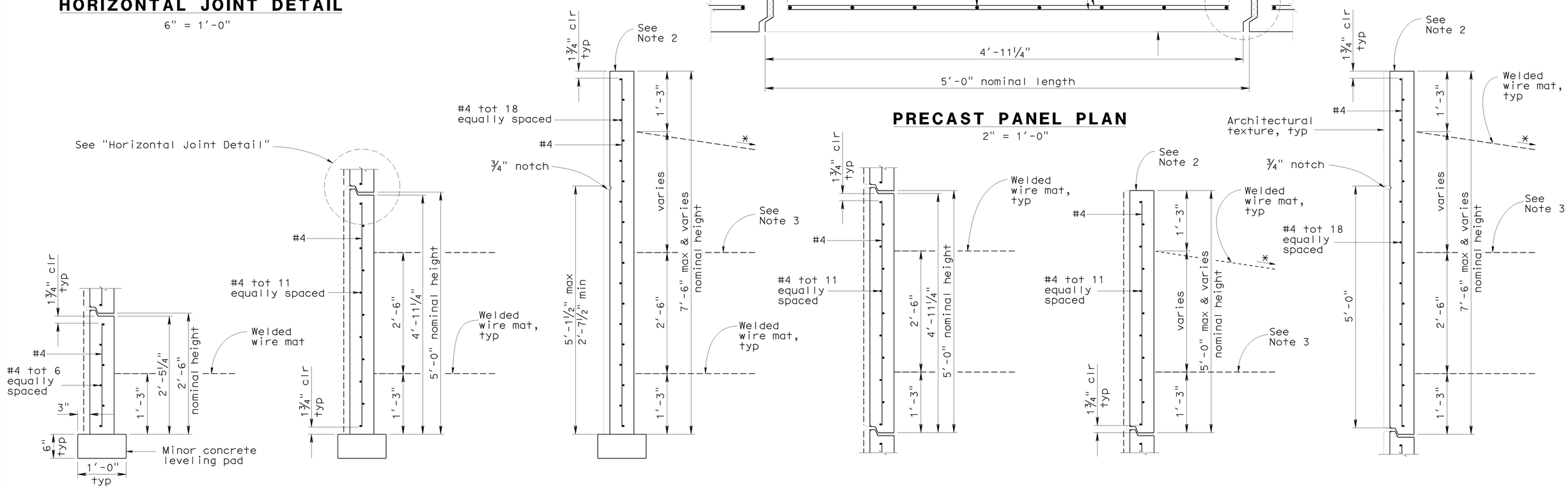

PANEL A

PANEL B

PANEL C

PANEL D

PANEL E

PANEL F

PRECAST PANEL SECTIONS

1" = 1'-0"
* See Note 4

Sudhakar Vatti
DESIGN OVERSIGHT Sudhakar Vatti
8-10-09
SIGN OFF DATE

	BY	CHECKED
DESIGN	A. Priley	K. Michalski
DETAILS	A. Priley	J. Hermstad
QUANTITIES	A. Priley	J. Wong

PREPARED FOR THE STATE OF CALIFORNIA DEPARTMENT OF TRANSPORTATION

A. Priley
PROJECT ENGINEER

BRIDGE NO. 55E0104
POST MILE R0.6

RETAINING WALL NO. 453
PANEL DETAILS NO. 1

DESIGN DETAIL SHEET (ENGLISH) (REV. 2/25/05)

ORIGINAL SCALE IN INCHES FOR REDUCED PLANS 0 1 2 3

CU 12235
EA 071631

DISREGARD PRINTS BEARING EARLIER REVISION DATES
REVISION DATES (PRELIMINARY STAGE ONLY) 04/06/09 07/27/09

SHEET 9 OF 22

FILE => 55-e0104-f-pdt01.dgn

USERNAME => trcarol DATE PLOTTED => 04-FEB-2010 TIME PLOTTED => 10:59

DIST	COUNTY	ROUTE	POST MILES TOTAL PROJECT	SHEET No	TOTAL SHEETS
12	Ora	22,405, 605	R0.3/R0.9, 22.3/24.0,3.0/R1.6	1854	1929

REGISTERED CIVIL ENGINEER 07-27-09 DATE

2-1-10
PLANS APPROVAL DATE

REGISTERED PROFESSIONAL ENGINEER A. Priley No. C 73375 Exp. 12-31-10 CIVIL STATE OF CALIFORNIA

The State of California or its officers or agents shall not be responsible for the accuracy or completeness of electronic copies of this plan sheet.

OCTA
550 SOUTH MAIN STREET
ORANGE, CA 92863

TRC
21 TECHNOLOGY DR
IRVINE, CA 92618

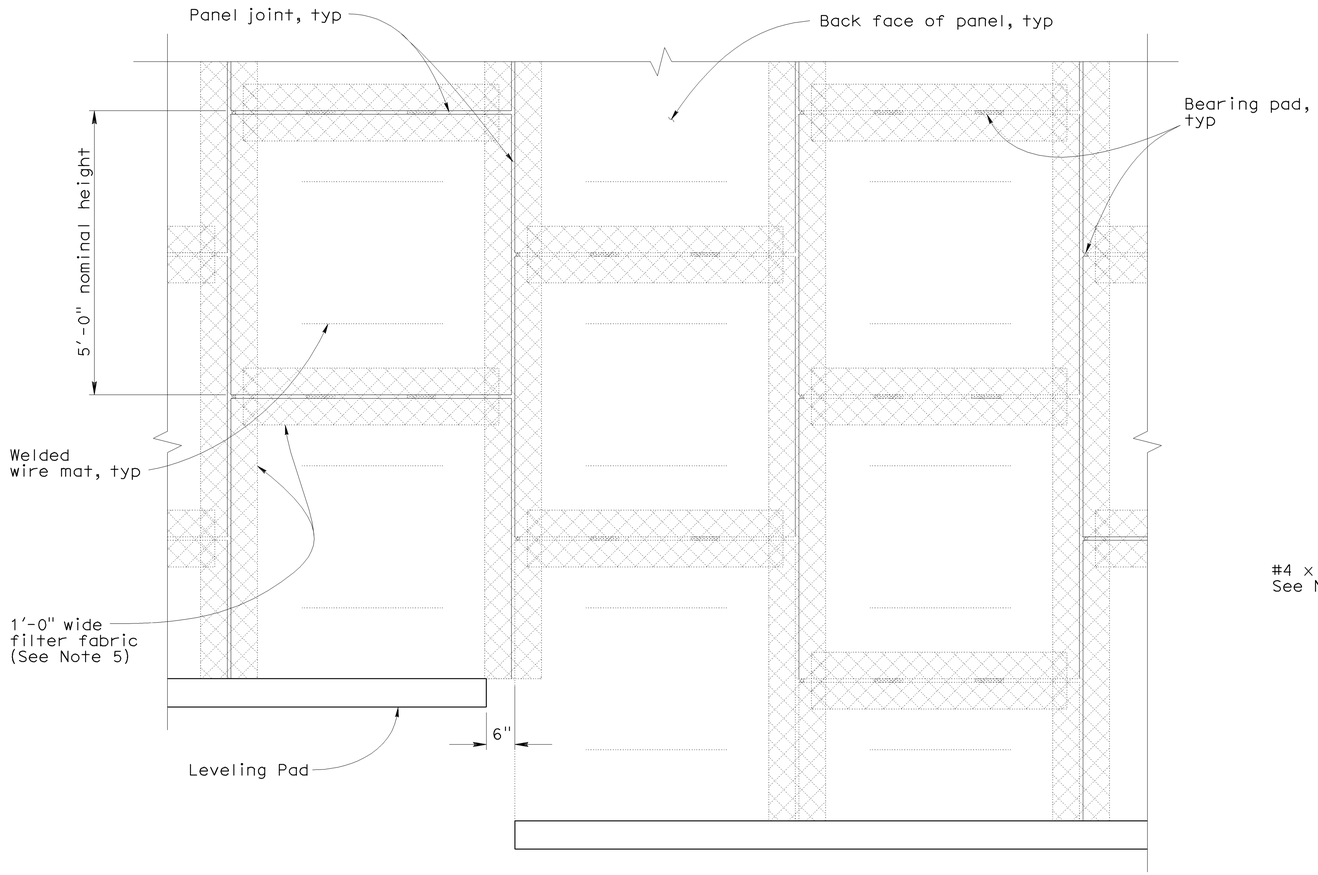

BACK FACE OF WALL ELEVATION

3/4" = 1'-0"

NOTES

1. Distance as required to permit coupler to be swaged
2. Place bar centered on connector mat but not welded to it
3. Length equals "Base width" of wall as shown in the "Soil Reinforcement Table," except it shall not be less than 16'-0" for the top 2 levels of mats at the top of the wall
4. See the "Soil Reinforcement Table" for longitudinal wire size and transverse wire spacing
5. Bond a strip of filter fabric 1'-0" wide over the full length of all panel joints

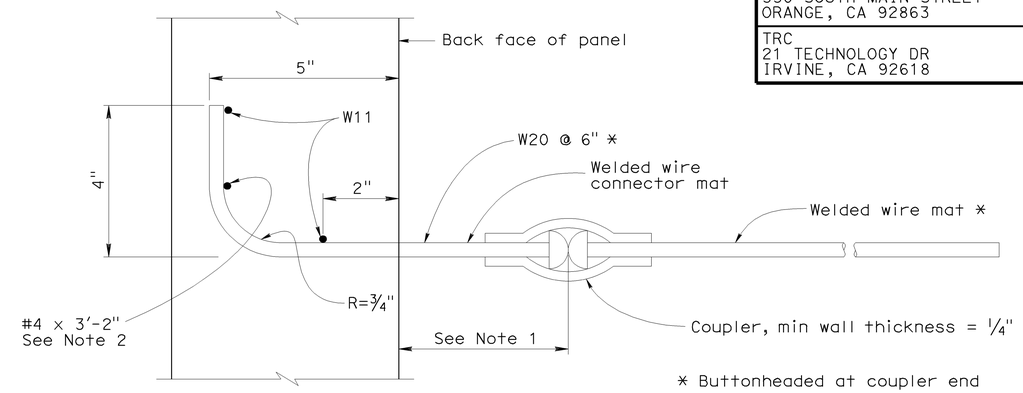

* Buttonheaded at coupler end

Note: Panel reinforcement not shown

SECTION A-A

No Scale

SOIL REINFORCEMENT TABLE

Design "H"	10'-0"	12'-6"	15'-0"	17'-6"	20'-0"	22'-6"	25'-0"	27'-6"
Base Width	8'-0"	9'-0"	11'-0"	12'-0"	14'-0"	16'-0"	18'-0"	19'-0"
Top level of mesh: Levels below:	1-W11x6" 2-W11x9" W11x12"		1-W11x6" 2-W11x9" 2-W11x12" W11x18"			1-W11x6" 2-W11x12" 2-W11x18" W11x24"		

Design "H"	30'-0"	32'-6"	35'-0"	37'-6"	40'-0"	42'-6"	45'-0"	47'-6"
Base Width	21'-0"	23'-0"	25'-0"	26'-0"	28'-0"	30'-0"	32'-0"	33'-0"
Top level of mesh: Levels below:	1-W11x9" 1-W11x12" 2-W11x18" 6-W11x24" W15x30"		1-W11x9" 1-W11x18" 8-W11x24" W15x30"			1-W11x9" 9-W11x24" 5-W15x30" W20x30"		

Note: Mesh is indicated sequentially from top level of mesh to bottom level of mesh

LEGEND

of levels — Longitudinal Wire Size

2-W11x12"

Transverse Spacing

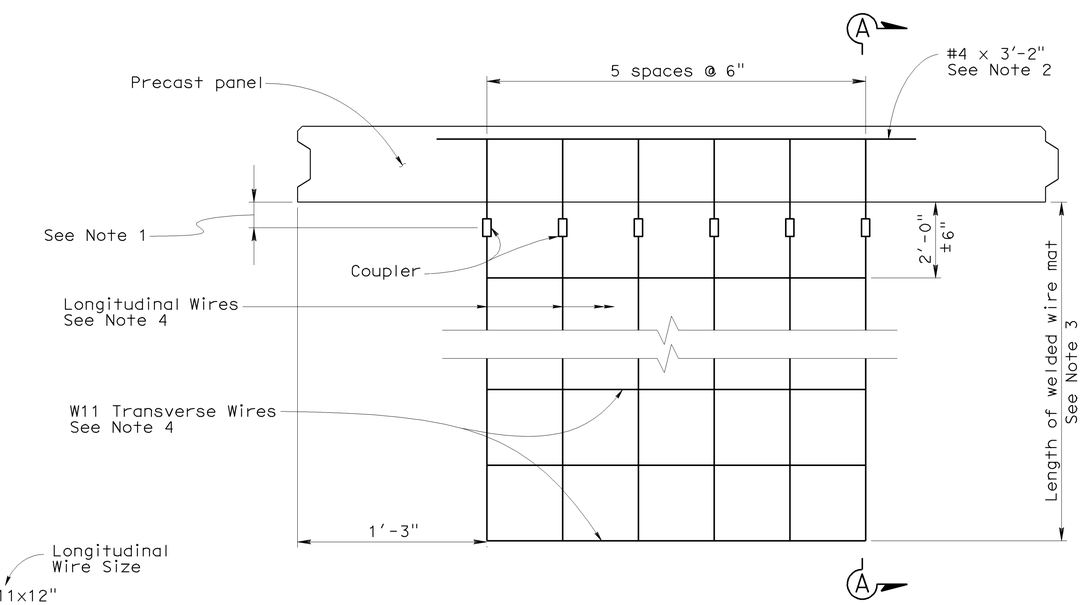

WELDED WIRE MAT DETAIL

No Scale

Sudhakar Vatti
DESIGN OVERSIGHT Sudhakar Vatti

8-10-09
SIGN OFF DATE

	BY	CHECKED
DESIGN	A. Priley	K. Michalski
DETAILS	A. Priley	J. Hermstad
QUANTITIES	A. Priley	J. Wong

PREPARED FOR THE STATE OF CALIFORNIA DEPARTMENT OF TRANSPORTATION

A. Priley
PROJECT ENGINEER

BRIDGE NO. 55E0104
POST MILE R0.6

RETAINING WALL NO. 453
PANEL DETAILS NO. 2

DESIGN DETAIL SHEET (ENGLISH) (REV. 2/25/05)

ORIGINAL SCALE IN INCHES FOR REDUCED PLANS 0 1 2 3

CU 12235
EA 071631

DISREGARD PRINTS BEARING EARLIER REVISION DATES → 04/06/09 07/27/09

REVISION DATES (PRELIMINARY STAGE ONLY)

SHEET 10 OF 22

FILE => 55-e0104-f-pdt02.dgn

USERNAME => trcarol DATE PLOTTED => 04-FEB-2010 TIME PLOTTED => 10:59

DIST	COUNTY	ROUTE	POST MILES TOTAL PROJECT	SHEET No	TOTAL SHEETS
12	Ora	22,405, 605	R0.3/R0.9, 22.3/24.0,3.0/R1.6	1855	1929

REGISTERED CIVIL ENGINEER 07-27-09 DATE

2-1-10
PLANS APPROVAL DATE

REGISTERED PROFESSIONAL ENGINEER A. Priley No. C 73375 Exp. 12-31-10 CIVIL STATE OF CALIFORNIA

The State of California or its officers or agents shall not be responsible for the accuracy or completeness of electronic copies of this plan sheet.

OCTA
550 SOUTH MAIN STREET
ORANGE, CA 92863

TRC
21 TECHNOLOGY DR
IRVINE, CA 92618

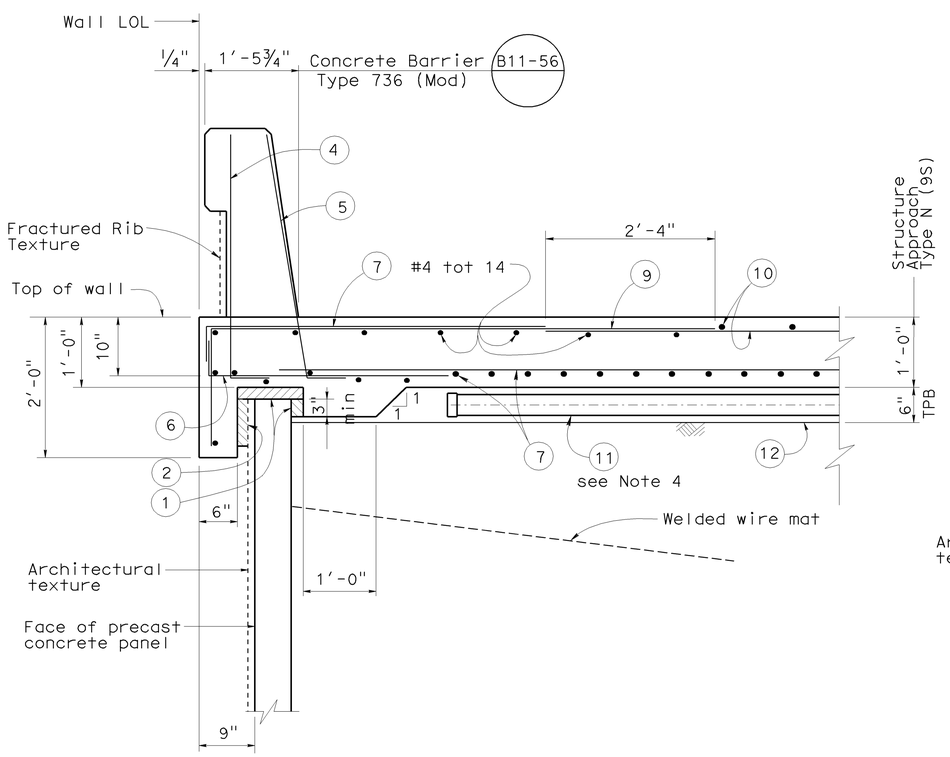

SECTION AT TOP OF WALL WITH STRUCTURE APPROACH SLAB AND CONCRETE BARRIER

No Scale

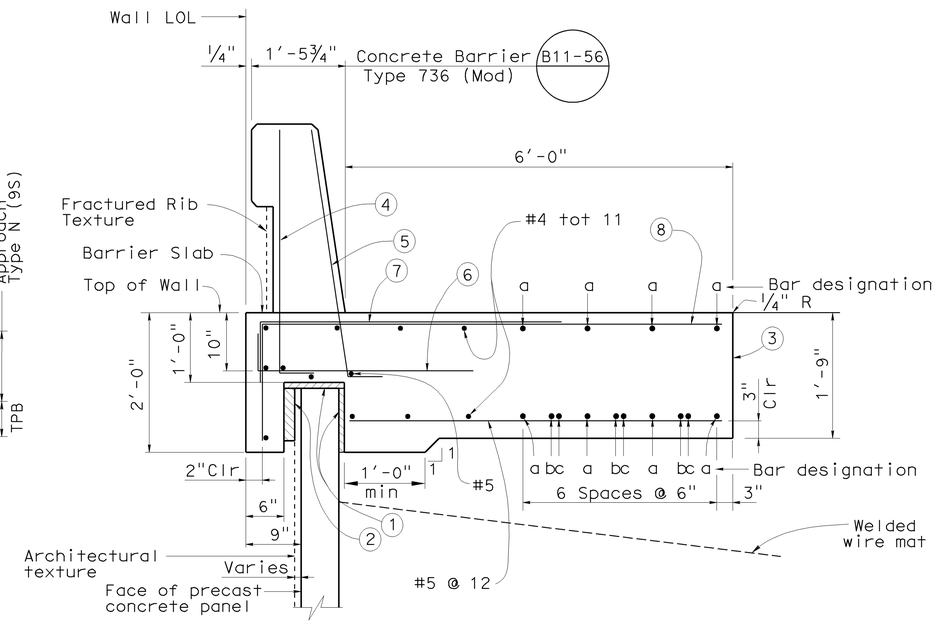

SECTION AT TOP OF WALL WITH BARRIER SLAB AND CONCRETE BARRIER

No Scale

LEGEND

"a" bar = #6 continuous.
"b" bar = #6 X 59'-0"
"c" bar = #6 X 49'-2"

Place "b" and "c" bars at beginning and ending ends of barrier slab

1. 1" Expanded polystyrene
2. 1½" - 3" Expanded polystyrene. Recess expanded polystyrene 2" into coping
3. Contact joint
4. #5 6¼" @ 16 (To be in place prior to barrier slab or approach slab concrete)
5. #5 6¼" @ 8 (To be in place prior to barrier slab or approach slab concrete)
6. #5 6¼" 3'-4" @ 12
7. #5 4'-7" @ 12 bundled with 8 or 9 bars
8. #5 7'-2" @ 12
9. #5 6'-10⅝" @ 12
10. Approach slab reinforcement
11. 3" Plastic pipe (slotted)
12. Filter fabric

NOTES

1. Clearance to reinforcing steel in concrete barrier to be 1"
2. Not all barrier reinforcement shown
3. No expansion joints in concrete barrier or barrier slab within MSE wall limits
4. At high end of subgrade install cap at end of ¾" slotted pipe. See "Bridge Plans" for detail at low end of subgrade

Sudhakar Vatti
DESIGN OVERSIGHT Sudhakar Vatti
8-10-09
SIGN OFF DATE

	BY	CHECKED
DESIGN	A. Priley	K. Michalski
DETAILS	A. Priley	J. Hermstad
QUANTITIES	A. Priley	J. Wong

PREPARED FOR THE STATE OF CALIFORNIA DEPARTMENT OF TRANSPORTATION

A. Priley
PROJECT ENGINEER

BRIDGE NO. 55E0104
POST MILE R0.6

RETAINING WALL NO. 453
WALL DETAILS NO. 1

DESIGN DETAIL SHEET (ENGLISH) (REV. 2/25/05)

ORIGINAL SCALE IN INCHES FOR REDUCED PLANS 0 1 2 3

CU 12235
EA 071631

DISREGARD PRINTS BEARING EARLIER REVISION DATES

REVISION DATES (PRELIMINARY STAGE ONLY) 04/06/09 07/27/09

SHEET 11 OF 22

FILE => 55-e0104-g-wdt01.dgn

USERNAME => rtcarol DATE PLOTTED => 04-FEB-2010 TIME PLOTTED => 10:59

DIST	COUNTY	ROUTE	POST MILES TOTAL PROJECT	SHEET No	TOTAL SHEETS
12	Ora	22,405, 605	R0.3/R0.9, 22.3/24.0,3.0/R1.6	1856	1929

REGISTERED CIVIL ENGINEER 07-27-09 DATE

2-1-10
PLANS APPROVAL DATE

REGISTERED PROFESSIONAL ENGINEER A. Priley No. C 73375 Exp. 12-31-10 CIVIL STATE OF CALIFORNIA

The State of California or its officers or agents shall not be responsible for the accuracy or completeness of electronic copies of this plan sheet.

OCTA
550 SOUTH MAIN STREET
ORANGE, CA 92863

TRC
21 TECHNOLOGY DR
IRVINE, CA 92618

TOP OF WALL ELEVATIONS

RW 453 LOL Station	Top of Wall Elevation (ft)	RW 453 LOL Station	Top of Wall Elevation (ft)
1+00.00	15.87	5+87.50	38.92
1+12.50	16.23	6+00.00	39.52
1+25.00	16.61	6+12.50	40.11
1+37.50	17.02	6+25.00	40.68
1+50.00	17.42	6+37.50	41.25
1+62.50	17.85	6+50.00	41.81
1+75.00	18.29	6+62.50	42.35
1+87.50	18.74	6+75.00	42.88
2+00.00	19.21	6+87.50	43.40
2+12.50	19.70	7+00.00	43.91
2+25.00	20.20	7+12.50	44.42
2+37.50	20.71	7+25.00	44.91
2+50.00	21.24	7+37.50	45.39
2+62.50	21.79	7+50.00	45.85
2+75.00	22.34	7+62.50	46.32
2+87.50	22.92	7+75.00	46.76
3+00.00	23.51	7+87.50	47.20
3+12.50	24.12	8+00.00	47.62
3+25.00	24.73	8+12.50	48.04
3+37.50	25.37	8+25.00	48.45
3+50.00	26.02	8+37.50	48.84
3+62.50	26.67	8+50.00	49.22
3+75.00	27.36	8+62.50	49.60
3+87.50	28.05	8+75.00	49.96
4+00.00	28.76	8+87.50	50.31
4+12.50	29.47	9+00.00	50.66
4+25.00	30.19	9+12.50	50.98
4+37.50	30.92	9+25.00	51.30
4+50.00	31.64	9+37.50	51.61
4+62.50	32.36	9+50.00	51.91
4+75.00	33.07	9+62.50	52.19
4+87.50	33.76	9+75.00	52.47
5+00.00	34.44	9+87.50	52.72
5+12.50	35.11	10+00.00	52.95
5+25.00	35.77	10+12.50	53.18
5+37.50	36.43	10+25.00	53.39
5+50.00	37.06	10+37.50	53.59
5+62.50	37.69	10+50.00	53.78
5+75.00	38.32		

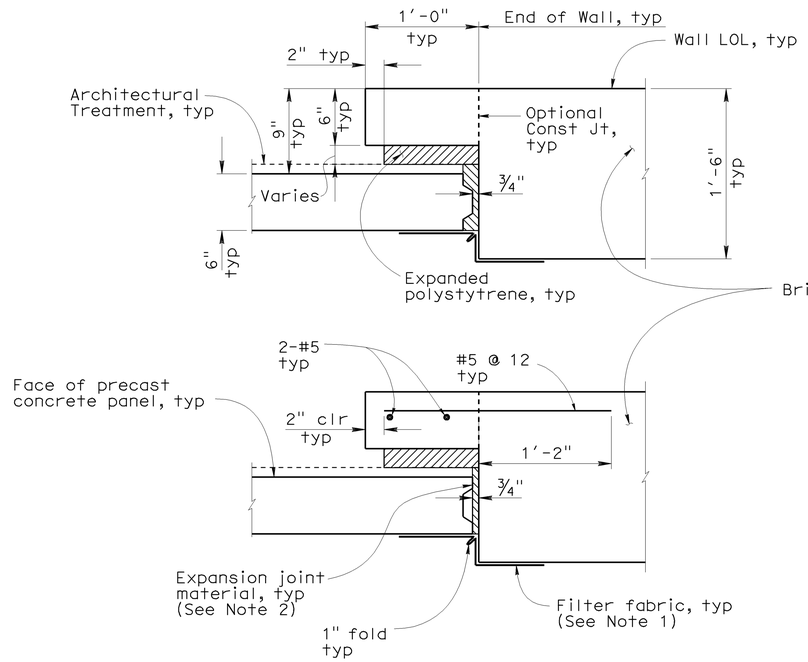

PRECAST PANEL TO CONCRETE WALL JOINT DETAILS

No Scale

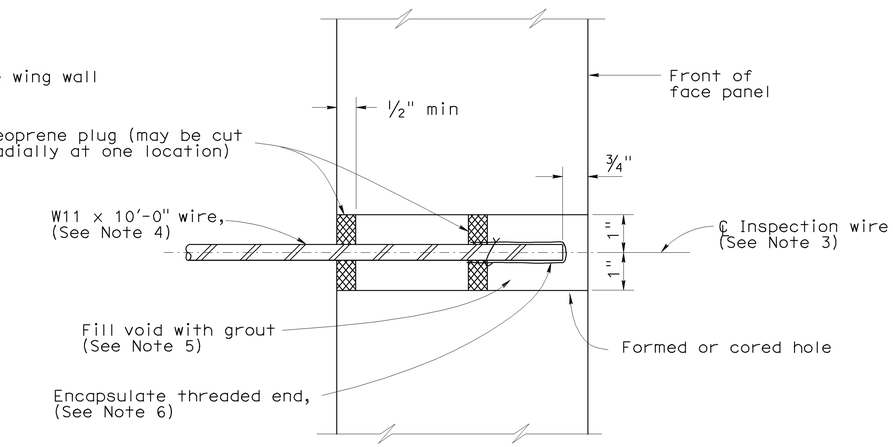

SECTION THRU INSPECTION WIRE

No Scale

NOTES

1. Bond a strip of filter fabric, 1'-6" wide, to back of precast concrete panels and the adjacent concrete wall for entire length of vertical joint
2. Bond expansion joint material to the concrete wall
3. Center inspection wire in panel
4. Fabricate inspection wires from W11 wire representative of the welded wire mats, with ⅜" dia - 16 UNC threads (Unified Coarse threads) for at least 1½" of one end
5. Place inspection wire horizontal and perpendicular to the wall panel prior to backfilling. After backfill placement to a level at least 2'-0" above the inspection wire, dry pack opening with 1000 to 1500 psi mortar. Trowel mortar smooth and flush with face of panel
6. Encapsulate threaded end with corrosion inhibiting mastic and secure round vinyl cover with nylon tie

Sudhakar Vatti
DESIGN OVERSIGHT Sudhakar Vatti
8-10-09
SIGN OFF DATE

	BY	CHECKED
DESIGN	A. Priley	K. Michalski
DETAILS	A. Priley	J. Hermstad
QUANTITIES	A. Priley	J. Wong

PREPARED FOR THE STATE OF CALIFORNIA DEPARTMENT OF TRANSPORTATION

A. Priley
PROJECT ENGINEER

BRIDGE NO. 55E0104
POST MILE R0.6

RETAINING WALL NO. 453
WALL DETAILS NO. 2

DESIGN DETAIL SHEET (ENGLISH) (REV. 2/25/05)

ORIGINAL SCALE IN INCHES FOR REDUCED PLANS 0 1 2 3

CU 12235
EA 071631

DISREGARD PRINTS BEARING EARLIER REVISION DATES

REVISION DATES (PRELIMINARY STAGE ONLY) 04/06/09 07/27/09

SHEET 12 OF 22

FILE => 55-e0104-g-wdt02.dgn

USERNAME => rtrcarol DATE PLOTTED => 04-FEB-2010 TIME PLOTTED => 10:59

DIST	COUNTY	ROUTE	POST MILES TOTAL PROJECT	SHEET No	TOTAL SHEETS
12	Ora	22, 405, 605	R0.3/R0.9, 22.3/24.0,3.0/R1.6	1857	1929

LICENSED LANDSCAPE ARCHITECT

2-1-10
PLANS APPROVAL DATE

LICENSED LANDSCAPE ARCHITECT
CATHY L. JOHNSON
NO. 4545
01-31-10
Renewal Date
07-27-09
Date
STATE OF CALIFORNIA

The State of California or its officers or agents shall not be responsible for the accuracy or completeness of electronic copies of this plan sheet.

OCTA
550 SOUTH MAIN STREET
ORANGE, CA 92863

RBF CONSULTING
14725 ALTON PARKWAY
IRVINE, CA 92618

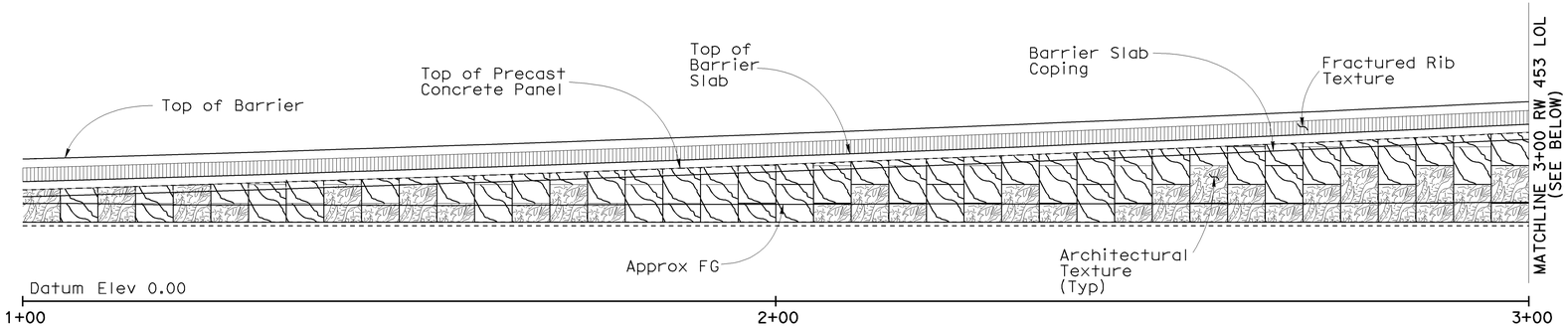

DEVELOPED ELEVATION (SEGMENT 1)

1" = 10'

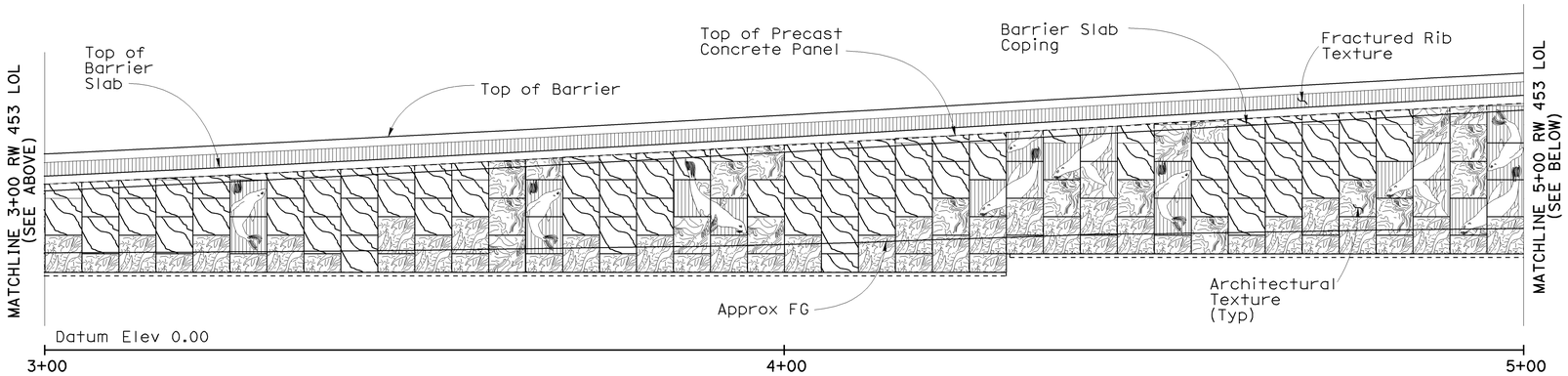

DEVELOPED ELEVATION (SEGMENT 2)

1" = 10'

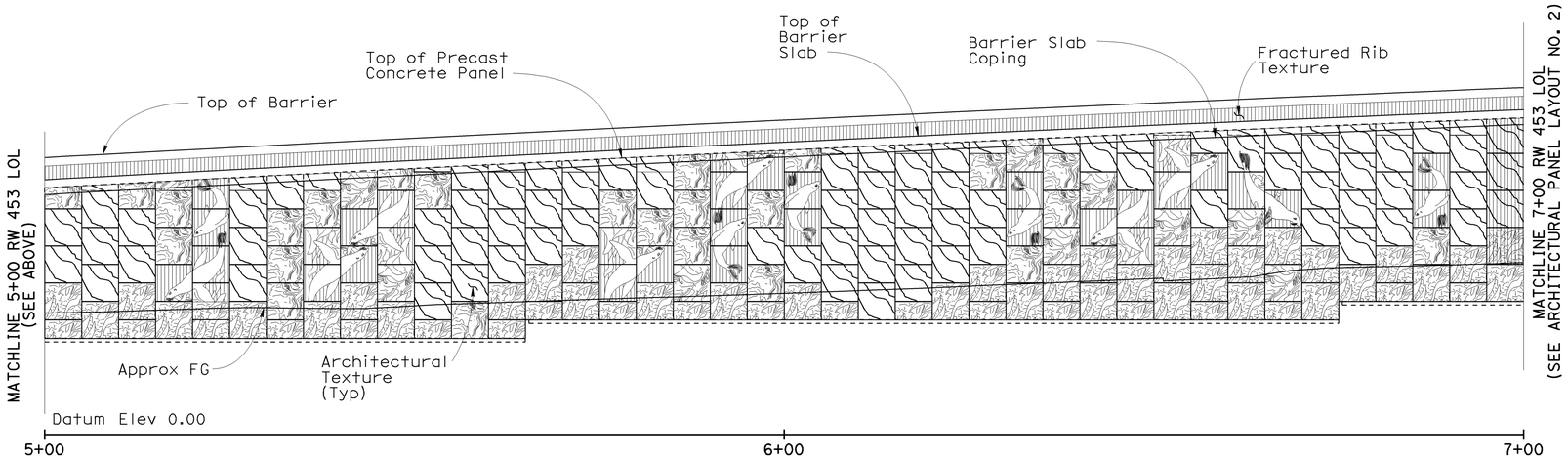

DEVELOPED ELEVATION (SEGMENT 3)

1" = 10'

Sudhakar Vatti
DESIGN OVERSIGHT Sudhakar Vatti
8-10-09
SIGN OFF DATE

DESIGN DETAIL SHEET (ENGLISH) (REV. 2/25/05)

	BY	CHECKED
DESIGN	C. JOHNSON	A. SU
DETAILS	R. KELCHER	A. SU
QUANTITIES	A. PRILEY	J. WONG

ORIGINAL SCALE IN INCHES FOR REDUCED PLANS 0 1 2 3

PREPARED FOR THE STATE OF CALIFORNIA DEPARTMENT OF TRANSPORTATION

A. PRILEY
PROJECT ENGINEER

CU 12235
EA 071631

BRIDGE NO. 55E0104
POST MILE R0.6

RETAINING WALL NO. 453
ARCHITECTURAL PANEL LAYOUT NO. 1

DISREGARD PRINTS BEARING EARLIER REVISION DATES

REVISION DATES (PRELIMINARY STAGE ONLY) 04/06/09 07/27/09

SHEET 13 OF 22

FILE => 55-e0104-s-arch01.dgn

USERNAME => rrcarol DATE PLOTTED => 04-FEB-2010 TIME PLOTTED => 10:59

DIST	COUNTY	ROUTE	POST MILES TOTAL PROJECT	SHEET No	TOTAL SHEETS
12	Ora	22, 405, 605	R0.3/R0.9 22.3/24.0,3.0/R1.6	1858	1929

LICENSED LANDSCAPE ARCHITECT

2-1-10
PLANS APPROVAL DATE

LICENSED LANDSCAPE ARCHITECT CATHY L. JOHNSON NO. 4545 STATE OF CALIFORNIA
01-31-10 Renewal Date
07-27-09 Date

The State of California or its officers or agents shall not be responsible for the accuracy or completeness of electronic copies of this plan sheet.

OCTA
550 SOUTH MAIN STREET
ORANGE, CA 92863

RBF CONSULTING
14725 ALTON PARKWAY
IRVINE, CA 92618

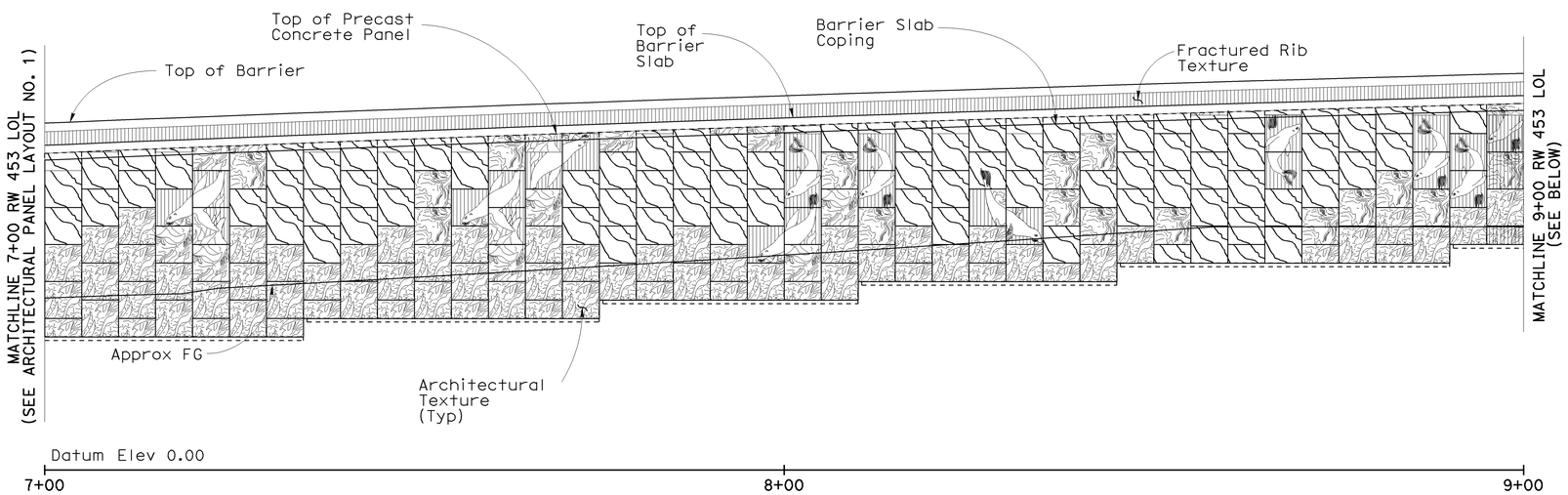

DEVELOPED ELEVATION (SEGMENT 4)

1" = 10'

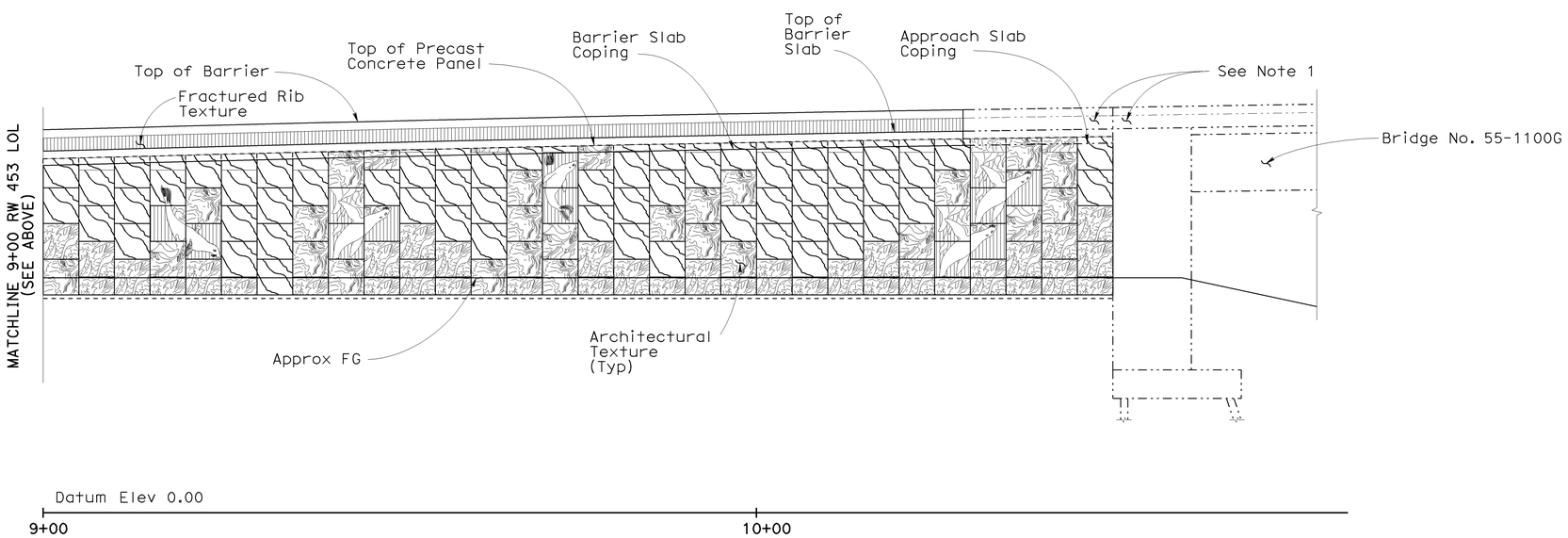

DEVELOPED ELEVATION (SEGMENT 5)

1" = 10'

NOTES

1. For Barrier Architectural Texture Not Shown, See "Structure Plans"

Sudhakar Vatti
DESIGN OVERSIGHT Sudhakar Vatti
8-10-09
SIGN OFF DATE

	BY	CHECKED
DESIGN	C. JOHNSON	A. SU
DETAILS	R. KELCHER	A. SU
QUANTITIES	A. PRILEY	J. WONG

PREPARED FOR THE STATE OF CALIFORNIA DEPARTMENT OF TRANSPORTATION

A. PRILEY
PROJECT ENGINEER

BRIDGE NO. 55E0104
POST MILE R0.6

RETAINING WALL NO. 453
ARCHITECTURAL PANEL LAYOUT NO. 2

DESIGN DETAIL SHEET (ENGLISH) (REV. 2/25/05)

ORIGINAL SCALE IN INCHES FOR REDUCED PLANS 0 1 2 3

CU 12235
EA 071631

DISREGARD PRINTS BEARING EARLIER REVISION DATES → 04/06/09 07/21/09

REVISION DATES (PRELIMINARY STAGE ONLY)

SHEET 14 OF 22

FILE => 55-e0104-s-arch02.dgn

USERNAME => trcarol DATE PLOTTED => 04-FEB-2010 TIME PLOTTED => 11:00

DIST	COUNTY	ROUTE	POST MILES TOTAL PROJECT	SHEET No	TOTAL SHEETS
12	Ora	22,405, 605	R0.3/R0.9, 22.3/24.0,3.0/R1.6	1859	1929

LICENSED LANDSCAPE ARCHITECT

2-1-10
PLANS APPROVAL DATE

LICENSED LANDSCAPE ARCHITECT
CATHY L. JOHNSON
NO. 4545
01-31-10
Renewal Date
07-27-09
Date
STATE OF CALIFORNIA

The State of California or its officers or agents shall not be responsible for the accuracy or completeness of electronic copies of this plan sheet.

OCTA
550 SOUTH MAIN STREET
ORANGE, CA 92863

RBF CONSULTING
14725 ALTON PARKWAY
IRVINE, CA 92618

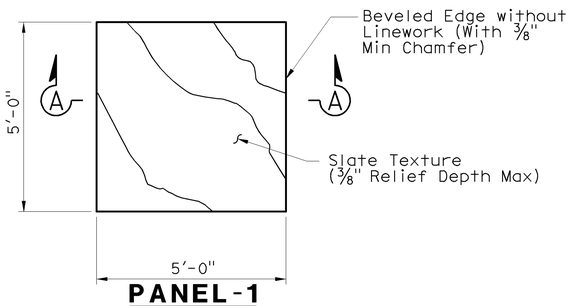

PANEL-1
1/2" = 1'-0"

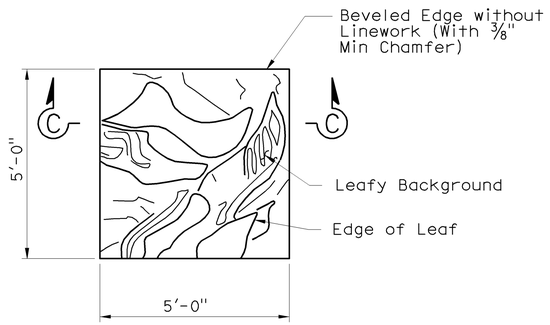

PANEL-3
1/2" = 1'-0"

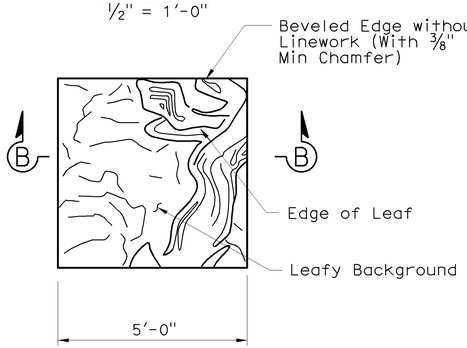

PANEL-2
1/2" = 1'-0"

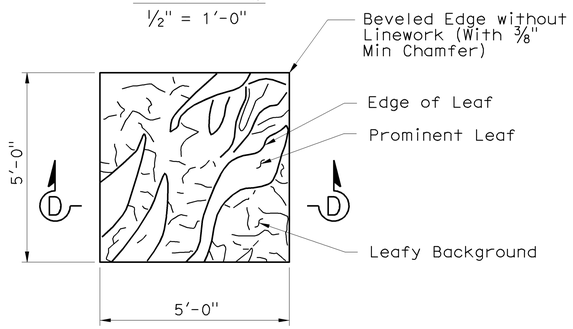

PANEL-4
1/2" = 1'-0"

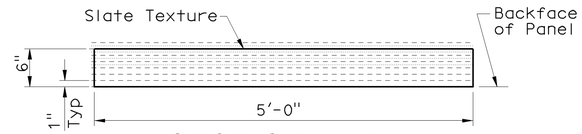

SECTION A-A
1" = 1'-0"

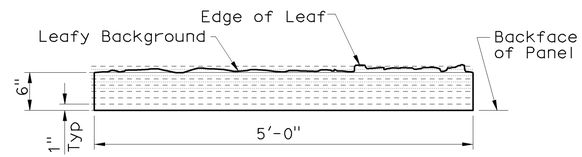

SECTION B-B
1" = 1'-0"

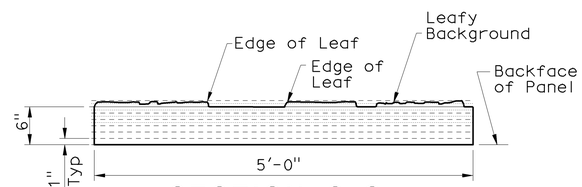

SECTION C-C
1" = 1'-0"

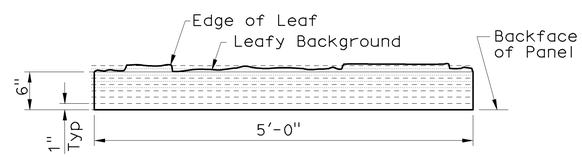

SECTION D-D
1" = 1'-0"

Sudhakar Vatti
DESIGN OVERSIGHT Sudhakar Vatti
8-10-09
SIGN OFF DATE

DESIGN DETAIL SHEET (ENGLISH) (REV. 2/25/05)

	BY	CHECKED
DESIGN	C. JOHNSON	A. SU
DETAILS	R. KELCHER	A. SU
QUANTITIES	A. PRILEY	J. WONG

ORIGINAL SCALE IN INCHES FOR REDUCED PLANS 0 1 2 3

PREPARED FOR THE STATE OF CALIFORNIA DEPARTMENT OF TRANSPORTATION

A. PRILEY
PROJECT ENGINEER

CU 12235
EA 071631

BRIDGE NO. 55E0104
POST MILE R0.6

RETAINING WALL NO. 453
ARCHITECTURAL DETAILS NO. 1

DISREGARD PRINTS BEARING EARLIER REVISION DATES

REVISION DATES (PRELIMINARY STAGE ONLY) 04/06/09 07/27/09

SHEET 15 OF 22

FILE => 55-e0104-s-arch03.dgn

USERNAME => rrcarol DATE PLOTTED => 04-FEB-2010 TIME PLOTTED => 11:00

DIST	COUNTY	ROUTE	POST MILES TOTAL PROJECT	SHEET No	TOTAL SHEETS
12	Ora	22,405, 605	R0.3/R0.9, 22.3/24.0,3.0/R1.6	1860	1929

LICENSED LANDSCAPE ARCHITECT

2-1-10
PLANS APPROVAL DATE

LICENSED LANDSCAPE ARCHITECT CATHY L. JOHNSON NO. 4545 01-31-10 Renewal Date 07-27-09 Date STATE OF CALIFORNIA

The State of California or its officers or agents shall not be responsible for the accuracy or completeness of electronic copies of this plan sheet.

OCTA
550 SOUTH MAIN STREET
ORANGE, CA 92863

RBF CONSULTING
14725 ALTON PARKWAY
IRVINE, CA 92618

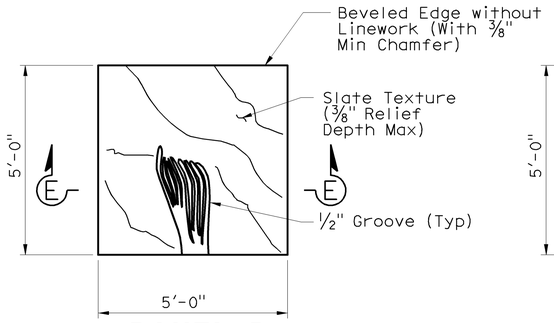

PANEL-5
1/2" = 1'-0"

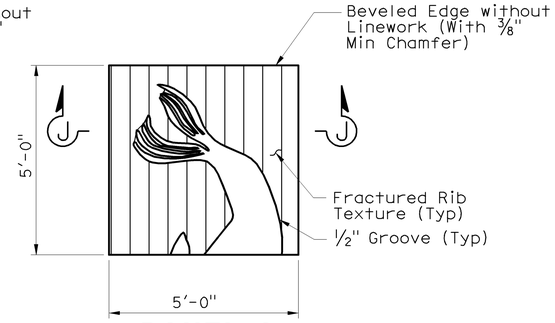

PANEL-9
1/2" = 1'-0"

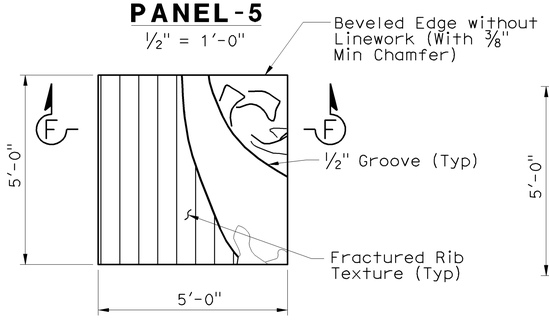

PANEL-6
1/2" = 1'-0"

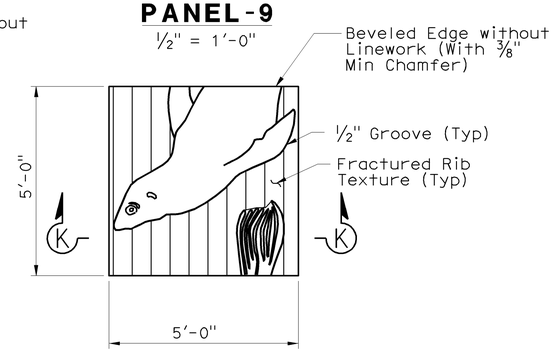

PANEL-10
1/2" = 1'-0"

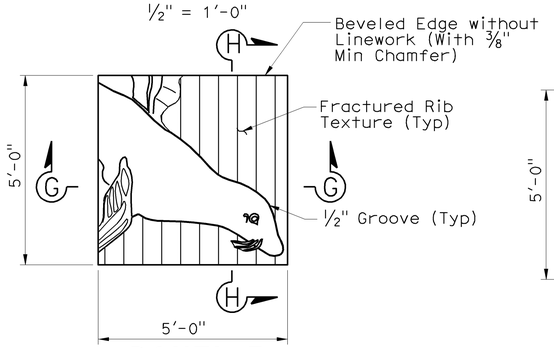

PANEL-7
1/2" = 1'-0"

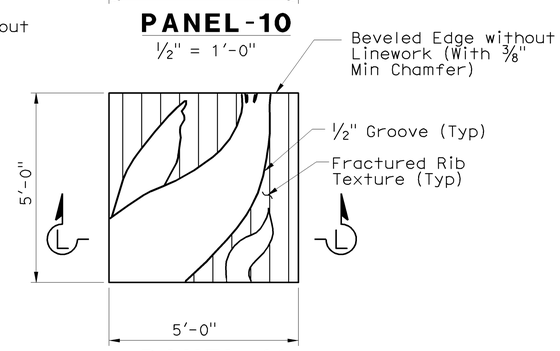

PANEL-11
1/2" = 1'-0"

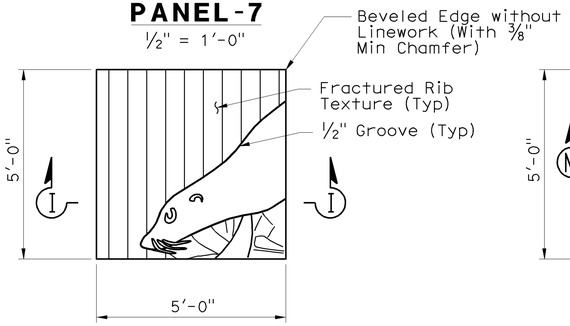

PANEL-8
1/2" = 1'-0"

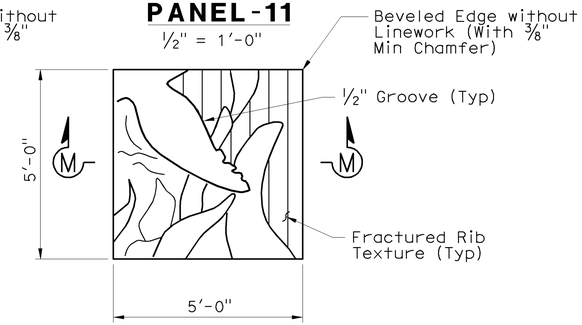

PANEL-12
1/2" = 1'-0"

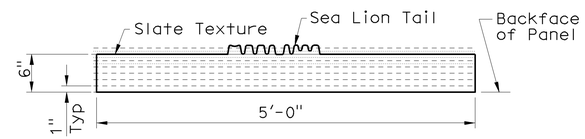

SECTION E-E
1" = 1'-0"

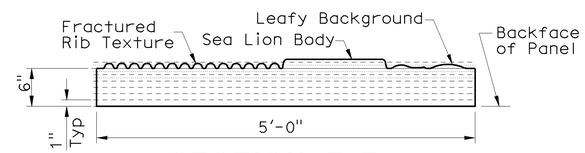

SECTION F-F
1" = 1'-0"

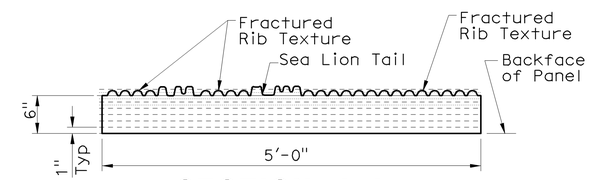

SECTION J-J
1" = 1'-0"

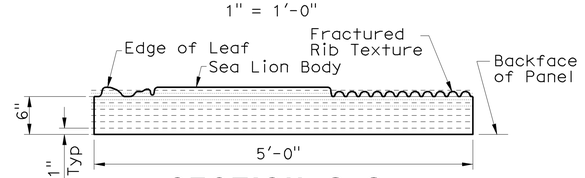

SECTION G-G
1" = 1'-0"

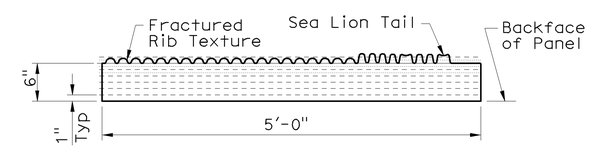

SECTION K-K
1" = 1'-0"

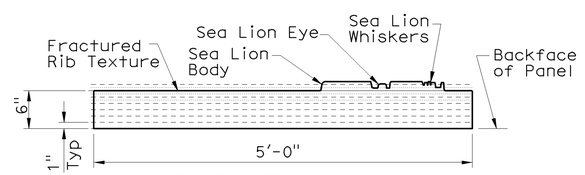

SECTION H-H
1" = 1'-0"

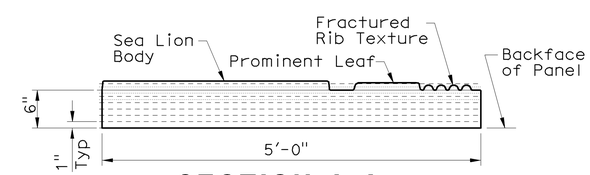

SECTION L-L
1" = 1'-0"

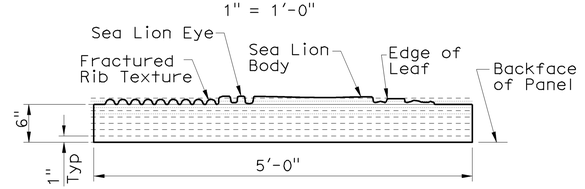

SECTION I-I
1" = 1'-0"

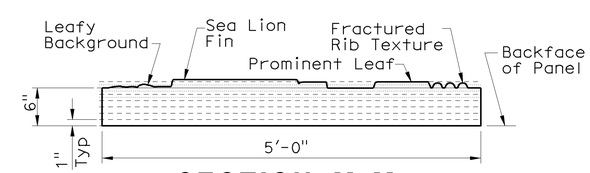

SECTION M-M
1" = 1'-0"

Sudhakar Vatti
DESIGN OVERSIGHT Sudhakar Vatti
8-10-09
SIGN OFF DATE

	BY	CHECKED
DESIGN	C. JOHNSON	A. SU
DETAILS	R. KELCHER	A. SU
QUANTITIES	A. PRILEY	J. WONG

PREPARED FOR THE STATE OF CALIFORNIA DEPARTMENT OF TRANSPORTATION

A. PRILEY
PROJECT ENGINEER

BRIDGE NO. 55E0104
POST MILE R0.6

RETAINING WALL NO. 453
ARCHITECTURAL DETAILS NO. 2

DESIGN DETAIL SHEET (ENGLISH) (REV. 2/25/05)

ORIGINAL SCALE IN INCHES FOR REDUCED PLANS 0 1 2 3

CU 12235
EA 071631

DISREGARD PRINTS BEARING EARLIER REVISION DATES

REVISION DATES (PRELIMINARY STAGE ONLY) 04/06/09 07/27/09

SHEET 16 OF 22

FILE => 55-e0104-s-arch04.dgn

USERNAME => rrcarol DATE PLOTTED => 04-FEB-2010 TIME PLOTTED => 11:00

DIST	COUNTY	ROUTE	POST MILES TOTAL PROJECT	SHEET No	TOTAL SHEETS
12	Ora	22,405, 605	R0.3/R0.9, 22.3/24.0,3.0/R1.6	1861	1929

LICENSED LANDSCAPE ARCHITECT

2-1-10
PLANS APPROVAL DATE

LICENSED LANDSCAPE ARCHITECT
CATHY L. JOHNSON
NO. 4545
01-31-10
Renewal Date
07-27-09
Date
STATE OF CALIFORNIA

The State of California or its officers or agents shall not be responsible for the accuracy or completeness of electronic copies of this plan sheet.

OCTA
550 SOUTH MAIN STREET
ORANGE, CA 92863

RBF CONSULTING
14725 ALTON PARKWAY
IRVINE, CA 92618

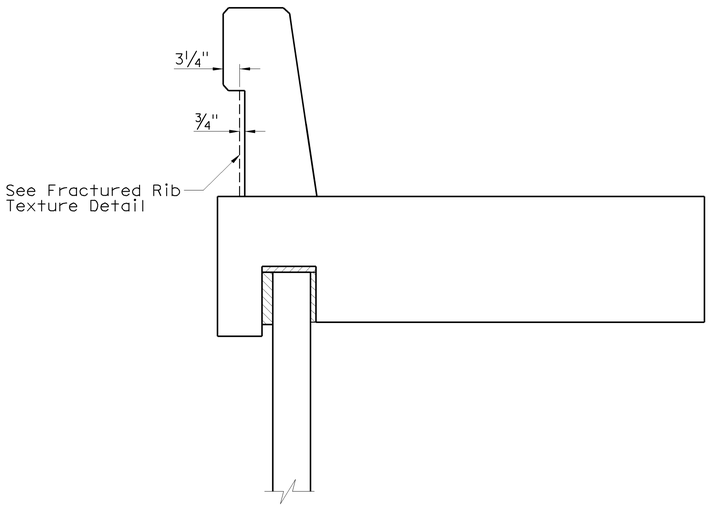

CONCRETE BARRIER (TYPE 736 MOD)

No Scale

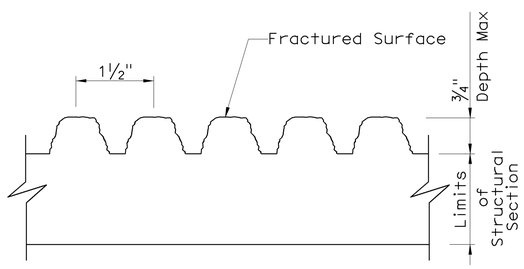

FRACTURED RIB TEXTURE

No Scale

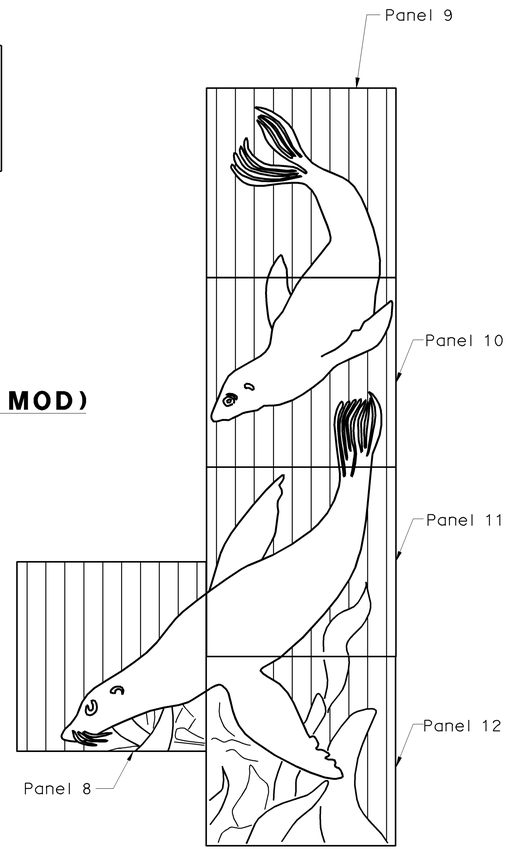

ELEVATION A

No Scale

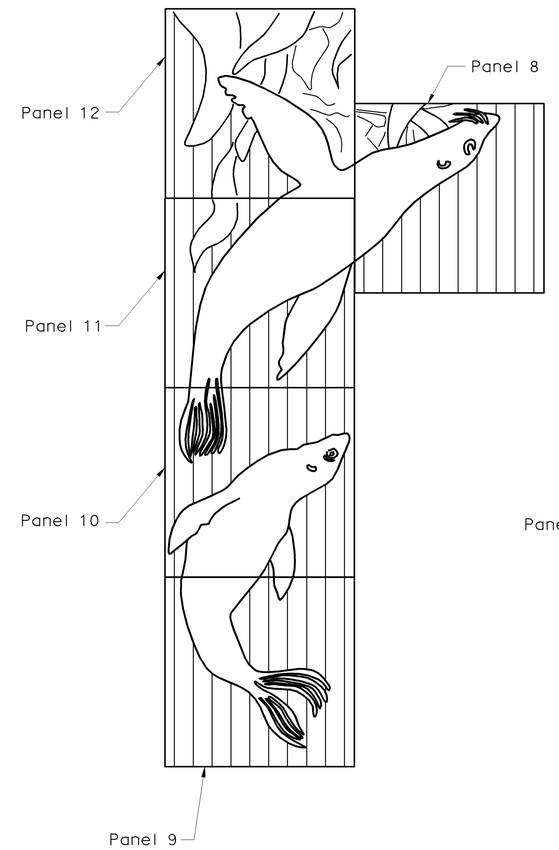

ELEVATION B

No Scale

Note: Rotate "Elevation A" 180°

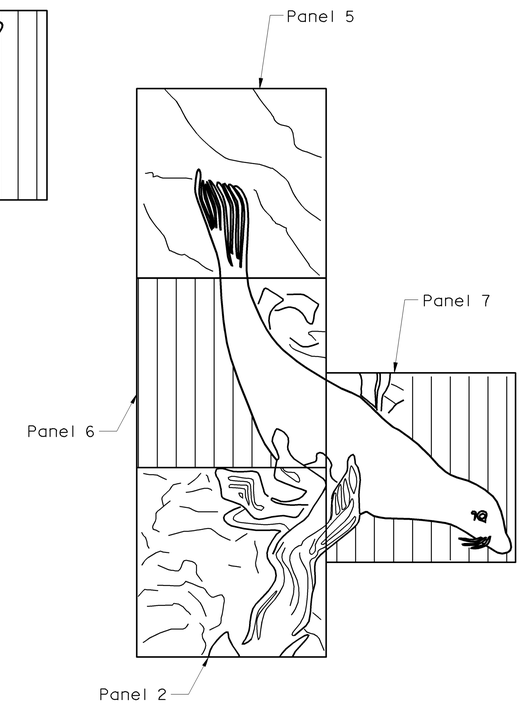

ELEVATION C

No Scale

Sudhakar Vatti
DESIGN OVERSIGHT
Sudhakar Vatti
8-10-09
SIGN OFF DATE

	BY	CHECKED
DESIGN	C. JOHNSON	A. SU
DETAILS	R. KELCHER	A. SU
QUANTITIES	A. PRILEY	J. WONG

PREPARED FOR THE
STATE OF CALIFORNIA
DEPARTMENT OF TRANSPORTATION

A. PRILEY
PROJECT ENGINEER

BRIDGE NO. 55E0104
POST MILE R0.6

RETAINING WALL NO. 453
ARCHITECTURAL DETAILS NO. 3

DESIGN DETAIL SHEET (ENGLISH) (REV. 2/25/05)

ORIGINAL SCALE IN INCHES FOR REDUCED PLANS 0 1 2 3

CU 12235
EA 071631

DISREGARD PRINTS BEARING EARLIER REVISION DATES

REVISION DATES (PRELIMINARY STAGE ONLY) 04/06/09 07/27/09

SHEET 17 OF 22

FILE => 55-e0104-s-arch05.dgn

USERNAME => trcarol DATE PLOTTED => 04-FEB-2010 TIME PLOTTED => 11:00

REFERENCE: CALTRANS SOIL & ROCK LOGGING, CLASSIFICATION, AND PRESENTATION MANUAL (JUNE 2007)

DIST	COUNTY	ROUTE	POST MILES TOTAL PROJECT	SHEET No	TOTAL SHEETS
12	Ora	22,405, 605	R0.3/R0.9, 22.3/24.0,3.0/R1.6	1862	1929

REGISTERED CIVIL ENGINEER 07/27/09 DATE

2-1-10
PLANS APPROVAL DATE

REGISTERED PROFESSIONAL ENGINEER K.Arulmoli No. GE 2090 Exp.12-31-09 GEOTECHNICAL STATE OF CALIFORNIA

The State of California or its officers or agents shall not be responsible for the accuracy or completeness of electronic copies of this plan sheet.

OCTA
550 SOUTH MAIN STREET
ORANGE, CA 92863

EARTH MECHANICS, INC.
17660, NEWHOPE STREET, SUITE E
FOUNTAIN VALLEY, CA 92708

CEMENTATION

Description	Criteria
Weak	Crumbles or breaks with handling or little finger pressure.
Moderate	Crumbles or breaks with considerable finger pressure.
Strong	Will not crumble or break with finger pressure.

CONSISTENCY OF COHESIVE SOILS

Description	Unconfined Compressive Strength (tsf)	Pocket Penetrometer Measurement (tsf)	Torvane Measurement (tsf)	Field Approximation
Very Soft	< 0.25	< 0.25	< 0.12	Easily penetrated several inches by fist
Soft	0.25 to 0.50	0.25 to 0.50	0.12 to 0.25	Easily penetrated several inches by thumb
Medium Stiff	0.50 to 1.0	0.50 to 1.0	0.25 to 0.50	Penetrated several inches by thumb with moderate effort
Stiff	1 to 2	1 to 2	0.50 to 1.0	Readily indented by thumb but penetrated only with great effort
Very Stiff	2 to 4	2 to 4	1.0 to 2.0	Readily indented by thumbnail
Hard	> 4.0	> 4.0	> 2.0	Indented by thumbnail with difficulty

BOREHOLE IDENTIFICATION

Symbol	Hole Type	Description
Size	A	Auger Boring
Size	R P	Rotary drilled boring Rotary percussion boring (air)
Size	R	Rotary drilled diamond core
Size	HD HA	Hand driven (1-inch soil tube) Hand Auger
●	D	Dynamic Cone Penetration Boring
▲	CPT	Cone Penetration Test (ASTM D 5778-95)
□	O	Other

Note: Size in inches.

PLASTICITY OF FINE-GRAINED SOILS

Description	Criteria
Nonplastic	A 1/8-inch thread cannot be rolled at any water content.
Low	The thread can barely be rolled and the lump cannot be formed when drier than the plastic limit.
Medium	The thread is easy to roll and not much time is required to reach the plastic limit. The thread cannot be rerolled after reaching the plastic limit. The lump crumbles when drier than the plastic limit.
High	It takes considerable time rolling and kneading to reach the plastic limit. The thread can be rerolled several times after reaching the plastic limit. The lump can be formed without crumbling when drier than the plastic limit.

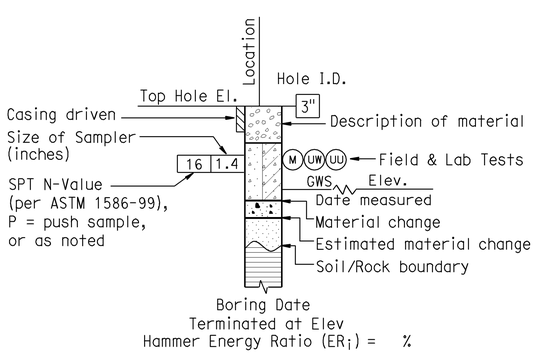

ROTARY BORING

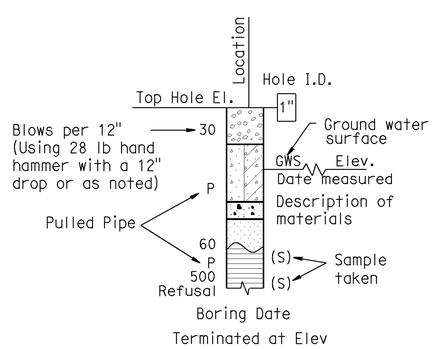

HAND BORING

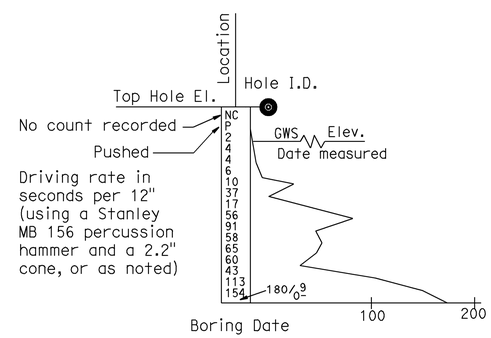

DYNAMIC CONE PENETRATION BORING

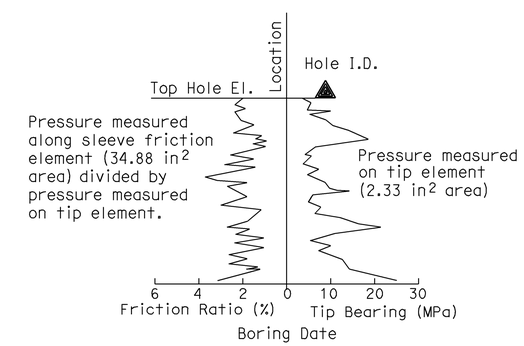

CONE PENETRATION TEST (CPT) SOUNDING

Sudhakar Vatti
DESIGN OVERSIGHT Sudhakar Vatti

8-10-09
SIGN OFF DATE

DRAWN BY: J.Fang
CHECKED BY: G.J.Gunaranjan

FIELD INVESTIGATION BY:
R.Jie

PREPARED FOR THE STATE OF CALIFORNIA DEPARTMENT OF TRANSPORTATION

K.Arulmoli
PROJECT ENGINEER

BRIDGE NO. 55E0104
POST MILE R0.6

RETAINING WALL NO 453
LOG OF TEST BORINGS NO. 1

OSF CIVIL LOG OF TEST BORINGS SHEET (ENGLISH) (REV. 2-25-05)

ORIGINAL SCALE IN INCHES FOR REDUCED PLANS 0 1 2 3

CU 12235
EA 071631

DISREGARD PRINTS BEARING EARLIER REVISION DATES

REVISION DATES (PRELIMINARY STAGE ONLY) 03/23/09 04/06/09 07/27/09

SHEET 18 OF 22

FILE => 55-e0104-z-ltb01.dgn

USERNAME => ttcarol DATE PLOTTED => 04-FEB-2010 TIME PLOTTED => 11:00

REFERENCE: CALTRANS SOIL & ROCK LOGGING, CLASSIFICATION, AND PRESENTATION MANUAL (JUNE 2007)

GROUP SYMBOLS AND NAMES

Graphic/Symbol	Group Names
GW	Well-graded GRAVEL Well-graded GRAVEL with SAND
GP	Poorly graded GRAVEL Poorly graded GRAVEL with SAND
GW-GM	Well-graded GRAVEL with SILT Well-graded GRAVEL with SILT and SAND
GW-GC	Well-graded GRAVEL with CLAY (or SILTY CLAY) Well-graded GRAVEL with CLAY and SAND (or SILTY CLAY and SAND)
GP-GM	Poorly graded GRAVEL with SILT Poorly graded GRAVEL with SILT and SAND
GP-GC	Poorly graded GRAVEL with CLAY (or SILTY CLAY) Poorly graded GRAVEL with CLAY and SAND (or SILTY CLAY and SAND)
GM	SILTY GRAVEL SILTY GRAVEL with SAND
GC	CLAYEY GRAVEL CLAYEY GRAVEL with SAND
GC-GM	SILTY, CLAYEY GRAVEL SILTY, CLAYEY GRAVEL with SAND
SW	Well-graded SAND Well-graded SAND with GRAVEL
SP	Poorly graded SAND Poorly graded SAND with GRAVEL
SW-SM	Well-graded SAND with SILT Well-graded SAND with SILT and GRAVEL
SW-SC	Well-graded SAND with CLAY (or SILTY CLAY) Well-graded SAND with CLAY and GRAVEL (or SILTY CLAY and GRAVEL)
SP-SM	Poorly graded SAND with SILT Poorly graded SAND with SILT and GRAVEL
SP-SC	Poorly graded SAND with CLAY (or SILTY CLAY) Poorly graded SAND with CLAY and GRAVEL (or SILTY CLAY and GRAVEL)
SM	SILTY SAND SILTY SAND with GRAVEL
SC	CLAYEY SAND CLAYEY SAND with GRAVEL
SC-SM	SILTY, CLAYEY SAND SILTY, CLAYEY SAND with GRAVEL
PT	PEAT
	COBBLES COBBLES and BOULDERS BOULDERS

Graphic/Symbol	Group Names
CL	Lean CLAY Lean CLAY with SAND Lean CLAY with GRAVEL SANDY lean CLAY SANDY lean CLAY with GRAVEL GRAVELLY lean CLAY GRAVELLY lean CLAY with SAND
CL-ML	SILTY CLAY SILTY CLAY with SAND SILTY CLAY with GRAVEL SANDY SILTY CLAY SANDY SILTY CLAY with GRAVEL GRAVELLY SILTY CLAY GRAVELLY SILTY CLAY with SAND
ML	SILT SILT with SAND SILT with GRAVEL SANDY SILT SANDY SILT with GRAVEL GRAVELLY SILT GRAVELLY SILT with SAND
OL	ORGANIC lean CLAY ORGANIC lean CLAY with SAND ORGANIC lean CLAY with GRAVEL SANDY ORGANIC lean CLAY SANDY ORGANIC lean CLAY with GRAVEL GRAVELLY ORGANIC lean CLAY GRAVELLY ORGANIC lean CLAY with SAND
OL	ORGANIC SILT ORGANIC SILT with SAND ORGANIC SILT with GRAVEL SANDY ORGANIC SILT SANDY ORGANIC SILT with GRAVEL GRAVELLY ORGANIC SILT GRAVELLY ORGANIC SILT with SAND
CH	Fat CLAY Fat CLAY with SAND Fat CLAY with GRAVEL SANDY fat CLAY SANDY fat CLAY with GRAVEL GRAVELLY fat CLAY GRAVELLY fat CLAY with SAND
MH	Elastic SILT Elastic SILT with SAND Elastic SILT with GRAVEL SANDY elastic SILT SANDY elastic SILT with GRAVEL GRAVELLY elastic SILT GRAVELLY elastic SILT with SAND
OH	ORGANIC fat CLAY ORGANIC fat CLAY with SAND ORGANIC fat CLAY with GRAVEL SANDY ORGANIC fat CLAY SANDY ORGANIC fat CLAY with GRAVEL GRAVELLY ORGANIC fat CLAY GRAVELLY ORGANIC fat CLAY with SAND
OH	ORGANIC elastic SILT ORGANIC elastic SILT with SAND ORGANIC elastic SILT with GRAVEL SANDY ORGANIC elastic SILT SANDY ORGANIC elastic SILT with GRAVEL GRAVELLY ORGANIC elastic SILT GRAVELLY ORGANIC elastic SILT with SAND
OL/OH	ORGANIC SOIL ORGANIC SOIL with SAND ORGANIC SOIL with GRAVEL SANDY ORGANIC SOIL SANDY ORGANIC SOIL with GRAVEL GRAVELLY ORGANIC SOIL GRAVELLY ORGANIC SOIL with SAND

FIELD AND LABORATORY TESTING

- (C) Consolidation (ASTM D 2435)
- (CL) Collapse Potential (ASTM D 5333)
- (CP) Compaction Curve (CTM 216)
- (CR) Corrosivity Testing (CTM 643, CTM 422, CTM 417)
- (CU) Consolidated Undrained Triaxial (ASTM D 4767)
- (DS) Direct Shear (ASTM D 3080)
- (EI) Expansion Index (ASTM D 4829)
- (M) Moisture Content (ASTM D 2216)
- (OC) Organic Content-% (ASTM D 2974)
- (P) Permeability (CTM 220)
- (PA) Particle Size Analysis (ASTM D 422)
- (PI) Plasticity Index (AASHTO T 90) Liquid Limit (AASHTO T 89)
- (PL) Point Load Index (ASTM D 5731)
- (PM) Pressure Meter
- (PP) Pocket Penetrometer
- (R) R-Value (CTM 301)
- (SE) Sand Equivalent (CTM 217)
- (SG) Specific Gravity (AASHTO T 100)
- (SL) Shrinkage Limit (ASTM D 427)
- (SW) Swell Potential (ASTM D 4546)
- (TV) Pocket Torvane
- (UC) Unconfined Compression-Soil (ASTM D 2166) Unconfined Compression-Rock (ASTM D 2938)
- (UU) Unconsolidated Undrained Triaxial (ASTM D 2850)
- (UW) Unit Weight (ASTM D 4767)
- (VS) Vane Shear (AASHTO T 223)

DIST	COUNTY	ROUTE	POST MILES TOTAL PROJECT	SHEET No	TOTAL SHEETS
12	Ora	22,405, 605	R0.3/R0.9, 22.3/24.0,3.0/R1.6	1863	1929

07/27/09
REGISTERED CIVIL ENGINEER DATE

2-1-10
PLANS APPROVAL DATE

REGISTERED PROFESSIONAL ENGINEER K.Arulmoli No. GE 2090 Exp.12-31-09 GEOTECHNICAL STATE OF CALIFORNIA

The State of California or its officers or agents shall not be responsible for the accuracy or completeness of electronic copies of this plan sheet.

OCTA
550 SOUTH MAIN STREET
ORANGE, CA 92863

EARTH MECHANICS, INC.
17660, NEWHOPE STREET, SUITE E
FOUNTAIN VALLEY, CA 92708

APPARENT DENSITY OF COHESIONLESS SOILS

Description	SPT N_{60} (Blows / 12 inches)
Very loose	0 - 4
Loose	5 - 10
Medium Dense	11 - 30
Dense	31 - 50
Very Dense	> 50

MOISTURE

Description	Criteria
Dry	Absence of moisture, dusty, dry to the touch
Moist	Damp but no visible water
Wet	Visible free water, usually soil is below water table

PERCENT OR PROPORTION OF SOILS

Description	Criteria
Trace	Particles are present but estimated to be less than 5%
Few	5 to 10%
Little	15 to 25%
Some	30 to 45%
Mostly	50 to 100%

PARTICLE SIZE

Description		Size
Boulder		> 12"
Cobble		3" to 12"
Gravel	Coarse	3/4" to 3"
	Fine	No. 4 to 3/4"
Sand	Coarse	No. 10 to No. 4
	Medium	No. 40 to No. 10
	Fine	No. 200 to No. 40

Sudhakar Vatti
DESIGN OVERSIGHT Sudhakar Vatti
8-10-09
SIGN OFF DATE

DRAWN BY: J.Fang
CHECKED BY: G.J.Gunaranjan

FIELD INVESTIGATION BY:
R.Jie

PREPARED FOR THE STATE OF CALIFORNIA DEPARTMENT OF TRANSPORTATION

K.Arulmoli
PROJECT ENGINEER

BRIDGE NO. 55E0104
POST MILE R0.6

RETAINING WALL NO 453
LOG OF TEST BORINGS NO. 2

OSF CIVIL LOG OF TEST BORINGS SHEET (ENGLISH) (REV. 2-25-05)

ORIGINAL SCALE IN INCHES FOR REDUCED PLANS 0 1 2 3

CU 12235
EA 071631

DISREGARD PRINTS BEARING EARLIER REVISION DATES

REVISION DATES (PRELIMINARY STAGE ONLY) 03/25/09 04/06/09 07/27/09

SHEET 19 OF 22

FILE => 55-e0104-z-ltb02.dgn

USERNAME => trcarol DATE PLOTTED => 04-FEB-2010 TIME PLOTTED => 11:00

DIST	COUNTY	ROUTE	POST MILES TOTAL PROJECT	SHEET No	TOTAL SHEETS
12	Ora	22,405, 605	R0.3/R0.9, 22.3/24.0,3.0/R1.6	1864	1929

REGISTERED CIVIL ENGINEER — DATE 07/27/09

2-1-10
PLANS APPROVAL DATE

REGISTERED PROFESSIONAL ENGINEER — K.Arulmoli — No. GE 2090 — Exp. 12-31-09 — GEOTECHNICAL — STATE OF CALIFORNIA

The State of California or its officers or agents shall not be responsible for the accuracy or completeness of electronic copies of this plan sheet.

OCTA
550 SOUTH MAIN STREET
ORANGE, CA 92863

EARTH MECHANICS, INC.
17660, NEWHOPE STREET, SUITE E
FOUNTAIN VALLEY, CA 92708

BENCHMARKS:

Monument: 1A-144-04

Described by OCS 2005 - Found 3.75" OCS aluminum benchmark disk stamped "1A-144-04", set in the southwesterly corner of a 4.4 ft by 4.4 ft concrete catch basin. Monument is located in the northeasterly corner of the intersection of Seal Beach Boulevard and St. Cloud Drive, 44 ft easterly of the centerline of Seal Beach Boulevard and 58 ft northerly of the centerline of St. Cloud Dr. Monument is set level with the sidewalk.

Elevation: 15.37 feet

NOTES:

(1) This LOTB sheet (Boring Record) was prepared in accordance with the Caltrans Soil and Rock Classification Logging, Classification and Presentation Manual (June 2007).

(2) 2.4" samples were taken using a California Modified Sampler.

(3) An automatic trip hammer system consisting of a hammer weight of 140 lbs falling a distance of 30" was used to advance the drive sampler.

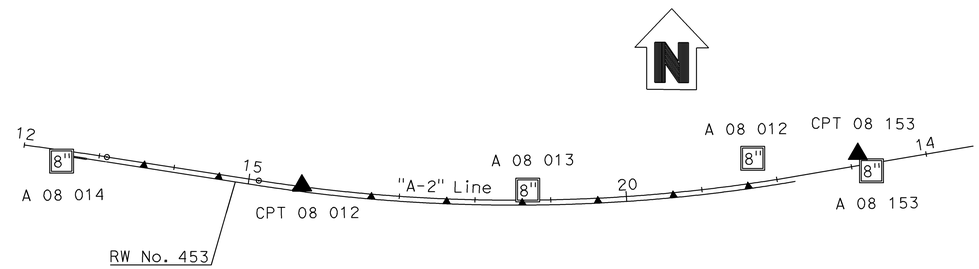

PLAN

1" = 100'

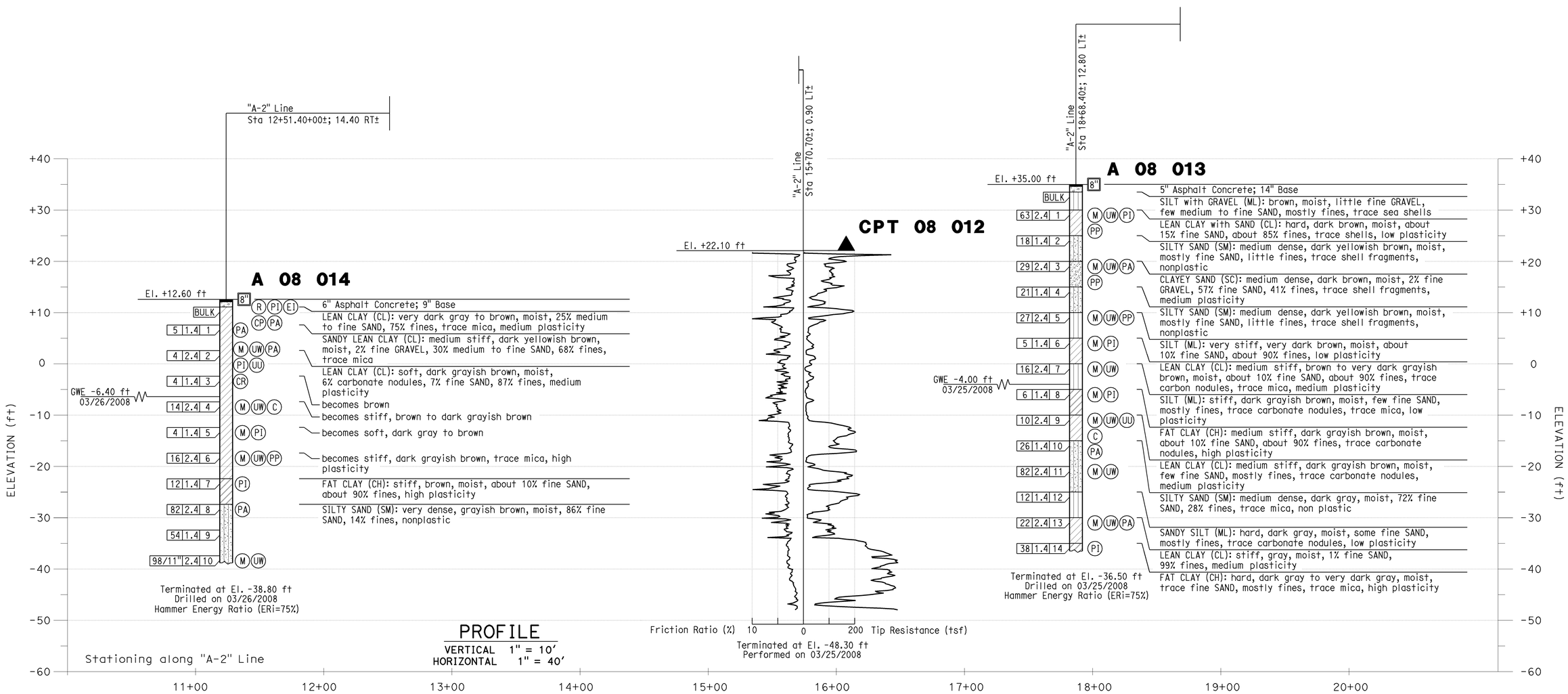

PROFILE

VERTICAL 1" = 10'
HORIZONTAL 1" = 40'

Sudhakar Vatti
DESIGN OVERSIGHT Sudhakar Vatti
8-10-09
SIGN OFF DATE

DRAWN BY: J.Fang
CHECKED BY: G.J.Gunaranjan

FIELD INVESTIGATION BY:
R.Jie

PREPARED FOR THE STATE OF CALIFORNIA DEPARTMENT OF TRANSPORTATION

K.Arulmoli
PROJECT ENGINEER

BRIDGE NO. 55E0104
POST MILE R0.6

RETAINING WALL NO 453
LOG OF TEST BORINGS NO. 3

OSF CIVIL LOG OF TEST BORINGS SHEET (ENGLISH) (REV. 2-25-05)

ORIGINAL SCALE IN INCHES FOR REDUCED PLANS 0 1 2 3

CU 12235
EA 071631

DISREGARD PRINTS BEARING EARLIER REVISION DATES

REVISION DATES (PRELIMINARY STAGE ONLY) 03/23/09 04/06/09 07/27/09

SHEET 20 OF 22

FILE => 55-e0104-z-ltb03.dgn

USERNAME => trcarol DATE PLOTTED => 04-FEB-2010 TIME PLOTTED => 11:00

DIST	COUNTY	ROUTE	POST MILES TOTAL PROJECT	SHEET No	TOTAL SHEETS
12	Ora	22,405, 605	R0.3/R0.9, 22.3/24.0,3.0/R1.6	1865	1929

REGISTERED CIVIL ENGINEER 07/27/09 DATE

2-1-10
PLANS APPROVAL DATE

REGISTERED PROFESSIONAL ENGINEER K.Arulmoli No. GE 2090 Exp.12-31-09 GEOTECHNICAL STATE OF CALIFORNIA

The State of California or its officers or agents shall not be responsible for the accuracy or completeness of electronic copies of this plan sheet.

OCTA
550 SOUTH MAIN STREET
ORANGE, CA 92863

EARTH MECHANICS, INC.
17660, NEWHOPE STREET, SUITE E
FOUNTAIN VALLEY, CA 92708

BENCHMARKS:

Monument: 1A-144-04

Described by OCS 2005 - Found 3.75" OCS aluminum benchmark disk stamped "1A-144-04", set in the southwesterly corner of a 4.4 ft by 4.4 ft concrete catch basin. Monument is located in the northeasterly corner of the intersection of Seal Beach Boulevard and St. Cloud Drive, 44 ft easterly of the centerline of Seal Beach Boulevard and 58 ft northerly of the centerline of St. Cloud Dr. Monument is set level with the sidewalk.

Elevation: 15.37 feet

NOTES:

(1) This LOTB sheet (Boring Record) was prepared in accordance with the Caltrans Soil and Rock Classification Logging, Classification and Presentation Manual (June 2007).

(2) 2.4" samples were taken using a California Modified Sampler.

(3) An automatic trip hammer system consisting of a hammer weight of 140 lbs falling a distance of 30" was used to advance the drive sampler.

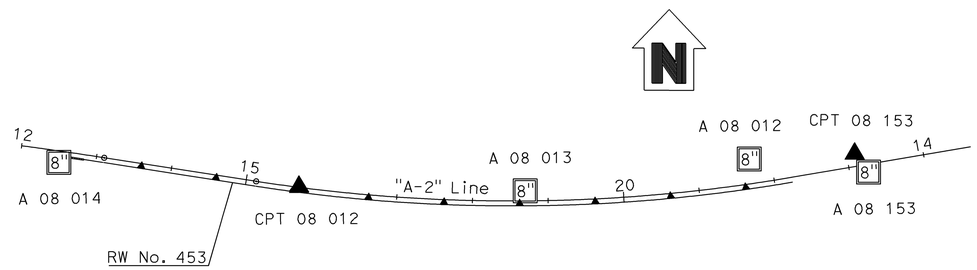

PLAN

1" = 100'

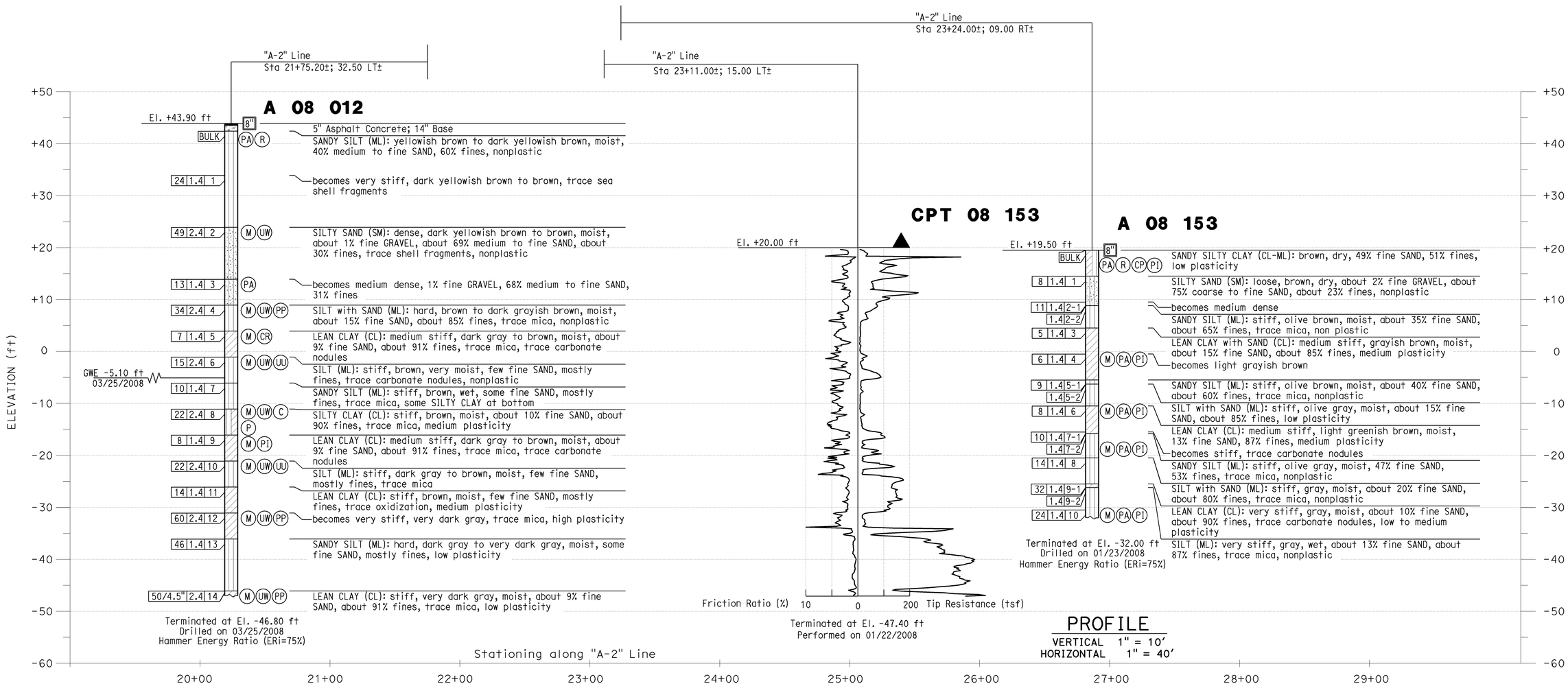

PROFILE

VERTICAL 1" = 10'
HORIZONTAL 1" = 40'

Sudhakar Vatti
DESIGN OVERSIGHT Sudhakar Vatti

8-10-09
SIGN OFF DATE

DRAWN BY: J.Fang
CHECKED BY: G.J.Gunaranjan

FIELD INVESTIGATION BY:
R.Jie

PREPARED FOR THE STATE OF CALIFORNIA DEPARTMENT OF TRANSPORTATION

K.Arulmoli
PROJECT ENGINEER

BRIDGE NO. 55E0104
POST MILE R0.6

RETAINING WALL NO 453

LOG OF TEST BORINGS NO. 4

OSF CIVIL LOG OF TEST BORINGS SHEET (ENGLISH) (REV. 2-25-05)

ORIGINAL SCALE IN INCHES FOR REDUCED PLANS 0 1 2 3

CU 12235
EA 071631

DISREGARD PRINTS BEARING EARLIER REVISION DATES

REVISION DATES (PRELIMINARY STAGE ONLY) 03/25/09 04/06/09 07/27/09

SHEET 21 OF 22

FILE => 55-e0104-z-lttb04.dgn

USERNAME => rtrcarol DATE PLOTTED => 04-FEB-2010 TIME PLOTTED => 11:00

FED. ROAD DIV. No.	STATE	PROJ. No.	FISCAL YEAR	SHEET No.	TOTAL SHEETS
7	CAL.			368	372

DIST.	COUNTY	ROUTE	SECTION	SHEET No.	TOTAL SHEETS
VII	Ora	22/405	A	12	12

RAMON GRIGNESS — CHIEF ENGINEER — GEOTECHNICAL SERVICES

DATE APPROVED April 8 '3

Bench Mark "200-A-59"
Rd. C.S. T&W 41' Rt. of Rte. 179
Sta. 200+59.47 B.C. Ult. & Const.
Elev. 14.96

REGISTERED PROFESSIONAL ENGINEER
K. Arulmoli
No. GE 2090
Exp. 12-31-09
GEOTECHNICAL
STATE OF CALIFORNIA

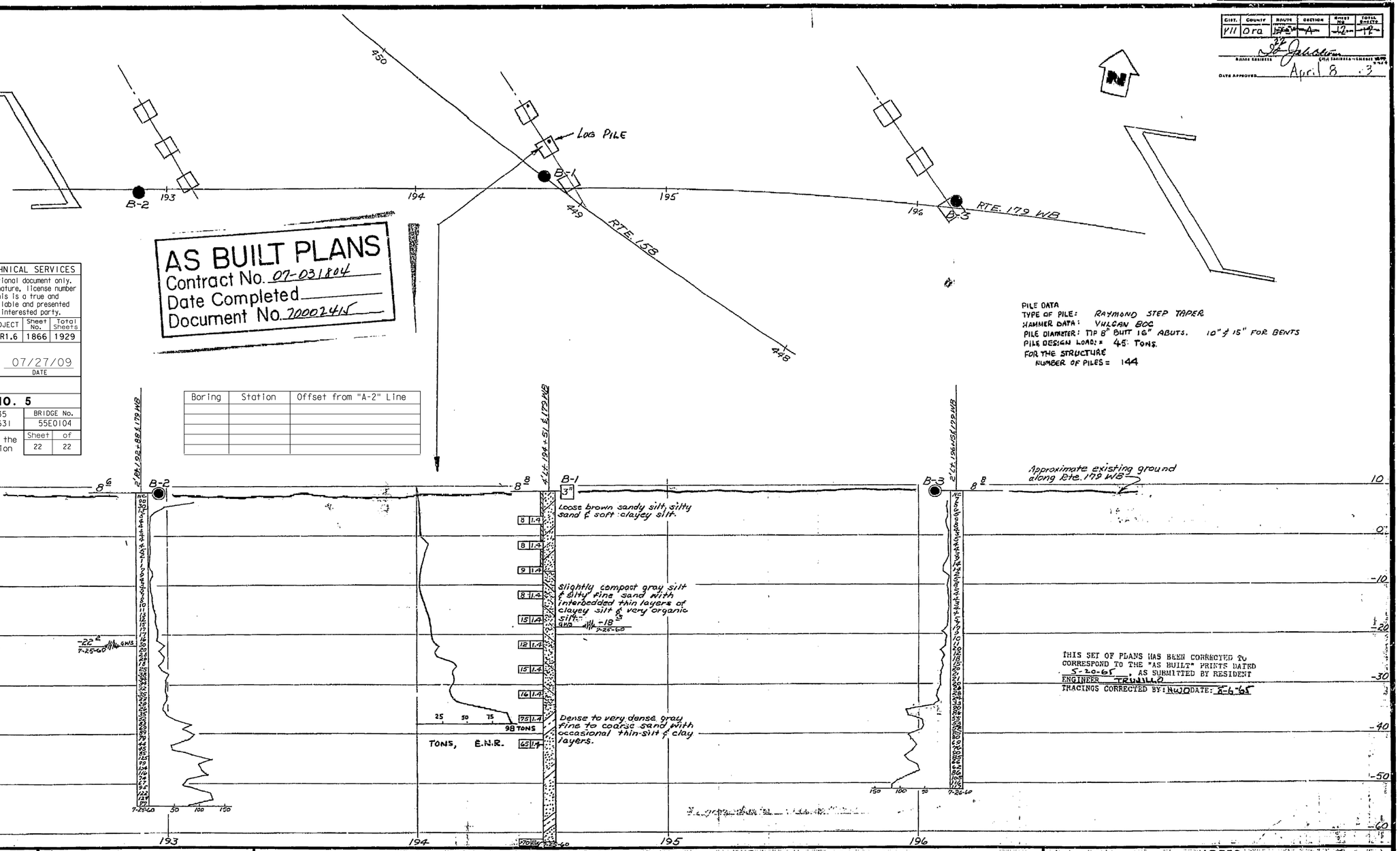

AS BUILT PLANS
Contract No. 07-031804
Date Completed
Document No. 70002415

PILE DATA
TYPE OF PILE: RAYMOND STEP TAPER
HAMMER DATA: VULCAN 80C
PILE DIAMETER: TIP 8" BUTT 16" ABUTS. 10" & 15" FOR BENTS
PILE DESIGN LOAD: = 45 TONS.
FOR THE STRUCTURE
NUMBER OF PILES = 144

THIS SET OF PLANS HAS BEEN CORRECTED TO CORRESPOND TO THE "AS BUILT" PRINTS DATED 5-10-65, AS SUBMITTED BY RESIDENT ENGINEER TRUJILLO.
TRACINGS CORRECTED BY: NWJ DATE: 8-6-65

BRIDGE DEPARTMENT

FIELD STUDY	
DRAWN	M.Sadri 7-26-60
CHECKED	M.Sadri 8-4-60
	M.R. Fernandez 8-17-60

Approval Recommended by: Chief, Bridge Foundation Engineering Section

DIVISION OF ENGINEERING SERVICES - GEOTECHNICAL SERVICES

As-Built Log of Test Borings sheet is considered an informational document only. As such, the State of California registration seal with signature, license number and registration certificate expiration date confirm that this is a true and accurate copy of the original document. This drawing is available and presented only for the convenience of any bidder, contractor or other interested party.

DIST.	COUNTY	ROUTE	KILOMETER POST-TOTAL PROJECT	Sheet No.	Total Sheets
12	Ora	22, 405, 605	R0.3/R0.9, 22.3/24.0, 3.0/R1.6	1866	1929

REGISTERED CIVIL ENGINEER — DATE 07/27/09

LOG OF TEST BORINGS NO. 5

NOTE: A COPY OF THIS LOG OF TEST BORINGS IS AVAILABLE AT OFFICE OF STRUCTURE MAINTENANCE AND INVESTIGATIONS, SACRAMENTO, CALIFORNIA

CU: 12235
EA: 071631

BRIDGE No. 55E0104

Sheet 22 of 22

Revisions made to this Log of Test Borings from the original 1965 Log of Test Borings are the addition of the following table and notes:

To accompany plans dated 2-1-10

Boring	Station	Offset from "A-2" Line

CLASSIFICATION OF MATERIAL BASED ON STANDARD GRADE SIZE LIMITS

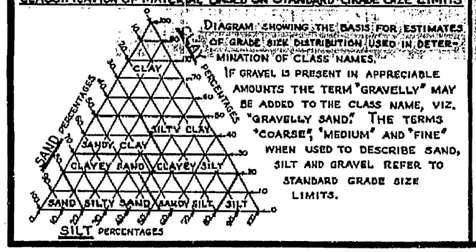

DIAGRAM SHOWING THE BASIS FOR ESTIMATES OF GRADE SIZE DISTRIBUTION USED IN DETERMINATION OF CLASS NAMES.

IF GRAVEL IS PRESENT IN APPRECIABLE AMOUNTS THE TERM "GRAVELLY" MAY BE ADDED TO THE CLASS NAME, VIZ. "GRAVELLY SAND." THE TERMS "COARSE", "MEDIUM" AND "FINE" WHEN USED TO DESCRIBE SAND, SILT AND GRAVEL REFER TO STANDARD GRADE SIZE LIMITS.

LEGEND OF EARTH MATERIALS

- GRAVEL
- SAND
- SILT
- CLAY
- SANDY CLAY OR CLAYEY SAND
- SANDY SILT OR SILTY SAND
- SILTY CLAY OR CLAYEY SILT
- PEAT AND/OR ORGANIC MATTER
- FILL MATERIAL
- IGNEOUS ROCK
- SEDIMENTARY ROCK
- METAMORPHIC ROCK

LEGEND OF BORING OPERATIONS

- PLAN OF ANY BORING
- PENETROMETER
- 2¼" CONE PENETROMETER
- SAMPLER BORING (DRY)
- ROTARY BORING (WET)
- AUGER BORING (DRY)
- JET BORING
- CORE BORING
- TEST PIT

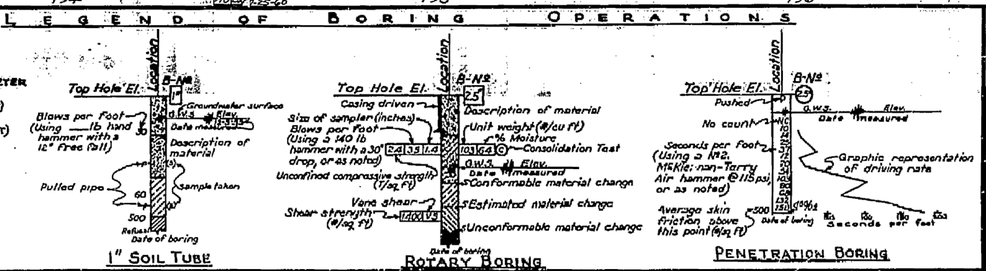

NOTES

Classification of earth material as shown on this sheet is based upon field inspection and is not to be construed to imply mechanical analysis.

RTE 22/405 — STATE OF CALIFORNIA DEPARTMENT OF PUBLIC WORKS DIVISION OF HIGHWAYS

ROUTE ~~179/158~~ SEPARATION

LOG OF TEST BORINGS

SCALE Horiz: 1"=20' Vert: 1"=10' | BRIDGE 55-333L | FILE | DRAWING C-55333-12

PREL. DRAWING NO. P-55333-B (3-16-61) | Bridge Dept.

FILENAME => 55-e0104-z-1tb05.tif

I HEREBY CERTIFY THAT THIS IS A TRUE AND ACCURATE COPY OF THE ABOVE DOCUMENT TAKEN UNDER MY DIRECTION AND CONTROL ON THIS DATE IN SACRAMENTO, CALIFORNIA PURSUANT TO AUTHORIZATION BY THE DIRECTOR OF PUBLIC WORKS.

DATE 2-10-72 SIGNATURE [illegible] TITLE SR ENG(O)

368

DIST	COUNTY	ROUTE	POST MILES TOTAL PROJECT	SHEET No	TOTAL SHEETS
12	Ora	22,405, 605	R0.3/R0.9, 22.3/24.0,3.0/R1.6	1867	1929

REGISTERED CIVIL ENGINEER 07-27-09 DATE

2-1-10
PLANS APPROVAL DATE

REGISTERED PROFESSIONAL ENGINEER A. Priley No. C 73375 Exp. 12-31-10 CIVIL STATE OF CALIFORNIA

The State of California or its officers or agents shall not be responsible for the accuracy or completeness of electronic copies of this plan sheet.

OCTA
550 SOUTH MAIN STREET
ORANGE, CA 92863

TRC
21 TECHNOLOGY DR
IRVINE, CA 92618

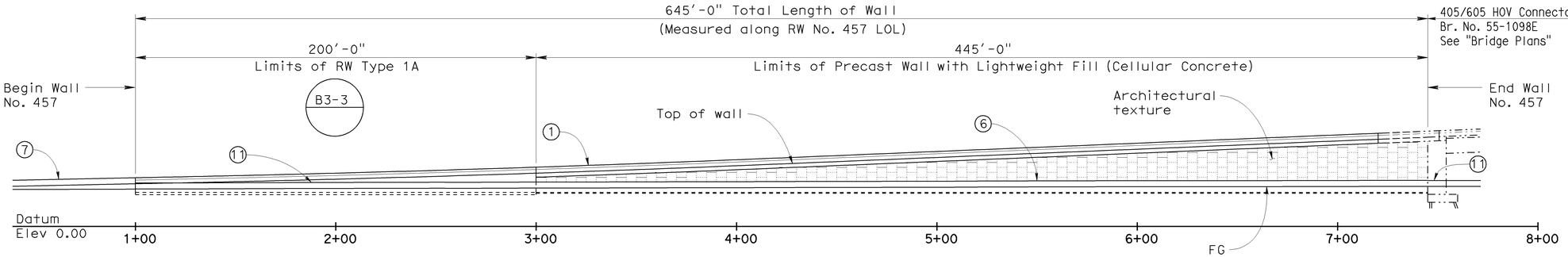

RW NO. 457 DEVELOPED MIRROR ELEVATION

1" = 30'

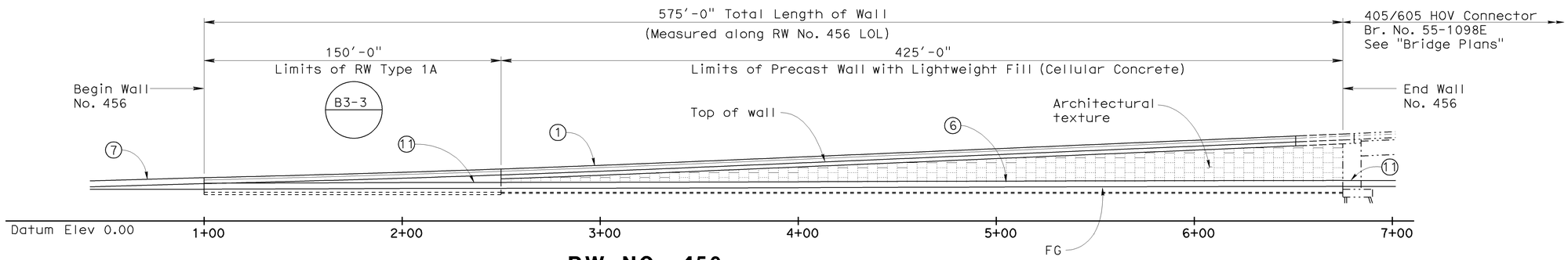

RW NO. 456 DEVELOPED ELEVATION

1" = 30'

LEGEND

(1) Concrete Barrier (Type 736 Mod)

(3) Structure Approach Slab, see "Bridge Plans"

(5) Concrete Barrier (Type 60G), see "Road Plans"

(6) Concrete Barrier (Type 60D Mod), see Note 2

(7) Concrete Barrier (Type 60C), see "Road Plans"

(11) Concrete Barrier (Type 60D) see "Road Plans"

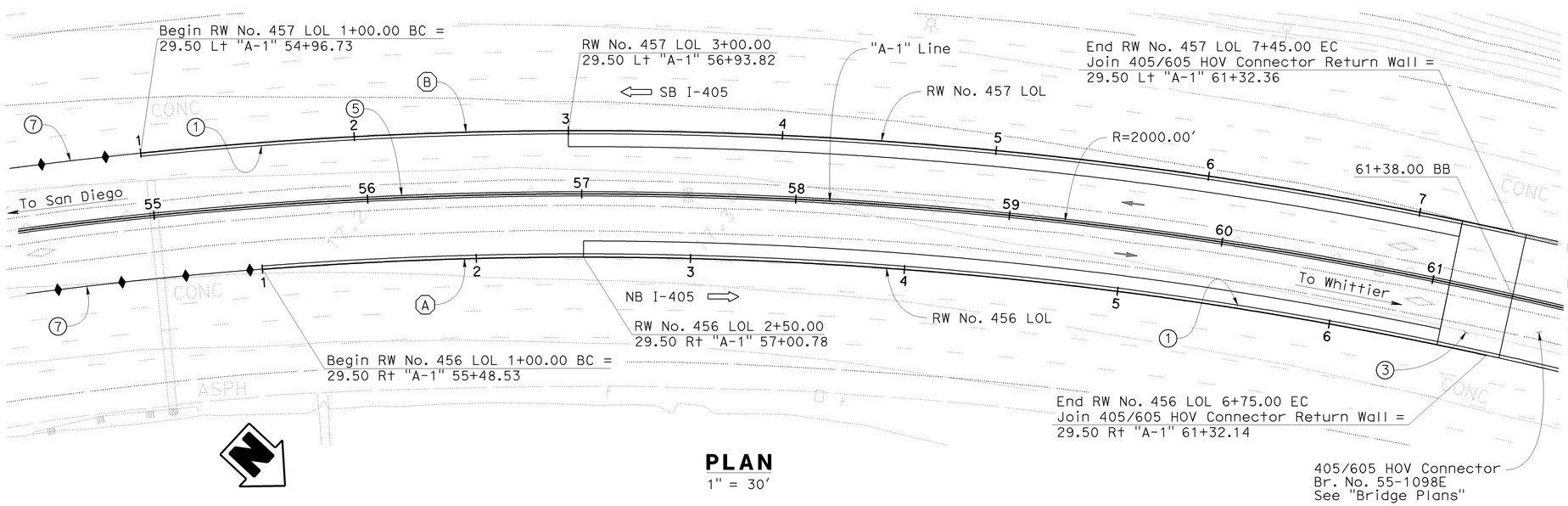

PLAN

1" = 30'

NOTES

1. For Typical Sections, see "General Plan No. 2" and "General Plan No. 3" sheets
2. For Concrete Barrier Type 60D (Mod), see "Wall Details No. 2" sheet

PRECAST WALLS NO 456 & 457 — BR NO 55E0105

QUANTITIES

STRUCTURE EXCAVATION (RETAINING WALL)	582	CY
STRUCTURE BACKFILL (RETAINING WALL)	733	CY
PERVIOUS BACKFILL MATERIAL	20	CY
LIGHTWEIGHT FILL (CELLULAR CONCRETE) (CLASS II)	2,800	CY
LIGHTWEIGHT FILL (CELLULAR CONCRETE) (CLASS IV)	15,100	CY
PRECAST CONCRETE WALL	14,750	SQFT
STRUCTURAL CONCRETE, RETAINING WALL	170	CY
STRUCTURAL CONCRETE, BARRIER SLAB	390	CY
FRACTURED RIB TEXTURE	2,315	SQFT
BAR REINFORCING STEEL (RETAINING WALL)	14,750	LB
CONCRETE BARRIER (TYPE 60D)(MODIFIED)	1,220	LF
CONCRETE BARRIER (TYPE 736 MODIFIED)	1,160	LF

CURVE DATA

NO.	R	Δ	T	L
(A)	1970.50'	16°43'09"	289.56'	575.00'
(B)	2029.50'	18°12'33"	325.24'	645.00'

Sudhakar Vatti
DESIGN OVERSIGHT Sudhakar Vatti
8-10-09
SIGN OFF DATE

	BY	CHECKED
DESIGN	A. Priley	J. Hermstad
DETAILS	A. Priley	J. Hermstad
QUANTITIES	A. Priley	J. Wong

LOAD FACTOR DESIGN (LFD) — LIVE LOADING: HS20-44 AND ALTERNATIVE AND PERMIT DESIGN LOAD

	BY	CHECKED
LAYOUT	K. Michalski	A. Priley
SPECIFICATIONS	EL Tyk	PLANS AND SPECS COMPARED J. Hermstad

PREPARED FOR THE STATE OF CALIFORNIA DEPARTMENT OF TRANSPORTATION

A. Priley
PROJECT ENGINEER

BRIDGE NO. 55E0105
POST MILES 23.45

PRECAST WALLS NO. 456 & 457 WITH LIGHTWEIGHT FILL (CELLULAR CONCRETE)

GENERAL PLAN NO. 1

DESIGN GENERAL PLAN SHEET (ENGLISH) (REV.2/25/05)

ORIGINAL SCALE IN INCHES FOR REDUCED PLANS 0 1 2 3

CU 12235
EA 071631

DISREGARD PRINTS BEARING EARLIER REVISION DATES

REVISION DATES (PRELIMINARY STAGE ONLY): ~~08/15/08~~ ~~10/15/08~~ ~~04/06/09~~ 07/27/09

SHEET 1 OF 28

FILE => 55-e0105-a-gp01.dgn

USERNAME => trcarol DATE PLOTTED => 04-FEB-2010 TIME PLOTTED => 11:01

DIST	COUNTY	ROUTE	POST MILES TOTAL PROJECT	SHEET No	TOTAL SHEETS
12	Ora	22,405, 605	R0.3/R0.9, 22.3/24.0,3.0/R1.6	1868	1929

REGISTERED CIVIL ENGINEER 07-27-09 DATE

2-1-10
PLANS APPROVAL DATE

The State of California or its officers or agents shall not be responsible for the accuracy or completeness of electronic copies of this plan sheet.

REGISTERED PROFESSIONAL ENGINEER A. Priley No. C 73375 Exp. 12-31-10 CIVIL STATE OF CALIFORNIA

OCTA
550 SOUTH MAIN STREET
ORANGE, CA 92863

TRC
21 TECHNOLOGY DR
IRVINE, CA 92618

LEGEND

1. Concrete Barrier (Type 736 Mod)
2. Roadway Section, see "Road Plans"
4. Precast Concrete Wall Panels with Architectural Texture
5. Concrete Barrier (Type 60G), see "Road Plans"
6. Concrete Barrier (Type 60D Mod), see Notes 2 and 3
7. Concrete Barrier (Type 60C) see Note 4
8. Treated permeable base
9. Retaining Wall Type 1A
11. Concrete Barrier (Type 60D) see "Road Plans

Lightweight Fill (Cellular Concrete) - Class IV

Lightweight Fill (Cellular Concrete) - Class II

* Limits of pavement reconstruction, "See Road Plans"

NOTES

1. For Plan and Elevations, see "General Plan No. 1" sheet
2. For Concrete Barrier (Type 60D Mod), see "Wall Details No. 2" sheet
3. For transition from Concrete Barrier (Type 60D) to Concrete Barrier (Type 60D Mod), see "Road Plans"
4. For Concrete Barrier (Type 60C) and transition from (Type 60C) to (Type 60D), see "Road Plans"
5. Longitudinal construction joints are not allowed along the top cellular concrete layer. Transverse joints in the top cellular concrete layer shall be per details shown on "Drainage Details No. 2" sheet

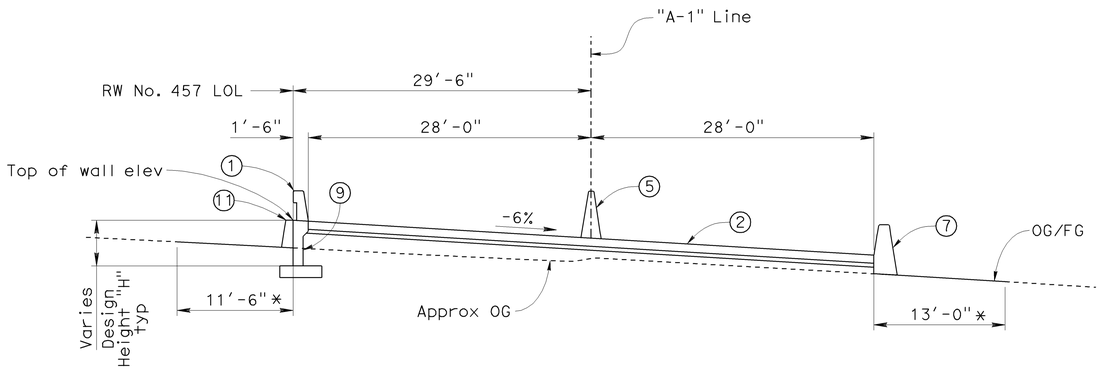

STA 54+96.73 TO 55+48.53

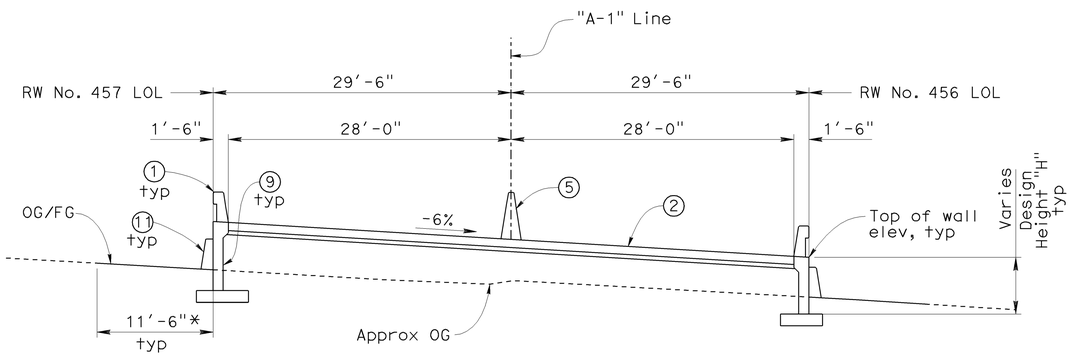

STA 55+48.53 TO 56+93.82

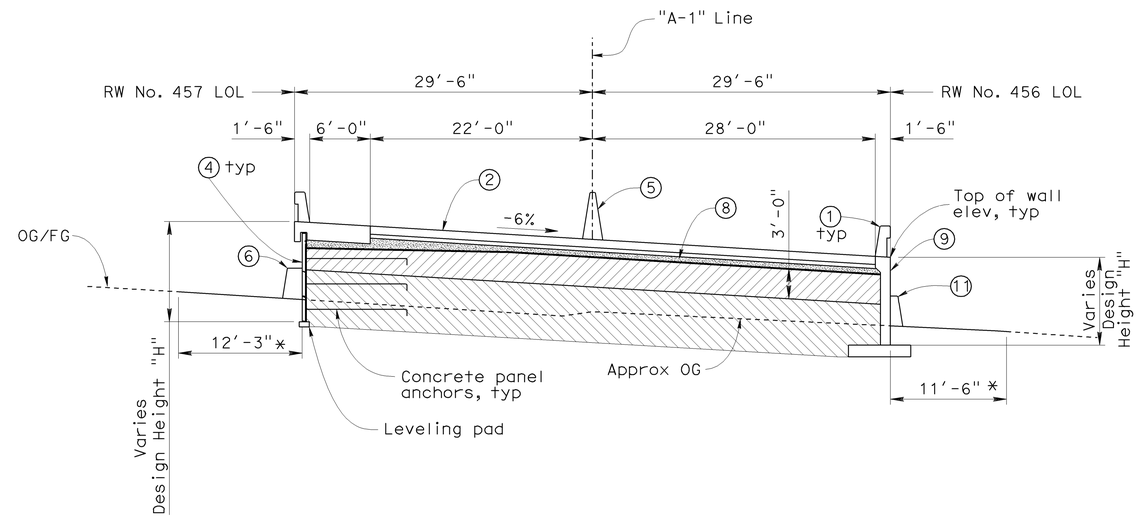

STA 56+93.82 TO 57+00.78

TYPICAL SECTIONS

No Scale

Sudhakar Vatti — DESIGN OVERSIGHT	DESIGN	BY A. Priley	CHECKED J. Hermstad	LOAD FACTOR DESIGN (LFD)	LIVE LOADING: HS20-44 AND ALTERNATIVE AND PERMIT DESIGN LOAD
8-10-09 SIGN OFF DATE	DETAILS	BY A. Priley	CHECKED J. Hermstad	LAYOUT	BY K. Michalski / CHECKED A. Priley
	QUANTITIES	BY A. Priley	CHECKED J. Wong	SPECIFICATIONS	BY EL Tyk / PLANS AND SPECS COMPARED J. Hermstad

PREPARED FOR THE STATE OF CALIFORNIA DEPARTMENT OF TRANSPORTATION

A. Priley
PROJECT ENGINEER

BRIDGE NO. 55E0105
POST MILES 23.45

PRECAST WALLS NO. 456 & 457 WITH LIGHTWEIGHT FILL (CELLULAR CONCRETE)

GENERAL PLAN NO. 2

DESIGN GENERAL PLAN SHEET (ENGLISH) (REV.2/25/05)

ORIGINAL SCALE IN INCHES FOR REDUCED PLANS 0 1 2 3

CU 12235
EA 071631

DISREGARD PRINTS BEARING EARLIER REVISION DATES

REVISION DATES (PRELIMINARY STAGE ONLY) 08/15/08 10/15/08 04/06/09 07/27/09

SHEET 2 OF 28

FILE => 55-e0105-a-gp02.dgn

USERNAME => ttcarol DATE PLOTTED => 04-FEB-2010 TIME PLOTTED => 11:01

DIST	COUNTY	ROUTE	POST MILES TOTAL PROJECT	SHEET No	TOTAL SHEETS
12	Ora	22,405, 605	R0.3/R0.9, 22.3/24.0,3.0/R1.6	1869	1929

REGISTERED CIVIL ENGINEER 07-27-09 DATE

2-1-10
PLANS APPROVAL DATE

REGISTERED PROFESSIONAL ENGINEER A. Priley No. C 73375 Exp. 12-31-10 CIVIL STATE OF CALIFORNIA

The State of California or its officers or agents shall not be responsible for the accuracy or completeness of electronic copies of this plan sheet.

OCTA
550 SOUTH MAIN STREET
ORANGE, CA 92863

TRC
21 TECHNOLOGY DR
IRVINE, CA 92618

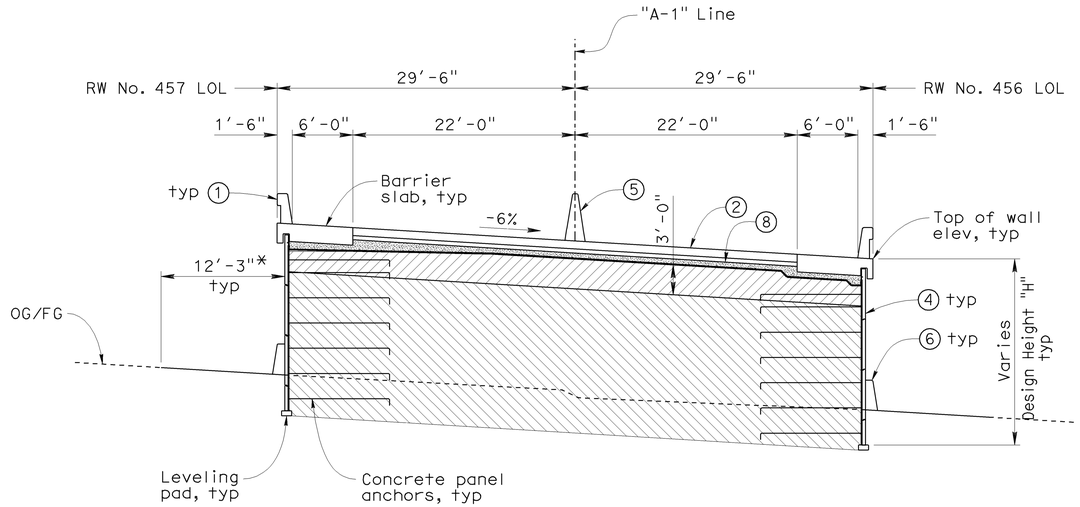

STA 57+00.78 TO 58+30.00

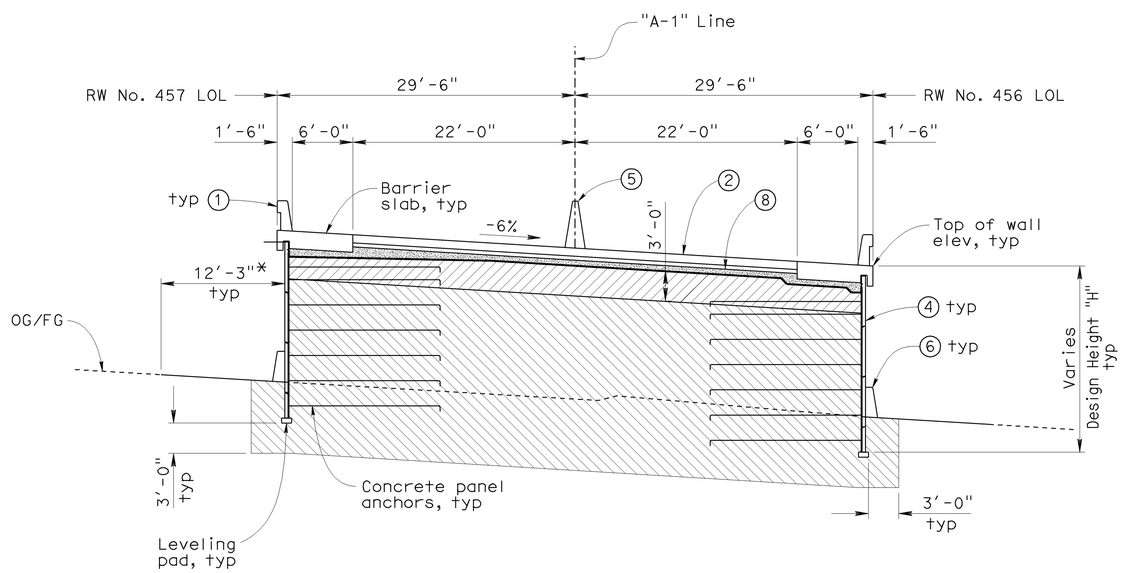

STA 58+30.00 TO BEGIN APPROACH SLAB

LEGEND

1. Concrete Barrier (Type 736 Mod)
2. Roadway Section, see "Road Plans"
3. Structure Approach Slab, see "Bridge Plans"
4. Precast Concrete Wall Panels with Architectural Texture
5. Concrete Barrier (Type 60G), see "Road Plans"
6. Concrete Barrier (Type 60D Mod), see Notes 2 and 3
8. Treated permeable base
10. Concrete Barrier (Type 60GA), see "Bridge Plans"

Lightweight Fill (Cellular Concrete) - Class IV

Lightweight Fill (Cellular Concrete) - Class II

* Limits of pavement reconstruction, "See Road Plans"

NOTES

1. For Plan and Elevations, see "General Plan No. 1" sheet
2. For Concrete Barrier (Type 60D Mod), see "Wall Details No. 2" sheet
3. For transition from Concrete Barrier (Type 60D) to Concrete Barrier (Type 60D Mod) see "Road Plans"
4. Longitudinal construction joints are not allowed along the top cellular concrete layer. Transverse joints in the top cellular concrete layer shall be per details shown on "Drainage Details No. 2" sheet
5. Lightweight fill extends to the backface of Abut 1 on "405/605 HOV Connector." For detail behind abutment backwall, see "405/605 HOV Connector" plans

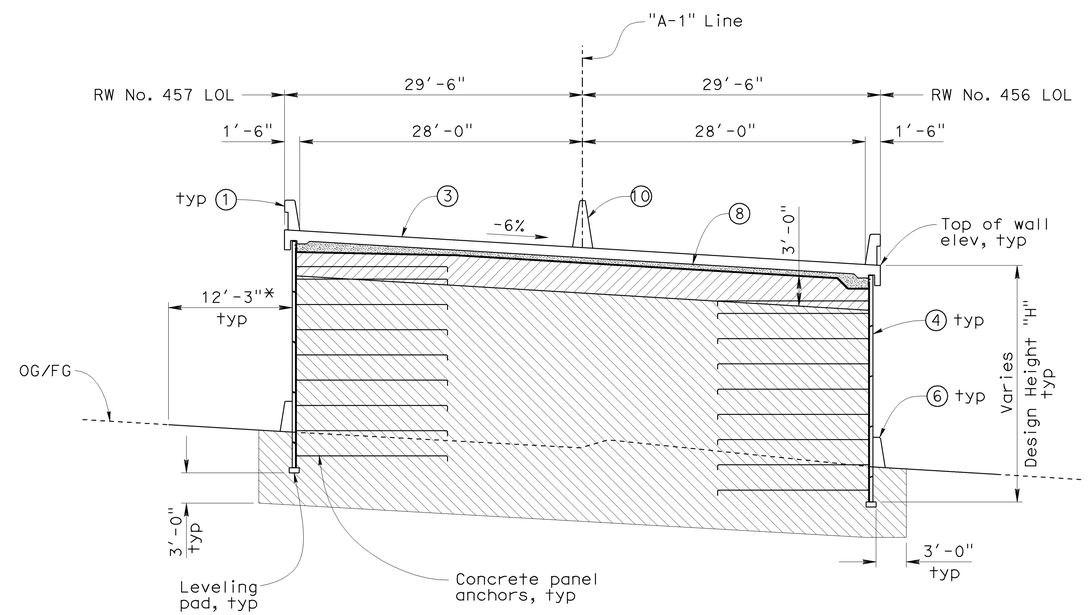

AT APPROACH SLAB

(See Note 5)

TYPICAL SECTIONS

No Scale

Sudhakar Vatti
DESIGN OVERSIGHT Sudhakar Vatti
8-10-09
SIGN OFF DATE

	BY	CHECKED			
DESIGN	A. Priley	J. Hermstad	LOAD FACTOR DESIGN (LFD)	LIVE LOADING: HS20-44 AND ALTERNATIVE AND PERMIT DESIGN LOAD	
DETAILS	A. Priley	J. Hermstad	LAYOUT	K. Michalski	A. Priley
QUANTITIES	A. Priley	J. Wong	SPECIFICATIONS	EL Tyk	PLANS AND SPECS COMPARED J. Hermstad

PREPARED FOR THE STATE OF CALIFORNIA DEPARTMENT OF TRANSPORTATION

A. Priley
PROJECT ENGINEER

BRIDGE NO. 55E0105
POST MILES 23.45

PRECAST WALLS NO. 456 & 457 WITH LIGHTWEIGHT FILL (CELLULAR CONCRETE)

GENERAL PLAN NO. 3

DESIGN GENERAL PLAN SHEET (ENGLISH) (REV.2/25/05)

ORIGINAL SCALE IN INCHES FOR REDUCED PLANS 0 1 2 3

CU 12235
EA 071631

DISREGARD PRINTS BEARING EARLIER REVISION DATES

REVISION DATES (PRELIMINARY STAGE ONLY) 08/15/08 10/15/08 04/06/09 07/27/09

SHEET 3 OF 28

FILE => 55-e0105-a-gp03.dgn

USERNAME => trcarol DATE PLOTTED => 04-FEB-2010 TIME PLOTTED => 11:01

DIST	COUNTY	ROUTE	POST MILES TOTAL PROJECT	SHEET No	TOTAL SHEETS
12	Ora	22,405, 605	R0.3/R0.9, 22.3/24.0,3.0/R1.6	1870	1929

REGISTERED CIVIL ENGINEER 07-27-09 DATE

2-1-10
PLANS APPROVAL DATE

The State of California or its officers or agents shall not be responsible for the accuracy or completeness of electronic copies of this plan sheet.

REGISTERED PROFESSIONAL ENGINEER
A. Priley
No. C 73375
Exp. 12-31-10
CIVIL
STATE OF CALIFORNIA

OCTA
550 SOUTH MAIN STREET
ORANGE, CA 92863

TRC
21 TECHNOLOGY DR
IRVINE, CA 92618

STANDARD PLANS DATED MAY 2006

A10A	Acronyms and Abbreviations (Sheet 1 of 2)
A10B	Acronyms and Abbreviations (Sheet 2 of 2)
A10C	Symbols (Sheet 1 of 2)
A10D	Symbols (Sheet 2 of 2)
A74	Survey Monuments
A76A	Concrete Barrier Type 60
A76B	Concrete Barrier Type 60
B0-3	Bridge Details
B3-3	Retaining Wall Type 1A
B3-8	Retaining Wall Details No. 1
B11-56	Concrete Barrier Type 736
P1	Jointed Plain Concrete Pavement
P10	Concrete Pavement - Dowel Bar Details

Standard Plan Sheet No.

Detail No.

GENERAL NOTES (PRECAST WALLS)

Design: Caltrans Bridge Design Specifications - April 2000 (LFD)
(1996 AASHTO with Interims and Revisions by Caltrans)

Live loading: Surcharge = 240 lb/ft^2

Lightweight Fill (Cellular Concrete):

Class II parameters

γ = 30 lb/ft^3

f'c = 40 psi (Minimum compressive strength at 28 days)

Class IV parameters

γ = 42 lb/ft^3

f'c = 120 psi (Minimum compressive strength at 28 days)

Precast concrete panels:

f'c = 4,000 psi (Minimum concrete compressive strength at 28 days)

fy = 65 ksi (Welded wire reinforcement)

Reinforcing Studs:

fy = 60 ksi

Reinforced concrete:

f'c = 3,600 psi, except as noted
(Minimum concrete compressive strength at 28 days)

fy = 60 ksi

Design Seismic Load:

0.5 Dead Load

EPDM = Ehtylene Propylene Diene M-Class Rubber

INDEX TO PLANS

SHEET NO.	TITLE
1	General Plan No. 1
2	General Plan No. 2
3	General Plan No. 3
4	Index to Plans
5	Excavation & Backfill Details
6	Structure Plan No. 1
7	Structure Plan No. 2
8	Structure Plan No. 3
9	Structure Plan No. 4
10	Structure Plan No. 5
11	Structure Plan No. 6
12	Panel Details No. 1
13	Panel Details No. 2
14	Wall Details No. 1
15	Wall Details No. 2
16	Drainage Details No. 1
17	Drainage Details No. 2
18	Drainage Details No. 3
19	Architectural Panel Layout No. 1
20	Architectural Panel Layout No. 2
21	Architectural Details No. 1
22	Architectural Details No. 2
23	Architectural Details No. 3
24	Log of Test Borings No. 1
25	Log of Test Borings No. 2
26	Log of Test Borings No. 3
27	Log of Test Borings No. 4
28	Log of Test Borings No. 5

Sudhakar Vatti
DESIGN OVERSIGHT Sudhakar Vatti
8-10-09
SIGN OFF DATE

	BY	CHECKED
DESIGN	A. Priley	J. Hermstad
DETAILS	A. Priley	J. Hermstad
QUANTITIES	A. Priley	J. Wong

PREPARED FOR THE
STATE OF CALIFORNIA
DEPARTMENT OF TRANSPORTATION

A. Priley
PROJECT ENGINEER

BRIDGE NO. 55E0105
POST MILE 23.45

PRECAST WALLS NO. 456 & 457 WITH LIGHTWEIGHT FILL (CELLULAR CONCRETE)

INDEX TO PLANS

DESIGN DETAIL SHEET (ENGLISH) (REV. 2/25/05)

ORIGINAL SCALE IN INCHES FOR REDUCED PLANS 0 1 2 3

CU 12235
EA 071631

DISREGARD PRINTS BEARING EARLIER REVISION DATES

REVISION DATES (PRELIMINARY STAGE ONLY) 10/25/08 04/06/09 07/27/09

SHEET 4 OF 28

FILE => 55-e0105-a-itp.dgn

USERNAME => trcarol DATE PLOTTED => 04-FEB-2010 TIME PLOTTED => 11:01

DIST	COUNTY	ROUTE	POST MILES TOTAL PROJECT	SHEET No	TOTAL SHEETS
12	Ora	22,405, 605	R0.3/R0.9, 22.3/24.0,3.0/R1.6	1871	1929

REGISTERED CIVIL ENGINEER 07-27-09 DATE

2-1-10
PLANS APPROVAL DATE

REGISTERED PROFESSIONAL ENGINEER A. Priley No. C 73375 Exp. 12-31-10 CIVIL STATE OF CALIFORNIA

The State of California or its officers or agents shall not be responsible for the accuracy or completeness of electronic copies of this plan sheet.

OCTA
550 SOUTH MAIN STREET
ORANGE, CA 92863

TRC
21 TECHNOLOGY DR
IRVINE, CA 92618

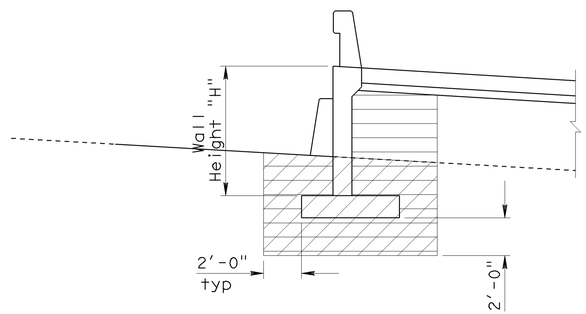

RETAINING WALL TYPE 1A
BEGIN WALL THRU STA 56+93.82

No Scale

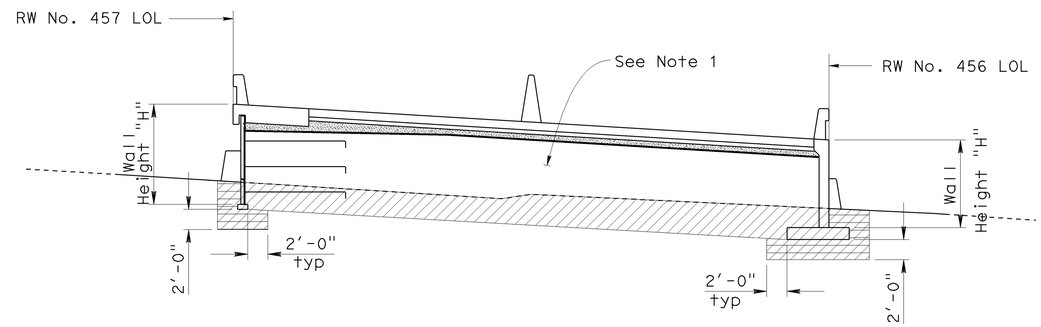

STA 56+93.82 TO 57+000.78

No Scale

NOTES

1. For limits of Lightweight Fill (Cellular Concrete), see "General Plan No. 2" and "General Plan No. 3" sheets

LEGEND

Structure Excavation

Structure Backfill

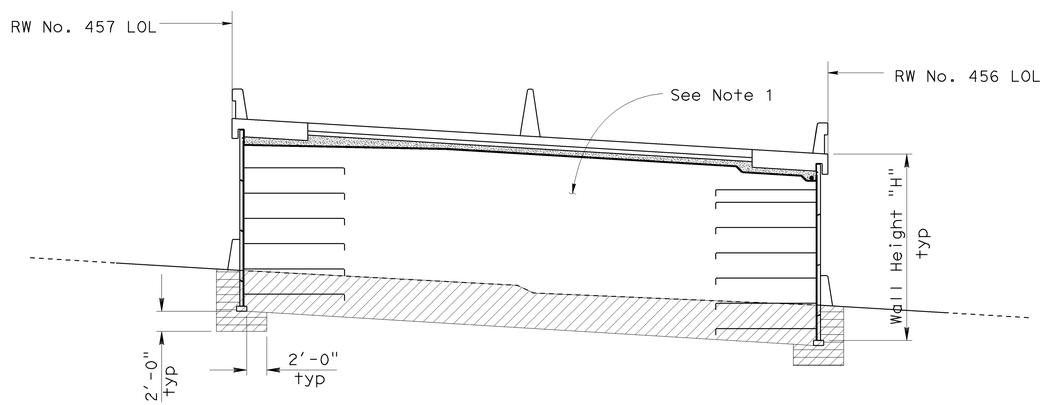

STA 57+00.78 TO 58+30.00

No Scale

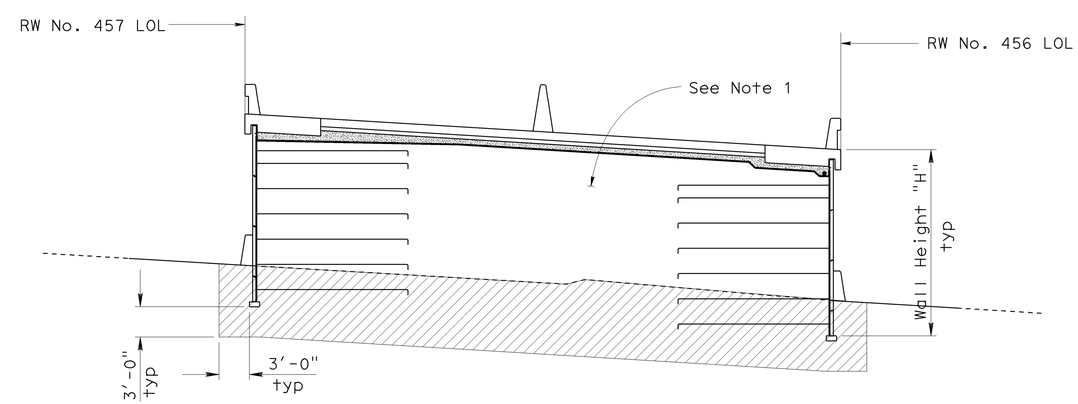

STA 58+30.00 TO END WALL

No Scale

LIMITS OF EXCAVATION AND BACKFILL

No Scale

Sudhakar Vatti
DESIGN OVERSIGHT Sudhakar Vatti

8-10-09
SIGN OFF DATE

	BY	CHECKED
DESIGN	A. Priley	J. Hermstad
DETAILS	A. Priley	J. Hermstad
QUANTITIES	A. Priley	J. Wong

PREPARED FOR THE STATE OF CALIFORNIA DEPARTMENT OF TRANSPORTATION

A. Priley
PROJECT ENGINEER

BRIDGE NO. 55E0105
POST MILE 23.45

PRECAST WALLS NO. 456 & 457 WITH LIGHTWEIGHT FILL (CELLULAR CONCRETE)
EXCAVATION & BACKFILL DETAILS

DESIGN DETAIL SHEET (ENGLISH) (REV. 2/25/05)

ORIGINAL SCALE IN INCHES FOR REDUCED PLANS 0 1 2 3

CU 12235
EA 071631

DISREGARD PRINTS BEARING EARLIER REVISION DATES

REVISION DATES (PRELIMINARY STAGE ONLY) 10/25/08 04/06/09 07/27/09

SHEET 5 OF 28

FILE => 55-e0105-b-ebd.dgn

USERNAME => trstrk DATE PLOTTED => 04-FEB-2010 TIME PLOTTED => 10:30

DIST	COUNTY	ROUTE	POST MILES TOTAL PROJECT	SHEET No	TOTAL SHEETS
12	Ora	22,405, 605	R0.3/R0.9, 22.3/24.0,3.0/R1.6	1872	1929

REGISTERED CIVIL ENGINEER 07-27-09 DATE

2-1-10
PLANS APPROVAL DATE

The State of California or its officers or agents shall not be responsible for the accuracy or completeness of electronic copies of this plan sheet.

REGISTERED PROFESSIONAL ENGINEER A. Priley No. C 73375 Exp. 12-31-10 CIVIL STATE OF CALIFORNIA

OCTA
550 SOUTH MAIN STREET
ORANGE, CA 92863

TRC
21 TECHNOLOGY DR
IRVINE, CA 92618

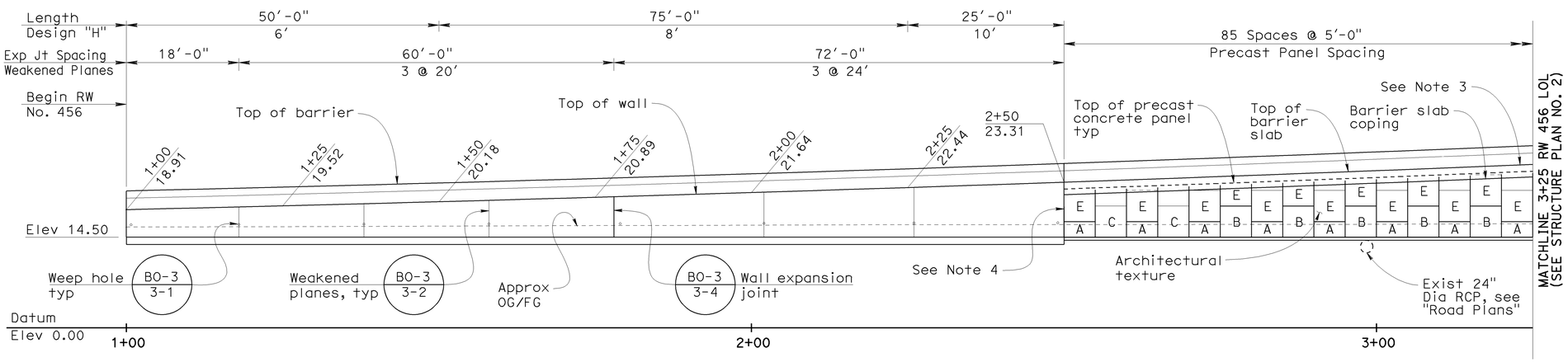

Note: Concrete barrier (Type 60D) and (Type 60D Mod) not shown

RW NO. 456 DEVELOPED ELEVATION

1" = 10'

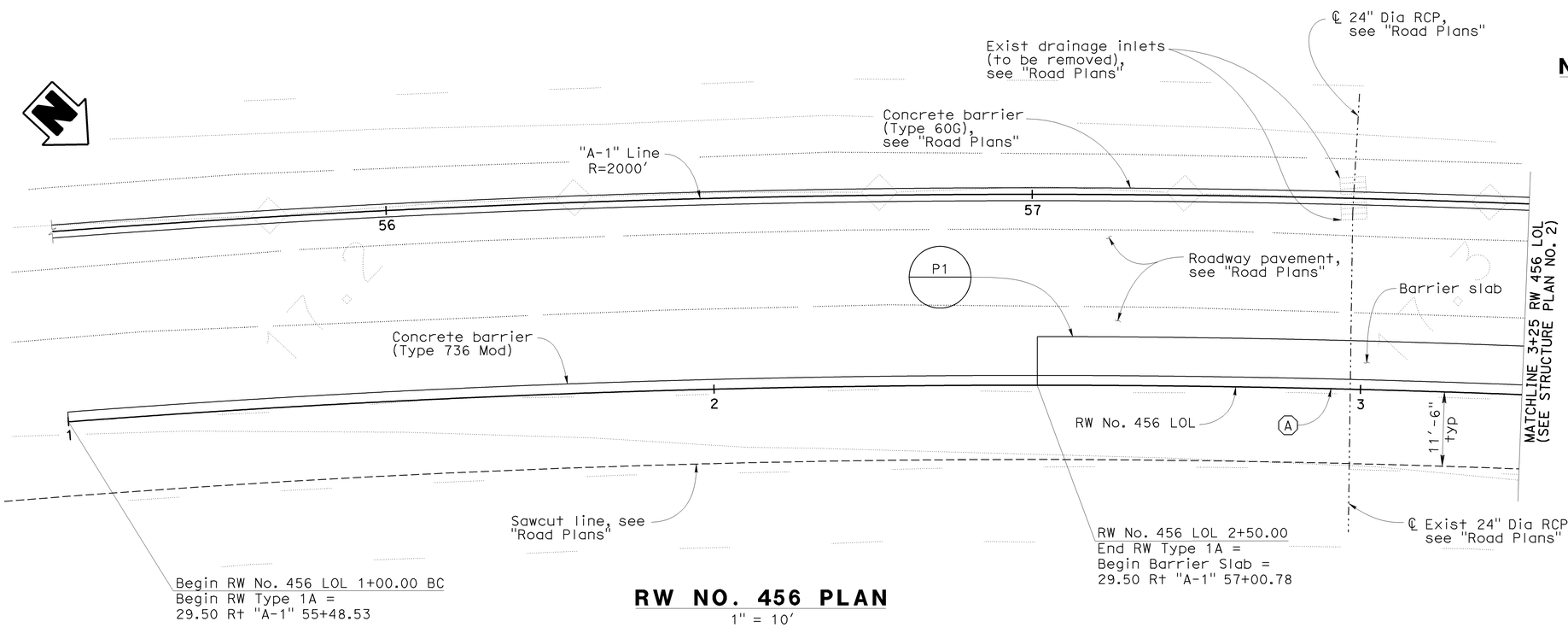

RW NO. 456 PLAN

1" = 10'

LEGEND

A — Indicates panel type designation (See Notes 1 & 2)

NOTES

1. For precast panel details, see "Panel Details No. 1" and "Panel Details No. 2" sheets
2. For architectural texture and details, see "Architectural Panel Layout No. 1" and "Architectural Details No. 1" thru "Architectural Panel Details No. 3" sheets
3. For top of wall elevations within limits of precast panel wall, see "Wall Details No. 1" sheet
4. For connection details between precast concrete panels and concrete wall, see "Wall Details No. 2" sheet
5. For barrier slab details, see "Wall Details No. 1" sheet
6. Elevation shown at top of footing and top of leveling pad

CURVE DATA

NO.	R	Δ	T	L
A	1970.50'	16°43'09"	289.56'	575.00'

Sudhakar Vatti
DESIGN OVERSIGHT Sudhakar Vatti
8-10-09
SIGN OFF DATE

	BY	CHECKED
DESIGN	A. Priley	J. Hermstad
DETAILS	A. Priley	J. Hermstad
QUANTITIES	A. Priley	J. Wong

PREPARED FOR THE STATE OF CALIFORNIA DEPARTMENT OF TRANSPORTATION

A. Priley
PROJECT ENGINEER

BRIDGE NO. 55E0105
POST MILE 23.45

PRECAST WALLS NO. 456 & 457 WITH LIGHTWEIGHT FILL (CELLULAR CONCRETE)

STRUCTURE PLAN NO. 1

DESIGN DETAIL SHEET (ENGLISH) (REV. 2/25/05)

ORIGINAL SCALE IN INCHES FOR REDUCED PLANS 0 1 2 3

CU 12235
EA 071631

DISREGARD PRINTS BEARING EARLIER REVISION DATES → REVISION DATES (PRELIMINARY STAGE ONLY) 10/15/08 04/06/09 07/27/09

SHEET 6 OF 28

FILE => 55-e0105-c-sp01.dgn

USERNAME => ttrstrk DATE PLOTTED => 04-FEB-2010 TIME PLOTTED => 10:30

DIST	COUNTY	ROUTE	POST MILES TOTAL PROJECT	SHEET No	TOTAL SHEETS
12	Ora	22,405, 605	R0.3/R0.9, 22.3/24.0,3.0/R1.6	1873	1929

REGISTERED CIVIL ENGINEER 07-27-09 DATE

2-1-10
PLANS APPROVAL DATE

REGISTERED PROFESSIONAL ENGINEER A. Priley No. C 73375 Exp. 12-31-10 CIVIL STATE OF CALIFORNIA

The State of California or its officers or agents shall not be responsible for the accuracy or completeness of electronic copies of this plan sheet.

OCTA
550 SOUTH MAIN STREET
ORANGE, CA 92863

TRC
21 TECHNOLOGY DR
IRVINE, CA 92618

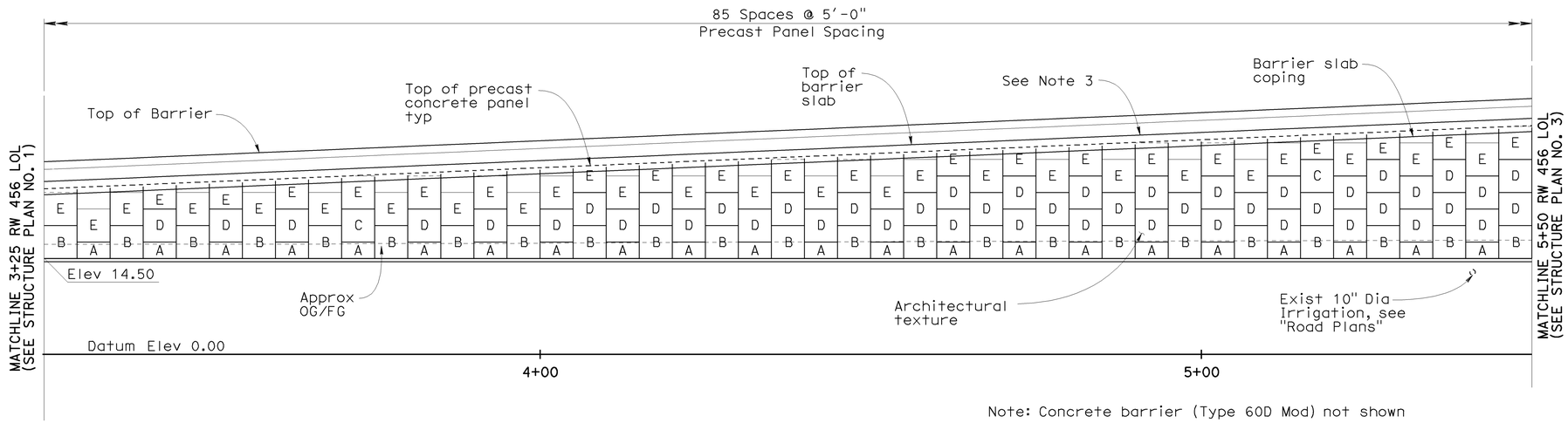

Note: Concrete barrier (Type 60D Mod) not shown

RW NO. 456 DEVELOPED ELEVATION

1" = 10'

LEGEND

A	Indicates panel type designation (See Notes 1 & 2)

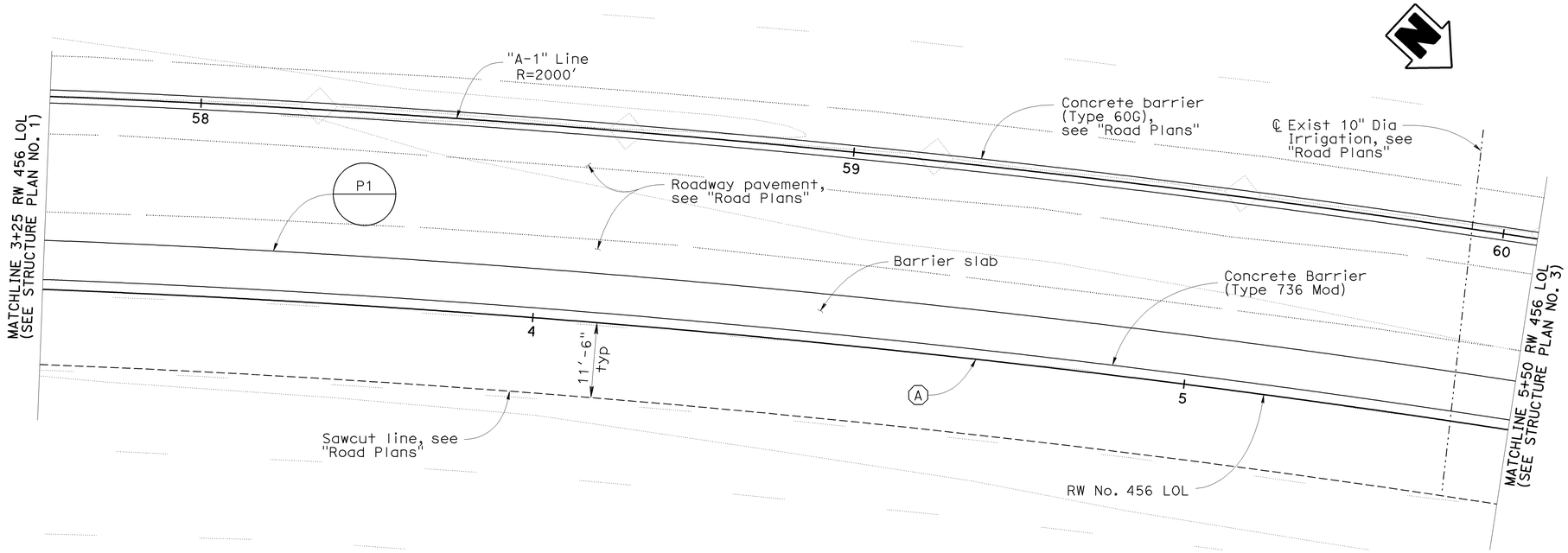

RW NO. 456 PLAN

1" = 10'

NOTES

1. For precast panel details, see "Panel Details No. 1" and "Panel Details No. 2" sheets
2. For architectural texture and details, see "Architectural Panel Layout No. 1" and "Architectural Details No. 1" thru "Architectural Panel Details No. 3" sheets
3. For top of wall elevations within limits of precast panel wall, see "Wall Details No. 1" sheet
4. For barrier slab details, see "Wall Details No. 1" sheet
5. Elevation shown at top of leveling pad

CURVE DATA

NO.	R	Δ	T	L
A	1970.50'	16°43'09"	289.56'	575.00'

Sudhakar Vatti
DESIGN OVERSIGHT Sudhakar Vatti
8-10-09
SIGN OFF DATE

	BY	CHECKED
DESIGN	A. Priley	J. Hermstad
DETAILS	A. Priley	J. Hermstad
QUANTITIES	A. Priley	J. Wong

PREPARED FOR THE STATE OF CALIFORNIA DEPARTMENT OF TRANSPORTATION

A. Priley
PROJECT ENGINEER

BRIDGE NO. 55E0105
POST MILE 23.45

PRECAST WALLS NO. 456 & 457 WITH LIGHTWEIGHT FILL (CELLULAR CONCRETE)
STRUCTURE PLAN NO. 2

DESIGN DETAIL SHEET (ENGLISH) (REV. 2/25/05)

ORIGINAL SCALE IN INCHES FOR REDUCED PLANS 0 1 2 3

CU 12235
EA 071631

DISREGARD PRINTS BEARING EARLIER REVISION DATES

REVISION DATES (PRELIMINARY STAGE ONLY) 10/15/08 04/06/09 07/27/09

SHEET 7 OF 28

FILE => 55-e0105-c-sp02.dgn

USERNAME => trstrk DATE PLOTTED => 04-FEB-2010 TIME PLOTTED => 10:30

DIST	COUNTY	ROUTE	POST MILES TOTAL PROJECT	SHEET No	TOTAL SHEETS
12	Ora	22,405, 605	R0.3/R0.9, 22.3/24.0,3.0/R1.6	1874	1929

REGISTERED CIVIL ENGINEER 07-27-09 DATE

2-1-10
PLANS APPROVAL DATE

REGISTERED PROFESSIONAL ENGINEER A. Priley No. C 73375 Exp. 12-31-10 CIVIL STATE OF CALIFORNIA

The State of California or its officers or agents shall not be responsible for the accuracy or completeness of electronic copies of this plan sheet.

OCTA
550 SOUTH MAIN STREET
ORANGE, CA 92863

TRC
21 TECHNOLOGY DR
IRVINE, CA 92618

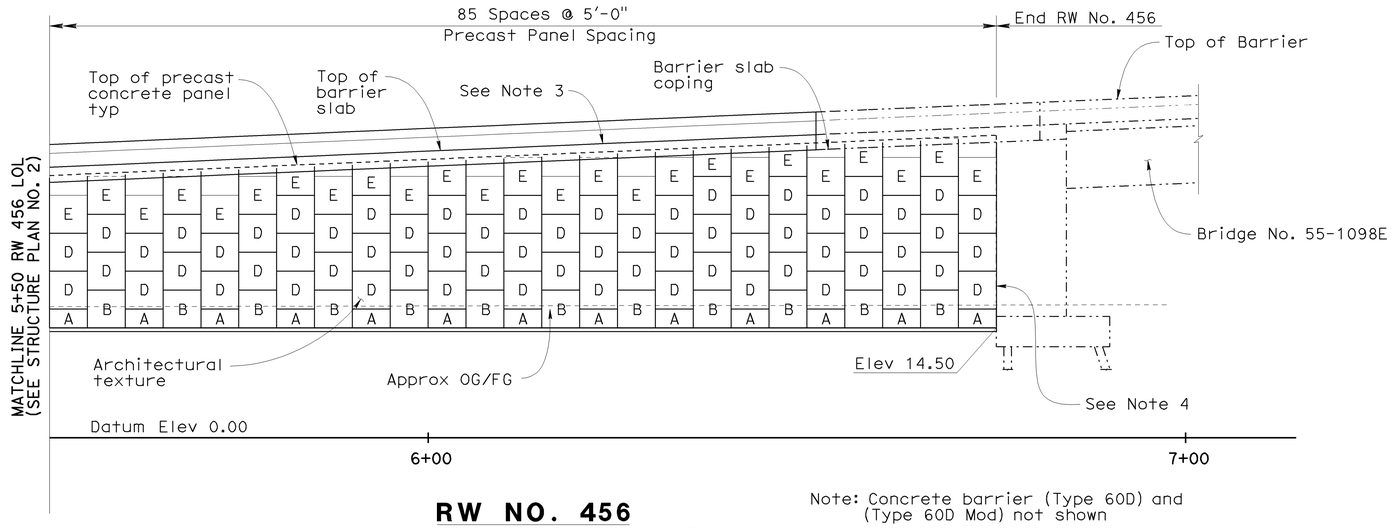

Note: Concrete barrier (Type 60D) and (Type 60D Mod) not shown

RW NO. 456 DEVELOPED ELEVATION

1" = 10'

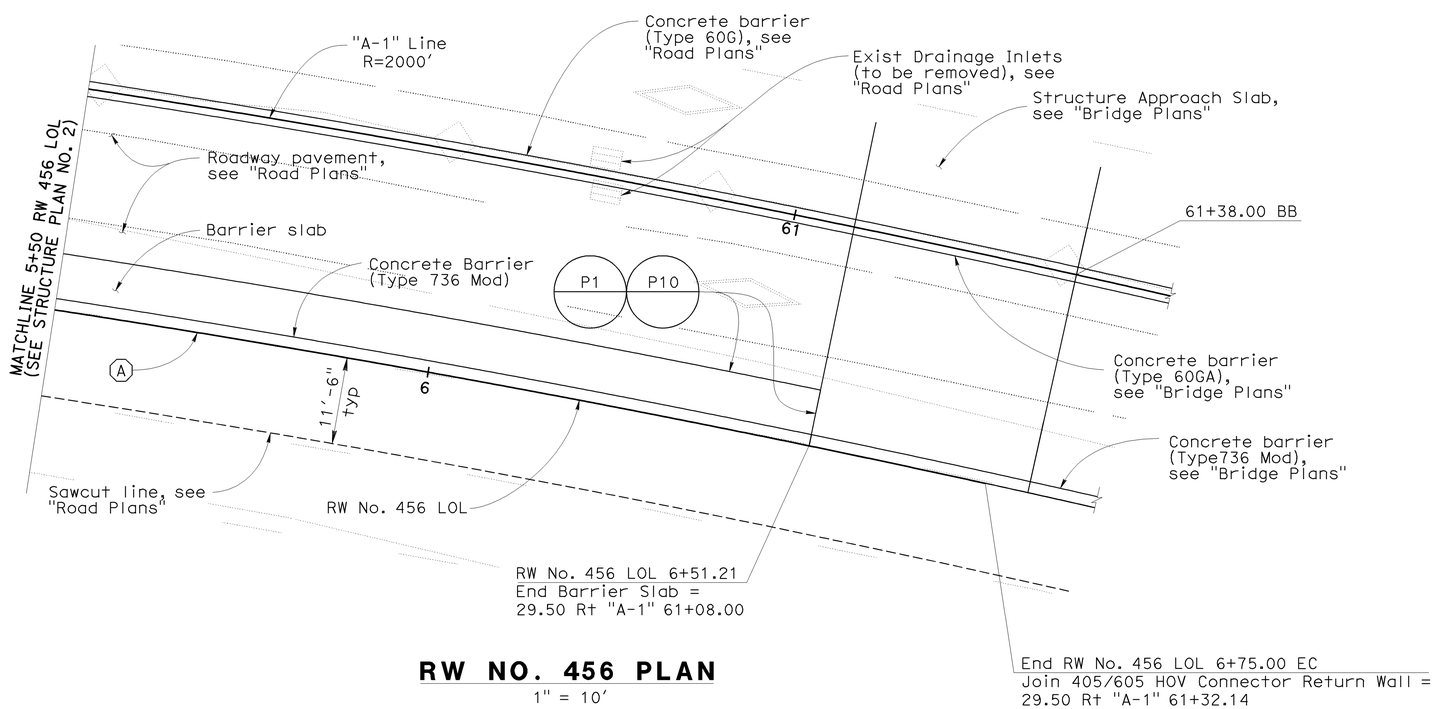

RW NO. 456 PLAN

1" = 10'

LEGEND

A	Indicates panel type designation (See Notes 1 & 2)

NOTES

1. For precast panel details, see "Panel Details No. 1" and "Panel Details No. 2" sheets
2. For architectural texture and details, see "Architectural Panel Layout No. 1" and "Architectural Details No. 1" thru "Architectural Panel Details No. 3" sheets
3. For top of wall elevations within limits of precast panel wall, see "Wall Details No. 1" sheet
4. For connection details between precast concrete panels and concrete wall, see "Wall Details No. 2" sheet
5. For barrier slab details, see "Wall Details No. 1" sheet
6. Elevation shown at top of leveling pad

CURVE DATA

NO.	R	Δ	T	L
A	1970.50'	16°43'09"	289.56'	575.00'

Sudhakar Vatti
DESIGN OVERSIGHT Sudhakar Vatti
8-10-09
SIGN OFF DATE

	BY	CHECKED
DESIGN	A. Priley	J. Hermstad
DETAILS	A. Priley	J. Hermstad
QUANTITIES	A. Priley	J. Wong

PREPARED FOR THE STATE OF CALIFORNIA DEPARTMENT OF TRANSPORTATION

A. Priley
PROJECT ENGINEER

BRIDGE NO. 55E0105
POST MILE 23.45

PRECAST WALLS NO. 456 & 457 WITH LIGHTWEIGHT FILL (CELLULAR CONCRETE)

STRUCTURE PLAN NO. 3

DESIGN DETAIL SHEET (ENGLISH) (REV. 2/25/05)

ORIGINAL SCALE IN INCHES FOR REDUCED PLANS 0 1 2 3

CU 12235
EA 071631

DISREGARD PRINTS BEARING EARLIER REVISION DATES

REVISION DATES (PRELIMINARY STAGE ONLY) 10/15/08 04/06/09 07/27/09

SHEET 8 OF 28

FILE => 55-e0105-c-sp03.dgn

USERNAME => trsthk DATE PLOTTED => 04-FEB-2010 TIME PLOTTED => 10:31

DIST	COUNTY	ROUTE	POST MILES TOTAL PROJECT	SHEET No	TOTAL SHEETS
12	Ora	22,405, 605	R0.3/R0.9, 22.3/24.0,3.0/R1.6	1875	1929

REGISTERED CIVIL ENGINEER 07-27-09 DATE

2-1-10
PLANS APPROVAL DATE

The State of California or its officers or agents shall not be responsible for the accuracy or completeness of electronic copies of this plan sheet.

REGISTERED PROFESSIONAL ENGINEER A. Priley No. C 73375 Exp. 12-31-10 CIVIL STATE OF CALIFORNIA

OCTA
550 SOUTH MAIN STREET
ORANGE, CA 92863

TRC
21 TECHNOLOGY DR
IRVINE, CA 92618

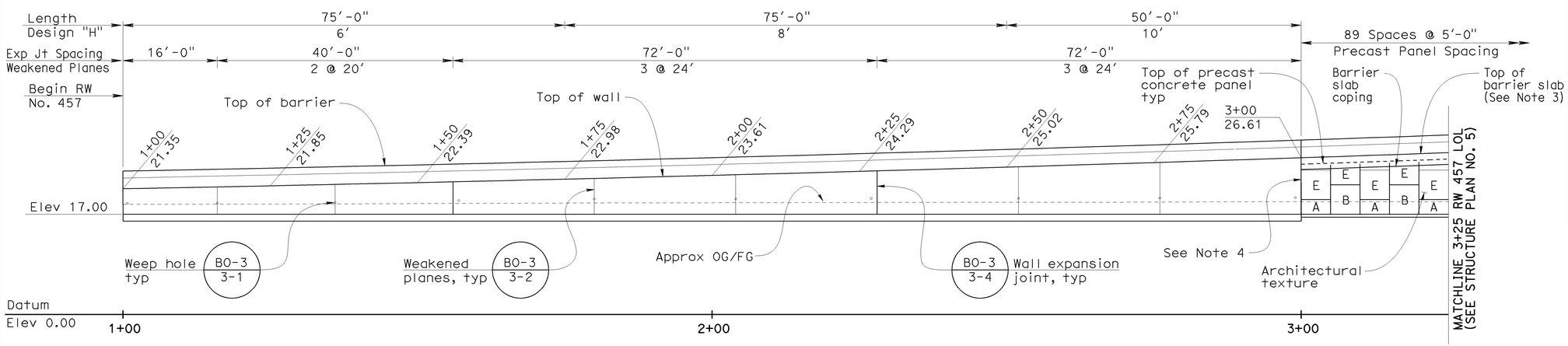

Note: Concrete barrier (Type 60D) and (Type 60D Mod) not shown

RW NO. 457
DEVELOPED MIRROR ELEVATION

1" = 10'

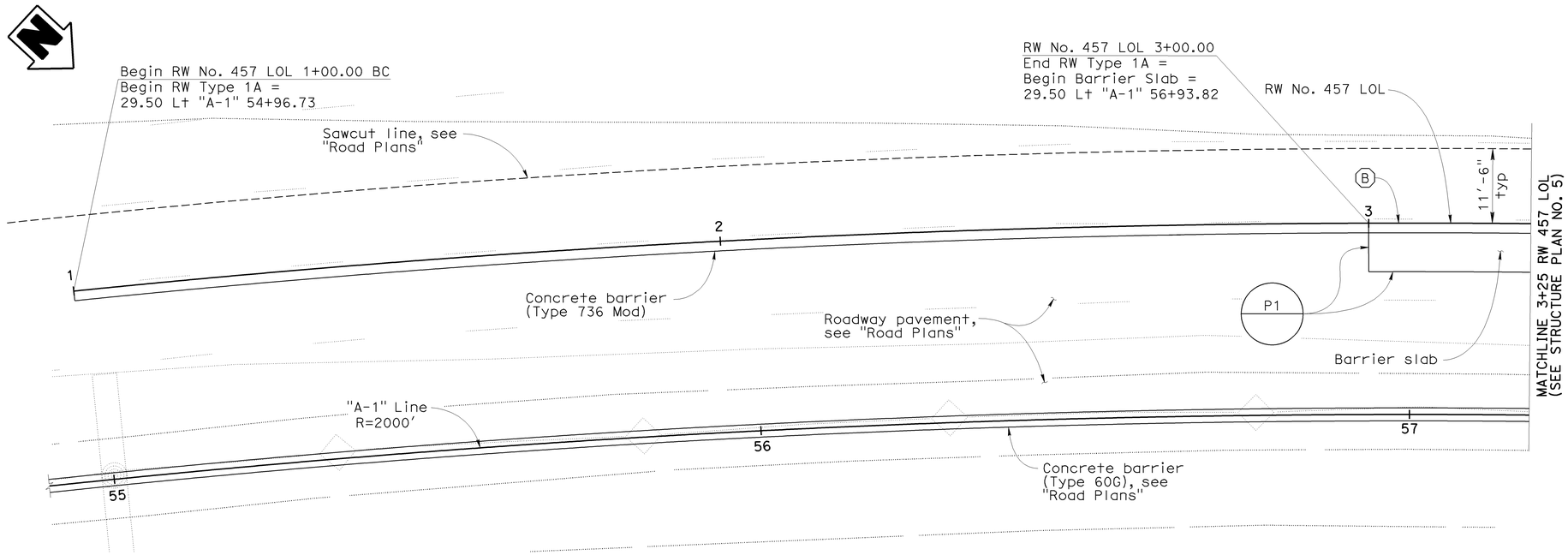

RW NO. 457 PLAN

1" = 10'

LEGEND

A — Indicates panel type designation (See Notes 1 & 2)

NOTES

1. For precast panel details, see "Panel Details No. 1" and "Panel Details No. 2" sheets
2. For architectural texture and details, see "Architectural Panel Layout No. 2" and "Architectural Details No. 1" thru "Architectural Details No. 3" sheets
3. For top of wall elevations within limits of precast panel wall, see "Wall Details No. 1" sheet
4. For connection details between precast concrete panels and concrete wall, see "Wall Details No. 2" sheet
5. For barrier slab details, see "Wall Details No. 1" sheet
6. Elevation shown at top of footing and top of leveling pad

CURVE DATA

NO.	R	Δ	T	L
B	2029.50'	18°12'33"	325.24'	645.00'

Sudhakar Vatti
DESIGN OVERSIGHT Sudhakar Vatti
8-10-09
SIGN OFF DATE

DESIGN DETAIL SHEET (ENGLISH) (REV. 2/25/05)

	BY	CHECKED
DESIGN	A. Priley	J. Hermstad
DETAILS	A. Priley	J. Hermstad
QUANTITIES	A. Priley	J. Wong

ORIGINAL SCALE IN INCHES FOR REDUCED PLANS 0 1 2 3

PREPARED FOR THE STATE OF CALIFORNIA DEPARTMENT OF TRANSPORTATION

A. Priley
PROJECT ENGINEER

CU 12235
EA 071631

BRIDGE NO. 55E0105
POST MILE 23.45

PRECAST WALLS NO. 456 & 457 WITH LIGHTWEIGHT FILL (CELLULAR CONCRETE)
STRUCTURE PLAN NO. 4

DISREGARD PRINTS BEARING EARLIER REVISION DATES
REVISION DATES (PRELIMINARY STAGE ONLY) 10/25/08 04/06/09 07/21/09

SHEET 9 OF 28

FILE => 55-e0105-c-sp04.dgn

USERNAME => trrstrk DATE PLOTTED => 04-FEB-2010 TIME PLOTTED => 10:31

DIST	COUNTY	ROUTE	POST MILES TOTAL PROJECT	SHEET No	TOTAL SHEETS
12	Ora	22,405, 605	R0.3/R0.9, 22.3/24.0,3.0/R1.6	1876	1929

REGISTERED CIVIL ENGINEER 07-27-09 DATE

2-1-10
PLANS APPROVAL DATE

REGISTERED PROFESSIONAL ENGINEER A. Priley No. C 73375 Exp. 12-31-10 CIVIL STATE OF CALIFORNIA

The State of California or its officers or agents shall not be responsible for the accuracy or completeness of electronic copies of this plan sheet.

OCTA
550 SOUTH MAIN STREET
ORANGE, CA 92863

TRC
21 TECHNOLOGY DR
IRVINE, CA 92618

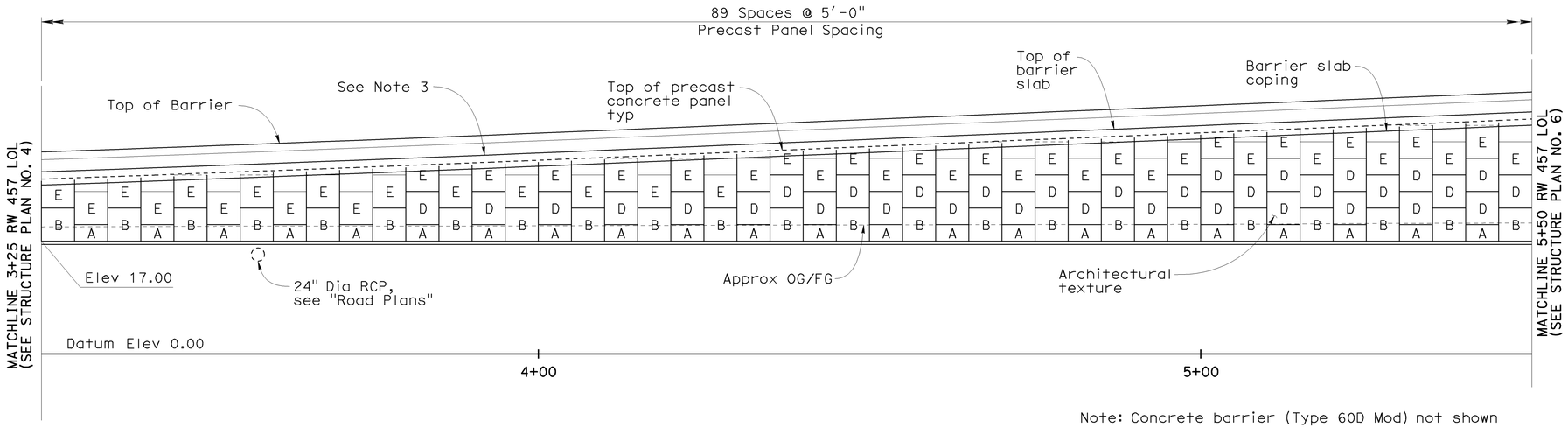

Note: Concrete barrier (Type 60D Mod) not shown

RW NO. 457
DEVELOPED MIRROR ELEVATION

1" = 10'

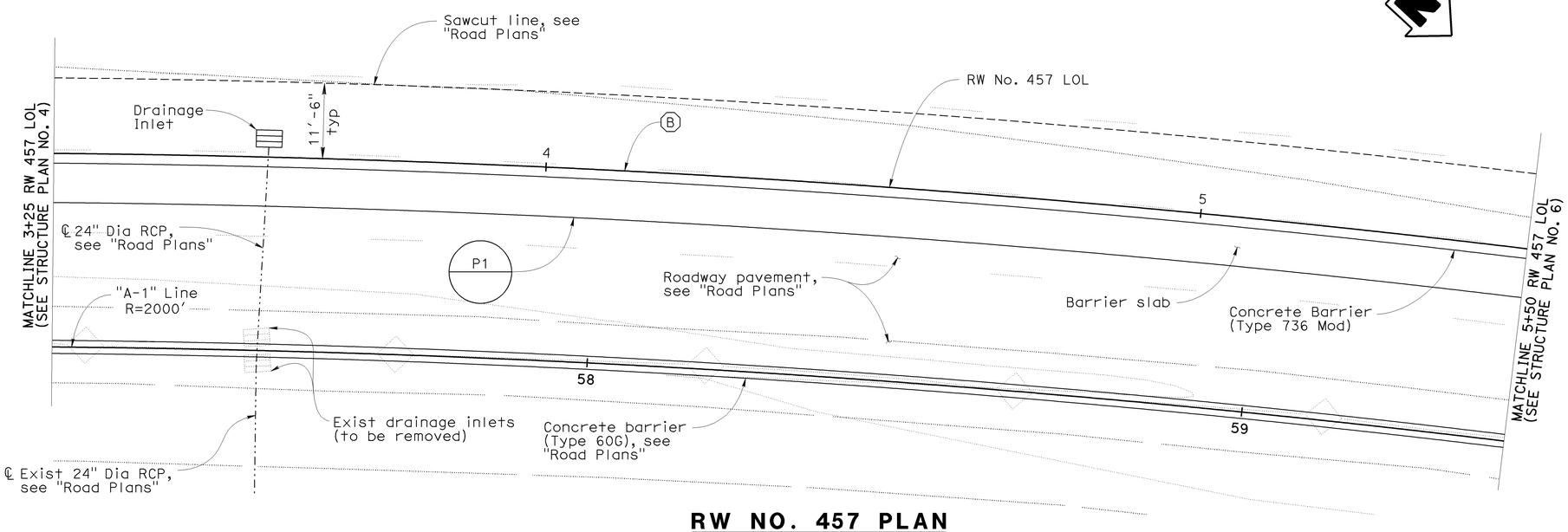

RW NO. 457 PLAN

1" = 10'

LEGEND

A	Indicates panel type designation (See Notes 1 & 2)

NOTES

1. For precast panel details, see "Panel Details No. 1" and "Panel Details No. 2" sheets
2. For architectural texture and details, see "Architectural Panel Layout No. 2" and "Architectural Details No. 1" thru "Architectural Details No. 3" sheets
3. For top of wall elevations within limits of precast panel wall, see "Wall Details No. 1" sheet
4. For barrier slab details, see "Wall Details No. 1" sheet
5. Elevation shown at top o f leveling pad

CURVE DATA

NO.	R	Δ	T	L
B	2029.50'	18°12'33"	325.24'	645.00'

Sudhakar Vatti
DESIGN OVERSIGHT Sudhakar Vatti
8-10-09
SIGN OFF DATE

DESIGN DETAIL SHEET (ENGLISH) (REV. 2/25/05)

	BY	CHECKED
DESIGN	A. Priley	J. Hermstad
DETAILS	A. Priley	J. Hermstad
QUANTITIES	A. Priley	J. Wong

ORIGINAL SCALE IN INCHES FOR REDUCED PLANS 0 1 2 3

PREPARED FOR THE STATE OF CALIFORNIA DEPARTMENT OF TRANSPORTATION

A. Priley
PROJECT ENGINEER

CU 12235
EA 071631

BRIDGE NO. 55E0105
POST MILE 23.45

PRECAST WALLS NO. 456 & 457 WITH LIGHTWEIGHT FILL (CELLULAR CONCRETE)
STRUCTURE PLAN NO. 5

DISREGARD PRINTS BEARING EARLIER REVISION DATES → REVISION DATES (PRELIMINARY STAGE ONLY) 10/25/08 04/06/09 07/21/09

SHEET 10 OF 28

FILE => 55-e0105-c-sp05.dgn

USERNAME => trrstrk DATE PLOTTED => 04-FEB-2010 TIME PLOTTED => 10:31

DIST	COUNTY	ROUTE	POST MILES TOTAL PROJECT	SHEET No	TOTAL SHEETS
12	Ora	22,405, 605	R0.3/R0.9, 22.3/24.0,3.0/R1.6	1877	1929

REGISTERED CIVIL ENGINEER 07-27-09 DATE

2-1-10
PLANS APPROVAL DATE

REGISTERED PROFESSIONAL ENGINEER A. Priley No. C 73375 Exp. 12-31-10 CIVIL STATE OF CALIFORNIA

The State of California or its officers or agents shall not be responsible for the accuracy or completeness of electronic copies of this plan sheet.

OCTA
550 SOUTH MAIN STREET
ORANGE, CA 92863

TRC
21 TECHNOLOGY DR
IRVINE, CA 92618

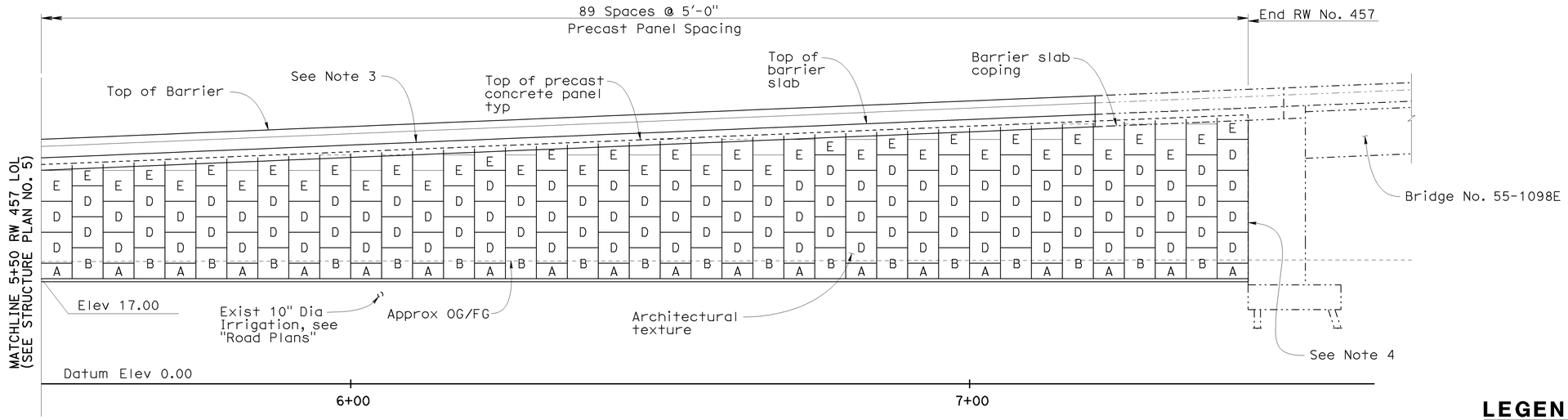

RW NO. 457
DEVELOPED MIRROR ELEVATION

1" = 10'

Note: Concrete barrier (Type 60D) and (Type 60D Mod) not shown

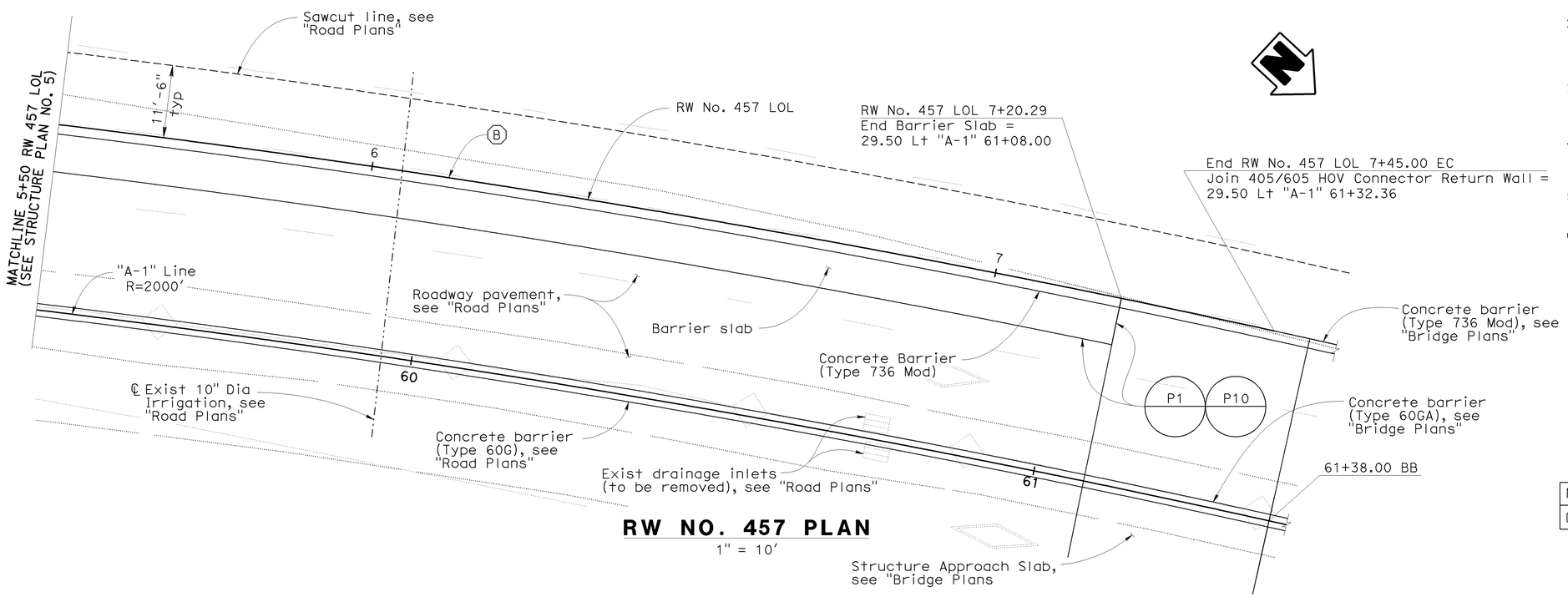

RW NO. 457 PLAN

1" = 10'

LEGEND

A — Indicates panel type designation (See Notes 1 & 2)

NOTES

1. For precast panel details, see "Panel Details No. 1" and "Panel Details No. 2" sheets
2. For architectural texture and details, see "Architectural Panel Layout No. 2" and "Architectural Details No. 1" thru "Architectural Details No. 3" sheets
3. For top of wall elevations within limits of precast panel wall, see "Wall Details No. 1" sheet
4. For connection details between precast concrete panels and concrete wall, see "Wall Details No. 2" sheet
5. For barrier slab details, see "Wall Details No. 1" sheet
6. Elevation shown at top of leveling pad

CURVE DATA

NO.	R	Δ	T	L
B	2029.50'	18°12'33"	325.24'	645.00'

Sudhakar Vatti
DESIGN OVERSIGHT Sudhakar Vatti
8-10-09
SIGN OFF DATE

DESIGN DETAIL SHEET (ENGLISH) (REV. 2/25/05)

	BY	CHECKED
DESIGN	A. Priley	J. Hermstad
DETAILS	A. Priley	J. Hermstad
QUANTITIES	A. Priley	J. Wong

ORIGINAL SCALE IN INCHES FOR REDUCED PLANS 0 1 2 3

PREPARED FOR THE STATE OF CALIFORNIA DEPARTMENT OF TRANSPORTATION

A. Priley
PROJECT ENGINEER

CU 12235
EA 071631

BRIDGE NO. 55E0105
POST MILE 23.45

PRECAST WALLS NO. 456 & 457 WITH LIGHTWEIGHT FILL (CELLULAR CONCRETE)
STRUCTURE PLAN NO. 6

DISREGARD PRINTS BEARING EARLIER REVISION DATES

REVISION DATES (PRELIMINARY STAGE ONLY) 10/15/08 04/06/09 07/27/09

SHEET 11 OF 28

FILE => 55-e0105-c-sp06.dgn

USERNAME => trstrk DATE PLOTTED => 04-FEB-2010 TIME PLOTTED => 10:31

DIST	COUNTY	ROUTE	POST MILES TOTAL PROJECT	SHEET No	TOTAL SHEETS
12	Ora	22,405, 605	R0.3/R0.9, 22.3/24.0,3.0/R1.6	1878	1929

REGISTERED CIVIL ENGINEER 07-27-09 DATE

2-1-10
PLANS APPROVAL DATE

REGISTERED PROFESSIONAL ENGINEER A. Priley No. C 73375 Exp. 12-31-10 CIVIL STATE OF CALIFORNIA

The State of California or its officers or agents shall not be responsible for the accuracy or completeness of electronic copies of this plan sheet.

OCTA
550 SOUTH MAIN STREET
ORANGE, CA 92863

TRC
21 TECHNOLOGY DR
IRVINE, CA 92618

NOTES

1. Place ½" x 1½" x 6" reinforced elastomeric bearing pads in all of the panel joints. Place one in each vertical joint at intersections with horizontal joints. Place two per panel in each horizontal joint. For additional information, see "Back Face of Wall Elevation" on "Panel Details No. 2" sheet
2. Top of Panels C and E shall be cast to conform to wall profile
3. Omit reinforcing studs and anchors when vertical spacing between threaded studs is less than 1'-0"
4. For reinforcing studs and cast-in-place anchor details see "Panel Details No. 2" sheet.
5. See "Horizontal Joint Detail" on "Panel Details No. 2" sheet
6. See "Vertical Joint Detail" on "Panel Details No. 2" sheet

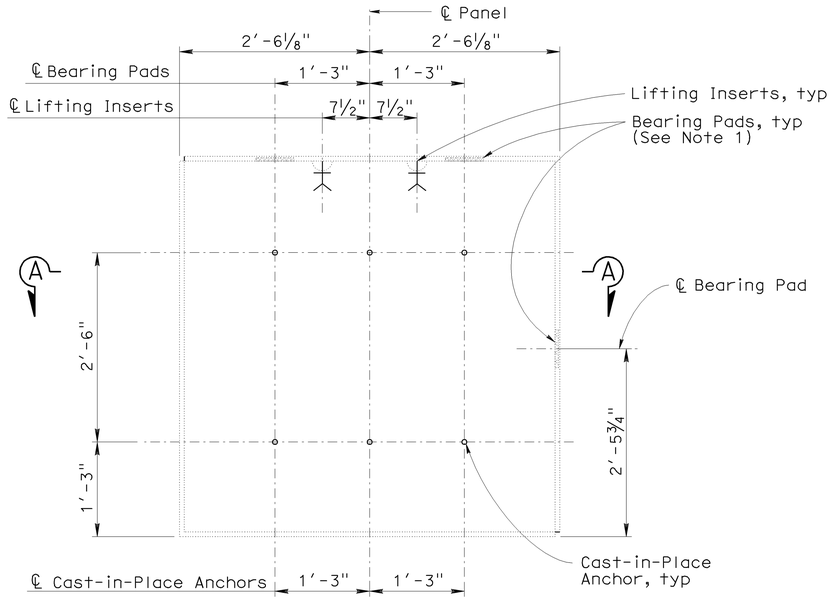

PANEL BACK FACE ELEVATION

1" = 1'-0"

(Panel D shown; other panels similar)

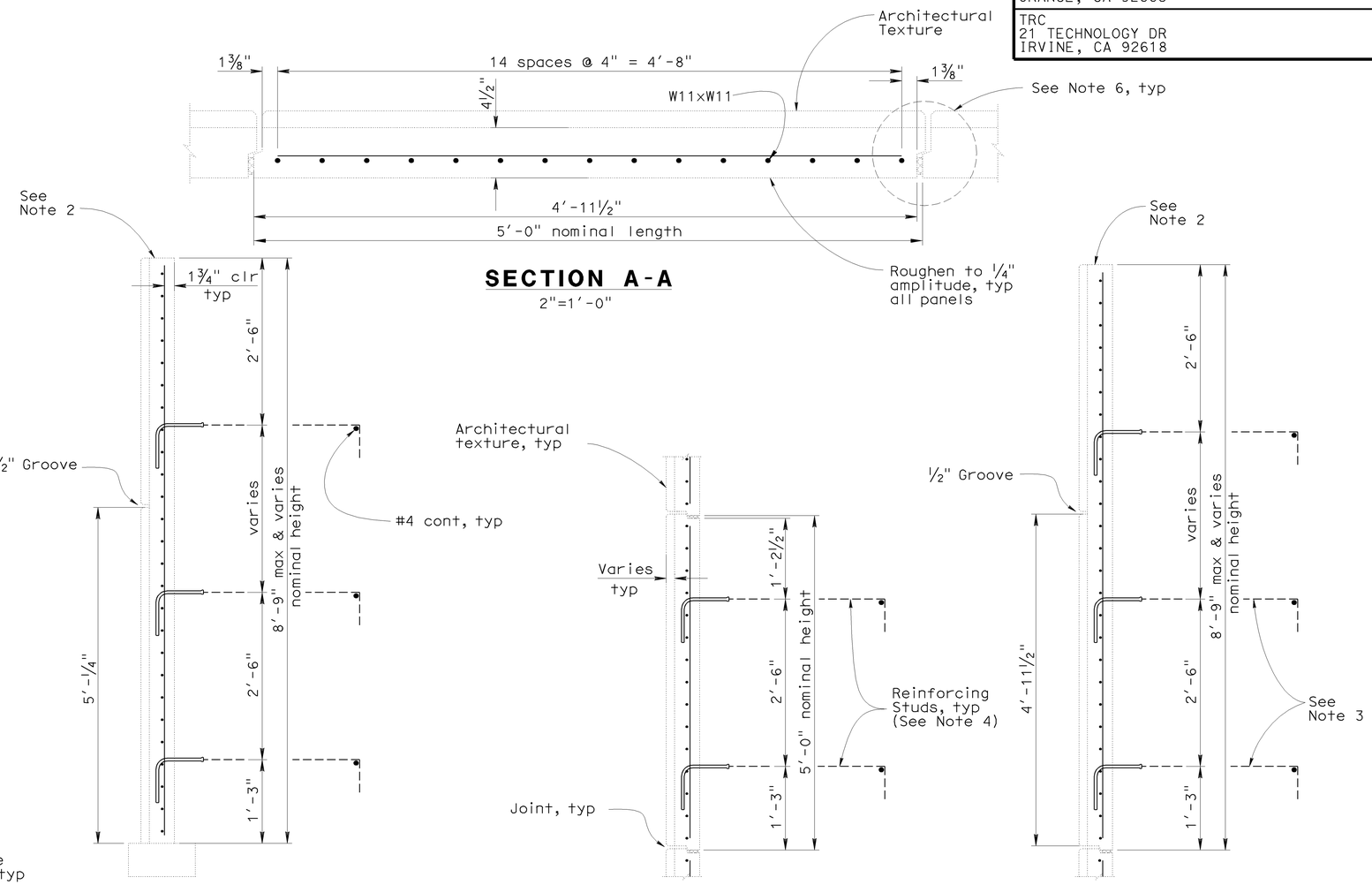

SECTION A-A

2"=1'-0"

PANEL A

PANEL B

PANEL C

PANEL D

PANEL E

PRECAST WALL PANEL SECTIONS

1" = 1'-0"

Sudhakar Vatti
DESIGN OVERSIGHT Sudhakar Vatti

8-10-09
SIGN OFF DATE

	BY	CHECKED
DESIGN	A. Priley	J. Hermstad
DETAILS	A. Priley	J. Hermstad
QUANTITIES	A. Priley	J. Wong

PREPARED FOR THE STATE OF CALIFORNIA DEPARTMENT OF TRANSPORTATION

A. Priley
PROJECT ENGINEER

BRIDGE NO. 55E0105
POST MILE 23.45

PRECAST WALLS NO. 456 & 457 WITH LIGHTWEIGHT FILL (CELLULAR CONCRETE)

PANEL DETAILS NO. 1

DESIGN DETAIL SHEET (ENGLISH) (REV. 2/25/05)

ORIGINAL SCALE IN INCHES FOR REDUCED PLANS 0 1 2 3

CU 12235
EA 071631

DISREGARD PRINTS BEARING EARLIER REVISION DATES

REVISION DATES (PRELIMINARY STAGE ONLY) 10/25/08 04/06/09 07/27/09

SHEET 12 OF 28

FILE => 55-e0105-f-pdt01.dgn

USERNAME => tresrtk DATE PLOTTED => 04-FEB-2010 TIME PLOTTED => 10:31

DIST	COUNTY	ROUTE	POST MILES TOTAL PROJECT	SHEET No	TOTAL SHEETS
12	Ora	22,405, 605	R0.3/R0.9, 22.3/24.0,3.0/R1.6	1879	1929

REGISTERED CIVIL ENGINEER 07-27-09 DATE

2-1-10
PLANS APPROVAL DATE

REGISTERED PROFESSIONAL ENGINEER A. Priley No. C 73375 Exp. 12-31-10 CIVIL STATE OF CALIFORNIA

The State of California or its officers or agents shall not be responsible for the accuracy or completeness of electronic copies of this plan sheet.

OCTA
550 SOUTH MAIN STREET
ORANGE, CA 92863

TRC
21 TECHNOLOGY DR
IRVINE, CA 92618

NOTES

1. For waterproofing membrane details, see "Drainage Details No. 2" sheet
2. Distance as required to permit coupler to be swaged
3. Extend #4 a minimum of 1'-0" beyond reinforcing stud at point where no longer required due to wall profile

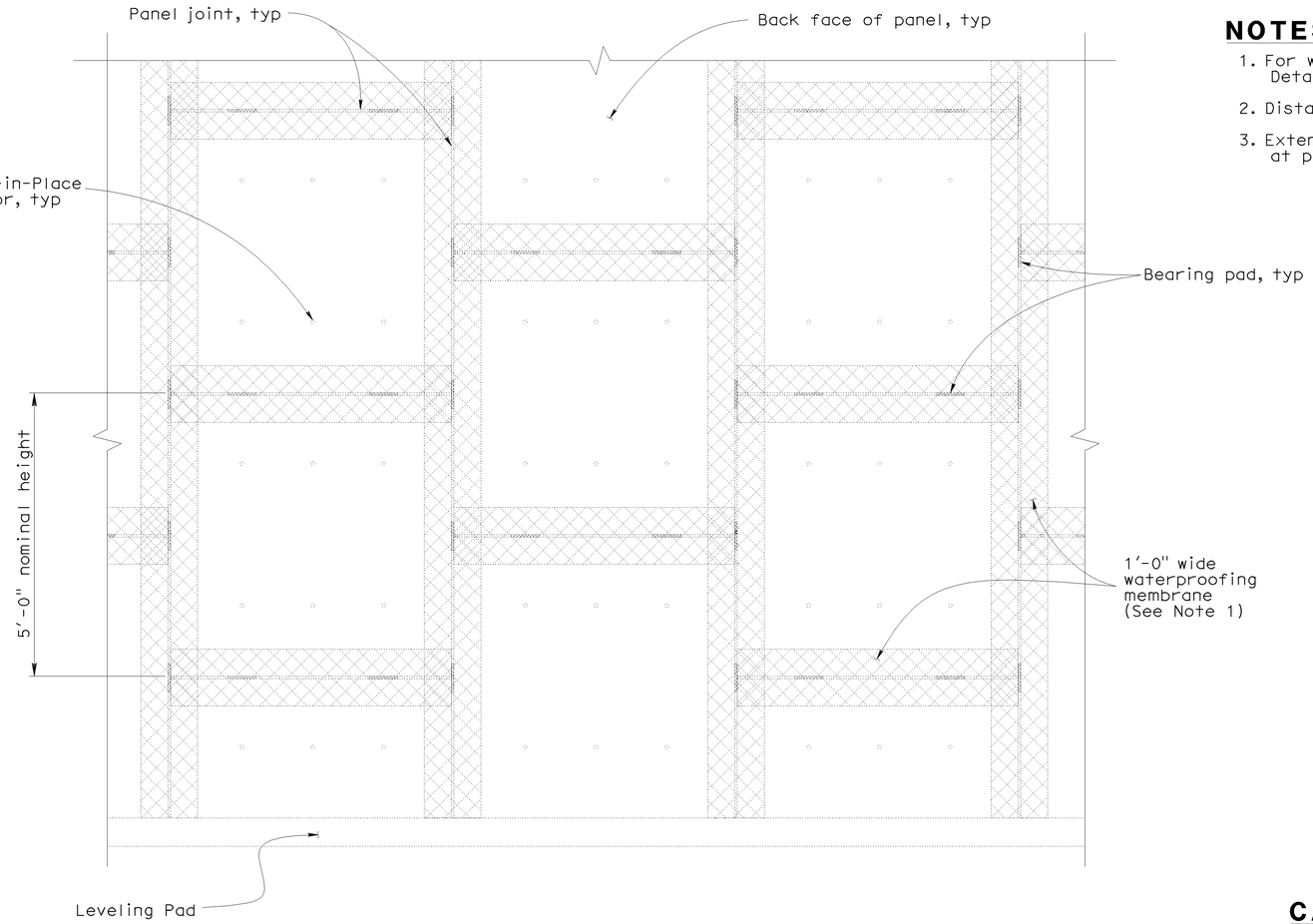

BACK FACE OF WALL ELEVATION

3/4" = 1'-0"

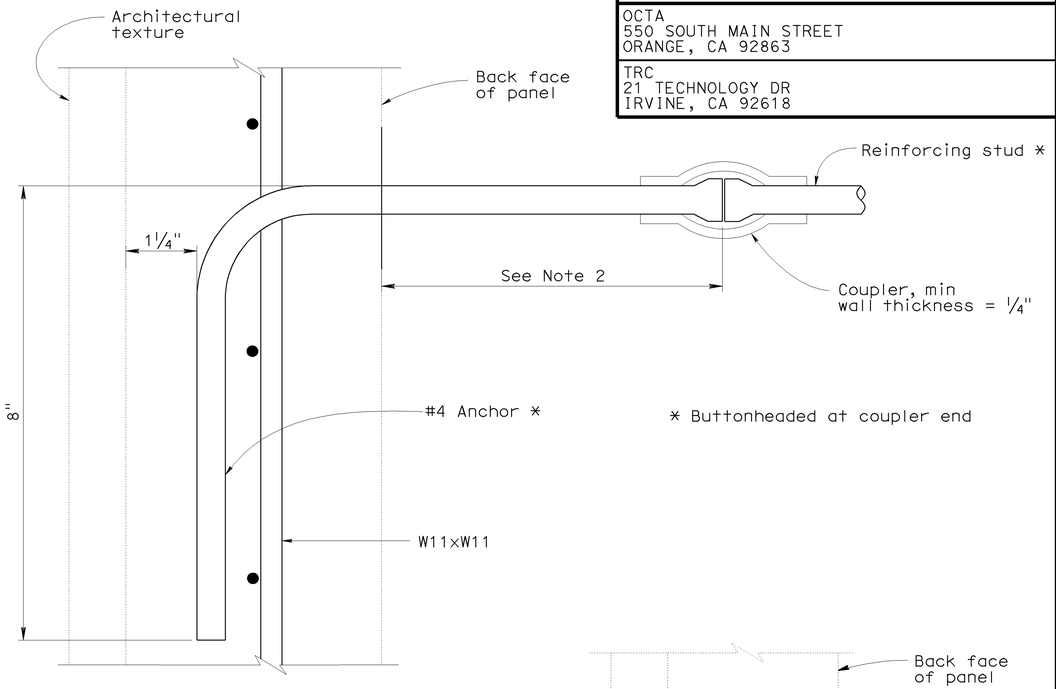

CAST-IN PLACE ANCHOR DETAILS

No Scale

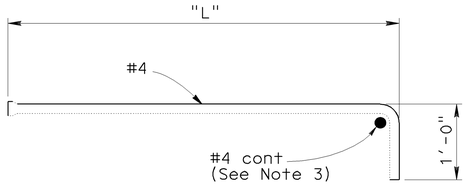

"L"	Station Limits	
	RW 456 LOL	RW 457 LOL
10'-0"	2+50 - 5+00	3+00 - 5+50
15'-0"	5+00 - 6+75	5+50 - 7+45

REINFORCING STUD DETAIL

No Scale

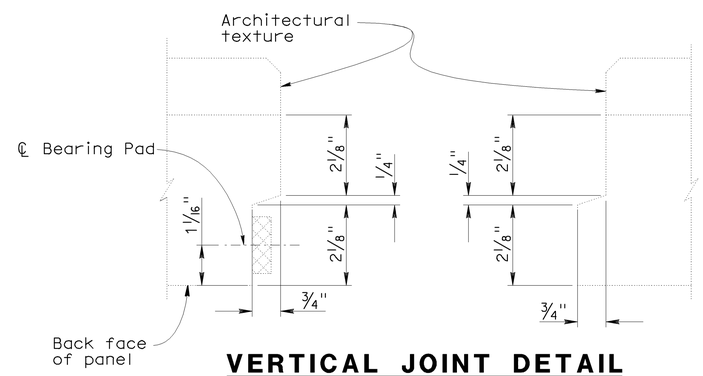

VERTICAL JOINT DETAIL

6" = 1'-0"

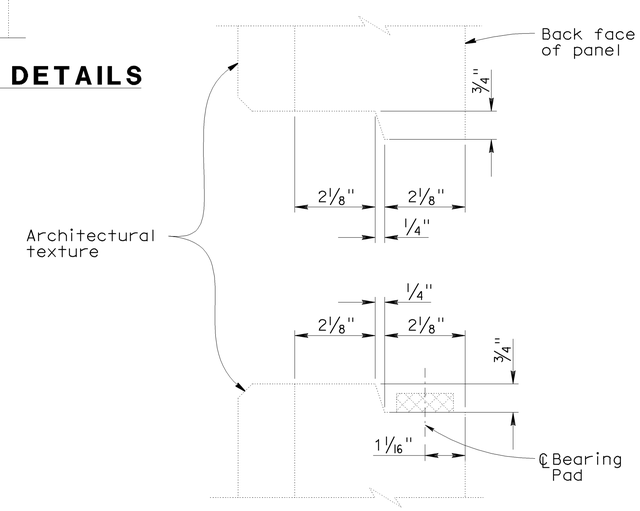

HORIZONTAL JOINT DETAIL

6" = 1'-0"

Sudhakar Vatti
DESIGN OVERSIGHT Sudhakar Vatti

8-10-09
SIGN OFF DATE

	BY	CHECKED
DESIGN	A. Priley	J. Hermstad
DETAILS	A. Priley	J. Hermstad
QUANTITIES	A. Priley	J. Wong

PREPARED FOR THE STATE OF CALIFORNIA DEPARTMENT OF TRANSPORTATION

A. Priley
PROJECT ENGINEER

BRIDGE NO. 55E0105
POST MILE 23.45

PRECAST WALLS NO. 456 & 457 WITH LIGHTWEIGHT FILL (CELLULAR CONCRETE)

PANEL DETAILS NO. 2

DESIGN DETAIL SHEET (ENGLISH) (REV. 2/25/05)

ORIGINAL SCALE IN INCHES FOR REDUCED PLANS 0 1 2 3

CU 12235
EA 071631

DISREGARD PRINTS BEARING EARLIER REVISION DATES

REVISION DATES (PRELIMINARY STAGE ONLY) 10/15/08 04/06/09 07/27/09

SHEET 13 OF 28

FILE => 55-e0105-f-pdt02.dgn

USERNAME => trsstrk DATE PLOTTED => 04-FEB-2010 TIME PLOTTED => 10:31

DIST	COUNTY	ROUTE	POST MILES TOTAL PROJECT	SHEET No	TOTAL SHEETS
12	Ora	22,405, 605	R0.3/R0.9, 22.3/24.0,3.0/R1.6	1880	1929

REGISTERED CIVIL ENGINEER 07-27-09 DATE

2-1-10
PLANS APPROVAL DATE

REGISTERED PROFESSIONAL ENGINEER A. Priley No. C 73375 Exp. 12-31-10 CIVIL STATE OF CALIFORNIA

The State of California or its officers or agents shall not be responsible for the accuracy or completeness of electronic copies of this plan sheet.

OCTA
550 SOUTH MAIN STREET
ORANGE, CA 92863

TRC
21 TECHNOLOGY DR
IRVINE, CA 92618

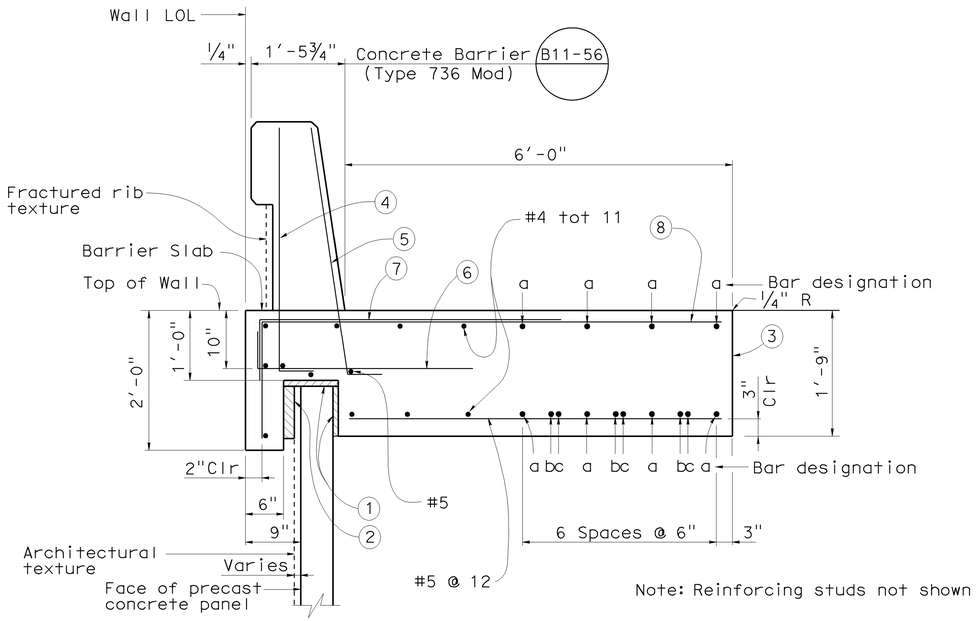

SECTION AT TOP OF WALL WITH BARRIER SLAB AND CONCRETE BARRIER

No Scale

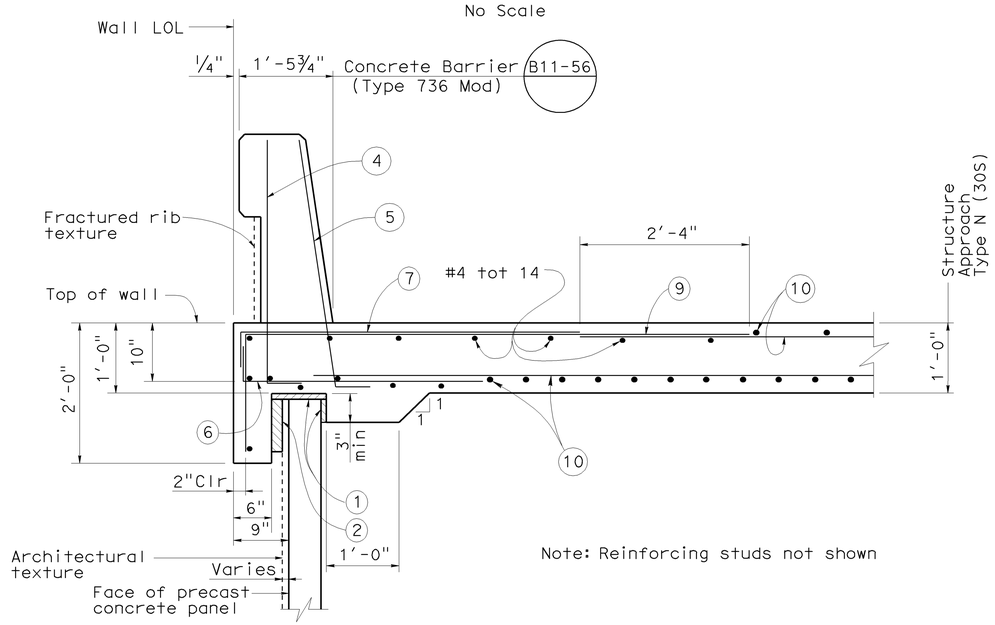

SECTION AT TOP OF WALL WITH STRUCTURE APPROACH SLAB AND CONCRETE BARRIER

No Scale

TOP OF WALL ELEVATIONS

RW NO. 456

RW 456 LOL Station	Top of Wall Elevation (ft)
2+50.00	23.31
2+62.50	23.75
2+75.00	24.20
2+87.50	24.67
3+00.00	25.15
3+12.50	25.64
3+25.00	26.15
3+37.50	26.66
3+50.00	27.18
3+62.50	27.72
3+75.00	28.25
3+87.50	28.78
4+00.00	29.32
4+12.50	29.85
4+25.00	30.38
4+37.50	30.91
4+50.00	31.45
4+62.50	31.98
4+75.00	32.51
4+87.50	33.04
5+00.00	33.57
5+12.50	34.10
5+25.00	34.64
5+37.50	35.17
5+50.00	35.70
5+62.50	36.23
5+75.00	36.77
5+87.50	37.30
6+00.00	37.83
6+12.50	38.36
6+25.00	38.90
6+37.50	39.43
6+50.00	39.95
6+62.50	40.49
6+75.00	41.03

RW NO. 457

RW 457 LOL Station	Top of Wall Elevation (ft)
3+00.00	26.61
3+12.50	27.03
3+25.00	27.47
3+37.50	27.91
3+50.00	28.37
3+62.50	28.84
3+75.00	29.32
3+87.50	29.81
4+00.00	30.32
4+12.50	30.83
4+25.00	31.34
4+37.50	31.86
4+50.00	32.38
4+62.50	32.90
4+75.00	33.41
4+87.50	33.93
5+00.00	34.45
5+12.50	34.97
5+25.00	35.48
5+37.50	36.00
5+50.00	36.52
5+62.50	37.03
5+75.00	37.54
5+87.50	38.06
6+00.00	38.58
6+12.50	39.09
6+25.00	39.61
6+37.50	40.13
6+50.00	40.65
6+62.50	41.16
6+75.00	41.68
6+87.50	42.20
7+00.00	42.72
7+12.50	43.22
7+25.00	43.74
7+37.50	44.26
7+45.00	44.58

LEGEND

"a" bar = #6 continuous.
"b" bar = #6 X 59'-0"
"c" bar = #6 X 49'-2"

Place "b" and "c" bars at beginning and ending ends of barrier slab

(1) 1" Expanded polystyrene

(2) 1½" - 3" Expanded polystyrene. Recess expanded polystyrene 2" into coping

(3) Contact joint

(4) #5 6¼" @ 16 (To be in place prior to barrier slab or approach slab concrete)

(5) #5 6¼" @ 8 (To be in place prior to barrier slab or approach slab concrete)

(6) #5 6¼" 3'-4" @ 12

(7) #5 4'-7" @ 12 bundled with (8) or (9) bars

(8) #5 7'-2" @ 12

(9) #5 6'-10⅝" @ 12

(10) Approach slab reinforcement

NOTES

1. Clearance to reinforcing steel in concrete barrier to be 1"
2. Not all barrier reinforcement shown
3. No expansion joints in concrete barrier or barrier slab within limits of precast walls with lightweight fill (Cellular concrete)
4. For drainage details beneath barrier slab and approach slab, see "Drainage Details No. 1" through "Drainage Details No. 3" sheets

Sudhakar Vatti
DESIGN OVERSIGHT Sudhakar Vatti

8-10-09
SIGN OFF DATE

	BY	CHECKED
DESIGN	A. Priley	J. Hermstad
DETAILS	A. Priley	J. Hermstad
QUANTITIES	A. Priley	J. Wong

PREPARED FOR THE STATE OF CALIFORNIA DEPARTMENT OF TRANSPORTATION

A. Priley
PROJECT ENGINEER

BRIDGE NO. 55E0105
POST MILE 23.45

PRECAST WALLS NO. 456 & 457 WITH LIGHTWEIGHT FILL (CELLULAR CONCRETE)

WALL DETAILS NO. 1

DESIGN DETAIL SHEET (ENGLISH) (REV. 2/25/05)

ORIGINAL SCALE IN INCHES FOR REDUCED PLANS 0 1 2 3

CU 12235
EA 071631

DISREGARD PRINTS BEARING EARLIER REVISION DATES → 10/05/08 04/06/09 07/27/09

REVISION DATES (PRELIMINARY STAGE ONLY)

SHEET 14 OF 28

FILE => 55-e0105-g-wdt01.dgn

USERNAME => trsitrk DATE PLOTTED => 04-FEB-2010 TIME PLOTTED => 10:31

DIST	COUNTY	ROUTE	POST MILES TOTAL PROJECT	SHEET No	TOTAL SHEETS
12	Ora	22,405, 605	R0.3/R0.9, 22.3/24.0,3.0/R1.6	1881	1929

REGISTERED CIVIL ENGINEER 07-27-09 DATE

2-1-10
PLANS APPROVAL DATE

REGISTERED PROFESSIONAL ENGINEER A. Priley No. C 73375 Exp. 12-31-10 CIVIL STATE OF CALIFORNIA

The State of California or its officers or agents shall not be responsible for the accuracy or completeness of electronic copies of this plan sheet.

OCTA
550 SOUTH MAIN STREET
ORANGE, CA 92863

TRC
21 TECHNOLOGY DR
IRVINE, CA 92618

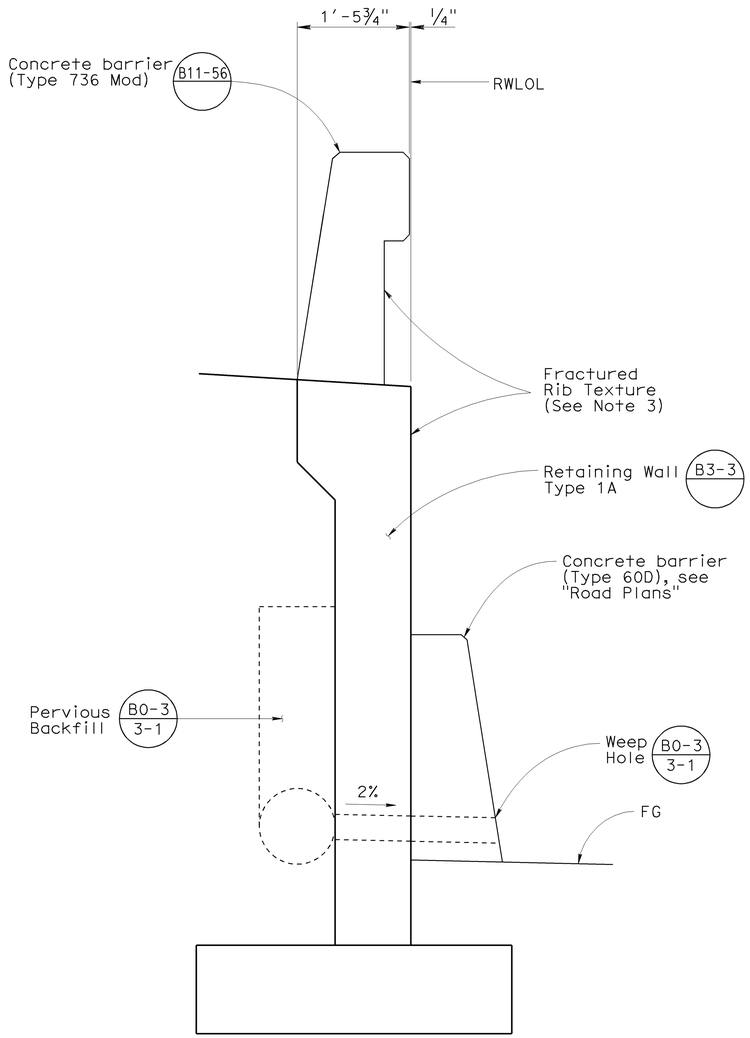

RETAINING WALL DETAILS

No Scale

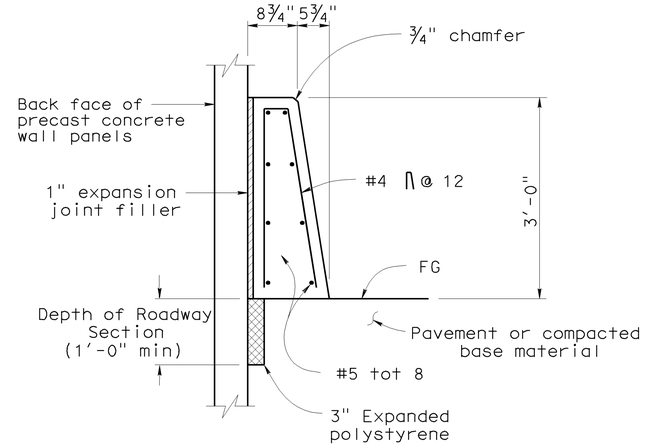

CONCRETE BARRIER TYPE 60D (MOD) AT FACE OF PRECAST WALL

No Scale

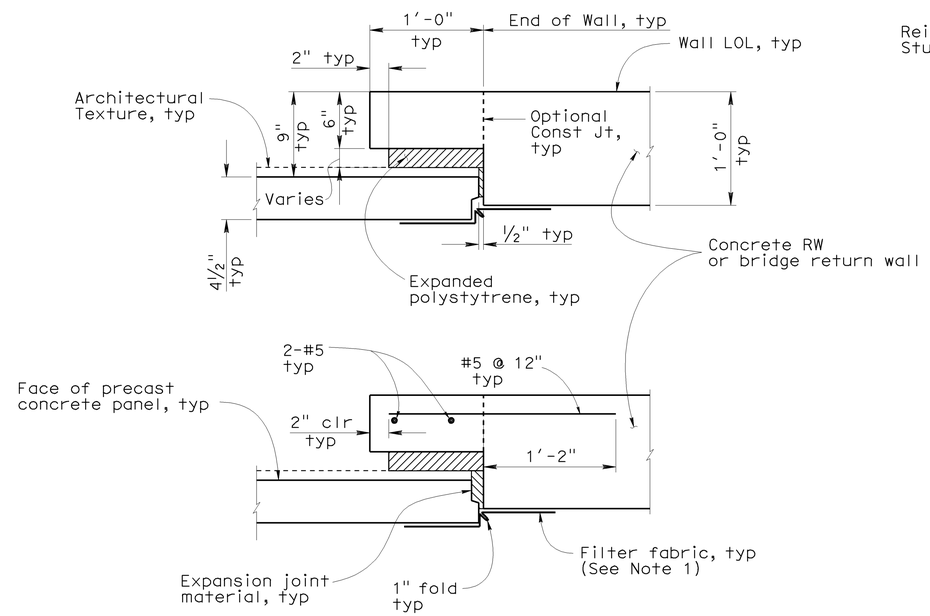

PRECAST PANEL TO CONCRETE WALL JOINT DETAILS

No Scale

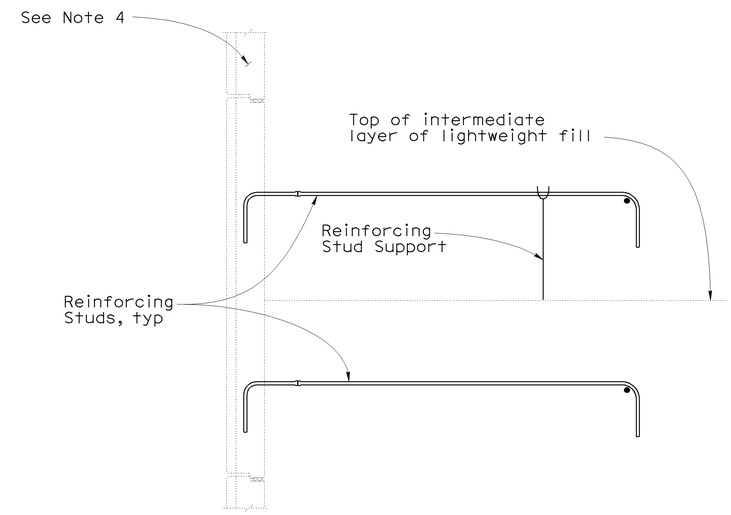

REINFORCING STUD SUPPORT DETAIL

No Scale

NOTES

1. Bond a strip of filter fabric, 1'-6" wide, to back of precast concrete panels and the adjacent concrete wall for entire length of vertical joint
2. Bond expansion joint material to the concrete wall
3. For fractured rib texture and details, see "Architectural Panel Layout No. 1", "Architectural Panel Layout No. 2", and "Architectural Details No. 1" thru "Architectural Details No. 3" sheets
4. For panel details and information, see "Panel Details No. 1" and "Panel Details No. 2" sheets

Sudhakar Vatti
DESIGN OVERSIGHT Sudhakar Vatti
8-10-09
SIGN OFF DATE

	BY	CHECKED
DESIGN	A. Priley	J. Hermstad
DETAILS	A. Priley	J. Hermstad
QUANTITIES	A. Priley	J. Wong

PREPARED FOR THE STATE OF CALIFORNIA DEPARTMENT OF TRANSPORTATION

A. Priley
PROJECT ENGINEER

BRIDGE NO. 55E0105
POST MILE 23.45

PRECAST WALLS NO. 456 & 457 WITH LIGHTWEIGHT FILL (CELLULAR CONCRETE)

WALL DETAILS NO. 2

DESIGN DETAIL SHEET (ENGLISH) (REV. 2/25/05)

ORIGINAL SCALE IN INCHES FOR REDUCED PLANS 0 1 2 3

CU 12235
EA 071631

DISREGARD PRINTS BEARING EARLIER REVISION DATES

REVISION DATES (PRELIMINARY STAGE ONLY) 10/25/08 04/06/09 01/27/09

SHEET 15 OF 28

FILE => 55-e0105-g-wdt02.dgn

USERNAME => trmnguye DATE PLOTTED => 04-FEB-2010 TIME PLOTTED => 10:36

DIST	COUNTY	ROUTE	POST MILES TOTAL PROJECT	SHEET No	TOTAL SHEETS
12	Ora	22,405, 605	R0.3/R0.9, 22.3/24.0,3.0/R1.6	1882	1929

REGISTERED CIVIL ENGINEER 07-27-09 DATE

2-1-10
PLANS APPROVAL DATE

REGISTERED PROFESSIONAL ENGINEER A. Priley No. C 73375 Exp. 12-31-10 CIVIL STATE OF CALIFORNIA

The State of California or its officers or agents shall not be responsible for the accuracy or completeness of electronic copies of this plan sheet.

OCTA
550 SOUTH MAIN STREET
ORANGE, CA 92863

TRC
21 TECHNOLOGY DR
IRVINE, CA 92618

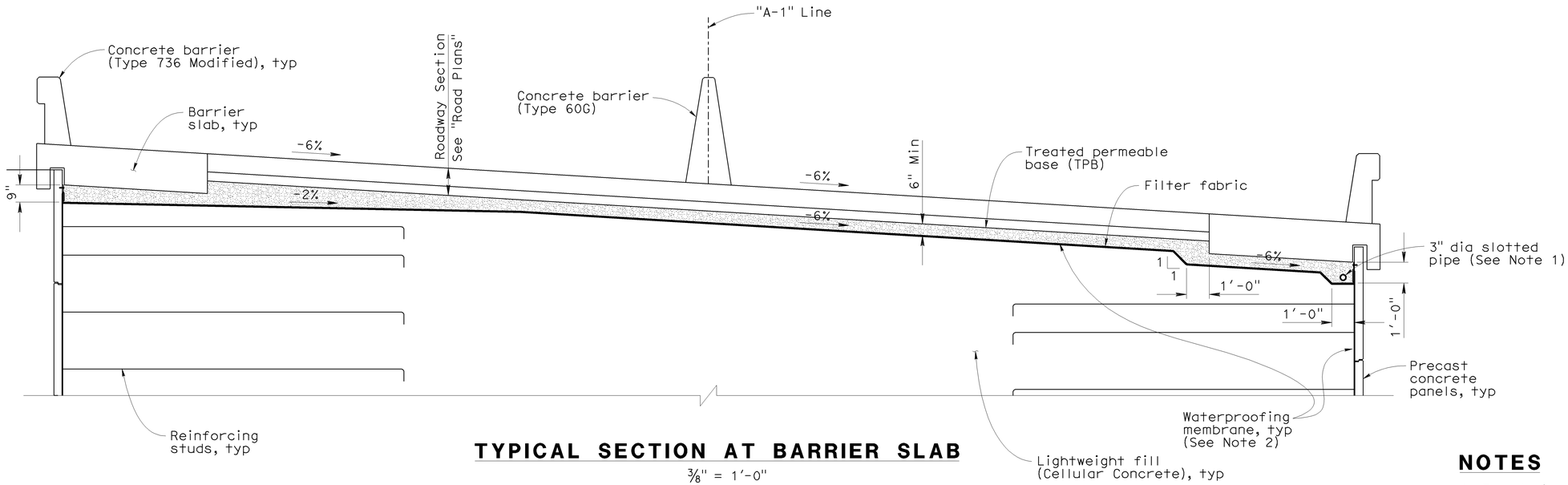

TYPICAL SECTION AT BARRIER SLAB

3/8" = 1'-0"

NOTES

1. For drainage details under barrier slab and approach slab, see "Drainage Details No. 2" and "Drainage Details No. 3" sheets
2. For waterproofing membrane details, see "Drainage Details No. 2" sheet
3. Architectural texture not shown

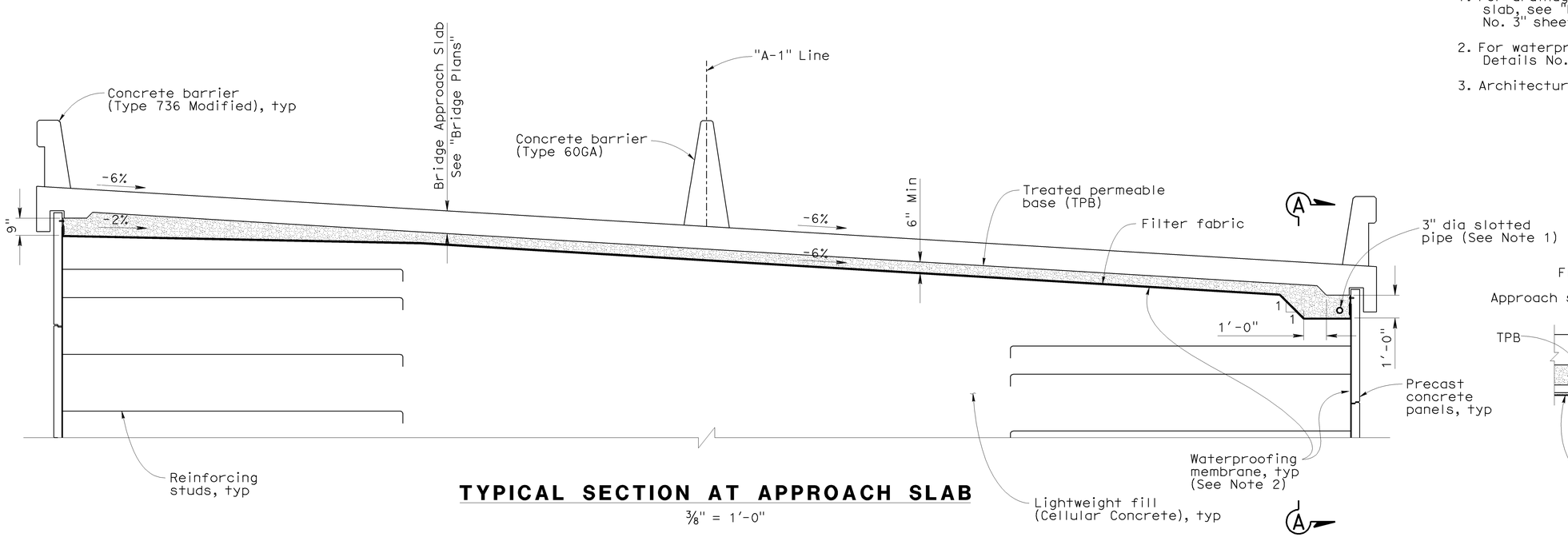

TYPICAL SECTION AT APPROACH SLAB

3/8" = 1'-0"

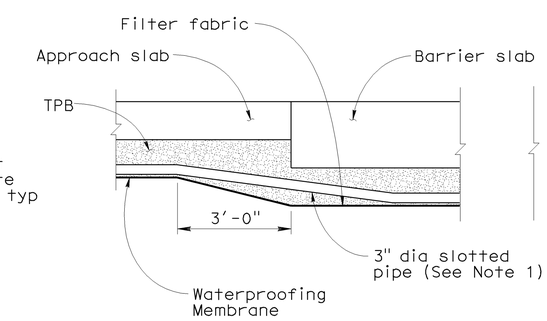

SECTION A-A

No Scale

Sudhakar Vatti
DESIGN OVERSIGHT Sudhakar Vatti
8-10-09
SIGN OFF DATE

	BY	CHECKED
DESIGN	A. Priley	J. Hermstad
DETAILS	A. Priley	J. Hermstad
QUANTITIES	A. Priley	J. Wong

PREPARED FOR THE STATE OF CALIFORNIA DEPARTMENT OF TRANSPORTATION

A. Priley
PROJECT ENGINEER

BRIDGE NO. 55E0105
POST MILE 23.45

PRECAST WALLS NO. 456 & 457 WITH LIGHTWEIGHT FILL (CELLULAR CONCRETE)

DRAINAGE DETAILS NO. 1

DESIGN DETAIL SHEET (ENGLISH) (REV. 2/25/05)

ORIGINAL SCALE IN INCHES FOR REDUCED PLANS 0 1 2 3

CU 12235
EA 071631

DISREGARD PRINTS BEARING EARLIER REVISION DATES

REVISION DATES (PRELIMINARY STAGE ONLY) 10/25/08 04/06/09 07/21/09

SHEET 16 OF 28

FILE => 55-e0105-r-drn01.dgn

USERNAME => trmmguye DATE PLOTTED => 04-FEB-2010 TIME PLOTTED => 10:36

DIST	COUNTY	ROUTE	POST MILES TOTAL PROJECT	SHEET No	TOTAL SHEETS
12	Ora	22,405, 605	R0.3/R0.9, 22.3/24.0,3.0/R1.6	1883	1929

REGISTERED CIVIL ENGINEER 07-27-09 DATE

2-1-10
PLANS APPROVAL DATE

REGISTERED PROFESSIONAL ENGINEER A. Priley No. C 73375 Exp. 12-31-10 CIVIL STATE OF CALIFORNIA

The State of California or its officers or agents shall not be responsible for the accuracy or completeness of electronic copies of this plan sheet.

OCTA
550 SOUTH MAIN STREET
ORANGE, CA 92863

TRC
21 TECHNOLOGY DR
IRVINE, CA 92618

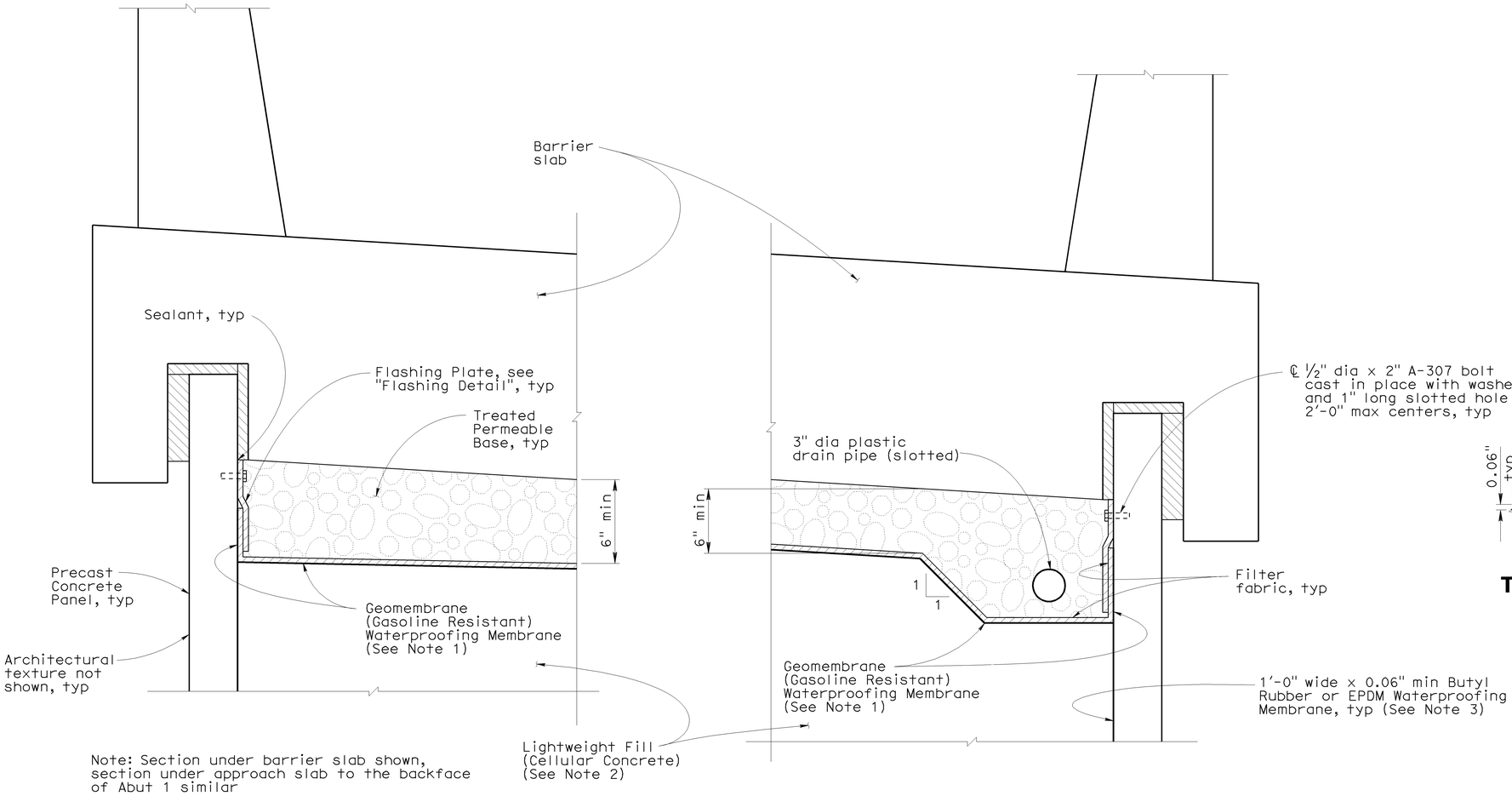

Note: Section under barrier slab shown, section under approach slab to the backface of Abut 1 similar

WATERPROOFING DETAIL

No Scale

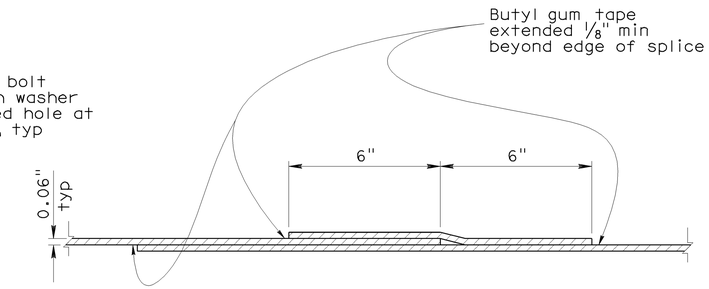

TONGUE AND GROOVE - FIELD SPLICE

BUTYL RUBBER MEMBRANE OR EPDM SPLICE DETAIL

No Scale

NOTES

1. Secure Geomembrane (Gasoline Resistant) Waterproofing Membrane to the precast panel or bridge return wall with approved adhesive
2. Lightweight Fill (Cellular Concrete) surface shall have smooth even finish and shall be clean and free from depressions, ridges, projections and sharp objects
3. Bond 1'-0" wide x 0.06" min butyl rubber or EPDM waterproofing membrane to adjacent panels over the full length of all vertical and horizontal panel joints. Terminate vertical waterproofing at Geomembrane. See "Panel Details No. 1" sheet for elevation view

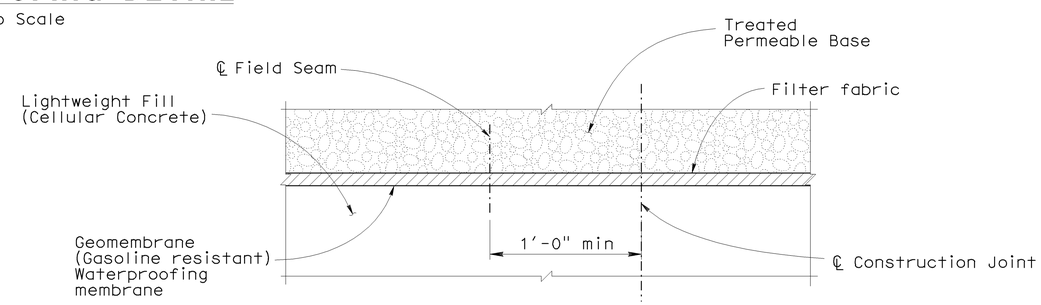

SECTION AT CONTROLLED JOINT

No Scale

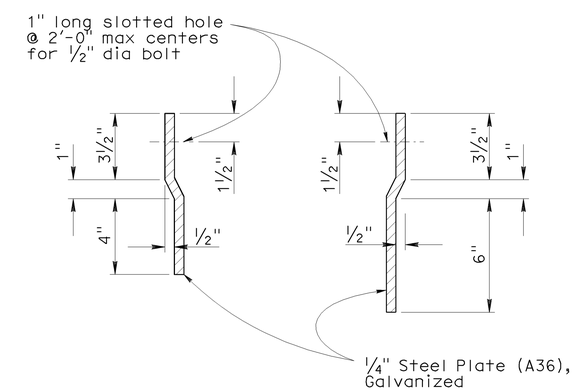

FLASHING DETAIL

No Scale

Sudhakar Vatti
DESIGN OVERSIGHT Sudhakar Vatti
8-10-09
SIGN OFF DATE

	BY	CHECKED
DESIGN	A. Priley	J. Hermstad
DETAILS	A. Priley	J. Hermstad
QUANTITIES	A. Priley	J. Wong

PREPARED FOR THE STATE OF CALIFORNIA DEPARTMENT OF TRANSPORTATION

A. Priley
PROJECT ENGINEER

BRIDGE NO. 55E0105
POST MILE 23.45

PRECAST WALLS NO. 456 & 457 WITH LIGHTWEIGHT FILL (CELLULAR CONCRETE)

DRAINAGE DETAILS NO. 2

DESIGN DETAIL SHEET (ENGLISH) (REV. 2/25/05)

ORIGINAL SCALE IN INCHES FOR REDUCED PLANS 0 1 2 3

CU 12235
EA 071631

DISREGARD PRINTS BEARING EARLIER REVISION DATES

REVISION DATES (PRELIMINARY STAGE ONLY) 10/25/08 04/06/09 07/27/09

SHEET 17 OF 28

FILE => 55-e0105-r-drn02.dgn

USERNAME => trmnguye DATE PLOTTED => 04-FEB-2010 TIME PLOTTED => 10:37

DIST	COUNTY	ROUTE	POST MILES TOTAL PROJECT	SHEET No	TOTAL SHEETS
12	Ora	22,405, 605	R0.3/R0.9, 22.3/24.0,3.0/R1.6	1884	1929

REGISTERED CIVIL ENGINEER 07-27-09 DATE

2-1-10
PLANS APPROVAL DATE

REGISTERED PROFESSIONAL ENGINEER A. Priley No. C 73375 Exp. 12-31-10 CIVIL STATE OF CALIFORNIA

The State of California or its officers or agents shall not be responsible for the accuracy or completeness of electronic copies of this plan sheet.

OCTA
550 SOUTH MAIN STREET
ORANGE, CA 92863

TRC
21 TECHNOLOGY DR
IRVINE, CA 92618

Note: Concrete Barrier (Type 60D Mod) not shown

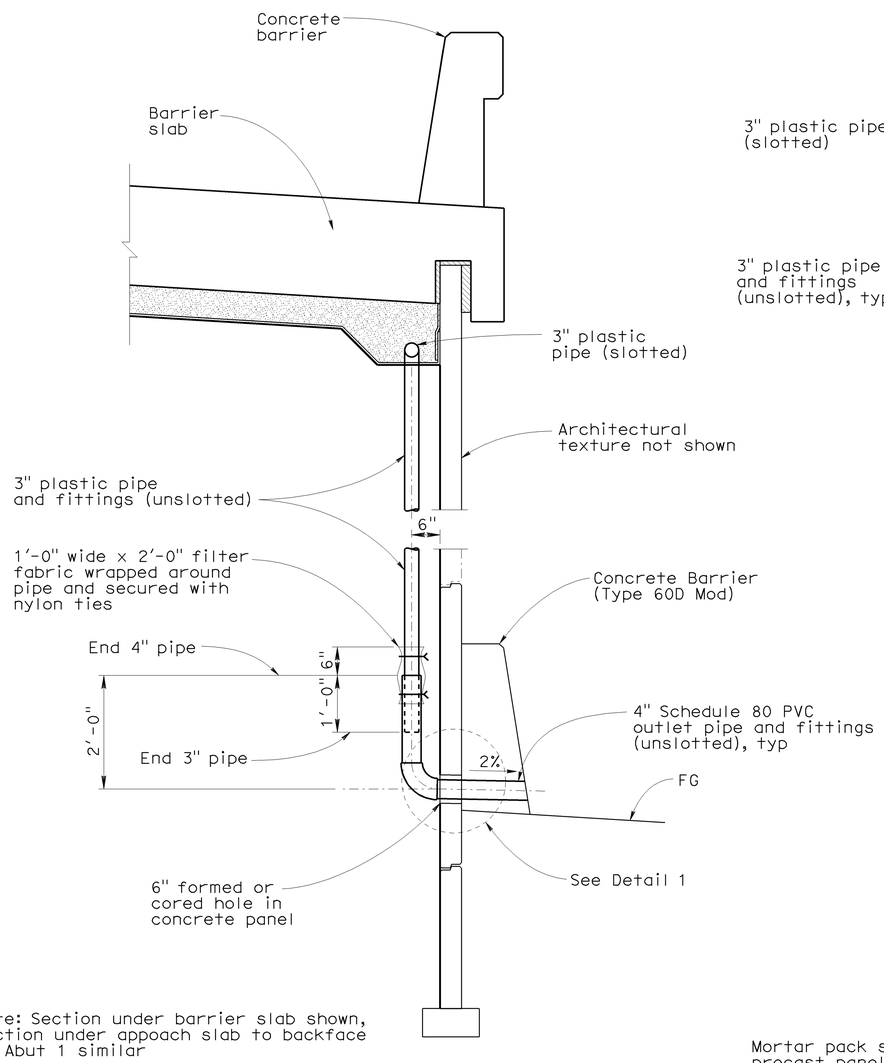

Note: Section under barrier slab shown, section under appoach slab to backface of Abut 1 similar

SECTION B-B

3/4" = 1'-0"

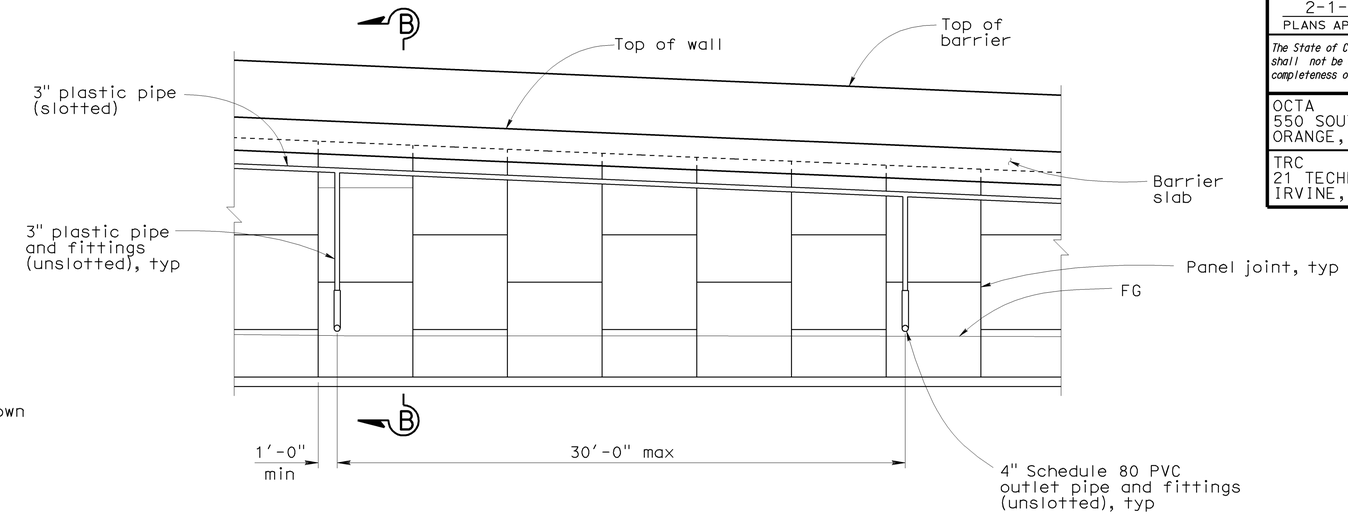

REAR ELEVATION

1/4" = 1'-0"

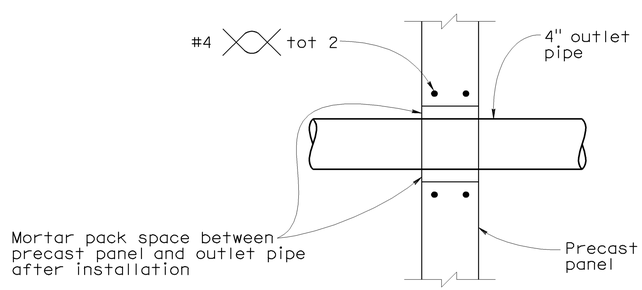

SECTION

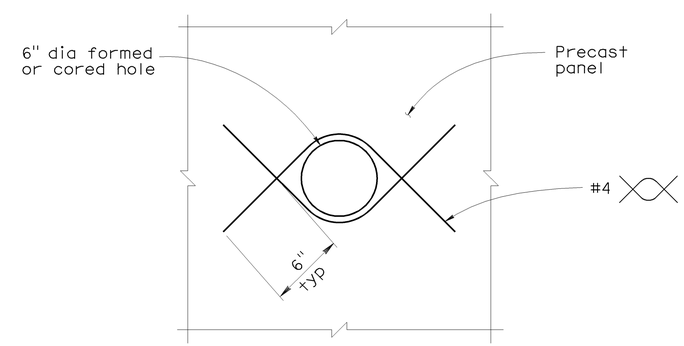

ELEVATION

DETAIL 1

No Scale

Sudhakar Vatti
DESIGN OVERSIGHT Sudhakar Vatti

8-10-09
SIGN OFF DATE

	BY	CHECKED
DESIGN	A. Priley	J. Hermstad
DETAILS	A. Priley	J. Hermstad
QUANTITIES	A. Priley	J. Wong

PREPARED FOR THE STATE OF CALIFORNIA DEPARTMENT OF TRANSPORTATION

A. Priley
PROJECT ENGINEER

BRIDGE NO. 55E0105
POST MILE 23.45

PRECAST WALLS NO. 456 & 457 WITH LIGHTWEIGHT FILL (CELLULAR CONCRETE)

DRAINAGE DETAILS NO. 3

DESIGN DETAIL SHEET (ENGLISH) (REV. 2/25/05)

ORIGINAL SCALE IN INCHES FOR REDUCED PLANS 0 1 2 3

CU 12235
EA 071631

DISREGARD PRINTS BEARING EARLIER REVISION DATES

REVISION DATES (PRELIMINARY STAGE ONLY) 10/25/08 04/06/09 07/27/09

SHEET 18 OF 28

FILE => 55-e0105-r-drn03.dgn

USERNAME => trmnguye DATE PLOTTED => 04-FEB-2010 TIME PLOTTED => 10:37

DIST	COUNTY	ROUTE	POST MILES TOTAL PROJECT	SHEET No	TOTAL SHEETS
12	Ora	22, 405, 605	R0.3/R0.9, 22.3/24.0,3.0/R1.6	1885	1929

LICENSED LANDSCAPE ARCHITECT

2-1-10
PLANS APPROVAL DATE

LICENSED LANDSCAPE ARCHITECT CATHY L. JOHNSON NO. 4545 STATE OF CALIFORNIA
01-31-10
Renewal Date
07-27-09
Date

The State of California or its officers or agents shall not be responsible for the accuracy or completeness of electronic copies of this plan sheet.

OCTA
550 SOUTH MAIN STREET
ORANGE, CA 92863

RBF CONSULTING
14725 ALTON PARKWAY
IRVINE, CA 92618

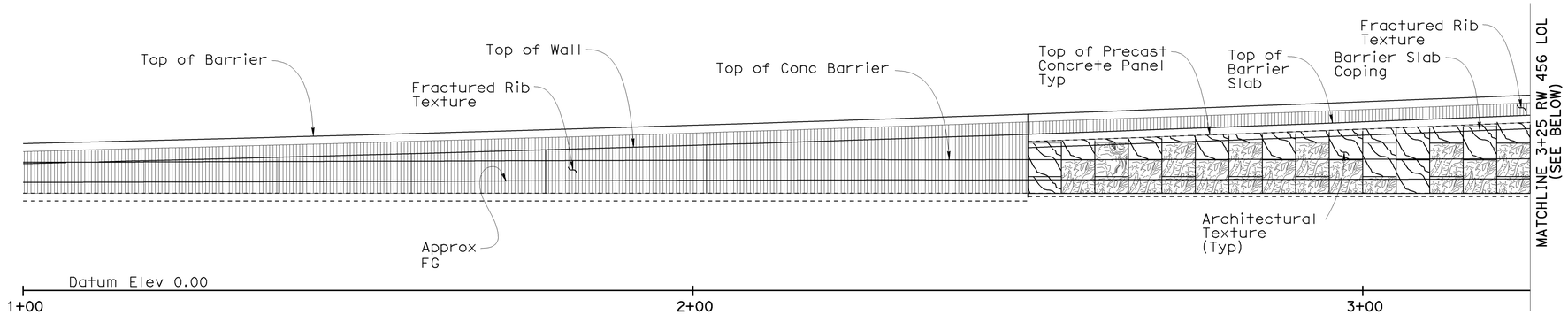

RW NO. 456 DEVELOPED ELEVATION (SEGMENT 1)

1" = 10'

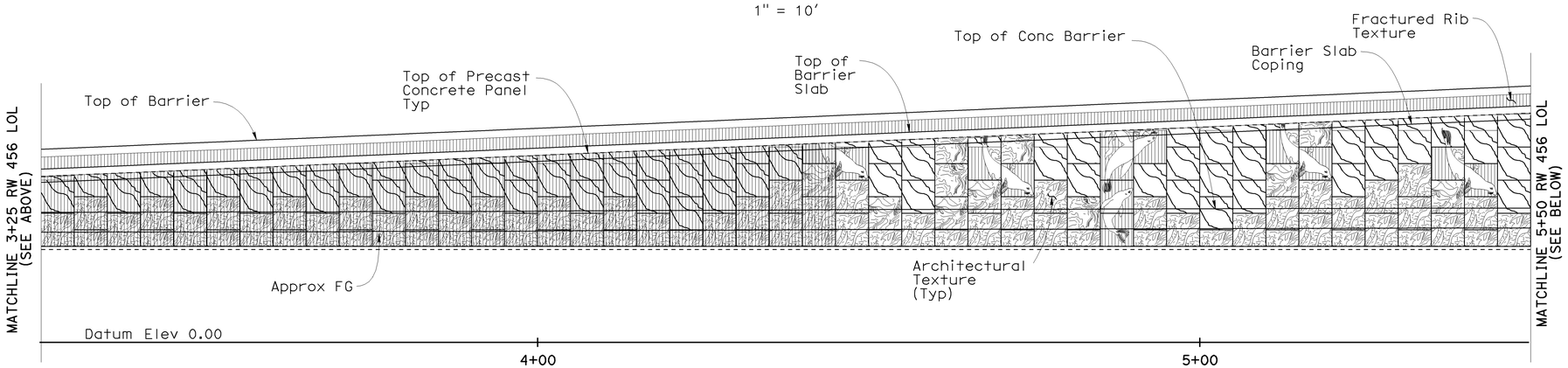

RW NO. 456 DEVELOPED ELEVATION (SEGMENT 2)

1" = 10'

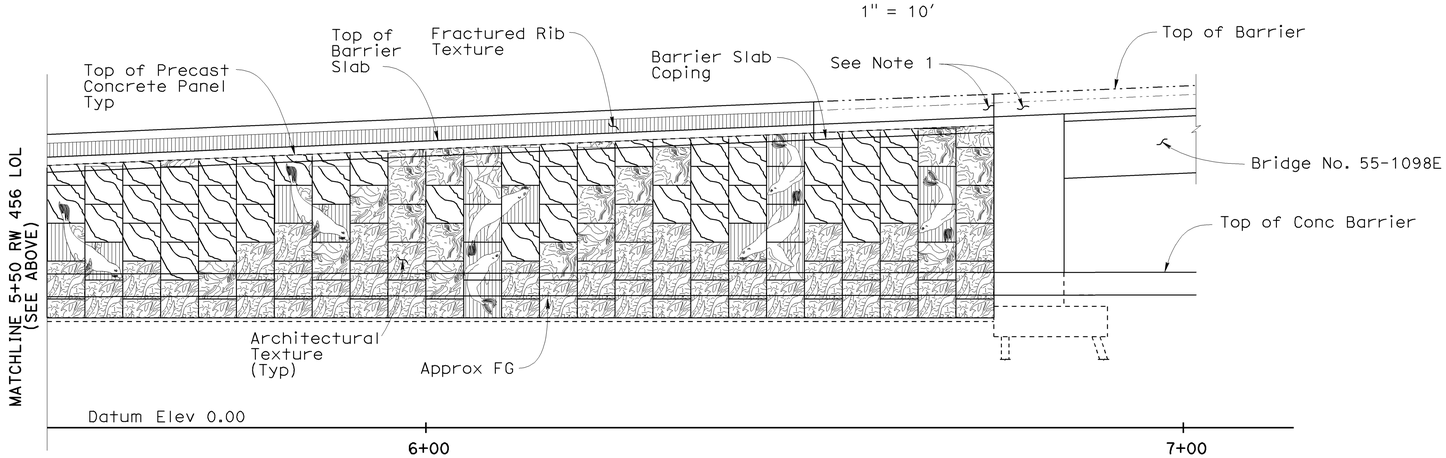

RW NO. 456 DEVELOPED ELEVATION (SEGMENT 3)

1" = 10'

NOTES

1. For Barrier Architectural Texture Not Shown, See "Structure Plans"

Sudhakar Vatti
DESIGN OVERSIGHT Sudhakar Vatti
8-10-09
SIGN OFF DATE

	BY	CHECKED
DESIGN	C. JOHNSON	A. SU
DETAILS	R. KELCHER	A. SU
QUANTITIES	A. PRILEY	J. WONG

PREPARED FOR THE STATE OF CALIFORNIA DEPARTMENT OF TRANSPORTATION

A. PRILEY
PROJECT ENGINEER

BRIDGE NO. 55E0105
POST MILE 23.45

PRECAST WALLS NO. 456 & 457 WITH LIGHTWEIGHT FILL (CELLULAR CONCRETE)

ARCHITECTURAL PANEL LAYOUT NO. 1

DESIGN DETAIL SHEET (ENGLISH) (REV. 2/25/05)

ORIGINAL SCALE IN INCHES FOR REDUCED PLANS 0 1 2 3

CU 12235
EA 071631

DISREGARD PRINTS BEARING EARLIER REVISION DATES
REVISION DATES (PRELIMINARY STAGE ONLY) 10/15/08 04/06/09 07/21/09

SHEET 19 OF 28

FILE => 55-e0105-s-arch01.dgn

USERNAME => trmnguye DATE PLOTTED => 04-FEB-2010 TIME PLOTTED => 10:37

DIST	COUNTY	ROUTE	POST MILES TOTAL PROJECT	SHEET No	TOTAL SHEETS
12	Ora	22, 405, 605	R0.3/R0.9, 22.3/24.0,3.0/R1.6	1886	1929

LICENSED LANDSCAPE ARCHITECT

2-1-10
PLANS APPROVAL DATE

LICENSED LANDSCAPE ARCHITECT CATHY L. JOHNSON NO. 4545 01-31-10 Renewal Date 07-27-09 Date STATE OF CALIFORNIA

The State of California or its officers or agents shall not be responsible for the accuracy or completeness of electronic copies of this plan sheet.

OCTA
550 SOUTH MAIN STREET
ORANGE, CA 92863

RBF CONSULTING
14725 ALTON PARKWAY
IRVINE, CA 92618

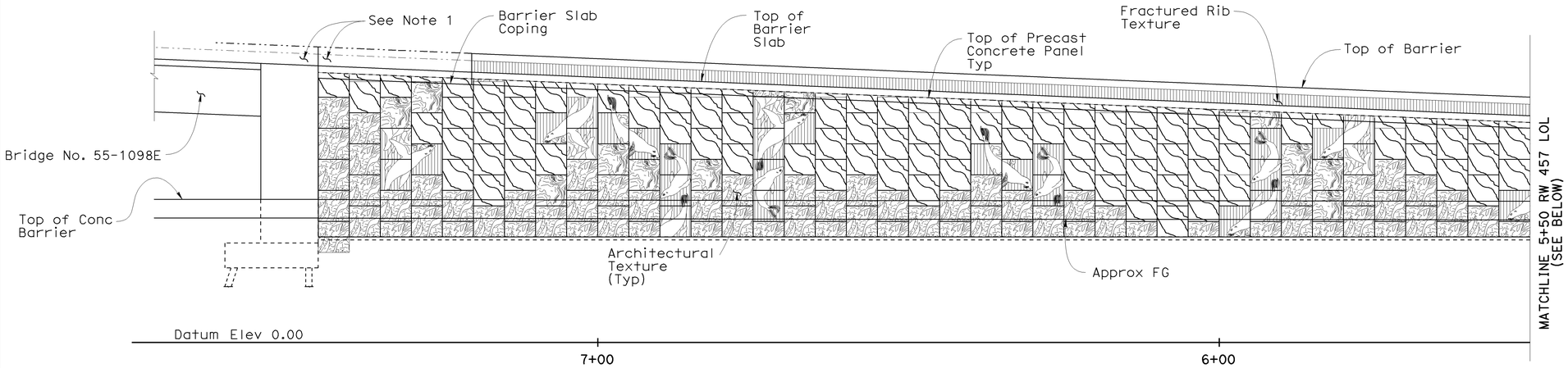

RW NO. 457 DEVELOPED ELEVATION (SEGMENT 1)

1" = 10'

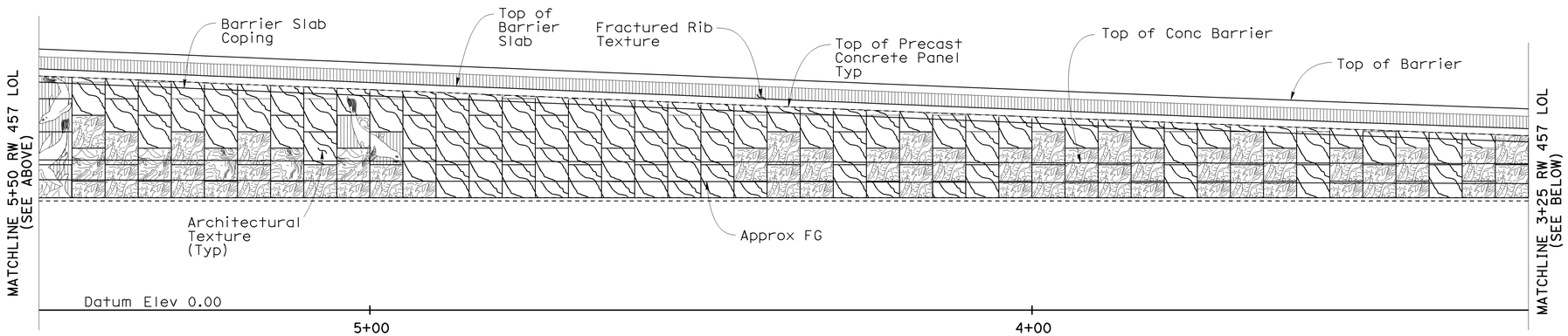

RW NO. 457 DEVELOPED ELEVATION (SEGMENT 2)

1" = 10'

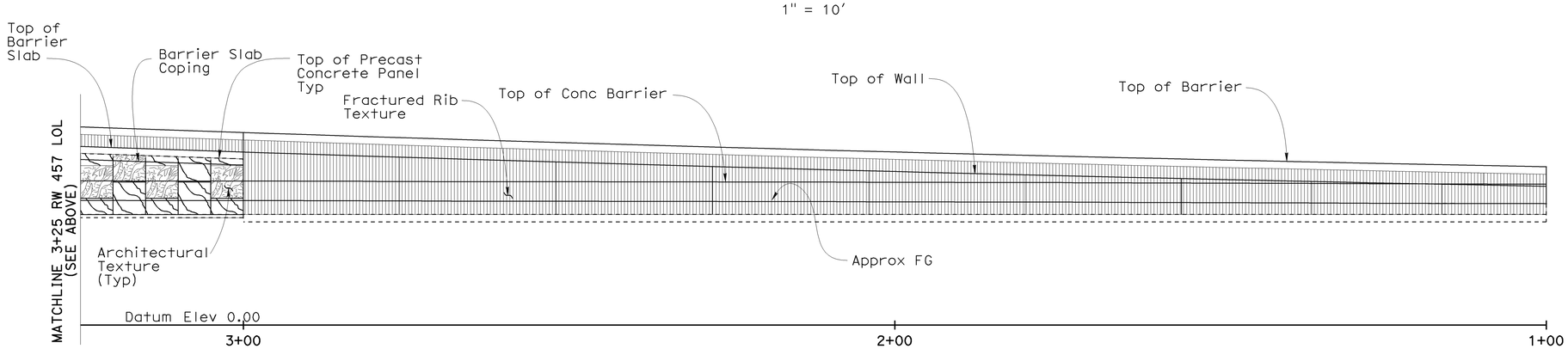

RW NO. 457 DEVELOPED ELEVATION (SEGMENT 3)

1" = 10'

NOTES

1. For Barrier Architectural Texture Not Shown, See "Structure Plans"

Sudhakar Vatti
DESIGN OVERSIGHT Sudhakar Vatti
8-10-09
SIGN OFF DATE

	BY	CHECKED
DESIGN	C. JOHNSON	A. SU
DETAILS	R. KELCHER	A. SU
QUANTITIES	A. PRILEY	J. WONG

PREPARED FOR THE STATE OF CALIFORNIA DEPARTMENT OF TRANSPORTATION

A. PRILEY
PROJECT ENGINEER

BRIDGE NO. 55E0105
POST MILE 23.45

PRECAST WALLS NO. 456 & 457 WITH LIGHTWEIGHT FILL (CELLULAR CONCRETE)

ARCHITECTURAL PANEL LAYOUT NO. 2

DESIGN DETAIL SHEET (ENGLISH) (REV. 2/25/05)

ORIGINAL SCALE IN INCHES FOR REDUCED PLANS 0 1 2 3

CU 12235
EA 071631

DISREGARD PRINTS BEARING EARLIER REVISION DATES → 10/25/08 04/06/09 07/27/09

REVISION DATES (PRELIMINARY STAGE ONLY)

SHEET 20 OF 28

FILE => 55-e0105-s-arch02.dgn

USERNAME => trmnguye DATE PLOTTED => 04-FEB-2010 TIME PLOTTED => 10:37

DIST	COUNTY	ROUTE	POST MILES TOTAL PROJECT	SHEET No	TOTAL SHEETS
12	Ora	22, 405, 605	R0.3/R0.9, 22.3/24.0,3.0/R1.6	1887	1929

LICENSED LANDSCAPE ARCHITECT

2-1-10
PLANS APPROVAL DATE

LICENSED LANDSCAPE ARCHITECT
CATHY L. JOHNSON
NO. 4545
01-31-10
Renewal Date
07-27-09
Date
STATE OF CALIFORNIA

The State of California or its officers or agents shall not be responsible for the accuracy or completeness of electronic copies of this plan sheet.

OCTA
550 SOUTH MAIN STREET
ORANGE, CA 92863

RBF CONSULTING
14725 ALTON PARKWAY
IRVINE, CA 92618

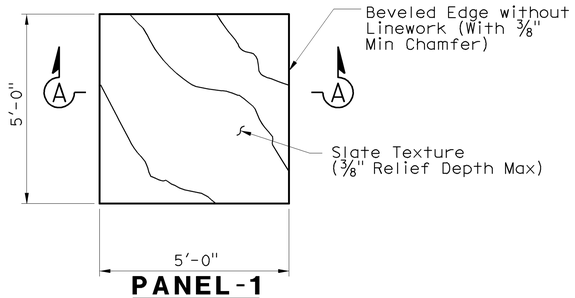

PANEL-1
1/2" = 1'-0"

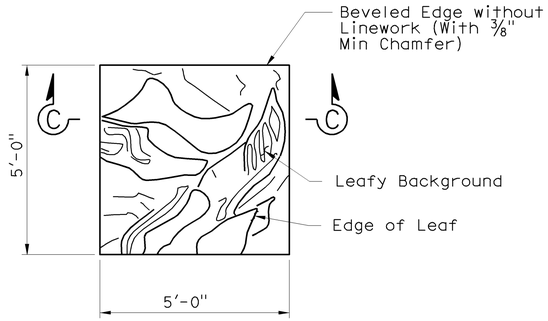

PANEL-3
1/2" = 1'-0"

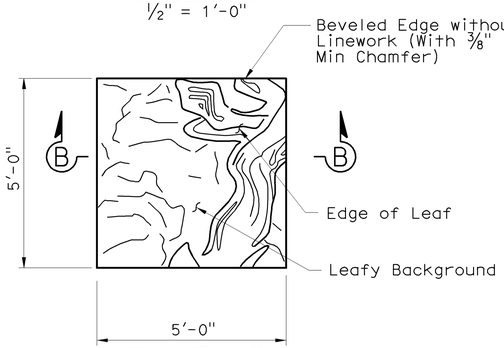

PANEL-2
1/2" = 1'-0"

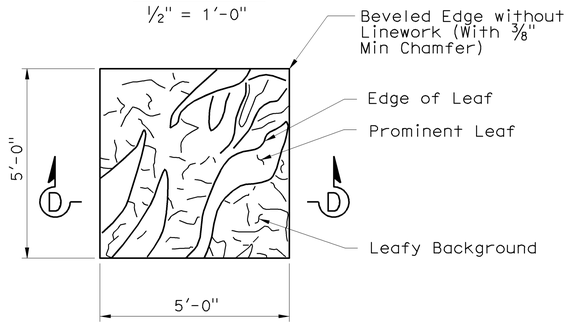

PANEL-4
1/2" = 1'-0"

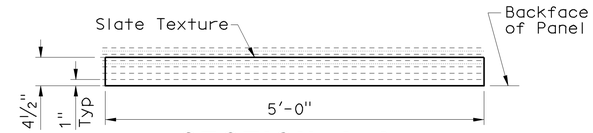

SECTION A-A
1" = 1'-0"

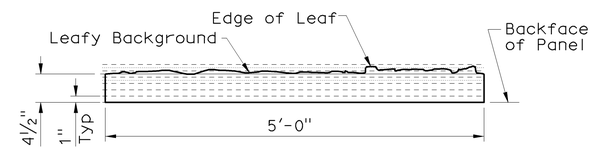

SECTION B-B
1" = 1'-0"

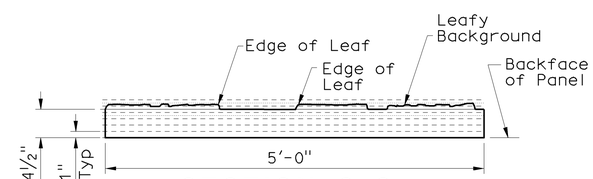

SECTION C-C
1" = 1'-0"

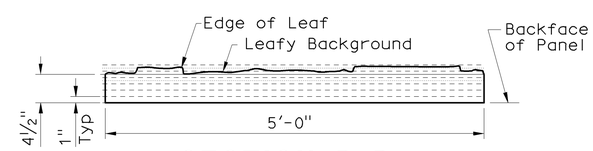

SECTION D-D
1" = 1'-0"

Sudhakar Vatti
DESIGN OVERSIGHT Sudhakar Vatti
8-10-09
SIGN OFF DATE

	BY	CHECKED
DESIGN	C. JOHNSON	A. SU
DETAILS	R. KELCHER	A. SU
QUANTITIES	A. PRILEY	J. WONG

PREPARED FOR THE
STATE OF CALIFORNIA
DEPARTMENT OF TRANSPORTATION

A. PRILEY
PROJECT ENGINEER

BRIDGE NO. 55E0105
POST MILE 23.45

PRECAST WALLS NO. 456 & 457 WITH LIGHTWEIGHT FILL (CELLULAR CONCRETE)

ARCHITECTURAL DETAILS NO. 1

DESIGN DETAIL SHEET (ENGLISH) (REV. 2/25/05)

ORIGINAL SCALE IN INCHES FOR REDUCED PLANS 0 1 2 3

CU 12235
EA 071631

DISREGARD PRINTS BEARING EARLIER REVISION DATES

REVISION DATES (PRELIMINARY STAGE ONLY) 04/06/09 07/27/09

SHEET 21 OF 28

FILE => 55-e0105-s-arch03.dgn

USERNAME => trmnguye DATE PLOTTED => 04-FEB-2010 TIME PLOTTED => 10:37

DIST	COUNTY	ROUTE	POST MILES TOTAL PROJECT	SHEET No	TOTAL SHEETS
12	Ora	22, 405, 605	R0.3/R0.9, 22.3/24.0,3.0/R1.6	1888	1929

LICENSED LANDSCAPE ARCHITECT

2-1-10
PLANS APPROVAL DATE

LICENSED LANDSCAPE ARCHITECT CATHY L. JOHNSON NO. 4545 01-31-10 Renewal Date 07-27-09 Date STATE OF CALIFORNIA

The State of California or its officers or agents shall not be responsible for the accuracy or completeness of electronic copies of this plan sheet.

OCTA
550 SOUTH MAIN STREET
ORANGE, CA 92863

RBF CONSULTING
14725 ALTON PARKWAY
IRVINE, CA 92618

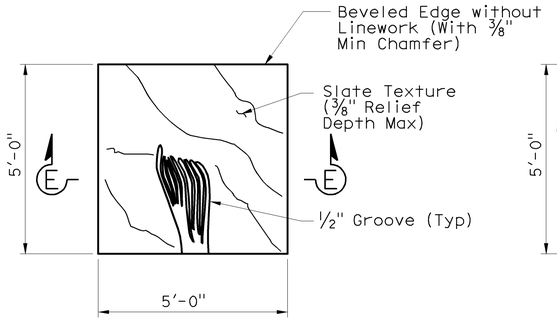

PANEL-5
1/2" = 1'-0"

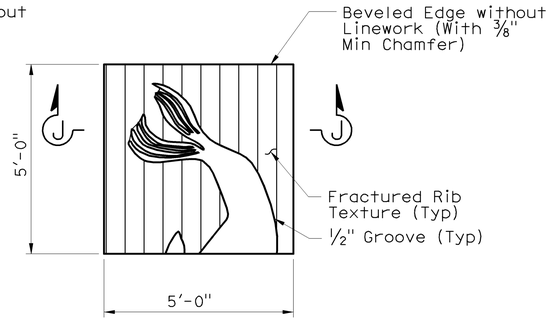

PANEL-9
1/2" = 1'-0"

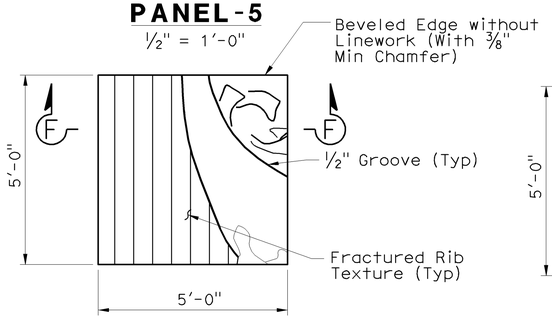

PANEL-6
1/2" = 1'-0"

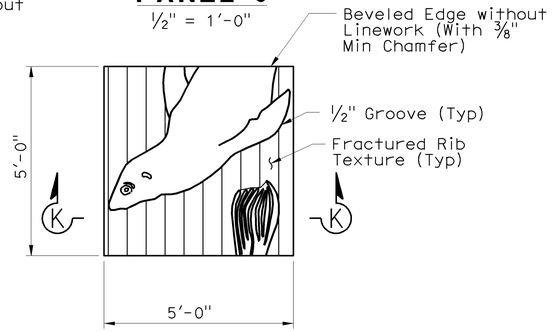

PANEL-10
1/2" = 1'-0"

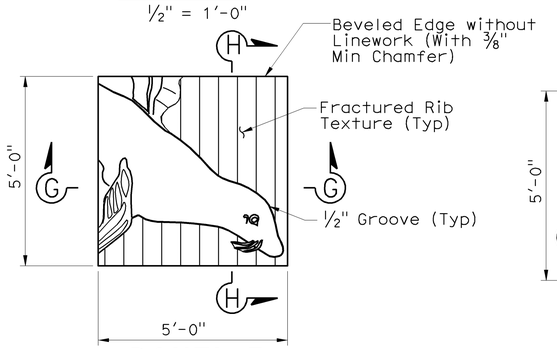

PANEL-7
1/2" = 1'-0"

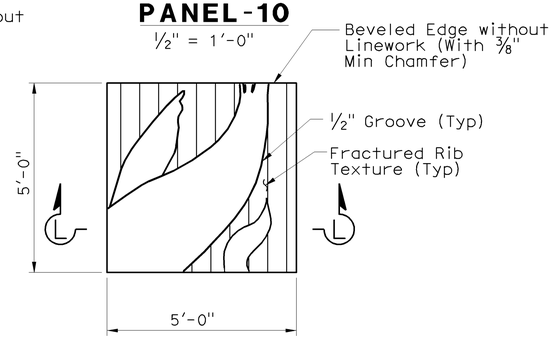

PANEL-11
1/2" = 1'-0"

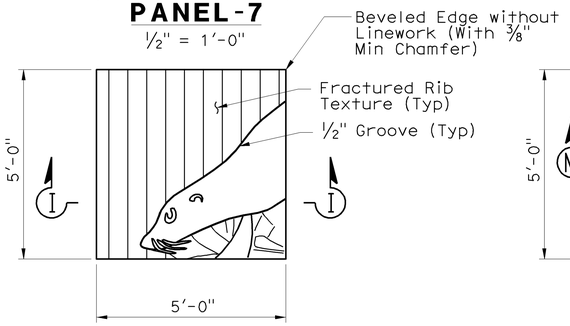

PANEL-8
1/2" = 1'-0"

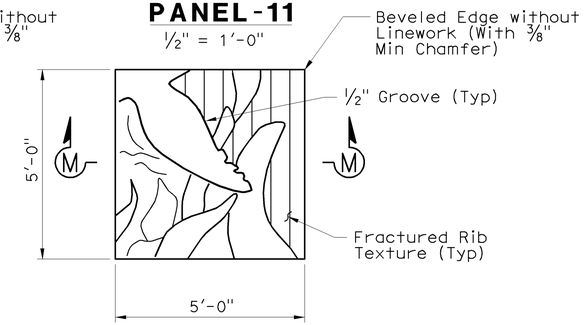

PANEL-12
1/2" = 1'-0"

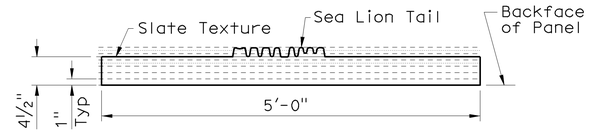

SECTION E-E
1" = 1'-0"

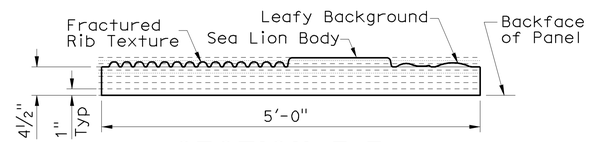

SECTION F-F
1" = 1'-0"

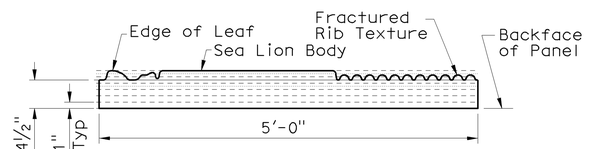

SECTION G-G
1" = 1'-0"

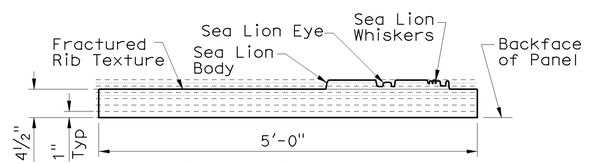

SECTION H-H
1" = 1'-0"

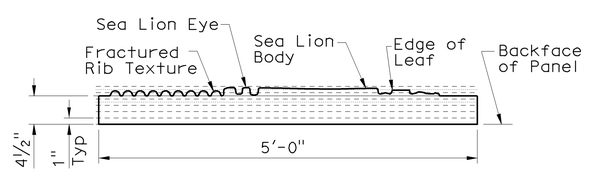

SECTION I-I
1" = 1'-0"

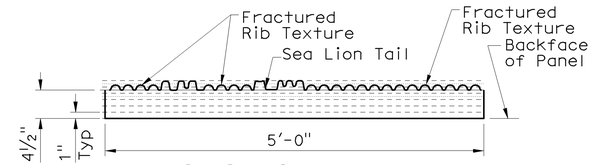

SECTION J-J
1" = 1'-0"

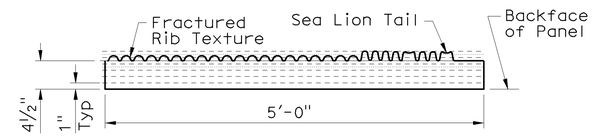

SECTION K-K
1" = 1'-0"

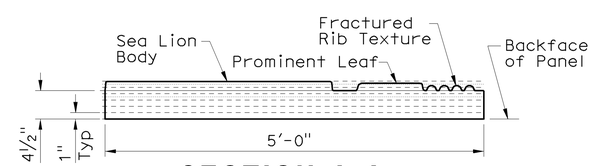

SECTION L-L
1" = 1'-0"

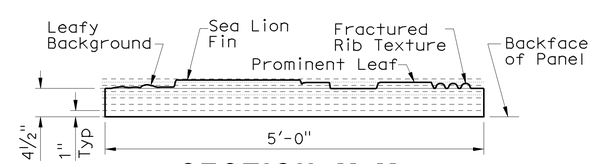

SECTION M-M
1" = 1'-0"

Sudhakar Vatti
DESIGN OVERSIGHT Sudhakar Vatti

8-10-09
SIGN OFF DATE

	BY	CHECKED
DESIGN	C. JOHNSON	A. SU
DETAILS	R. KELCHER	A. SU
QUANTITIES	A. PRILEY	J. WONG

PREPARED FOR THE
STATE OF CALIFORNIA
DEPARTMENT OF TRANSPORTATION

A. PRILEY
PROJECT ENGINEER

BRIDGE NO. 55E0105
POST MILE 23.45

PRECAST WALLS NO. 456 & 457 WITH LIGHTWEIGHT FILL (CELLULAR CONCRETE)
ARCHITECTURAL DETAILS NO. 2

DESIGN DETAIL SHEET (ENGLISH) (REV. 2/25/05)

ORIGINAL SCALE IN INCHES FOR REDUCED PLANS 0 1 2 3

CU 12235
EA 071631

DISREGARD PRINTS BEARING EARLIER REVISION DATES

REVISION DATES (PRELIMINARY STAGE ONLY) 04/06/09 07/21/09

SHEET 22 OF 28

FILE => 55-e0105-s-arch04.dgn

USERNAME => trmnguye DATE PLOTTED => 04-FEB-2010 TIME PLOTTED => 10:37

DIST	COUNTY	ROUTE	POST MILES TOTAL PROJECT	SHEET No	TOTAL SHEETS
12	Ora	22, 405, 605	R0.3/R0.9, 22.3/24.0,3.0/R1.6	1889	1929

LICENSED LANDSCAPE ARCHITECT

2-1-10
PLANS APPROVAL DATE

LICENSED LANDSCAPE ARCHITECT
CATHY L. JOHNSON
NO. 4545
01-31-10
Renewal Date
07-27-09
Date
STATE OF CALIFORNIA

The State of California or its officers or agents shall not be responsible for the accuracy or completeness of electronic copies of this plan sheet.

OCTA
550 SOUTH MAIN STREET
ORANGE, CA 92863

RBF CONSULTING
14725 ALTON PARKWAY
IRVINE, CA 92618

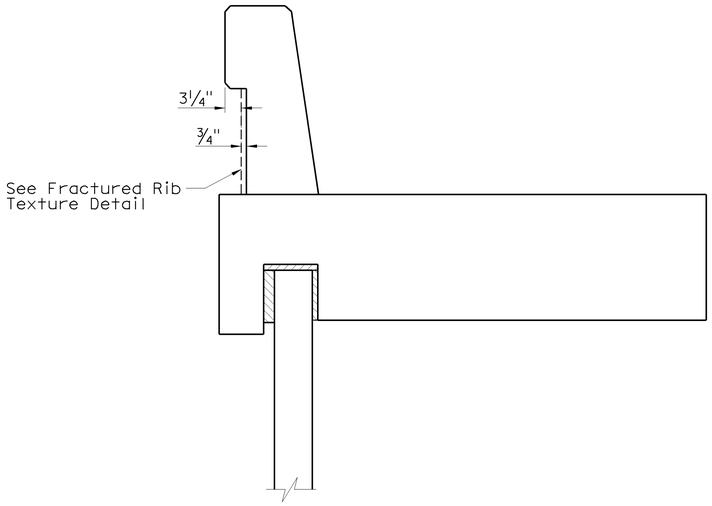

CONCRETE BARRIER (TYPE 736 MOD)

No Scale

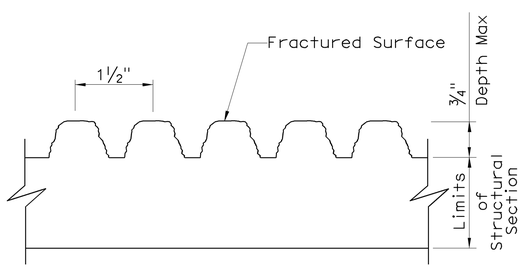

FRACTURED RIB TEXTURE

No Scale

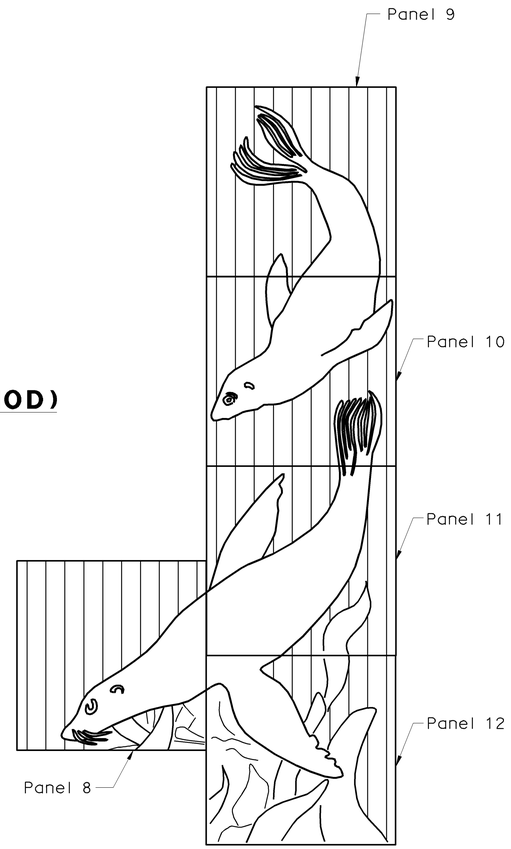

ELEVATION A

No Scale

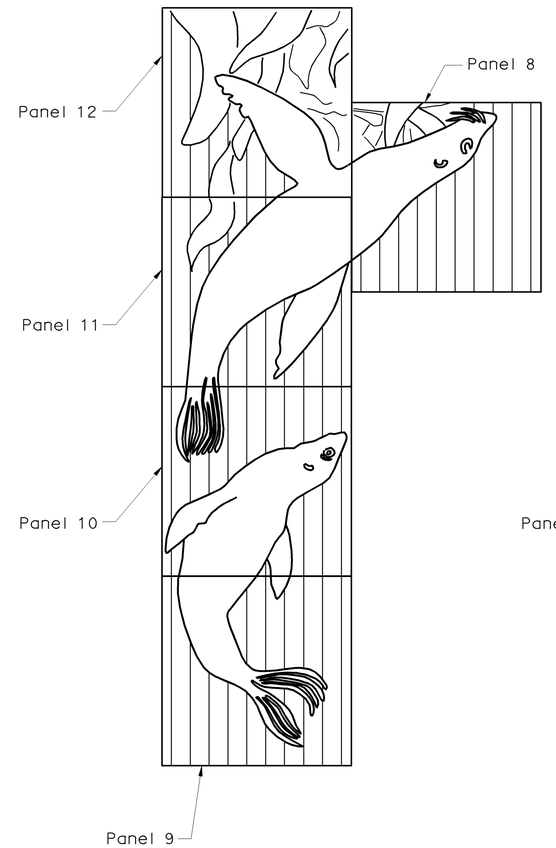

ELEVATION B

No Scale

Note: Rotate "Elevation A" 180°

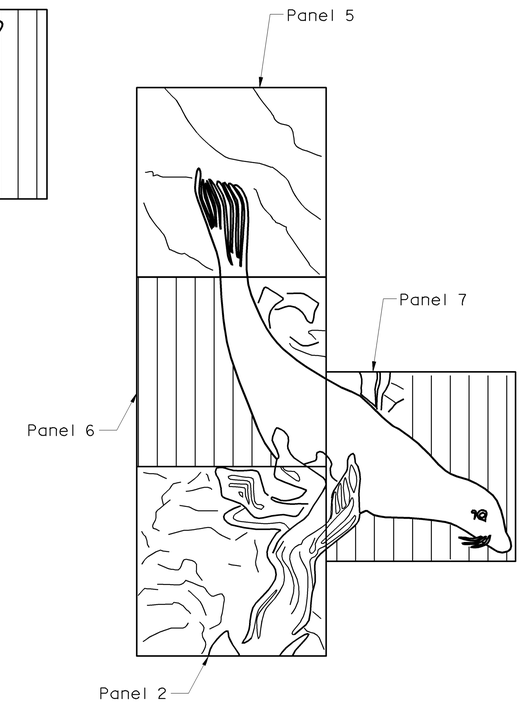

ELEVATION C

No Scale

Sudhakar Vatti
DESIGN OVERSIGHT Sudhakar Vatti

8-10-09
SIGN OFF DATE

	BY	CHECKED
DESIGN	C. JOHNSON	A. SU
DETAILS	R. KELCHER	A. SU
QUANTITIES	A. PRILEY	J. WONG

PREPARED FOR THE
STATE OF CALIFORNIA
DEPARTMENT OF TRANSPORTATION

A. PRILEY
PROJECT ENGINEER

BRIDGE NO. 55E0105
POST MILE 23.45

PRECAST WALLS NO. 456 & 457 WITH LIGHTWEIGHT FILL (CELLULAR CONCRETE)

ARCHITECTURAL DETAILS NO. 3

DESIGN DETAIL SHEET (ENGLISH) (REV. 2/25/05)

ORIGINAL SCALE IN INCHES FOR REDUCED PLANS 0 1 2 3

CU 12235
EA 071631

DISREGARD PRINTS BEARING EARLIER REVISION DATES

REVISION DATES (PRELIMINARY STAGE ONLY) 04/06/09 07/27/09

SHEET 23 OF 28

FILE => 55-e0105-s-arch05.dgn

USERNAME => trmmguye DATE PLOTTED => 04-FEB-2010 TIME PLOTTED => 10:37

REFERENCE: CALTRANS SOIL & ROCK LOGGING, CLASSIFICATION, AND PRESENTATION MANUAL (JUNE 2007)

DIST	COUNTY	ROUTE	POST MILES TOTAL PROJECT	SHEET No	TOTAL SHEETS
12	Ora	22,405, 605	R0.3/R0.9, 22.3/24.0,3.0/R1.6	1890	1929

REGISTERED CIVIL ENGINEER 07/27/09 DATE

2-1-10
PLANS APPROVAL DATE

REGISTERED PROFESSIONAL ENGINEER K.Arulmoli No. GE 2090 Exp.12-31-09 GEOTECHNICAL STATE OF CALIFORNIA

The State of California or its officers or agents shall not be responsible for the accuracy or completeness of electronic copies of this plan sheet.

OCTA
550 SOUTH MAIN STREET
ORANGE, CA 92863

EARTH MECHANICS, INC.
17660, NEWHOPE STREET, SUITE E
FOUNTAIN VALLEY, CA 92708

CEMENTATION

Description	Criteria
Weak	Crumbles or breaks with handling or little finger pressure.
Moderate	Crumbles or breaks with considerable finger pressure.
Strong	Will not crumble or break with finger pressure.

CONSISTENCY OF COHESIVE SOILS

Description	Unconfined Compressive Strength (tsf)	Pocket Penetrometer Measurement (tsf)	Torvane Measurement (tsf)	Field Approximation
Very Soft	< 0.25	< 0.25	< 0.12	Easily penetrated several inches by fist
Soft	0.25 to 0.50	0.25 to 0.50	0.12 to 0.25	Easily penetrated several inches by thumb
Medium Stiff	0.50 to 1.0	0.50 to 1.0	0.25 to 0.50	Penetrated several inches by thumb with moderate effort
Stiff	1 to 2	1 to 2	0.50 to 1.0	Readily indented by thumb but penetrated only with great effort
Very Stiff	2 to 4	2 to 4	1.0 to 2.0	Readily indented by thumbnail
Hard	> 4.0	> 4.0	> 2.0	Indented by thumbnail with difficulty

BOREHOLE IDENTIFICATION

Symbol	Hole Type	Description
Size	A	Auger Boring
Size	R P	Rotary drilled boring Rotary percussion boring (air)
Size	R	Rotary drilled diamond core
Size	HD HA	Hand driven (1-inch soil tube) Hand Auger
●	D	Dynamic Cone Penetration Boring
▲	CPT	Cone Penetration Test (ASTM D 5778-95)
□	O	Other

Note: Size in inches.

PLASTICITY OF FINE-GRAINED SOILS

Description	Criteria
Nonplastic	A 1/8-inch thread cannot be rolled at any water content.
Low	The thread can barely be rolled and the lump cannot be formed when drier than the plastic limit.
Medium	The thread is easy to roll and not much time is required to reach the plastic limit. The thread cannot be rerolled after reaching the plastic limit. The lump crumbles when drier than the plastic limit.
High	It takes considerable time rolling and kneading to reach the plastic limit. The thread can be rerolled several times after reaching the plastic limit. The lump can be formed without crumbling when drier than the plastic limit.

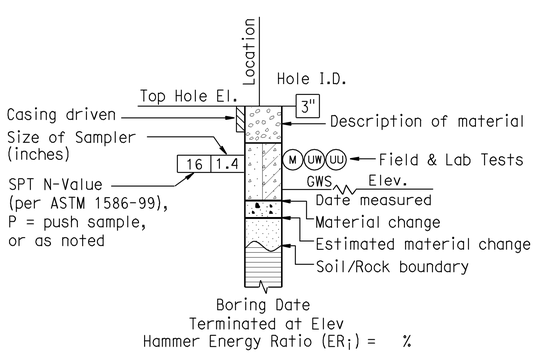

ROTARY BORING

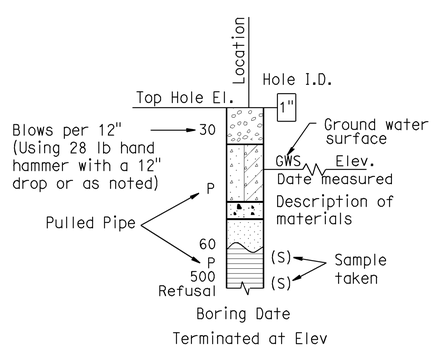

HAND BORING

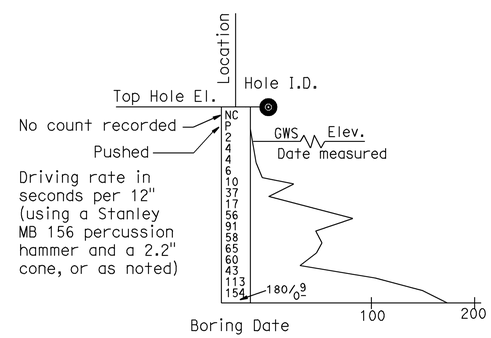

DYNAMIC CONE PENETRATION BORING

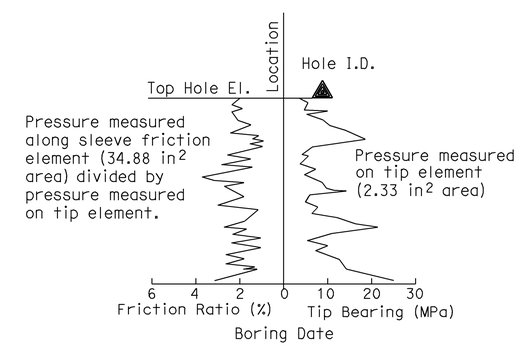

CONE PENETRATION TEST (CPT) SOUNDING

Sudhakar Vatti
DESIGN OVERSIGHT Sudhakar Vatti
8-10-09
SIGN OFF DATE

DRAWN BY: J.Fang
CHECKED BY: G.J.Gunaranjan

FIELD INVESTIGATION BY:
R.Jie

PREPARED FOR THE
STATE OF CALIFORNIA
DEPARTMENT OF TRANSPORTATION

K.Arulmoli
PROJECT ENGINEER

BRIDGE NO. 55E0105
POST MILE 23.45

PRECAST WALLS NO. 456 & 457 WITH LIGHTWEIGHT FILL (CELLULAR CONCRETE)

LOG OF TEST BORINGS NO. 1

OSF CIVIL LOG OF TEST BORINGS SHEET (ENGLISH) (REV. 2-25-05)

ORIGINAL SCALE IN INCHES FOR REDUCED PLANS 0 1 2 3

CU 12235
EA 071631

DISREGARD PRINTS BEARING EARLIER REVISION DATES
REVISION DATES (PRELIMINARY STAGE ONLY) 10/15/08 03/25/09 04/06/09 07/27/09

SHEET 24 OF 28

FILE => 55-e0105-z-ltb01.dgn

USERNAME => trmnguye DATE PLOTTED => 04-FEB-2010 TIME PLOTTED => 10:37

REFERENCE: CALTRANS SOIL & ROCK LOGGING, CLASSIFICATION, AND PRESENTATION MANUAL (JUNE 2007)

GROUP SYMBOLS AND NAMES

Graphic/Symbol	Group Names
GW	Well-graded GRAVEL Well-graded GRAVEL with SAND
GP	Poorly graded GRAVEL Poorly graded GRAVEL with SAND
GW-GM	Well-graded GRAVEL with SILT Well-graded GRAVEL with SILT and SAND
GW-GC	Well-graded GRAVEL with CLAY (or SILTY CLAY) Well-graded GRAVEL with CLAY and SAND (or SILTY CLAY and SAND)
GP-GM	Poorly graded GRAVEL with SILT Poorly graded GRAVEL with SILT and SAND
GP-GC	Poorly graded GRAVEL with CLAY (or SILTY CLAY) Poorly graded GRAVEL with CLAY and SAND (or SILTY CLAY and SAND)
GM	SILTY GRAVEL SILTY GRAVEL with SAND
GC	CLAYEY GRAVEL CLAYEY GRAVEL with SAND
GC-GM	SILTY, CLAYEY GRAVEL SILTY, CLAYEY GRAVEL with SAND
SW	Well-graded SAND Well-graded SAND with GRAVEL
SP	Poorly graded SAND Poorly graded SAND with GRAVEL
SW-SM	Well-graded SAND with SILT Well-graded SAND with SILT and GRAVEL
SW-SC	Well-graded SAND with CLAY (or SILTY CLAY) Well-graded SAND with CLAY and GRAVEL (or SILTY CLAY and GRAVEL)
SP-SM	Poorly graded SAND with SILT Poorly graded SAND with SILT and GRAVEL
SP-SC	Poorly graded SAND with CLAY (or SILTY CLAY) Poorly graded SAND with CLAY and GRAVEL (or SILTY CLAY and GRAVEL)
SM	SILTY SAND SILTY SAND with GRAVEL
SC	CLAYEY SAND CLAYEY SAND with GRAVEL
SC-SM	SILTY, CLAYEY SAND SILTY, CLAYEY SAND with GRAVEL
PT	PEAT
	COBBLES COBBLES and BOULDERS BOULDERS

Graphic/Symbol	Group Names
CL	Lean CLAY Lean CLAY with SAND Lean CLAY with GRAVEL SANDY lean CLAY SANDY lean CLAY with GRAVEL GRAVELLY lean CLAY GRAVELLY lean CLAY with SAND
CL-ML	SILTY CLAY SILTY CLAY with SAND SILTY CLAY with GRAVEL SANDY SILTY CLAY SANDY SILTY CLAY with GRAVEL GRAVELLY SILTY CLAY GRAVELLY SILTY CLAY with SAND
ML	SILT SILT with SAND SILT with GRAVEL SANDY SILT SANDY SILT with GRAVEL GRAVELLY SILT GRAVELLY SILT with SAND
OL	ORGANIC lean CLAY ORGANIC lean CLAY with SAND ORGANIC lean CLAY with GRAVEL SANDY ORGANIC lean CLAY SANDY ORGANIC lean CLAY with GRAVEL GRAVELLY ORGANIC lean CLAY GRAVELLY ORGANIC lean CLAY with SAND
OL	ORGANIC SILT ORGANIC SILT with SAND ORGANIC SILT with GRAVEL SANDY ORGANIC SILT SANDY ORGANIC SILT with GRAVEL GRAVELLY ORGANIC SILT GRAVELLY ORGANIC SILT with SAND
CH	Fat CLAY Fat CLAY with SAND Fat CLAY with GRAVEL SANDY fat CLAY SANDY fat CLAY with GRAVEL GRAVELLY fat CLAY GRAVELLY fat CLAY with SAND
MH	Elastic SILT Elastic SILT with SAND Elastic SILT with GRAVEL SANDY elastic SILT SANDY elastic SILT with GRAVEL GRAVELLY elastic SILT GRAVELLY elastic SILT with SAND
OH	ORGANIC fat CLAY ORGANIC fat CLAY with SAND ORGANIC fat CLAY with GRAVEL SANDY ORGANIC fat CLAY SANDY ORGANIC fat CLAY with GRAVEL GRAVELLY ORGANIC fat CLAY GRAVELLY ORGANIC fat CLAY with SAND
OH	ORGANIC elastic SILT ORGANIC elastic SILT with SAND ORGANIC elastic SILT with GRAVEL SANDY ORGANIC elastic SILT SANDY ORGANIC elastic SILT with GRAVEL GRAVELLY ORGANIC elastic SILT GRAVELLY ORGANIC elastic SILT with SAND
OL/OH	ORGANIC SOIL ORGANIC SOIL with SAND ORGANIC SOIL with GRAVEL SANDY ORGANIC SOIL SANDY ORGANIC SOIL with GRAVEL GRAVELLY ORGANIC SOIL GRAVELLY ORGANIC SOIL with SAND

FIELD AND LABORATORY TESTING

- (C) Consolidation (ASTM D 2435)
- (CL) Collapse Potential (ASTM D 5333)
- (CP) Compaction Curve (CTM 216)
- (CR) Corrosivity Testing (CTM 643, CTM 422, CTM 417)
- (CU) Consolidated Undrained Triaxial (ASTM D 4767)
- (DS) Direct Shear (ASTM D 3080)
- (EI) Expansion Index (ASTM D 4829)
- (M) Moisture Content (ASTM D 2216)
- (OC) Organic Content-% (ASTM D 2974)
- (P) Permeability (CTM 220)
- (PA) Particle Size Analysis (ASTM D 422)
- (PI) Plasticity Index (AASHTO T 90) Liquid Limit (AASHTO T 89)
- (PL) Point Load Index (ASTM D 5731)
- (PM) Pressure Meter
- (PP) Pocket Penetrometer
- (R) R-Value (CTM 301)
- (SE) Sand Equivalent (CTM 217)
- (SG) Specific Gravity (AASHTO T 100)
- (SL) Shrinkage Limit (ASTM D 427)
- (SW) Swell Potential (ASTM D 4546)
- (TV) Pocket Torvane
- (UC) Unconfined Compression-Soil (ASTM D 2166) Unconfined Compression-Rock (ASTM D 2938)
- (UU) Unconsolidated Undrained Triaxial (ASTM D 2850)
- (UW) Unit Weight (ASTM D 4767)
- (VS) Vane Shear (AASHTO T 223)

DIST	COUNTY	ROUTE	POST MILES TOTAL PROJECT	SHEET No	TOTAL SHEETS
12	Ora	22,405, 605	R0.3/R0.9, 22.3/24.0,3.0/R1.6	1891	1929

07/27/09
REGISTERED CIVIL ENGINEER DATE

2-1-10
PLANS APPROVAL DATE

REGISTERED PROFESSIONAL ENGINEER K.Arulmoli No. GE 2090 Exp.12-31-09 GEOTECHNICAL STATE OF CALIFORNIA

The State of California or its officers or agents shall not be responsible for the accuracy or completeness of electronic copies of this plan sheet.

OCTA
550 SOUTH MAIN STREET
ORANGE, CA 92863

EARTH MECHANICS, INC.
17660, NEWHOPE STREET, SUITE E
FOUNTAIN VALLEY, CA 92708

APPARENT DENSITY OF COHESIONLESS SOILS

Description	SPT N_{60} (Blows / 12 inches)
Very loose	0 - 4
Loose	5 - 10
Medium Dense	11 - 30
Dense	31 - 50
Very Dense	> 50

MOISTURE

Description	Criteria
Dry	Absence of moisture, dusty, dry to the touch
Moist	Damp but no visible water
Wet	Visible free water, usually soil is below water table

PERCENT OR PROPORTION OF SOILS

Description	Criteria
Trace	Particles are present but estimated to be less than 5%
Few	5 to 10%
Little	15 to 25%
Some	30 to 45%
Mostly	50 to 100%

PARTICLE SIZE

Description		Size
Boulder		> 12"
Cobble		3" to 12"
Gravel	Coarse	3/4" to 3"
	Fine	No. 4 to 3/4"
Sand	Coarse	No. 10 to No. 4
	Medium	No. 40 to No. 10
	Fine	No. 200 to No. 40

Sudhakar Vatti
DESIGN OVERSIGHT Sudhakar Vatti
8-10-09
SIGN OFF DATE

DRAWN BY: J.Fang
CHECKED BY: G.J.Gunaranjan

FIELD INVESTIGATION BY:
R.Jie

PREPARED FOR THE STATE OF CALIFORNIA DEPARTMENT OF TRANSPORTATION

K.Arulmoli
PROJECT ENGINEER

BRIDGE NO. 55E0105
POST MILE 23.45

PRECAST WALLS NO. 456 & 457 WITH LIGHTWEIGHT FILL (CELLULAR CONCRETE)

LOG OF TEST BORINGS NO. 2

OSF CIVIL LOG OF TEST BORINGS SHEET (ENGLISH) (REV. 2-25-05)

ORIGINAL SCALE IN INCHES FOR REDUCED PLANS 0 1 2 3

CU 12235
EA 071631

DISREGARD PRINTS BEARING EARLIER REVISION DATES

REVISION DATES (PRELIMINARY STAGE ONLY) 10/15/08 03/23/09 04/06/09 07/21/09

SHEET 25 OF 28

FILE => 55-e0105-z-ltb02.dgn

USERNAME => trstrk DATE PLOTTED => 04-FEB-2010 TIME PLOTTED => 10:49

DIST	COUNTY	ROUTE	POST MILES TOTAL PROJECT	SHEET No	TOTAL SHEETS
12	Ora	22,405, 605	R0.3/R0.9, 22.3/24.0,3.0/R1.6	1892	1929

REGISTERED CIVIL ENGINEER 07/27/09 DATE

2-1-10
PLANS APPROVAL DATE

REGISTERED PROFESSIONAL ENGINEER K.Arulmoli No. GE 2090 Exp.12-31-09 GEOTECHNICAL STATE OF CALIFORNIA

The State of California or its officers or agents shall not be responsible for the accuracy or completeness of electronic copies of this plan sheet.

OCTA
550 SOUTH MAIN STREET
ORANGE, CA 92863

EARTH MECHANICS, INC.
17660, NEWHOPE STREET, SUITE E
FOUNTAIN VALLEY, CA 92708

BENCHMARKS:

Monument: 1A-144-04

Described by OCS 2005 - Found 3.75" OCS aluminum benchmark disk stamped "1A-144-04", set in the southwesterly corner of a 4.4 ft by 4.4 ft concrete catch basin. Monument is located in the northeasterly corner of the intersection of Seal Beach Boulevard and St. Cloud Drive, 44 ft easterly of the centerline of Seal Beach Boulevard and 58 ft northerly of the centerline of St. Cloud Dr. Monument is set level with the sidewalk.

Elevation: 15.37 feet

NOTES:

(1) This LOTB sheet (Boring Record) was prepared in accordance with the Caltrans Soil and Rock Classification Logging, Classification and Presentation Manual (June 2007).

(2) 2.4" samples were taken using a California Modified Sampler.

(3) An automatic trip hammer system consisting of a hammer weight of 140 lbs falling a distance of 30" was used to advance the drive sampler.

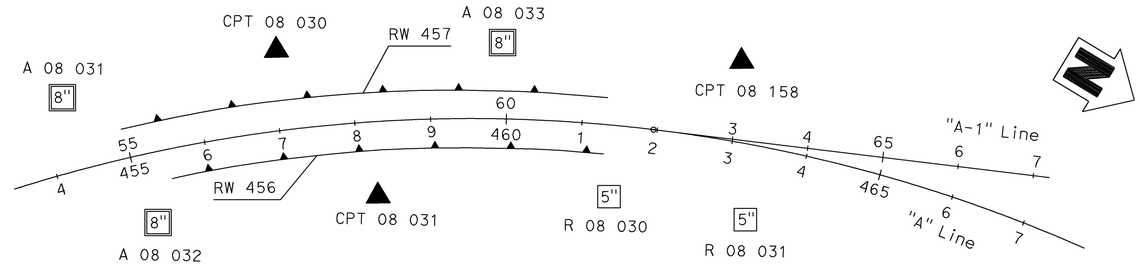

PLAN

1" = 100'

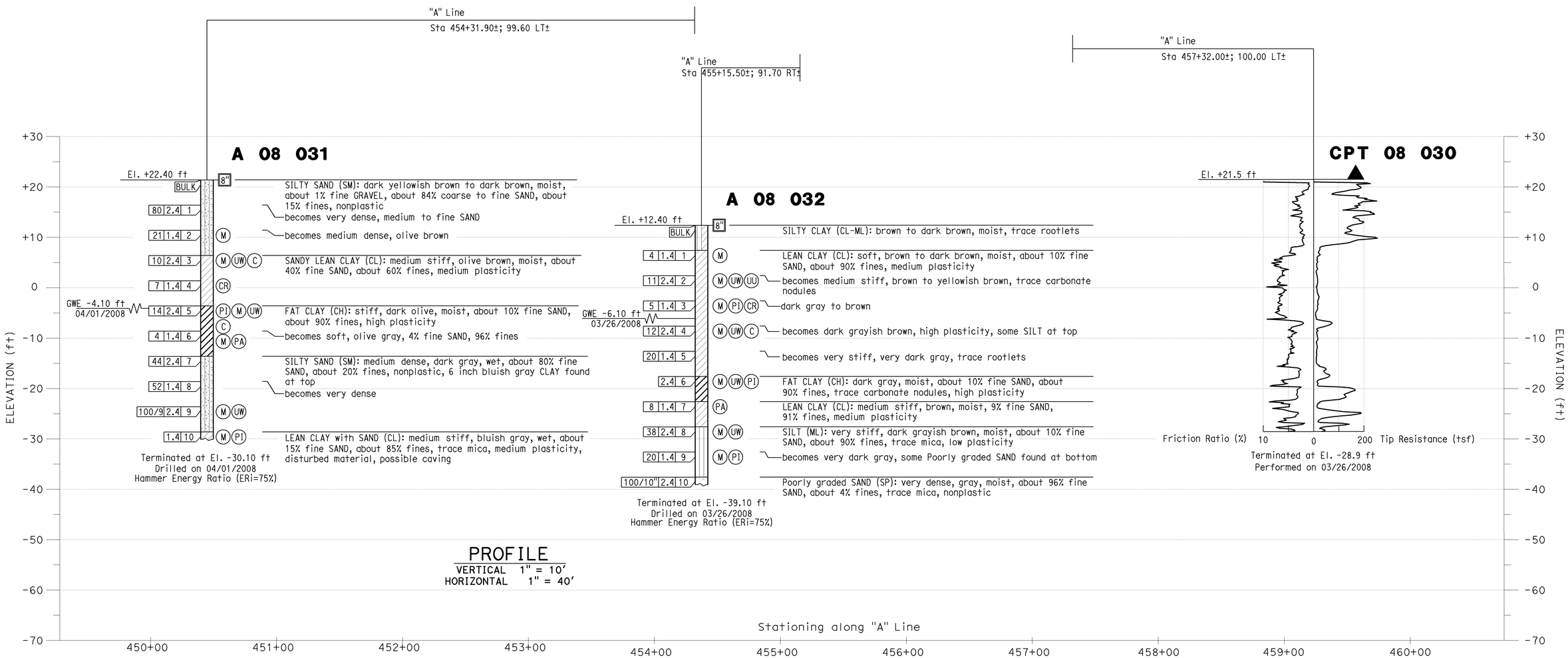

PROFILE

VERTICAL 1" = 10'
HORIZONTAL 1" = 40'

Sudhakar Vatti
DESIGN OVERSIGHT Sudhakar Vatti

8-10-09
SIGN OFF DATE

DRAWN BY: J.Fang
CHECKED BY: G.J.Gunaranjan

FIELD INVESTIGATION BY:
R.Jie

PREPARED FOR THE STATE OF CALIFORNIA DEPARTMENT OF TRANSPORTATION

K.Arulmoli
PROJECT ENGINEER

BRIDGE NO. 55E0105
POST MILE 23.45

PRECAST WALLS NO. 456 & 457 WITH LIGHTWEIGHT FILL (CELLULAR CONCRETE)

LOG OF TEST BORINGS NO. 3

OSF CIVIL LOG OF TEST BORINGS SHEET (ENGLISH) (REV. 2-25-05)

ORIGINAL SCALE IN INCHES FOR REDUCED PLANS 0 1 2 3

CU 12235
EA 071631

DISREGARD PRINTS BEARING EARLIER REVISION DATES

REVISION DATES (PRELIMINARY STAGE ONLY) 10/15/08 03/25/09 04/06/09 07/27/09

SHEET 26 OF 28

FILE => 55-e0105-z-ltb03.dgn

USERNAME => ttstrk DATE PLOTTED => 04-FEB-2010 TIME PLOTTED => 10:49

DIST	COUNTY	ROUTE	POST MILES TOTAL PROJECT	SHEET No	TOTAL SHEETS
12	Ora	22,405, 605	R0.3/R0.9, 22.3/24.0,3.0/R1.6	1893	1929

REGISTERED CIVIL ENGINEER 07/27/09 DATE

2-1-10
PLANS APPROVAL DATE

REGISTERED PROFESSIONAL ENGINEER K.Arulmoli No. GE 2090 Exp. 12-31-09 GEOTECHNICAL STATE OF CALIFORNIA

The State of California or its officers or agents shall not be responsible for the accuracy or completeness of electronic copies of this plan sheet.

OCTA
550 SOUTH MAIN STREET
ORANGE, CA 92863

EARTH MECHANICS, INC.
17660, NEWHOPE STREET, SUITE E
FOUNTAIN VALLEY, CA 92708

BENCHMARKS:

Monument: 1A-144-04

Described by OCS 2005 - Found 3.75" OCS aluminum benchmark disk stamped "1A-144-04", set in the southwesterly corner of a 4.4 ft by 4.4 ft concrete catch basin. Monument is located in the northeasterly corner of the intersection of Seal Beach Boulevard and St. Cloud Drive, 44 ft easterly of the centerline of Seal Beach Boulevard and 58 ft northerly of the centerline of St. Cloud Dr. Monument is set level with the sidewalk.

Elevation: 15.37 feet

NOTES:

(1) This LOTB sheet (Boring Record) was prepared in accordance with the Caltrans Soil and Rock Classification Logging, Classification and Presentation Manual (June 2007).

(2) 2.4" samples were taken using a California Modified Sampler.

(3) A rope and cat-head hammer system consisting of a hammer weight of 140 lbs falling a distance of 30" was used to advance the drive sampler.

(4) An automatic trip hammer system consisting of a hammer weight of 140 lbs falling a distance of 30" was used to advance the drive sampler.

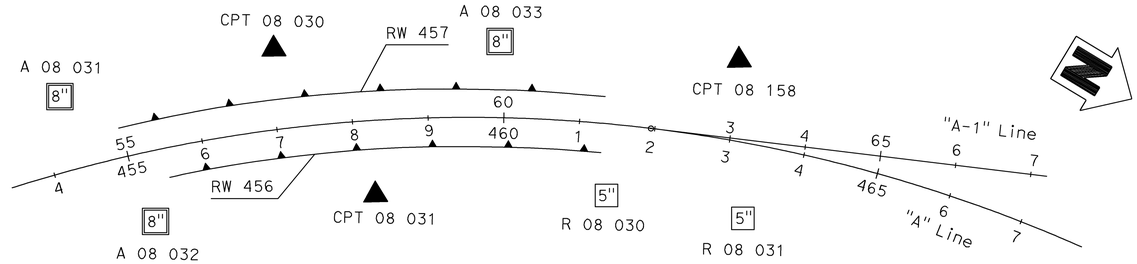

PLAN

1" = 100'

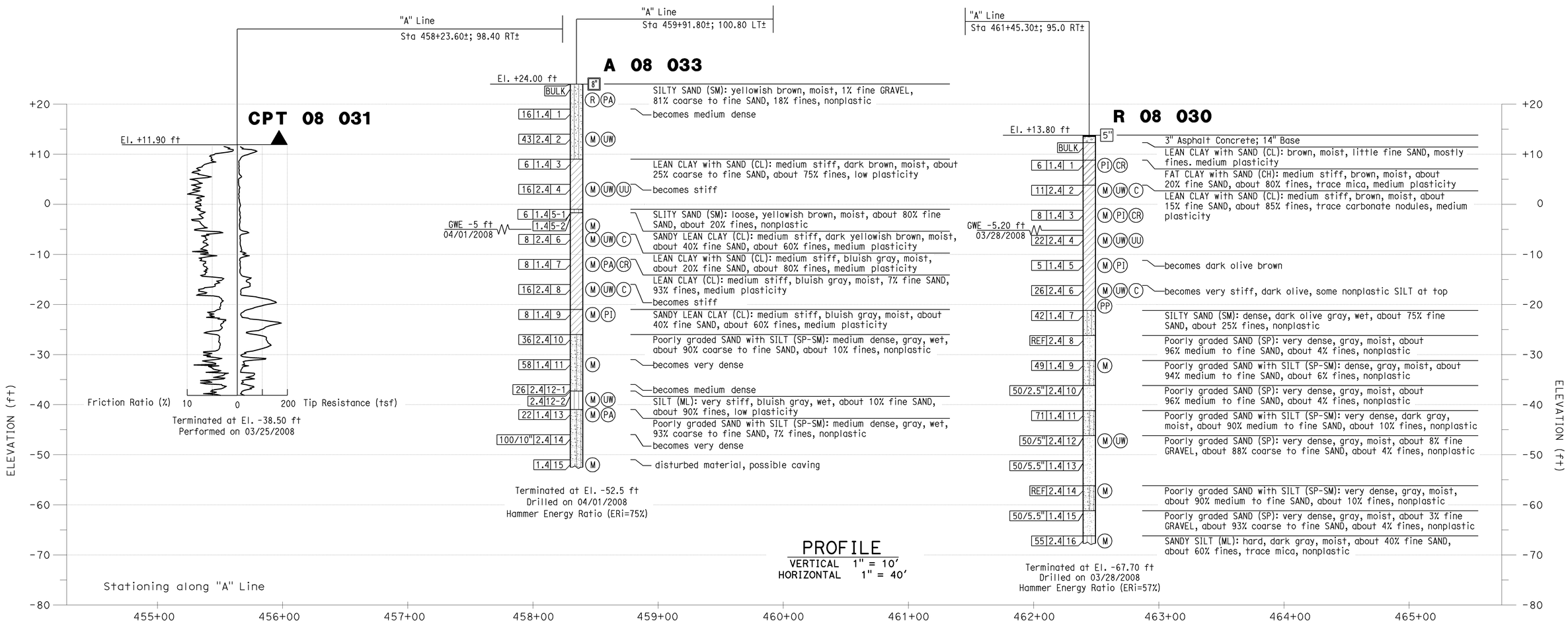

Sudhakar Vatti
DESIGN OVERSIGHT Sudhakar Vatti

8-10-09
SIGN OFF DATE

DRAWN BY: J.Fang
CHECKED BY: G.J.Gunaranjan

FIELD INVESTIGATION BY:
R.Jie

PREPARED FOR THE STATE OF CALIFORNIA DEPARTMENT OF TRANSPORTATION

K.Arulmoli
PROJECT ENGINEER

BRIDGE NO. 55E0105
POST MILE 23.45

PRECAST WALLS NO. 456 & 457 WITH LIGHTWEIGHT FILL (CELLULAR CONCRETE)

LOG OF TEST BORINGS NO. 4

OSF CIVIL LOG OF TEST BORINGS SHEET (ENGLISH) (REV. 2-25-05)

ORIGINAL SCALE IN INCHES FOR REDUCED PLANS 0 1 2 3

CU 12235
EA 071631

DISREGARD PRINTS BEARING EARLIER REVISION DATES

REVISION DATES (PRELIMINARY STAGE ONLY) 10/15/08 03/23/09 04/06/09 07/27/09

SHEET 27 OF 28

FILE => 55-e0105-z-ltb04.dgn

USERNAME => ttstrk DATE PLOTTED => 04-FEB-2010 TIME PLOTTED => 10:49

DIST	COUNTY	ROUTE	POST MILES TOTAL PROJECT	SHEET No	TOTAL SHEETS
12	Ora	22,405, 605	R0.3/R0.9, 22.3/24.0,3.0/R1.6	1894	1929

REGISTERED CIVIL ENGINEER 07/27/09 DATE

2-1-10
PLANS APPROVAL DATE

REGISTERED PROFESSIONAL ENGINEER K.Arulmoli No. GE 2090 Exp.12-31-09 GEOTECHNICAL STATE OF CALIFORNIA

The State of California or its officers or agents shall not be responsible for the accuracy or completeness of electronic copies of this plan sheet.

OCTA
550 SOUTH MAIN STREET
ORANGE, CA 92863

EARTH MECHANICS, INC.
17660, NEWHOPE STREET, SUITE E
FOUNTAIN VALLEY, CA 92708

BENCHMARKS:

Monument: 1A-144-04

Described by OCS 2005 - Found 3.75" OCS aluminum benchmark disk stamped "1A-144-04", set in the southwesterly corner of a 4.4 ft by 4.4 ft concrete catch basin. Monument is located in the northeasterly corner of the intersection of Seal Beach Boulevard and St. Cloud Drive, 44 ft easterly of the centerline of Seal Beach Boulevard and 58 ft northerly of the centerline of St. Cloud Dr. Monument is set level with the sidewalk.

Elevation: 15.37 feet

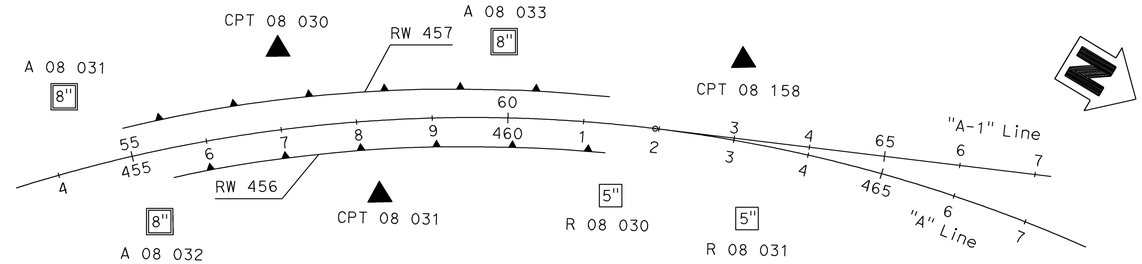

PLAN

1" = 100'

NOTES:

(1) This LOTB sheet (Boring Record) was prepared in accordance with the Caltrans Soil and Rock Classification Logging, Classification and Presentation Manual (June 2007).

(2) 2.4" samples were taken using a California Modified Sampler.

(3) A rope and cat-head hammer system consisting of a hammer weight of 140 lbs falling a distance of 30" was used to advance the drive sampler.

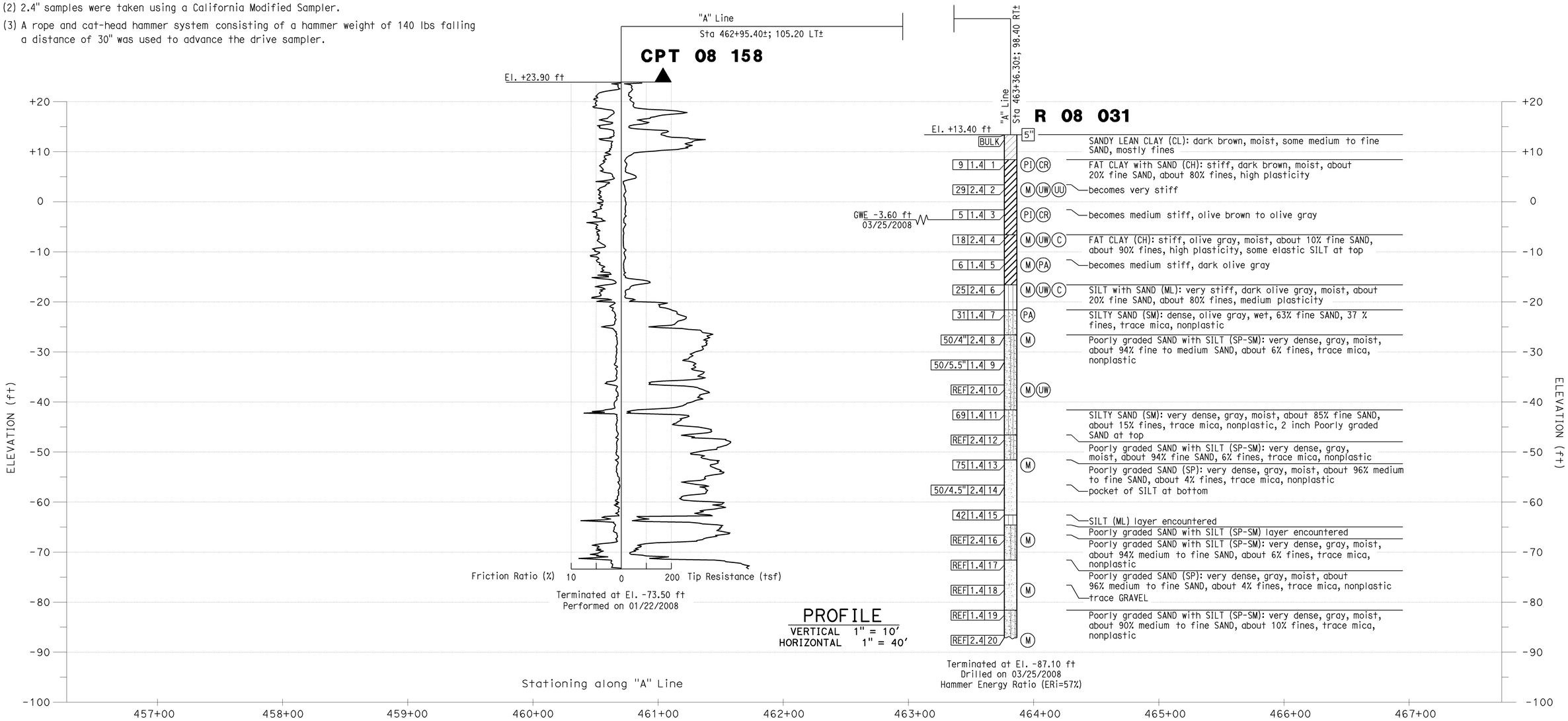

Sudhakar Vatti
DESIGN OVERSIGHT Sudhakar Vatti

8-10-09
SIGN OFF DATE

DRAWN BY: J.Fang

CHECKED BY: G.J.Gunaranjan

FIELD INVESTIGATION BY: R.Jie

PREPARED FOR THE STATE OF CALIFORNIA DEPARTMENT OF TRANSPORTATION

K.Arulmoli
PROJECT ENGINEER

BRIDGE NO. 55E0105
POST MILE 23.45

PRECAST WALLS NO. 456 & 457 WITH LIGHTWEIGHT FILL (CELLULAR CONCRETE)

LOG OF TEST BORINGS NO. 5

OSF CIVIL LOG OF TEST BORINGS SHEET (ENGLISH) (REV. 2-25-05)

ORIGINAL SCALE IN INCHES FOR REDUCED PLANS 0 1 2 3

CU 12235
EA 071631

DISREGARD PRINTS BEARING EARLIER REVISION DATES

REVISION DATES (PRELIMINARY STAGE ONLY) 10/25/08 03/25/09 04/06/09 07/27/09

SHEET 28 OF 28

FILE => 55-e0105-z-ltb05.dgn

USERNAME => trstrk DATE PLOTTED => 04-FEB-2010 TIME PLOTTED => 10:49

DIST	COUNTY	ROUTE	POST MILES TOTAL PROJECT	SHEET No	TOTAL SHEETS
12	Ora	22,405, 605	R0.3/R0.9, 22.3/24.0,3.0/R1.6	1895	1929

REGISTERED CIVIL ENGINEER 07-27-09 DATE

2-1-10
PLANS APPROVAL DATE

REGISTERED PROFESSIONAL ENGINEER A. Priley No. C 73375 Exp. 12-31-10 CIVIL STATE OF CALIFORNIA

The State of California or its officers or agents shall not be responsible for the accuracy or completeness of electronic copies of this plan sheet.

OCTA
550 SOUTH MAIN STREET
ORANGE, CA 92863

TRC
21 TECHNOLOGY DR
IRVINE, CA 92618

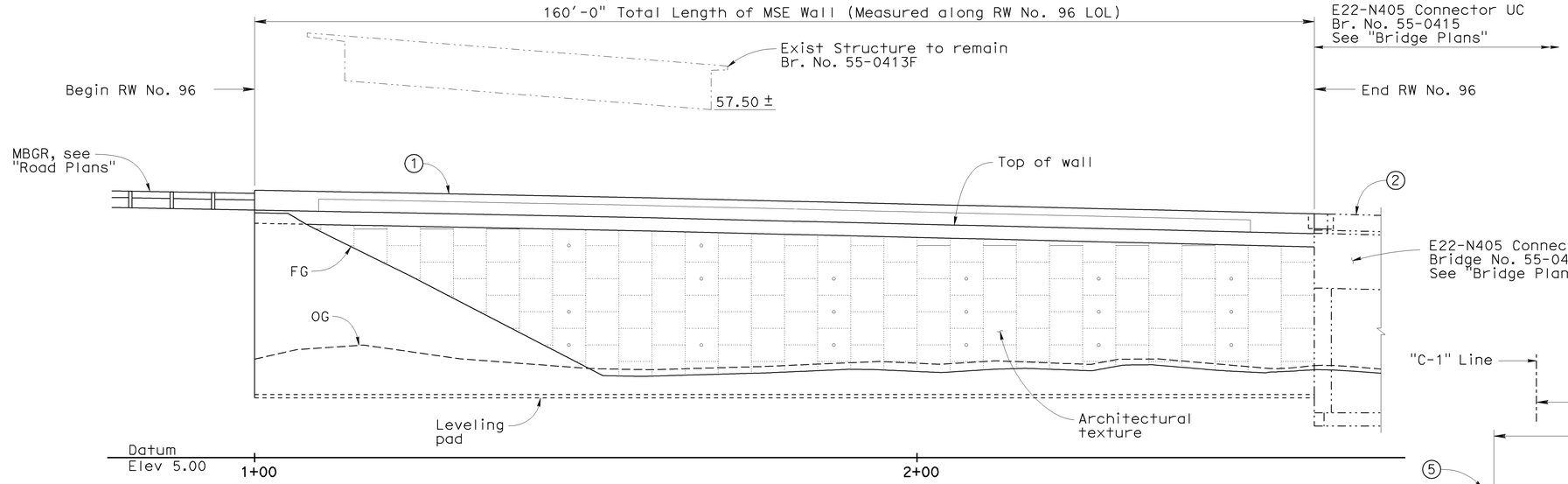

DEVELOPED ELEVATION

1" = 10'

Note: Piles not shown

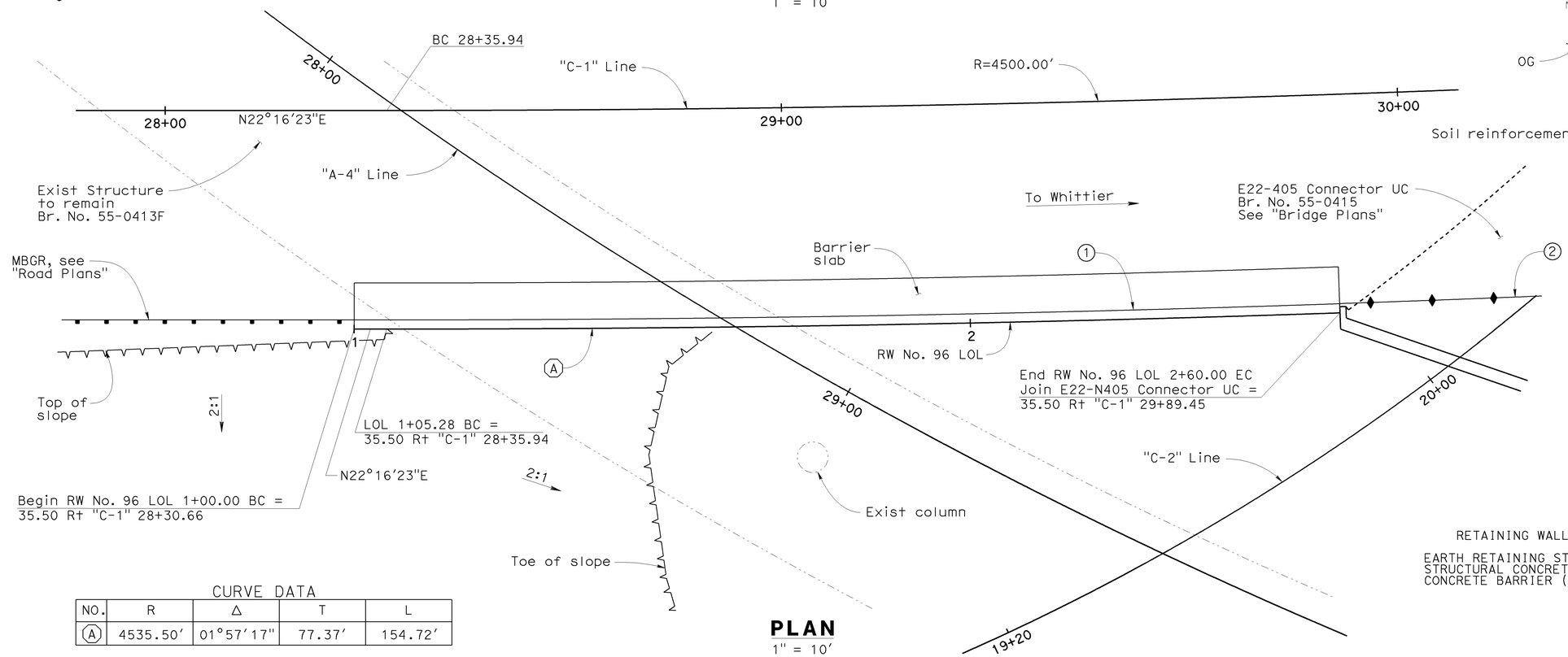

PLAN

1" = 10'

CURVE DATA

NO.	R	Δ	T	L
(A)	4535.50'	01°57'17"	77.37'	154.72'

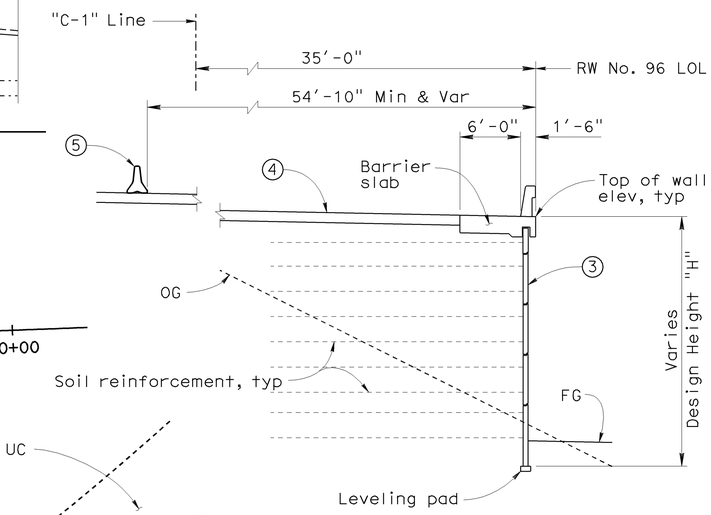

TYPICAL SECTION

No Scale

LEGEND

1. Concrete Barrier (Type 736 Mod)
2. Concrete Barrier (Type 736B), see "Road Plans"
3. Precast Concrete Panels
4. Roadway Section, see "Road Plans"
5. Temporary Railing (Type K)

RETAINING WALL NO 96 — BR NO 55E0106

QUANTITIES

EARTH RETAINING STRUCTURE, LOCATION 6	4,000	SQFT
STRUCTURAL CONCRETE, BARRIER SLAB	76	CY
CONCRETE BARRIER (TYPE 736 MODIFIED)	160	LF

Sudhakar Vatti
DESIGN OVERSIGHT Sudhakar Vatti
8-10-09
SIGN OFF DATE

	BY	CHECKED		
DESIGN	A. Priley	K. Michalski	LOAD FACTOR DESIGN (LFD)	LIVE LOADING: HS20-44 AND ALTERNATIVE AND PERMIT DESIGN LOAD
DETAILS	A. Priley	J. Hermstad	LAYOUT	K. Michalski / A. Priley
QUANTITIES	A. Priley	J. Wong	SPECIFICATIONS	EL Tyk / J. Hermstad

PREPARED FOR THE STATE OF CALIFORNIA DEPARTMENT OF TRANSPORTATION

A. Priley
PROJECT ENGINEER

BRIDGE NO. 55E0106
POST MILES R0.1 (Ora)

RETAINING WALL NO. 96
GENERAL PLAN

DESIGN GENERAL PLAN SHEET (ENGLISH) (REV.2/25/05)

ORIGINAL SCALE IN INCHES FOR REDUCED PLANS 0 1 2 3

CU 12235
EA 071631

DISREGARD PRINTS BEARING EARLIER REVISION DATES

REVISION DATES (PRELIMINARY STAGE ONLY) 10/16/08 04/06/09 07/27/09

SHEET 1 OF 15

FILE => 55-e0106-a-gp.dgn

USERNAME => ttrstrk DATE PLOTTED => 04-FEB-2010 TIME PLOTTED => 10:49

DIST	COUNTY	ROUTE	POST MILES TOTAL PROJECT	SHEET No	TOTAL SHEETS
12	Ora	22,405, 605	R0.3/R0.9, 22.3/24.0,3.0/R1.6	1896	1929

REGISTERED CIVIL ENGINEER 07-27-09 DATE

2-1-10
PLANS APPROVAL DATE

The State of California or its officers or agents shall not be responsible for the accuracy or completeness of electronic copies of this plan sheet.

REGISTERED PROFESSIONAL ENGINEER A. Priley No. C 73375 Exp. 12-31-10 CIVIL STATE OF CALIFORNIA

OCTA
550 SOUTH MAIN STREET
ORANGE, CA 92863

TRC
21 TECHNOLOGY DR
IRVINE, CA 92618

STANDARD PLANS DATED MAY 2006

A10A	Acronyms and Abbreviations (Sheet 1 of 2)
A10B	Acronyms and Abbreviations (Sheet 2 of 2)
A10C	Symbols (Sheet 1 of 2)
A10D	Symbols (Sheet 2 of 2)
A62B	Limits of Payment for Excavation and Backfill - Bridge Surcharge and Wall
A74	Survey Monuments
B11-56	Concrete Barrier Type 736
D102	Underdrains
P1	Jointed Plain Concrete Pavement
P10	Concrete Pavement - Dowel Bar Details

Standard Plan Sheet No.

Detail No.

GENERAL NOTES (MSE)

Live loading: Surcharge = 240 lb/ft^2

Soil parameters:

Internal design ϕ = 34°, γ = 120 lb/ft^3

External design ϕ(Backfill) = 34°, γ = 120 lb/ft^3

ϕ(Foundation) = 30°

Precast concrete panels:

f'c = 4,000 psi (Concrete compressive strength at 28 days)

fy = 60,000 psi (Yield strength of reinforcement)

Soil reinforcement:

Welded wire mats: fy = 65,000 psi (Yield strength)

Coupler: fy = 36,000 psi (Yield strength)

Corrosion rate = 1.1 mils/year

Reinforced concrete:

f'c = 3,600 psi, except as noted

(Concrete compressive strength at 28 days)

fy = 60,000 psi (Yield strength of reinforcement)

MSE = Mechanically stabilized embankment

INDEX TO PLANS

SHEET NO.	TITLE
1	General Plan
2	Index to Plans
3	Structure Plan
4	Panel Details No. 1
5	Panel Details No. 2
6	Wall Details
7	Connection Detail
8	Architectural Panel Layout
9	Architectural Details No. 1
10	Architectural Details No. 2
11	Architectural Details No. 3
12	Log of Test Borings No. 1
13	Log of Test Borings No. 2
14	Log of Test Borings No. 3
15	Log of Test Borings No. 4 (As-Built)

LEGEND

Limits of structure excavation

Limits of structure backfill

Limits of permeable material

NOTES

1. Limits to FS except to GP when in roadway section
2. Locate 8" perforated underdrain below bottom level of welded wire mats
3. Maximum spacing of outlet pipes is 200 ft
4. At sags in profile of underdrain, install outlet pipe for each direction of flow

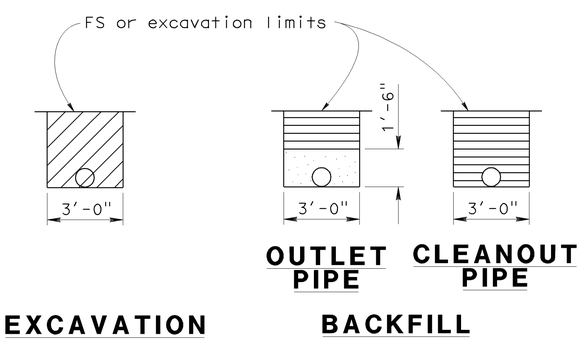

OUTLET OR CLEANOUT PIPE FOR UNDERDRAIN

No Scale

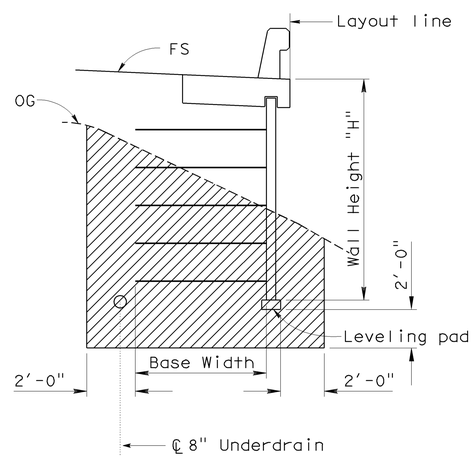

LIMITS OF EXCAVATION

No Scale

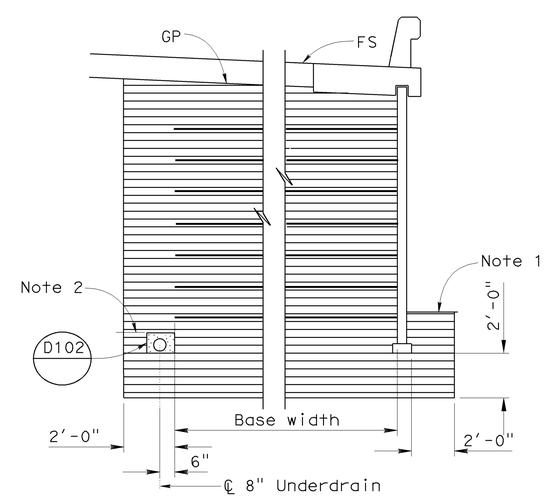

ROADWAY SECTION WITH BASE WIDTH 16' OR GREATER

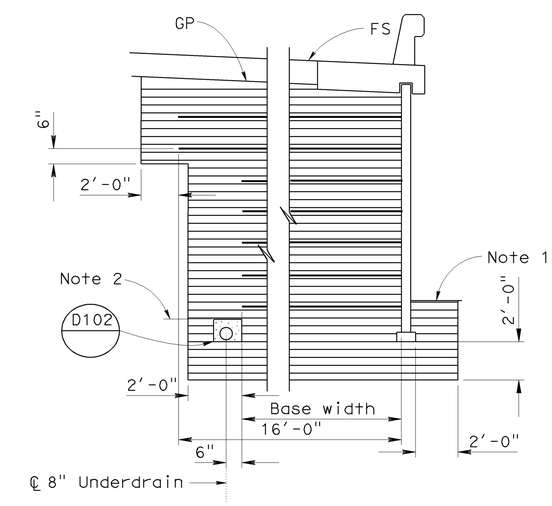

ROADWAY SECTION WITH BASE WIDTH LESS THAN 16'

LIMITS OF BACKFILL

No Scale

Sudhakar Vatti
DESIGN OVERSIGHT Sudhakar Vatti
8-10-09
SIGN OFF DATE

	BY	CHECKED
DESIGN	A. Priley	K. Michalski
DETAILS	A. Priley	J. Hermstad
QUANTITIES	A. Priley	J. Wong

PREPARED FOR THE STATE OF CALIFORNIA DEPARTMENT OF TRANSPORTATION

A. Priley
PROJECT ENGINEER

BRIDGE NO. 55E0106
POST MILE R0.1 (Ora)

RETAINING WALL NO. 96
INDEX TO PLANS

DESIGN DETAIL SHEET (ENGLISH) (REV. 2/25/05)

ORIGINAL SCALE IN INCHES FOR REDUCED PLANS 0 1 2 3

CU 12235
EA 071631

DISREGARD PRINTS BEARING EARLIER REVISION DATES 04/06/09 07/27/09

REVISION DATES (PRELIMINARY STAGE ONLY)

SHEET 2 OF 15

FILE => 55-e0106-a-itp.dgn

USERNAME => trsttk DATE PLOTTED => 04-FEB-2010 TIME PLOTTED => 10:49

DIST	COUNTY	ROUTE	POST MILES TOTAL PROJECT	SHEET No	TOTAL SHEETS
12	Ora	22,405, 605	R0.3/R0.9, 22.3/24.0,3.0/R1.6	1897	1929

REGISTERED CIVIL ENGINEER 07-27-09 DATE

2-1-10
PLANS APPROVAL DATE

REGISTERED PROFESSIONAL ENGINEER A. Priley No. C 73375 Exp. 12-31-10 CIVIL STATE OF CALIFORNIA

The State of California or its officers or agents shall not be responsible for the accuracy or completeness of electronic copies of this plan sheet.

OCTA
550 SOUTH MAIN STREET
ORANGE, CA 92863

TRC
21 TECHNOLOGY DR
IRVINE, CA 92618

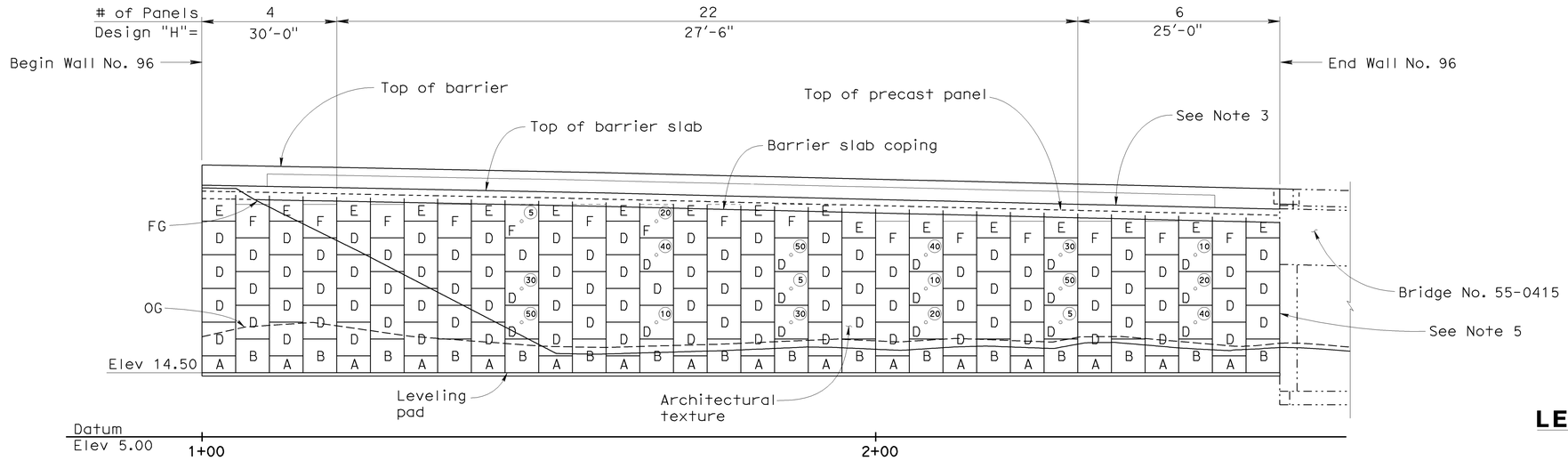

DEVELOPED ELEVATION

1" = 10'

LEGEND

Indicates interval in years from time of construction to time of removal of inspection wire

Indicates location of inspection wire, see "Wall Details" sheet

Indicates panel type designation (See Note 1)

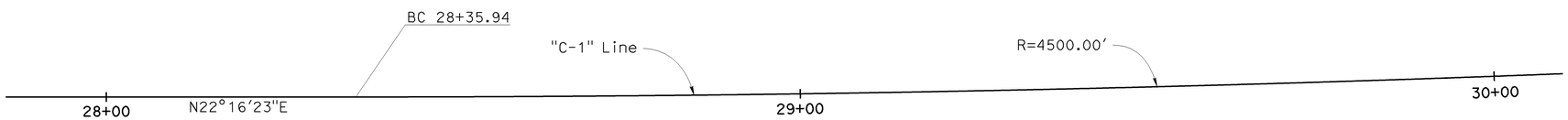

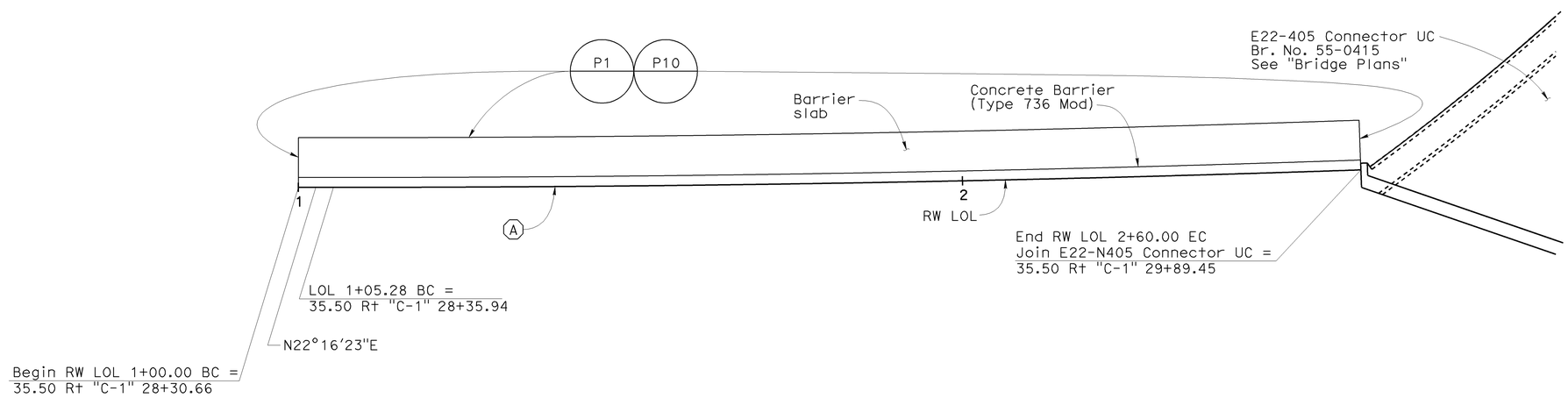

PLAN

1" = 10'

NOTES

1. For precast panel details, see "Panel Details No. 1" and "Panel Details No. 2" sheets
2. For architectural texture and details, see "Architectural Panel Layout" and "Architectural Details No. 1" thru "Architectural Details No. 3" sheets
3. For top of wall elevations, see "Wall Details" sheet
4. For barrier slab details, see "Wall Details" sheet
5. For connection details between precast concrete panels and concrete wall, see "Wall Details" sheet
6. Elevation shown at top of leveling pad

CURVE DATA

NO.	R	Δ	T	L
A	4535.50'	01°57'17"	77.37'	154.72'

Sudhakar Vatti
DESIGN OVERSIGHT Sudhakar Vatti

8-10-09
SIGN OFF DATE

	BY	CHECKED
DESIGN	A. Priley	K. Michalski
DETAILS	A. Priley	J. Hermstad
QUANTITIES	A. Priley	J. Wong

PREPARED FOR THE STATE OF CALIFORNIA DEPARTMENT OF TRANSPORTATION

A. Priley
PROJECT ENGINEER

BRIDGE NO. 55E0106
POST MILE R0.1 (Ora)

RETAINING WALL NO. 96
STRUCTURE PLAN

DESIGN DETAIL SHEET (ENGLISH) (REV. 2/25/05)

ORIGINAL SCALE IN INCHES FOR REDUCED PLANS 0 1 2 3

CU 12235
EA 071631

DISREGARD PRINTS BEARING EARLIER REVISION DATES

REVISION DATES (PRELIMINARY STAGE ONLY) 04/06/09 07/27/09

SHEET 3 OF 15

FILE => 55-e0106-c-sp.dgn

USERNAME => trstrk DATE PLOTTED => 04-FEB-2010 TIME PLOTTED => 10:50

DIST	COUNTY	ROUTE	POST MILES TOTAL PROJECT	SHEET No	TOTAL SHEETS
12	Ora	22,405, 605	R0.3/R0.9, 22.3/24.0,3.0/R1.6	1898	1929

REGISTERED CIVIL ENGINEER 07-27-09 DATE

2-1-10
PLANS APPROVAL DATE

REGISTERED PROFESSIONAL ENGINEER A. Priley No. C 73375 Exp. 12-31-10 CIVIL STATE OF CALIFORNIA

The State of California or its officers or agents shall not be responsible for the accuracy or completeness of electronic copies of this plan sheet.

OCTA
550 SOUTH MAIN STREET
ORANGE, CA 92863

TRC
21 TECHNOLOGY DR
IRVINE, CA 92618

NOTES

1. Place reinforced elastomeric bearing pads in all of the panel joints. Place one in each vertical joint at intersections with horizontal joints. Place two per panel in each horizontal joint.
   ¾" × 2⅜" × 6" for vertical joints
   ¾" × 4" × 6" for horizontal joints
2. Top of panels C, E and F shall be cast to conform to wall profile
3. Omit wire mat when vertical spacing between mats is less than 6"
4. Top welded wire mat in wall shall be sloped -5% min to -15% max with respect to the roadway slope. Wire mats below the top level may be sloped down as required to maintain 6" min separation from other mats

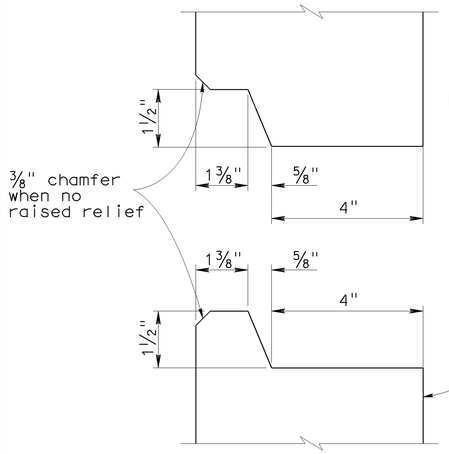

HORIZONTAL JOINT DETAIL

6" = 1'-0"

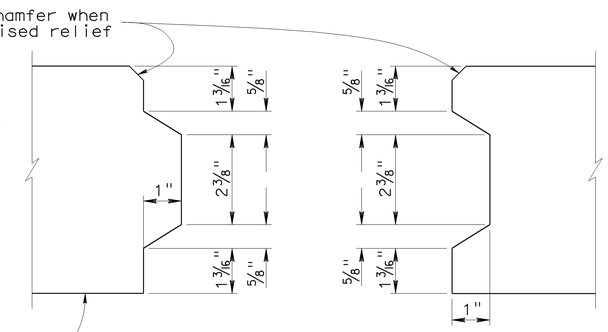

VERTICAL JOINT DETAIL

6" = 1'-0"

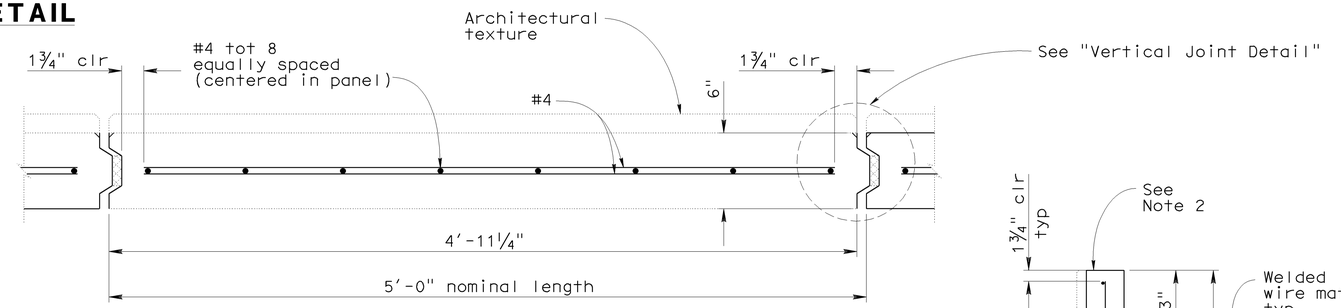

PRECAST PANEL PLAN

2" = 1'-0"

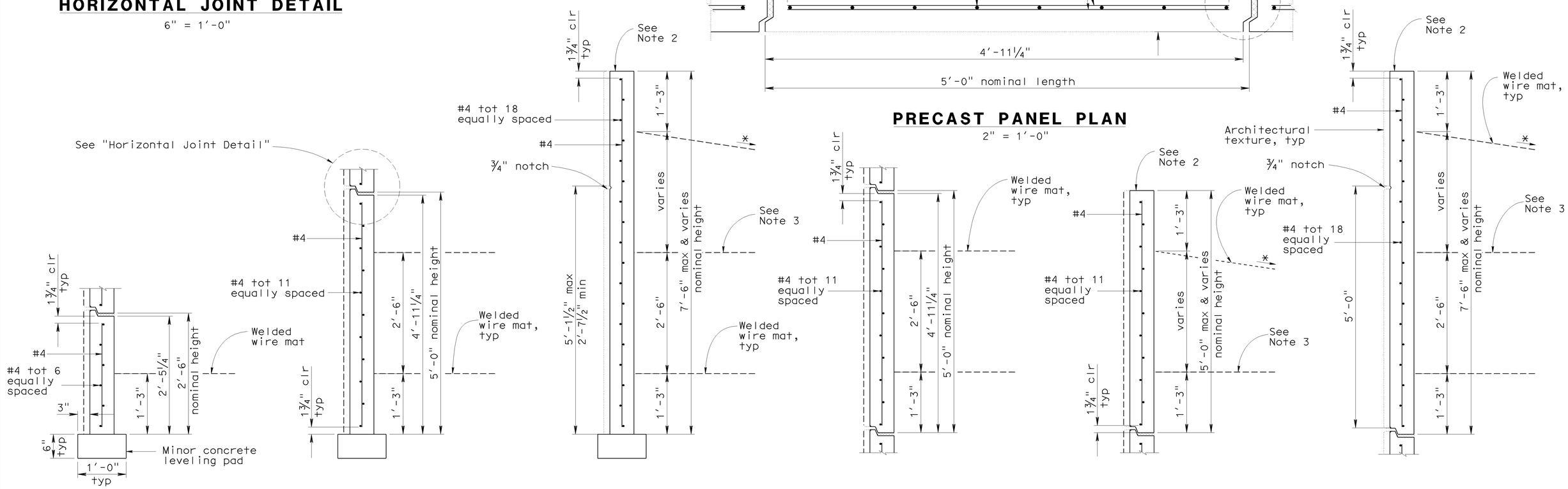

PANEL A PANEL B PANEL C PANEL D PANEL E PANEL F

PRECAST PANEL SECTIONS

1" = 1'-0"
* See Note 4

Sudhakar Vatti
DESIGN OVERSIGHT Sudhakar Vatti
8-10-09
SIGN OFF DATE

	BY	CHECKED
DESIGN	A. Priley	K. Michalski
DETAILS	A. Priley	J. Hermstad
QUANTITIES	A. Priley	J. Wong

PREPARED FOR THE STATE OF CALIFORNIA DEPARTMENT OF TRANSPORTATION

A. Priley
PROJECT ENGINEER

BRIDGE NO. 55E0106
POST MILE R0.1 (Ora)

RETAINING WALL NO. 96
PANEL DETAILS NO. 1

DISREGARD PRINTS BEARING EARLIER REVISION DATES → REVISION DATES (PRELIMINARY STAGE ONLY) 04/06/09 07/27/09

SHEET 4 OF 15

DESIGN DETAIL SHEET (ENGLISH) (REV. 2/25/05)

ORIGINAL SCALE IN INCHES FOR REDUCED PLANS 0 1 2 3

CU 12235
EA 071631

FILE => 55-e0106-f-pdt01.dgn

USERNAME => trstrk DATE PLOTTED => 04-FEB-2010 TIME PLOTTED => 10:50

DIST	COUNTY	ROUTE	POST MILES TOTAL PROJECT	SHEET No	TOTAL SHEETS
12	Ora	22,405, 605	R0.3/R0.9, 22.3/24.0,3.0/R1.6	1899	1929

REGISTERED CIVIL ENGINEER 07-27-09 DATE

2-1-10
PLANS APPROVAL DATE

REGISTERED PROFESSIONAL ENGINEER A. Priley No. C 73375 Exp. 12-31-10 CIVIL STATE OF CALIFORNIA

The State of California or its officers or agents shall not be responsible for the accuracy or completeness of electronic copies of this plan sheet.

OCTA
550 SOUTH MAIN STREET
ORANGE, CA 92863

TRC
21 TECHNOLOGY DR
IRVINE, CA 92618

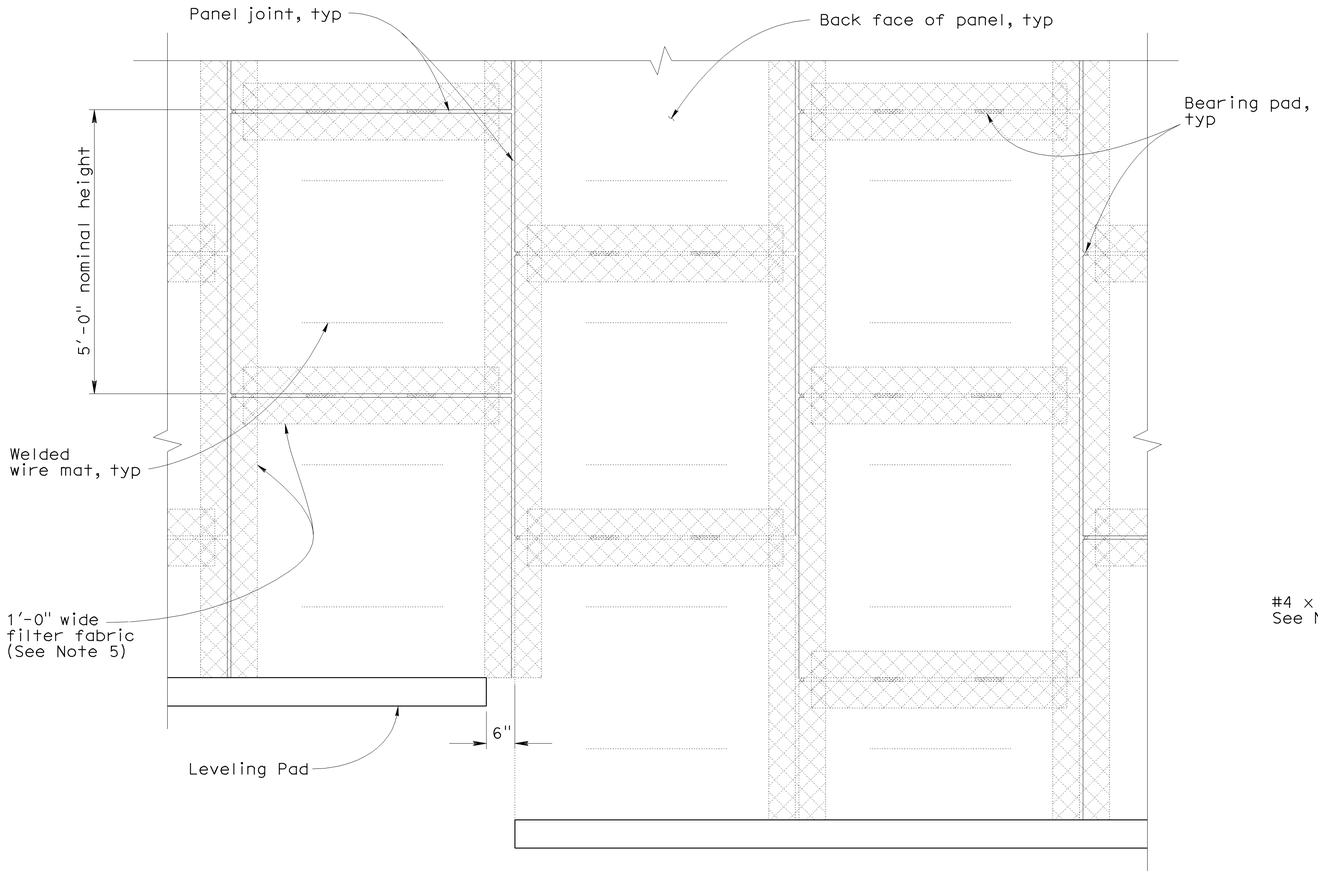

BACK FACE OF WALL ELEVATION

3/4" = 1'-0"

NOTES

1. Distance as required to permit coupler to be swaged
2. Place bar centered on connector mat but not welded to it
3. Length equals "Base width" of wall as shown in the "Soil "Reinforcement Table" except it shall not be less than 16'-0" for the top 2 levels of mats at the top of the wall
4. See the "Soil Reinforcement Table" for longintudinal wire size and transverse wire spacing
5. Bond a strip of filter fabric 1'-0" wide over the full length of all panel joints

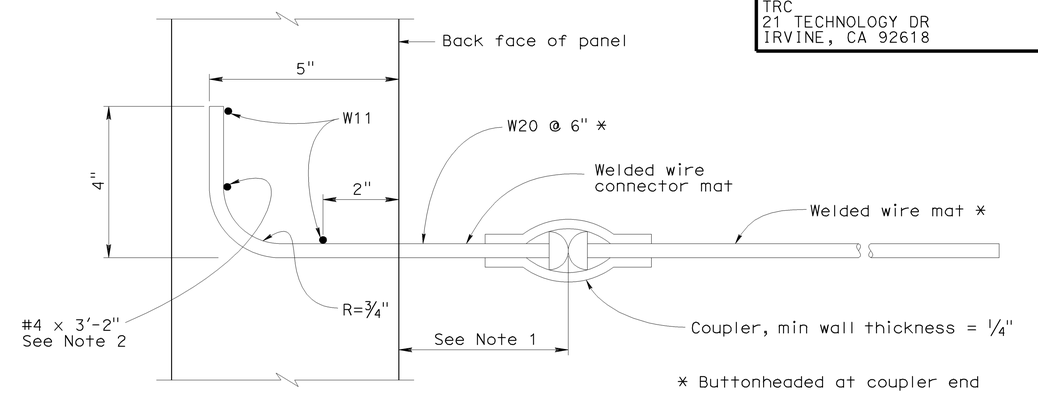

* Buttonheaded at coupler end

Note: Panel reinforcement not shown

SECTION A-A

No Scale

SOIL REINFORCEMENT TABLE

Design "H"	10'-0"	12'-6"	15'-0"	17'-6"	20'-0"	22'-6"	25'-0"	27'-6"
Base Width	8'-0"	9'-0"	11'-0"	12'-0"	14'-0"	16'-0"	18'-0"	19'-0"
Top level of mesh: Levels below:	1-W11x6" 2-W11x9" W11x12"		1-W11x6" 2-W11x9" 2-W11x12" W11x18"			1-W11x6" 2-W11x12" 2-W11x18" W11x24"		

Design "H"	30'-0"	32'-6"	35'-0"	37'-6"	40'-0"	42'-6"	45'-0"	47'-6"
Base Width	21'-0"	23'-0"	25'-0"	26'-0"	28'-0"	30'-0"	32'-0"	33'-0"
Top level of mesh: Levels below:	1-W11x9" 1-W11x12" 2-W11x18" 6-W11x24" W15x30"		1-W11x9" 1-W11x18" 8-W11x24" W15x30"			1-W11x9" 9-W11x24" 5-W15x30" W20x30"		

Note: Mesh is indicated sequentially from top level of mesh to bottom level of mesh

LEGEND

of levels — Longitudinal Wire Size

2-W11x12"

Transverse Spacing

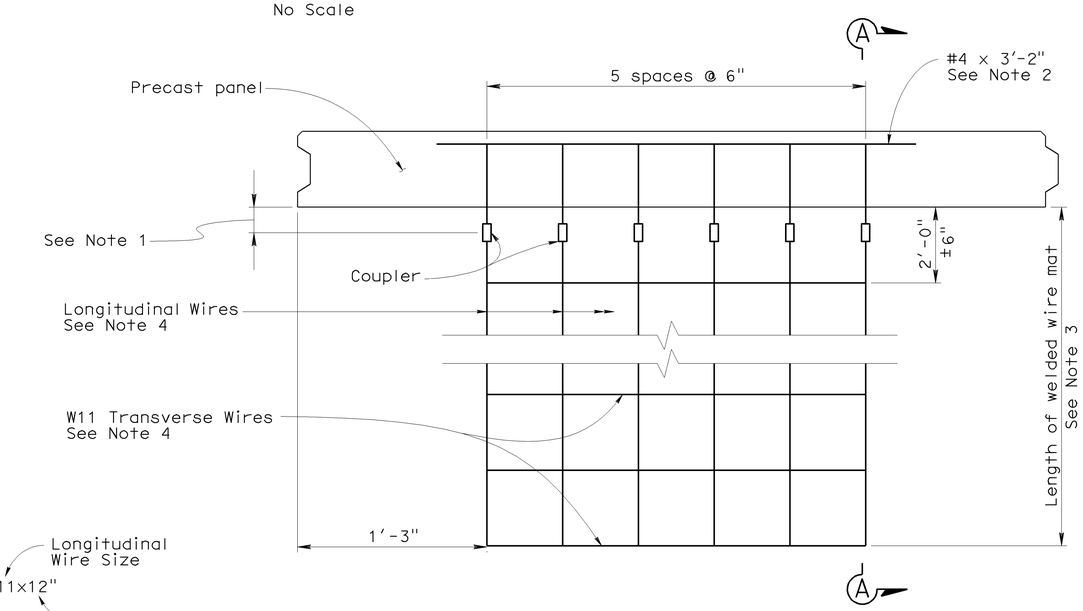

WELDED WIRE MAT DETAIL

No Scale

Sudhakar Vatti
DESIGN OVERSIGHT Sudhakar Vatti

8-10-09
SIGN OFF DATE

	BY	CHECKED
DESIGN	A. Priley	K. Michalski
DETAILS	A. Priley	J. Hermstad
QUANTITIES	A. Priley	J. Wong

PREPARED FOR THE STATE OF CALIFORNIA DEPARTMENT OF TRANSPORTATION

A. Priley
PROJECT ENGINEER

BRIDGE NO. 55E0106
POST MILE R0.1 (Ora)

RETAINING WALL NO. 96
PANEL DETAILS NO. 2

DESIGN DETAIL SHEET (ENGLISH) (REV. 2/25/05)

ORIGINAL SCALE IN INCHES FOR REDUCED PLANS 0 1 2 3

CU 12235
EA 071631

DISREGARD PRINTS BEARING EARLIER REVISION DATES

REVISION DATES (PRELIMINARY STAGE ONLY) 04/06/09 07/27/09

SHEET 5 OF 15

FILE => 55-e0106-f-pdt02.dgn

USERNAME => trstrk DATE PLOTTED => 04-FEB-2010 TIME PLOTTED => 10:50

DIST	COUNTY	ROUTE	POST MILES TOTAL PROJECT	SHEET No	TOTAL SHEETS
12	Ora	22,405, 605	R0.3/R0.9, 22.3/24.0,3.0/R1.6	1900	1929

REGISTERED CIVIL ENGINEER 07-27-09 DATE

2-1-10
PLANS APPROVAL DATE

REGISTERED PROFESSIONAL ENGINEER A. Priley No. C 73375 Exp. 12-31-10 CIVIL STATE OF CALIFORNIA

The State of California or its officers or agents shall not be responsible for the accuracy or completeness of electronic copies of this plan sheet.

OCTA
550 SOUTH MAIN STREET
ORANGE, CA 92863

TRC
21 TECHNOLOGY DR
IRVINE, CA 92618

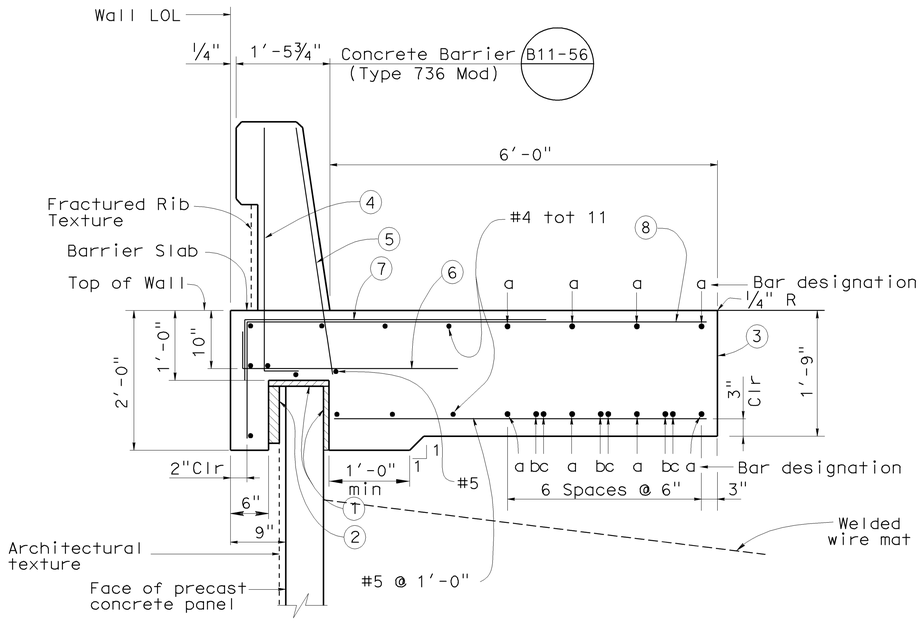

SECTION AT TOP OF WALL WITH BARRIER SLAB AND CONCRETE BARRIER

No Scale

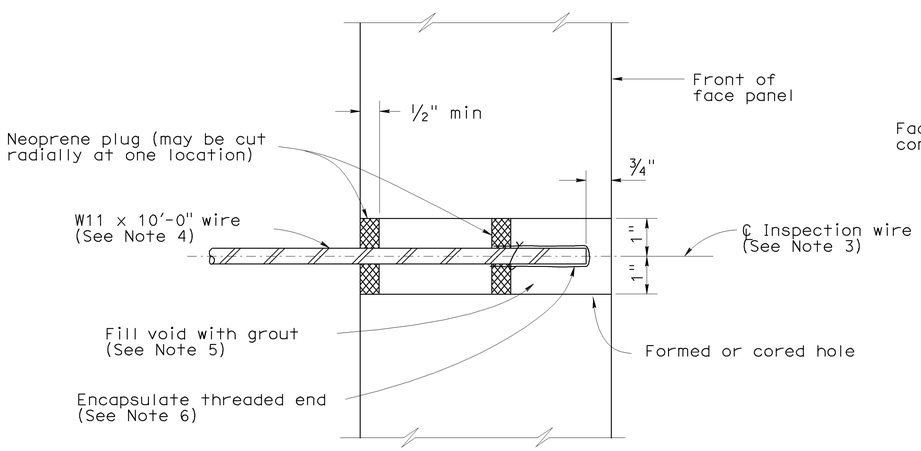

SECTION THRU INSPECTION WIRE

No Scale

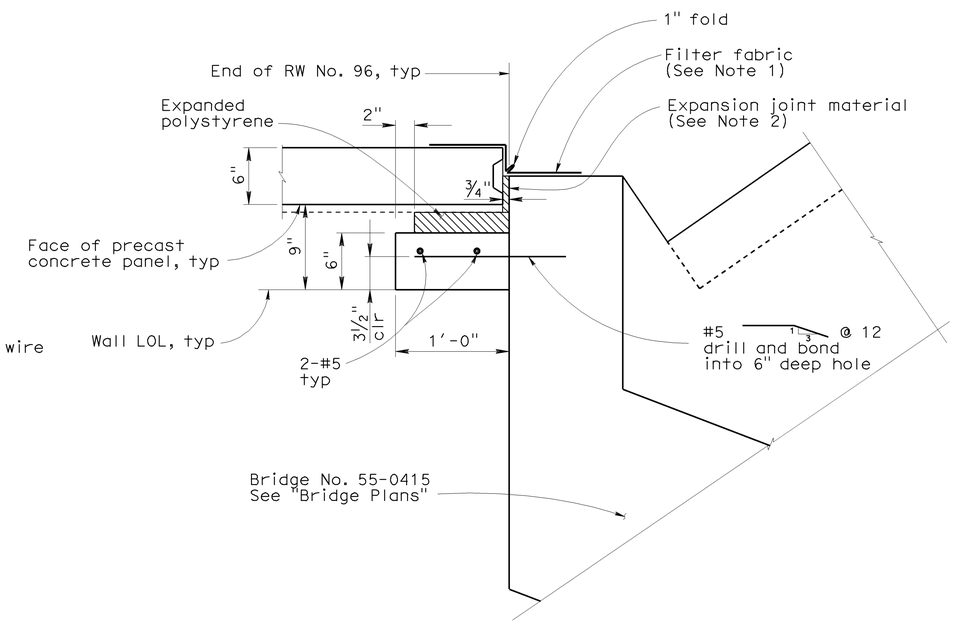

PRECAST PANEL TO CONCRETE WALL JOINT DETAILS

No Scale

NOTES

1. Bond a strip of filter fabric, 1'-6" wide, to back of precast concrete panels and the adjacent concrete wall for entire length of vertical joint
2. Bond expansion joint material to the concrete wall
3. Center inspection wire in panel
4. Fabricate inspection wires from W11 wire representative of the welded wire mats, with 3/8" dia - 16 UNC threads (Unified Coarse threads) for at least 1 1/2" of one end
5. Place inspection wire horizontal and perpendicular to the wall panel prior to backfilling. After backfill placement to a level at least 2'-0" above the inspection wire, dry pack opening with 1000 to 1500 psi mortar. Trowel mortar smooth and flush with face of panel
6. Encapsulate threaded end with corrosion inhibiting mastic and secure round vinyl cover with nylon tie
7. Clearance to reinforcing steel in concrete barrier to be 1"
8. Not all barrier reinforcement shown
9. No expansion joints in concrete barrier or barrier slab within limits of precast walls with lightweight fill (cellular concrete)

LEGEND

"a" bar = #6 continuous.
"b" bar = #6 X 59'-0"
"c" bar = #6 X 49'-2"

Place "b" and "c" bars at beginning and ending ends of barrier slab

(1) 1" Expanded polystyrene

(2) 1 1/2" to 3" Expanded polystyrene. Recess expanded polystyrene 2" into coping

(3) Contact joint

(4) #5 6 1/4" @ 16 (To be in place prior to barrier slab concrete)

(5) #5 6 1/4" @ 8 (To be in place prior to barrier slab concrete)

(6) #5 6 1/4" 3'-4" @ 12

(7) #5 4'-7" @ 12 bundled with (8) bars

(8) #5 7'-2" @ 12

TOP OF WALL ELEVATIONS

RW 96 LOL Station	Top of Wall Elevation (ft)
1+00.00	42.34
1+12.50	42.11
1+25.00	41.87
1+37.50	41.63
1+50.00	41.39
1+62.50	41.11
1+75.00	40.82
1+87.50	40.52
2+00.00	40.22
2+12.50	39.92
2+25.00	39.63
2+37.50	39.33
2+50.00	39.03
2+60.00	38.79

Sudhakar Vatti
DESIGN OVERSIGHT Sudhakar Vatti
8-10-09
SIGN OFF DATE

	BY	CHECKED
DESIGN	A. Priley	K. Michalski
DETAILS	A. Priley	J. Hermstad
QUANTITIES	A. Priley	J. Wong

PREPARED FOR THE STATE OF CALIFORNIA DEPARTMENT OF TRANSPORTATION

A. Priley
PROJECT ENGINEER

BRIDGE NO. 55E0106
POST MILE R0.1 (Ora)

RETAINING WALL NO. 96
WALL DETAILS

DESIGN DETAIL SHEET (ENGLISH) (REV. 2/25/05)

ORIGINAL SCALE IN INCHES FOR REDUCED PLANS 0 1 2 3

CU 12235
EA 071631

DISREGARD PRINTS BEARING EARLIER REVISION DATES

REVISION DATES (PRELIMINARY STAGE ONLY) 04/06/09 07/21/09

SHEET 6 OF 15

FILE => 55-e0106-g-wdt.dgn

USERNAME => trstrk DATE PLOTTED => 04-FEB-2010 TIME PLOTTED => 10:50