DIST	COUNTY	ROUTE	POST MILES TOTAL PROJECT	SHEET No	TOTAL SHEETS
12	Ora	22,405, 605	R0.3/R0.9, 22.3/24.0,3.0/R1.6	1901	1929

REGISTERED CIVIL ENGINEER 07-27-09 DATE

2-1-10
PLANS APPROVAL DATE

REGISTERED PROFESSIONAL ENGINEER A. Priley No. C 73375 Exp. 12-31-10 CIVIL STATE OF CALIFORNIA

The State of California or its officers or agents shall not be responsible for the accuracy or completeness of electronic copies of this plan sheet.

OCTA
550 SOUTH MAIN STREET
ORANGE, CA 92863

TRC
21 TECHNOLOGY DR
IRVINE, CA 92618

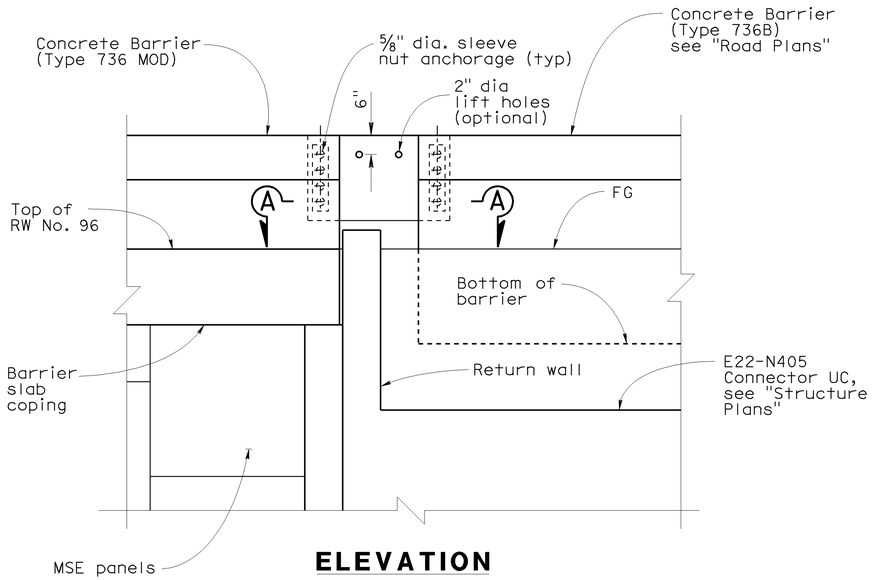

ELEVATION
1/2" = 1'-0"

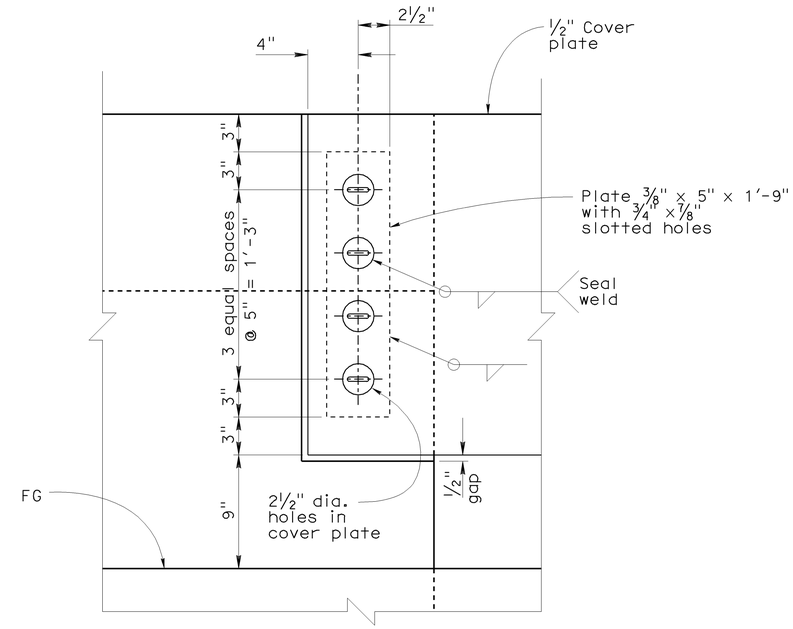

SECTION B-B
no scale

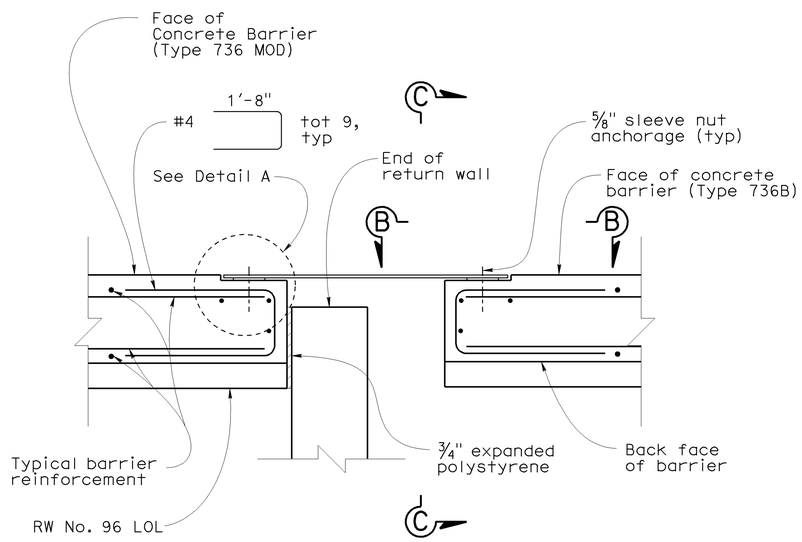

SECTION A-A
1" = 1'-0"

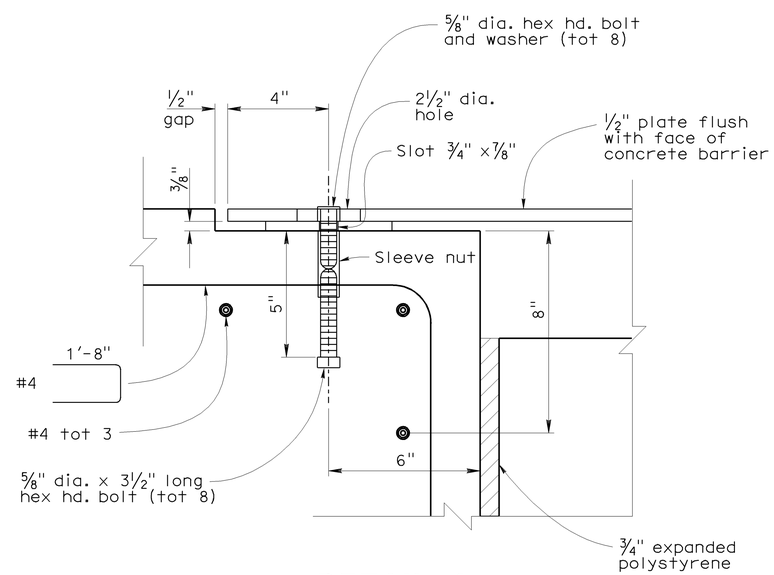

DETAIL A
no scale

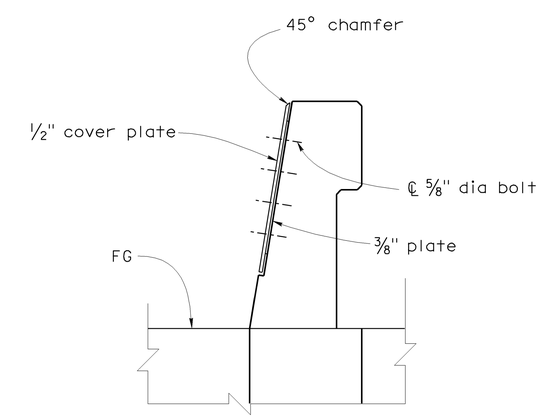

SECTION C-C
1" = 1'-0"

Sudhakar Vatti
DESIGN OVERSIGHT Sudhakar Vatti
8-10-09
SIGN OFF DATE

	BY	CHECKED
DESIGN	A. Priley	K. Michalski
DETAILS	A. Priley	J. Hermstad
QUANTITIES	A. Priley	J. Wong

PREPARED FOR THE STATE OF CALIFORNIA DEPARTMENT OF TRANSPORTATION

A. Priley
PROJECT ENGINEER

BRIDGE NO. 55E0106
POST MILE R0.1 (Ora)

RETAINING WALL NO. 96
CONNECTION DETAIL

DESIGN DETAIL SHEET (ENGLISH) (REV. 2/25/05)

ORIGINAL SCALE IN INCHES FOR REDUCED PLANS 0 1 2 3

CU 12235
EA 071631

DISREGARD PRINTS BEARING EARLIER REVISION DATES

REVISION DATES (PRELIMINARY STAGE ONLY) 04/06/09 07/27/09

SHEET 7 OF 15

FILE => 55-e0106-h-cdt.dgn

USERNAME => ttstrk DATE PLOTTED => 04-FEB-2010 TIME PLOTTED => 10:50

DIST	COUNTY	ROUTE	POST MILES TOTAL PROJECT	SHEET No	TOTAL SHEETS
12	Ora	22, 405, 605	R0.3/R0.9, 22.3/24.0,3.0/R1.6	1902	1929

LICENSED LANDSCAPE ARCHITECT

2-1-10
PLANS APPROVAL DATE

LICENSED LANDSCAPE ARCHITECT
CATHY L. JOHNSON
NO. 4545
01-31-10
Renewal Date
07-27-09
Date
STATE OF CALIFORNIA

The State of California or its officers or agents shall not be responsible for the accuracy or completeness of electronic copies of this plan sheet.

OCTA
550 SOUTH MAIN STREET
ORANGE, CA 92863

RBF CONSULTING
14725 ALTON PARKWAY
IRVINE, CA 92618

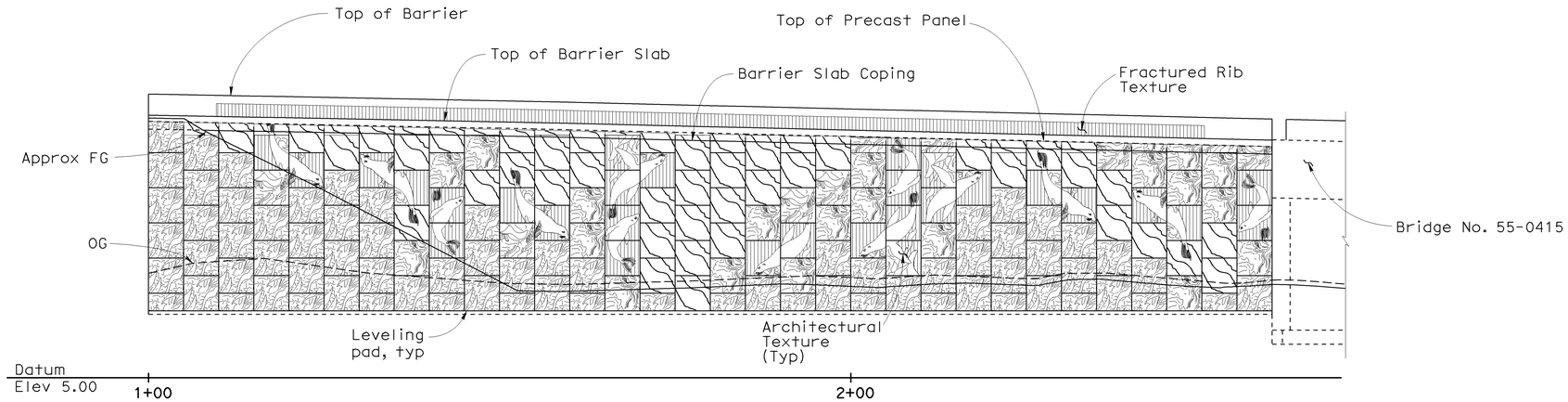

DEVELOPED ELEVATION

1" = 10'

Sudhakar Vatti
DESIGN OVERSIGHT
Sudhakar Vatti

8-10-09
SIGN OFF DATE

DESIGN DETAIL SHEET (ENGLISH) (REV. 2/25/05)

	BY	CHECKED
DESIGN	C. JOHNSON	A. SU
DETAILS	R. KELCHER	A. SU
QUANTITIES	A. PRILEY	J. WONG

ORIGINAL SCALE IN INCHES FOR REDUCED PLANS 0 1 2 3

PREPARED FOR THE
STATE OF CALIFORNIA
DEPARTMENT OF TRANSPORTATION

A. PRILEY
PROJECT ENGINEER

CU 12235
EA 071631

BRIDGE NO. 55E0106
POST MILE R0.1 (Ora)

RETAINING WALL NO. 96
ARCHITECTURAL PANEL LAYOUT

DISREGARD PRINTS BEARING EARLIER REVISION DATES

REVISION DATES (PRELIMINARY STAGE ONLY) 04/06/09 07/21/09

SHEET 8 OF 15

FILE => 55-e0106-s-arch01.dgn

USERNAME => trstrik DATE PLOTTED => 04-FEB-2010 TIME PLOTTED => 10:50

DIST	COUNTY	ROUTE	POST MILES TOTAL PROJECT	SHEET No	TOTAL SHEETS
12	Ora	22, 265, 605	R0.3/R0.9, 22.3/24.0,3.0/R1.6	1903	1929

LICENSED LANDSCAPE ARCHITECT

2-1-10
PLANS APPROVAL DATE

LICENSED LANDSCAPE ARCHITECT
CATHY L. JOHNSON
NO. 4545
01-31-10
Renewal Date
07-27-09
Date
STATE OF CALIFORNIA

The State of California or its officers or agents shall not be responsible for the accuracy or completeness of electronic copies of this plan sheet.

OCTA
550 SOUTH MAIN STREET
ORANGE, CA 92863

RBF CONSULTING
14725 ALTON PARKWAY
IRVINE, CA 92618

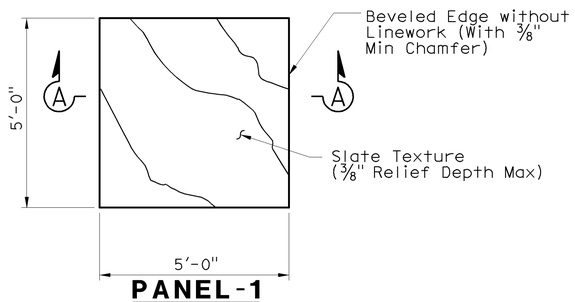

PANEL-1
1/2" = 1'-0"

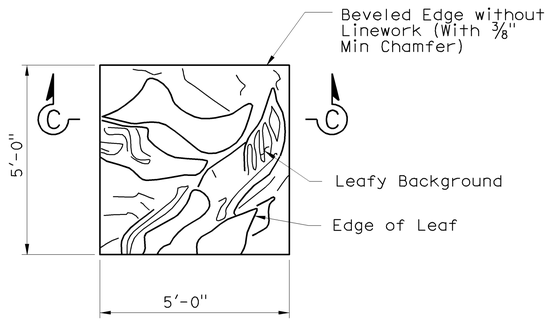

PANEL-3
1/2" = 1'-0"

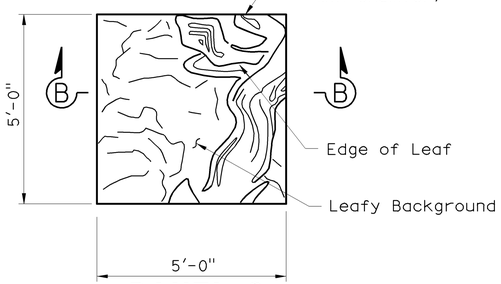

PANEL-2
1/2" = 1'-0"

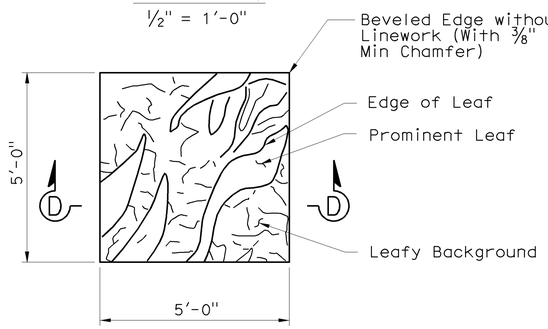

PANEL-4
1/2" = 1'-0"

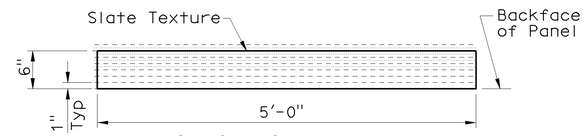

SECTION A-A
1" = 1'-0"

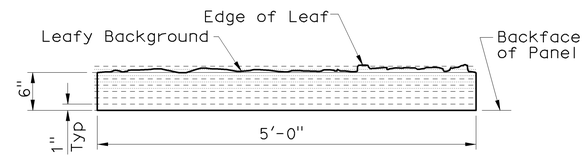

SECTION B-B
1" = 1'-0"

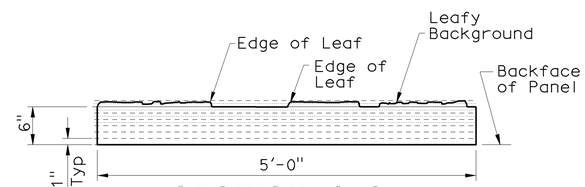

SECTION C-C
1" = 1'-0"

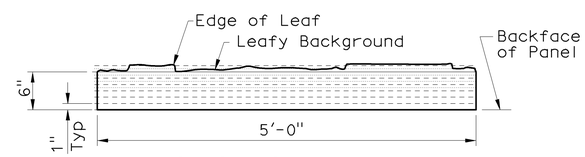

SECTION D-D
1" = 1'-0"

Sudhakar Vatti
DESIGN OVERSIGHT Sudhakar Vatti
8-10-09
SIGN OFF DATE

DESIGN DETAIL SHEET (ENGLISH) (REV. 2/25/05)

	BY	CHECKED
DESIGN	C. JOHNSON	A. SU
DETAILS	R. KELCHER	A. SU
QUANTITIES	A. PRILEY	J. WONG

ORIGINAL SCALE IN INCHES FOR REDUCED PLANS 0 1 2 3

PREPARED FOR THE
STATE OF CALIFORNIA
DEPARTMENT OF TRANSPORTATION

A. PRILEY
PROJECT ENGINEER

CU 12235
EA 071631

BRIDGE NO. 55E0106
POST MILE R0.1 (Ora)

RETAINING WALL NO. 96
ARCHITECTURAL DETAILS NO. 1

DISREGARD PRINTS BEARING EARLIER REVISION DATES
REVISION DATES (PRELIMINARY STAGE ONLY) 04/06/09 07/27/09

SHEET 9 OF 15

FILE => 55-e0106-s-arch02.dgn

USERNAME => frstrk DATE PLOTTED => 04-FEB-2010 TIME PLOTTED => 10:50

DIST	COUNTY	ROUTE	POST MILES TOTAL PROJECT	SHEET No	TOTAL SHEETS
12	Ora	22, 405, 605	R0.3/R0.9, 22.3/24.0,3.0/R1.6	1904	1929

LICENSED LANDSCAPE ARCHITECT

2-1-10
PLANS APPROVAL DATE

LICENSED LANDSCAPE ARCHITECT CATHY L. JOHNSON NO. 4545 STATE OF CALIFORNIA
01-31-10 Renewal Date
07-27-09 Date

The State of California or its officers or agents shall not be responsible for the accuracy or completeness of electronic copies of this plan sheet.

OCTA
550 SOUTH MAIN STREET
ORANGE, CA 92863

RBF CONSULTING
14725 ALTON PARKWAY
IRVINE, CA 92618

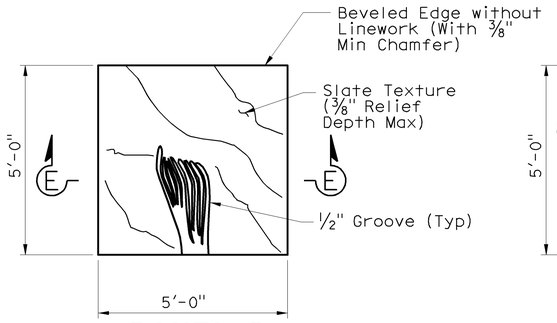

PANEL-5
1/2" = 1'-0"

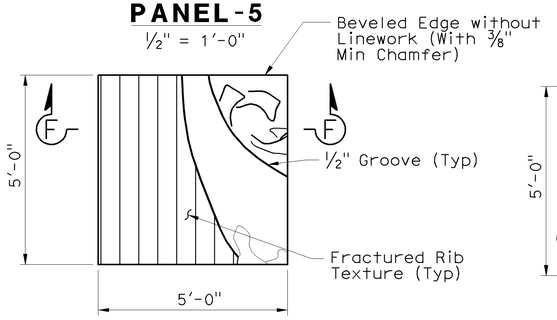

PANEL-6
1/2" = 1'-0"

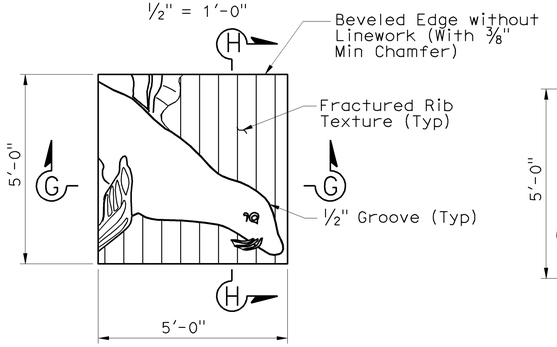

PANEL-7
1/2" = 1'-0"

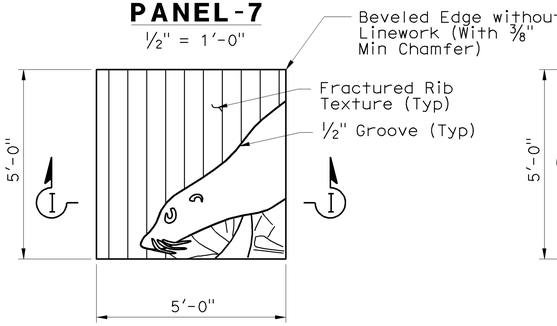

PANEL-8
1/2" = 1'-0"

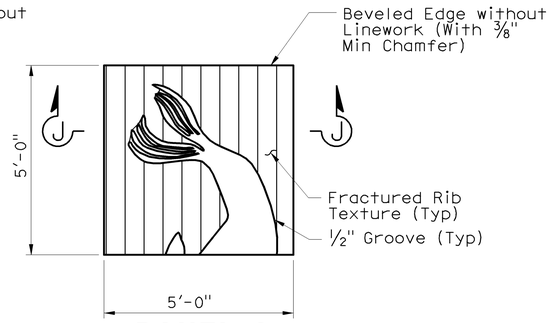

PANEL-9
1/2" = 1'-0"

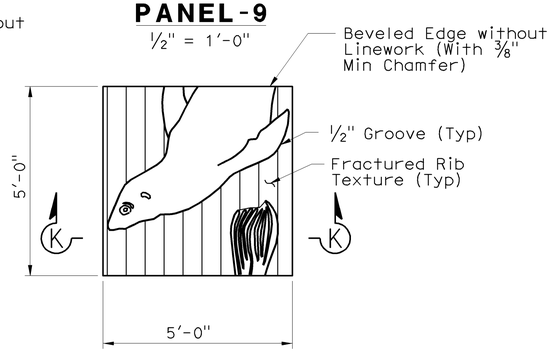

PANEL-10
1/2" = 1'-0"

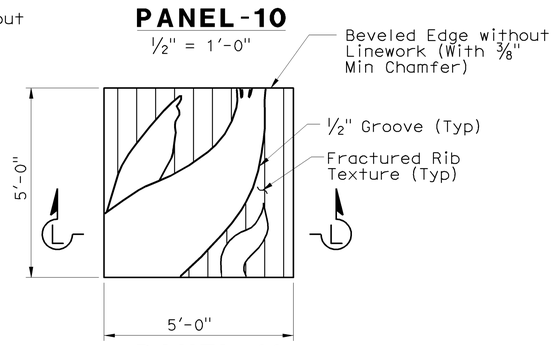

PANEL-11
1/2" = 1'-0"

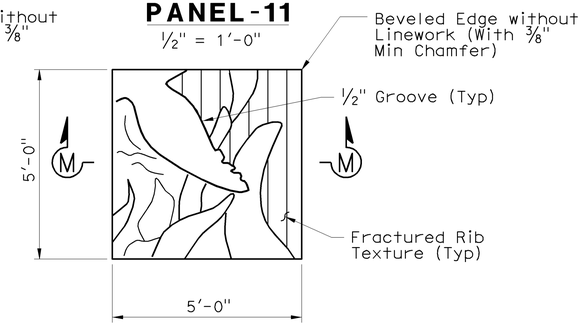

PANEL-12
1/2" = 1'-0"

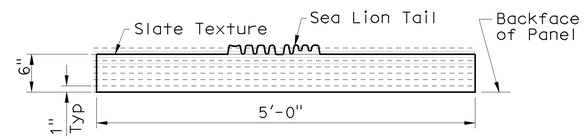

SECTION E-E
1" = 1'-0"

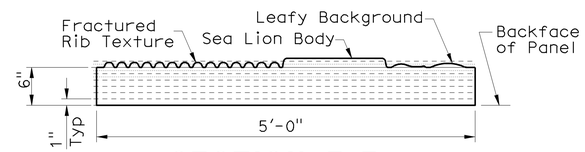

SECTION F-F
1" = 1'-0"

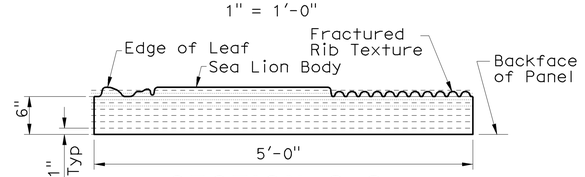

SECTION G-G
1" = 1'-0"

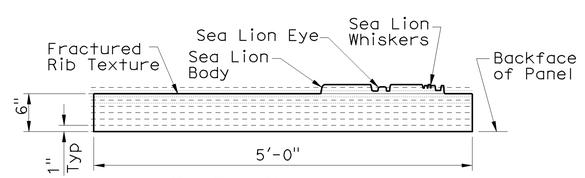

SECTION H-H
1" = 1'-0"

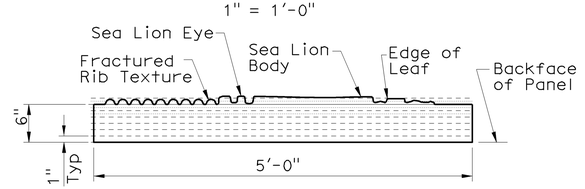

SECTION I-I
1" = 1'-0"

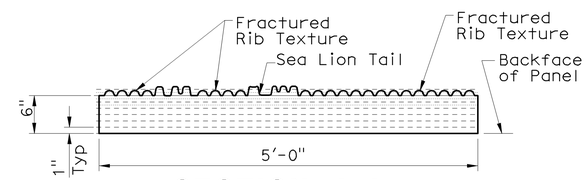

SECTION J-J
1" = 1'-0"

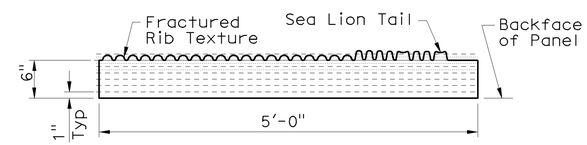

SECTION K-K
1" = 1'-0"

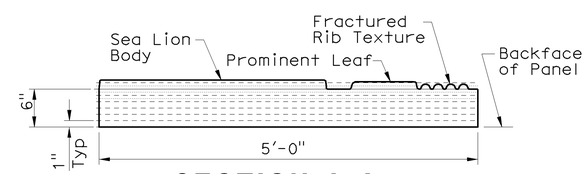

SECTION L-L
1" = 1'-0"

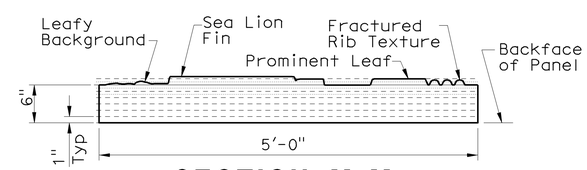

SECTION M-M
1" = 1'-0"

Sudhakar Vatti
DESIGN OVERSIGHT Sudhakar Vatti
8-10-09
SIGN OFF DATE

	BY	CHECKED
DESIGN	C. JOHNSON	A. SU
DETAILS	R. KELCHER	A. SU
QUANTITIES	A. PRILEY	J. WONG

PREPARED FOR THE STATE OF CALIFORNIA DEPARTMENT OF TRANSPORTATION

A. PRILEY
PROJECT ENGINEER

BRIDGE NO. 55E0106
POST MILE R0.1 (Ora)

RETAINING WALL NO. 96
ARCHITECTURAL DETAILS NO. 2

DESIGN DETAIL SHEET (ENGLISH) (REV. 2/25/05)

ORIGINAL SCALE IN INCHES FOR REDUCED PLANS 0 1 2 3

CU 12235
EA 071631

DISREGARD PRINTS BEARING EARLIER REVISION DATES
REVISION DATES (PRELIMINARY STAGE ONLY) 04/06/09 07/27/09

SHEET 10 OF 15

FILE => 55-e0106-s-arch03.dgn

USERNAME => frstrk DATE PLOTTED => 04-FEB-2010 TIME PLOTTED => 10:50

DIST	COUNTY	ROUTE	POST MILES TOTAL PROJECT	SHEET No	TOTAL SHEETS
12	Ora	22, 405, 605	R0.3/R0.9, 22.3/24.0,3.0/R1.6	1905	1929

LICENSED LANDSCAPE ARCHITECT

2-1-10
PLANS APPROVAL DATE

LICENSED LANDSCAPE ARCHITECT
CATHY L. JOHNSON
NO. 4545
01-31-10
Renewal Date
07-27-09
Date
STATE OF CALIFORNIA

The State of California or its officers or agents shall not be responsible for the accuracy or completeness of electronic copies of this plan sheet.

OCTA
550 SOUTH MAIN STREET
ORANGE, CA 92863

RBF CONSULTING
14725 ALTON PARKWAY
IRVINE, CA 92618

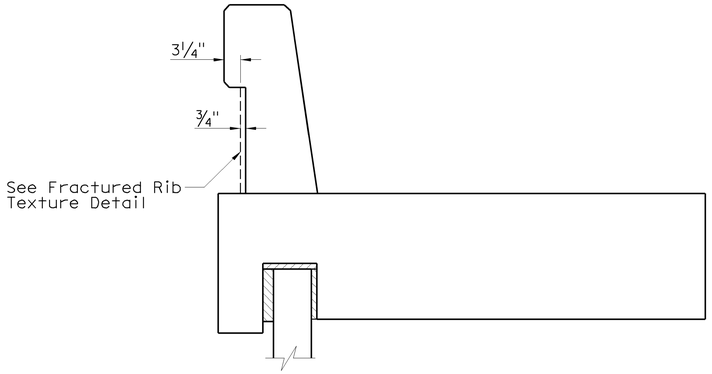

CONCRETE BARRIER (TYPE 736 MOD)

No Scale

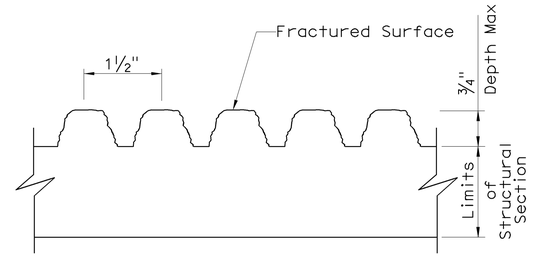

FRACTURED RIB TEXTURE

No Scale

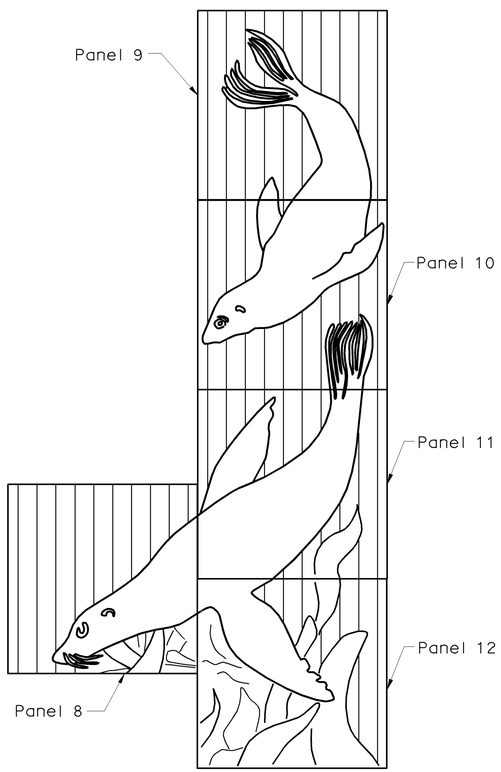

ELEVATION A

No Scale

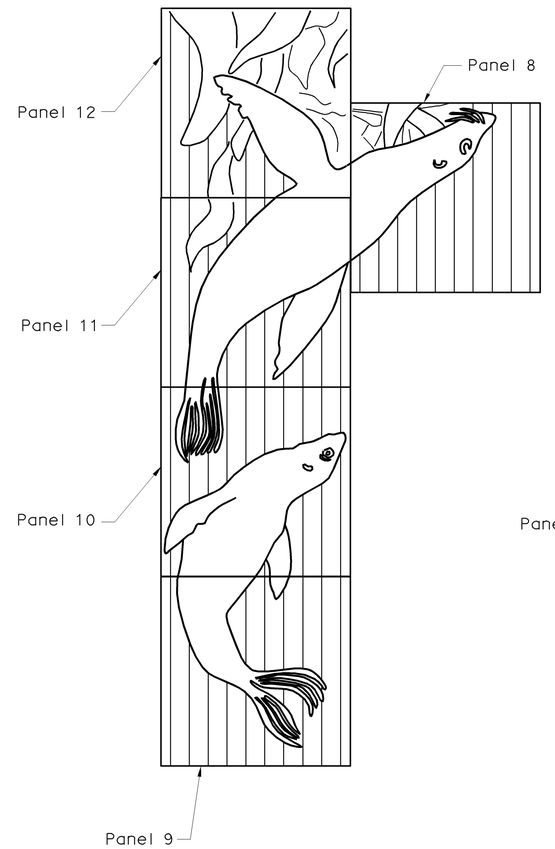

ELEVATION B

No Scale

Note: Rotate "Elevation A" 180°

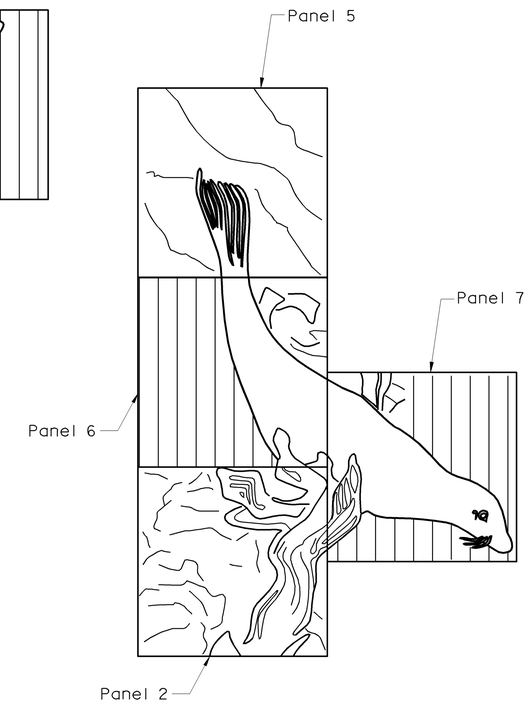

ELEVATION C

No Scale

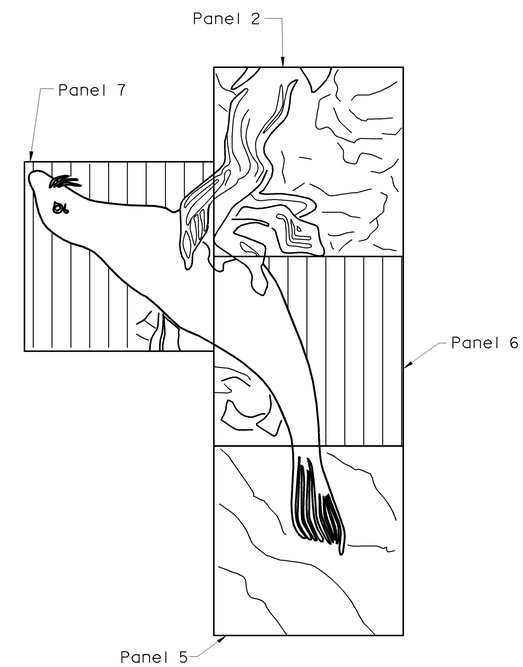

ELEVATION D

No Scale

Note: Rotate "Elevation C" 180°

Sudhakar Vatti
DESIGN OVERSIGHT Sudhakar Vatti
8-10-09
SIGN OFF DATE

	BY	CHECKED
DESIGN	C. JOHNSON	A. SU
DETAILS	R. KELCHER	A. SU
QUANTITIES	A. PRILEY	J. WONG

PREPARED FOR THE STATE OF CALIFORNIA DEPARTMENT OF TRANSPORTATION

A. PRILEY
PROJECT ENGINEER

BRIDGE NO. 55E0106
POST MILE R0.1 (Ora)

RETAINING WALL NO. 96
ARCHITECTURAL DETAILS NO. 3

DESIGN DETAIL SHEET (ENGLISH) (REV. 2/25/05)

ORIGINAL SCALE IN INCHES FOR REDUCED PLANS 0 1 2 3

CU 12235
EA 071631

DISREGARD PRINTS BEARING EARLIER REVISION DATES
REVISION DATES (PRELIMINARY STAGE ONLY) 04/06/09 07/27/09

SHEET 11 OF 15

FILE => 55-e0106-s-arch04.dgn

USERNAME => trstrk DATE PLOTTED => 04-FEB-2010 TIME PLOTTED => 10:51

REFERENCE: CALTRANS SOIL & ROCK LOGGING, CLASSIFICATION, AND PRESENTATION MANUAL (JUNE 2007)

DIST	COUNTY	ROUTE	POST MILES TOTAL PROJECT	SHEET No	TOTAL SHEETS
12	Ora	22,405, 605	R0.3/R0.9, 22.3/24.0,3.0/R1.6	1906	1929

REGISTERED CIVIL ENGINEER 07/27/09 DATE

2-1-10
PLANS APPROVAL DATE

REGISTERED PROFESSIONAL ENGINEER K.Arulmoli No. GE 2090 Exp.12-31-09 GEOTECHNICAL STATE OF CALIFORNIA

The State of California or its officers or agents shall not be responsible for the accuracy or completeness of electronic copies of this plan sheet.

OCTA
550 SOUTH MAIN STREET
ORANGE, CA 92863

EARTH MECHANICS, INC.
17660, NEWHOPE STREET, SUITE E
FOUNTAIN VALLEY, CA 92708

CEMENTATION

Description	Criteria
Weak	Crumbles or breaks with handling or little finger pressure.
Moderate	Crumbles or breaks with considerable finger pressure.
Strong	Will not crumble or break with finger pressure.

CONSISTENCY OF COHESIVE SOILS

Description	Unconfined Compressive Strength (tsf)	Pocket Penetrometer Measurement (tsf)	Torvane Measurement (tsf)	Field Approximation
Very Soft	< 0.25	< 0.25	< 0.12	Easily penetrated several inches by fist
Soft	0.25 to 0.50	0.25 to 0.50	0.12 to 0.25	Easily penetrated several inches by thumb
Medium Stiff	0.50 to 1.0	0.50 to 1.0	0.25 to 0.50	Penetrated several inches by thumb with moderate effort
Stiff	1 to 2	1 to 2	0.50 to 1.0	Readily indented by thumb but penetrated only with great effort
Very Stiff	2 to 4	2 to 4	1.0 to 2.0	Readily indented by thumbnail
Hard	> 4.0	> 4.0	> 2.0	Indented by thumbnail with difficulty

BOREHOLE IDENTIFICATION

Symbol	Hole Type	Description
Size	A	Auger Boring
Size	R P	Rotary drilled boring Rotary percussion boring (air)
Size	R	Rotary drilled diamond core
Size	HD HA	Hand driven (1-inch soil tube) Hand Auger
●	D	Dynamic Cone Penetration Boring
▲	CPT	Cone Penetration Test (ASTM D 5778-95)
□	O	Other

Note: Size in inches.

PLASTICITY OF FINE-GRAINED SOILS

Description	Criteria
Nonplastic	A 1/8-inch thread cannot be rolled at any water content.
Low	The thread can barely be rolled and the lump cannot be formed when drier than the plastic limit.
Medium	The thread is easy to roll and not much time is required to reach the plastic limit. The thread cannot be rerolled after reaching the plastic limit. The lump crumbles when drier than the plastic limit.
High	It takes considerable time rolling and kneading to reach the plastic limit. The thread can be rerolled several times after reaching the plastic limit. The lump can be formed without crumbling when drier than the plastic limit.

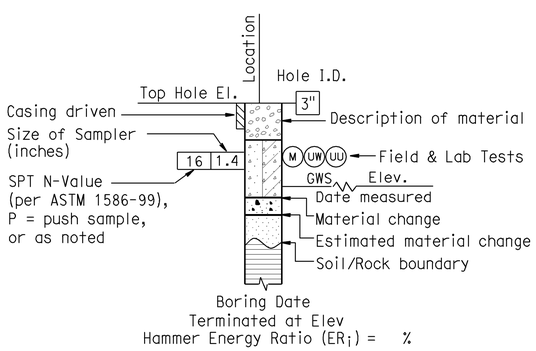

ROTARY BORING

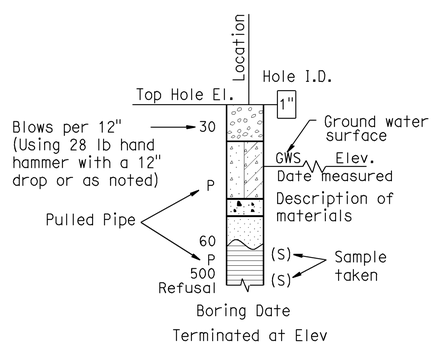

HAND BORING

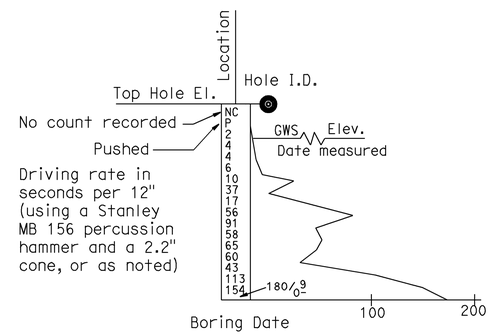

DYNAMIC CONE PENETRATION BORING

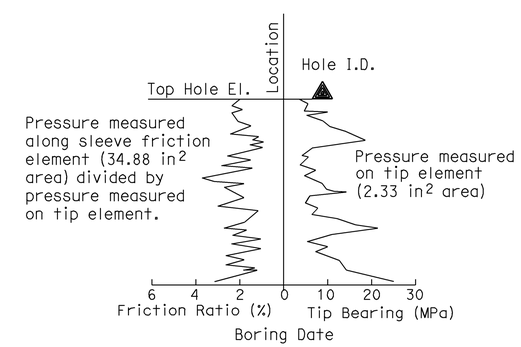

CONE PENETRATION TEST (CPT) SOUNDING

Sudhakar Vatti
DESIGN OVERSIGHT Sudhakar Vatti

8-10-09
SIGN OFF DATE

DRAWN BY: K.Pratheepan
CHECKED BY: G.J.Gunaranjan

FIELD INVESTIGATION BY:
R.Jie

PREPARED FOR THE STATE OF CALIFORNIA DEPARTMENT OF TRANSPORTATION

K.Arulmoli
PROJECT ENGINEER

BRIDGE NO. 55E0106
POST MILE R0.1(Ora)

RETAINING WALL NO 96
LOG OF TEST BORINGS NO. 1

OSF CIVIL LOG OF TEST BORINGS SHEET (ENGLISH) (REV. 2-25-05)

ORIGINAL SCALE IN INCHES FOR REDUCED PLANS 0 1 2 3

CU 12235
EA 071631

DISREGARD PRINTS BEARING EARLIER REVISION DATES

REVISION DATES (PRELIMINARY STAGE ONLY) 03/23/09 04/06/09 07/27/09

SHEET 12 OF 15

FILE => 55-e0106-z-ltb01.dgn

USERNAME => ttmnguye DATE PLOTTED => 04-FEB-2010 TIME PLOTTED => 11:22

REFERENCE: CALTRANS SOIL & ROCK LOGGING, CLASSIFICATION, AND PRESENTATION MANUAL (JUNE 2007)

GROUP SYMBOLS AND NAMES

Graphic/Symbol	Group Names
GW	Well-graded GRAVEL Well-graded GRAVEL with SAND
GP	Poorly graded GRAVEL Poorly graded GRAVEL with SAND
GW-GM	Well-graded GRAVEL with SILT Well-graded GRAVEL with SILT and SAND
GW-GC	Well-graded GRAVEL with CLAY (or SILTY CLAY) Well-graded GRAVEL with CLAY and SAND (or SILTY CLAY and SAND)
GP-GM	Poorly graded GRAVEL with SILT Poorly graded GRAVEL with SILT and SAND
GP-GC	Poorly graded GRAVEL with CLAY (or SILTY CLAY) Poorly graded GRAVEL with CLAY and SAND (or SILTY CLAY and SAND)
GM	SILTY GRAVEL SILTY GRAVEL with SAND
GC	CLAYEY GRAVEL CLAYEY GRAVEL with SAND
GC-GM	SILTY, CLAYEY GRAVEL SILTY, CLAYEY GRAVEL with SAND
SW	Well-graded SAND Well-graded SAND with GRAVEL
SP	Poorly graded SAND Poorly graded SAND with GRAVEL
SW-SM	Well-graded SAND with SILT Well-graded SAND with SILT and GRAVEL
SW-SC	Well-graded SAND with CLAY (or SILTY CLAY) Well-graded SAND with CLAY and GRAVEL (or SILTY CLAY and GRAVEL)
SP-SM	Poorly graded SAND with SILT Poorly graded SAND with SILT and GRAVEL
SP-SC	Poorly graded SAND with CLAY (or SILTY CLAY) Poorly graded SAND with CLAY and GRAVEL (or SILTY CLAY and GRAVEL)
SM	SILTY SAND SILTY SAND with GRAVEL
SC	CLAYEY SAND CLAYEY SAND with GRAVEL
SC-SM	SILTY, CLAYEY SAND SILTY, CLAYEY SAND with GRAVEL
PT	PEAT
	COBBLES COBBLES and BOULDERS BOULDERS

Graphic/Symbol	Group Names
CL	Lean CLAY Lean CLAY with SAND Lean CLAY with GRAVEL SANDY lean CLAY SANDY lean CLAY with GRAVEL GRAVELLY lean CLAY GRAVELLY lean CLAY with SAND
CL-ML	SILTY CLAY SILTY CLAY with SAND SILTY CLAY with GRAVEL SANDY SILTY CLAY SANDY SILTY CLAY with GRAVEL GRAVELLY SILTY CLAY GRAVELLY SILTY CLAY with SAND
ML	SILT SILT with SAND SILT with GRAVEL SANDY SILT SANDY SILT with GRAVEL GRAVELLY SILT GRAVELLY SILT with SAND
OL	ORGANIC lean CLAY ORGANIC lean CLAY with SAND ORGANIC lean CLAY with GRAVEL SANDY ORGANIC lean CLAY SANDY ORGANIC lean CLAY with GRAVEL GRAVELLY ORGANIC lean CLAY GRAVELLY ORGANIC lean CLAY with SAND
OL	ORGANIC SILT ORGANIC SILT with SAND ORGANIC SILT with GRAVEL SANDY ORGANIC SILT SANDY ORGANIC SILT with GRAVEL GRAVELLY ORGANIC SILT GRAVELLY ORGANIC SILT with SAND
CH	Fat CLAY Fat CLAY with SAND Fat CLAY with GRAVEL SANDY fat CLAY SANDY fat CLAY with GRAVEL GRAVELLY fat CLAY GRAVELLY fat CLAY with SAND
MH	Elastic SILT Elastic SILT with SAND Elastic SILT with GRAVEL SANDY elastic SILT SANDY elastic SILT with GRAVEL GRAVELLY elastic SILT GRAVELLY elastic SILT with SAND
OH	ORGANIC fat CLAY ORGANIC fat CLAY with SAND ORGANIC fat CLAY with GRAVEL SANDY ORGANIC fat CLAY SANDY ORGANIC fat CLAY with GRAVEL GRAVELLY ORGANIC fat CLAY GRAVELLY ORGANIC fat CLAY with SAND
OH	ORGANIC elastic SILT ORGANIC elastic SILT with SAND ORGANIC elastic SILT with GRAVEL SANDY ORGANIC elastic SILT SANDY ORGANIC elastic SILT with GRAVEL GRAVELLY ORGANIC elastic SILT GRAVELLY ORGANIC elastic SILT with SAND
OL/OH	ORGANIC SOIL ORGANIC SOIL with SAND ORGANIC SOIL with GRAVEL SANDY ORGANIC SOIL SANDY ORGANIC SOIL with GRAVEL GRAVELLY ORGANIC SOIL GRAVELLY ORGANIC SOIL with SAND

FIELD AND LABORATORY TESTING

- (C) Consolidation (ASTM D 2435)
- (CL) Collapse Potential (ASTM D 5333)
- (CP) Compaction Curve (CTM 216)
- (CR) Corrosivity Testing (CTM 643, CTM 422, CTM 417)
- (CU) Consolidated Undrained Triaxial (ASTM D 4767)
- (DS) Direct Shear (ASTM D 3080)
- (EI) Expansion Index (ASTM D 4829)
- (M) Moisture Content (ASTM D 2216)
- (OC) Organic Content-% (ASTM D 2974)
- (P) Permeability (CTM 220)
- (PA) Particle Size Analysis (ASTM D 422)
- (PI) Plasticity Index (AASHTO T 90) Liquid Limit (AASHTO T 89)
- (PL) Point Load Index (ASTM D 5731)
- (PM) Pressure Meter
- (PP) Pocket Penetrometer
- (R) R-Value (CTM 301)
- (SE) Sand Equivalent (CTM 217)
- (SG) Specific Gravity (AASHTO T 100)
- (SL) Shrinkage Limit (ASTM D 427)
- (SW) Swell Potential (ASTM D 4546)
- (TV) Pocket Torvane
- (UC) Unconfined Compression-Soil (ASTM D 2166) Unconfined Compression-Rock (ASTM D 2938)
- (UU) Unconsolidated Undrained Triaxial (ASTM D 2850)
- (UW) Unit Weight (ASTM D 4767)
- (VS) Vane Shear (AASHTO T 223)

DIST	COUNTY	ROUTE	POST MILES TOTAL PROJECT	SHEET No	TOTAL SHEETS
12	Ora	22,405, 605	R0.3/R0.9, 22.3/24.0,3.0/R1.6	1907	1929

REGISTERED CIVIL ENGINEER 07/27/09 DATE

2-1-10
PLANS APPROVAL DATE

REGISTERED PROFESSIONAL ENGINEER K.Arulmoli No. GE 2090 Exp.12-31-09 GEOTECHNICAL STATE OF CALIFORNIA

The State of California or its officers or agents shall not be responsible for the accuracy or completeness of electronic copies of this plan sheet.

OCTA
550 SOUTH MAIN STREET
ORANGE, CA 92863

EARTH MECHANICS, INC.
17660, NEWHOPE STREET, SUITE E
FOUNTAIN VALLEY, CA 92708

APPARENT DENSITY OF COHESIONLESS SOILS

Description	SPT N_{60} (Blows / 12 inches)
Very loose	0 - 4
Loose	5 - 10
Medium Dense	11 - 30
Dense	31 - 50
Very Dense	> 50

MOISTURE

Description	Criteria
Dry	Absence of moisture, dusty, dry to the touch
Moist	Damp but no visible water
Wet	Visible free water, usually soil is below water table

PERCENT OR PROPORTION OF SOILS

Description	Criteria
Trace	Particles are present but estimated to be less than 5%
Few	5 to 10%
Little	15 to 25%
Some	30 to 45%
Mostly	50 to 100%

PARTICLE SIZE

Description		Size
Boulder		> 12"
Cobble		3" to 12"
Gravel	Coarse	3/4" to 3"
	Fine	No. 4 to 3/4"
Sand	Coarse	No. 10 to No. 4
	Medium	No. 40 to No. 10
	Fine	No. 200 to No. 40

Sudhakar Vatti
DESIGN OVERSIGHT Sudhakar Vatti

8-10-09
SIGN OFF DATE

DRAWN BY: K.Pratheepan
CHECKED BY: G.J.Gunaranjan

FIELD INVESTIGATION BY:
R.Jie

PREPARED FOR THE STATE OF CALIFORNIA DEPARTMENT OF TRANSPORTATION

K.Arulmoli
PROJECT ENGINEER

BRIDGE NO. 55E0106
POST MILE R0.1(Ora)

RETAINING WALL NO 96
LOG OF TEST BORINGS NO. 2

OSF CIVIL LOG OF TEST BORINGS SHEET (ENGLISH) (REV. 2-25-05)

ORIGINAL SCALE IN INCHES FOR REDUCED PLANS 0 1 2 3

CU 12235
EA 071631

DISREGARD PRINTS BEARING EARLIER REVISION DATES

REVISION DATES (PRELIMINARY STAGE ONLY) 03/25/09 04/06/09 07/27/09

SHEET 13 OF 15

FILE => 55-e0106-z-ltb02.dgn

USERNAME => trimmguye DATE PLOTTED => 04-FEB-2010 TIME PLOTTED => 11:22

DIST	COUNTY	ROUTE	POST MILES TOTAL PROJECT	SHEET No	TOTAL SHEETS
12	Ora	22,405, 605	R0.3/R0.9, 22.3/24.0,3.0/R1.6	1908	1929

REGISTERED CIVIL ENGINEER 07/27/09 DATE

2-1-10
PLANS APPROVAL DATE

REGISTERED PROFESSIONAL ENGINEER K.Arulmoli No. GE 2090 Exp.12-31-09 GEOTECHNICAL STATE OF CALIFORNIA

The State of California or its officers or agents shall not be responsible for the accuracy or completeness of electronic copies of this plan sheet.

OCTA
550 SOUTH MAIN STREET
ORANGE, CA 92863

EARTH MECHANICS, INC.
17660, NEWHOPE STREET, SUITE E
FOUNTAIN VALLEY, CA 92708

BENCHMARKS:

Monument: 1A-144-04

Described by OCS 2005 - Found 3.75" OCS aluminum benchmark disk stamped "1A-144-04", set in the southwesterly corner of a 4.4 ft by 4.4 ft concrete catch basin. Monument is located in the northeasterly corner of the intersection of Seal Beach Boulevard and St. Cloud Drive, 44 ft easterly of the centerline of Seal Beach Boulevard and 58 ft northerly of the centerline of St. Cloud Dr. Monument is set level with the sidewalk.

Elevation: 15.37 feet

NOTES:

(1) This LOTB sheet (Boring Record) was prepared in accordance with the Caltrans Soil and Rock Classification Logging, Classification and Presentation Manual (June 2007).

(2) 2.4" samples were taken using a California Modified Sampler.

(3) A rope and cat-head hammer system consisting of a hammer weight of 140 lbs falling a distance of 30" was used to advance the drive sampler.

(4) An automatic trip hammer system consisting of a hammer weight of 140 lbs falling a distance of 30" was used to advance the drive sampler.

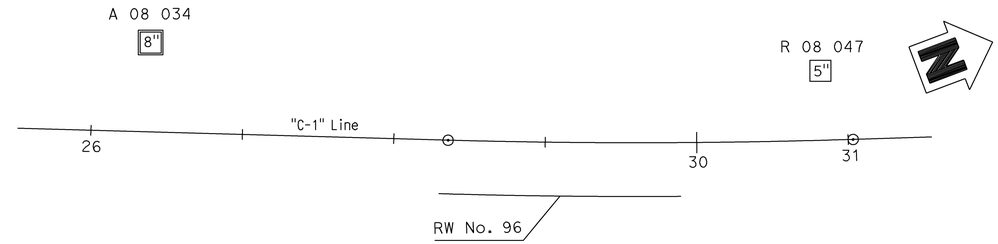

PLAN

1" = 50'

PROFILE

VERTICAL 1" = 10'
HORIZONTAL 1" = 40'

Sudhakar Vatti
DESIGN OVERSIGHT Sudhakar Vatti
8-10-09
SIGN OFF DATE

DRAWN BY: K.Pratheepan
CHECKED BY: G.J.Gunaranjan

FIELD INVESTIGATION BY:
R.Jie

PREPARED FOR THE STATE OF CALIFORNIA DEPARTMENT OF TRANSPORTATION

K.Arulmoli
PROJECT ENGINEER

BRIDGE NO. 55E0106
POST MILE R0.1(Ora)

RETAINING WALL NO 96

LOG OF TEST BORINGS NO. 3

OSF CIVIL LOG OF TEST BORINGS SHEET (ENGLISH) (REV. 2-25-05)

ORIGINAL SCALE IN INCHES FOR REDUCED PLANS 0 1 2 3

CU 12235
EA 071631

DISREGARD PRINTS BEARING EARLIER REVISION DATES

REVISION DATES (PRELIMINARY STAGE ONLY) 03/23/09 04/06/09 07/27/09

SHEET 14 OF 15

FILE => 55-e0106-z-ltb03.dgn

USERNAME => trmnguye DATE PLOTTED => 04-FEB-2010 TIME PLOTTED => 11:22

FED ROAD DIV NO	STATE	PROJ NO	FISCAL YEAR	SHEET NO	TOTAL SHEETS
7	CAL.				

DIST	COUNTY	ROUTE	SECTION	SHEET NO.	TOTAL SHEETS
VII	ORA	170	A	217	758

(11-0) [signature]
DESIGN ENGINEER — CIVIL ENGINEER LICENSE NUMBER

DATE APPROVED April 10, 1964

BM # 189-A-62 Elev. 12.58

Fd chis. square in PCC. end for fence post, 750 ft. northerly along block wall prod. from BM 483-A-62 & southerly of EW. CHL. fence on southerly side of Kempton storm drain channel, 65 ft. westerly of intersection block wall and chain link fence.

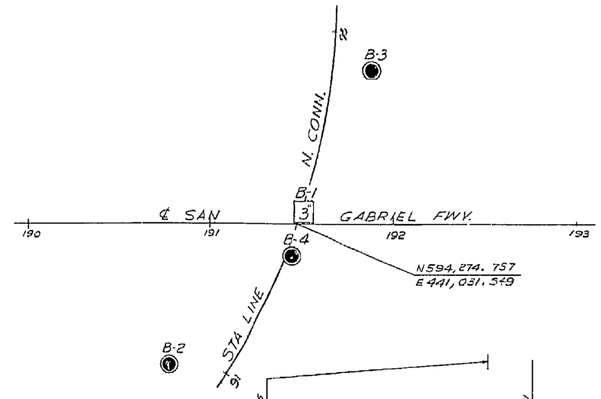

PLAN
Scale: 1"=40'

DIVISION OF ENGINEERING SERVICES - GEOTECHNICAL SERVICES					
As-Built Log of Test Borings sheet is considered an informational document only. As such, the State of California registration seal with signature, license number and registration certificate expiration date confirm that this is a true and accurate copy of the original document. This drawing is available and presented only for the convenience of any bidder, contractor or other interested party.					
DIST.	COUNTY	ROUTE	KILOMETER POST-TOTAL PROJECT	Sheet No.	Total Sheets
12	Ora	22,405, 605	R0.3/R0.9,22.3/24.0,3.0/R1.6	1909	1929
REGISTERED CIVIL ENGINEER			07/27/09 DATE		

LOG OF TEST BORINGS NO. 4

NOTE: A COPY OF THIS LOG OF TEST BORINGS IS AVAILABLE AT OFFICE OF STRUCTURE MAINTENANCE AND INVESTIGATIONS, SACRAMENTO, CALIFORNIA	CU: 12235 EA: 071631	BRIDGE No. 55E0106	
		Sheet 15	of 15

Revisions made to this Log of Test Borings from the original 1966 Log of Test Borings are the addition of the following table and notes:

To accompany plans dated 2-1-10

REGISTERED PROFESSIONAL ENGINEER
K. Aruimoli
No. GE 2090
Exp. 12-31-09
GEOTECHNICAL
STATE OF CALIFORNIA

Boring	Station	Offset from "C-1" Line

BRIDGE DEPARTMENT

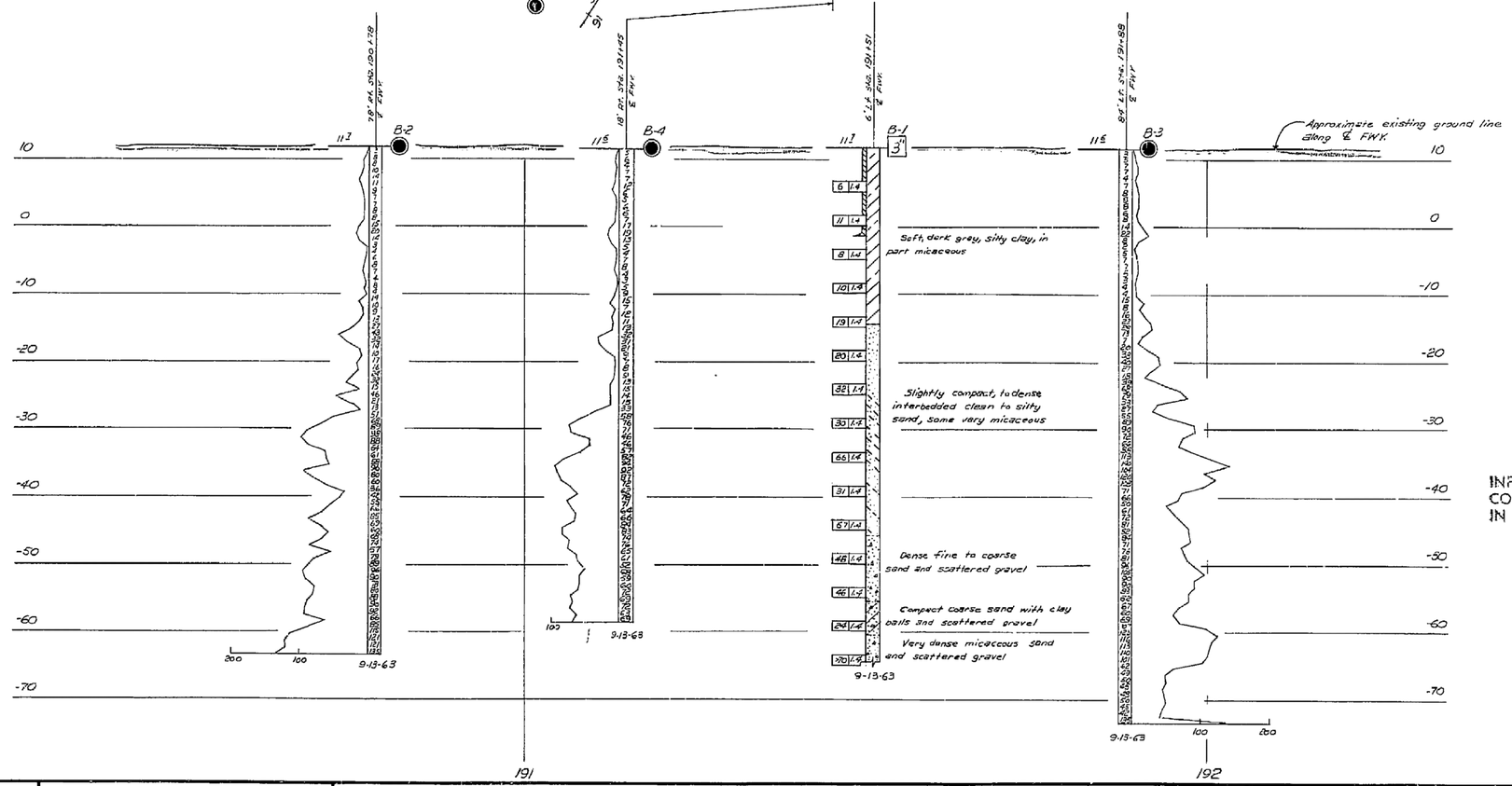

PROFILE
Scale: 1"=10'

INFORMATION ON ACTUAL FOUNDATION CONDITIONS ENCOUNTERED IS ON FILE IN BRIDGE GEOLOGY SECTION

NO GROUND WATER

AS BUILT PLANS
Contract No. 07-033914
Date Completed
Document No. 7000189

FIELD STUDY	R. J.B. Jones	9-13-63
DRAWN	R. V.L. Ryan	9-23-63
CHECKED	R. K. Fleming	10-3-63

Approval Recommended: [signature] Engineering Geologist
Approved: [signature] Engineer

6 of 6

CLASSIFICATION OF MATERIAL BASED ON STANDARD GRADE SIZE LIMITS

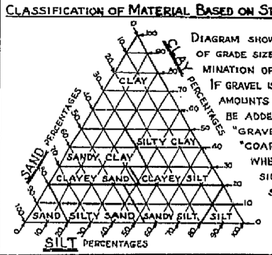

DIAGRAM SHOWING THE BASIS FOR ESTIMATES OF GRADE SIZE DISTRIBUTION USED IN DETERMINATION OF CLASS NAMES. IF GRAVEL IS PRESENT IN APPRECIABLE AMOUNTS THE TERM "GRAVELLY" MAY BE ADDED TO THE CLASS NAME, VIZ. "GRAVELLY SAND." THE TERMS "COARSE", "MEDIUM" AND "FINE" WHEN USED TO DESCRIBE SAND, SILT AND GRAVEL REFER TO STANDARD GRADE SIZE LIMITS.

LEGEND OF EARTH MATERIALS

- GRAVEL
- SAND
- SILT
- CLAY
- SANDY CLAY OR CLAYEY SAND
- SANDY SILT OR SILTY SAND
- SILTY CLAY OR CLAYEY SILT
- PEAT AND/OR ORGANIC MATTER
- FILL MATERIAL
- IGNEOUS ROCK
- SEDIMENTARY ROCK
- METAMORPHIC ROCK

LEGEND OF BORING OPERATIONS

- PENETROMETER
- 2¼" CONE PENETROMETER
- SAMPLER BORING (DRY)
- ROTARY BORING (WET)
- AUGER BORING (DRY)
- JET BORING
- CORE BORING
- TEST PIT

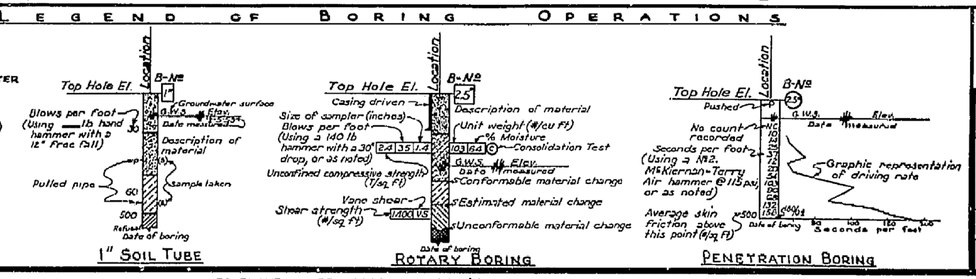

NOTE

Classification of earth material as shown on this sheet is based upon field inspection and is not to be construed to imply mechanical analysis.

STATE OF CALIFORNIA
DEPARTMENT OF PUBLIC WORKS
DIVISION OF HIGHWAYS

NORTH CONNECTOR UNDERCROSSING

LOG OF TEST BORINGS

SCALE As Noted	BRIDGE 55-415	FILE	DRAWING 55415-6

PREL. DRAWING NO. P-

217

FILENAME => 55-e0106-z-ltb04.tif

DIST	COUNTY	ROUTE	POST MILES TOTAL PROJECT	SHEET No	TOTAL SHEETS
12	Ora	22, 405, 605	R0.3/R0.9, 22.3/24.0,3.0/R1.6	1910	1929

REGISTERED CIVIL ENGINEER — DATE 07-27-09

2-1-10
PLANS APPROVAL DATE

REGISTERED PROFESSIONAL ENGINEER — MICHAEL A. WISE — No. C70400 — Exp. 9-30-10 — CIVIL — STATE OF CALIFORNIA

The State of California or its officers or agents shall not be responsible for the accuracy or completeness of scanned copies of this plan sheet.

ORANGE COUNTY TRANSPORTATION AUTHORITY
550 S. MAIN STREET
ORANGE, CA 92863-1584

AECOM USA, Inc.
999 TOWN & COUNTRY RD, ORANGE, CA 92868
T 714-567-2501 F 714-567-2441

GENERAL NOTES:

LOAD FACTOR DESIGN

Specifications:
Design:
CALTRANS Bridge Design Specification April 2000 (LFD)
(1996 AASHTO Specifications with revisions by Caltrans)
Load Factors: 1.5 D + 1.5 E + 2.5 (L + I)
Where D = Dead Load
E = Earth Load
L = Live Load
I = Impact
Capacity reduction factor is included.
Loading:
Live load:
HS20-44 truck - Apply Impact only to the roof slab.

Earth Cover	Impact (%)
Up to 1'	30
1.1' to 2'	20
2.1' to 3'	10
Over 3'	0

No surcharge on walls due to live loads.
Earth load:
Earth pressure for two conditions:
140 LB/CF vertical, 35 LB/CF horizontal.
140 LB/CF vertical, 100 LB/CF horizontal.
Unit stresses:
f'c = 3600 psi
fy = 60,000 psi

Distribution "d" bars:
Up to and including 10'-0" cover
Expressed as a percent of main positive reinforcement required: $\frac{100}{\sqrt{S}}$, max 50%.
Over 10'-0" cover
#4 @ 18 maximum

Shear
Maximum allowable shear, $v_c = 3.0\sqrt{fc}$, psi
Exclusion :
Compressive reinforcement and negative-moment reduction (for continuity) do not apply.
Axial loading on members has not been considered.

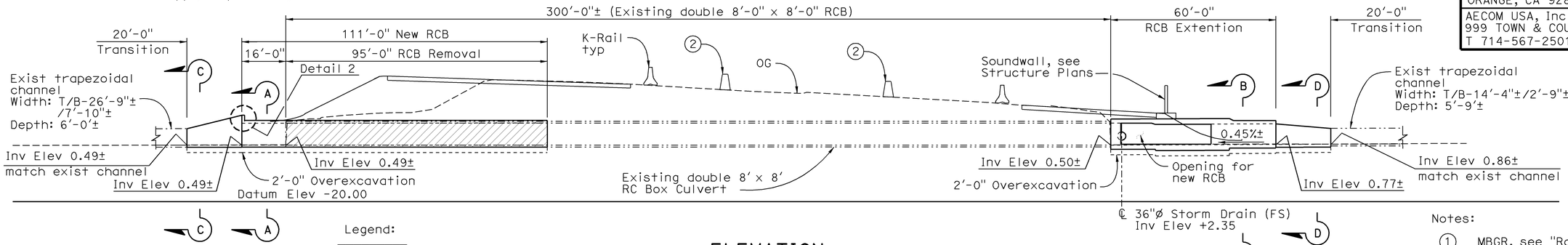

Legend:
Limits of Bridge Removal Portion (Location 10)

ELEVATION
1" = 20'-0"

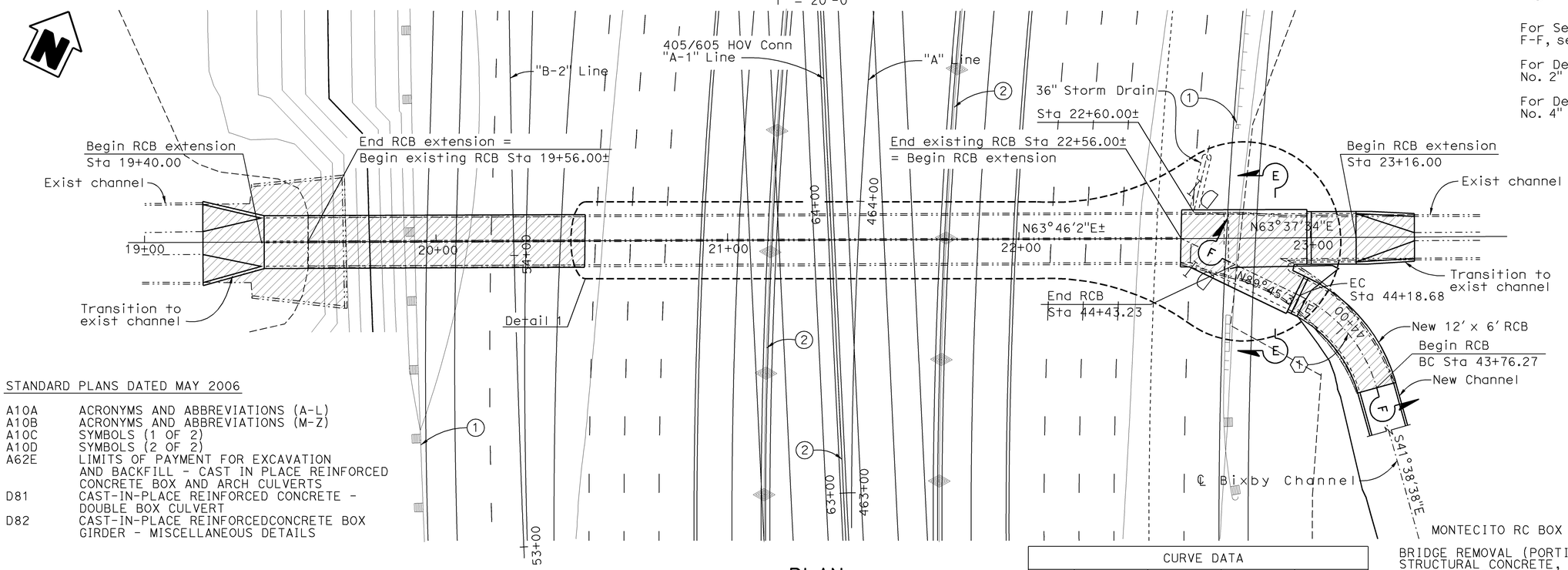

PLAN
1" = 20'-0"

Notes:
1. MBGR, see "Road Plans"
2. Concrete Barrier Type 60, see "Road Plans"

For Sections A-A, B-B, C-C, D-D, E-E and F-F, see "Sections and Details No. 1" sheet.

For Detail 1, see "Sections and Details No. 2" sheet.

For Detail 2, see "Sections and Details No. 4" sheet.

INDEX TO PLAN

1 GENERAL PLAN
2 SECTIONS AND DETAILS NO. 1
3 SECTIONS AND DETAILS NO. 2
4 SECTIONS AND DETAILS NO. 3
5 SECTIONS AND DETAILS NO. 4
6 SECTIONS AND DETAILS NO. 5
7 LOG OF TEST BORINGS NO. 1
8 LOG OF TEST BORINGS NO. 2
9 LOG OF TEST BORINGS NO. 3
10 LOG OF TEST BORINGS NO. 4

STANDARD PLANS DATED MAY 2006

A10A	ACRONYMS AND ABBREVIATIONS (A-L)
A10B	ACRONYMS AND ABBREVIATIONS (M-Z)
A10C	SYMBOLS (1 OF 2)
A10D	SYMBOLS (2 OF 2)
A62E	LIMITS OF PAYMENT FOR EXCAVATION AND BACKFILL - CAST IN PLACE REINFORCED CONCRETE BOX AND ARCH CULVERTS
D81	CAST-IN-PLACE REINFORCED CONCRETE - DOUBLE BOX CULVERT
D82	CAST-IN-PLACE REINFORCEDCONCRETE BOX GIRDER - MISCELLANEOUS DETAILS

CURVE DATA				
CURVE	R	△	L	T
1	50.00'	48°35'51"	42.41'	22.58'

MONTECITO RC BOX CULVERT EXTENSION
QUANTITIES

	LUMP SUM	
BRIDGE REMOVAL (PORTION), LOCATION 10		
STRUCTURAL CONCRETE, BOX CULVERT	608	CY
DRILL AND BOND DOWEL	10	LF
DRILL AND BOND DOWEL (CHEMICAL ADHESIVE)	34	EA
BAR REINFORCING STEEL (BOX CULVERT)	113,000	LB

Note:
Contractor shall verify all controlling field dimensions before ordering or fabricating any materials

Sudhakar Vatti — DESIGN OVERSIGHT — Sudhakar Vatti	DESIGN	BY M. Wise	CHECKED K. Krishnan	LOAD & RESISTANCE FACTOR DESIGN	LIVE LOADING: HL93 W/"LOW-BOY"; PERMIT DESIGN VEHICLE
8-10-09 SIGN OFF DATE	DETAILS	BY E. Landas	CHECKED M. Wise	LAYOUT BY E. Landas	CHECKED M. Wise
	QUANTITIES	BY D. He	CHECKED T. Jodoin	SPECIFICATIONS BY E. L. Tyk	PLANS AND SPECS COMPARED K. Michalski

PREPARED FOR THE STATE OF CALIFORNIA DEPARTMENT OF TRANSPORTATION

Kosalram Krishnan
PROJECT ENGINEER

BRIDGE NO. -
POST MILES 23.6

MONTECITO RC BOX CULVERT EXTENSION
GENERAL PLAN

DESIGN GENERAL PLAN SHEET (ENGLISH) (REV. 06-01-09)

ORIGINAL SCALE IN INCHES FOR REDUCED PLANS 0 1 2 3

CU 12235
EA 071631

DISREGARD PRINTS BEARING EARLIER REVISION DATES

REVISION DATES (PRELIMINARY STAGE ONLY) 04-09-09 07-21-09

SHEET 1 OF 10

FILE => mrcb-a-rcbgp01.dgn

USERNAME => trmnguye DATE PLOTTED => 04-FEB-2010 TIME PLOTTED => 11:22

DIST	COUNTY	ROUTE	POST MILES TOTAL PROJECT	SHEET No	TOTAL SHEETS
12	Ora	22, 405, 605	R0.3/R0.9, 22.3/24.0,3.0/R1.6	1911	1929

REGISTERED CIVIL ENGINEER 07-27-09 DATE

2-1-10
PLANS APPROVAL DATE

REGISTERED PROFESSIONAL ENGINEER MICHAEL A. WISE No. C70400 Exp. 9-30-10 CIVIL STATE OF CALIFORNIA

The State of California or its officers or agents shall not be responsible for the accuracy or completeness of scanned copies of this plan sheet.

ORANGE COUNTY TRANSPORTATION AUTHORITY
550 S. MAIN STREET
ORANGE, CA 92863-1584

AECOM USA, Inc.
999 TOWN & COUNTRY RD, ORANGE, CA 92868
T 714-567-2501 F 714-567-2441

Notes:

1. For Weephole Details, see "Montecito RC Box Culvert Sections and Details No. 5" sheet.
2. At locations adjoining new existing drainage structure flow surfaces shall be molded to create a smooth transition.
3. At locations adjoining new and existing drainage structures, bordering existing concrete surfaces shall be intentionally roughened.
4. Reinforcing and dimensions to follow Standard Plan D81 except as shown.
5. Where soil cover is less than 10'-0", provide distribution reinforcement in accordance with Standard Plan D81.
6. Provide expansion joints in accordance with Standard Plan D82.

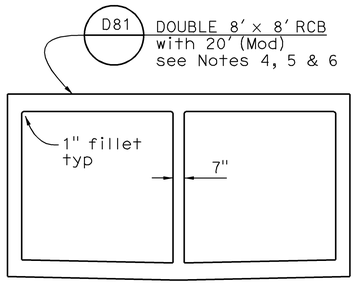

SECTION A-A
1/4" = 1'-0"

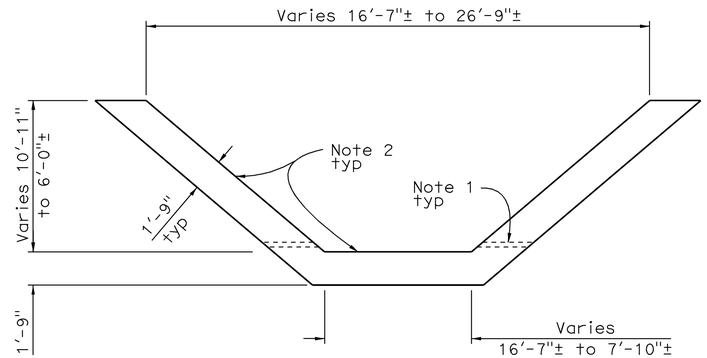

SECTION C-C
1/4" = 1'-0"

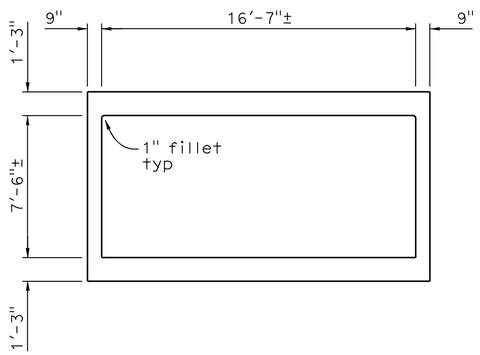

SECTION B-B
1/4" = 1'-0"

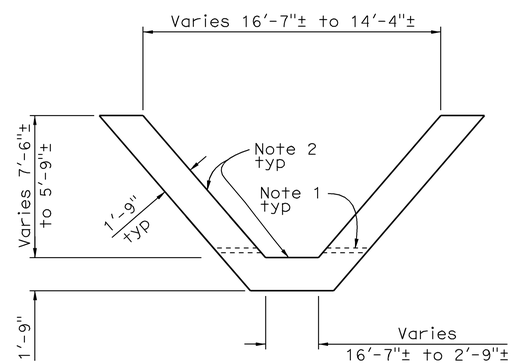

SECTION D-D
1/4" = 1'-0"

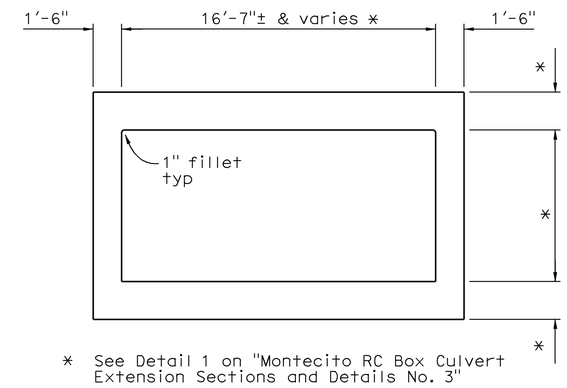

* See Detail 1 on "Montecito RC Box Culvert Extension Sections and Details No. 3"

SECTION E-E
1/4" = 1'-0"

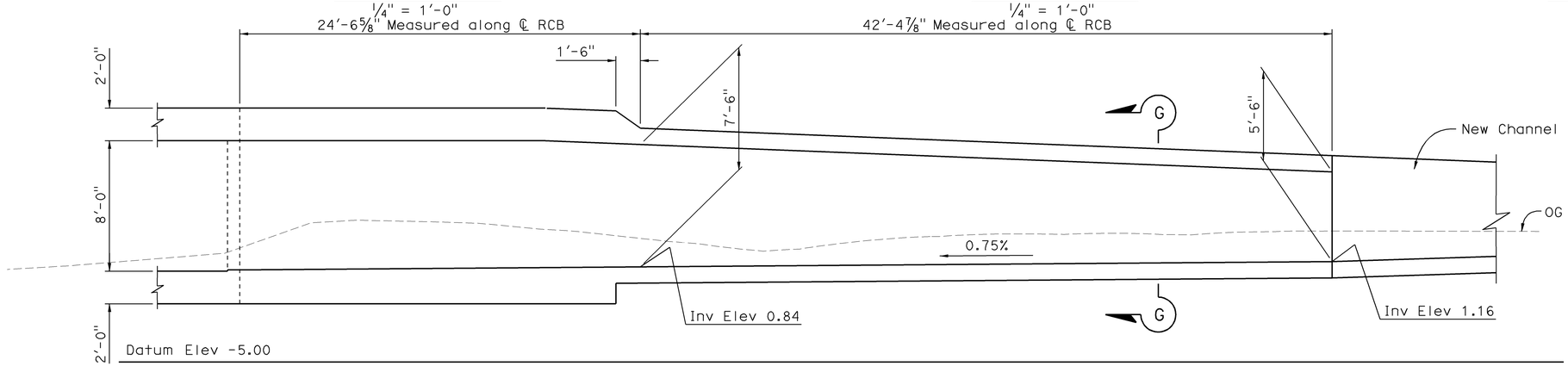

SECTION F-F (DEVELOPED)
1/4" = 1'-0"

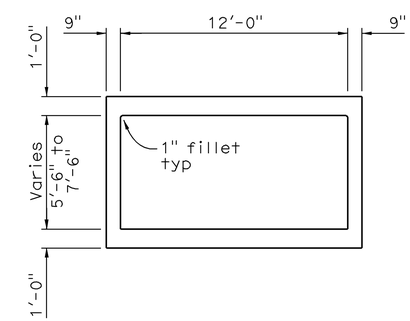

SECTION G-G
1/4" = 1'-0"

Sudhakar Vatti
DESIGN OVERSIGHT Sudhakar Vatti
8-10-09
SIGN OFF DATE

	BY	CHECKED
DESIGN	D. He	M. Wise
DETAILS	E. Landas	M. Wise
QUANTITIES	D. He	T. Jodoin

PREPARED FOR THE STATE OF CALIFORNIA DEPARTMENT OF TRANSPORTATION

Kosalram Krishnan
PROJECT ENGINEER

BRIDGE NO. –
POST MILE 23.6

MONTECITO RC BOX CULVERT EXTENSION
SECTIONS AND DETAILS NO. 1

DESIGN DETAIL SHEET (ENGLISH) (REV. 06-01-09)

ORIGINAL SCALE IN INCHES FOR REDUCED PLANS 0 1 2 3

CU 12235
EA 071631

DISREGARD PRINTS BEARING EARLIER REVISION DATES
REVISION DATES (PRELIMINARY STAGE ONLY) 04-09-09 07-27-09

SHEET 2 OF 10

FILE => mrcb-c-rcbdt01.dgn

USERNAME => trmnguye DATE PLOTTED => 04-FEB-2010 TIME PLOTTED => 11:22

DIST	COUNTY	ROUTE	POST MILES TOTAL PROJECT	SHEET No	TOTAL SHEETS
12	Ora	22,405, 605	R0.3/R0.9, 22.3/24.0,3.0/R1.6	1912	1929

REGISTERED CIVIL ENGINEER 07-27-09 DATE

2-1-10
PLANS APPROVAL DATE

REGISTERED PROFESSIONAL ENGINEER MICHAEL A. WISE No. C70400 Exp. 9-30-10 CIVIL STATE OF CALIFORNIA

The State of California or its officers or agents shall not be responsible for the accuracy or completeness of scanned copies of this plan sheet.

ORANGE COUNTY TRANSPORTATION AUTHORITY
550 S. MAIN STREET
ORANGE, CA 92863-1584

AECOM USA, Inc.
999 TOWN & COUNTRY RD, ORANGE, CA 92868
T 714-567-2501 F 714-567-2441

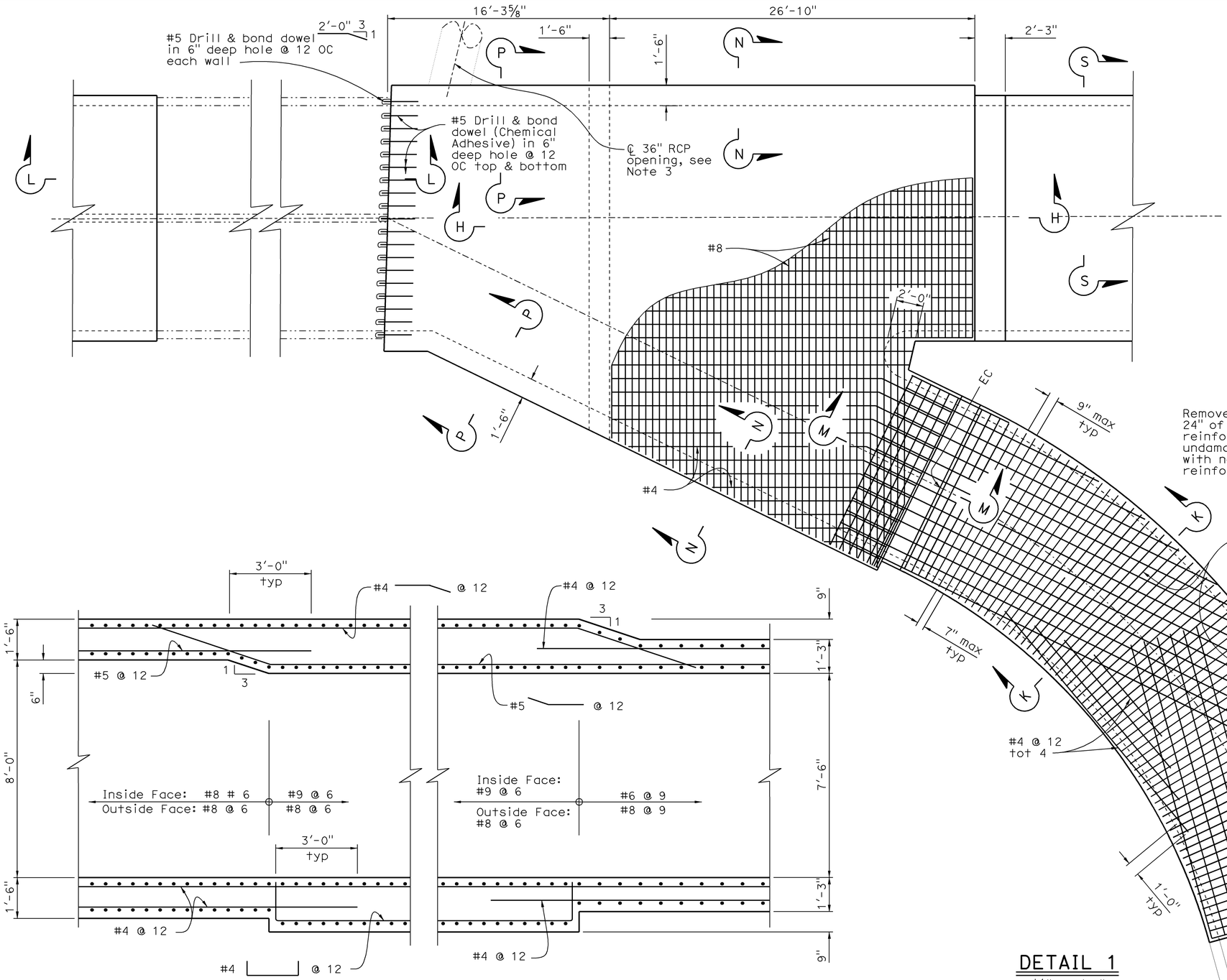

SECTION H-H
½" = 1'-0"

DETAIL 1
¼" = 1'-0"

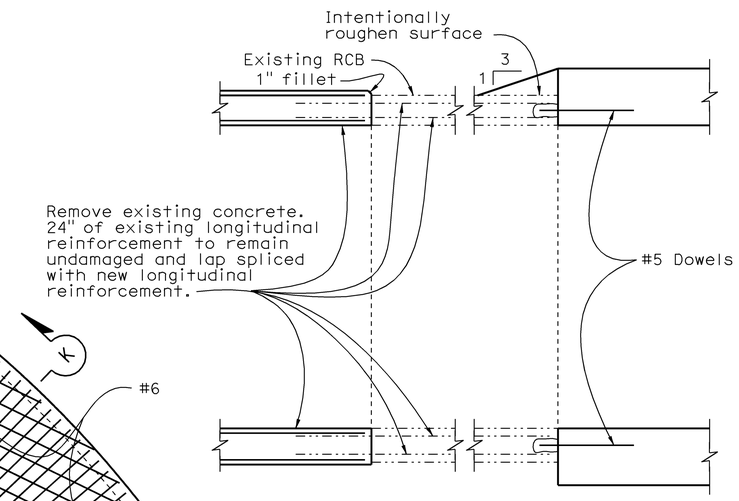

SECTION L-L
½" = 1'-0"

Notes:

1. For Sections K-K, M-M, N-N and P-P, see "Montecito RC Box Culvert Extension Sections and Details No. 3" sheet.
2. For Sections R-R, and S-S, see "Montecito RC Box Culvert Extension Sections and Details No. 4" sheet.
3. For RCP opening detail, see "Montecito RC Box Culvert Extension Sections and Details No. 3" sheet.

Sudhakar Vatti
DESIGN OVERSIGHT Sudhakar Vatti
8-10-09
SIGN OFF DATE

	BY	CHECKED
DESIGN	D. He	M. Wise
DETAILS	E. Landas	M. Wise
QUANTITIES	D. He	T. Jodoin

PREPARED FOR THE STATE OF CALIFORNIA DEPARTMENT OF TRANSPORTATION

Kosalram Krishnan
PROJECT ENGINEER

BRIDGE NO. –
POST MILE 23.6

MONTECITO RC BOX CULVERT EXTENSION
SECTIONS AND DETAILS NO. 2

DESIGN DETAIL SHEET (ENGLISH) (REV. 06-01-09)

ORIGINAL SCALE IN INCHES FOR REDUCED PLANS 0 1 2 3

CU 12235
EA 071631

DISREGARD PRINTS BEARING EARLIER REVISION DATES
REVISION DATES (PRELIMINARY STAGE ONLY) 04-07-09 07-27-09

SHEET 3 OF 10

FILE => mrcb-c-rcbdt02.dgn

USERNAME => trmngoye DATE PLOTTED => 04-FEB-2010 TIME PLOTTED => 11:22

DIST	COUNTY	ROUTE	POST MILES TOTAL PROJECT	SHEET No	TOTAL SHEETS
12	Ora	22,405, 605	R0.3/R0.9, 22.3/24.0,3.0/R1.6	1913	1929

REGISTERED CIVIL ENGINEER — DATE 07-27-09

2-1-10
PLANS APPROVAL DATE

REGISTERED PROFESSIONAL ENGINEER — MICHAEL A. WISE — No. C70400 — Exp. 9-30-10 — CIVIL — STATE OF CALIFORNIA

The State of California or its officers or agents shall not be responsible for the accuracy or completeness of scanned copies of this plan sheet.

ORANGE COUNTY TRANSPORTATION AUTHORITY
550 S. MAIN STREET
ORANGE, CA 92863-1584

AECOM USA, Inc.
999 TOWN & COUNTRY RD, ORANGE, CA 92868
T 714-567-2501 F 714-567-2441

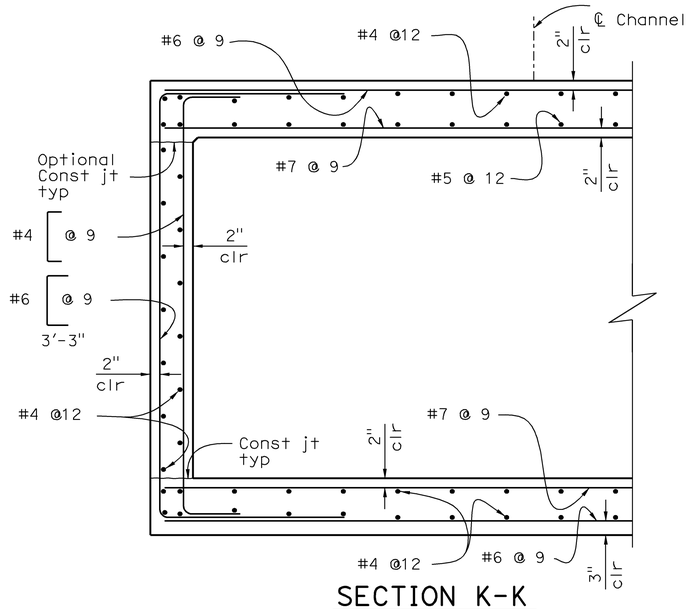

SECTION K-K

¾" = 1'-0"

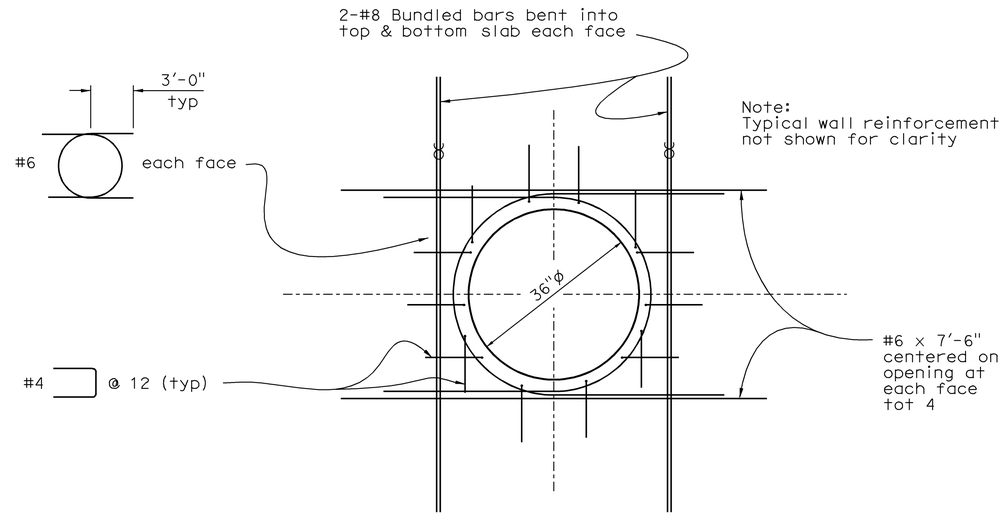

RCP OPENING DETAIL

¾" = 1'-0"

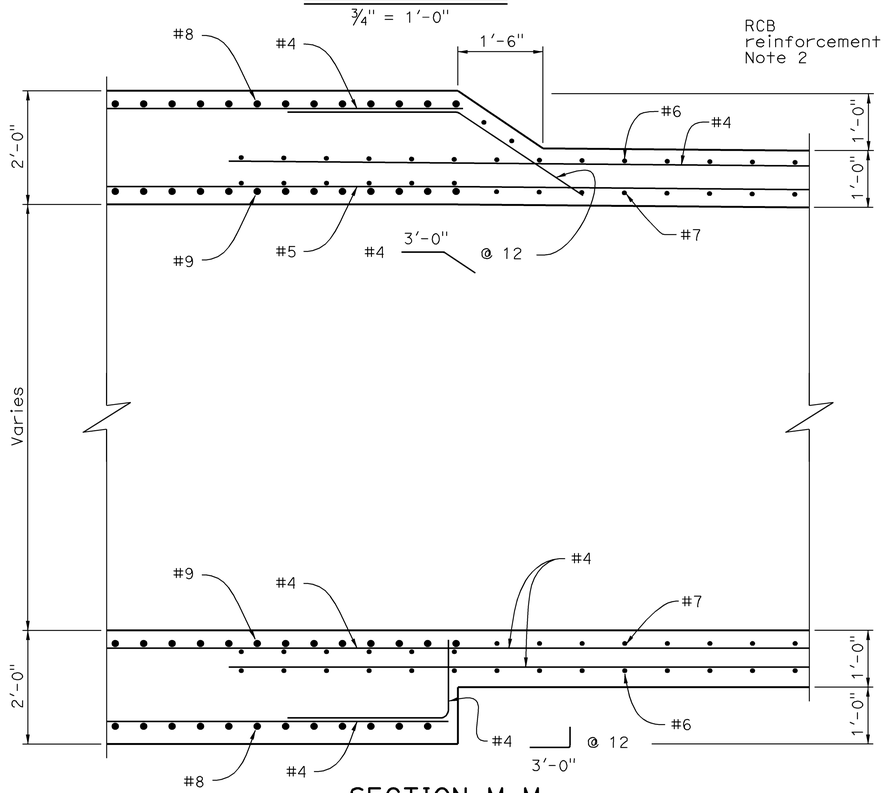

SECTION M-M

¾" = 1'-0"

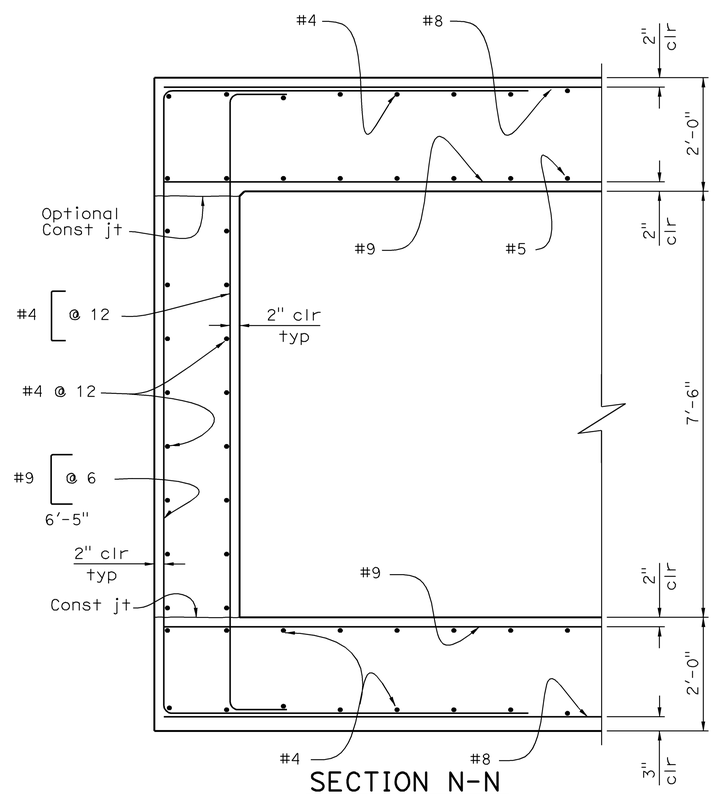

SECTION N-N

¾" = 1'-0"

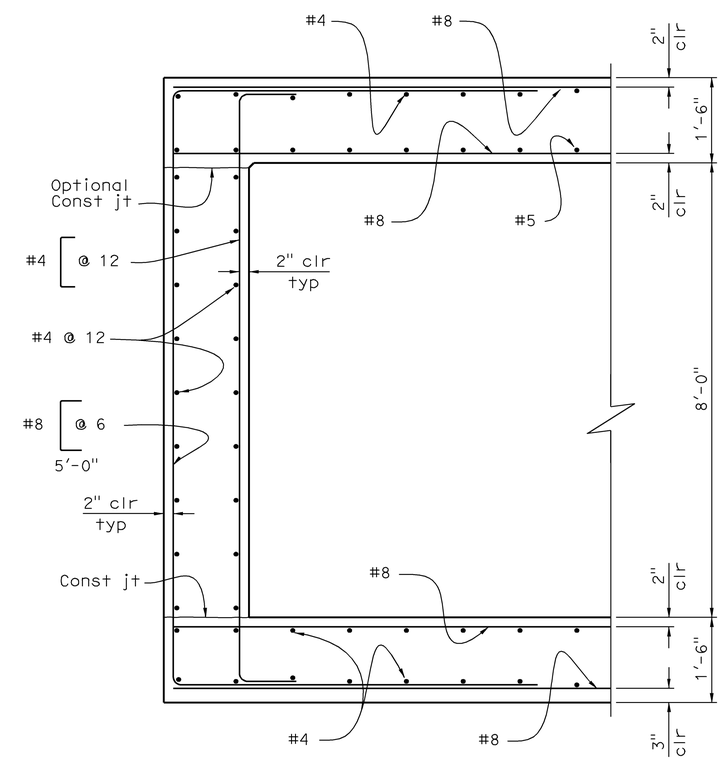

SECTION P-P

¾" = 1'-0"

Sudhakar Vatti
DESIGN OVERSIGHT — Sudhakar Vatti
8-10-09
SIGN OFF DATE

	BY	CHECKED
DESIGN	D. He	M. Wise
DETAILS	E. Landas	M. Wise
QUANTITIES	D. He	T. Jodoin

PREPARED FOR THE STATE OF CALIFORNIA DEPARTMENT OF TRANSPORTATION

Kosalram Krishnan
PROJECT ENGINEER

BRIDGE NO. –
POST MILE 23.6

MONTECITO RC BOX CULVERT EXTENSION
SECTIONS AND DETAILS NO. 3

DESIGN DETAIL SHEET (ENGLISH) (REV. 06-01-09)

ORIGINAL SCALE IN INCHES FOR REDUCED PLANS 0 1 2 3

CU 12235
EA 071631

DISREGARD PRINTS BEARING EARLIER REVISION DATES

REVISION DATES (PRELIMINARY STAGE ONLY) 04-09-09 07-27-09

SHEET 4 OF 10

FILE => mrcb-c-rcbdt03.dgn

USERNAME => rtimmguye DATE PLOTTED => 04-FEB-2010 TIME PLOTTED => 11:22

DIST	COUNTY	ROUTE	POST MILES TOTAL PROJECT	SHEET No	TOTAL SHEETS
12	Ora	22,405, 605	R0.3/R0.9, 22.3/24.0,3.0/R1.6	1914	1929

REGISTERED CIVIL ENGINEER — DATE 07-27-09

2-1-10
PLANS APPROVAL DATE

REGISTERED PROFESSIONAL ENGINEER — MICHAEL A. WISE — No. C70400 — Exp. 9-30-10 — CIVIL — STATE OF CALIFORNIA

The State of California or its officers or agents shall not be responsible for the accuracy or completeness of scanned copies of this plan sheet.

ORANGE COUNTY TRANSPORTATION AUTHORITY
550 S. MAIN STREET
ORANGE, CA 92863-1584

AECOM USA, Inc.
999 TOWN & COUNTRY RD, ORANGE, CA 92868
T 714-567-2501 F 714-567-2441

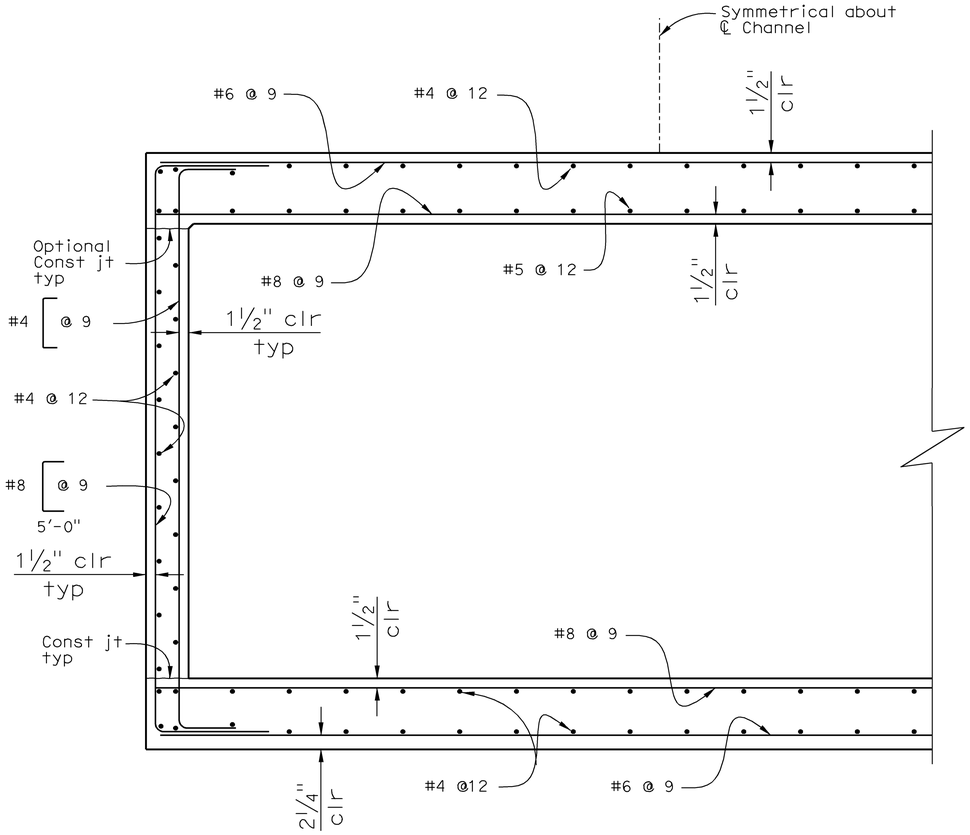

SECTION S-S

¾" = 1'-0"

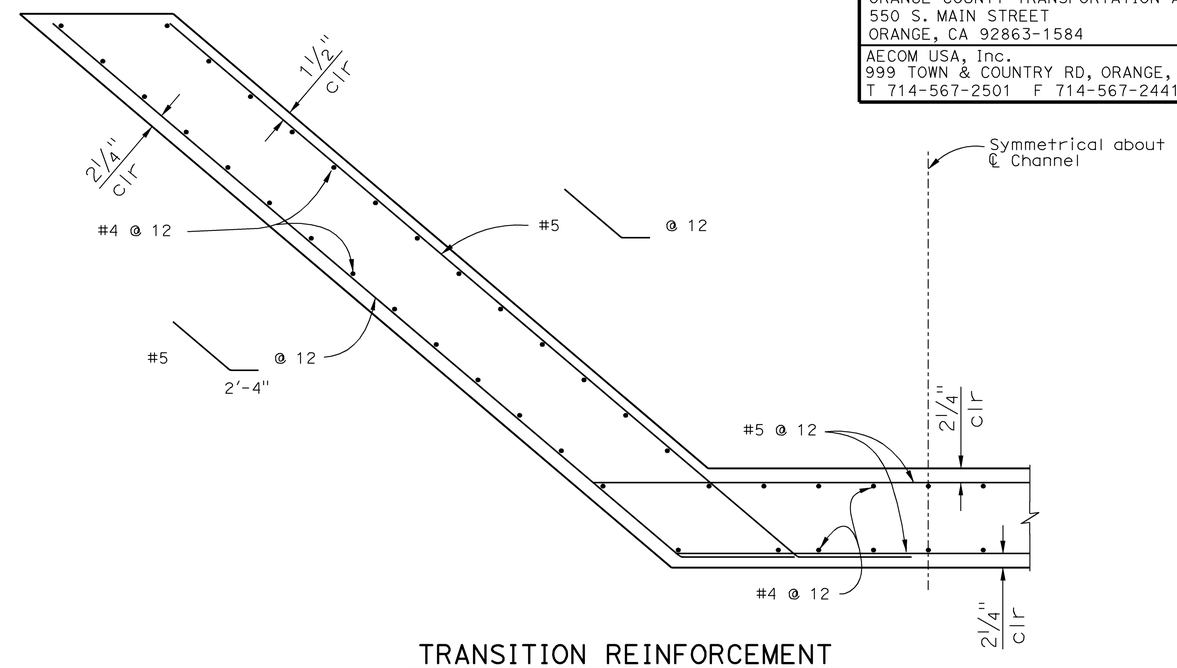

TRANSITION REINFORCEMENT

¾" = 1'-0"

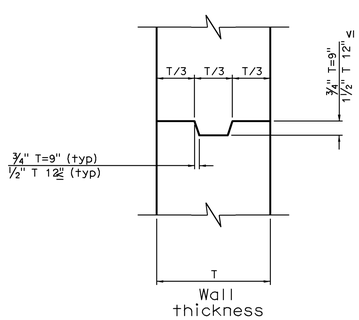

CONSTRUCTION JOINT DETAIL

1½" = 1'-0"

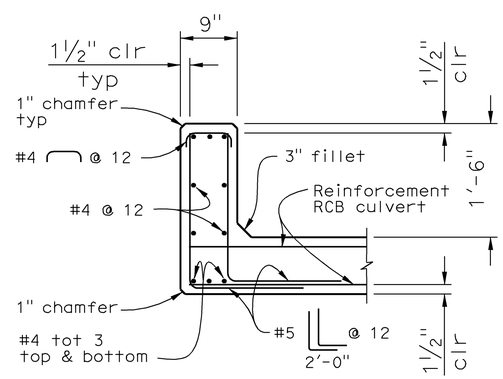

DETAIL 2

¾" = 1'-0"

Sudhakar Vatti
DESIGN OVERSIGHT — Sudhakar Vatti
8-10-09
SIGN OFF DATE

	BY	CHECKED
DESIGN	D. He	M. Wise
DETAILS	E. Landas	M. Wise
QUANTITIES	D. He	T. Jodoin

PREPARED FOR THE STATE OF CALIFORNIA DEPARTMENT OF TRANSPORTATION

Kosalram Krishnan
PROJECT ENGINEER

BRIDGE NO. –
POST MILE 23.6

MONTECITO RC BOX CULVERT EXTENSION
SECTIONS AND DETAILS NO. 4

DESIGN DETAIL SHEET (ENGLISH) (REV. 06-01-09)

ORIGINAL SCALE IN INCHES FOR REDUCED PLANS 0 1 2 3

CU 12235
EA 071631

DISREGARD PRINTS BEARING EARLIER REVISION DATES — REVISION DATES (PRELIMINARY STAGE ONLY) 04-09-09 07-27-09

SHEET 5 OF 10

FILE => mrcb-c-rcbdt04.dgn

USERNAME => trimmguye DATE PLOTTED => 04-FEB-2010 TIME PLOTTED => 11:22

DIST	COUNTY	ROUTE	POST MILES TOTAL PROJECT	SHEET No	TOTAL SHEETS
12	Ora	22,405, 605	R0.3/R0.9, 22.3/24.0,3.0/R1.6	1915	1929

REGISTERED CIVIL ENGINEER — DATE 07-27-09

2-1-10
PLANS APPROVAL DATE

REGISTERED PROFESSIONAL ENGINEER — MICHAEL A. WISE — No. C70400 — Exp. 9-30-10 — CIVIL — STATE OF CALIFORNIA

The State of California or its officers or agents shall not be responsible for the accuracy or completeness of scanned copies of this plan sheet.

ORANGE COUNTY TRANSPORTATION AUTHORITY
550 S. MAIN STREET
ORANGE, CA 92863-1584

AECOM USA, Inc.
999 TOWN & COUNTRY RD, ORANGE, CA 92868
T 714-567-2501 F 714-567-2441

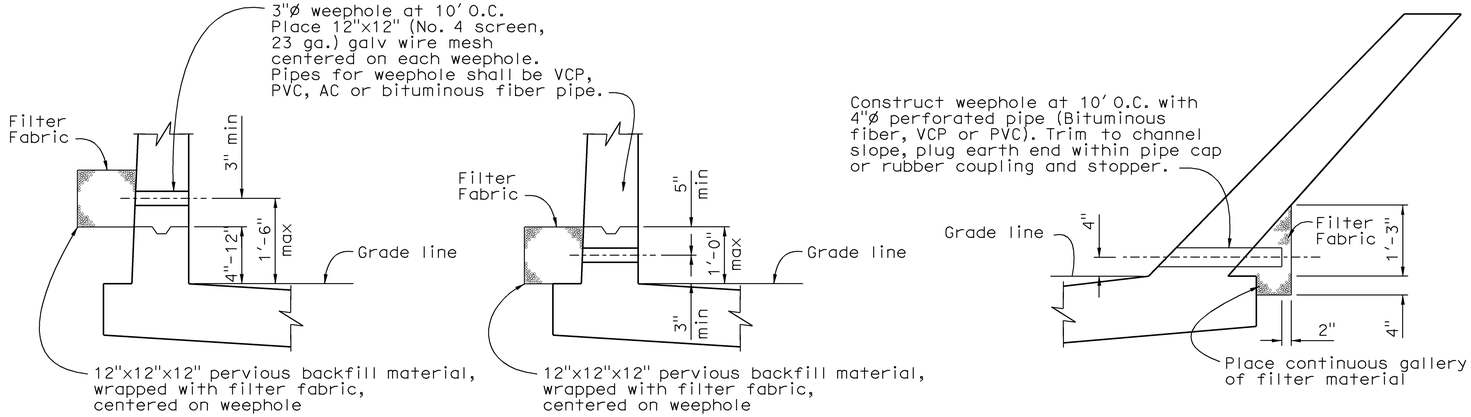

ALTERNATE A — ALTERNATE B — TRAPEZOIDAL CHANNEL

VERTICAL WALL CHANNEL

CHANNEL WEEPHOLES

3/4" = 1'-0"

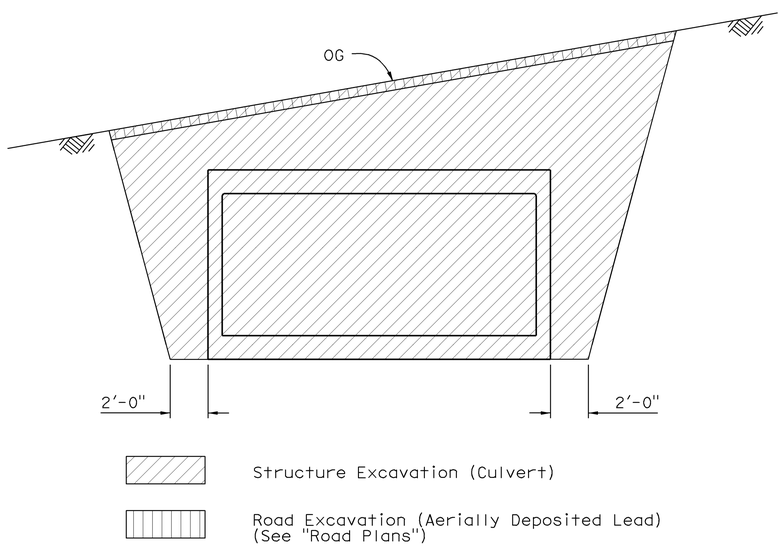

EXCAVATION DIAGRAM

1/4" = 1'-0"

Sudhakar Vatti
DESIGN OVERSIGHT — Sudhakar Vatti
8-10-09
SIGN OFF DATE

	BY	CHECKED
DESIGN	D. He	M. Wise
DETAILS	E. Landas	M. Wise
QUANTITIES	D. He	T. Jodoin

PREPARED FOR THE STATE OF CALIFORNIA DEPARTMENT OF TRANSPORTATION

Kosalram Krishnan
PROJECT ENGINEER

BRIDGE NO. –
POST MILE 23.6

MONTECITO RC BOX CULVERT EXTENSION
SECTIONS AND DETAILS NO. 5

DESIGN DETAIL SHEET (ENGLISH) (REV. 06-01-09)

ORIGINAL SCALE IN INCHES FOR REDUCED PLANS 0 1 2 3

CU 12235
EA 071631

DISREGARD PRINTS BEARING EARLIER REVISION DATES

REVISION DATES (PRELIMINARY STAGE ONLY) 04-09-09 07-27-09

SHEET 6 OF 10

FILE => mrcb-c-rcbdt05.dgn

USERNAME => trimmguye DATE PLOTTED => 04-FEB-2010 TIME PLOTTED => 11:23

REFERENCE: CALTRANS SOIL & ROCK LOGGING, CLASSIFICATION, AND PRESENTATION MANUAL (JUNE 2007)

DIST	COUNTY	ROUTE	POST MILES TOTAL PROJECT	SHEET No	TOTAL SHEETS
12	Ora	22,405, 605	R0.3/R0.9, 22.3/24.0,3.0/R1.6	1916	1929

REGISTERED CIVIL ENGINEER 07/27/09 DATE

2-1-10
PLANS APPROVAL DATE

REGISTERED PROFESSIONAL ENGINEER
ANDREW V. KORKOS
No. GE 2357
Exp. 03-31-2010
GEOTECHNICAL
STATE OF CALIFORNIA

The State of California or its officers or agents shall not be responsible for the accuracy or completeness of electronic copies of this plan sheet.

OCTA
550 SOUTH MAIN STREET
ORANGE, CA 92863

EARTH MECHANICS, INC.
17660, NEWHOPE STREET, SUITE E
FOUNTAIN VALLEY, CA 92708

CEMENTATION

Description	Criteria
Weak	Crumbles or breaks with handling or little finger pressure.
Moderate	Crumbles or breaks with considerable finger pressure.
Strong	Will not crumble or break with finger pressure.

CONSISTENCY OF COHESIVE SOILS

Description	Unconfined Compressive Strength (tsf)	Pocket Penetrometer Measurement (tsf)	Torvane Measurement (tsf)	Field Approximation
Very Soft	< 0.25	< 0.25	< 0.12	Easily penetrated several inches by fist
Soft	0.25 to 0.50	0.25 to 0.50	0.12 to 0.25	Easily penetrated several inches by thumb
Medium Stiff	0.50 to 1.0	0.50 to 1.0	0.25 to 0.50	Penetrated several inches by thumb with moderate effort
Stiff	1 to 2	1 to 2	0.50 to 1.0	Readily indented by thumb but penetrated only with great effort
Very Stiff	2 to 4	2 to 4	1.0 to 2.0	Readily indented by thumbnail
Hard	> 4.0	> 4.0	> 2.0	Indented by thumbnail with difficulty

BOREHOLE IDENTIFICATION

Symbol	Hole Type	Description
Size	A	Auger Boring
Size	R P	Rotary drilled boring Rotary percussion boring (air)
Size	R	Rotary drilled diamond core
Size	HD HA	Hand driven (1-inch soil tube) Hand Auger
●	D	Dynamic Cone Penetration Boring
▲	CPT	Cone Penetration Test (ASTM D 5778-95)
□	O	Other

Note: Size in inches.

PLASTICITY OF FINE-GRAINED SOILS

Description	Criteria
Nonplastic	A 1/8-inch thread cannot be rolled at any water content.
Low	The thread can barely be rolled and the lump cannot be formed when drier than the plastic limit.
Medium	The thread is easy to roll and not much time is required to reach the plastic limit. The thread cannot be rerolled after reaching the plastic limit. The lump crumbles when drier than the plastic limit.
High	It takes considerable time rolling and kneading to reach the plastic limit. The thread can be rerolled several times after reaching the plastic limit. The lump can be formed without crumbling when drier than the plastic limit.

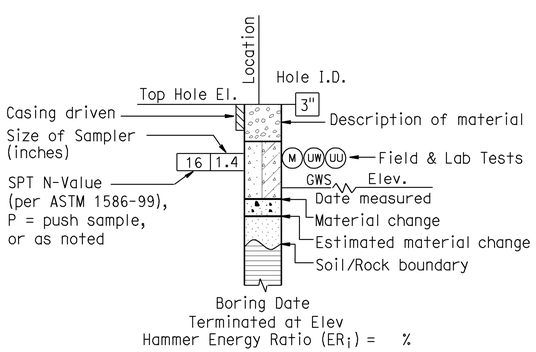

ROTARY BORING

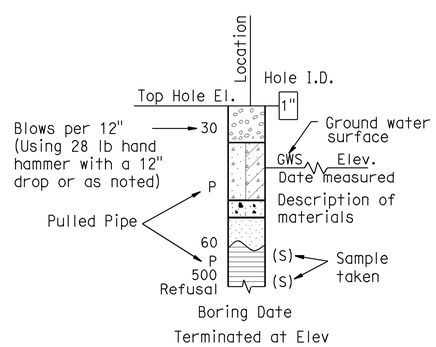

HAND BORING

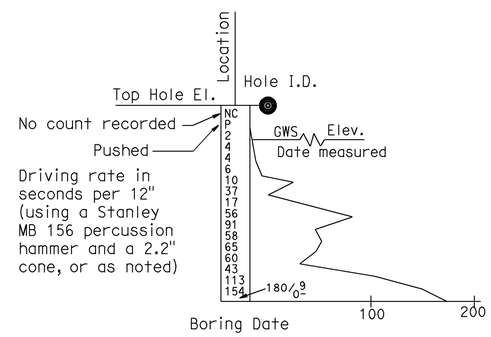

DYNAMIC CONE PENETRATION BORING

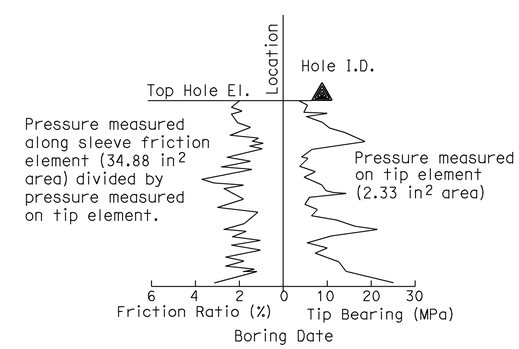

CONE PENETRATION TEST (CPT) SOUNDING

Sudhakar Vatti
DESIGN OVERSIGHT Sudhakar Vatti

8-10-09
SIGN OFF DATE

DRAWN BY: K.Pratheepan

CHECKED BY: G.J.Gunaranjan

FIELD INVESTIGATION BY:
R.Jie

PREPARED FOR THE STATE OF CALIFORNIA DEPARTMENT OF TRANSPORTATION

A.V.Korkos
PROJECT ENGINEER

BRIDGE NO. –
POST MILE 23.6

MONTECITO RC BOX CULVERT EXTENSION
LOG OF TEST BORINGS NO. 1

OSF CIVIL LOG OF TEST BORINGS SHEET (ENGLISH) (REV. 2-25-05)

ORIGINAL SCALE IN INCHES FOR REDUCED PLANS 0 1 2 3

CU 12235
EA 071631

DISREGARD PRINTS BEARING EARLIER REVISION DATES

REVISION DATES (PRELIMINARY STAGE ONLY) 04/06/09 07/27/09

SHEET 7 OF 10

FILE => mrcb-ltb01.dgn

USERNAME => frmnguye DATE PLOTTED => 04-FEB-2010 TIME PLOTTED => 11:23

REFERENCE: CALTRANS SOIL & ROCK LOGGING, CLASSIFICATION, AND PRESENTATION MANUAL (JUNE 2007)

DIST	COUNTY	ROUTE	POST MILES TOTAL PROJECT	SHEET No	TOTAL SHEETS
12	Ora	22,405, 605	R0.3/R0.9, 22.3/24.0,3.0/R1.6	1917	1929

07/27/09
REGISTERED CIVIL ENGINEER DATE

2-1-10
PLANS APPROVAL DATE

REGISTERED PROFESSIONAL ENGINEER — ANDREW V. KORKOS — No. GE 2357 — Exp. 03-31-2010 — GEOTECHNICAL — STATE OF CALIFORNIA

The State of California or its officers or agents shall not be responsible for the accuracy or completeness of electronic copies of this plan sheet.

OCTA
550 SOUTH MAIN STREET
ORANGE, CA 92863

EARTH MECHANICS, INC.
17660, NEWHOPE STREET, SUITE E
FOUNTAIN VALLEY, CA 92708

GROUP SYMBOLS AND NAMES

Graphic/Symbol	Group Names	Graphic/Symbol	Group Names
GW	Well-graded GRAVEL Well-graded GRAVEL with SAND	CL	Lean CLAY Lean CLAY with SAND Lean CLAY with GRAVEL SANDY lean CLAY SANDY lean CLAY with GRAVEL GRAVELLY lean CLAY GRAVELLY lean CLAY with SAND
GP	Poorly graded GRAVEL Poorly graded GRAVEL with SAND		
GW-GM	Well-graded GRAVEL with SILT Well-graded GRAVEL with SILT and SAND	CL-ML	SILTY CLAY SILTY CLAY with SAND SILTY CLAY with GRAVEL SANDY SILTY CLAY SANDY SILTY CLAY with GRAVEL GRAVELLY SILTY CLAY GRAVELLY SILTY CLAY with SAND
GW-GC	Well-graded GRAVEL with CLAY (or SILTY CLAY) Well-graded GRAVEL with CLAY and SAND (or SILTY CLAY and SAND)		
GP-GM	Poorly graded GRAVEL with SILT Poorly graded GRAVEL with SILT and SAND	ML	SILT SILT with SAND SILT with GRAVEL SANDY SILT SANDY SILT with GRAVEL GRAVELLY SILT GRAVELLY SILT with SAND
GP-GC	Poorly graded GRAVEL with CLAY (or SILTY CLAY) Poorly graded GRAVEL with CLAY and SAND (or SILTY CLAY and SAND)		
GM	SILTY GRAVEL SILTY GRAVEL with SAND	OL	ORGANIC lean CLAY ORGANIC lean CLAY with SAND ORGANIC lean CLAY with GRAVEL SANDY ORGANIC lean CLAY SANDY ORGANIC lean CLAY with GRAVEL GRAVELLY ORGANIC lean CLAY GRAVELLY ORGANIC lean CLAY with SAND
GC	CLAYEY GRAVEL CLAYEY GRAVEL with SAND		
GC-GM	SILTY, CLAYEY GRAVEL SILTY, CLAYEY GRAVEL with SAND	OL	ORGANIC SILT ORGANIC SILT with SAND ORGANIC SILT with GRAVEL SANDY ORGANIC SILT SANDY ORGANIC SILT with GRAVEL GRAVELLY ORGANIC SILT GRAVELLY ORGANIC SILT with SAND
SW	Well-graded SAND Well-graded SAND with GRAVEL		
SP	Poorly graded SAND Poorly graded SAND with GRAVEL	CH	Fat CLAY Fat CLAY with SAND Fat CLAY with GRAVEL SANDY fat CLAY SANDY fat CLAY with GRAVEL GRAVELLY fat CLAY GRAVELLY fat CLAY with SAND
SW-SM	Well-graded SAND with SILT Well-graded SAND with SILT and GRAVEL		
SW-SC	Well-graded SAND with CLAY (or SILTY CLAY) Well-graded SAND with CLAY and GRAVEL (or SILTY CLAY and GRAVEL)	MH	Elastic SILT Elastic SILT with SAND Elastic SILT with GRAVEL SANDY elastic SILT SANDY elastic SILT with GRAVEL GRAVELLY elastic SILT GRAVELLY elastic SILT with SAND
SP-SM	Poorly graded SAND with SILT Poorly graded SAND with SILT and GRAVEL		
SP-SC	Poorly graded SAND with CLAY (or SILTY CLAY) Poorly graded SAND with CLAY and GRAVEL (or SILTY CLAY and GRAVEL)	OH	ORGANIC fat CLAY ORGANIC fat CLAY with SAND ORGANIC fat CLAY with GRAVEL SANDY ORGANIC fat CLAY SANDY ORGANIC fat CLAY with GRAVEL GRAVELLY ORGANIC fat CLAY GRAVELLY ORGANIC fat CLAY with SAND
SM	SILTY SAND SILTY SAND with GRAVEL		
SC	CLAYEY SAND CLAYEY SAND with GRAVEL	OH	ORGANIC elastic SILT ORGANIC elastic SILT with SAND ORGANIC elastic SILT with GRAVEL SANDY ORGANIC elastic SILT SANDY ORGANIC elastic SILT with GRAVEL GRAVELLY ORGANIC elastic SILT GRAVELLY ORGANIC elastic SILT with SAND
SC-SM	SILTY, CLAYEY SAND SILTY, CLAYEY SAND with GRAVEL		
PT	PEAT	OL/OH	ORGANIC SOIL ORGANIC SOIL with SAND ORGANIC SOIL with GRAVEL SANDY ORGANIC SOIL SANDY ORGANIC SOIL with GRAVEL GRAVELLY ORGANIC SOIL GRAVELLY ORGANIC SOIL with SAND
	COBBLES COBBLES and BOULDERS BOULDERS		

FIELD AND LABORATORY TESTING

- (C) Consolidation (ASTM D 2435)
- (CL) Collapse Potential (ASTM D 5333)
- (CP) Compaction Curve (CTM 216)
- (CR) Corrosivity Testing (CTM 643, CTM 422, CTM 417)
- (CU) Consolidated Undrained Triaxial (ASTM D 4767)
- (DS) Direct Shear (ASTM D 3080)
- (EI) Expansion Index (ASTM D 4829)
- (M) Moisture Content (ASTM D 2216)
- (OC) Organic Content-% (ASTM D 2974)
- (P) Permeability (CTM 220)
- (PA) Particle Size Analysis (ASTM D 422)
- (PI) Plasticity Index (AASHTO T 90) Liquid Limit (AASHTO T 89)
- (PL) Point Load Index (ASTM D 5731)
- (PM) Pressure Meter
- (PP) Pocket Penetrometer
- (R) R-Value (CTM 301)
- (SE) Sand Equivalent (CTM 217)
- (SG) Specific Gravity (AASHTO T 100)
- (SL) Shrinkage Limit (ASTM D 427)
- (SW) Swell Potential (ASTM D 4546)
- (TV) Pocket Torvane
- (UC) Unconfined Compression-Soil (ASTM D 2166) Unconfined Compression-Rock (ASTM D 2938)
- (UU) Unconsolidated Undrained Triaxial (ASTM D 2850)
- (UW) Unit Weight (ASTM D 4767)
- (VS) Vane Shear (AASHTO T 223)

APPARENT DENSITY OF COHESIONLESS SOILS

Description	SPT N_{60} (Blows / 12 inches)
Very loose	0 - 4
Loose	5 - 10
Medium Dense	11 - 30
Dense	31 - 50
Very Dense	> 50

MOISTURE

Description	Criteria
Dry	Absence of moisture, dusty, dry to the touch
Moist	Damp but no visible water
Wet	Visible free water, usually soil is below water table

PERCENT OR PROPORTION OF SOILS

Description	Criteria
Trace	Particles are present but estimated to be less than 5%
Few	5 to 10%
Little	15 to 25%
Some	30 to 45%
Mostly	50 to 100%

PARTICLE SIZE

Description		Size
Boulder		> 12"
Cobble		3" to 12"
Gravel	Coarse	3/4" to 3"
	Fine	No. 4 to 3/4"
Sand	Coarse	No. 10 to No. 4
	Medium	No. 40 to No. 10
	Fine	No. 200 to No. 40

Sudhakar Vatti
DESIGN OVERSIGHT Sudhakar Vatti
8-10-09
SIGN OFF DATE

DRAWN BY: K.Pratheepan
CHECKED BY: G.J.Gunaranjan

FIELD INVESTIGATION BY:
R.Jie

PREPARED FOR THE STATE OF CALIFORNIA DEPARTMENT OF TRANSPORTATION

A.V.Korkos
PROJECT ENGINEER

BRIDGE NO. -
POST MILE 23.6

MONTECITO RC BOX CULVERT EXTENSION
LOG OF TEST BORINGS NO. 2

OSF CIVIL LOG OF TEST BORINGS SHEET (ENGLISH) (REV. 2-25-05)

ORIGINAL SCALE IN INCHES FOR REDUCED PLANS 0 1 2 3

CU 12235
EA 071631

DISREGARD PRINTS BEARING EARLIER REVISION DATES
REVISION DATES (PRELIMINARY STAGE ONLY) 04/06/09 07/21/09

SHEET 8 OF 10

FILE => mrcb-ltb02.dgn

USERNAME => trmnguye DATE PLOTTED => 04-FEB-2010 TIME PLOTTED => 11:23

DIST	COUNTY	ROUTE	POST MILES TOTAL PROJECT	SHEET No	TOTAL SHEETS
12	Ora	22,405, 605	R0.3/R0.9, 22.3/24.0,3.0/R1.6	1918	1929

REGISTERED CIVIL ENGINEER 07/27/09 DATE

2-1-10
PLANS APPROVAL DATE

The State of California or its officers or agents shall not be responsible for the accuracy or completeness of electronic copies of this plan sheet.

REGISTERED PROFESSIONAL ENGINEER ANDREW V. KORKOS No. GE 2357 Exp. 03-31-2010 GEOTECHNICAL STATE OF CALIFORNIA

OCTA
550 SOUTH MAIN STREET
ORANGE, CA 92863

EARTH MECHANICS, INC.
17660, NEWHOPE STREET, SUITE E
FOUNTAIN VALLEY, CA 92708

BENCHMARKS:

Monument: 1A-144-04

Described by OCS 2005 - Found 3.75" OCS aluminum benchmark disk stamped "1A-144-04", set in the southwesterly corner of a 4.4 ft by 4.4 ft concrete catch basin. Monument is located in the northeasterly corner of the intersection of Seal Beach Boulevard and St. Cloud Drive, 44 ft easterly of the centerline of Seal Beach Boulevard and 58 ft northerly of the centerline of St. Cloud Dr. Monument is set level with the sidewalk.

Elevation: 15.37 feet

NOTES:

(1) This LOTB sheet (Boring Record) was prepared in accordance with the Caltrans Soil and Rock Classification Logging, Classification and Presentation Manual (June 2007).

(2) 2.4" samples were taken using a California Modified Sampler.

(3) A rope and cat-head hammer system consisting of a hammer weight of 140 lbs falling a distance of 30" was used to advance the drive sampler.

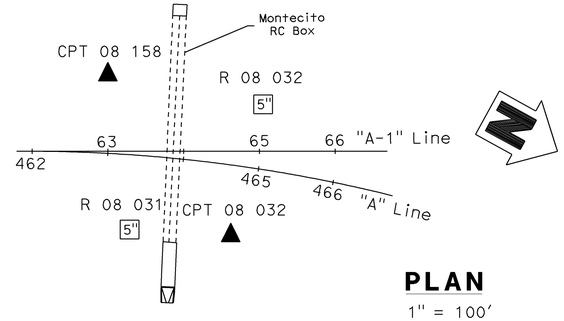

PLAN
1" = 100'

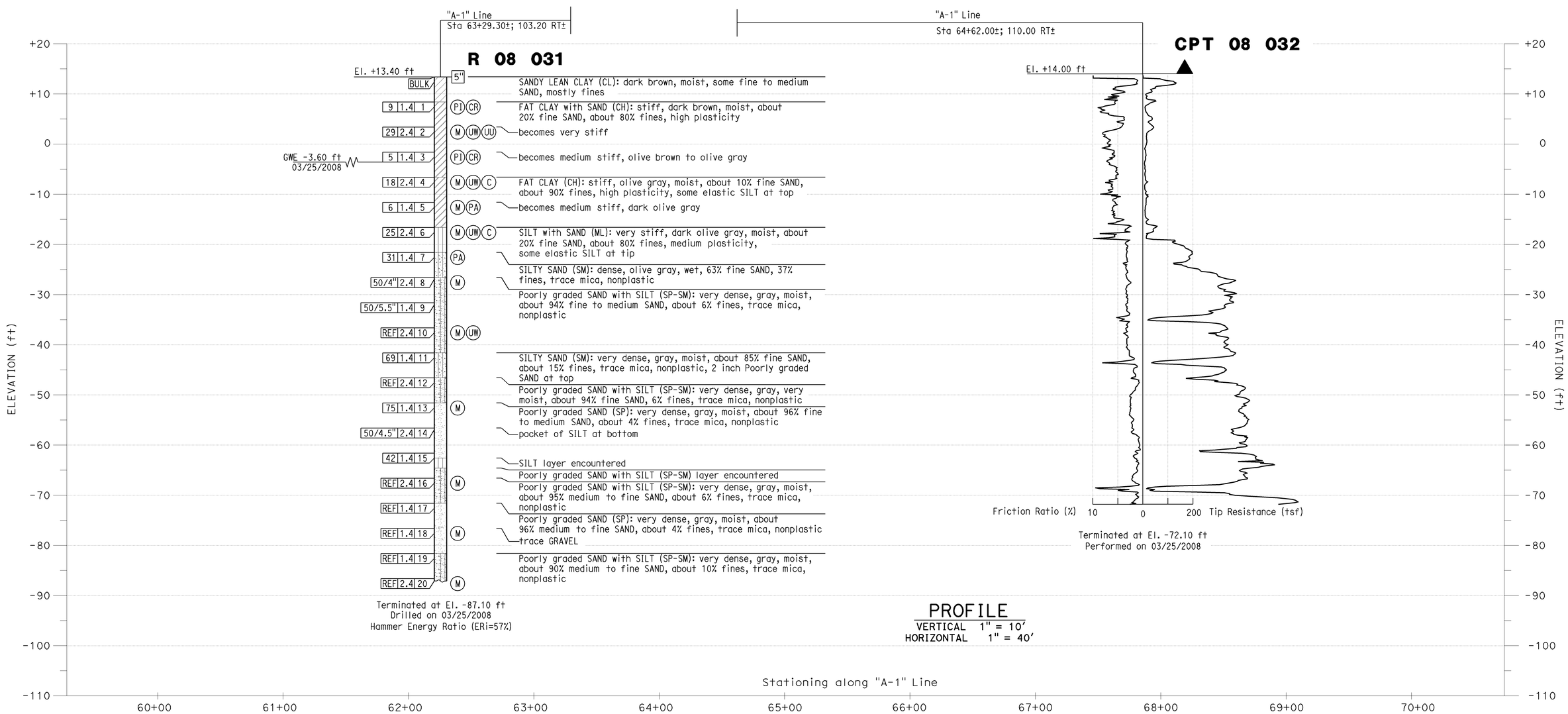

PROFILE
VERTICAL 1" = 10'
HORIZONTAL 1" = 40'

Sudhakar Vatti
DESIGN OVERSIGHT Sudhakar Vatti
8-10-09
SIGN OFF DATE

DRAWN BY: K.Pratheepan
CHECKED BY: G.J.Gunaranjan

FIELD INVESTIGATION BY:
R.Jie

PREPARED FOR THE STATE OF CALIFORNIA DEPARTMENT OF TRANSPORTATION

A.V.Korkos
PROJECT ENGINEER

BRIDGE NO. –
POST MILE 23.6

MONTECITO RC BOX CULVERT EXTENSION
LOG OF TEST BORINGS NO. 3

OSF CIVIL LOG OF TEST BORINGS SHEET (ENGLISH) (REV. 2-25-05)

ORIGINAL SCALE IN INCHES FOR REDUCED PLANS 0 1 2 3

CU 12235
EA 071631

DISREGARD PRINTS BEARING EARLIER REVISION DATES
REVISION DATES (PRELIMINARY STAGE ONLY) 04/06/09 07/27/09

SHEET 9 OF 10

FILE => mrcb-ltb03.dgn

USERNAME => rtrmnguye DATE PLOTTED => 04-FEB-2010 TIME PLOTTED => 11:23

DIST	COUNTY	ROUTE	POST MILES TOTAL PROJECT	SHEET No	TOTAL SHEETS
12	Ora	22,405, 605	R0.3/R0.9, 22.3/24.0,3.0/R1.6	1919	1929

REGISTERED CIVIL ENGINEER — DATE 07/27/09

2-1-10
PLANS APPROVAL DATE

REGISTERED PROFESSIONAL ENGINEER — ANDREW V. KORKOS — No. GE 2357 — Exp. 03-31-2010 — GEOTECHNICAL — STATE OF CALIFORNIA

The State of California or its officers or agents shall not be responsible for the accuracy or completeness of electronic copies of this plan sheet.

OCTA
550 SOUTH MAIN STREET
ORANGE, CA 92863

EARTH MECHANICS, INC.
17660, NEWHOPE STREET, SUITE E
FOUNTAIN VALLEY, CA 92708

BENCHMARKS:

Monument: 1A-144-04

Described by OCS 2005 - Found 3.75" OCS aluminum benchmark disk stamped "1A-144-04", set in the southwesterly corner of a 4.4 ft by 4.4 ft concrete catch basin. Monument is located in the northeasterly corner of the intersection of Seal Beach Boulevard and St. Cloud Drive, 44 ft easterly of the centerline of Seal Beach Boulevard and 58 ft northerly of the centerline of St. Cloud Dr. Monument is set level with the sidewalk.

Elevation: 15.37 feet

NOTES:

(1) This LOTB sheet (Boring Record) was prepared in accordance with the Caltrans Soil and Rock Classification Logging, Classification and Presentation Manual (June 2007).

(2) 2.4" samples were taken using a California Modified Sampler.

(3) A rope and cat-head hammer system consisting of a hammer weight of 140 lbs falling a distance of 30" was used to advance the drive sampler.

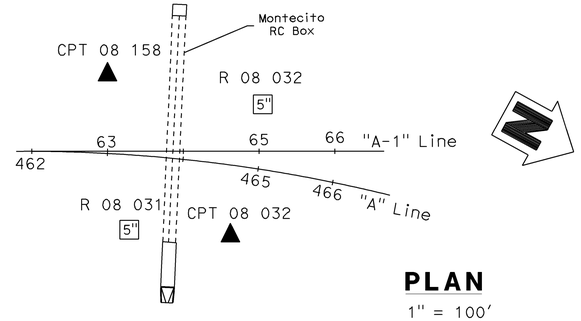

PLAN
1" = 100'

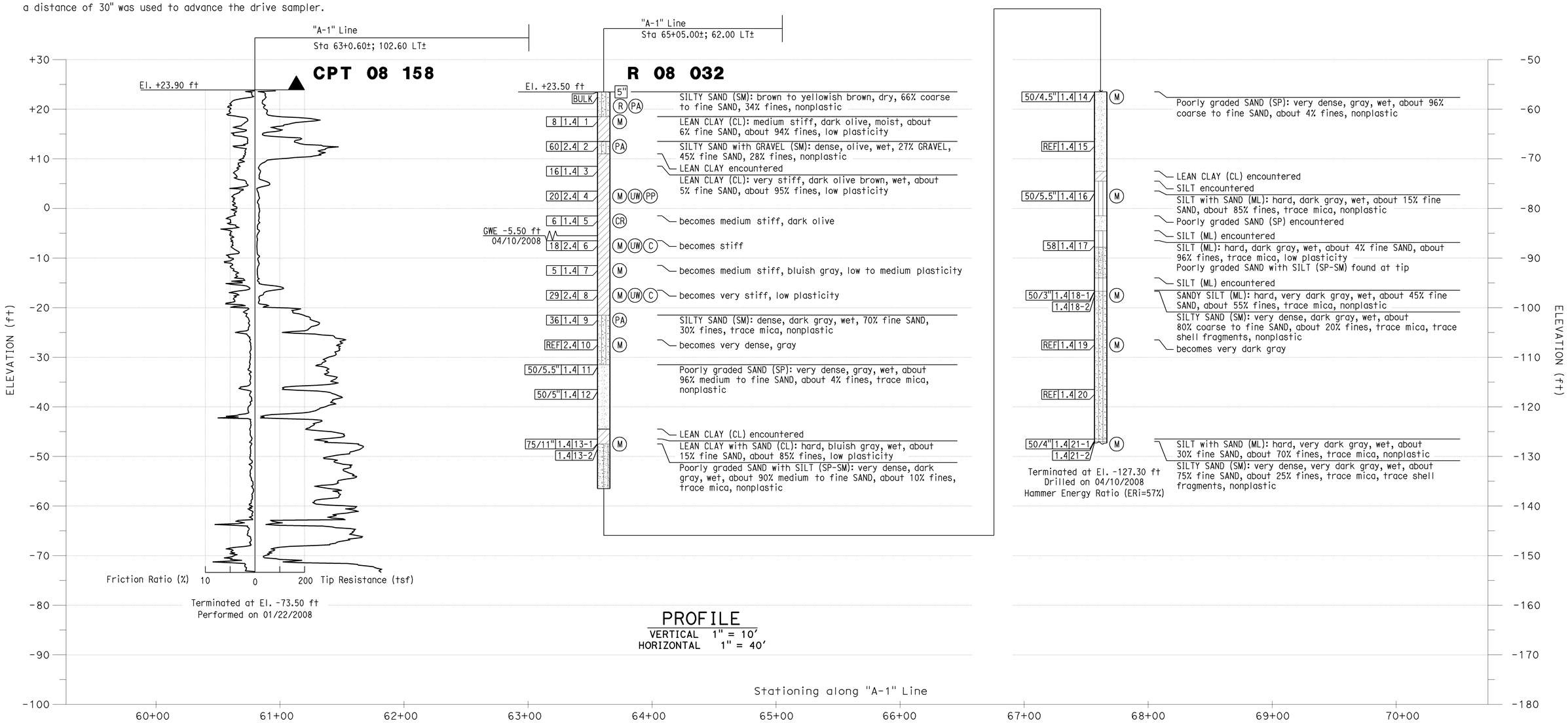

PROFILE
VERTICAL 1" = 10'
HORIZONTAL 1" = 40'

Sudhakar Vatti — DESIGN OVERSIGHT Sudhakar Vatti; 8-10-09 SIGN OFF DATE	DRAWN BY: K.Pratheepan; CHECKED BY: G.J.Gunaranjan	FIELD INVESTIGATION BY: R.Jie	PREPARED FOR THE STATE OF CALIFORNIA DEPARTMENT OF TRANSPORTATION	A.V.Korkos PROJECT ENGINEER	BRIDGE NO. – ; POST MILE 23.6	MONTECITO RC BOX CULVERT EXTENSION — LOG OF TEST BORINGS NO. 4

OSF CIVIL LOG OF TEST BORINGS SHEET (ENGLISH) (REV. 2-25-05)

ORIGINAL SCALE IN INCHES FOR REDUCED PLANS 0 1 2 3

CU 12235
EA 071631

DISREGARD PRINTS BEARING EARLIER REVISION DATES — REVISION DATES (PRELIMINARY STAGE ONLY) 04/06/09 07/27/09

SHEET 10 OF 10

FILE => mrcb-ltb04.dgn

USERNAME => trmnguye DATE PLOTTED => 04-FEB-2010 TIME PLOTTED => 11:23

DIST	COUNTY	ROUTE	POST MILES TOTAL PROJECT	SHEET No	TOTAL SHEETS
12	Ora	22,405, 605	R0.3/R0.9, 22.3/24.0,3.0/R1.6	1920	1929

REGISTERED CIVIL ENGINEER 7/27/09 DATE

2-1-10
PLANS APPROVAL DATE

The State of California or its officers or agents shall not be responsible for the accuracy or completeness of electronic copies of this plan sheet.

REGISTERED PROFESSIONAL ENGINEER VINH TRINH No. C 50685 Exp. 9-30-09 CIVIL STATE OF CALIFORNIA

OCTA
550 SOUTH MAIN STREET
ORANGE, CA 92863

WKE, Inc.
400 N. Tustin Ave, Suite 285
Santa Ana, CA 92705

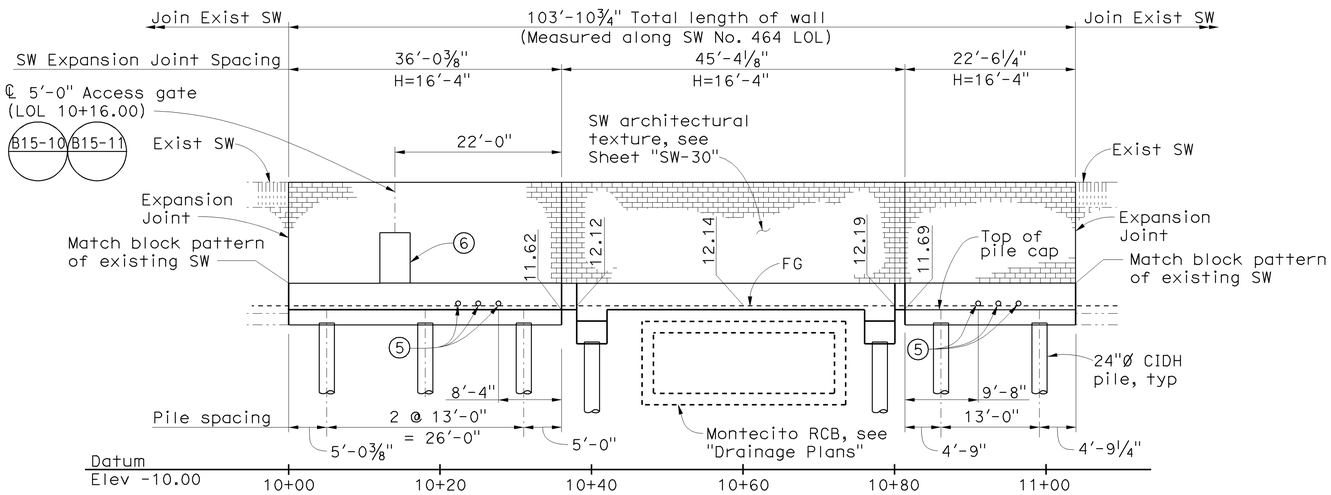

DEVELOPED MIRROR ELEVATION

1" = 10'

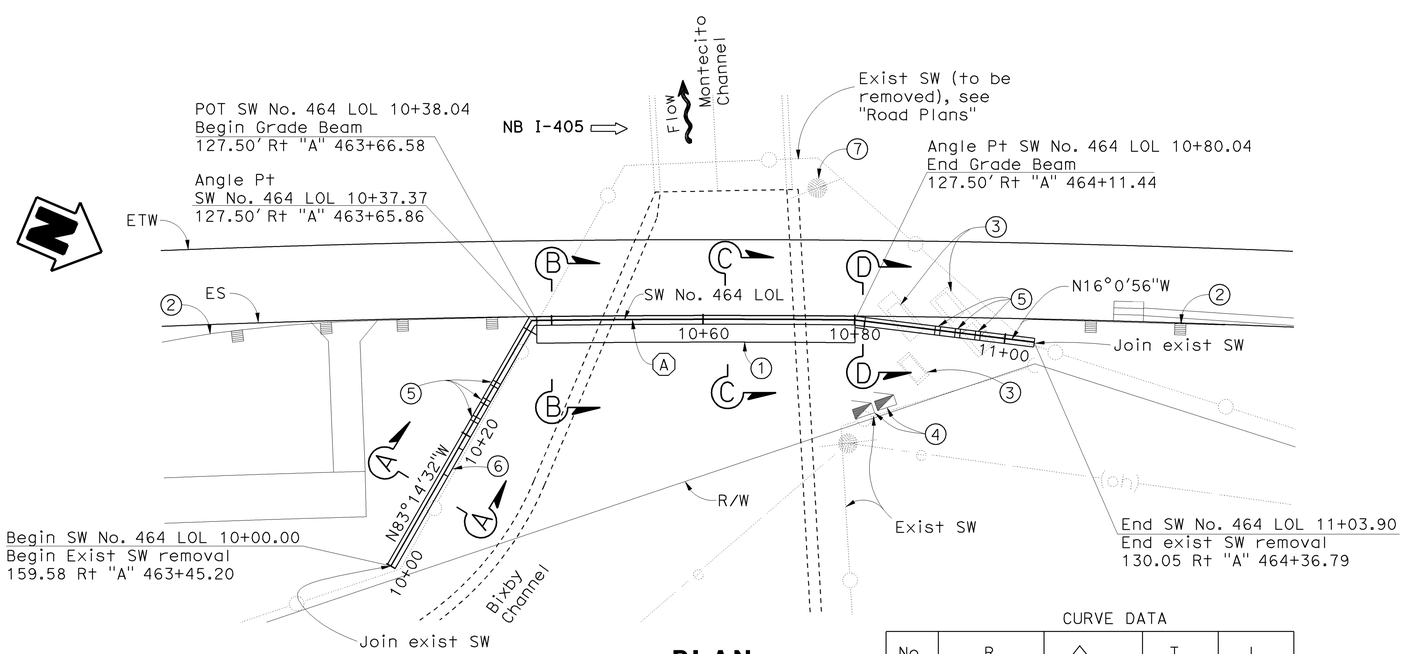

PLAN

1" = 10'

CURVE DATA

No.	R	△	T	L
A	1872.46'	1°18'20"	21.34'	42.67'

NOTE:
THE CONTRACTOR SHALL VERIFY ALL CONTROLLING FIELD DIMENSIONS BEFORE ORDERING OR FABRICATING ANY MATERIAL.

INDEX TO PLANS

1. General Plan No. 1
2. General Plan No. 2
3. Grade Beam Details No. 1
4. Grade Beam Details No. 2
5. Grade Beam Details NO. 3
6. Log of Test Borings No. 1
7. Log of Test Borings No. 2
8. Log of Test Borings No. 3

DESIGN NOTES:

DESIGN
Uniform Building Code, 1997 Edition and the Bridge Design Specifications.

DESIGN WIND LOAD
27 psf

DESIGN SEISMIC LOAD
0.57 Dead load

REINFORCED CONCRETE
f'c = 3.6 ksi
fy = 60 ksi

CONCRETE MASONRY

REGULAR STRENGTH	HIGH STRENGTH	
f'm = 1500 psi	f'm = 2000 psi	f'm = 2500 psi
fb = 495 psi	fb = 660 psi	fb = 830 psi
fs = 24,000 psi	fs = 24,000 psi	fs = 24,000 psi
n = 25.8	n = 19.3	n = 15.5

LEGEND

1. Grade beam
2. MBGR, see "Road Plans"
3. Controller cabinet to be relocated, see "Road Plans"
4. Controller cabinet, see "Road Plans"
5. 8" Ø irrigation line opening
6. Access Gate
7. Power pole to be removed, see "Road Plans"

NOTES

1. For Sections A-A, B-B, C-C, and D-D, see "General Plan No. 2" sheet.
2. For Standard Plans list and Pile Data Table, see "Grade Beam Details No. 1 sheet.

SOUND WALL NO 464 — BR NO 55E0008

QUANTITIES

24" CAST-IN-DRILLED-HOLE CONCRETE PILING	179	LF
MINOR CONCRETE (MINOR STRUCTURE)	41	CY
SOUND WALL (MASONRY BLOCK)	1,385	SQFT
BAR REINFORCING STEEL (SOUND WALL)	6,900	LB
CONCRETE BARRIER (TYPE 736 MODIFIED)	4	LF
CONCRETE BARRIER (TYPE 736SV)	59	LF

Sudhakar Vatti
DESIGN OVERSIGHT Sudhakar Vatti
8-10-09
SIGN OFF DATE

	BY	CHECKED			
DESIGN	V. Trinh	K. Nelson	LOAD AND RESISTANCE FACTOR DESIGN (LRFD)	LIVE LOADING: HL-93 TRUCK, TANDEM AND PERMIT DESIGN LOAD (P15)	
DETAILS	V. Trinh	K. Nelson	LAYOUT	V. Trinh	K. Nelso
QUANTITIES	K. Coates	V. Trinh	SPECIFICATIONS	EL Tyk	PLANS AND SPECS COMPARED V. Trinh

PREPARED FOR THE STATE OF CALIFORNIA DEPARTMENT OF TRANSPORTATION

Vinh Trinh
PROJECT ENGINEER

BRIDGE NO.
POST MILES 23.6

SOUND WALL NO. 464
GENERAL PLAN NO. 1

DESIGN GENERAL PLAN SHEET (ENGLISH) (REV. 2/25/05)

ORIGINAL SCALE IN INCHES FOR REDUCED PLANS 0 1 2 3

CU 12235
EA 071631

DISREGARD PRINTS BEARING EARLIER REVISION DATES

REVISION DATES (PRELIMINARY STAGE ONLY) 02/06/09 04/06/09 7/27/09

SHEET 1 OF 8

FILE => SW464-a-gp01.dgn

USERNAME => trmnguye DATE PLOTTED => 04-FEB-2010 TIME PLOTTED => 11:23

DIST	COUNTY	ROUTE	POST MILES TOTAL PROJECT	SHEET No	TOTAL SHEETS
12	Ora	22,405, 605	R0.3/R0.9, 22.3/24.0,3.0/R1.6	1921	1929

REGISTERED CIVIL ENGINEER 7/27/09 DATE

2-1-10
PLANS APPROVAL DATE

REGISTERED PROFESSIONAL ENGINEER VINH TRINH No. C 50685 Exp. 9-30-09 CIVIL STATE OF CALIFORNIA

The State of California or its officers or agents shall not be responsible for the accuracy or completeness of electronic copies of this plan sheet.

OCTA
550 SOUTH MAIN STREET
ORANGE, CA 92863

WKE, Inc.
400 N. Tustin Ave, Suite 285
Santa Ana, CA 92705

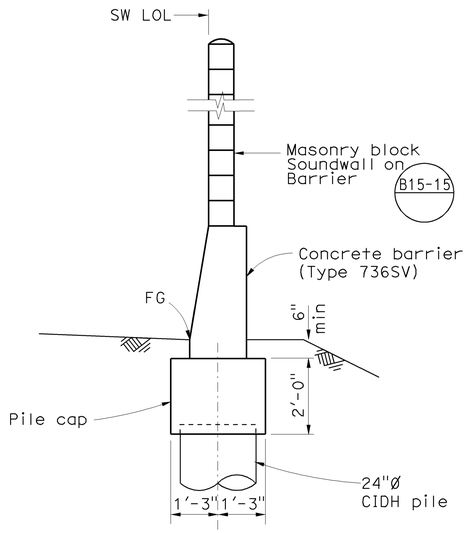

SECTION A-A
½" = 1'-0"

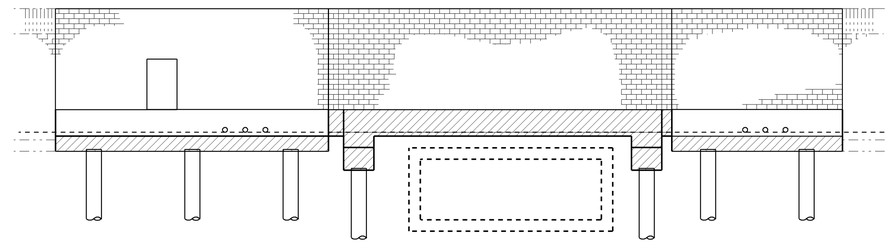

LEGEND
Minor Concrete (Sound Wall)

CONCRETE STRENGTH AND TYPE LIMITS
No Scale

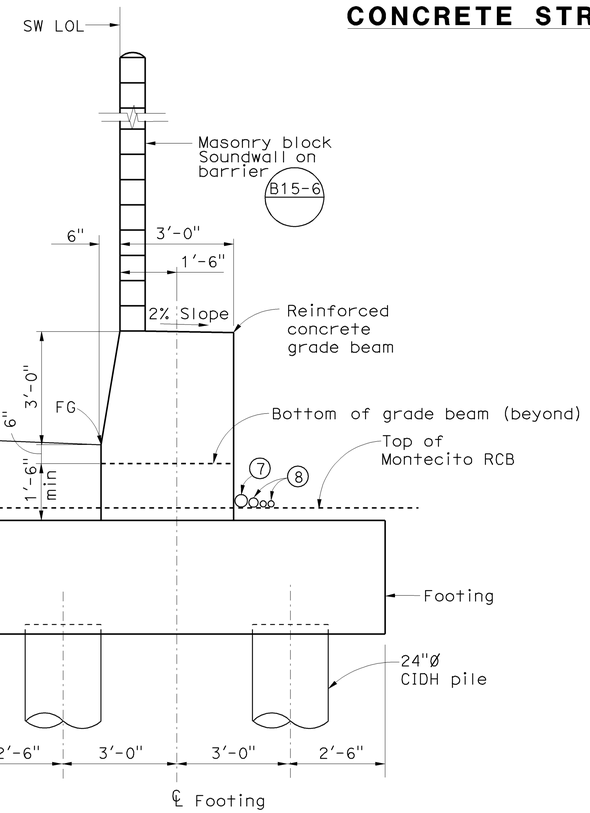

SECTION B-B
½" = 1'-0"

LEGEND
⑦ Irrigation conduit, see "Road Plans"
⑧ Electrical conduit, see "Road Plans"

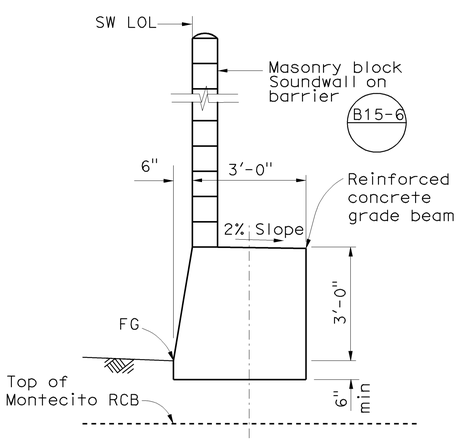

SECTION C-C
½" = 1'-0"

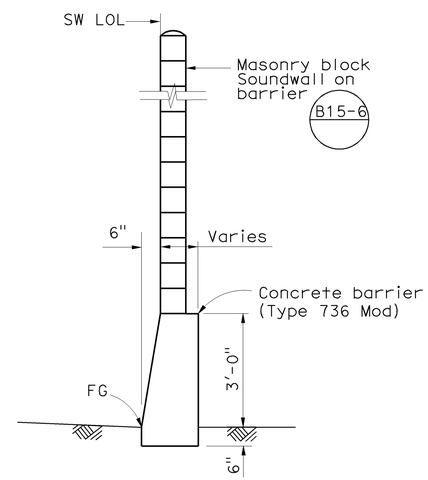

SECTION D-D
½" = 1'-0"

NOTE:
THE CONTRACTOR SHALL VERIFY ALL CONTROLLING FIELD DIMENSIONS BEFORE ORDERING OR FABRICATING ANY MATERIAL.

Sudhakar Vatti
DESIGN OVERSIGHT Sudhakar Vatti
8-10-09
SIGN OFF DATE

	BY	CHECKED				
DESIGN	V. Trinh	K. Nelson	LOAD AND RESISTANCE FACTOR DESIGN (LRFD)	LIVE LOADING: HL-93 TRUCK, TANDEM AND PERMIT DESIGN LOAD (P15)		
DETAILS	V. Trinh	K. Nelson	LAYOUT	V. Trinh	K. Nelso	
QUANTITIES	K. Coates	V. Trinh	SPECIFICATIONS	EL Tyk	PLANS AND SPECS COMPARED V. Trinh	

PREPARED FOR THE STATE OF CALIFORNIA DEPARTMENT OF TRANSPORTATION

Vinh Trinh
PROJECT ENGINEER

BRIDGE NO.
POST MILES 23.6

SOUND WALL NO. 464
GENERAL PLAN NO. 2

DESIGN GENERAL PLAN SHEET (ENGLISH) (REV. 2/25/05)

ORIGINAL SCALE IN INCHES FOR REDUCED PLANS 0 1 2 3

CU 12235
EA 071631

DISREGARD PRINTS BEARING EARLIER REVISION DATES

REVISION DATES (PRELIMINARY STAGE ONLY) 02/04/09 04/06/09 7/27/09

SHEET 2 OF 8

FILE => SW464-a-gp02.dgn

USERNAME => trmnguye DATE PLOTTED => 04-FEB-2010 TIME PLOTTED => 11:23

DIST	COUNTY	ROUTE	POST MILES TOTAL PROJECT	SHEET No	TOTAL SHEETS
12	Ora	22,405, 605	R0.3/R0.9, 22.3/24.0,3.0/R1.6	1922	1929

REGISTERED CIVIL ENGINEER 7/27/09 DATE

2-1-10
PLANS APPROVAL DATE

REGISTERED PROFESSIONAL ENGINEER VINH TRINH No. C 50685 Exp. 9-30-09 CIVIL STATE OF CALIFORNIA

The State of California or its officers or agents shall not be responsible for the accuracy or completeness of electronic copies of this plan sheet.

OCTA
550 SOUTH MAIN STREET
ORANGE, CA 92863

WKE, Inc.
400 N. Tustin Ave, Suite 285
Santa Ana, CA 92705

STANDARD PLANS DATED MAY 2006

A10A	Acronyms and Abbreviations (Sheet 1 of 2)
A10B	Acronyms and Abbreviations (Sheet 2 of 2)
A10C	Symbols (Sheet 1 of 2)
A10D	Symbols (Sheet 2 of 2)
B15-3	Sound Wall Masonry Block on Pile Cap Details (1)
RSP B15-4	Sound Wall Masonry Block on Pile Cap Details (2)
RSP B15-6	Sound Wall Masonry Block on Type 736S/SV Barrier Details
B15-10	Sound Wall Masonry Block on Footing or Pile Cap - 5'-0" Access Gate Details (1)
B15-11	Sound Wall Masonry Block on Footing or Pile Cap - 5'-0" Access Gate Details (2)
B15-14	Sound Wall Masonry Block Access Gate Locking Details
RSP B15-15	Sound Wall Masonry Block on Type 736S/SV Barrier on Pile Footing for Spanning Utilities

LEGEND

7.15 Denotes Bottom of Footing Elevation

Standard Plan Sheet No.

Detail No.

PILE DATA TABLE (24" CIDH CONCRETE PILE)

Location	Nominal Resistance		Design Tip Elevation	Specified Tip Elevation	Nominal Driving Resistance
	Compression	Tension			
Grade Beam Footing	120 kips	0	-17 (a,c) & -13 (d)	-17	n/a

Design tip elevations are controlled by the following demands:
(a) Compression, (b) Tension, (c) Settlement, and (d) Lateral Loads

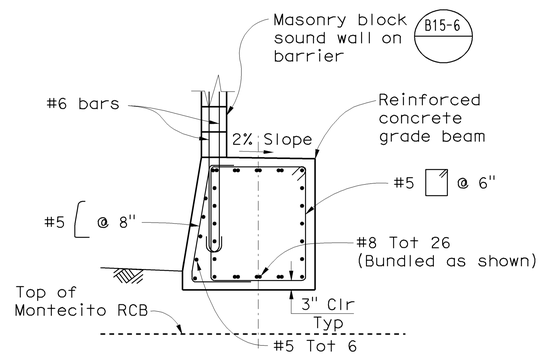

GRADE BEAM
1/2" = 1'-0"

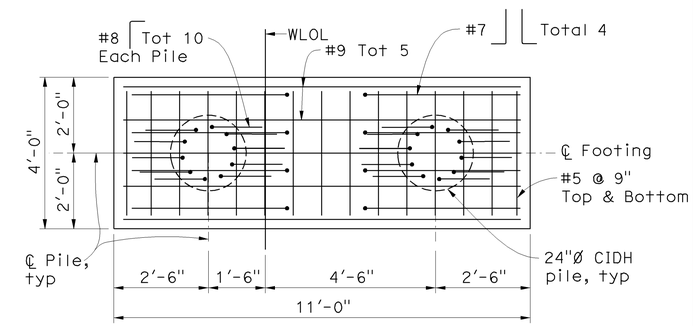

FOOTING PLAN
1/2" = 1'-0"

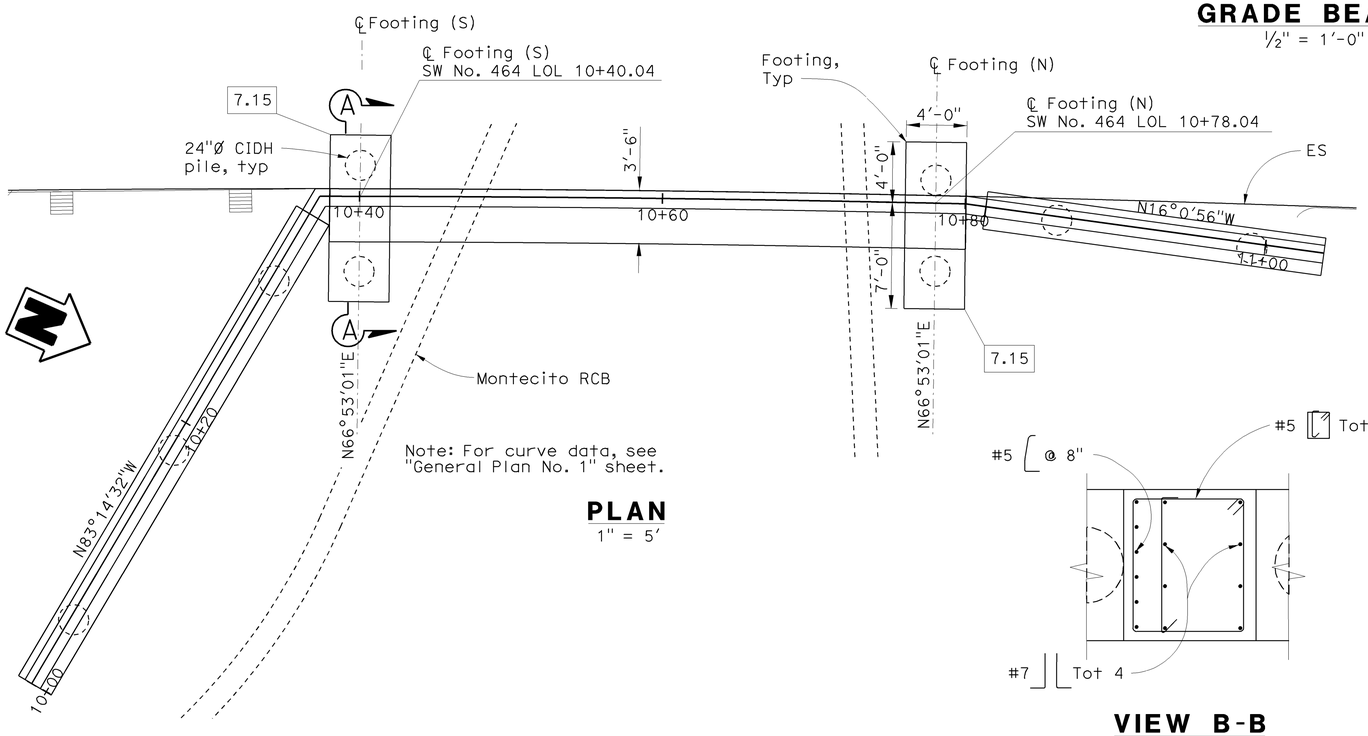

Note: For curve data, see "General Plan No. 1" sheet.

PLAN
1" = 5'

VIEW B-B
1/2" = 1'-0"

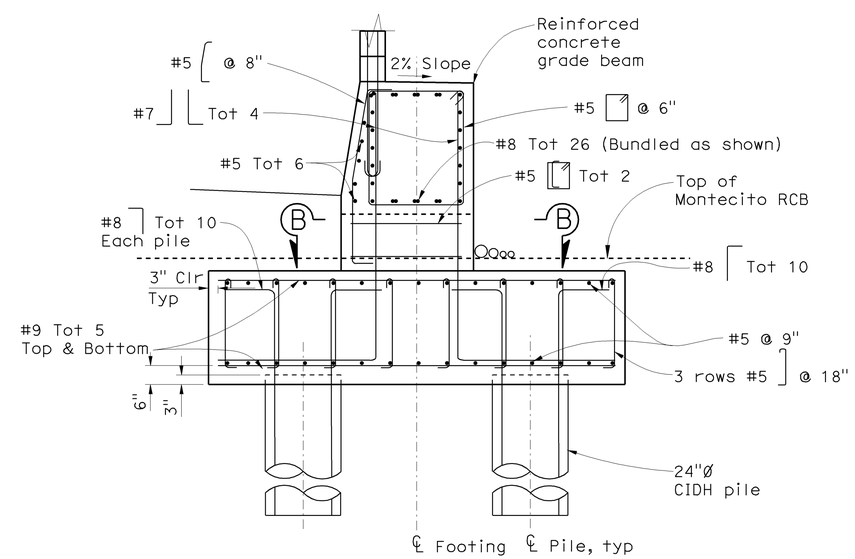

SECTION A-A
1/2" = 1'-0"

NOTE:
THE CONTRACTOR SHALL VERIFY ALL CONTROLLING FIELD DIMENSIONS BEFORE ORDERING OR FABRICATING ANY MATERIAL.

Sudhakar Vatti
DESIGN OVERSIGHT Sudhakar Vatti
8-10-09
SIGN OFF DATE

	BY	CHECKED
DESIGN	V. Trinh	K. Nelson
DETAILS	V. Trinh	K. Nelson
QUANTITIES	K. Coates	V. Trinh

PREPARED FOR THE STATE OF CALIFORNIA DEPARTMENT OF TRANSPORTATION

Vinh Trinh
PROJECT ENGINEER

BRIDGE NO.
POST MILE 23.6

SOUND WALL NO. 464
GRADE BEAM DETAILS NO. 1

DESIGN DETAIL SHEET (ENGLISH) (REV. 2/25/05)

ORIGINAL SCALE IN INCHES FOR REDUCED PLANS 0 1 2 3

CU 12235
EA 071631

DISREGARD PRINTS BEARING EARLIER REVISION DATES

REVISION DATES (PRELIMINARY STAGE ONLY) 04/06/09 7/27/09

SHEET 3 OF 8

FILE => SW464-c-dt01.dgn

USERNAME => trimnguye DATE PLOTTED => 04-FEB-2010 TIME PLOTTED => 11:23

DIST	COUNTY	ROUTE	POST MILES TOTAL PROJECT	SHEET No	TOTAL SHEETS
12	Ora	22,405, 605	R0.3/R0.9, 22.3/24.0,3.0/R1.6	1923	1929

REGISTERED CIVIL ENGINEER 7/27/09 DATE

2-1-10
PLANS APPROVAL DATE

REGISTERED PROFESSIONAL ENGINEER VINH TRINH No. C 50685 Exp. 9-30-09 CIVIL STATE OF CALIFORNIA

The State of California or its officers or agents shall not be responsible for the accuracy or completeness of electronic copies of this plan sheet.

OCTA
550 SOUTH MAIN STREET
ORANGE, CA 92863

WKE, Inc.
400 N. Tustin Ave, Suite 285
Santa Ana, CA 92705

NOTES:

1. Lap splices in spiral reinforcement shall be lapped at least 80 wire diameters. Spiral reinforcement at splices and at ends shall be hooked around a longitudinal bar.

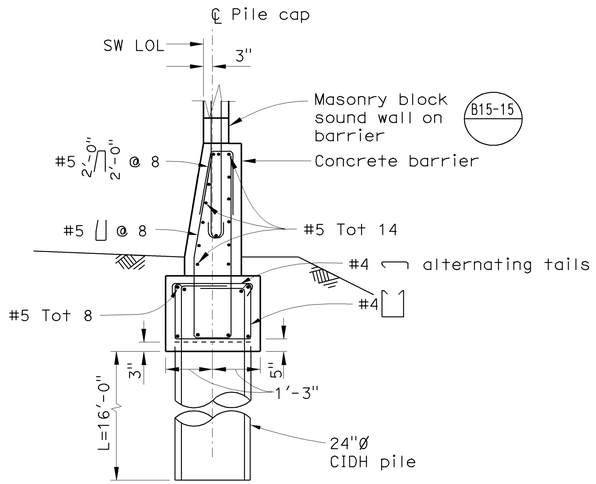

PILE CAP SECTION

½" = 1'-0"

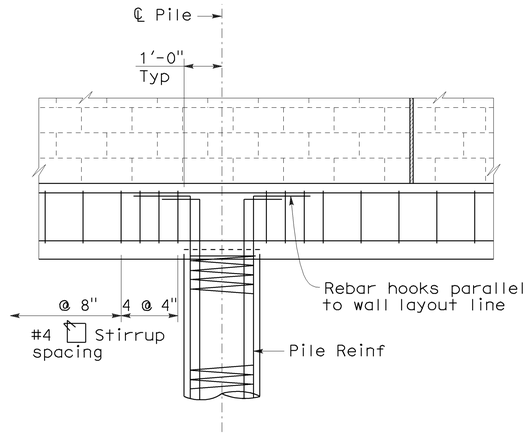

PILE CAP ELEVATION

½" = 1'-0"

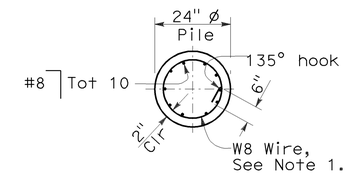

SECTION D-D

½" = 1'-0"

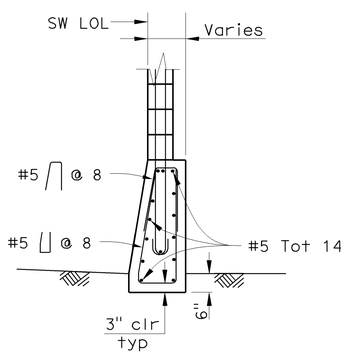

SECTION E-E

½" = 1'-0"

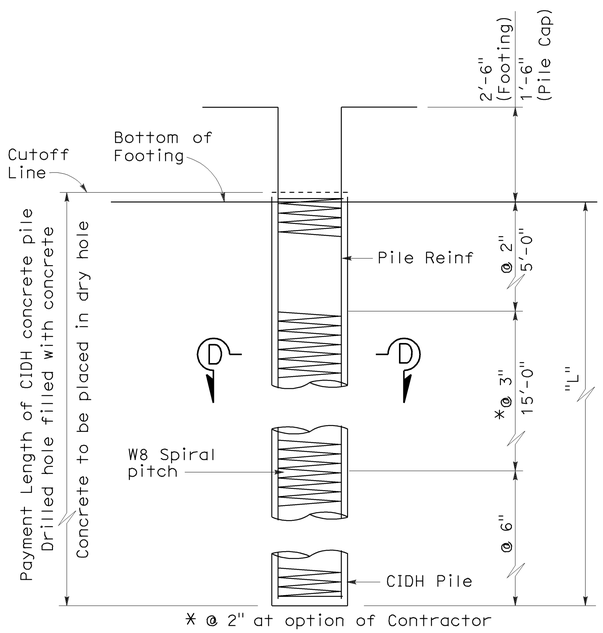

24" DIA CIDH CONCRETE PILE

½" = 1'-0"

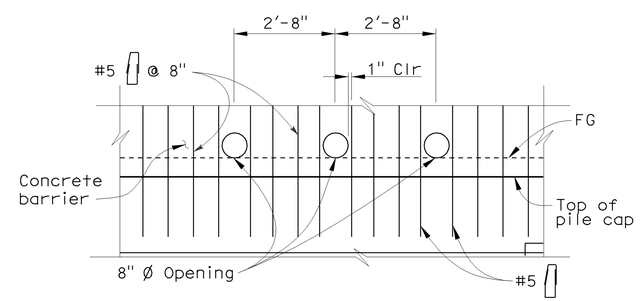

IRRIGATION LINE OPENINGS

½" = 1'-0"

NOTE:
THE CONTRACTOR SHALL VERIFY ALL CONTROLLING FIELD DIMENSIONS BEFORE ORDERING OR FABRICATING ANY MATERIAL.

Sudhakar Vatti
DESIGN OVERSIGHT Sudhakar Vatti
8-10-09
SIGN OFF DATE

	BY	CHECKED
DESIGN	V. Trinh	K. Nelson
DETAILS	V. Trinh	K. Nelson
QUANTITIES	K. Coates	V. Trinh

PREPARED FOR THE STATE OF CALIFORNIA DEPARTMENT OF TRANSPORTATION

Vinh Trinh
PROJECT ENGINEER

BRIDGE NO.
POST MILE 23.6

SOUND WALL NO. 464
GRADE BEAM DETAILS NO. 2

DESIGN DETAIL SHEET (ENGLISH) (REV. 2/25/05)

ORIGINAL SCALE IN INCHES FOR REDUCED PLANS 0 1 2 3

CU 12235
EA 071631

DISREGARD PRINTS BEARING EARLIER REVISION DATES → 04/06/09 7/27/09

REVISION DATES (PRELIMINARY STAGE ONLY)

SHEET 4 OF 8

FILE => SW464-c-dt02.dgn

USERNAME => trmngoye DATE PLOTTED => 04-FEB-2010 TIME PLOTTED => 11:23

DIST	COUNTY	ROUTE	POST MILES TOTAL PROJECT	SHEET No	TOTAL SHEETS
12	Ora	22,405, 605	R0.3/R0.9, 22.3/24.0,3.0/R1.6	1924	1929

REGISTERED CIVIL ENGINEER 7/27/09 DATE

2-1-10
PLANS APPROVAL DATE

The State of California or its officers or agents shall not be responsible for the accuracy or completeness of electronic copies of this plan sheet.

REGISTERED PROFESSIONAL ENGINEER VINH TRINH No. C 50685 Exp. 9-30-09 CIVIL STATE OF CALIFORNIA

OCTA
550 SOUTH MAIN STREET
ORANGE, CA 92863

WKE, Inc.
400 N. Tustin Ave, Suite 285
Santa Ana, CA 92705

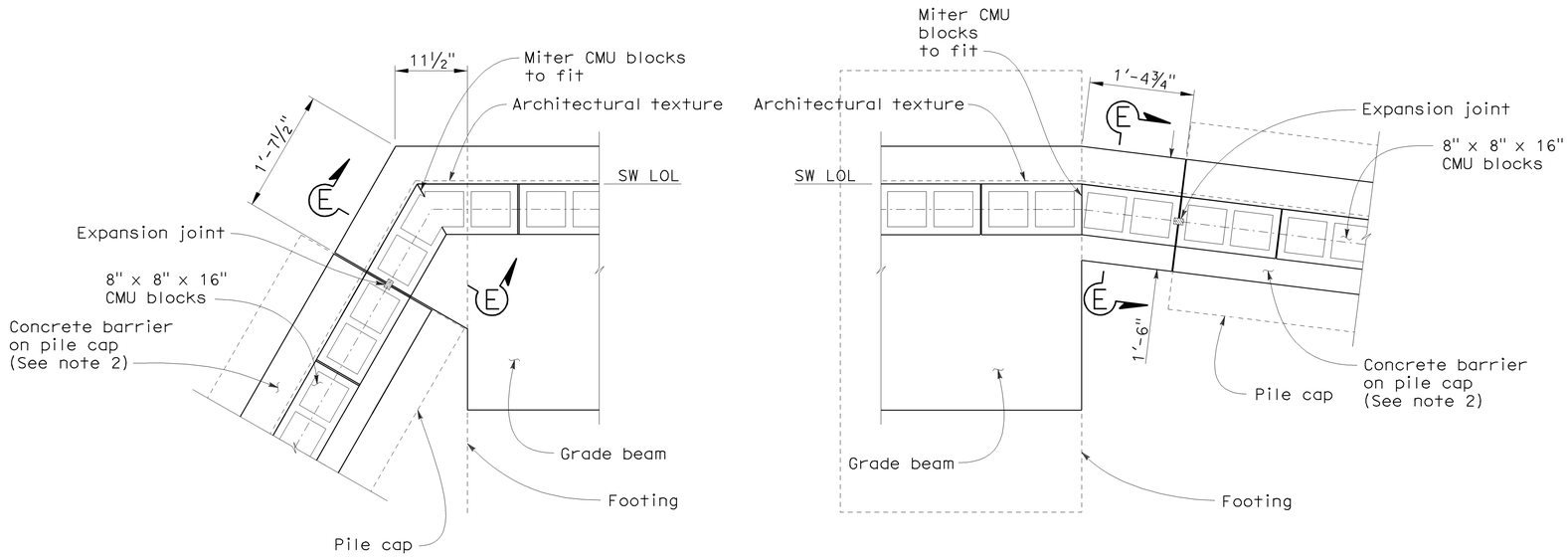

CMU CORNER DETAIL

1" = 1'-0"

NOTES:

1. For Section E-E, see "Grade Beam Details No. 2" sheet.
2. For section details, see "Grade Beam Details No. 2" sheet.

LEGEND:

Indicates bundled bars

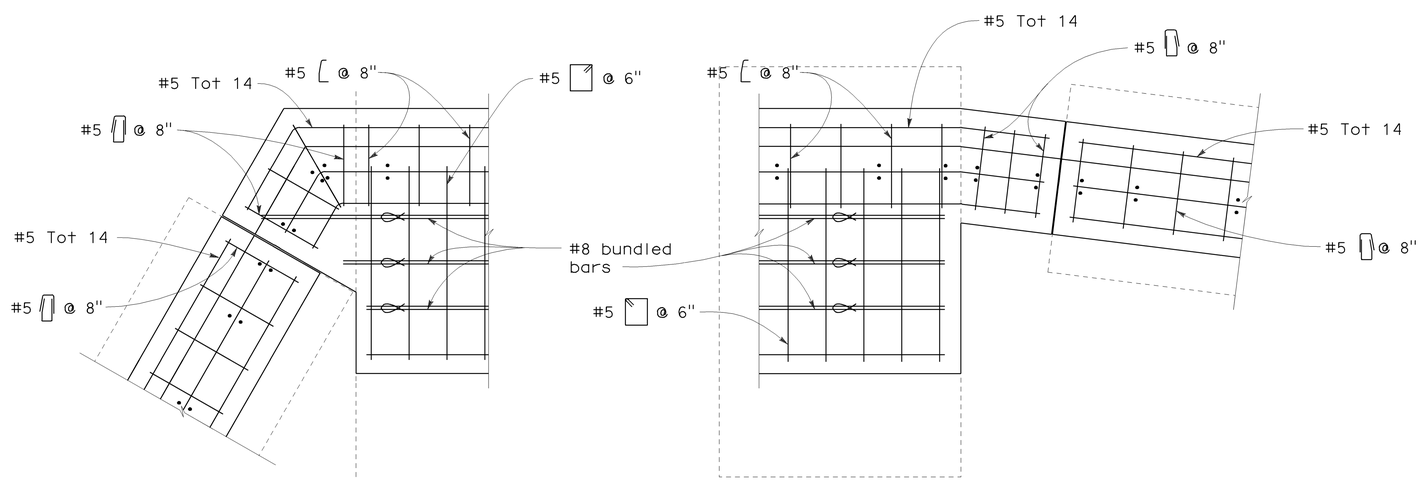

CMU CORNER REINFORCEMENT DETAIL

1" = 1'-0"

NOTE:
THE CONTRACTOR SHALL VERIFY ALL CONTROLLING FIELD DIMENSIONS BEFORE ORDERING OR FABRICATING ANY MATERIAL.

Sudhakar Vatti
DESIGN OVERSIGHT Sudhakar Vatti
8-10-09
SIGN OFF DATE

	BY	CHECKED
DESIGN	V. Trinh	K. Nelson
DETAILS	V. Trinh	K. Nelson
QUANTITIES	K. Coates	V. Trinh

PREPARED FOR THE STATE OF CALIFORNIA DEPARTMENT OF TRANSPORTATION

Vinh Trinh
PROJECT ENGINEER

BRIDGE NO.
POST MILE 23.6

SOUND WALL NO. 464
GRADE BEAM DETAILS NO. 3

DESIGN DETAIL SHEET (ENGLISH) (REV. 2/25/05)

ORIGINAL SCALE IN INCHES FOR REDUCED PLANS 0 1 2 3

CU 12235
EA 071631

DISREGARD PRINTS BEARING EARLIER REVISION DATES

REVISION DATES (PRELIMINARY STAGE ONLY) 04/06/09 7/27/09

SHEET 5 OF 8

FILE => SW464-c-dt03.dgn

USERNAME => trmnguye DATE PLOTTED => 04-FEB-2010 TIME PLOTTED => 11:24

REFERENCE: CALTRANS SOIL & ROCK LOGGING, CLASSIFICATION, AND PRESENTATION MANUAL (JUNE 2007)

DIST	COUNTY	ROUTE	POST MILES TOTAL PROJECT	SHEET No	TOTAL SHEETS
12	Ora	22,405, 605	R0.3/R0.9, 22.3/24.0,3.0/R1.6	1925	1929

REGISTERED CIVIL ENGINEER 07/27/09 DATE

2-1-10
PLANS APPROVAL DATE

REGISTERED PROFESSIONAL ENGINEER K.Arulmoli No. GE 2090 Exp.12-31-09 GEOTECHNICAL STATE OF CALIFORNIA

The State of California or its officers or agents shall not be responsible for the accuracy or completeness of electronic copies of this plan sheet.

OCTA
550 SOUTH MAIN STREET
ORANGE, CA 92863

EARTH MECHANICS, INC.
17660, NEWHOPE STREET, SUITE E
FOUNTAIN VALLEY, CA 92708

CEMENTATION

Description	Criteria
Weak	Crumbles or breaks with handling or little finger pressure.
Moderate	Crumbles or breaks with considerable finger pressure.
Strong	Will not crumble or break with finger pressure.

CONSISTENCY OF COHESIVE SOILS

Description	Unconfined Compressive Strength (tsf)	Pocket Penetrometer Measurement (tsf)	Torvane Measurement (tsf)	Field Approximation
Very Soft	< 0.25	< 0.25	< 0.12	Easily penetrated several inches by fist
Soft	0.25 to 0.50	0.25 to 0.50	0.12 to 0.25	Easily penetrated several inches by thumb
Medium Stiff	0.50 to 1.0	0.50 to 1.0	0.25 to 0.50	Penetrated several inches by thumb with moderate effort
Stiff	1 to 2	1 to 2	0.50 to 1.0	Readily indented by thumb but penetrated only with great effort
Very Stiff	2 to 4	2 to 4	1.0 to 2.0	Readily indented by thumbnail
Hard	> 4.0	> 4.0	> 2.0	Indented by thumbnail with difficulty

BOREHOLE IDENTIFICATION

Symbol	Hole Type	Description
Size	A	Auger Boring
Size	R P	Rotary drilled boring Rotary percussion boring (air)
Size	R	Rotary drilled diamond core
Size	HD HA	Hand driven (1-inch soil tube) Hand Auger
●	D	Dynamic Cone Penetration Boring
▲	CPT	Cone Penetration Test (ASTM D 5778-95)
□	O	Other

Note: Size in inches.

PLASTICITY OF FINE-GRAINED SOILS

Description	Criteria
Nonplastic	A 1/8-inch thread cannot be rolled at any water content.
Low	The thread can barely be rolled and the lump cannot be formed when drier than the plastic limit.
Medium	The thread is easy to roll and not much time is required to reach the plastic limit. The thread cannot be rerolled after reaching the plastic limit. The lump crumbles when drier than the plastic limit.
High	It takes considerable time rolling and kneading to reach the plastic limit. The thread can be rerolled several times after reaching the plastic limit. The lump can be formed without crumbling when drier than the plastic limit.

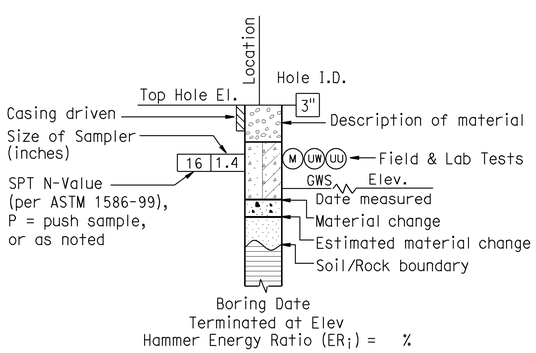

ROTARY BORING

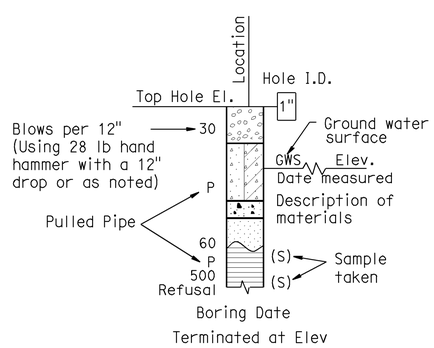

HAND BORING

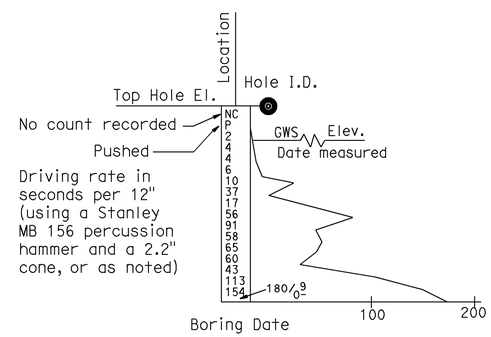

DYNAMIC CONE PENETRATION BORING

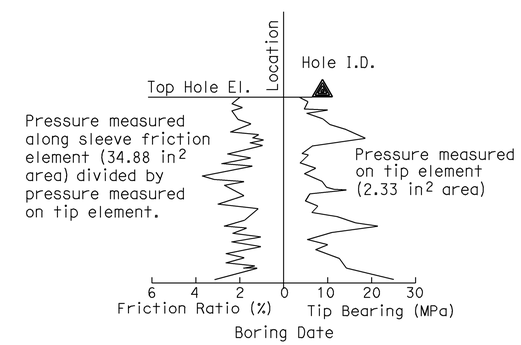

CONE PENETRATION TEST (CPT) SOUNDING

Sudhakar Vatti
DESIGN OVERSIGHT Sudhakar Vatti
8-10-09
SIGN OFF DATE

DRAWN BY: J.Fang
CHECKED BY: G.J.Gunaranjan

FIELD INVESTIGATION BY: R.Jie

PREPARED FOR THE STATE OF CALIFORNIA DEPARTMENT OF TRANSPORTATION

K.Arulmoli
PROJECT ENGINEER

BRIDGE NO.
POST MILE 23.6

SOUND WALL NO 464
LOG OF TEST BORINGS NO. 1

OSF CIVIL LOG OF TEST BORINGS SHEET (ENGLISH) (REV. 2-25-05)

ORIGINAL SCALE IN INCHES FOR REDUCED PLANS 0 1 2 3

CU 12235
EA 071631

DISREGARD PRINTS BEARING EARLIER REVISION DATES

REVISION DATES (PRELIMINARY STAGE ONLY) 03/23/09 04/06/09 07/21/09

SHEET 6 OF 8

FILE => SW464-z-ltb01.dgn

USERNAME => ttmnguye DATE PLOTTED => 04-FEB-2010 TIME PLOTTED => 11:24

REFERENCE: CALTRANS SOIL & ROCK LOGGING, CLASSIFICATION, AND PRESENTATION MANUAL (JUNE 2007)

GROUP SYMBOLS AND NAMES

Graphic/Symbol	Group Names
GW	Well-graded GRAVEL Well-graded GRAVEL with SAND
GP	Poorly graded GRAVEL Poorly graded GRAVEL with SAND
GW-GM	Well-graded GRAVEL with SILT Well-graded GRAVEL with SILT and SAND
GW-GC	Well-graded GRAVEL with CLAY (or SILTY CLAY) Well-graded GRAVEL with CLAY and SAND (or SILTY CLAY and SAND)
GP-GM	Poorly graded GRAVEL with SILT Poorly graded GRAVEL with SILT and SAND
GP-GC	Poorly graded GRAVEL with CLAY (or SILTY CLAY) Poorly graded GRAVEL with CLAY and SAND (or SILTY CLAY and SAND)
GM	SILTY GRAVEL SILTY GRAVEL with SAND
GC	CLAYEY GRAVEL CLAYEY GRAVEL with SAND
GC-GM	SILTY, CLAYEY GRAVEL SILTY, CLAYEY GRAVEL with SAND
SW	Well-graded SAND Well-graded SAND with GRAVEL
SP	Poorly graded SAND Poorly graded SAND with GRAVEL
SW-SM	Well-graded SAND with SILT Well-graded SAND with SILT and GRAVEL
SW-SC	Well-graded SAND with CLAY (or SILTY CLAY) Well-graded SAND with CLAY and GRAVEL (or SILTY CLAY and GRAVEL)
SP-SM	Poorly graded SAND with SILT Poorly graded SAND with SILT and GRAVEL
SP-SC	Poorly graded SAND with CLAY (or SILTY CLAY) Poorly graded SAND with CLAY and GRAVEL (or SILTY CLAY and GRAVEL)
SM	SILTY SAND SILTY SAND with GRAVEL
SC	CLAYEY SAND CLAYEY SAND with GRAVEL
SC-SM	SILTY, CLAYEY SAND SILTY, CLAYEY SAND with GRAVEL
PT	PEAT
	COBBLES COBBLES and BOULDERS BOULDERS

Graphic/Symbol	Group Names
CL	Lean CLAY Lean CLAY with SAND Lean CLAY with GRAVEL SANDY lean CLAY SANDY lean CLAY with GRAVEL GRAVELLY lean CLAY GRAVELLY lean CLAY with SAND
CL-ML	SILTY CLAY SILTY CLAY with SAND SILTY CLAY with GRAVEL SANDY SILTY CLAY SANDY SILTY CLAY with GRAVEL GRAVELLY SILTY CLAY GRAVELLY SILTY CLAY with SAND
ML	SILT SILT with SAND SILT with GRAVEL SANDY SILT SANDY SILT with GRAVEL GRAVELLY SILT GRAVELLY SILT with SAND
OL	ORGANIC lean CLAY ORGANIC lean CLAY with SAND ORGANIC lean CLAY with GRAVEL SANDY ORGANIC lean CLAY SANDY ORGANIC lean CLAY with GRAVEL GRAVELLY ORGANIC lean CLAY GRAVELLY ORGANIC lean CLAY with SAND
OL	ORGANIC SILT ORGANIC SILT with SAND ORGANIC SILT with GRAVEL SANDY ORGANIC SILT SANDY ORGANIC SILT with GRAVEL GRAVELLY ORGANIC SILT GRAVELLY ORGANIC SILT with SAND
CH	Fat CLAY Fat CLAY with SAND Fat CLAY with GRAVEL SANDY fat CLAY SANDY fat CLAY with GRAVEL GRAVELLY fat CLAY GRAVELLY fat CLAY with SAND
MH	Elastic SILT Elastic SILT with SAND Elastic SILT with GRAVEL SANDY elastic SILT SANDY elastic SILT with GRAVEL GRAVELLY elastic SILT GRAVELLY elastic SILT with SAND
OH	ORGANIC fat CLAY ORGANIC fat CLAY with SAND ORGANIC fat CLAY with GRAVEL SANDY ORGANIC fat CLAY SANDY ORGANIC fat CLAY with GRAVEL GRAVELLY ORGANIC fat CLAY GRAVELLY ORGANIC fat CLAY with SAND
OH	ORGANIC elastic SILT ORGANIC elastic SILT with SAND ORGANIC elastic SILT with GRAVEL SANDY ORGANIC elastic SILT SANDY ORGANIC elastic SILT with GRAVEL GRAVELLY ORGANIC elastic SILT GRAVELLY ORGANIC elastic SILT with SAND
OL/OH	ORGANIC SOIL ORGANIC SOIL with SAND ORGANIC SOIL with GRAVEL SANDY ORGANIC SOIL SANDY ORGANIC SOIL with GRAVEL GRAVELLY ORGANIC SOIL GRAVELLY ORGANIC SOIL with SAND

FIELD AND LABORATORY TESTING

- (C) Consolidation (ASTM D 2435)
- (CL) Collapse Potential (ASTM D 5333)
- (CP) Compaction Curve (CTM 216)
- (CR) Corrosivity Testing (CTM 643, CTM 422, CTM 417)
- (CU) Consolidated Undrained Triaxial (ASTM D 4767)
- (DS) Direct Shear (ASTM D 3080)
- (EI) Expansion Index (ASTM D 4829)
- (M) Moisture Content (ASTM D 2216)
- (OC) Organic Content-% (ASTM D 2974)
- (P) Permeability (CTM 220)
- (PA) Particle Size Analysis (ASTM D 422)
- (PI) Plasticity Index (AASHTO T 90) Liquid Limit (AASHTO T 89)
- (PL) Point Load Index (ASTM D 5731)
- (PM) Pressure Meter
- (PP) Pocket Penetrometer
- (R) R-Value (CTM 301)
- (SE) Sand Equivalent (CTM 217)
- (SG) Specific Gravity (AASHTO T 100)
- (SL) Shrinkage Limit (ASTM D 427)
- (SW) Swell Potential (ASTM D 4546)
- (TV) Pocket Torvane
- (UC) Unconfined Compression-Soil (ASTM D 2166) Unconfined Compression-Rock (ASTM D 2938)
- (UU) Unconsolidated Undrained Triaxial (ASTM D 2850)
- (UW) Unit Weight (ASTM D 4767)
- (VS) Vane Shear (AASHTO T 223)

DIST	COUNTY	ROUTE	POST MILES TOTAL PROJECT	SHEET No	TOTAL SHEETS
12	Ora	22,405, 605	R0.3/R0.9, 22.3/24.0,3.0/R1.6	1926	1929

REGISTERED CIVIL ENGINEER 07/27/09 DATE

2-1-10
PLANS APPROVAL DATE

REGISTERED PROFESSIONAL ENGINEER K.Arulmoli No. GE 2090 Exp.12-31-09 GEOTECHNICAL STATE OF CALIFORNIA

The State of California or its officers or agents shall not be responsible for the accuracy or completeness of electronic copies of this plan sheet.

OCTA
550 SOUTH MAIN STREET
ORANGE, CA 92863

EARTH MECHANICS, INC.
17660, NEWHOPE STREET, SUITE E
FOUNTAIN VALLEY, CA 92708

APPARENT DENSITY OF COHESIONLESS SOILS

Description	SPT N_{60} (Blows / 12 inches)
Very loose	0 - 4
Loose	5 - 10
Medium Dense	11 - 30
Dense	31 - 50
Very Dense	> 50

MOISTURE

Description	Criteria
Dry	Absence of moisture, dusty, dry to the touch
Moist	Damp but no visible water
Wet	Visible free water, usually soil is below water table

PERCENT OR PROPORTION OF SOILS

Description	Criteria
Trace	Particles are present but estimated to be less than 5%
Few	5 to 10%
Little	15 to 25%
Some	30 to 45%
Mostly	50 to 100%

PARTICLE SIZE

Description		Size
Boulder		> 12"
Cobble		3" to 12"
Gravel	Coarse	3/4" to 3"
	Fine	No. 4 to 3/4"
Sand	Coarse	No. 10 to No. 4
	Medium	No. 40 to No. 10
	Fine	No. 200 to No. 40

Sudhakar Vatti
DESIGN OVERSIGHT Sudhakar Vatti

8-10-09
SIGN OFF DATE

DRAWN BY: J.Fang

CHECKED BY: G.J.Gunaranjan

FIELD INVESTIGATION BY: R.Jie

PREPARED FOR THE STATE OF CALIFORNIA DEPARTMENT OF TRANSPORTATION

K.Arulmoli
PROJECT ENGINEER

BRIDGE NO.

POST MILE 23.6

SOUND WALL NO 464

LOG OF TEST BORINGS NO. 2

OSF CIVIL LOG OF TEST BORINGS SHEET (ENGLISH) (REV. 2-25-05)

ORIGINAL SCALE IN INCHES FOR REDUCED PLANS 0 1 2 3

CU 12235
EA 071631

DISREGARD PRINTS BEARING EARLIER REVISION DATES

REVISION DATES (PRELIMINARY STAGE ONLY) 03/25/09 04/06/09 07/27/09

SHEET 7 OF 8

FILE => SW464-z-ltb02.dgn

USERNAME => trimmguye DATE PLOTTED => 04-FEB-2010 TIME PLOTTED => 11:24

DIST	COUNTY	ROUTE	POST MILES TOTAL PROJECT	SHEET No	TOTAL SHEETS
12	Ora	22,405, 605	R0.3/R0.9, 22.3/24.0,3.0/R1.6	1927	1929

REGISTERED CIVIL ENGINEER 07/27/09 DATE

2-1-10
PLANS APPROVAL DATE

REGISTERED PROFESSIONAL ENGINEER K.Arulmoli No. GE 2090 Exp.12-31-09 GEOTECHNICAL STATE OF CALIFORNIA

The State of California or its officers or agents shall not be responsible for the accuracy or completeness of electronic copies of this plan sheet.

OCTA
550 SOUTH MAIN STREET
ORANGE, CA 92863

EARTH MECHANICS, INC.
17660, NEWHOPE STREET, SUITE E
FOUNTAIN VALLEY, CA 92708

BENCHMARKS:

Monument: 1A-144-04

Described by OCS 2005 - Found 3.75" OCS aluminum benchmark disk stamped "1A-144-04", set in the southwesterly corner of a 4.4 ft by 4.4 ft concrete catch basin. Monument is located in the northeasterly corner of the intersection of Seal Beach Boulevard and St. Cloud Drive, 44 ft easterly of the centerline of Seal Beach Boulevard and 58 ft northerly of the centerline of St. Cloud Dr. Monument is set level with the sidewalk.

Elevation: 15.37 feet

NOTES:

(1) This LOTB sheet (Boring Record) was prepared in accordance with the Caltrans Soil and Rock Classification Logging, Classification and Presentation Manual (June 2007).

(2) 2.4" samples were taken using a California Modified Sampler.

(3) A rope and cat-head hammer system consisting of a hammer weight of 140 lbs falling a distance of 30" was used to advance the drive sampler.

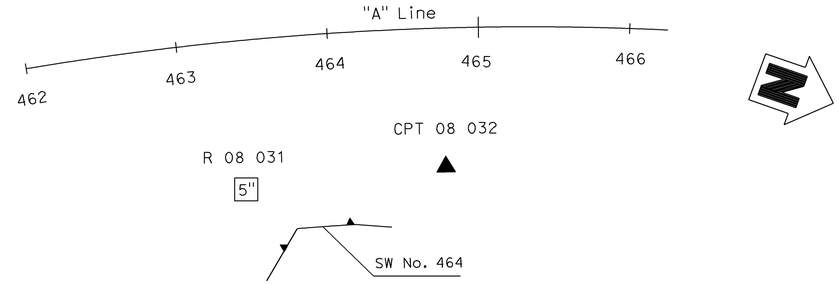

PLAN
1" = 50'

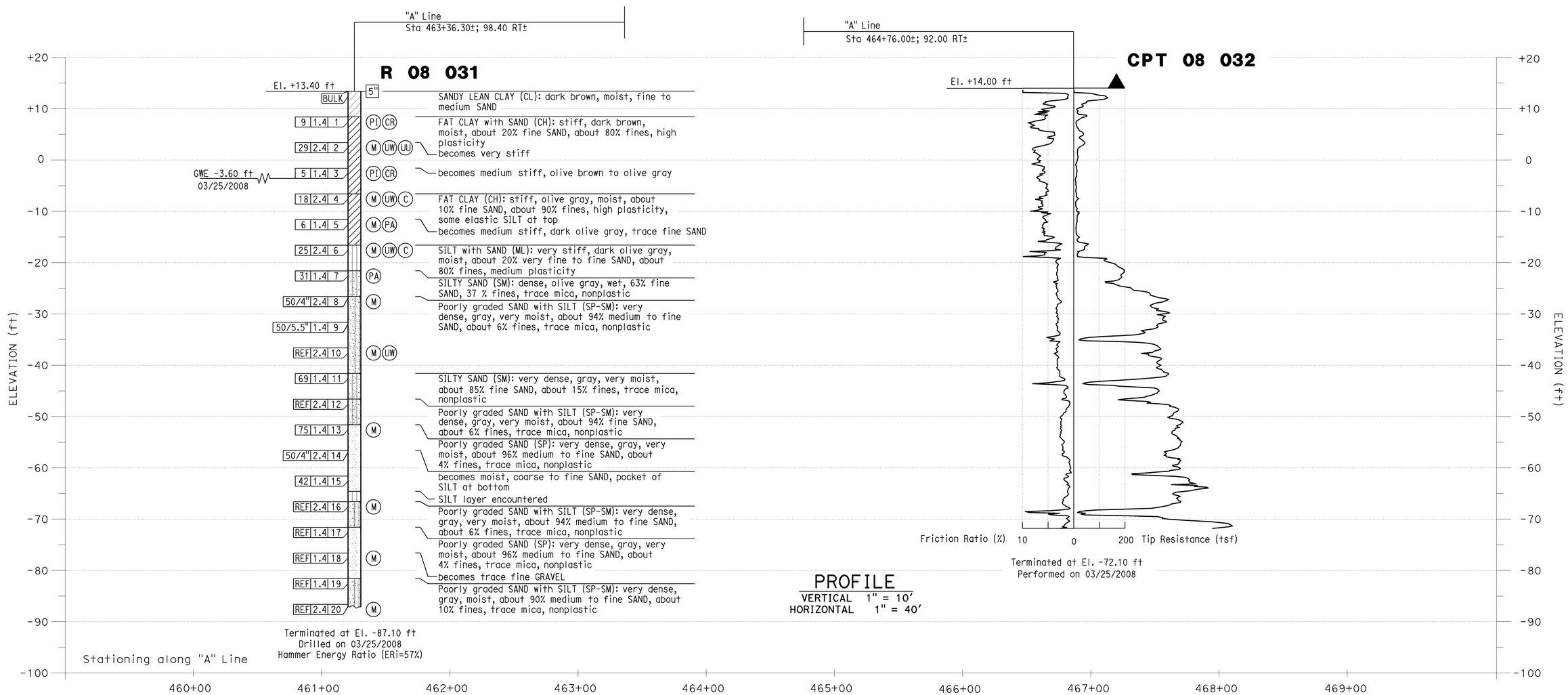

PROFILE
VERTICAL 1" = 10'
HORIZONTAL 1" = 40'

Sudhakar Vatti DESIGN OVERSIGHT Sudhakar Vatti 8-10-09 SIGN OFF DATE	J.Fang DRAWN BY: G.J.Gunaranjan CHECKED BY:	FIELD INVESTIGATION BY: R.Jie	PREPARED FOR THE STATE OF CALIFORNIA DEPARTMENT OF TRANSPORTATION	K.Arulmoli PROJECT ENGINEER	BRIDGE NO. POST MILE 23.6	SOUND WALL NO 464 LOG OF TEST BORINGS NO. 3

OSF CIVIL LOG OF TEST BORINGS SHEET (ENGLISH) (REV. 2-25-05)

ORIGINAL SCALE IN INCHES FOR REDUCED PLANS 0 1 2 3

CU 12235
EA 071631

DISREGARD PRINTS BEARING EARLIER REVISION DATES

REVISION DATES (PRELIMINARY STAGE ONLY) 03/25/09 04/06/09 07/21/09

SHEET 8 OF 8

FILE => SW464-z-ltb03.dgn

USERNAME => trmnguye DATE PLOTTED => 04-FEB-2010 TIME PLOTTED => 11:24

DIST	COUNTY	ROUTE	POST MILES TOTAL PROJECT	SHEET No	TOTAL SHEETS
12	Ora	22,405, 605	R0.3/R0.9, 22.3/24.0,3.0/R1.6	1928	1929

REGISTERED CIVIL ENGINEER — DATE 7/27/09

2-1-10
PLANS APPROVAL DATE

REGISTERED PROFESSIONAL ENGINEER — VINH TRINH — No. C 50685 — Exp. 9-30-09 — CIVIL — STATE OF CALIFORNIA

The State of California or its officers or agents shall not be responsible for the accuracy or completeness of electronic copies of this plan sheet.

OCTA
550 SOUTH MAIN STREET
ORANGE, CA 92863

WKE, INC.
400 N. TUSTIN AVE, SUITE 285
SANTA ANA, CA 92705

INDEX TO PLANS

1. Grade Beam Layout
2. Grade Beam Details

DESIGN NOTES:

DESIGN
Uniform Building Code, 1997 Edition
and the Bridge Design Specifications.

DESIGN WIND LOAD
27 psf

DESIGN SEISMIC LOAD
0.57 Dead load

REINFORCED CONCRETE
f'c = 3.6 ksi
fy = 60 ksi

CONCRETE MASONRY

REGULAR STRENGTH	HIGH STRENGTH	
f'm = 1500 psi	f'm = 2000 psi	f'm = 2500 psi
fb = 495 psi	fb = 660 psi	fb = 830 psi
fs = 24,000 psi	fs = 24,000 psi	fs = 24,000 psi
n = 25.8	n = 19.3	n = 15.5

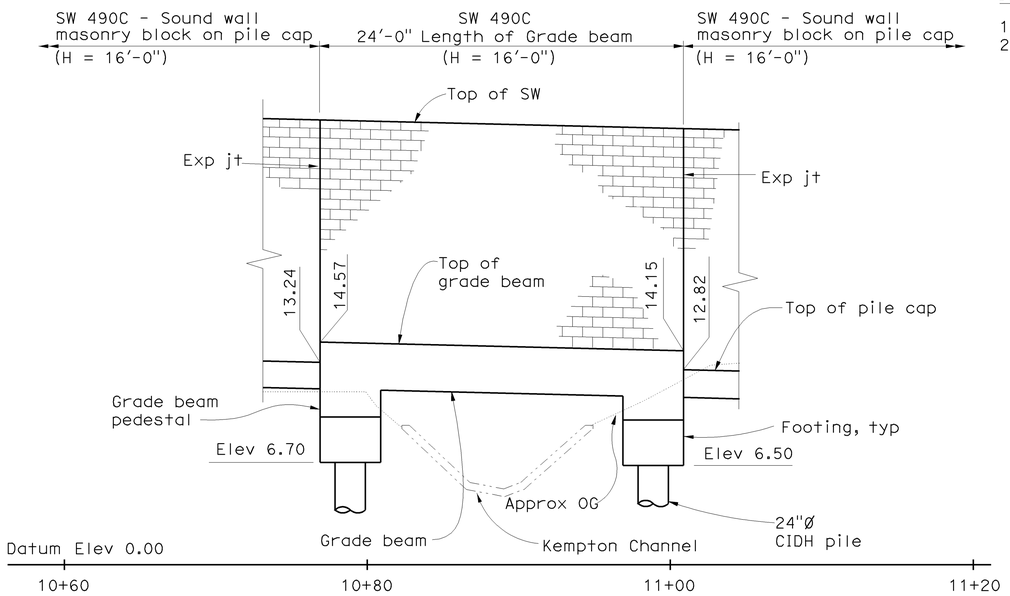

ELEVATION
1" = 5'

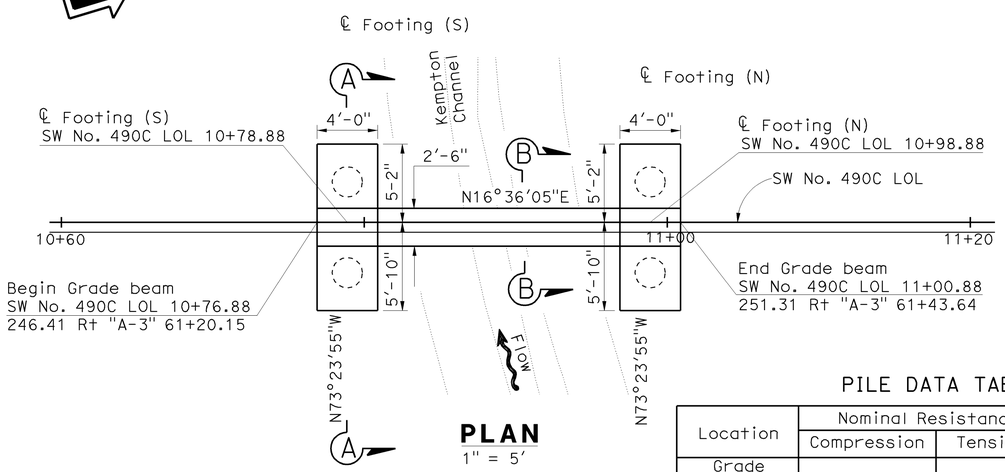

PLAN
1" = 5'

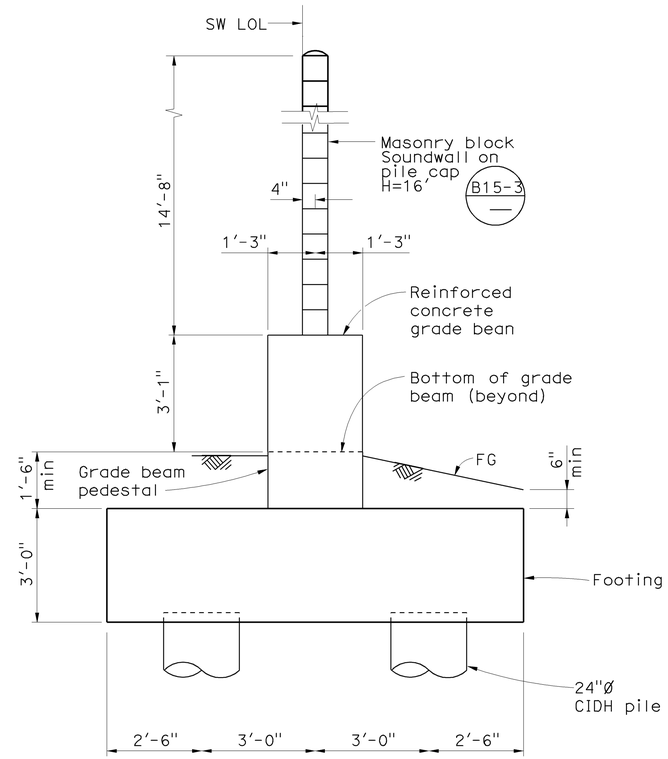

SECTION A-A
½" = 1'-0"

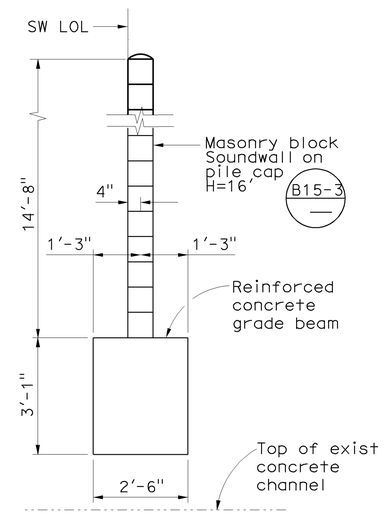

SECTION B-B
½" = 1'-0"

PILE DATA TABLE (24" CIDH CONCRETE PILE)

Location	Nominal Resistance		Design Tip Elevation	Specified Tip Elevation	Nominal Driving Resistance
	Compression	Tension			
Grade Beam Footing (S)	90 kips	10 kips	-15(a), +5(b) -15(c), & -13(d)	-15	n/a
Grade Beam Footing (N)	90 kips	10 kips	-15(a), +5(b) -15(c), & -13(d)	-15	n/a

Design tip elevations are controlled by the following demands:
(a) Compression, (b) Tension, (c) Settlement, and (d) Lateral Loads

SOUND WALL NO 490C — BR NO 55E0009

QUANTITIES

24" CAST-IN-DRILLED-HOLE CONCRETE PILING	84	LF
MINOR CONCRETE (MINOR STRUCTURE)	18	CY
SOUND WALL (MASONRY BLOCK)	352	SQFT
BAR REINFORCING STEEL (SOUND WALL)	5,000	LB

NOTE:
THE CONTRACTOR SHALL VERIFY ALL CONTROLLING FIELD DIMENSIONS BEFORE ORDERING OR FABRICATING ANY MATERIAL.

SW-27

Sudhakar Vatti
DESIGN OVERSIGHT — Sudhakar Vatti
8-10-09
SIGN OFF DATE

	BY	CHECKED
DESIGN	V. Trinh	S. Nagi
DETAILS	V. Trinh	S. Nagi
QUANTITIES	K. Coates	V. Trinh

LOAD AND RESISTANCE FACTOR DESIGN (LRFD) — LIVE LOADING: HL-93 TRUCK, TANDEM AND PERMIT DESIGN LOAD (P15)
LAYOUT — BY V. Trinh — CHECKED S. Nagi
SPECIFICATIONS — BY EL Tyk — PLANS AND SPECS COMPARED V. Trinh

PREPARED FOR THE STATE OF CALIFORNIA DEPARTMENT OF TRANSPORTATION

Vinh Trinh
PROJECT ENGINEER

BRIDGE NO.
POST MILES 3.5

SOUND WALL NO. 490C
GRADE BEAM LAYOUT

DESIGN GENERAL PLAN SHEET (ENGLISH) (REV. 2/25/05)

ORIGINAL SCALE IN INCHES FOR REDUCED PLANS 0 1 2 3

CU 12235
EA 071631

DISREGARD PRINTS BEARING EARLIER REVISION DATES
REVISION DATES (PRELIMINARY STAGE ONLY) 02/16/09 04/06/09 7/27/09

SHEET 1 OF 2

FILE => SW490C-a-gp01.dgn

USERNAME => trmnguye DATE PLOTTED => 04-FEB-2010 TIME PLOTTED => 11:24

DIST	COUNTY	ROUTE	POST MILES TOTAL PROJECT	SHEET No	TOTAL SHEETS
12	Ora	22,405, 605	R0.3/R0.9, 22.3/24.0,3.0/R1.6	1929	1929

REGISTERED CIVIL ENGINEER 7/27/09 DATE

2-1-10
PLANS APPROVAL DATE

REGISTERED PROFESSIONAL ENGINEER VINH TRINH No. C 50685 Exp. 9-30-09 CIVIL STATE OF CALIFORNIA

The State of California or its officers or agents shall not be responsible for the accuracy or completeness of electronic copies of this plan sheet.

OCTA
550 SOUTH MAIN STREET
ORANGE, CA 92863

WKE, Inc.
400 N. Tustin Ave, Suite 285
Santa Ana, CA 92705

STANDARD PLANS DATED MAY 2006

A10A	Acronyms and Abbreviations (Sheet 1 of 2)
A10B	Acronyms and Abbreviations (Sheet 2 of 2)
A10C	Symbols (Sheet 1 of 2)
A10D	Symbols (Sheet 2 of 2)
B15-3	Sound Wall Masonry Block on Pile Cap Details (1)
B15-4	Sound Wall Masonry Block on Pile Cap Details (2)
B15-5	Sound Wall Masonry Block on Pile Cap Details (3)

Standard Plan Sheet No.

Detail No.

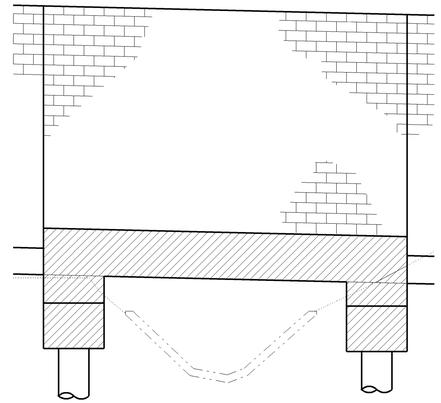

LEGEND

Minor Concrete (Sound Wall)

CONCRETE STRENGTH AND TYPE LIMITS

No Scale

NOTES:

1. Lap splices in spiral reinforcement shall be lapped at least 80 wire diameters. Spiral reinforcement at splices and at ends shall be hooked around a longitudinal bar.

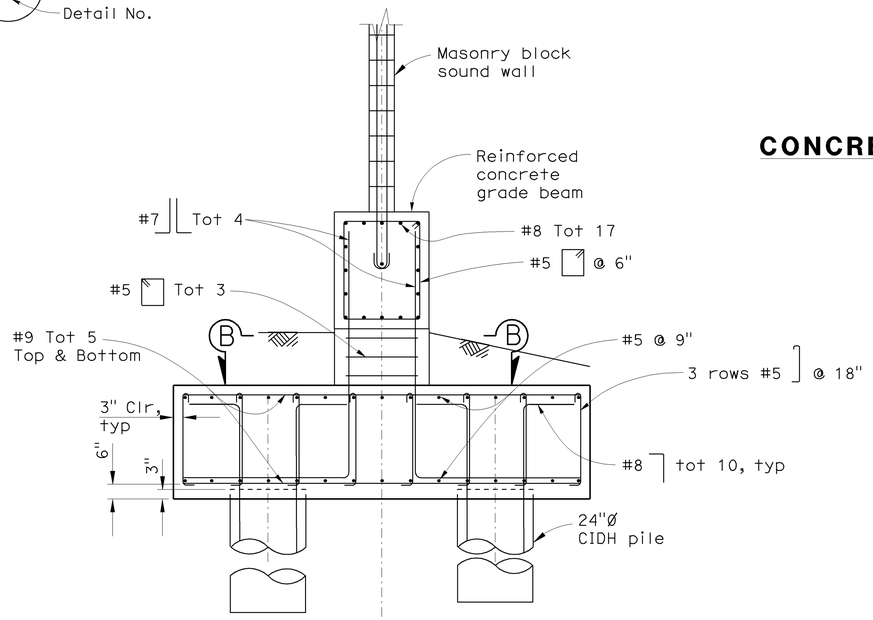

FOOTING DETAILS

½" = 1'-0"

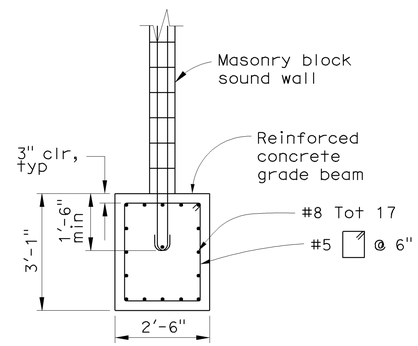

GRADE BEAM DETAILS

½" = 1'-0"

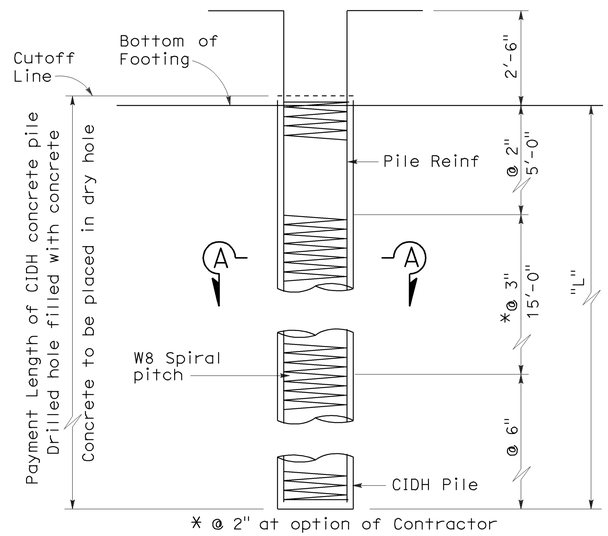

24" DIA CIDH CONCRETE PILE

½" = 1'-0"

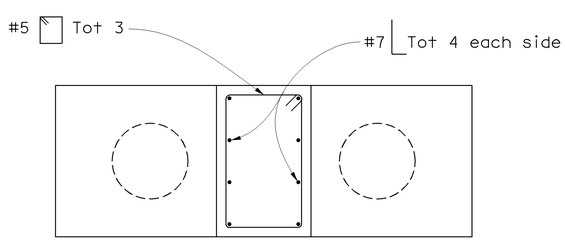

SECTION B-B

½" = 1'-0"

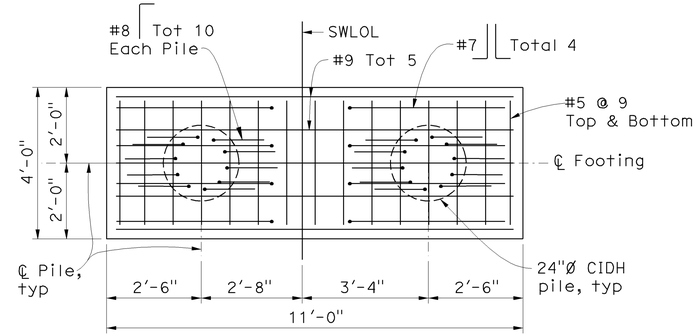

FOOTING PLAN

½" = 1'-0"

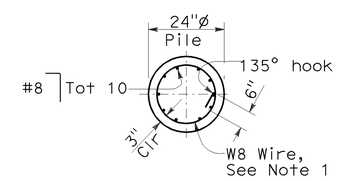

SECTION A-A

½" = 1'-0"

NOTE:
THE CONTRACTOR SHALL VERIFY ALL CONTROLLING FIELD DIMENSIONS BEFORE ORDERING OR FABRICATING ANY MATERIAL.

SW-28

Sudhakar Vatti
DESIGN OVERSIGHT Sudhakar Vatti
8-10-09
SIGN OFF DATE

	BY	CHECKED
DESIGN	V. Trinh	S. Nagi
DETAILS	V. Trinh	S. Nagi
QUANTITIES	K. Coates	V. Trinh

PREPARED FOR THE STATE OF CALIFORNIA DEPARTMENT OF TRANSPORTATION

Vinh Trinh
PROJECT ENGINEER

BRIDGE NO.
POST MILE 3.5

SOUND WALL NO. 490C
GRADE BEAM DETAILS

DESIGN DETAIL SHEET (ENGLISH) (REV. 2/25/05)

ORIGINAL SCALE IN INCHES FOR REDUCED PLANS 0 1 2 3

CU 12235
EA 071631

DISREGARD PRINTS BEARING EARLIER REVISION DATES

REVISION DATES (PRELIMINARY STAGE ONLY) 04/06/09 7/27/09

SHEET 2 OF 2

FILE => SW490C-c-dt01.dgn

USERNAME => trmnguye DATE PLOTTED => 04-FEB-2010 TIME PLOTTED => 11:24