NOTE:
FOR ACCURATE RIGHT OF WAY AND ACCESS DATA,
CONTACT RIGHT OF WAY ENGINEERING AT THE DISTRICT OFFICE.

Dist	COUNTY	ROUTE	POST MILES TOTAL PROJECT	SHEET No.	TOTAL SHEETS
12	Ora	57	16.2/18.6	101	960

REGISTERED CIVIL ENGINEER — DATE 7/15/09

RICHARD LUCERA No. 58089 Exp. 6/30/10 CIVIL — REGISTERED PROFESSIONAL ENGINEER — STATE OF CALIFORNIA

12-14-09
PLANS APPROVAL DATE

THE STATE OF CALIFORNIA OR ITS OFFICERS OR AGENTS SHALL NOT BE RESPONSIBLE FOR THE ACCURACY OR COMPLETENESS OF SCANNED COPIES OF THIS PLAN SHEET.

RBF CONSULTING
14275 ALTON PKWY
IRVINE, CA 92618

OCTA
550 S. MAIN STREET
ORANGE, CA 92863

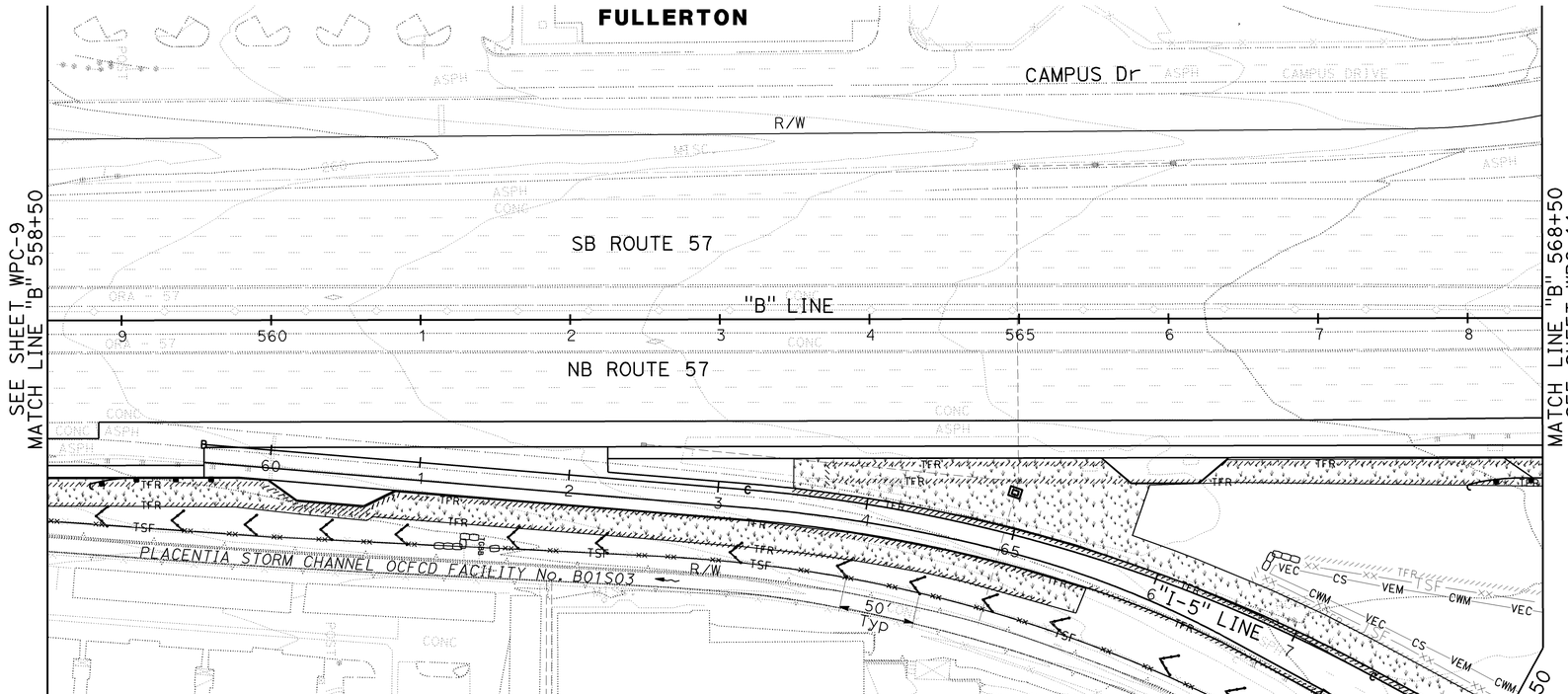

TEMPORARY WATER POLLUTION CONTROL PLAN

SCALE: 1" = 50'

WPC-10

THIS PLAN ACCURATE FOR TEMPORARY WATER POLLUTION CONTROL WORK ONLY.

LAST REVISION | DATE PLOTTED => 16-DEC-2009
08-01-08 | TIME PLOTTED => 08:20

H:\PDATA\10105878\CADD\Strmwater\Div\Merged CADD Files\c0F031gb010.dgn trstrk 16-DEC-2009 08:20

		REVISED BY	
		DATE REVISED	
CALCULATED-DESIGNED BY			
CHECKED BY	SCOTT CARTWRIGHT		
	RICHARD LUCERA		

STATE OF CALIFORNIA - DEPARTMENT OF TRANSPORTATION
CONSULTANT FUNCTIONAL SUPERVISOR
RICHARD LUCERA

BORDER LAST REVISED 4/11/2008

RELATIVE BORDER SCALE IS IN INCHES 0 1 2 3

USERNAME => trstrk
DGN FILE => c0F031gb010.dgn

CU 12220

EA 0F0311

NOTE:
FOR ACCURATE RIGHT OF WAY AND ACCESS DATA,
CONTACT RIGHT OF WAY ENGINEERING AT THE DISTRICT OFFICE.

Dist	COUNTY	ROUTE	POST MILES TOTAL PROJECT	SHEET No.	TOTAL SHEETS
12	Ora	57	16.2/18.6	102	960

REGISTERED CIVIL ENGINEER — 7/15/09 DATE

RICHARD LUCERA No. 58089 Exp. 6/30/10 CIVIL — REGISTERED PROFESSIONAL ENGINEER — STATE OF CALIFORNIA

12-14-09
PLANS APPROVAL DATE

THE STATE OF CALIFORNIA OR ITS OFFICERS OR AGENTS SHALL NOT BE RESPONSIBLE FOR THE ACCURACY OR COMPLETENESS OF SCANNED COPIES OF THIS PLAN SHEET.

RBF CONSULTING
14275 ALTON PKWY
IRVINE, CA 92618

OCTA
550 S. MAIN STREET
ORANGE, CA 92863

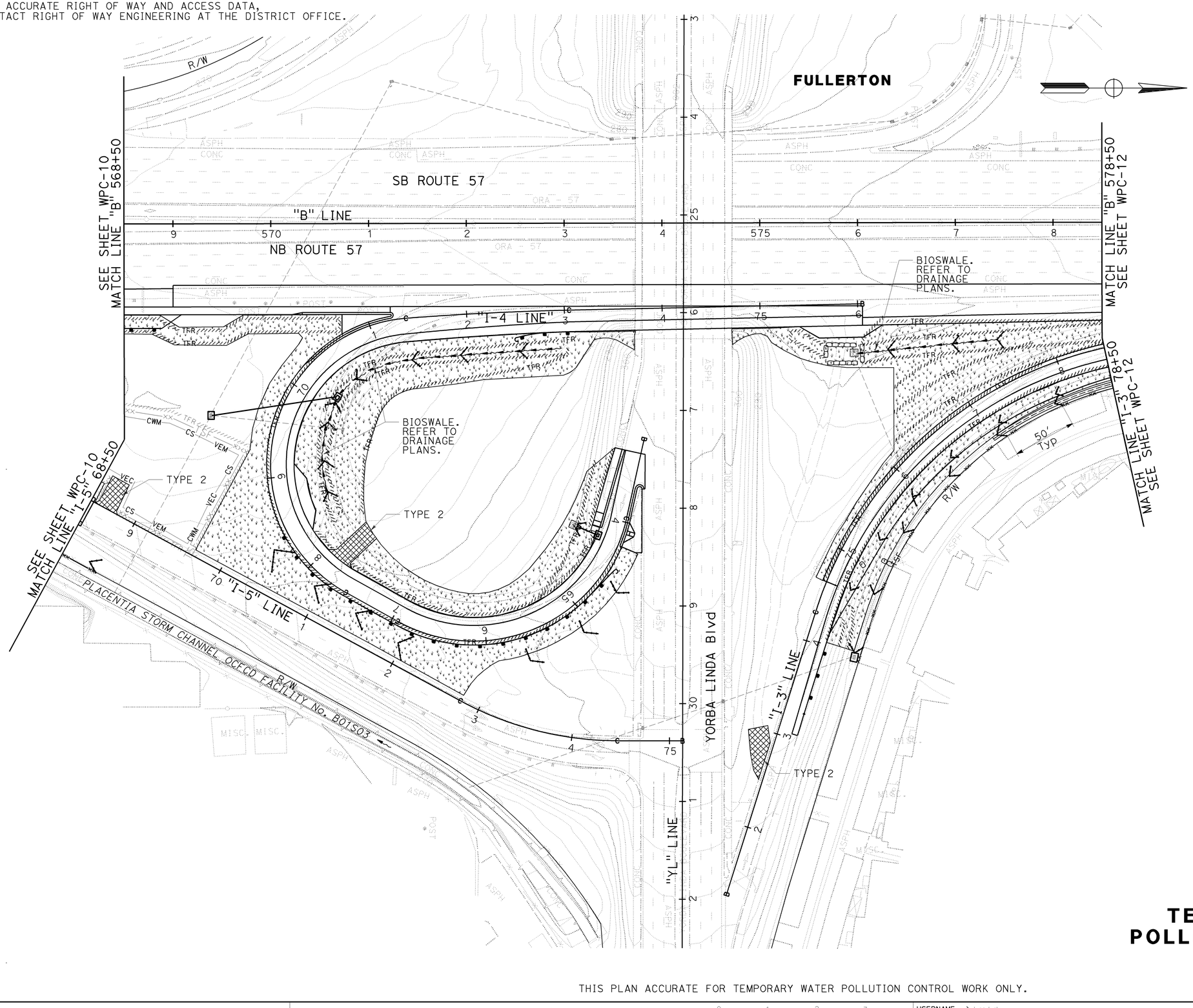

TEMPORARY WATER POLLUTION CONTROL PLAN

SCALE: 1" = 50'

WPC-11

THIS PLAN ACCURATE FOR TEMPORARY WATER POLLUTION CONTROL WORK ONLY.

CALCULATED-DESIGNED BY	SCOTT CARTWRIGHT	REVISED BY	
CHECKED BY	RICHARD LUCERA	DATE REVISED	
CONSULTANT FUNCTIONAL SUPERVISOR	RICHARD LUCERA		

STATE OF CALIFORNIA - DEPARTMENT OF TRANSPORTATION
Caltrans

LAST REVISION — DATE PLOTTED => 16-DEC-2009 — TIME PLOTTED => 08:20
08-01-08

H:\PDATA\10105878\CADD\Strmwater\Div\Merged CADD Files\c0F031gb011.dgn trstrk 16-DEC-2009 08:20

BORDER LAST REVISED 4/11/2008 | RELATIVE BORDER SCALE IS IN INCHES 0 1 2 3 | USERNAME => trstrk | DGN FILE => c0F031gb011.dgn | CU 12220 | EA 0F0311

NOTE:
FOR ACCURATE RIGHT OF WAY AND ACCESS DATA,
CONTACT RIGHT OF WAY ENGINEERING AT THE DISTRICT OFFICE.

Dist	COUNTY	ROUTE	POST MILES TOTAL PROJECT	SHEET No.	TOTAL SHEETS
12	Ora	57	16.2/18.6	103	960

REGISTERED CIVIL ENGINEER — DATE 7/15/09

RICHARD LUCERA No. 58089 Exp. 6/30/10 CIVIL — REGISTERED PROFESSIONAL ENGINEER — STATE OF CALIFORNIA

12-14-09
PLANS APPROVAL DATE

THE STATE OF CALIFORNIA OR ITS OFFICERS OR AGENTS SHALL NOT BE RESPONSIBLE FOR THE ACCURACY OR COMPLETENESS OF SCANNED COPIES OF THIS PLAN SHEET.

RBF CONSULTING
14275 ALTON PKWY
IRVINE, CA 92618

OCTA
550 S. MAIN STREET
ORANGE, CA 92863

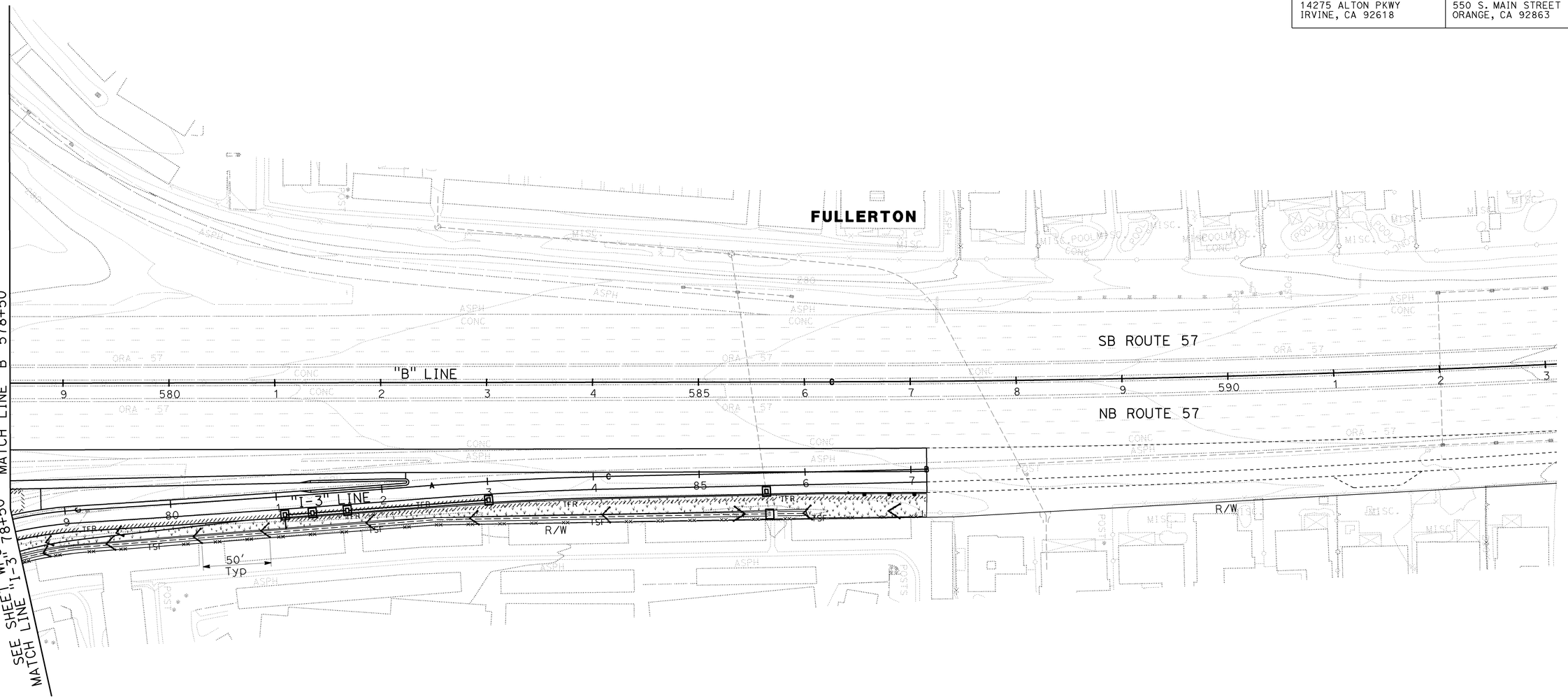

TEMPORARY WATER POLLUTION CONTROL PLAN

SCALE: 1" = 50'

WPC-12

THIS PLAN ACCURATE FOR TEMPORARY WATER POLLUTION CONTROL WORK ONLY.

H:\PDATA\10105878\CADD\Strmwater\Div\Merged CADD Files\c0F031gb012.dgn
STATE OF CALIFORNIA - DEPARTMENT OF TRANSPORTATION
CONSULTANT FUNCTIONAL SUPERVISOR: RICHARD LUCERA
CALCULATED-DESIGNED BY: SCOTT CARTWRIGHT
CHECKED BY: RICHARD LUCERA
REVISED BY | DATE REVISED
trstrk 16-DEC-2009 08:21
LAST REVISION | DATE PLOTTED => 16-DEC-2009 | TIME PLOTTED => 08:21
08-01-08

BORDER LAST REVISED 4/11/2008 | RELATIVE BORDER SCALE IS IN INCHES 0 1 2 3 | USERNAME => trstrk | DGN FILE => c0F031gb012.dgn | CU 12220 | EA 0F0311

Dist	COUNTY	ROUTE	POST MILES TOTAL PROJECT	SHEET No.	TOTAL SHEETS
12	Ora	57	16.2/18.6	104	960

LICENSED LANDSCAPE ARCHITECT

12-14-09
PLANS APPROVAL DATE

THE STATE OF CALIFORNIA OR ITS OFFICERS OR AGENTS SHALL NOT BE RESPONSIBLE FOR THE ACCURACY OR COMPLETENESS OF SCANNED COPIES OF THIS PLAN SHEET.

LICENSED LANDSCAPE ARCHITECT
CATHY L. JOHNSON
No. 4545
Signature
01-31-10
Renewal Date
07-15-09
Date
STATE OF CALIFORNIA

RBF CONSULTING
14725 ALTON PKWY
IRVINE, CA 92618

ORANGE COUNTY
TRANSPORTATION AUTHORITY
550 SOUTH MAIN STREET
ORANGE, CA 92863

NOTE:

FOR ACCURATE RIGHT OF WAY AND ACCESS DATA,
CONTACT RIGHT OF WAY ENGINEERING AT THE DISTRICT OFFICE.

LEGEND:

- EROSION CONTROL (HYDROSEED) TYPE 2 - GENERAL
- EROSION CONTROL (HYDROSEED) TYPE 1 - BMP
- MAINTAIN Exist TREE
- MAINTAIN Exist PLANTED AREAS - 16,000 SQYD TOTAL

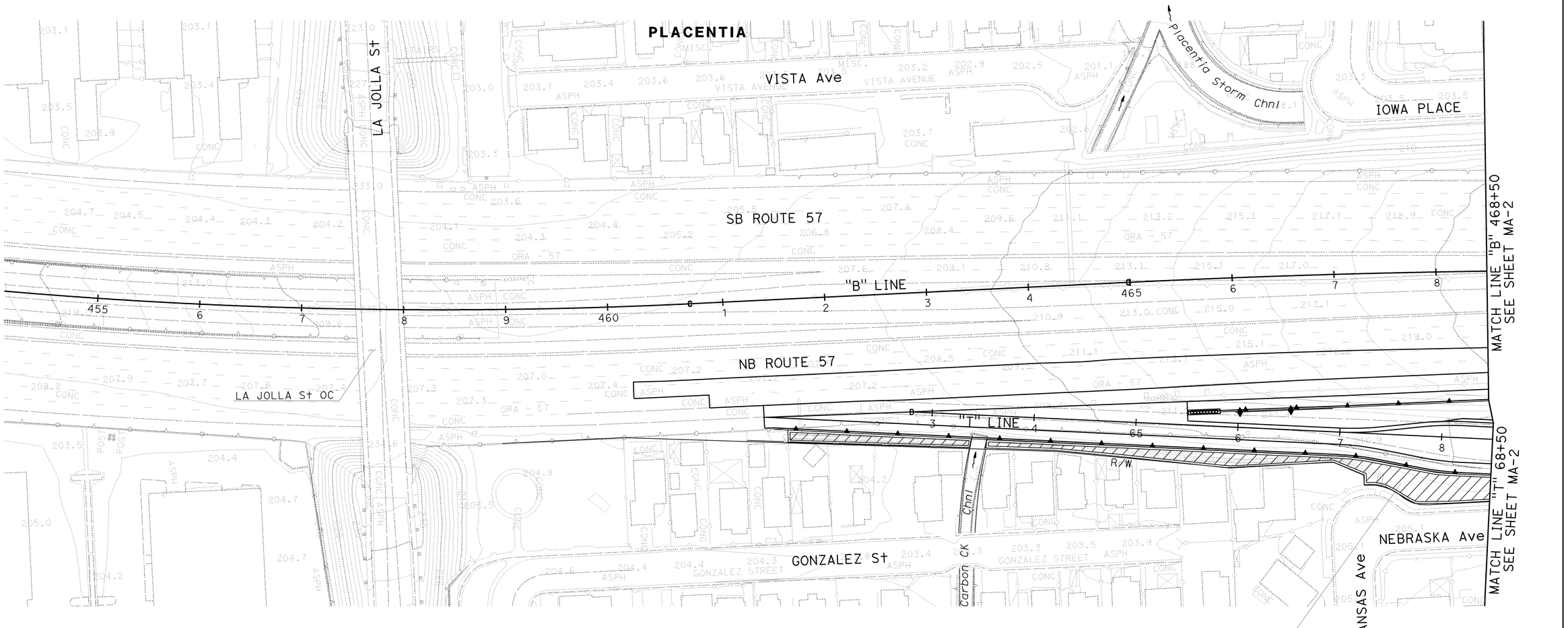

MAINTAIN EXISTING PLANTS AND EROSION CONTROL PLAN

SCALE 1" = 50'

MA-1

THIS PLAN ACCURATE FOR MAINTAIN EXISTING PLANTS AND EROSION CONTROL ONLY.

STATE OF CALIFORNIA - DEPARTMENT OF TRANSPORTATION
Caltrans
CONSULTANT SENIOR LANDSCAPE ARCHITECT: JOHN P. ANDREW
CALCULATED-DESIGNED BY: NIKI WU
CHECKED BY: CATHY L. JOHNSON
REVISED BY
DATE REVISED

H:\pdata\10105878\Admin\submittals\2009-07-15 FINAL Electronic-Only Submittal\DGN-stmk IPLOT Files 2009-07-15 FINAL SUBMITTAL\c0F031th001.dgn

LAST REVISION 00-00-00
DATE PLOTTED => 16-DEC-2009
TIME PLOTTED => 08:27

BORDER LAST REVISED 4/11/2008
RELATIVE BORDER SCALE IS IN INCHES 0 1 2 3
USERNAME => trstrk
DGN FILE => c0F031th001.dgn
CU 12220
EA 0F0311

NOTE:

FOR ACCURATE RIGHT OF WAY AND ACCESS DATA,
CONTACT RIGHT OF WAY ENGINEERING AT THE DISTRICT OFFICE.

Dist	COUNTY	ROUTE	POST MILES TOTAL PROJECT	SHEET No.	TOTAL SHEETS
12	Ora	57	16.2/18.6	105	960

LICENSED LANDSCAPE ARCHITECT

12-14-09
PLANS APPROVAL DATE

THE STATE OF CALIFORNIA OR ITS OFFICERS OR AGENTS SHALL NOT BE RESPONSIBLE FOR THE ACCURACY OR COMPLETENESS OF SCANNED COPIES OF THIS PLAN SHEET.

LICENSED LANDSCAPE ARCHITECT
CATHY L. JOHNSON
No. 4545
Signature
01-31-10
Renewal Date
07-15-09
Date
STATE OF CALIFORNIA

RBF CONSULTING
14725 ALTON PKWY
IRVINE, CA 92618

ORANGE COUNTY
TRANSPORTATION AUTHORITY
550 SOUTH MAIN STREET
ORANGE, CA 92863

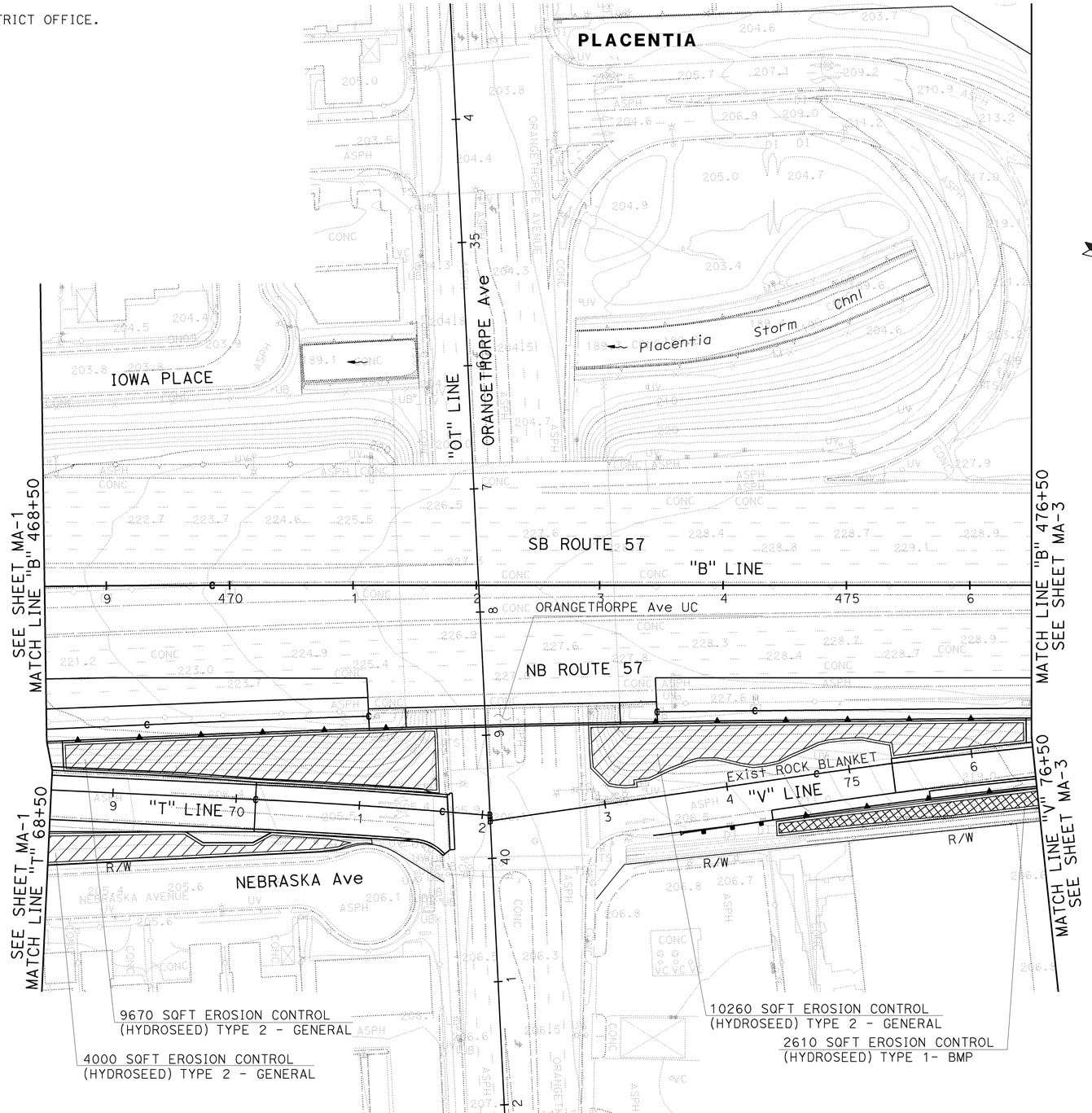

MAINTAIN EXISTING PLANTS AND EROSION CONTROL PLAN

SCALE 1" = 50'

MA-2

THIS PLAN ACCURATE FOR MAINTAIN EXISTING PLANTS AND EROSION CONTROL ONLY.

STATE OF CALIFORNIA - DEPARTMENT OF TRANSPORTATION
Caltrans

CONSULTANT SENIOR LANDSCAPE ARCHITECT: JOHN P. ANDREW
CALCULATED-DESIGNED BY: NIKI WU
CHECKED BY: CATHY L. JOHNSON
REVISED BY
DATE REVISED

H:\pdata\10105878\Admin\submittals\2009-07-15 FINAL Electronic-Only Submittal\DGN-strk IPLOT Files 2009-07-15 FINAL SUBMITTAL\c0F031th002.dgn

LAST REVISION 00-00-00
DATE PLOTTED => 16-DEC-2009
TIME PLOTTED => 08:27

BORDER LAST REVISED 4/11/2008
RELATIVE BORDER SCALE IS IN INCHES 0 1 2 3
USERNAME => trstrk
DGN FILE => c0F031th002.dgn
CU 12220
EA 0F0311

NOTE:

FOR ACCURATE RIGHT OF WAY AND ACCESS DATA,
CONTACT RIGHT OF WAY ENGINEERING AT THE DISTRICT OFFICE.

Dist	COUNTY	ROUTE	POST MILES TOTAL PROJECT	SHEET No.	TOTAL SHEETS
12	Ora	57	16.2/18.6	106	960

LICENSED LANDSCAPE ARCHITECT

12-14-09
PLANS APPROVAL DATE

THE STATE OF CALIFORNIA OR ITS OFFICERS OR AGENTS SHALL NOT BE RESPONSIBLE FOR THE ACCURACY OR COMPLETENESS OF SCANNED COPIES OF THIS PLAN SHEET.

LICENSED LANDSCAPE ARCHITECT
CATHY L. JOHNSON
No. 4546
Signature
01-31-10
Renewal Date
12-3-09
Date
STATE OF CALIFORNIA

RBF CONSULTING
14725 ALTON PKWY
IRVINE, CA 92618

ORANGE COUNTY
TRANSPORTATION AUTHORITY
550 SOUTH MAIN STREET
ORANGE, CA 92863

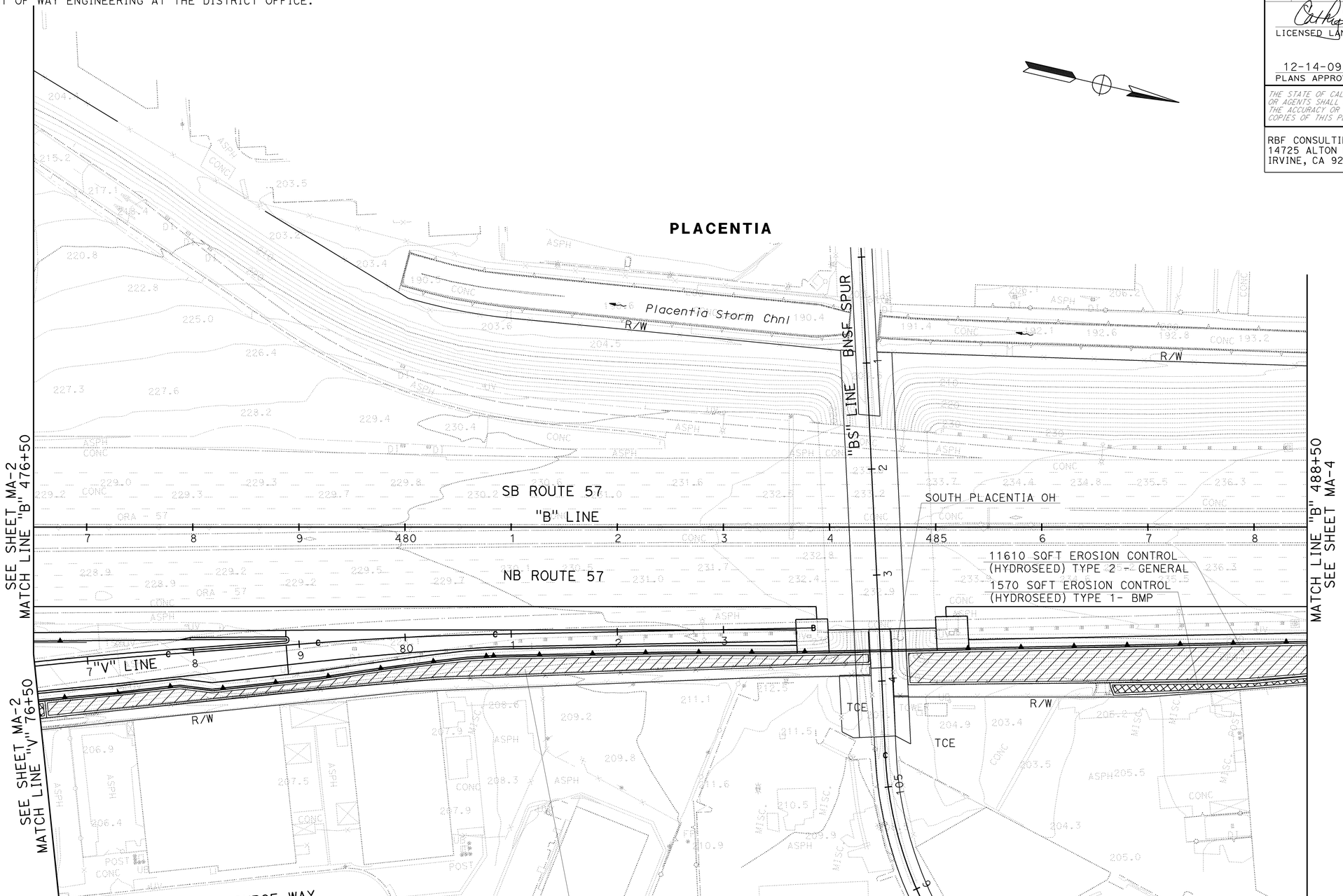

MAINTAIN EXISTING PLANTS AND EROSION CONTROL PLAN

SCALE 1" = 50'

MA-3

THIS PLAN ACCURATE FOR MAINTAIN EXISTING PLANTS AND EROSION CONTROL ONLY.

STATE OF CALIFORNIA - DEPARTMENT OF TRANSPORTATION

Caltrans

CONSULTANT SENIOR LANDSCAPE ARCHITECT: JOHN P. ANDREW

CALCULATED-DESIGNED BY: NIKI WU

CHECKED BY: CATHY L. JOHNSON

REVISED BY: JJV

DATE REVISED: 12-3-09

H:\pdata\10105878\Admin\submittals\2009-07-15 FINAL Electronic-Only Submittal\DGN-strk IPLOT Files 2009-07-15 FINAL SUBMITTAL\c0F031th003.dgn

LAST REVISION 00-00-00

DATE PLOTTED => 16-DEC-2009
TIME PLOTTED => 08:46

BORDER LAST REVISED 4/11/2008

RELATIVE BORDER SCALE IS IN INCHES 0 1 2 3

USERNAME => trstrk
DGN FILE => c0F031th003.dgn

CU 12220

EA 0F0311

NOTE:

FOR ACCURATE RIGHT OF WAY AND ACCESS DATA,
CONTACT RIGHT OF WAY ENGINEERING AT THE DISTRICT OFFICE.

Dist	COUNTY	ROUTE	POST MILES TOTAL PROJECT	SHEET No.	TOTAL SHEETS
12	Ora	57	16.2/18.6	107	960

LICENSED LANDSCAPE ARCHITECT

12-14-09
PLANS APPROVAL DATE

THE STATE OF CALIFORNIA OR ITS OFFICERS OR AGENTS SHALL NOT BE RESPONSIBLE FOR THE ACCURACY OR COMPLETENESS OF SCANNED COPIES OF THIS PLAN SHEET.

LICENSED LANDSCAPE ARCHITECT
CATHY L. JOHNSON
No. 4545
Signature
01-31-10
Renewal Date
12/3/09
Date
STATE OF CALIFORNIA

RBF CONSULTING
14725 ALTON PKWY
IRVINE, CA 92618

ORANGE COUNTY
TRANSPORTATION AUTHORITY
550 SOUTH MAIN STREET
ORANGE, CA 92863

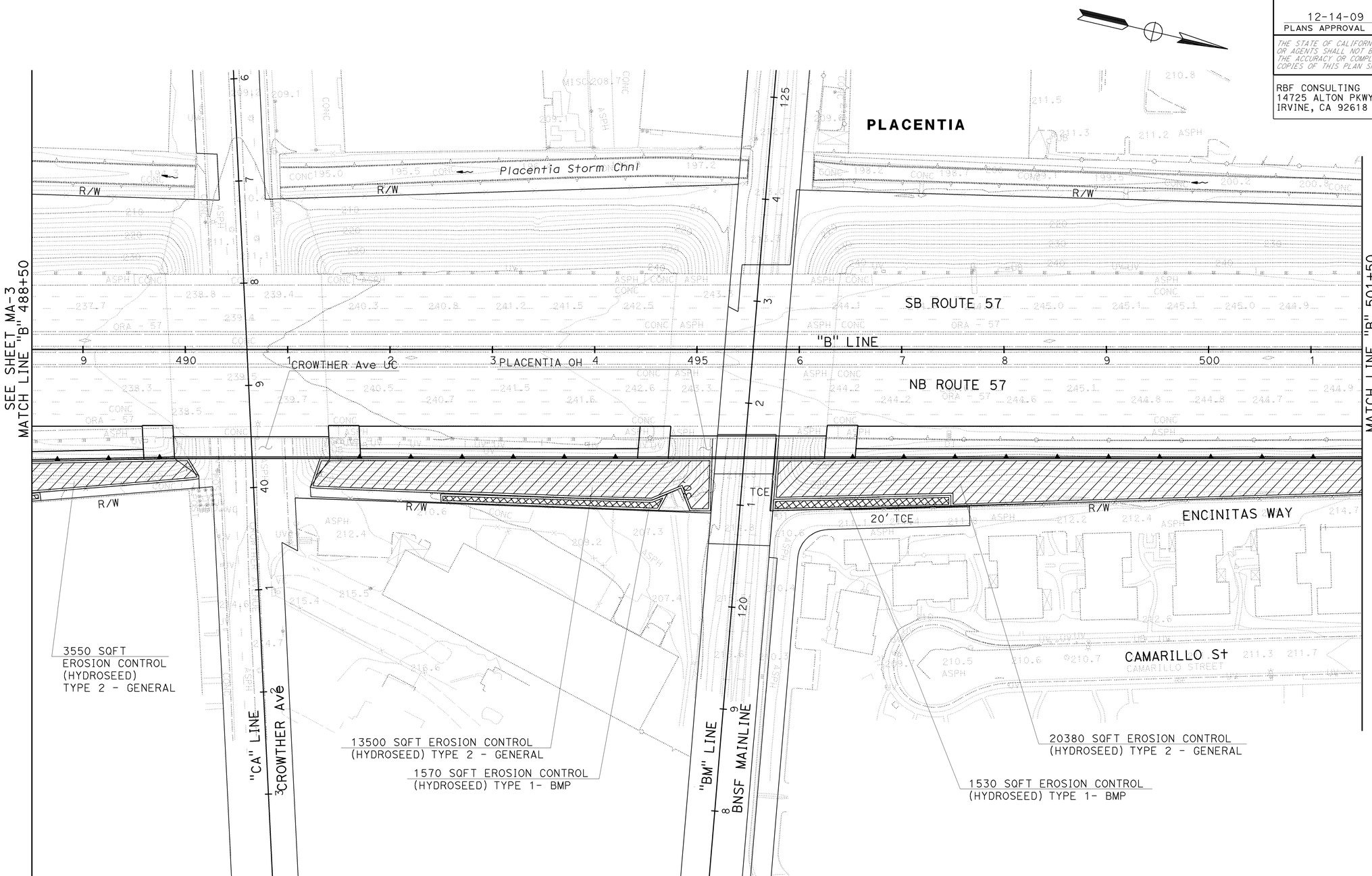

MAINTAIN EXISTING PLANTS AND EROSION CONTROL PLAN

SCALE 1" = 50'

MA-4

THIS PLAN ACCURATE FOR MAINTAIN EXISTING PLANTS AND EROSION CONTROL ONLY.

STATE OF CALIFORNIA - DEPARTMENT OF TRANSPORTATION
Caltrans
CONSULTANT SENIOR LANDSCAPE ARCHITECT: JOHN P. ANDREW
CALCULATED-DESIGNED BY: NIKI WU
CHECKED BY: CATHY L. JOHNSON
REVISED BY: JJV
DATE REVISED: 12/3/09

H:\pdata\10105878\Admin\submittals\2009-07-15 FINAL Electronic-Only Submittal\DGN and IPLOT Files 2009-07-15 FINAL SUBMITTAL\c0F031th004.dgn

LAST REVISION 00-00-00
DATE PLOTTED => 16-DEC-2009
TIME PLOTTED => 10:34

BORDER LAST REVISED 4/11/2008
RELATIVE BORDER SCALE IS IN INCHES 0 1 2 3
USERNAME => trrene
DGN FILE => c0F031th004.dgn
CU 12220
EA 0F0311

NOTE:

FOR ACCURATE RIGHT OF WAY AND ACCESS DATA,
CONTACT RIGHT OF WAY ENGINEERING AT THE DISTRICT OFFICE.

Dist	COUNTY	ROUTE	POST MILES TOTAL PROJECT	SHEET No.	TOTAL SHEETS
12	Ora	57	16.2/18.6	108	960

LICENSED LANDSCAPE ARCHITECT

12-14-09
PLANS APPROVAL DATE

THE STATE OF CALIFORNIA OR ITS OFFICERS OR AGENTS SHALL NOT BE RESPONSIBLE FOR THE ACCURACY OR COMPLETENESS OF SCANNED COPIES OF THIS PLAN SHEET.

LICENSED LANDSCAPE ARCHITECT
CATHY L. JOHNSON
No. 4545
Signature
01-31-10
Renewal Date
12-3-09
Date
STATE OF CALIFORNIA

RBF CONSULTING
14725 ALTON PKWY
IRVINE, CA 92618

ORANGE COUNTY
TRANSPORTATION AUTHORITY
550 SOUTH MAIN STREET
ORANGE, CA 92863

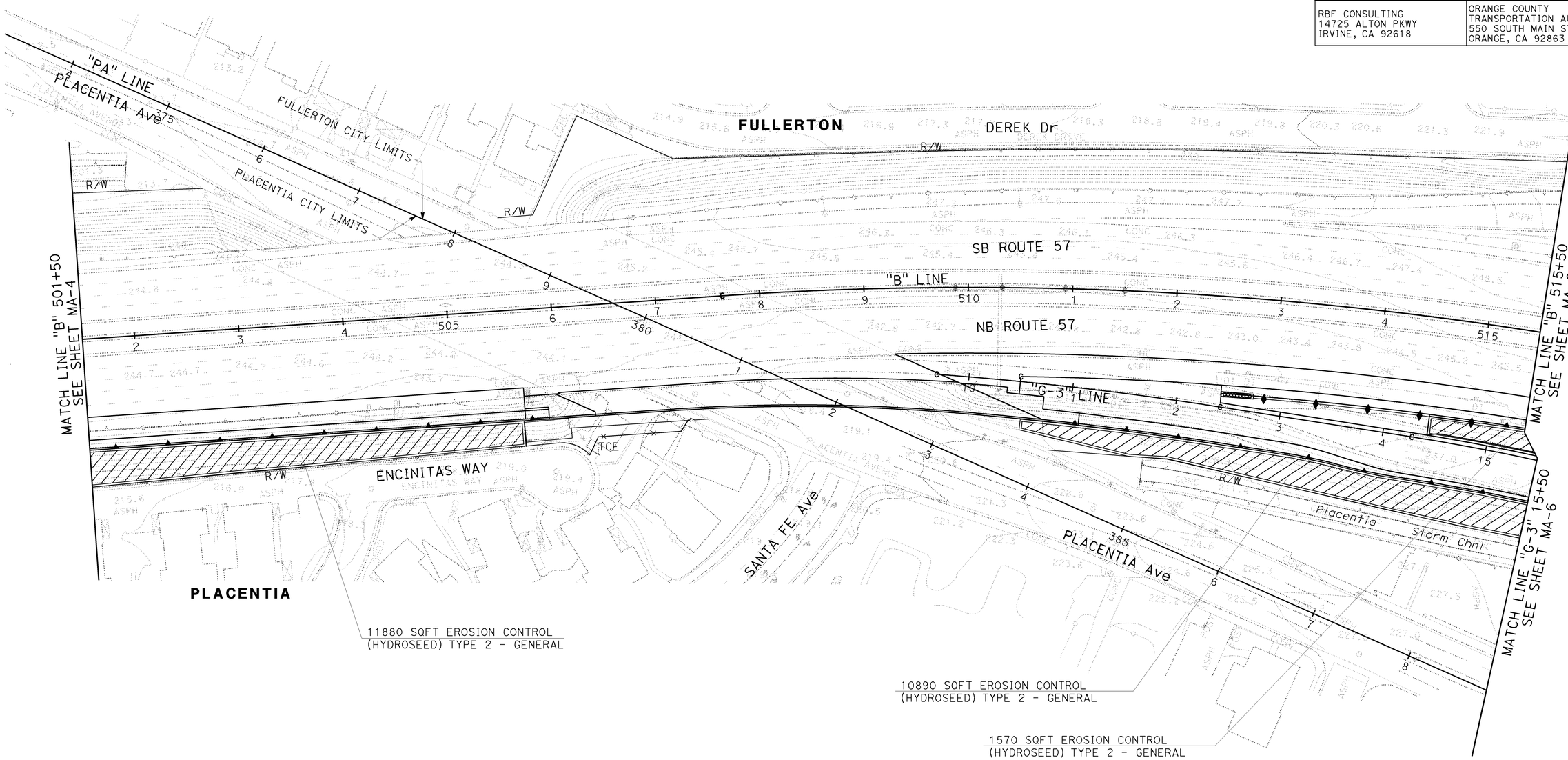

MAINTAIN EXISTING PLANTS AND EROSION CONTROL PLAN

SCALE 1" = 50'

MA-5

THIS PLAN ACCURATE FOR MAINTAIN EXISTING PLANTS AND EROSION CONTROL ONLY.

STATE OF CALIFORNIA - DEPARTMENT OF TRANSPORTATION
Caltrans

CONSULTANT SENIOR LANDSCAPE ARCHITECT: JOHN P. ANDREW
CALCULATED-DESIGNED BY: NIKI WU
CHECKED BY: CATHY L. JOHNSON
REVISED BY: JJV
DATE REVISED: 12/3/09

H:\pdata\10105878\Admin\submittals\2009-07-15 FINAL Electronic-Only Submittal\DGN and IPLOT Files 2009-07-15 FINAL SUBMITTAL\c0F031th005.dgn

LAST REVISION 00-00-00
DATE PLOTTED => 16-DEC-2009
TIME PLOTTED => 10:35

BORDER LAST REVISED 4/11/2008
RELATIVE BORDER SCALE IS IN INCHES 0 1 2 3
USERNAME => trrene
DGN FILE => c0F031th005.dgn
CU 12220
EA 0F0311

NOTE:

FOR ACCURATE RIGHT OF WAY AND ACCESS DATA,
CONTACT RIGHT OF WAY ENGINEERING AT THE DISTRICT OFFICE.

Dist	COUNTY	ROUTE	POST MILES TOTAL PROJECT	SHEET No.	TOTAL SHEETS
12	Ora	57	16.2/18.6	109	960

LICENSED LANDSCAPE ARCHITECT

12-14-09
PLANS APPROVAL DATE

LICENSED LANDSCAPE ARCHITECT
CATHY L. JOHNSON
No. 4545
Signature
01-31-10
Renewal Date
07-15-09
Date
STATE OF CALIFORNIA

THE STATE OF CALIFORNIA OR ITS OFFICERS OR AGENTS SHALL NOT BE RESPONSIBLE FOR THE ACCURACY OR COMPLETENESS OF SCANNED COPIES OF THIS PLAN SHEET.

RBF CONSULTING
14725 ALTON PKWY
IRVINE, CA 92618

ORANGE COUNTY
TRANSPORTATION AUTHORITY
550 SOUTH MAIN STREET
ORANGE, CA 92863

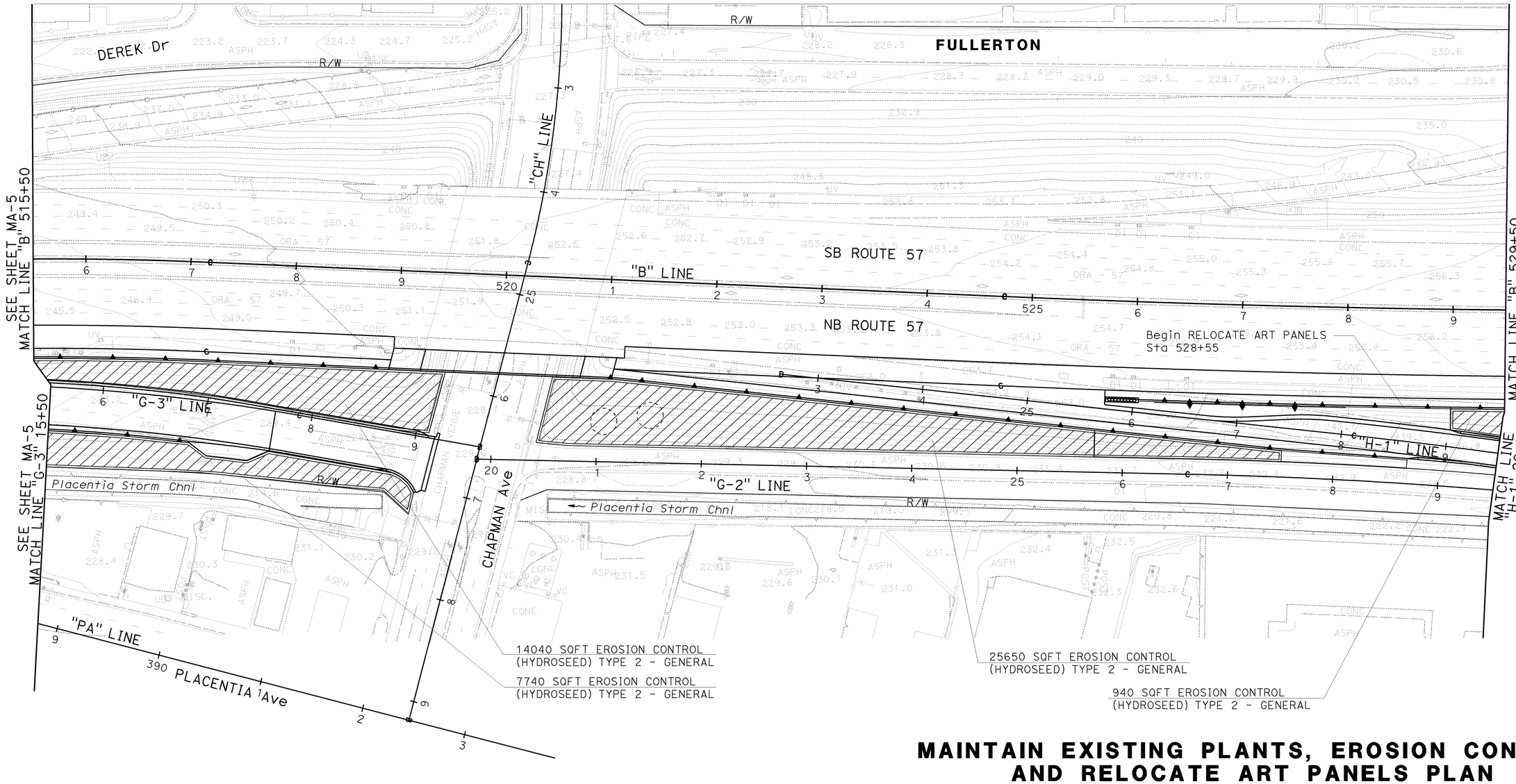

MAINTAIN EXISTING PLANTS, EROSION CONTROL AND RELOCATE ART PANELS PLAN

SCALE 1" = 50'

MA-6

THIS PLAN ACCURATE FOR MAINTAIN EXISTING PLANTS, EROSION CONTROL AND ART PANEL WORK ONLY.

H:\pdata\10105878\Admin\submittals\2009-07-15 FINAL Electronic-Only Submittal\DGN\cad sheets\PLOT Files\c0F0311th006-20090715.dgn

STATE OF CALIFORNIA - DEPARTMENT OF TRANSPORTATION | Caltrans

CONSULTANT SENIOR LANDSCAPE ARCHITECT: JOHN P. ANDREW

REVISED BY	DATE REVISED
NIKI WU	07-15-09

CALCULATED-DESIGNED BY: CATHY L. JOHNSON

CHECKED BY:

LAST REVISION | DATE PLOTTED => 16-DEC-2009
00-00-00 | TIME PLOTTED => 10:35

BORDER LAST REVISED 4/11/2008

RELATIVE BORDER SCALE IS IN INCHES 0 1 2 3

USERNAME => trrene
DGN FILE => c0F0311th006.dgn

CU 12220

EA 0F0311

NOTE:

FOR ACCURATE RIGHT OF WAY AND ACCESS DATA,
CONTACT RIGHT OF WAY ENGINEERING AT THE DISTRICT OFFICE.

Dist	COUNTY	ROUTE	POST MILES TOTAL PROJECT	SHEET No.	TOTAL SHEETS
12	Ora	57	16.2/18.6	110	960

LICENSED LANDSCAPE ARCHITECT

12-14-09
PLANS APPROVAL DATE

THE STATE OF CALIFORNIA OR ITS OFFICERS OR AGENTS SHALL NOT BE RESPONSIBLE FOR THE ACCURACY OR COMPLETENESS OF SCANNED COPIES OF THIS PLAN SHEET.

LICENSED LANDSCAPE ARCHITECT
CATHY L. JOHNSON
No. 4545
Signature
01-31-10
Renewal Date
07-15-09
Date
STATE OF CALIFORNIA

RBF CONSULTING
14725 ALTON PKWY
IRVINE, CA 92618

ORANGE COUNTY
TRANSPORTATION AUTHORITY
550 SOUTH MAIN STREET
ORANGE, CA 92863

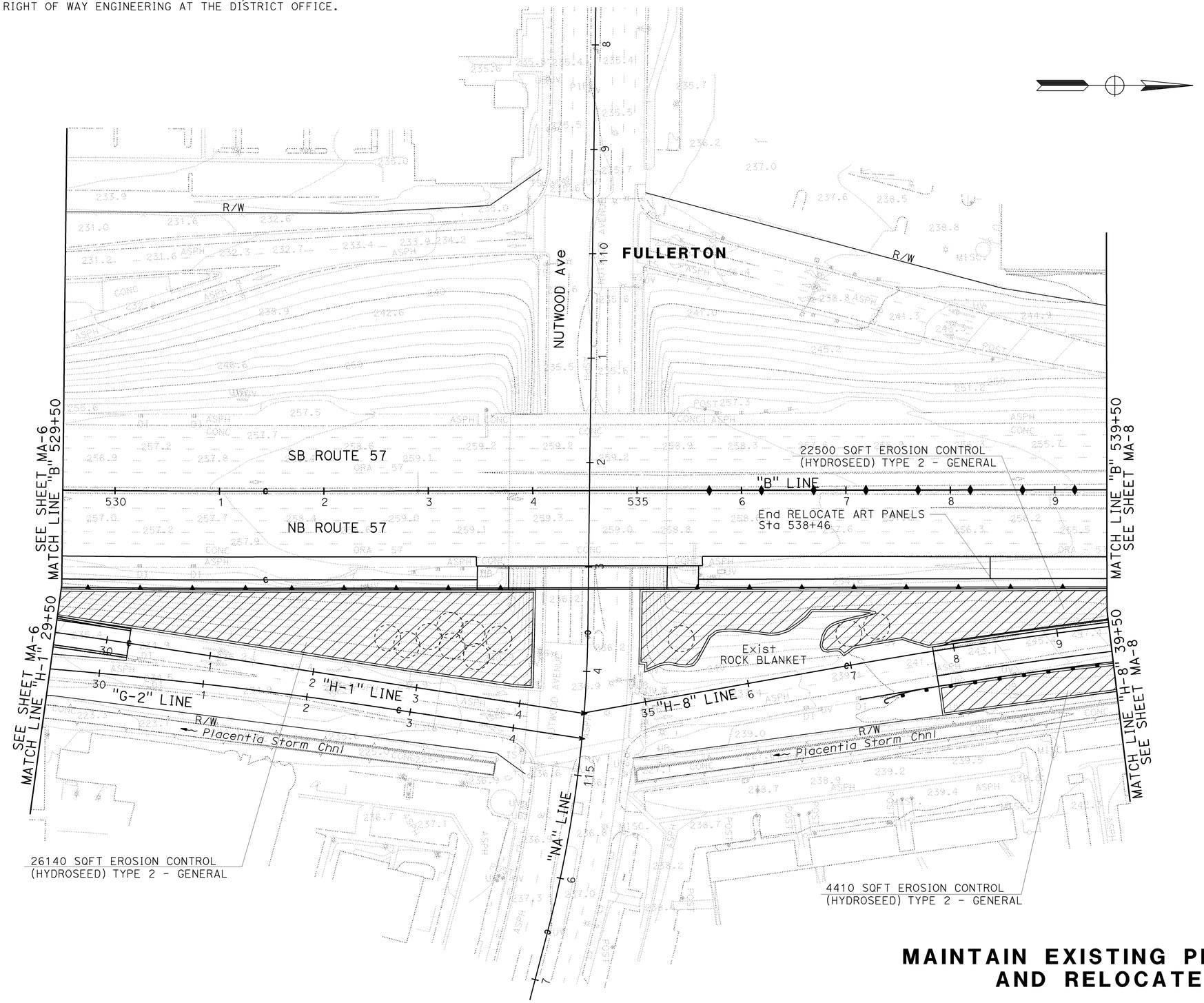

MAINTAIN EXISTING PLANTS, EROSION CONTROL AND RELOCATE ART PANELS PLAN

SCALE 1" = 50'

MA-7

THIS PLAN ACCURATE FOR MAINTAIN EXISTING PLANTS, EROSION CONTROL AND ART PANEL WORK ONLY.

STATE OF CALIFORNIA - DEPARTMENT OF TRANSPORTATION
Caltrans
CONSULTANT SENIOR LANDSCAPE ARCHITECT: JOHN P. ANDREW
CALCULATED-DESIGNED BY: NIKI WU
CHECKED BY: CATHY L. JOHNSON
REVISED BY
DATE REVISED

H:\pdata\10105878\Admin\submittals\2009-07-15 FINAL Electronic-Only Submittal\DGN and IPLOT Files\2009-07-15 FINAL SUBMITTAL\c0F031th007.dgn

LAST REVISION 00-00-00
DATE PLOTTED => 16-DEC-2009
TIME PLOTTED => 10:35

NOTE:

FOR ACCURATE RIGHT OF WAY AND ACCESS DATA,
CONTACT RIGHT OF WAY ENGINEERING AT THE DISTRICT OFFICE.

Dist	COUNTY	ROUTE	POST MILES TOTAL PROJECT	SHEET No.	TOTAL SHEETS
12	Ora	57	16.2/18.6	111	960

LICENSED LANDSCAPE ARCHITECT

12-14-09
PLANS APPROVAL DATE

LICENSED LANDSCAPE ARCHITECT
CATHY L. JOHNSON
No. 4545
Signature
01-31-10
Renewal Date
07-15-09
Date
STATE OF CALIFORNIA

THE STATE OF CALIFORNIA OR ITS OFFICERS OR AGENTS SHALL NOT BE RESPONSIBLE FOR THE ACCURACY OR COMPLETENESS OF SCANNED COPIES OF THIS PLAN SHEET.

RBF CONSULTING
14725 ALTON PKWY
IRVINE, CA 92618

ORANGE COUNTY
TRANSPORTATION AUTHORITY
550 SOUTH MAIN STREET
ORANGE, CA 92863

FULLERTON

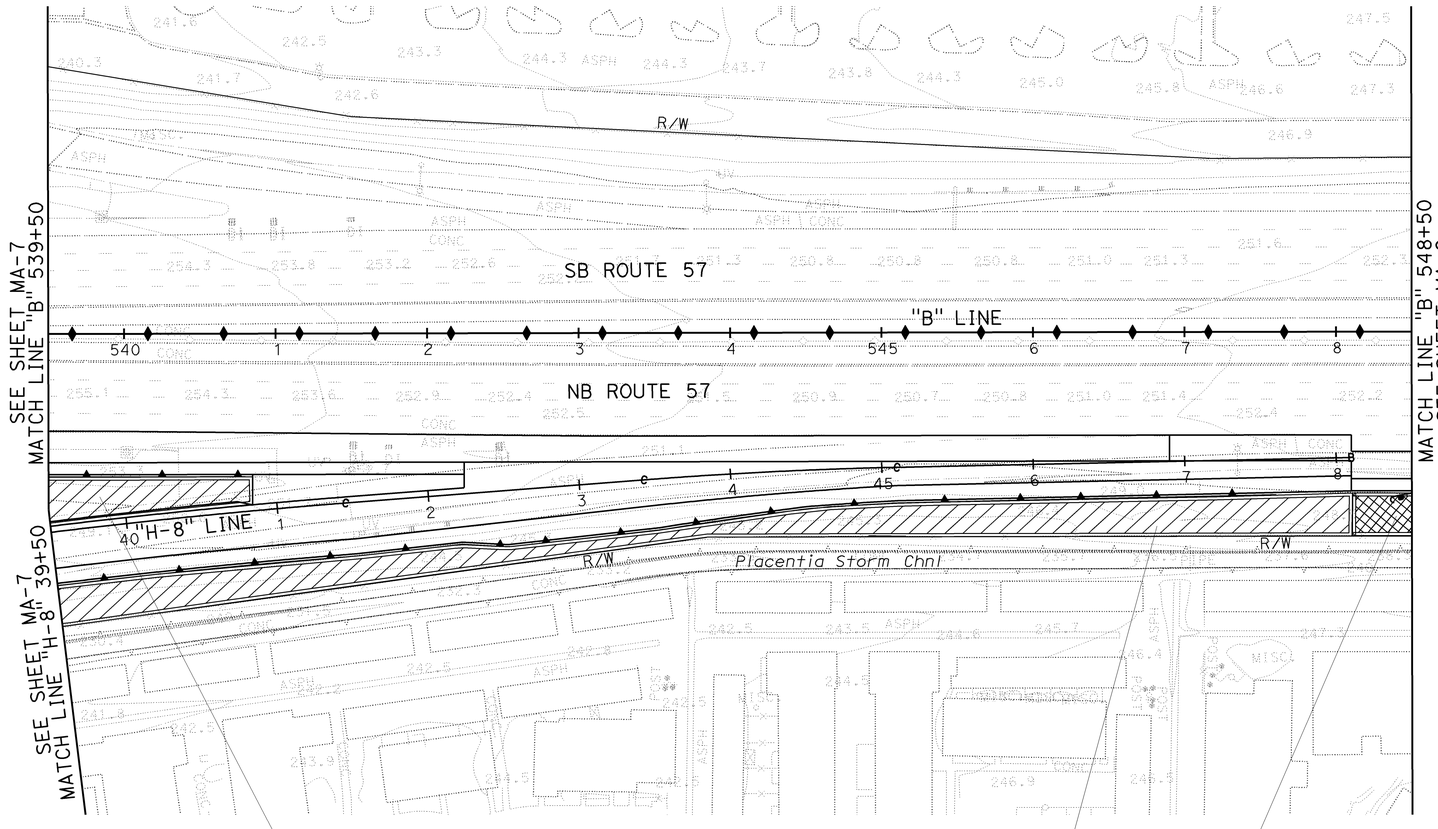

MAINTAIN EXISTING PLANTS AND EROSION CONTROL PLAN

SCALE 1" = 50'

MA-8

THIS PLAN ACCURATE FOR MAINTAIN EXISTING PLANTS AND EROSION CONTROL ONLY.

STATE OF CALIFORNIA - DEPARTMENT OF TRANSPORTATION
Caltrans
JOHN P. ANDREW
CONSULTANT SENIOR LANDSCAPE ARCHITECT
CATHY L. JOHNSON
CALCULATED-DESIGNED BY
NIKI WU
CHECKED BY
REVISED BY
DATE REVISED

LAST REVISION DATE PLOTTED => 16-DEC-2009
00-00-00 TIME PLOTTED => 10:35

H:\pdata\10105878\Admin\submittals\2009-07-15 FINAL Electronic-Only Submittal\DGN\c0F0311th008.dgn

BORDER LAST REVISED 4/11/2008

RELATIVE BORDER SCALE IS IN INCHES 0 1 2 3

USERNAME => trrene
DGN FILE => c0F0311th008.dgn

CU 12220

EA 0F0311

NOTE:

FOR ACCURATE RIGHT OF WAY AND ACCESS DATA,
CONTACT RIGHT OF WAY ENGINEERING AT THE DISTRICT OFFICE.

Dist	COUNTY	ROUTE	POST MILES TOTAL PROJECT	SHEET No.	TOTAL SHEETS
12	Ora	57	16.2/18.6	112	960

LICENSED LANDSCAPE ARCHITECT

12-14-09
PLANS APPROVAL DATE

LICENSED LANDSCAPE ARCHITECT
CATHY L. JOHNSON
No. 4248
Signature
01-31-10
Renewal Date
07-15-09
Date
STATE OF CALIFORNIA

THE STATE OF CALIFORNIA OR ITS OFFICERS OR AGENTS SHALL NOT BE RESPONSIBLE FOR THE ACCURACY OR COMPLETENESS OF SCANNED COPIES OF THIS PLAN SHEET.

RBF CONSULTING
14725 ALTON PKWY
IRVINE, CA 92618

ORANGE COUNTY
TRANSPORTATION AUTHORITY
550 SOUTH MAIN STREET
ORANGE, CA 92863

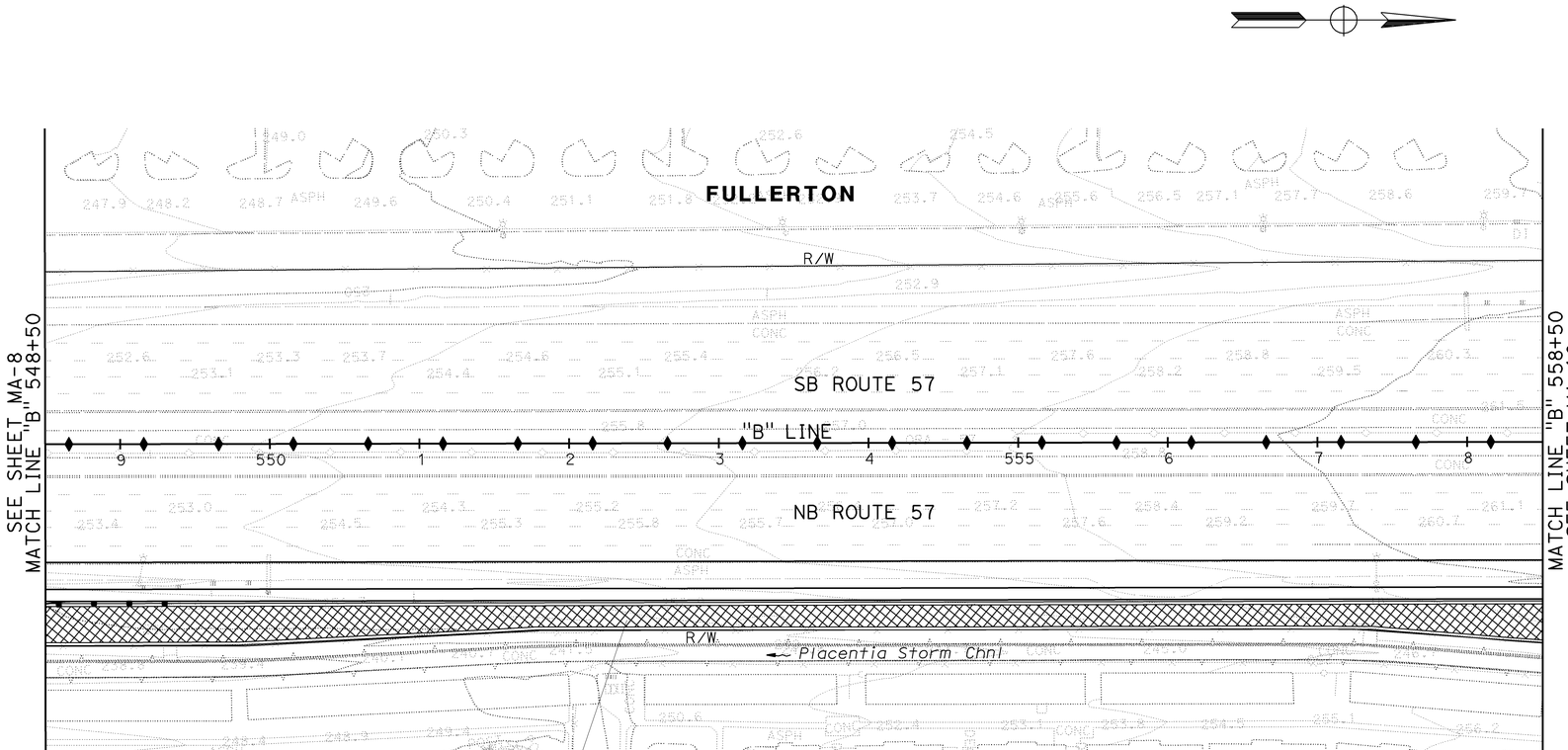

19210 SQFT EROSION CONTROL
(HYDROSEED) TYPE 1- BMP

MAINTAIN EXISTING PLANTS AND EROSION CONTROL PLAN

SCALE 1" = 50'

MA-9

THIS PLAN ACCURATE FOR MAINTAIN EXISTING PLANTS AND EROSION CONTROL ONLY.

STATE OF CALIFORNIA - DEPARTMENT OF TRANSPORTATION
Caltrans
CONSULTANT SENIOR LANDSCAPE ARCHITECT
JOHN P. ANDREW
CHECKED BY
CALCULATED-DESIGNED BY
CATHY L. JOHNSON
REVISED BY
NIKI WU
DATE REVISED

H:\pdata\10105878\Admin\submittals\2009-07-15 FINAL Electronic-Only Submittal\DGN records\c0F0311th009.dgn
IPLOT File: 2009-07-15 FINAL SUBMITTAL \c0F0311th009.dgn

LAST REVISION 00-00-00
DATE PLOTTED => 16-DEC-2009
TIME PLOTTED => 10:35

BORDER LAST REVISED 4/11/2008
RELATIVE BORDER SCALE IS IN INCHES 0 1 2 3
USERNAME => trrene
DGN FILE => c0F0311th009.dgn
CU 12220
EA 0F0311

NOTE:

FOR ACCURATE RIGHT OF WAY AND ACCESS DATA,
CONTACT RIGHT OF WAY ENGINEERING AT THE DISTRICT OFFICE.

Dist	COUNTY	ROUTE	POST MILES TOTAL PROJECT	SHEET No.	TOTAL SHEETS
12	Ora	57	16.2/18.6	113	960

LICENSED LANDSCAPE ARCHITECT

12-14-09
PLANS APPROVAL DATE

LICENSED LANDSCAPE ARCHITECT
CATHY L. JOHNSON
No. 4545
Signature
01-31-10
Renewal Date
07-15-09
Date
STATE OF CALIFORNIA

THE STATE OF CALIFORNIA OR ITS OFFICERS OR AGENTS SHALL NOT BE RESPONSIBLE FOR THE ACCURACY OR COMPLETENESS OF SCANNED COPIES OF THIS PLAN SHEET.

RBF CONSULTING
14725 ALTON PKWY
IRVINE, CA 92618

ORANGE COUNTY
TRANSPORTATION AUTHORITY
550 SOUTH MAIN STREET
ORANGE, CA 92863

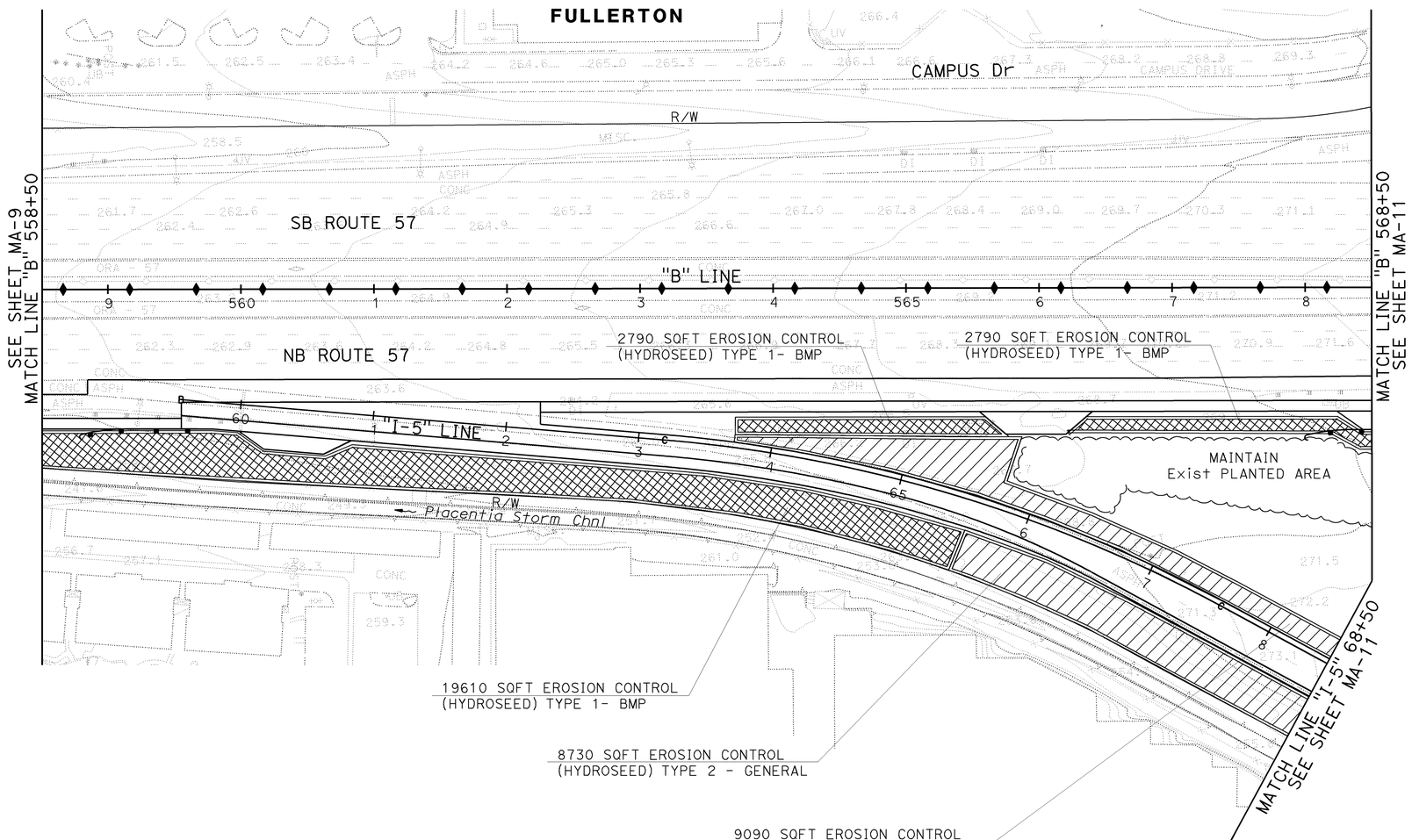

MAINTAIN EXISTING PLANTS AND EROSION CONTROL PLAN

SCALE 1" = 50'

MA-10

THIS PLAN ACCURATE FOR MAINTAIN EXISTING PLANTS AND EROSION CONTROL ONLY.

STATE OF CALIFORNIA - DEPARTMENT OF TRANSPORTATION
Caltrans
CONSULTANT SENIOR LANDSCAPE ARCHITECT: JOHN P. ANDREW
CALCULATED-DESIGNED BY: CATHY L. JOHNSON
CHECKED BY: NIKI WU
REVISED BY
DATE REVISED

H:\pdata\10105878\Admin\submittals\2009-07-15 FINAL Electronic-Only Submittal\DGN and IPLOT Files 2009-07-15 FINAL SUBMITTAL\c0F031th010.dgn

LAST REVISION 00-00-00
DATE PLOTTED => 16-DEC-2009
TIME PLOTTED => 10:35

BORDER LAST REVISED 4/11/2008
RELATIVE BORDER SCALE IS IN INCHES 0 1 2 3
USERNAME => trrene
DGN FILE => c0F031th010.dgn
CU 12220
EA 0F0311

NOTE:

FOR ACCURATE RIGHT OF WAY AND ACCESS DATA, CONTACT RIGHT OF WAY ENGINEERING AT THE DISTRICT OFFICE.

Dist	COUNTY	ROUTE	POST MILES TOTAL PROJECT	SHEET No.	TOTAL SHEETS
12	Ora	57	16.2/18.6	114	960

LICENSED LANDSCAPE ARCHITECT

12-14-09
PLANS APPROVAL DATE

THE STATE OF CALIFORNIA OR ITS OFFICERS OR AGENTS SHALL NOT BE RESPONSIBLE FOR THE ACCURACY OR COMPLETENESS OF SCANNED COPIES OF THIS PLAN SHEET.

LICENSED LANDSCAPE ARCHITECT CATHY L. JOHNSON No. 4545 Signature 01-31-10 Renewal Date 07-15-09 Date STATE OF CALIFORNIA

RBF CONSULTING
14725 ALTON PKWY
IRVINE, CA 92618

ORANGE COUNTY
TRANSPORTATION AUTHORITY
550 SOUTH MAIN STREET
ORANGE, CA 92863

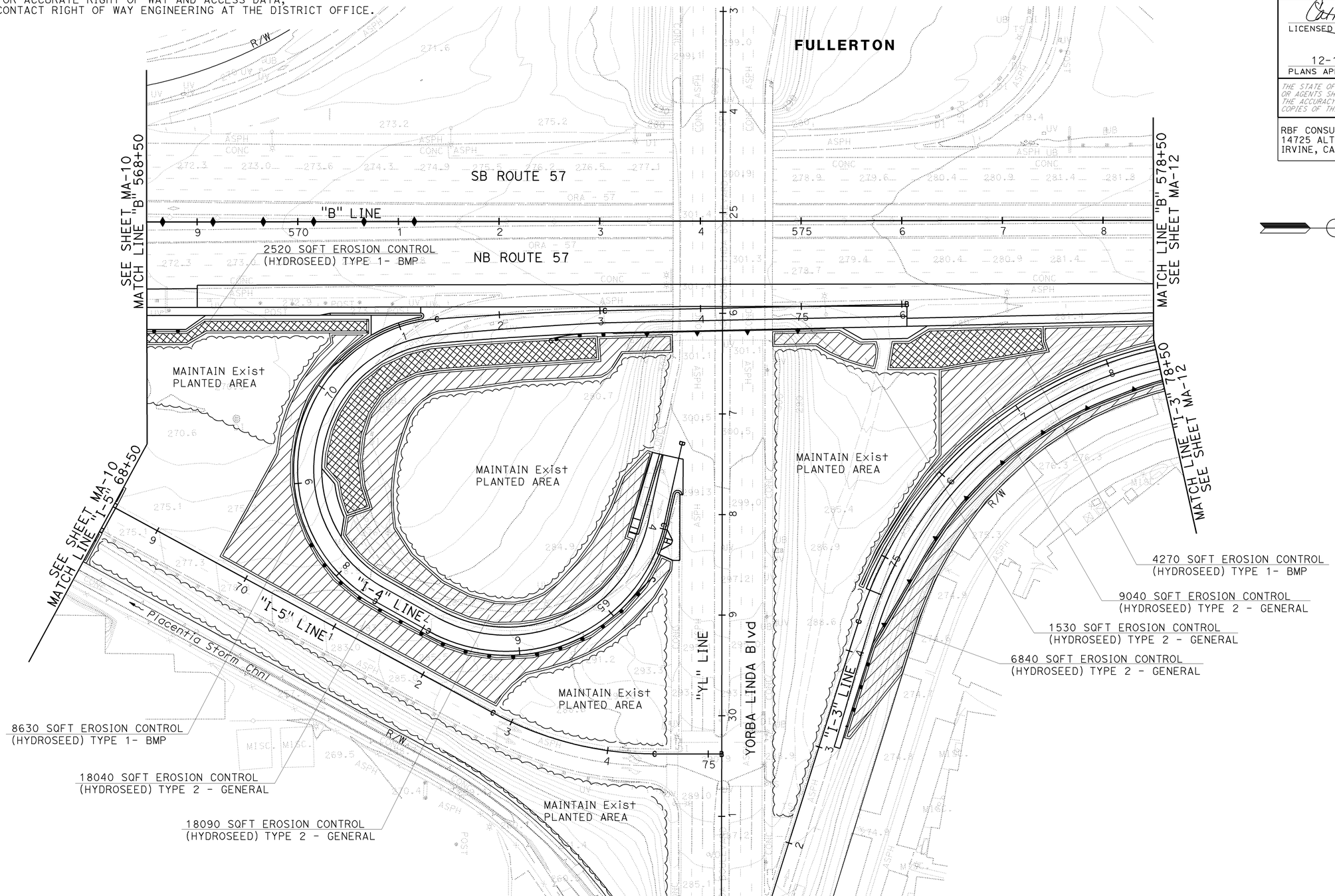

MAINTAIN EXISTING PLANTS AND EROSION CONTROL PLAN

SCALE 1" = 50'

MA-11

THIS PLAN ACCURATE FOR MAINTAIN EXISTING PLANTS AND EROSION CONTROL ONLY.

STATE OF CALIFORNIA - DEPARTMENT OF TRANSPORTATION

Caltrans

CONSULTANT SENIOR LANDSCAPE ARCHITECT: JOHN P. ANDREW

CALCULATED-DESIGNED BY: CATHY L. JOHNSON

CHECKED BY: NIKI WU

REVISED BY

DATE REVISED

H:\pdata\10105878\Admin\submittals\2009-07-15 FINAL Electronic-Only Submittal\DGN\ceme IPLOT Files 16-DEC-2009 10:35 SUBMITTAL\c0F031th011.dgn

LAST REVISION 00-00-00 DATE PLOTTED => 16-DEC-2009 TIME PLOTTED => 10:35

BORDER LAST REVISED 4/11/2008

RELATIVE BORDER SCALE IS IN INCHES 0 1 2 3

USERNAME => trrene
DGN FILE => c0F031th011.dgn

CU 12220

EA 0F0311

NOTE:

FOR ACCURATE RIGHT OF WAY AND ACCESS DATA,
CONTACT RIGHT OF WAY ENGINEERING AT THE DISTRICT OFFICE.

Dist	COUNTY	ROUTE	POST MILES TOTAL PROJECT	SHEET No.	TOTAL SHEETS
12	Ora	57	16.2/18.6	115	960

LICENSED LANDSCAPE ARCHITECT

12-14-09
PLANS APPROVAL DATE

LICENSED LANDSCAPE ARCHITECT
CATHY L. JOHNSON
No. 4545
Signature
01-31-10
Renewal Date
07-15-09
Date
STATE OF CALIFORNIA

THE STATE OF CALIFORNIA OR ITS OFFICERS OR AGENTS SHALL NOT BE RESPONSIBLE FOR THE ACCURACY OR COMPLETENESS OF SCANNED COPIES OF THIS PLAN SHEET.

RBF CONSULTING
14725 ALTON PKWY
IRVINE, CA 92618

ORANGE COUNTY
TRANSPORTATION AUTHORITY
550 SOUTH MAIN STREET
ORANGE, CA 92863

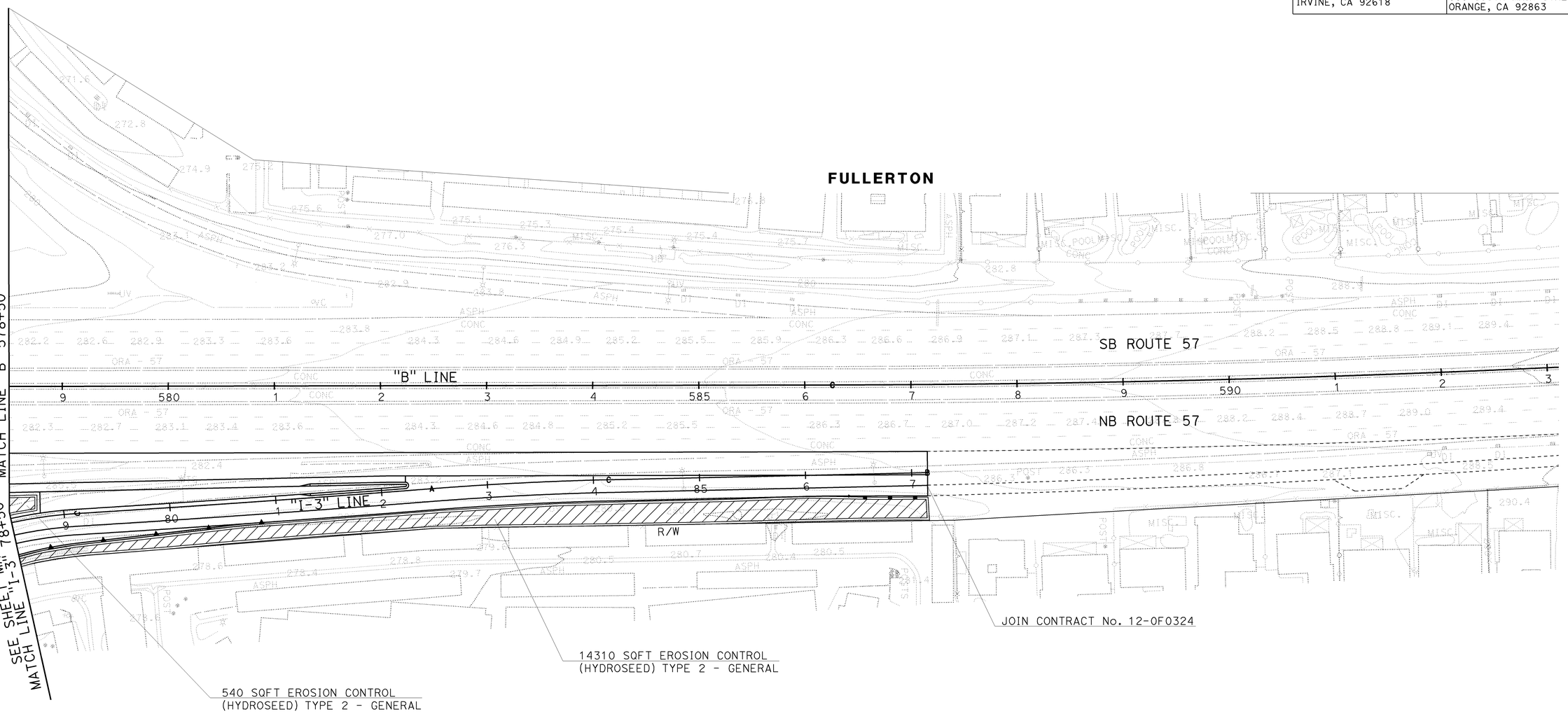

MAINTAIN EXISTING PLANTS AND EROSION CONTROL PLAN

SCALE 1" = 50'

MA-12

THIS PLAN ACCURATE FOR MAINTAIN EXISTING PLANTS AND EROSION CONTROL ONLY.

STATE OF CALIFORNIA - DEPARTMENT OF TRANSPORTATION
Caltrans
CONSULTANT SENIOR LANDSCAPE ARCHITECT: JOHN P. ANDREW
CALCULATED-DESIGNED BY: NIKI WU
CHECKED BY: CATHY L. JOHNSON
REVISED BY
DATE REVISED

H:\pdata\10105878\Admin\submittals\2009-07-15 FINAL Electronic-Only Submittal\DGN and IPLOT Files 2009-07-15 FINAL SUBMITTAL\c0F031th012.dgn

LAST REVISION 00-00-00
DATE PLOTTED => 16-DEC-2009
TIME PLOTTED => 10:35

BORDER LAST REVISED 4/11/2008
RELATIVE BORDER SCALE IS IN INCHES 0 1 2 3
USERNAME => trrene
DGN FILE => c0F031th012.dgn
CU 12220
EA 0F0311

Dist	COUNTY	ROUTE	POST MILES TOTAL PROJECT	SHEET No.	TOTAL SHEETS
12	Ora	57	16.2/18.6	116	960

REGISTERED CIVIL ENGINEER 7/15/09 DATE

12-14-09
PLANS APPROVAL DATE

REGISTERED PROFESSIONAL ENGINEER JOSUE J. VAGLIENTY No. 70783 Exp. 6-30-11 CIVIL STATE OF CALIFORNIA

THE STATE OF CALIFORNIA OR ITS OFFICERS OR AGENTS SHALL NOT BE RESPONSIBLE FOR THE ACCURACY OR COMPLETENESS OF SCANNED COPIES OF THIS PLAN SHEET.

RBF CONSULTING
14275 ALTON PKWY
IRVINE, CA 92618

OCTA
550 S. MAIN STREET
ORANGE, CA 92863

NOTES:

1. FOR COMPLETE R/W AND ACCURATE ACCESS DATA, SEE R/W RECORD MAPS AT DISTRICT OFFICE.
2. FOR IRRIGATION CROSSOVER TABLE, SEE SHEET LD-1.

ABBREVIATIONS

CHDPE - CORRUGATED HIGH DENSITY POLYETHYLENE PIPE

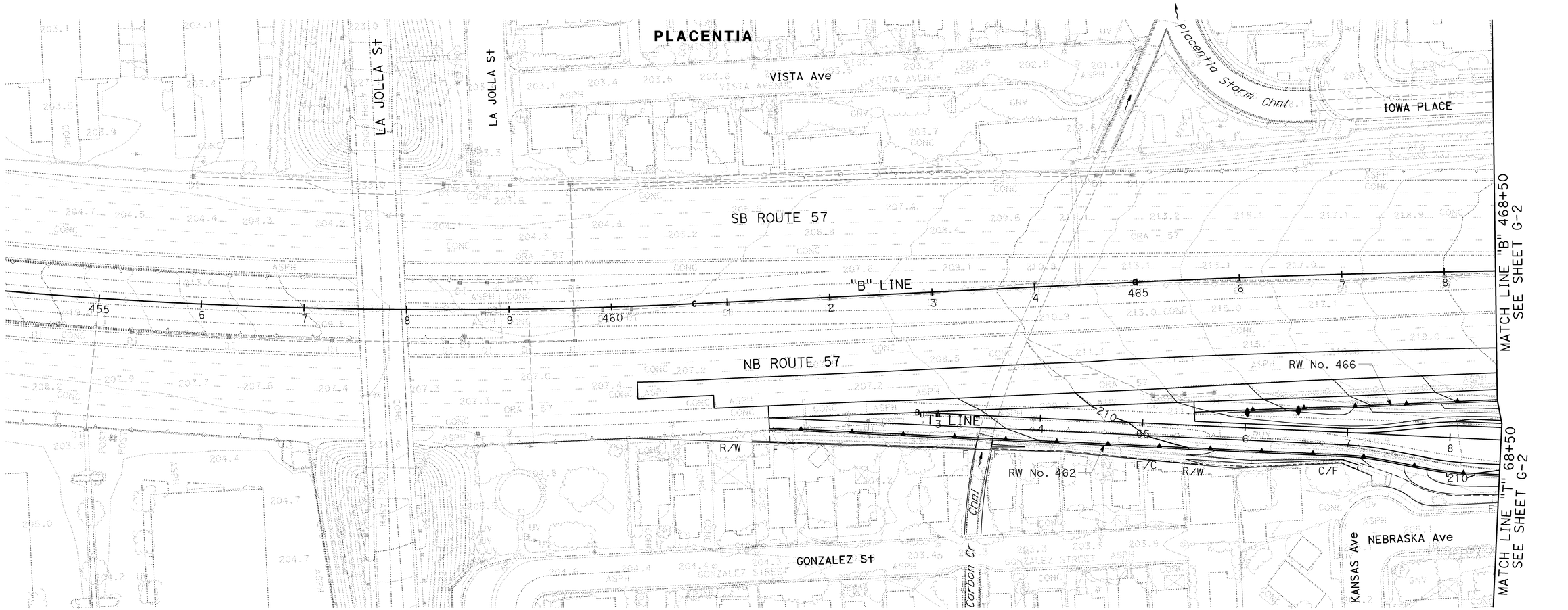

CONTOUR GRADING

SCALE: 1" = 50'

G-1

THIS PLAN ACCURATE FOR CONTOUR GRADING WORK ONLY.

STATE OF CALIFORNIA - DEPARTMENT OF TRANSPORTATION
Caltrans

CONSULTANT FUNCTIONAL SUPERVISOR: GONZALO PEÑA
CALCULATED-DESIGNED BY: SUSAN POMERLEAU
CHECKED BY: JOSUE VAGLIENTY
REVISED BY
DATE REVISED

H:\pdata\10105878\Admin\submittals\2009-07-15 FINAL Electronic-Only Submittal\DGN\rmnguye PLOT Files 2009-07-15 FINAL SUBMITTAL\c0F031ha001.dgn

LAST REVISION 08-01-08
DATE PLOTTED => 16-DEC-2009
TIME PLOTTED => 07:13

BORDER LAST REVISED 4/11/2008
RELATIVE BORDER SCALE IS IN INCHES 0 1 2 3
USERNAME => trmnguye
DGN FILE => c0F031ha001.dgn
CU 12220
EA 0F0311

Dist	COUNTY	ROUTE	POST MILES TOTAL PROJECT	SHEET No.	TOTAL SHEETS
12	Ora	57	16.2/18.6	117	960

REGISTERED CIVIL ENGINEER 7/15/09 DATE

12-14-09
PLANS APPROVAL DATE

REGISTERED PROFESSIONAL ENGINEER JOSUE J. VAGLIENTY No. 70783 Exp. 6-30-11 CIVIL STATE OF CALIFORNIA

THE STATE OF CALIFORNIA OR ITS OFFICERS OR AGENTS SHALL NOT BE RESPONSIBLE FOR THE ACCURACY OR COMPLETENESS OF SCANNED COPIES OF THIS PLAN SHEET.

RBF CONSULTING
14275 ALTON PKWY
IRVINE, CA 92618

OCTA
550 S. MAIN STREET
ORANGE, CA 92863

NOTE:

FOR COMPLETE RIGHT OF WAY AND ACCURATE ACCESS DATA, SEE RIGHT OF WAY RECORD MAPS AT DISTRICT OFFICE.

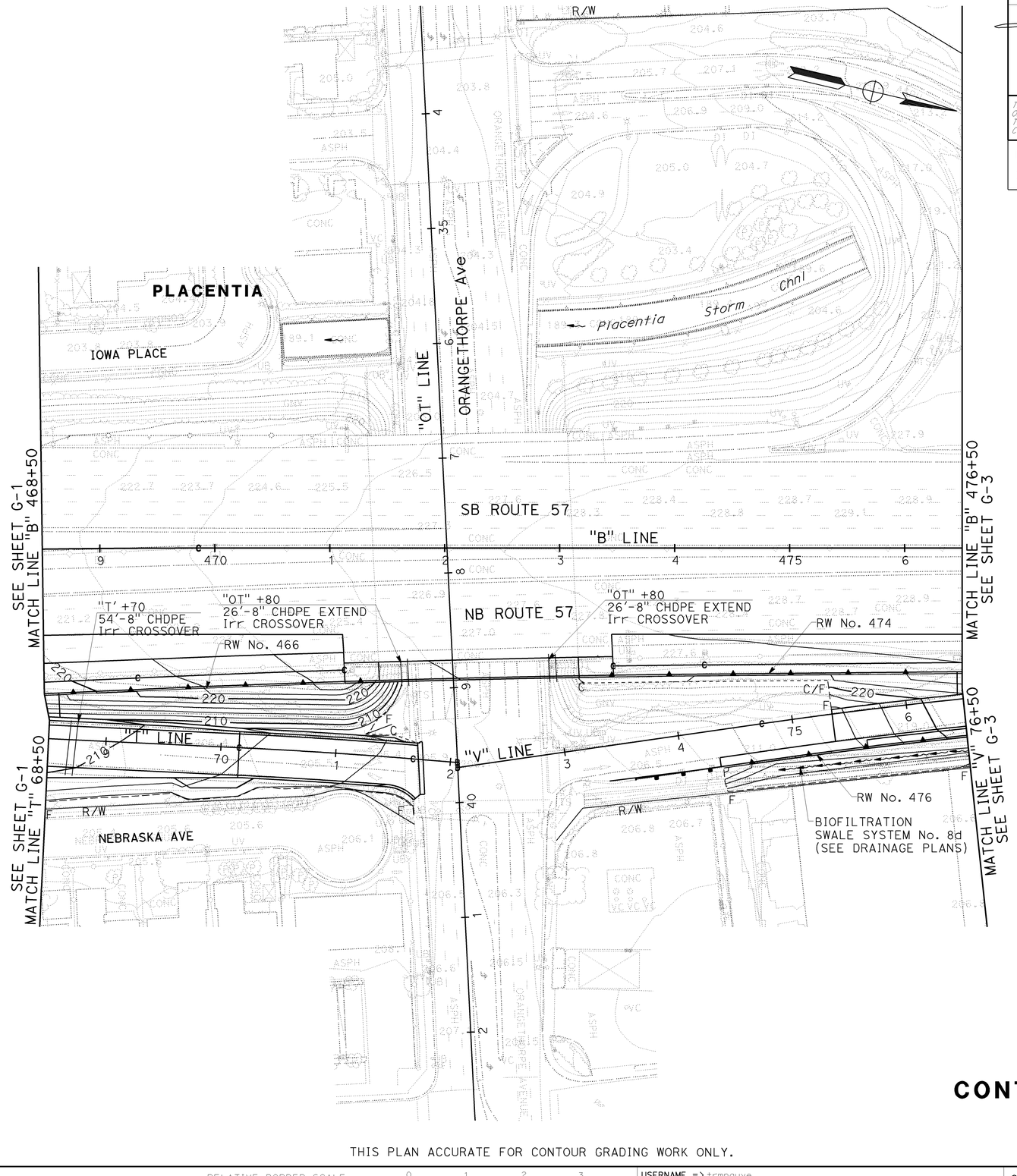

CONTOUR GRADING

SCALE: 1" = 50'

G-2

THIS PLAN ACCURATE FOR CONTOUR GRADING WORK ONLY.

STATE OF CALIFORNIA - DEPARTMENT OF TRANSPORTATION
Caltrans

CONSULTANT FUNCTIONAL SUPERVISOR: GONZALO PEÑA
CALCULATED-DESIGNED BY: SUSAN POMERLEAU
CHECKED BY: JOSUE VAGLIENTY
REVISED BY
DATE REVISED

H:\pdata\10105878\Admin\submittals\2009-07-15 FINAL Electronic-Only Submittal\DGN\rmnguye\PLOT Files\2009-07-15 FINAL SUBMITTAL\c0F031ha002.dgn

LAST REVISION 08-01-08
DATE PLOTTED => 16-DEC-2009
TIME PLOTTED => 07:13

BORDER LAST REVISED 4/11/2008
RELATIVE BORDER SCALE IS IN INCHES 0 1 2 3
USERNAME => trmnguye
DGN FILE => c0F031ha002.dgn
CU 12220
EA 0F0311

Dist	COUNTY	ROUTE	POST MILES TOTAL PROJECT	SHEET No.	TOTAL SHEETS
12	Ora	57	16.2/18.6	118	960

REGISTERED CIVIL ENGINEER — 12/3/09 DATE

12-14-09
PLANS APPROVAL DATE

REGISTERED PROFESSIONAL ENGINEER
JOSUE J. VAGLIENTY
No. 70783
Exp. 6-30-11
CIVIL
STATE OF CALIFORNIA

THE STATE OF CALIFORNIA OR ITS OFFICERS OR AGENTS SHALL NOT BE RESPONSIBLE FOR THE ACCURACY OR COMPLETENESS OF SCANNED COPIES OF THIS PLAN SHEET.

RBF CONSULTING
14275 ALTON PKWY
IRVINE, CA 92618

OCTA
550 S. MAIN STREET
ORANGE, CA 92863

NOTE:

FOR COMPLETE RIGHT OF WAY AND ACCURATE ACCESS DATA,
SEE RIGHT OF WAY RECORD MAPS AT DISTRICT OFFICE.

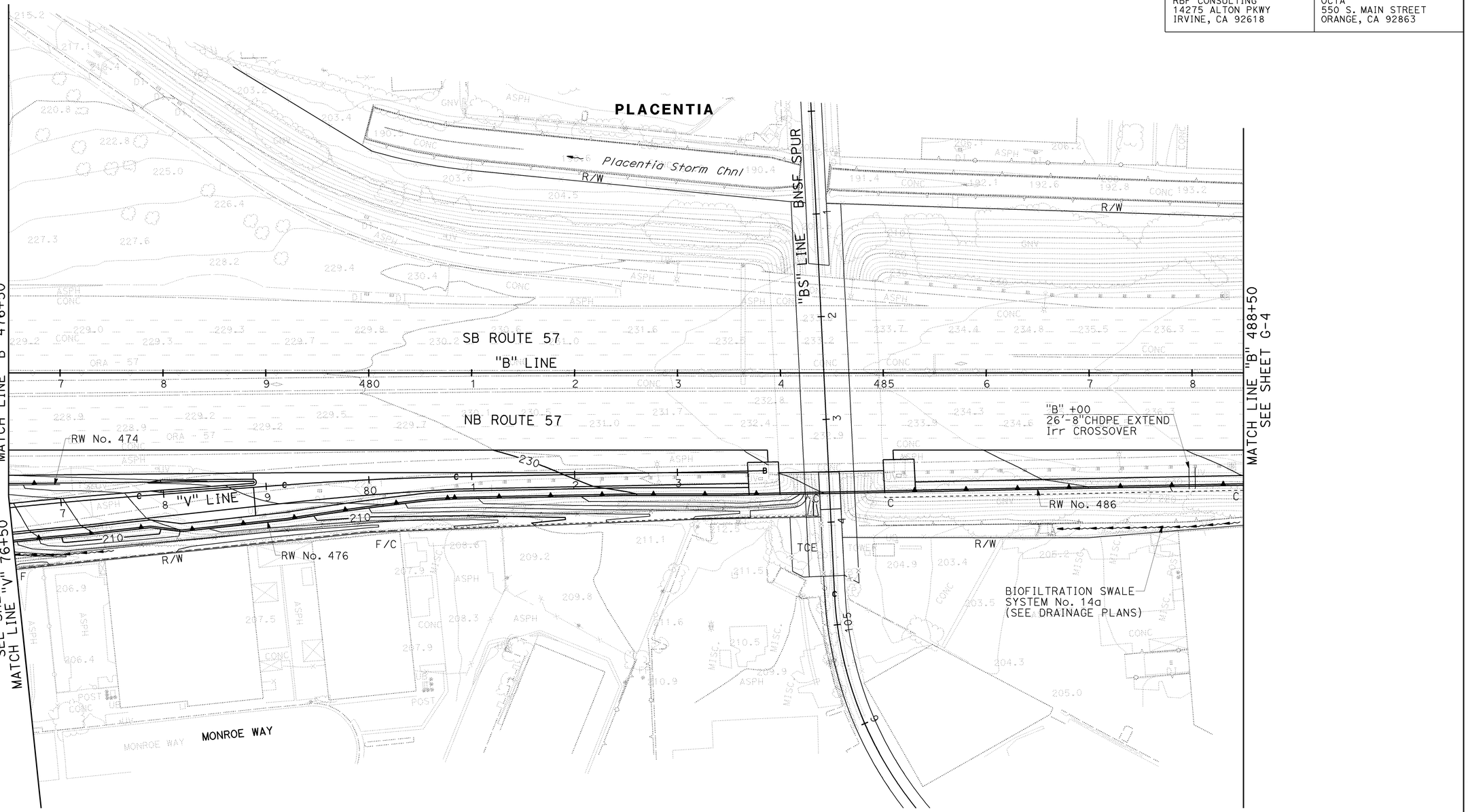

CONTOUR GRADING

SCALE: 1" = 50'

G-3

THIS PLAN ACCURATE FOR CONTOUR GRADING WORK ONLY.

CHECKED BY: JOSUE VAGLIENTY	CALCULATED-DESIGNED BY: SUSAN POMERLEAU	REVISED BY: JJV	DATE REVISED: 12/03/09
CONSULTANT FUNCTIONAL SUPERVISOR: GONZALO PEÑA			
STATE OF CALIFORNIA - DEPARTMENT OF TRANSPORTATION			

H:\pdata\10105878\Admin\submittals\2009-07-15 FINAL Electronic-Only Submittal\DGN\ranguyen\LOT File86 20090720090507 FINAL SUBMITTAL\c0F031ha003.dgn

LAST REVISION — DATE PLOTTED => 16-DEC-2009 / TIME PLOTTED => 07:13
08-01-08

BORDER LAST REVISED 4/11/2008 | RELATIVE BORDER SCALE IS IN INCHES 0 1 2 3 | USERNAME => trmnguye | DGN FILE => c0F031ha003.dgn | CU 12220 | EA 0F0311

Dist	COUNTY	ROUTE	POST MILES TOTAL PROJECT	SHEET No.	TOTAL SHEETS
12	Ora	57	16.2/18.6	119	960

REGISTERED CIVIL ENGINEER 12/3/09 DATE

12-14-09
PLANS APPROVAL DATE

REGISTERED PROFESSIONAL ENGINEER JOSUE J. VAGLIENTY No. 70783 Exp. 6-30-11 CIVIL STATE OF CALIFORNIA

THE STATE OF CALIFORNIA OR ITS OFFICERS OR AGENTS SHALL NOT BE RESPONSIBLE FOR THE ACCURACY OR COMPLETENESS OF SCANNED COPIES OF THIS PLAN SHEET.

RBF CONSULTING
14275 ALTON PKWY
IRVINE, CA 92618

OCTA
550 S. MAIN STREET
ORANGE, CA 92863

NOTE:

FOR COMPLETE RIGHT OF WAY AND ACCURATE ACCESS DATA, SEE RIGHT OF WAY RECORD MAPS AT DISTRICT OFFICE.

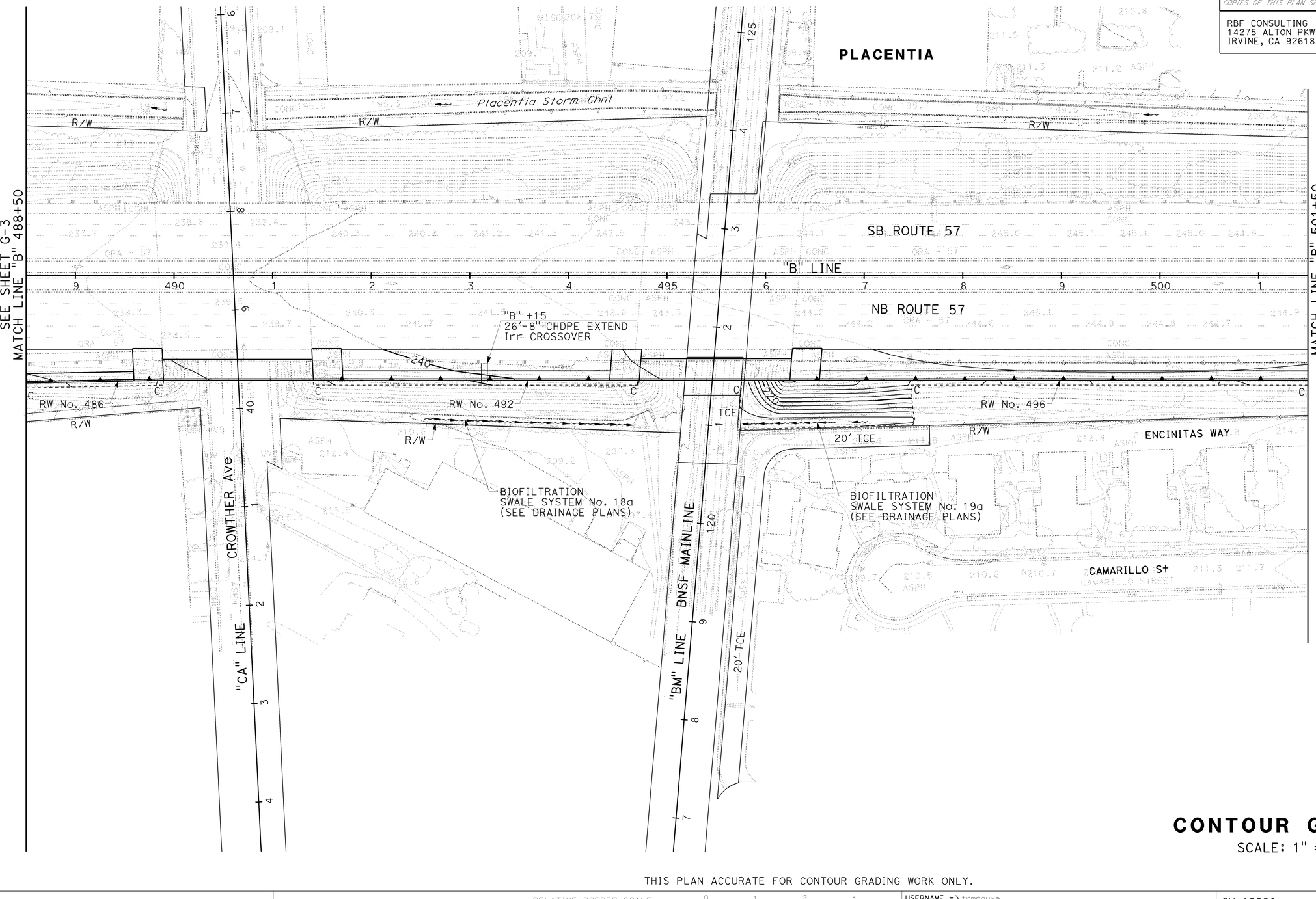

CONTOUR GRADING

SCALE: 1" = 50'

G-4

THIS PLAN ACCURATE FOR CONTOUR GRADING WORK ONLY.

STATE OF CALIFORNIA - DEPARTMENT OF TRANSPORTATION

Caltrans

CONSULTANT FUNCTIONAL SUPERVISOR: GONZALO PEÑA

CALCULATED-DESIGNED BY: SUSAN POMERLEAU

CHECKED BY: JOSUE VAGLIENTY

REVISED BY: JJV

DATE REVISED: 12/03/09

H:\pdata\10105878\Admin\submittals\2009-07-15 FINAL Electronic-Only Submittal\DGN\rmnguye\PLOT Files\2009-07-15 FINAL SUBMITTAL\c0F031ha004.dgn

LAST REVISION 08-01-08

DATE PLOTTED => 16-DEC-2009
TIME PLOTTED => 07:13

BORDER LAST REVISED 4/11/2008

RELATIVE BORDER SCALE IS IN INCHES 0 1 2 3

USERNAME => trmnguye
DGN FILE => c0F031ha004.dgn

CU 12220

EA 0F0311

Dist	COUNTY	ROUTE	POST MILES TOTAL PROJECT	SHEET No.	TOTAL SHEETS
12	Ora	57	16.2/18.6	120	960

REGISTERED CIVIL ENGINEER 12/3/09 DATE

12-14-09
PLANS APPROVAL DATE

REGISTERED PROFESSIONAL ENGINEER JOSUE J. VAGLIENTY No. 70783 Exp. 6-30-11 CIVIL STATE OF CALIFORNIA

THE STATE OF CALIFORNIA OR ITS OFFICERS OR AGENTS SHALL NOT BE RESPONSIBLE FOR THE ACCURACY OR COMPLETENESS OF SCANNED COPIES OF THIS PLAN SHEET.

RBF CONSULTING
14275 ALTON PKWY
IRVINE, CA 92618

OCTA
550 S. MAIN STREET
ORANGE, CA 92863

NOTE:

FOR COMPLETE RIGHT OF WAY AND ACCURATE ACCESS DATA, SEE RIGHT OF WAY RECORD MAPS AT DISTRICT OFFICE.

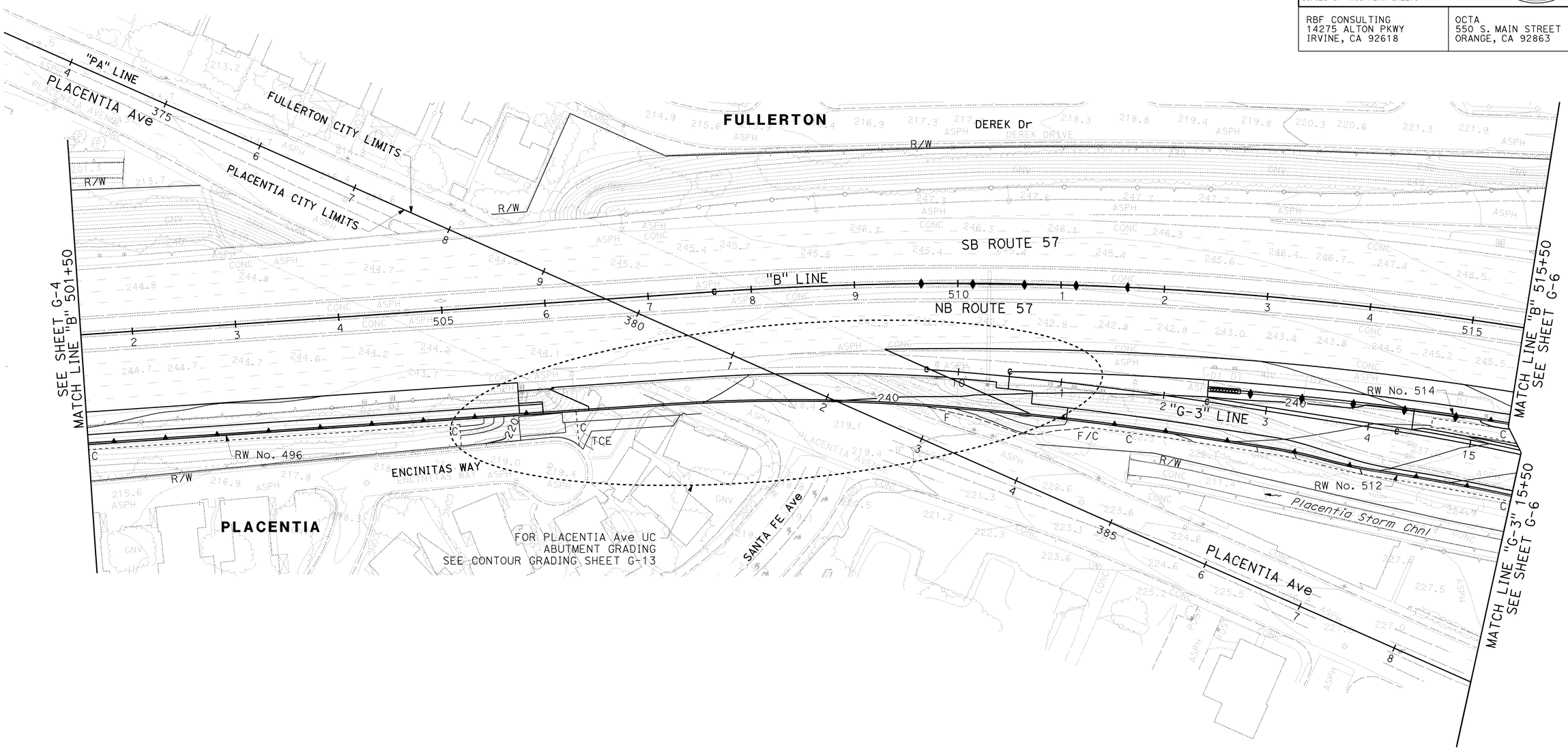

CONTOUR GRADING

SCALE: 1" = 50'

G-5

THIS PLAN ACCURATE FOR CONTOUR GRADING WORK ONLY.

STATE OF CALIFORNIA - DEPARTMENT OF TRANSPORTATION
Caltrans

CONSULTANT FUNCTIONAL SUPERVISOR: GONZALO PEÑA
CALCULATED-DESIGNED BY: SUSAN POMERLEAU
CHECKED BY: JOSUE VAGLIENTY
REVISED BY: JJV
DATE REVISED: 12/03/09

H:\pdata\10105878\Admin\submittals\2009-07-15 FINAL Electronic-Only Submittal\DGNrmnguye\PLOT Files\2009-07-15 FINAL SUBMITTAL\c0F031ha005.dgn

LAST REVISION 08-01-08
DATE PLOTTED => 16-DEC-2009
TIME PLOTTED => 07:13

BORDER LAST REVISED 4/11/2008
RELATIVE BORDER SCALE IS IN INCHES 0 1 2 3
USERNAME => trmnguye
DGN FILE => c0F031ha005.dgn
CU 12220
EA 0F0311

NOTE:

FOR COMPLETE RIGHT OF WAY AND ACCURATE ACCESS DATA,
SEE RIGHT OF WAY RECORD MAPS AT DISTRICT OFFICE.

Dist	COUNTY	ROUTE	POST MILES TOTAL PROJECT	SHEET No.	TOTAL SHEETS
12	Ora	57	16.2/18.6	121	960

REGISTERED CIVIL ENGINEER — DATE 7/15/09

JOSUE J. VAGLIENTY No. 70783 Exp. 6-30-11 CIVIL — REGISTERED PROFESSIONAL ENGINEER — STATE OF CALIFORNIA

12-14-09
PLANS APPROVAL DATE

THE STATE OF CALIFORNIA OR ITS OFFICERS OR AGENTS SHALL NOT BE RESPONSIBLE FOR THE ACCURACY OR COMPLETENESS OF SCANNED COPIES OF THIS PLAN SHEET.

RBF CONSULTING
14275 ALTON PKWY
IRVINE, CA 92618

OCTA
550 S. MAIN STREET
ORANGE, CA 92863

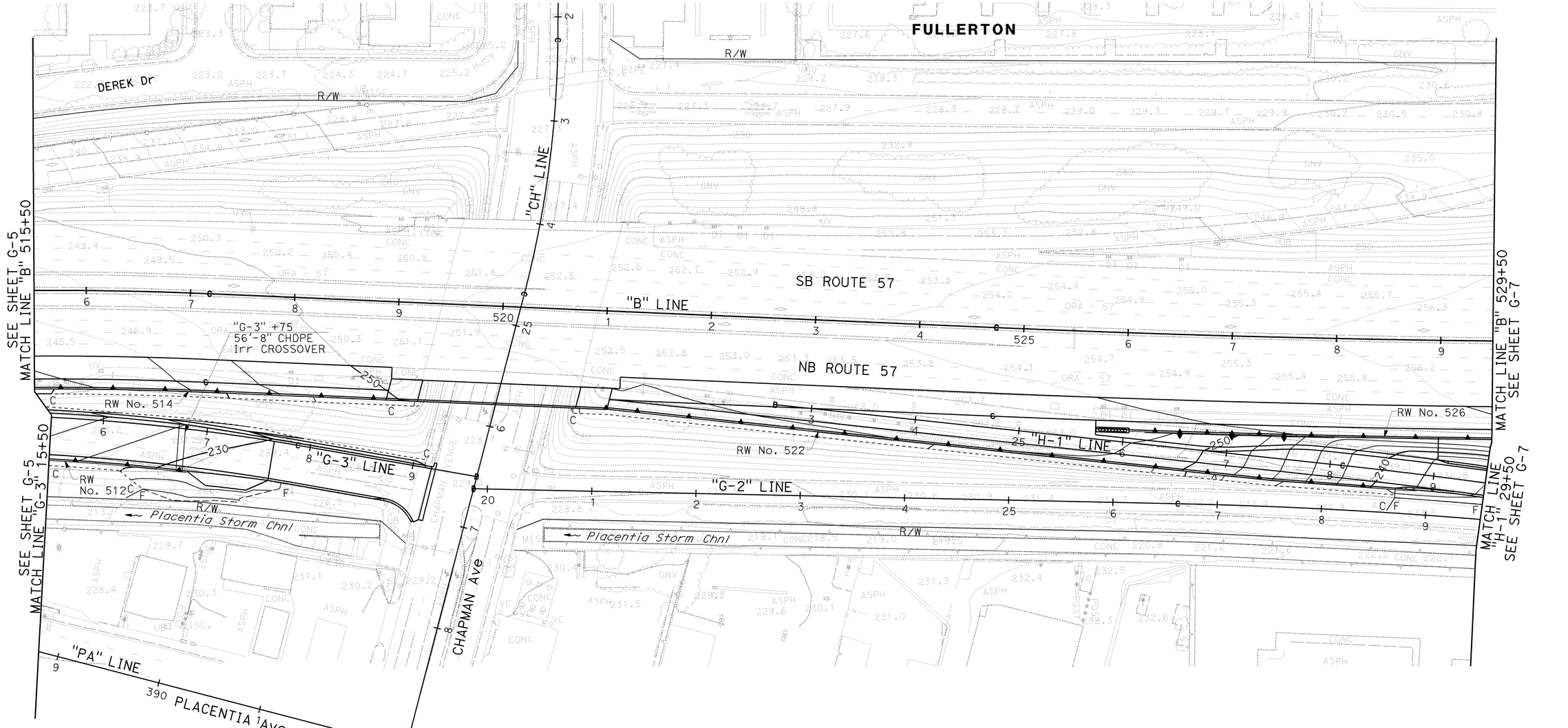

CONTOUR GRADING

SCALE: 1" = 50'

G-6

THIS PLAN ACCURATE FOR CONTOUR GRADING WORK ONLY.

H:\pdata\10105878\Admin\submittals\2009-07-15 FINAL Electronic-Only Submittal\DGN\manguye\PLOT Files\c0F031ha006-20090709 SUBMITTAL SUBMITTAL \c0F031ha006.dgn

STATE OF CALIFORNIA - DEPARTMENT OF TRANSPORTATION | CONSULTANT FUNCTIONAL SUPERVISOR: GONZALO PEÑA | CALCULATED-DESIGNED BY: SUSAN POMERLEAU | CHECKED BY: JOSUE VAGLIENTY | REVISED BY | DATE REVISED

LAST REVISION: DATE PLOTTED => 16-DEC-2009 TIME PLOTTED => 07:14 — 08-01-08

BORDER LAST REVISED 4/11/2008 | RELATIVE BORDER SCALE IS IN INCHES 0 1 2 3 | USERNAME => trmnguye DGN FILE => c0F031ha006.dgn | CU 12220 | EA 0F0311

Dist	COUNTY	ROUTE	POST MILES TOTAL PROJECT	SHEET No.	TOTAL SHEETS
12	Ora	57	16.2/18.6	122	960

REGISTERED CIVIL ENGINEER 7/15/09 DATE

12-14-09
PLANS APPROVAL DATE

REGISTERED PROFESSIONAL ENGINEER JOSUE J. VAGLIENTY No. 70783 Exp. 6-30-11 CIVIL STATE OF CALIFORNIA

THE STATE OF CALIFORNIA OR ITS OFFICERS OR AGENTS SHALL NOT BE RESPONSIBLE FOR THE ACCURACY OR COMPLETENESS OF SCANNED COPIES OF THIS PLAN SHEET.

RBF CONSULTING
14275 ALTON PKWY
IRVINE, CA 92618

OCTA
550 S. MAIN STREET
ORANGE, CA 92863

NOTE:

FOR COMPLETE RIGHT OF WAY AND ACCURATE ACCESS DATA, SEE RIGHT OF WAY RECORD MAPS AT DISTRICT OFFICE.

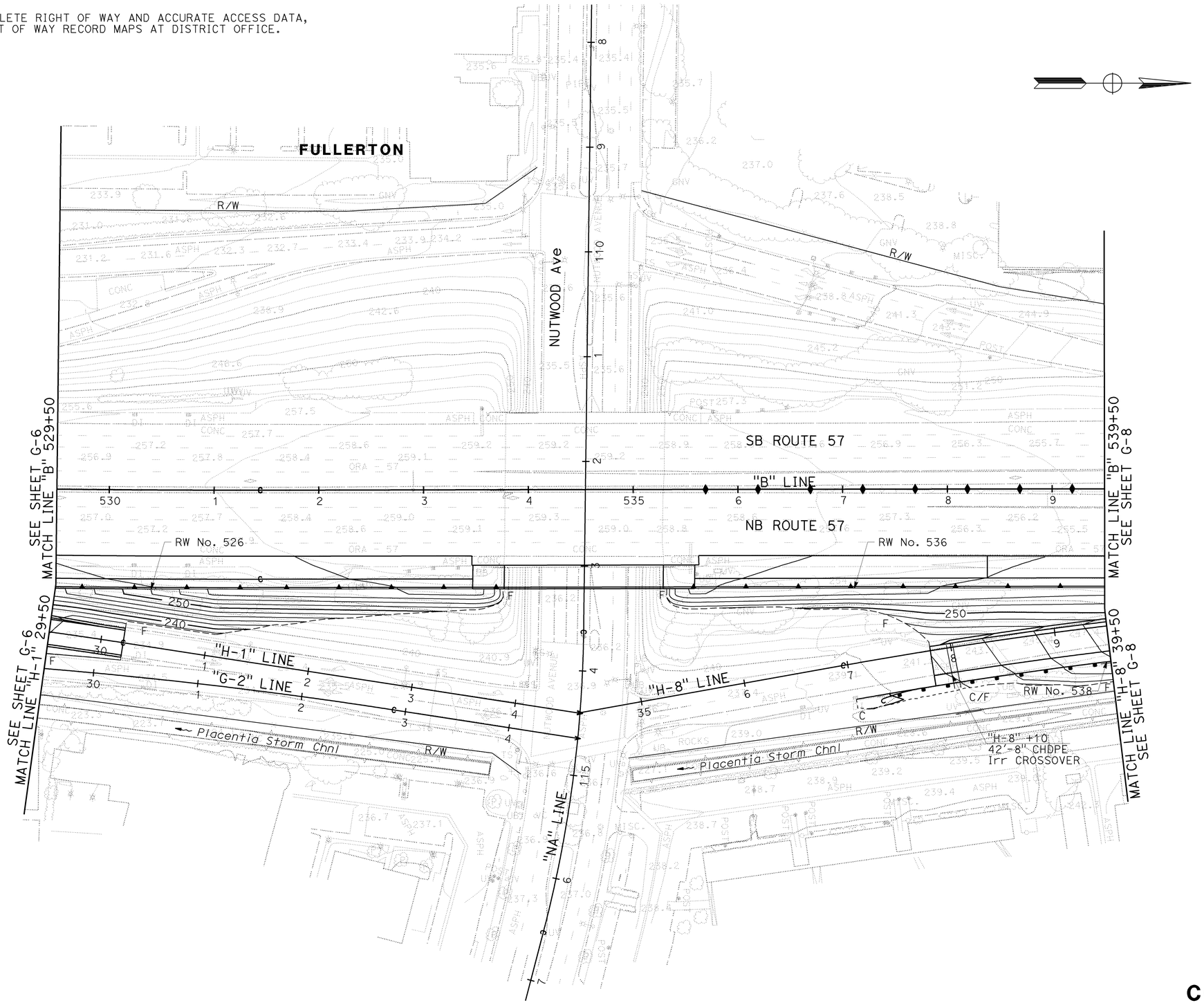

CONTOUR GRADING

SCALE: 1" = 50'

G-7

THIS PLAN ACCURATE FOR CONTOUR GRADING WORK ONLY.

STATE OF CALIFORNIA - DEPARTMENT OF TRANSPORTATION
Caltrans

CONSULTANT FUNCTIONAL SUPERVISOR: GONZALO PEÑA
CALCULATED-DESIGNED BY: SUSAN POMERLEAU
CHECKED BY: JOSUE VAGLIENTY
REVISED BY
DATE REVISED

H:\pdata\10105878\Admin\submittals\2009-07-15 FINAL Electronic-Only Submittal\DGN\rmnguye\PLOT Files\2009-07-15 FINAL SUBMITTAL\c0F031ha007.dgn

LAST REVISION 08-01-08
DATE PLOTTED => 16-DEC-2009
TIME PLOTTED => 07:14

NOTE:

FOR COMPLETE RIGHT OF WAY AND ACCURATE ACCESS DATA,
SEE RIGHT OF WAY RECORD MAPS AT DISTRICT OFFICE.

Dist	COUNTY	ROUTE	POST MILES TOTAL PROJECT	SHEET No.	TOTAL SHEETS
12	Ora	57	16.2/18.6	123	960

REGISTERED CIVIL ENGINEER — DATE 7/15/09

JOSUE J. VAGLIENTY No. 70783 Exp. 6-30-11 CIVIL — REGISTERED PROFESSIONAL ENGINEER — STATE OF CALIFORNIA

12-14-09
PLANS APPROVAL DATE

THE STATE OF CALIFORNIA OR ITS OFFICERS OR AGENTS SHALL NOT BE RESPONSIBLE FOR THE ACCURACY OR COMPLETENESS OF SCANNED COPIES OF THIS PLAN SHEET.

RBF CONSULTING
14275 ALTON PKWY
IRVINE, CA 92618

OCTA
550 S. MAIN STREET
ORANGE, CA 92863

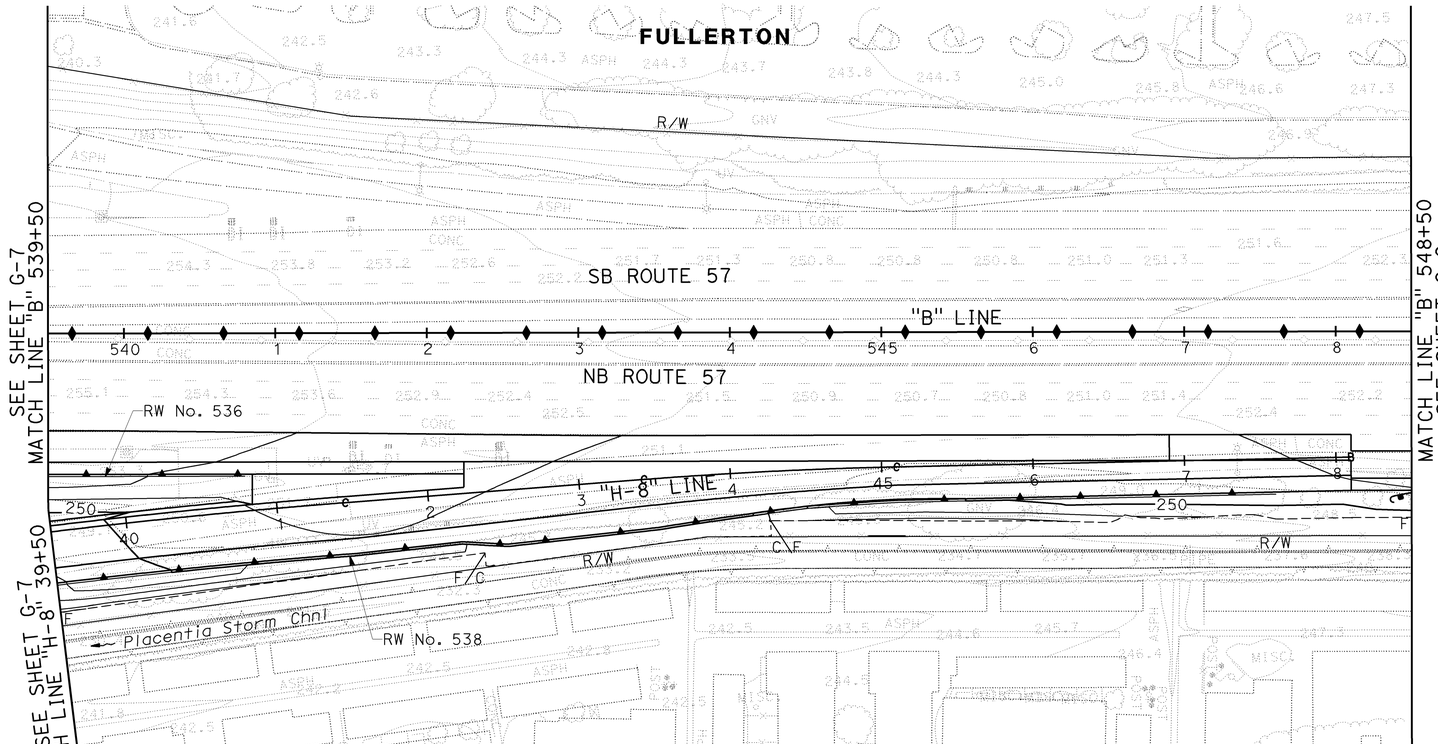

CONTOUR GRADING

SCALE: 1" = 50'

G-8

THIS PLAN ACCURATE FOR CONTOUR GRADING WORK ONLY.

STATE OF CALIFORNIA - DEPARTMENT OF TRANSPORTATION
CONSULTANT FUNCTIONAL SUPERVISOR: GONZALO PEÑA
CALCULATED-DESIGNED BY: SUSAN POMERLEAU
CHECKED BY: JOSUE VAGLIENTY
REVISED BY | DATE REVISED

LAST REVISION | DATE PLOTTED => 16-DEC-2009
08-01-08 | TIME PLOTTED => 07:14

H:\pdata\1010587B\Admin\submittals\2009-07-15 FINAL Electronic-Only Submittal\DGN\ranguye_C0F031ha008_20091207_07F.DGN SUBMITTAL \c0F031ha008.dgn

BORDER LAST REVISED 4/11/2008 | RELATIVE BORDER SCALE IS IN INCHES 0 1 2 3 | USERNAME => trmnguye | DGN FILE => c0F031ha008.dgn | CU 12220 | EA 0F0311

NOTE:

FOR COMPLETE RIGHT OF WAY AND ACCURATE ACCESS DATA,
SEE RIGHT OF WAY RECORD MAPS AT DISTRICT OFFICE.

Dist	COUNTY	ROUTE	POST MILES TOTAL PROJECT	SHEET No.	TOTAL SHEETS
12	Ora	57	16.2/18.6	124	960

REGISTERED CIVIL ENGINEER — 7/15/09 DATE

JOSUE J. VAGLIENTY No. 70783 Exp. 6-30-11 CIVIL — REGISTERED PROFESSIONAL ENGINEER — STATE OF CALIFORNIA

12-14-09
PLANS APPROVAL DATE

THE STATE OF CALIFORNIA OR ITS OFFICERS OR AGENTS SHALL NOT BE RESPONSIBLE FOR THE ACCURACY OR COMPLETENESS OF SCANNED COPIES OF THIS PLAN SHEET.

RBF CONSULTING
14275 ALTON PKWY
IRVINE, CA 92618

OCTA
550 S. MAIN STREET
ORANGE, CA 92863

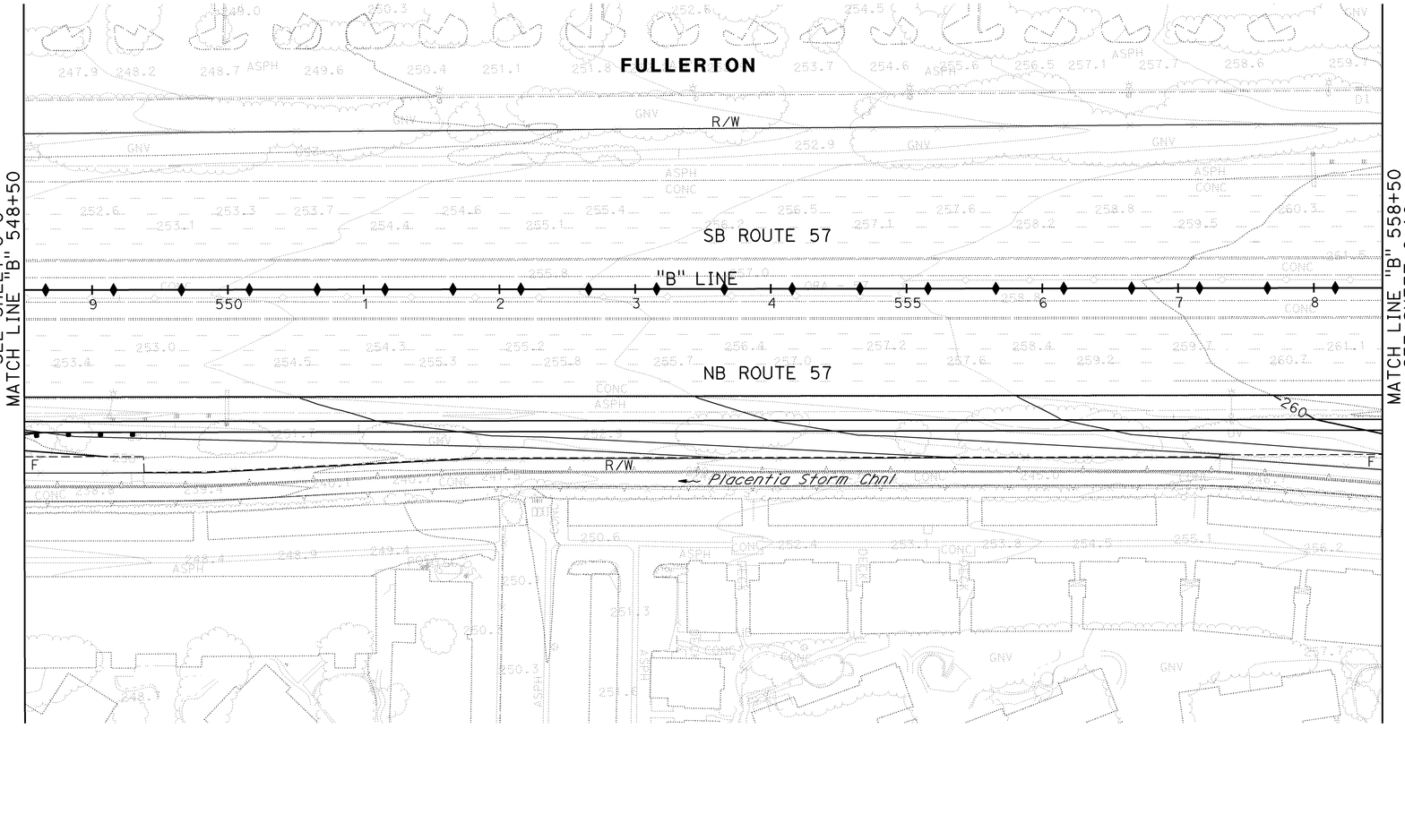

CONTOUR GRADING

SCALE: 1" = 50'

G-9

THIS PLAN ACCURATE FOR CONTOUR GRADING WORK ONLY.

STATE OF CALIFORNIA - DEPARTMENT OF TRANSPORTATION | CONSULTANT FUNCTIONAL SUPERVISOR: GONZALO PEÑA | CALCULATED-DESIGNED BY: SUSAN POMERLEAU | CHECKED BY: JOSUE VAGLIENTY | REVISED BY | DATE REVISED

H:\pdata\10105878\Admin\submittals\2009-07-15 FINAL Electronic-Only Submittal\DGN\rangguye
File:c0F031ha009.dgn 07-15-2009 07:14:
FINAL SUBMITTAL\c0F031ha009.dgn

LAST REVISION | DATE PLOTTED => 16-DEC-2009 | TIME PLOTTED => 07:14
08-01-08

BORDER LAST REVISED 4/11/2008 | RELATIVE BORDER SCALE IS IN INCHES 0 1 2 3 | USERNAME => trmnguye | DGN FILE => c0F031ha009.dgn | CU 12220 | EA 0F0311

NOTE:

FOR COMPLETE RIGHT OF WAY AND ACCURATE ACCESS DATA,
SEE RIGHT OF WAY RECORD MAPS AT DISTRICT OFFICE.

Dist	COUNTY	ROUTE	POST MILES TOTAL PROJECT	SHEET No.	TOTAL SHEETS
12	Ora	57	16.2/18.6	125	960

REGISTERED CIVIL ENGINEER — DATE 7/15/09

JOSUE J. VAGLIENTY No. 70783 Exp. 6-30-11 CIVIL — REGISTERED PROFESSIONAL ENGINEER — STATE OF CALIFORNIA

12-14-09
PLANS APPROVAL DATE

THE STATE OF CALIFORNIA OR ITS OFFICERS OR AGENTS SHALL NOT BE RESPONSIBLE FOR THE ACCURACY OR COMPLETENESS OF SCANNED COPIES OF THIS PLAN SHEET.

RBF CONSULTING
14275 ALTON PKWY
IRVINE, CA 92618

OCTA
550 S. MAIN STREET
ORANGE, CA 92863

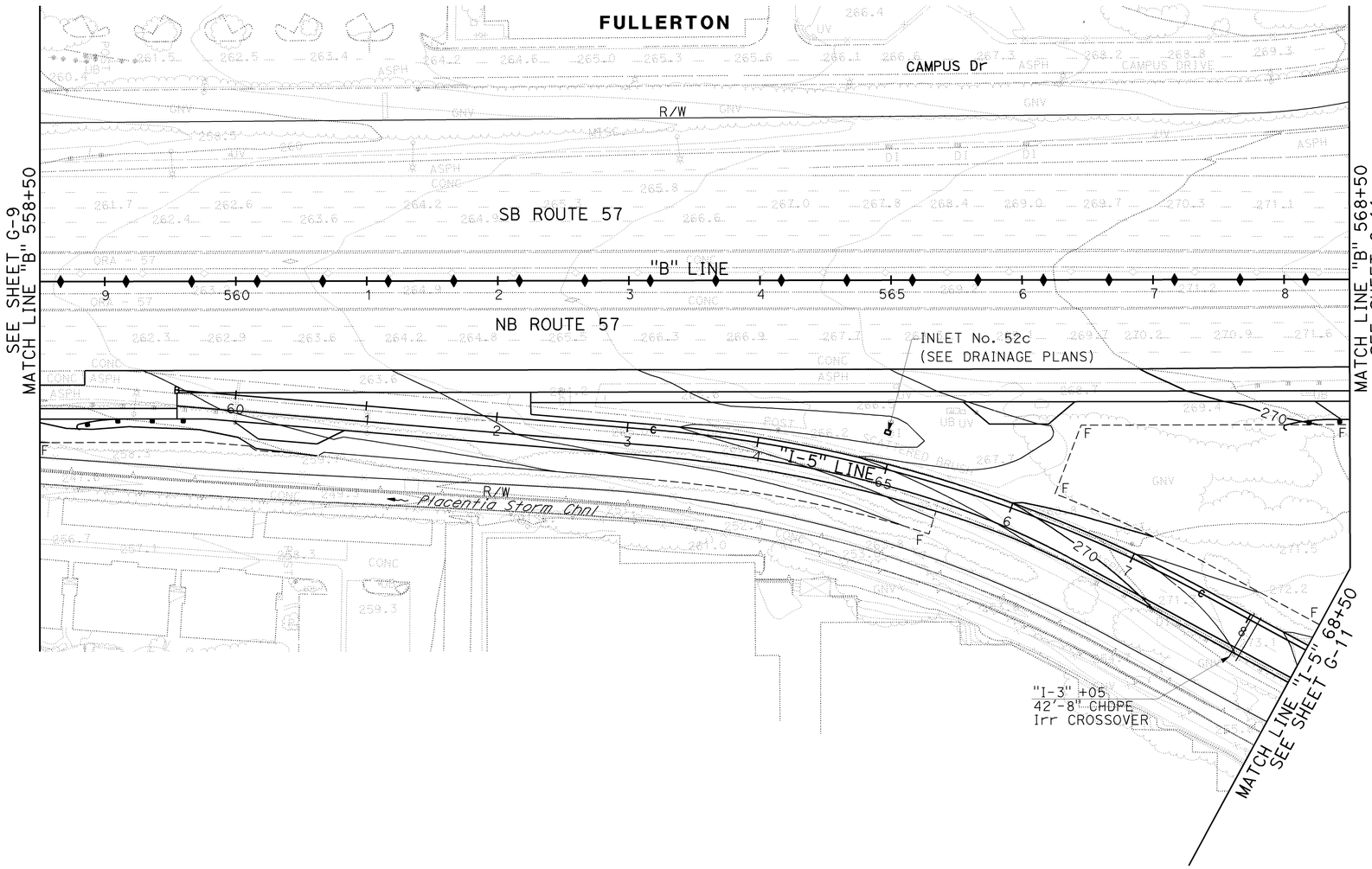

CONTOUR GRADING

SCALE: 1" = 50'

G-10

THIS PLAN ACCURATE FOR CONTOUR GRADING WORK ONLY.

LAST REVISION DATE PLOTTED => 16-DEC-2009
08-01-08 TIME PLOTTED => 07:14

STATE OF CALIFORNIA - DEPARTMENT OF TRANSPORTATION
Caltrans
CONSULTANT FUNCTIONAL SUPERVISOR: GONZALO PEÑA
CALCULATED-DESIGNED BY: SUSAN POMERLEAU
CHECKED BY: JOSUE VAGLIENTY
REVISED BY
DATE REVISED

H:\pdata\10105878\Admin\submittals\2009-07-15 FINAL Electronic-Only Submittal\DGN\anguyeLOT Files 2009-07-15 FINAL SUBMITTAL\c0F031ha010.dgn

BORDER LAST REVISED 4/11/2008
RELATIVE BORDER SCALE IS IN INCHES 0 1 2 3
USERNAME => trmnguye
DGN FILE => c0F031ha010.dgn
CU 12220
EA 0F0311

NOTE:

FOR COMPLETE RIGHT OF WAY AND ACCURATE ACCESS DATA, SEE RIGHT OF WAY RECORD MAPS AT DISTRICT OFFICE.

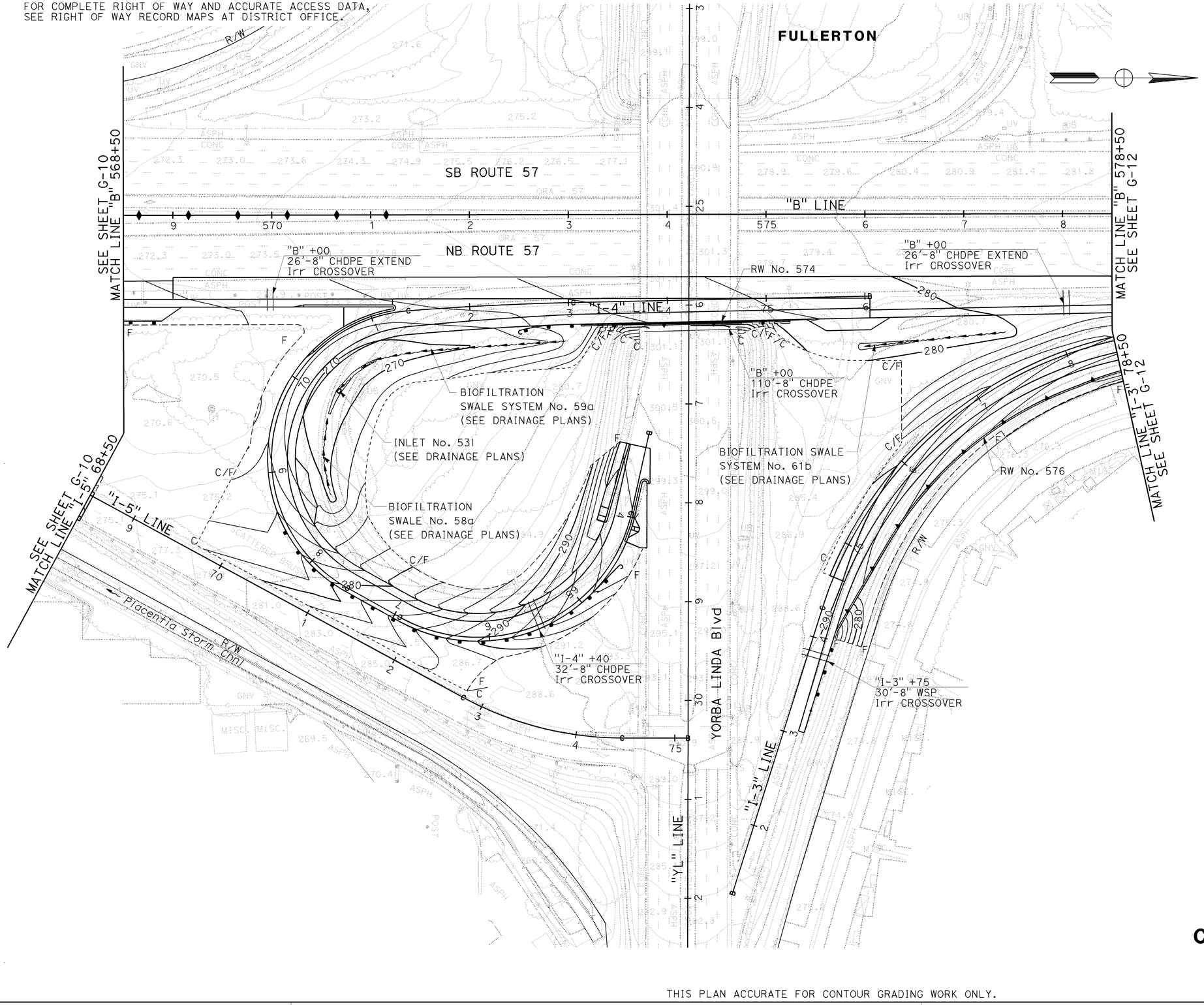

Dist	COUNTY	ROUTE	POST MILES TOTAL PROJECT	SHEET No.	TOTAL SHEETS
12	Ora	57	16.2/18.6	126	960

REGISTERED CIVIL ENGINEER — DATE 7/15/09

JOSUE J. VAGLIENTY No. 70783 Exp. 6-30-11 CIVIL — REGISTERED PROFESSIONAL ENGINEER — STATE OF CALIFORNIA

12-14-09
PLANS APPROVAL DATE

THE STATE OF CALIFORNIA OR ITS OFFICERS OR AGENTS SHALL NOT BE RESPONSIBLE FOR THE ACCURACY OR COMPLETENESS OF SCANNED COPIES OF THIS PLAN SHEET.

RBF CONSULTING
14275 ALTON PKWY
IRVINE, CA 92618

OCTA
550 S. MAIN STREET
ORANGE, CA 92863

CONTOUR GRADING

SCALE: 1" = 50'

G-11

THIS PLAN ACCURATE FOR CONTOUR GRADING WORK ONLY.

STATE OF CALIFORNIA - DEPARTMENT OF TRANSPORTATION

CONSULTANT FUNCTIONAL SUPERVISOR: GONZALO PEÑA

CALCULATED-DESIGNED BY: SUSAN POMERLEAU

CHECKED BY: JOSUE VAGLIENTY

REVISED BY

DATE REVISED

LAST REVISION: DATE PLOTTED => 16-DEC-2009 TIME PLOTTED => 07:14

08-01-08

H:\pdata\10105878\Admin\submittals\2009-07-15 FINAL Electronic-Only Submittal\DGN\rangu_YL.OT File:c0F031ha011.dgn 16-DEC-2009 07:14 FINAL SUBMITTAL

BORDER LAST REVISED 4/11/2008

RELATIVE BORDER SCALE IS IN INCHES 0 1 2 3

USERNAME => trmnguye
DGN FILE => c0F031ha011.dgn

CU 12220

EA 0F0311

NOTE:

FOR COMPLETE RIGHT OF WAY AND ACCURATE ACCESS DATA,
SEE RIGHT OF WAY RECORD MAPS AT DISTRICT OFFICE.

Dist	COUNTY	ROUTE	POST MILES TOTAL PROJECT	SHEET No.	TOTAL SHEETS
12	Ora	57	16.2/18.6	127	960

REGISTERED CIVIL ENGINEER — DATE 7/15/09

12-14-09
PLANS APPROVAL DATE

REGISTERED PROFESSIONAL ENGINEER
JOSUE J. VAGLIENTY
No. 70783
Exp. 6-30-11
CIVIL
STATE OF CALIFORNIA

THE STATE OF CALIFORNIA OR ITS OFFICERS OR AGENTS SHALL NOT BE RESPONSIBLE FOR THE ACCURACY OR COMPLETENESS OF SCANNED COPIES OF THIS PLAN SHEET.

RBF CONSULTING
14275 ALTON PKWY
IRVINE, CA 92618

OCTA
550 S. MAIN STREET
ORANGE, CA 92863

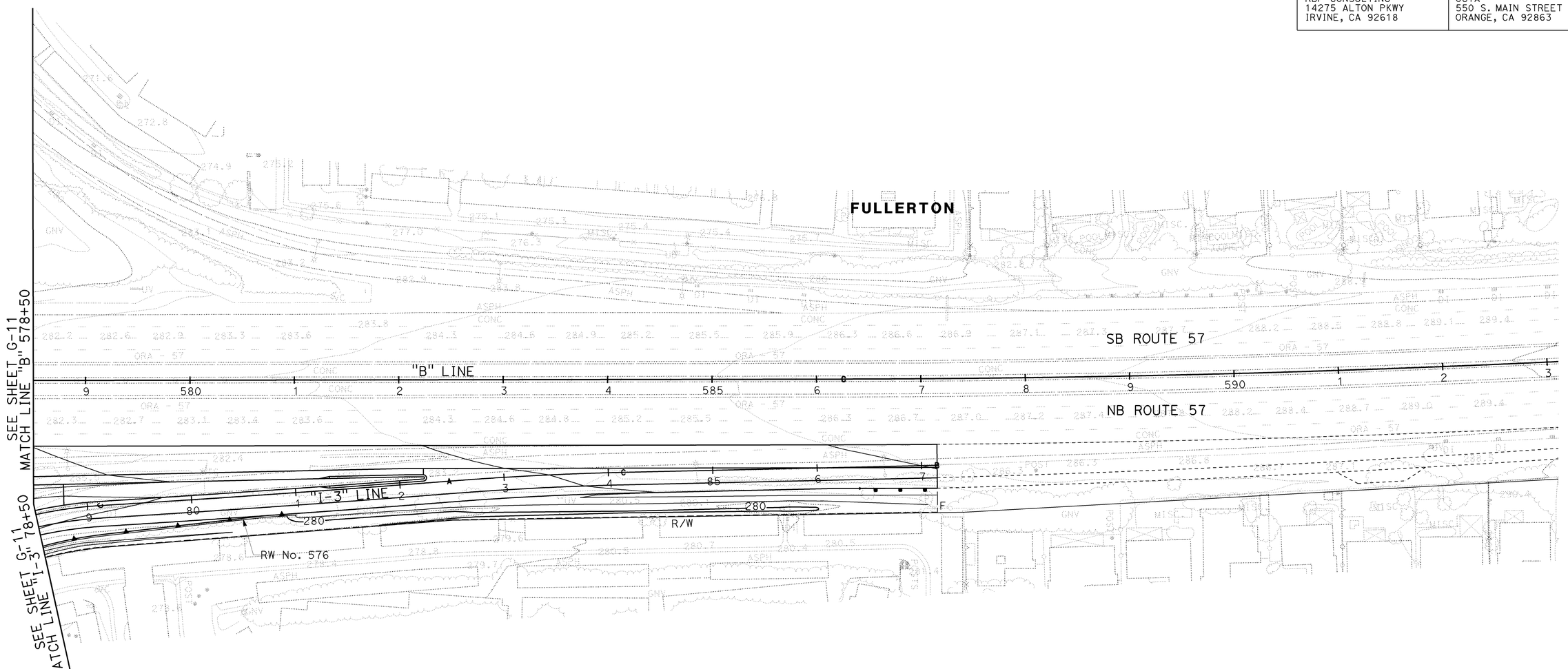

CONTOUR GRADING

SCALE: 1" = 50'

G-12

THIS PLAN ACCURATE FOR CONTOUR GRADING WORK ONLY.

STATE OF CALIFORNIA - DEPARTMENT OF TRANSPORTATION
Caltrans
CONSULTANT FUNCTIONAL SUPERVISOR: GONZALO PEÑA
CALCULATED-DESIGNED BY: SUSAN POMERLEAU
CHECKED BY: JOSUE VAGLIENTY
REVISED BY | DATE REVISED

LAST REVISION: DATE PLOTTED => 16-DEC-2009 | TIME PLOTTED => 07:14 | 08-01-08

H:\pdata\10105878\Admin\submittals\2009-07-15 FINAL Electronic-Only Submittal SUBMITTAL\c0F031ha012.dgn
File: 20090715 FINAL SUBMITTAL\c0F031ha012.dgn

BORDER LAST REVISED 4/11/2008 | RELATIVE BORDER SCALE IS IN INCHES (0 1 2 3) | USERNAME => trmnguye | DGN FILE => c0F031ha012.dgn | CU 12220 | EA 0F0311

NOTES:

1. FOR COMPLETE RIGHT OF WAY AND ACCURATE ACCESS DATA, SEE RIGHT OF WAY RECORD MAPS AT DISTRICT OFFICE.
2. FOR STRUCTURE INFORMATION AND DETAILS, SEE STRUCTURE PLANS.
3. FOR GRADING NOT SHOWN, SEE CONTOUR GRADING SHEET G-5.

Dist	COUNTY	ROUTE	POST MILES TOTAL PROJECT	SHEET No.	TOTAL SHEETS
12	Ora	57	16.2/18.6	128	960

REGISTERED CIVIL ENGINEER — DATE 7/15/09

JOSUE J. VAGLIENTY No. 70783 Exp. 6-30-11 CIVIL — REGISTERED PROFESSIONAL ENGINEER — STATE OF CALIFORNIA

12-14-09
PLANS APPROVAL DATE

THE STATE OF CALIFORNIA OR ITS OFFICERS OR AGENTS SHALL NOT BE RESPONSIBLE FOR THE ACCURACY OR COMPLETENESS OF SCANNED COPIES OF THIS PLAN SHEET.

RBF CONSULTING
14275 ALTON PKWY
IRVINE, CA 92618

OCTA
550 S. MAIN STREET
ORANGE, CA 92863

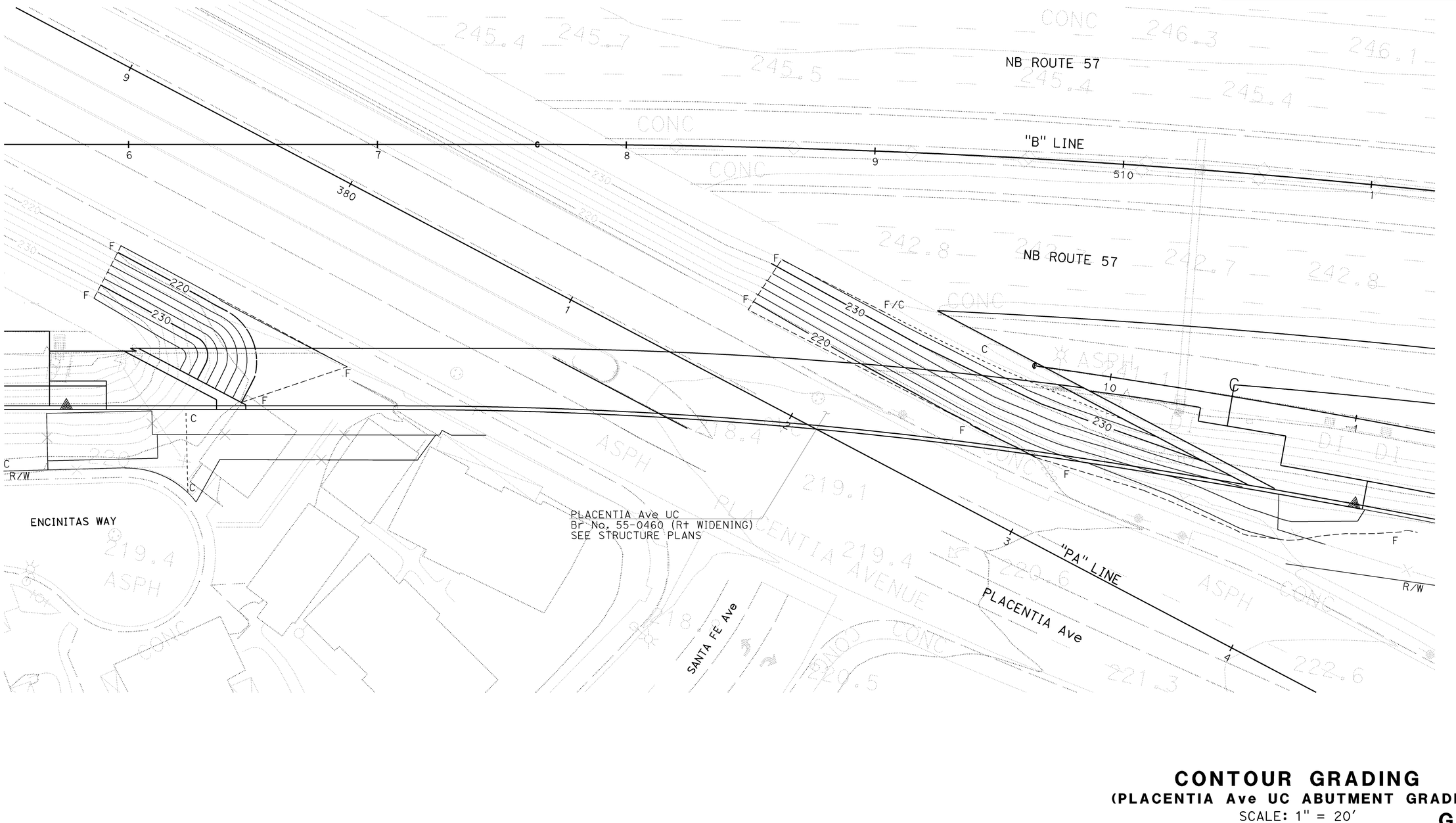

CONTOUR GRADING
(PLACENTIA Ave UC ABUTMENT GRADING)

SCALE: 1" = 20'

G-13

THIS PLAN ACCURATE FOR CONTOUR GRADING WORK ONLY.

STATE OF CALIFORNIA - DEPARTMENT OF TRANSPORTATION | CONSULTANT FUNCTIONAL SUPERVISOR: GONZALO PEÑA | CALCULATED-DESIGNED BY: JOHN CURTIS | CHECKED BY: JOSUE VAGLIENTY | REVISED BY | DATE REVISED

H:\pdata\10105878\Admin\submittals\2009-07-15 FINAL Electronic-Only Submittal\DGN\rangguye FILOT File=c0F031ha013.dgn 07-15-2009 07:14 FINAL SUBMITTAL \c0F031ha013.dgn

LAST REVISION | DATE PLOTTED => 16-DEC-2009 | TIME PLOTTED => 07:14 | 08-01-08

BORDER LAST REVISED 4/11/2008 | RELATIVE BORDER SCALE IS IN INCHES 0 1 2 3 | USERNAME => trmnguye | DGN FILE => c0F031ha013.dgn | CU 12220 | EA 0F0311

Dist	COUNTY	ROUTE	POST MILES TOTAL PROJECT	SHEET No.	TOTAL SHEETS
12	Ora	57	16.2/18.6	129	960

Richard J. Lucera — REGISTERED CIVIL ENGINEER — 7/15/09 DATE

12-14-09
PLANS APPROVAL DATE

REGISTERED PROFESSIONAL ENGINEER — RICHARD LUCERA — No. 58089 — Exp. 6/30/10 — CIVIL — STATE OF CALIFORNIA

THE STATE OF CALIFORNIA OR ITS OFFICERS OR AGENTS SHALL NOT BE RESPONSIBLE FOR THE ACCURACY OR COMPLETENESS OF SCANNED COPIES OF THIS PLAN SHEET.

RBF CONSULTING
14275 ALTON PKWY
IRVINE, CA 92618

OCTA
550 S. MAIN STREET
ORANGE, CA 92863

NOTE:
FOR COMPLETE R/W AND ACCURATE ACCESS DATA, SEE R/W RECORD MAPS AT DISTRICT OFFICE.

ABBREVIATIONS:

GLD	GRATED LINE DRAIN (WITH PRE-SLOPED INVERT SEE DD-8)
OSD	OVERSIDE DRAIN
TCE	TEMPORARY CONSTRUCTION EASEMENT

DRAINAGE SYS No.	UNIT	OFFSET	STATION	FL Elev	DESCRIPTION
⬡3	ⓒ	30.91′ R+	"T" 67+12.07	203.96	BEGIN Conc DITCH, BEGIN REMOVE DITCH
⬡3	ⓒ	26.36′ R+	"T" 66+95.62	203.84	ANGLE POINT Conc DITCH
⬡3	ⓒ	33.03′ R+	"T" 66+06.61	203.24	ANGLE POINT Conc DITCH
⬡3	ⓒ	28.06′ R+	"T" 64+28.74	202.56	ANGLE POINT Conc DITCH
⬡3	ⓒ	29.14′ R+	"T" 63+53.44	201.42	END Conc DITCH, END REMOVE DITCH

GENERAL DRAINAGE NOTES:

1. HORIZONTAL LOCATIONS OF EXISTING STORM DRAINS ARE BASED ON BEST AVAILABLE INFORMATION. ACTUAL LOCATIONS MAY VARY FROM THOSE SHOWN. CONTRACTOR SHALL VERIFY LOCATIONS AND ELEVATIONS OF ALL UTILITIES AND STORM DRAINS PRIOR TO CONSTRUCTION, AND REPORT ANY MAJOR DISCREPANCIES TO THE ENGINEER.
2. WHERE STORM DRAIN ALTERNATIVE PIPE IS INSTALLED AT 3:1 SLOPE OR STEEPER, AND THE EXTERIOR PROFILE HAS CORRUGATIONS, SLOPE ANCHORS ARE NOT REQUIRED. FOR RCP IN SLOPES 3:1 OR STEEPER, SEE DD-7.
3. MODIFIED G3 INLETS ARE CAST MONOLITHICALLY WITH THE RETAINING WALL BARRIER SLAB PER THE STRUCTURAL PLANS FOR THE MECHANICALLY STABALIZED EMBANKMENT WALLS.

LEGEND:

⬡1 DRAINAGE SYSTEM NO

ⓐ DRAINAGE UNIT NO

* SEE DRAINAGE DETAIL SHEETS

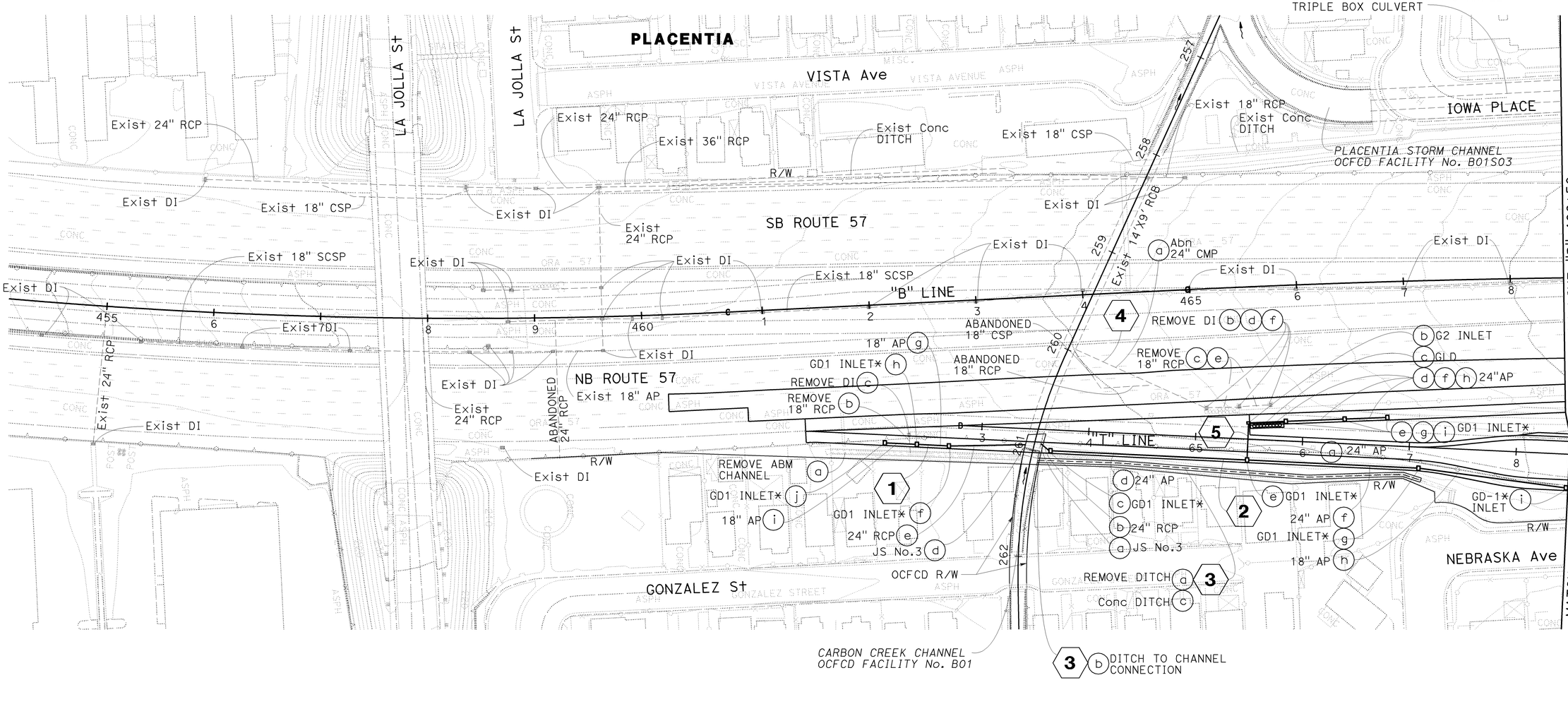

⬡3 (b) DITCH TO CHANNEL CONNECTION

DRAINAGE PLAN

SCALE: 1" = 50′

D-1

THIS PLAN ACCURATE FOR DRAINAGE WORK ONLY

REVISED BY | DATE REVISED
CALCULATED-DESIGNED BY: SCOTT CARTWRIGHT
CHECKED BY: RICHARD LUCERA
CONSULTANT FUNCTIONAL SUPERVISOR: RICHARD LUCERA
STATE OF CALIFORNIA - DEPARTMENT OF TRANSPORTATION
Caltrans

H:\PDATA\10105878\CADD\Strmwater\Div\Merged CADD Files\c0F031ia001.dgn
16-DEC-2009 08:33
trrene

LAST REVISION | DATE PLOTTED => 16-DEC-2009 | TIME PLOTTED => 08:33
08-01-08

BORDER LAST REVISED 4/11/2008 | RELATIVE BORDER SCALE IS IN INCHES 0 1 2 3 | USERNAME => trrene | DGN FILE => c0F031ia001.dgn | CU 12220 | EA 0F0311

NOTE:
FOR COMPLETE R/W AND ACCURATE ACCESS DATA,
SEE R/W RECORD MAPS AT DISTRICT OFFICE.

DRAINAGE SYS No.	UNIT	OFFSET	STATION	FL Elev	DESCRIPTION
8	c	41.86' Rt	"V" 74+80.83	202.91	END BIO-SWALE, BEGIN SWALE TO CHANNEL TRANSITION
8	c	49.47' Rt	"V" 74+35.04	202.41	END SWALE TO CHANNEL TRANSITION, END REMOVE CHANNEL

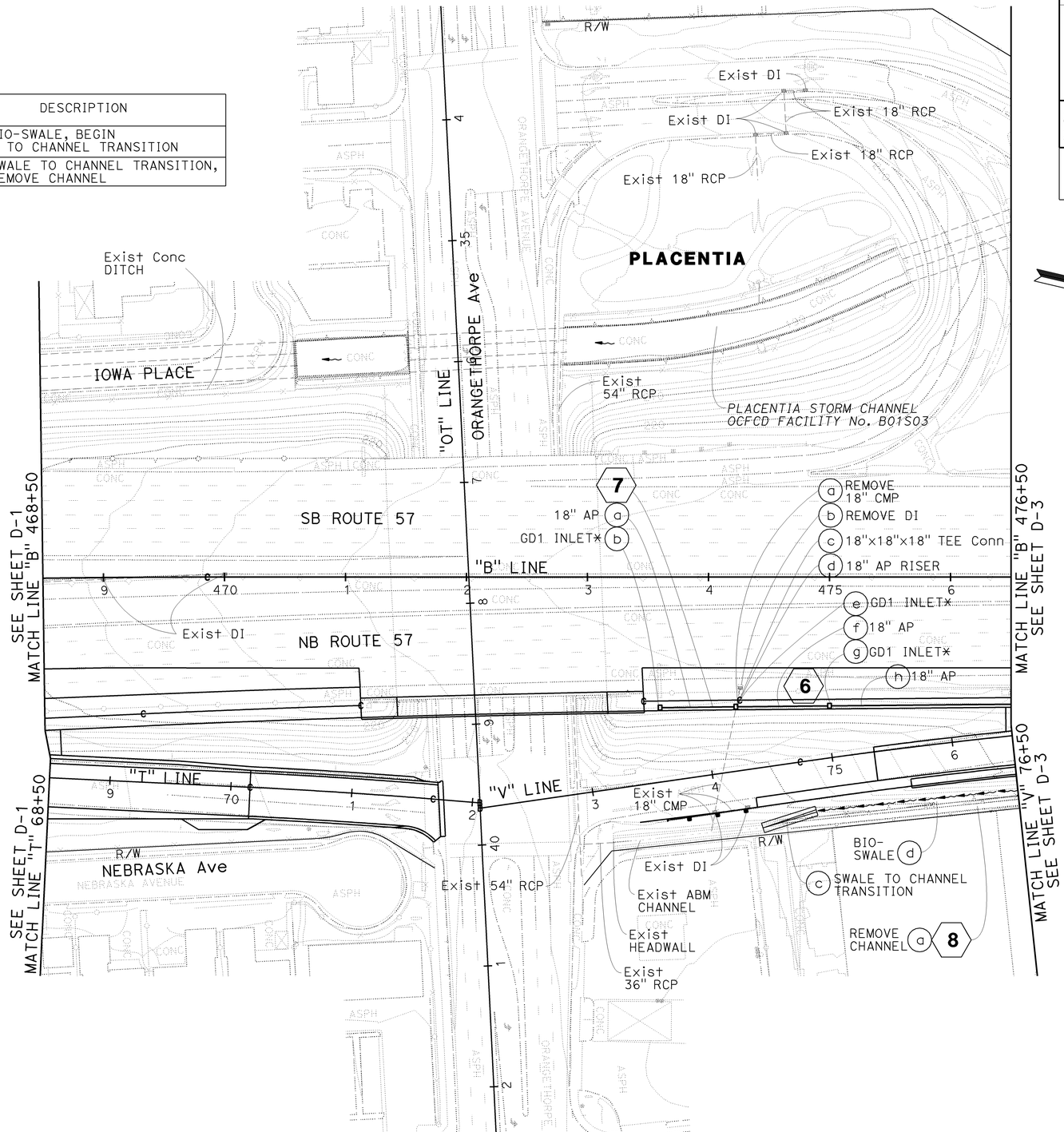

THIS PLAN ACCURATE FOR DRAINAGE WORK ONLY

DRAINAGE PLAN

SCALE: 1" = 50'

D-2

Dist	COUNTY	ROUTE	POST MILES TOTAL PROJECT	SHEET No.	TOTAL SHEETS
12	Ora	57	16.2/18.6	130	960

REGISTERED CIVIL ENGINEER — 7/15/09 DATE

RICHARD LUCERA No. 58089 Exp. 6/30/10 CIVIL — REGISTERED PROFESSIONAL ENGINEER — STATE OF CALIFORNIA

12-14-09
PLANS APPROVAL DATE

THE STATE OF CALIFORNIA OR ITS OFFICERS OR AGENTS SHALL NOT BE RESPONSIBLE FOR THE ACCURACY OR COMPLETENESS OF SCANNED COPIES OF THIS PLAN SHEET.

RBF CONSULTING
14275 ALTON PKWY
IRVINE, CA 92618

OCTA
550 S. MAIN STREET
ORANGE, CA 92863

REVISED BY	DATE REVISED

CALCULATED-DESIGNED BY: SCOTT CARTWRIGHT
CHECKED BY: RICHARD LUCERA
CONSULTANT FUNCTIONAL SUPERVISOR: RICHARD LUCERA
STATE OF CALIFORNIA - DEPARTMENT OF TRANSPORTATION
Caltrans

H:\PDATA\10105878\CADD\Strmwater\Div\Merged CADD Files\c0F031ia002.dgn trrene 16-DEC-2009 08:33

LAST REVISION 08-01-08 DATE PLOTTED => 16-DEC-2009 TIME PLOTTED => 08:33

BORDER LAST REVISED 4/11/2008 | RELATIVE BORDER SCALE IS IN INCHES 0 1 2 3 | USERNAME => trrene DGN FILE => c0F031ia002.dgn | CU 12220 | EA 0F0311

Dist	COUNTY	ROUTE	POST MILES TOTAL PROJECT	SHEET No.	TOTAL SHEETS
12	Ora	57	16.2/18.6	131	960

REGISTERED CIVIL ENGINEER — 12/3/09 DATE

RICHARD LUCERA No. 58089 Exp. 6/30/10 CIVIL — REGISTERED PROFESSIONAL ENGINEER — STATE OF CALIFORNIA

12-14-09
PLANS APPROVAL DATE

THE STATE OF CALIFORNIA OR ITS OFFICERS OR AGENTS SHALL NOT BE RESPONSIBLE FOR THE ACCURACY OR COMPLETENESS OF SCANNED COPIES OF THIS PLAN SHEET.

RBF CONSULTING
14275 ALTON PKWY
IRVINE, CA 92618

OCTA
550 S. MAIN STREET
ORANGE, CA 92863

NOTE:
FOR COMPLETE R/W AND ACCURATE ACCESS DATA, SEE R/W RECORD MAPS AT DISTRICT OFFICE.

DRAINAGE SYS No.	UNIT	OFFSET	STATION	FL Elev	DESCRIPTION
8	e	40.10′ Rt	"V" 83+22.16	213.13	BEGIN Conc CHANNEL
8	e	45.31′ Rt	"V" 80+00.21	205.91	ANGLE POINT Conc CHANNEL
8	e	47.02′ Rt	"V" 79+00.51	205.21	ANGLE POINT Conc CHANNEL
8	e	52.06′ Rt	"V" 77+00.02	204.00	ANGLE POINT Conc CHANNEL, BEGIN REMOVE CHANNEL
8	e	45.29′ Rt	"V" 76+50.41	203.76	END Conc CHANNEL, BEGIN BIO-SWALE
14	a	149.56′ Rt	"B" 487+86.68	206.30	ANGLE POINT BIO-SWALE
14	a	152.52′ Rt	"B" 486+68.80	202.00	END BIO-SWALE

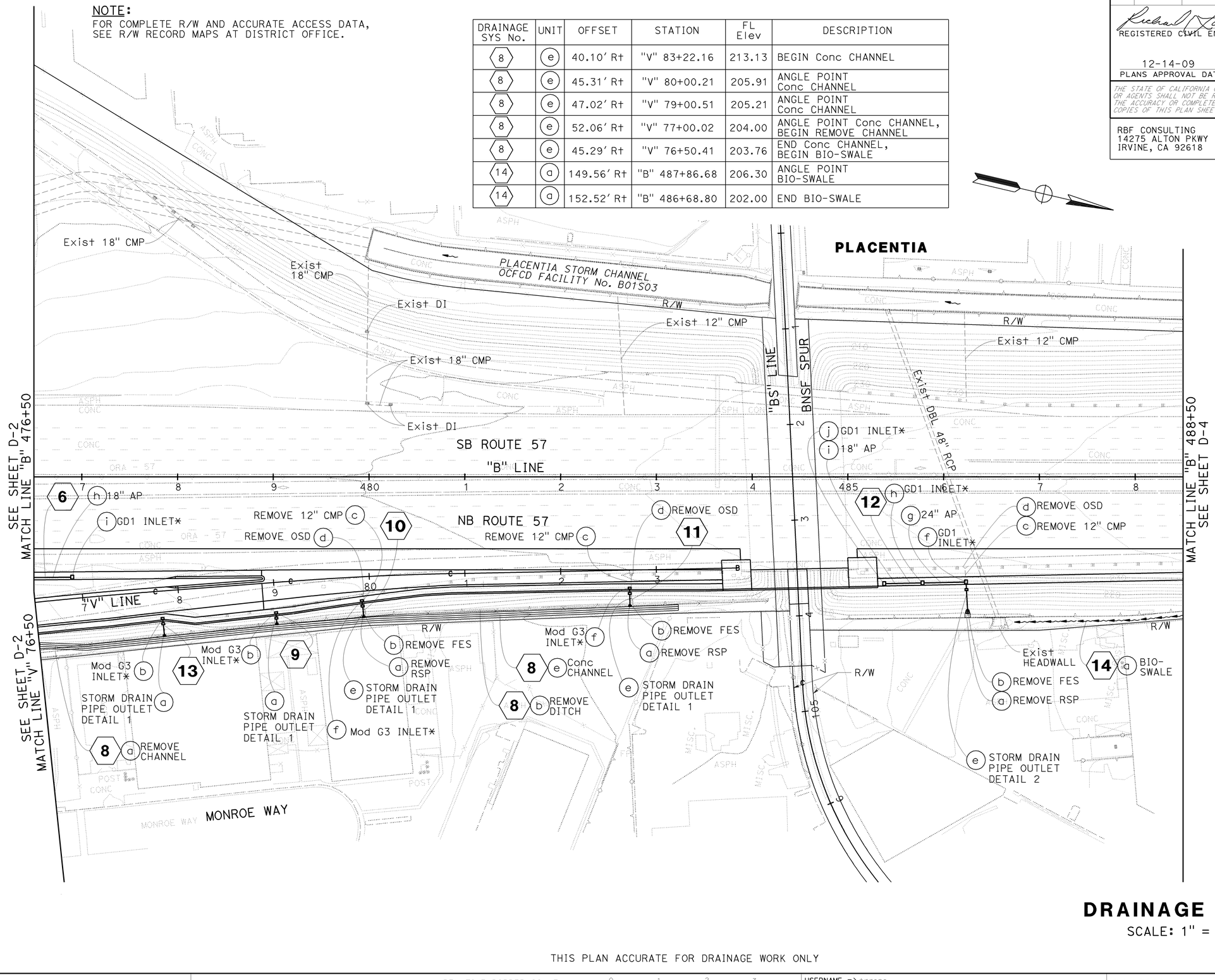

DRAINAGE PLAN

SCALE: 1" = 50′

D-3

THIS PLAN ACCURATE FOR DRAINAGE WORK ONLY

H:\PDATA\10105878\CADD\Strmwater\Div\Merged CADD Files\c0F031ia003.dgn
STATE OF CALIFORNIA - DEPARTMENT OF TRANSPORTATION
CONSULTANT FUNCTIONAL SUPERVISOR: RICHARD LUCERA
CHECKED BY: RICHARD LUCERA
CALCULATED-DESIGNED BY: SCOTT CARTWRIGHT
REVISED BY: JJV
DATE REVISED: 12/3/09
16-DEC-2009 08:33
trrene

LAST REVISION: DATE PLOTTED => 16-DEC-2009 TIME PLOTTED => 08:33
08-01-08

BORDER LAST REVISED 4/11/2008 | RELATIVE BORDER SCALE IS IN INCHES 0 1 2 3 | USERNAME => trrene DGN FILE => c0F031ia003.dgn | CU 12220 | EA 0F0311

Dist	COUNTY	ROUTE	POST MILES TOTAL PROJECT	SHEET No.	TOTAL SHEETS
12	Ora	57	16.2/18.6	132	960

REGISTERED CIVIL ENGINEER — 12/3/09 DATE

RICHARD LUCERA No. 58089 Exp. 6/30/10 CIVIL — REGISTERED PROFESSIONAL ENGINEER — STATE OF CALIFORNIA

12-14-09
PLANS APPROVAL DATE

THE STATE OF CALIFORNIA OR ITS OFFICERS OR AGENTS SHALL NOT BE RESPONSIBLE FOR THE ACCURACY OR COMPLETENESS OF SCANNED COPIES OF THIS PLAN SHEET.

RBF CONSULTING
14275 ALTON PKWY
IRVINE, CA 92618

OCTA
550 S. MAIN STREET
ORANGE, CA 92863

NOTE:
FOR COMPLETE R/W AND ACCURATE ACCESS DATA,
SEE R/W RECORD MAPS AT DISTRICT OFFICE.

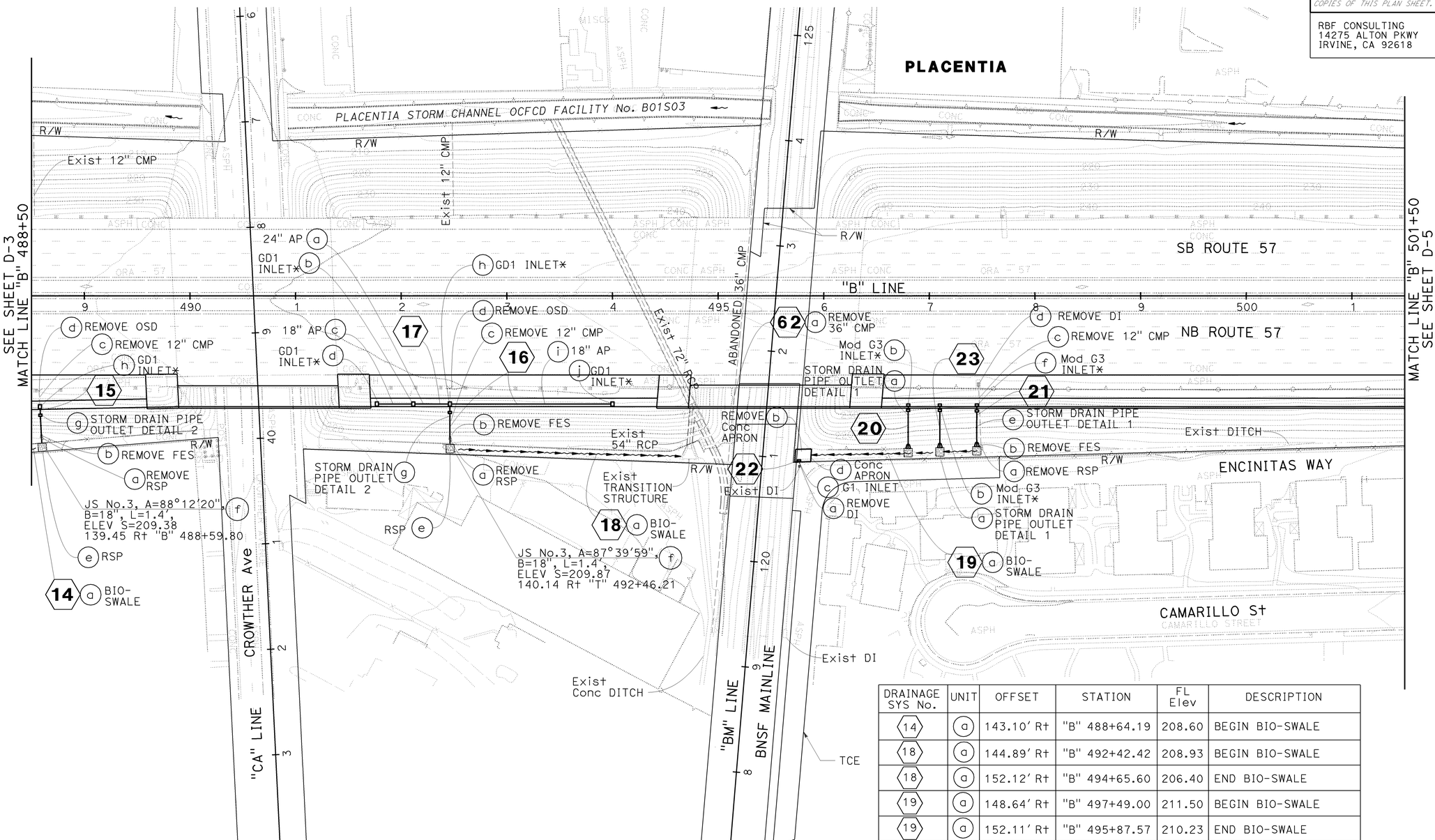

DRAINAGE SYS No.	UNIT	OFFSET	STATION	FL Elev	DESCRIPTION
14	a	143.10' Rt	"B" 488+64.19	208.60	BEGIN BIO-SWALE
18	a	144.89' Rt	"B" 492+42.42	208.93	BEGIN BIO-SWALE
18	a	152.12' Rt	"B" 494+65.60	206.40	END BIO-SWALE
19	a	148.64' Rt	"B" 497+49.00	211.50	BEGIN BIO-SWALE
19	a	152.11' Rt	"B" 495+87.57	210.23	END BIO-SWALE

DRAINAGE PLAN

SCALE: 1" = 50'

THIS PLAN ACCURATE FOR DRAINAGE WORK ONLY

D-4

REVISED BY	DATE REVISED
JJV	12/3/09

CALCULATED-DESIGNED BY: SCOTT CARTWRIGHT
CHECKED BY: RICHARD LUCERA
CONSULTANT FUNCTIONAL SUPERVISOR: RICHARD LUCERA

STATE OF CALIFORNIA - DEPARTMENT OF TRANSPORTATION
Caltrans

H:\PDATA\10105878\CADD\Strmwater\Div\Merged CADD Files\c0F031ia004.dgn
16-DEC-2009 08:34
trrene

LAST REVISION DATE PLOTTED => 16-DEC-2009
TIME PLOTTED => 08:34
08-01-08

BORDER LAST REVISED 4/11/2008
RELATIVE BORDER SCALE IS IN INCHES 0 1 2 3
USERNAME => trrene
DGN FILE => c0F031ia004.dgn
CU 12220
EA 0F0311

Dist	COUNTY	ROUTE	POST MILES TOTAL PROJECT	SHEET No.	TOTAL SHEETS
12	Ora	57	16.2/18.6	133	960

Richard J. Lucera — REGISTERED CIVIL ENGINEER — 12/3/09 DATE

12-14-09
PLANS APPROVAL DATE

RICHARD LUCERA No. 58089 Exp. 6/30/10 CIVIL — REGISTERED PROFESSIONAL ENGINEER — STATE OF CALIFORNIA

THE STATE OF CALIFORNIA OR ITS OFFICERS OR AGENTS SHALL NOT BE RESPONSIBLE FOR THE ACCURACY OR COMPLETENESS OF SCANNED COPIES OF THIS PLAN SHEET.

RBF CONSULTING
14275 ALTON PKWY
IRVINE, CA 92618

OCTA
550 S. MAIN STREET
ORANGE, CA 92863

NOTE:
FOR COMPLETE R/W AND ACCURATE ACCESS DATA, SEE R/W RECORD MAPS AT DISTRICT OFFICE.

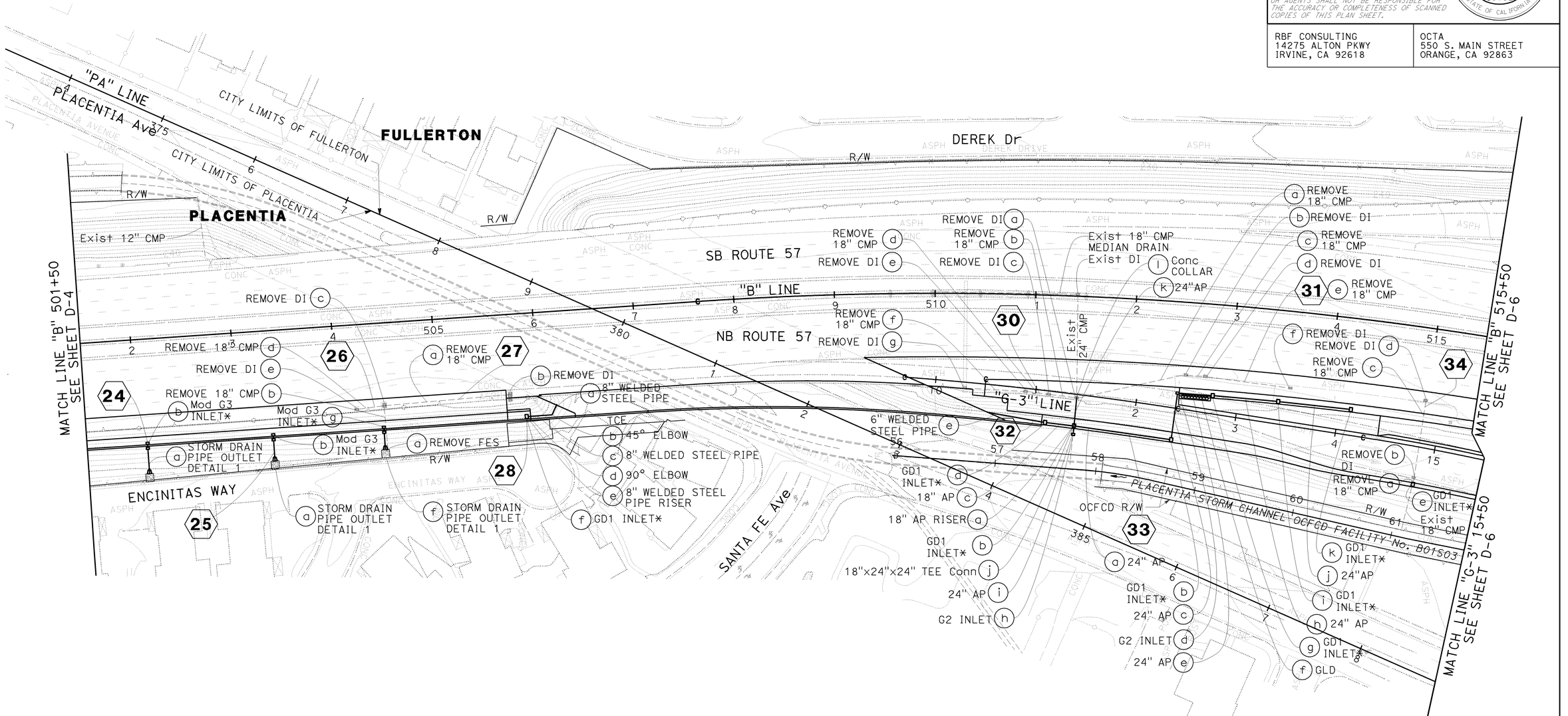

DRAINAGE PLAN

SCALE: 1" = 50'

D-5

THIS PLAN ACCURATE FOR DRAINAGE WORK ONLY

LAST REVISION DATE PLOTTED => 16-DEC-2009
TIME PLOTTED => 08:34
08-01-08

STATE OF CALIFORNIA - DEPARTMENT OF TRANSPORTATION
CONSULTANT FUNCTIONAL SUPERVISOR: RICHARD LUCERA
CALCULATED-DESIGNED BY: SCOTT CARTWRIGHT
CHECKED BY: RICHARD LUCERA
REVISED BY: JJV
DATE REVISED: 12/3/09
16-DEC-2009 08:34
trrene
H:\PDATA\1010587B\CADD\Strmwater\Div\Merged CADD Files\c0F031ia005.dgn

BORDER LAST REVISED 4/11/2008
RELATIVE BORDER SCALE IS IN INCHES 0 1 2 3
USERNAME => trrene
DGN FILE => c0F031ia005.dgn
CU 12220
EA 0F0311

NOTE:
FOR COMPLETE R/W AND ACCURATE ACCESS DATA,
SEE R/W RECORD MAPS AT DISTRICT OFFICE.

Dist	COUNTY	ROUTE	POST MILES TOTAL PROJECT	SHEET No.	TOTAL SHEETS
12	Ora	57	16.2/18.6	134	960

REGISTERED CIVIL ENGINEER — DATE 7/15/09

RICHARD LUCERA No. 58089 Exp. 6/30/10 CIVIL — REGISTERED PROFESSIONAL ENGINEER — STATE OF CALIFORNIA

12-14-09
PLANS APPROVAL DATE

THE STATE OF CALIFORNIA OR ITS OFFICERS OR AGENTS SHALL NOT BE RESPONSIBLE FOR THE ACCURACY OR COMPLETENESS OF SCANNED COPIES OF THIS PLAN SHEET.

RBF CONSULTING
14275 ALTON PKWY
IRVINE, CA 92618

OCTA
550 S. MAIN STREET
ORANGE, CA 92863

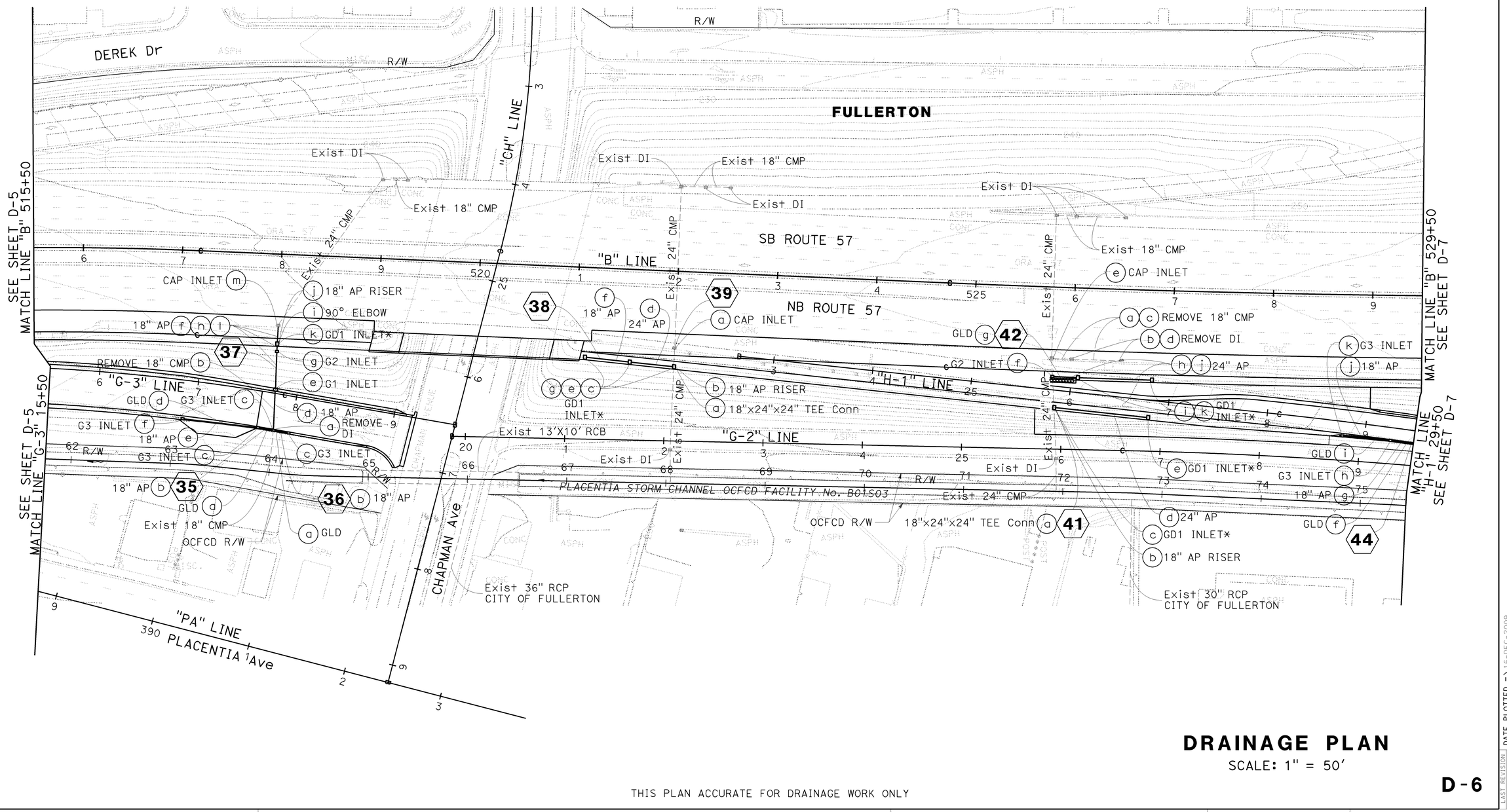

DRAINAGE PLAN

SCALE: 1" = 50'

D-6

THIS PLAN ACCURATE FOR DRAINAGE WORK ONLY

H:\PDATA\10105878\CADD\Strmwater\Div\Merged CADD Files\c0F031ia006.dgn
16-DEC-2009 08:34
trrene
CALCULATED-DESIGNED BY: SCOTT CARTWRIGHT
CHECKED BY: RICHARD LUCERA
CONSULTANT FUNCTIONAL SUPERVISOR: RICHARD LUCERA
REVISED BY
DATE REVISED
STATE OF CALIFORNIA - DEPARTMENT OF TRANSPORTATION
Caltrans
BORDER LAST REVISED 4/11/2008
RELATIVE BORDER SCALE IS IN INCHES 0 1 2 3
USERNAME => trrene
DGN FILE => c0F031ia006.dgn
CU 12220
EA 0F0311
LAST REVISION 08-01-08
DATE PLOTTED => 16-DEC-2009
TIME PLOTTED => 08:34

Dist	COUNTY	ROUTE	POST MILES TOTAL PROJECT	SHEET No.	TOTAL SHEETS
12	Ora	57	16.2/18.6	135	960

Richard Lucera 7/15/09
REGISTERED CIVIL ENGINEER DATE

12-14-09
PLANS APPROVAL DATE

RICHARD LUCERA No. 58089 Exp. 6/30/10 CIVIL — REGISTERED PROFESSIONAL ENGINEER — STATE OF CALIFORNIA

THE STATE OF CALIFORNIA OR ITS OFFICERS OR AGENTS SHALL NOT BE RESPONSIBLE FOR THE ACCURACY OR COMPLETENESS OF SCANNED COPIES OF THIS PLAN SHEET.

RBF CONSULTING
14275 ALTON PKWY
IRVINE, CA 92618

OCTA
550 S. MAIN STREET
ORANGE, CA 92863

NOTE:
FOR COMPLETE R/W AND ACCURATE ACCESS DATA,
SEE R/W RECORD MAPS AT DISTRICT OFFICE.

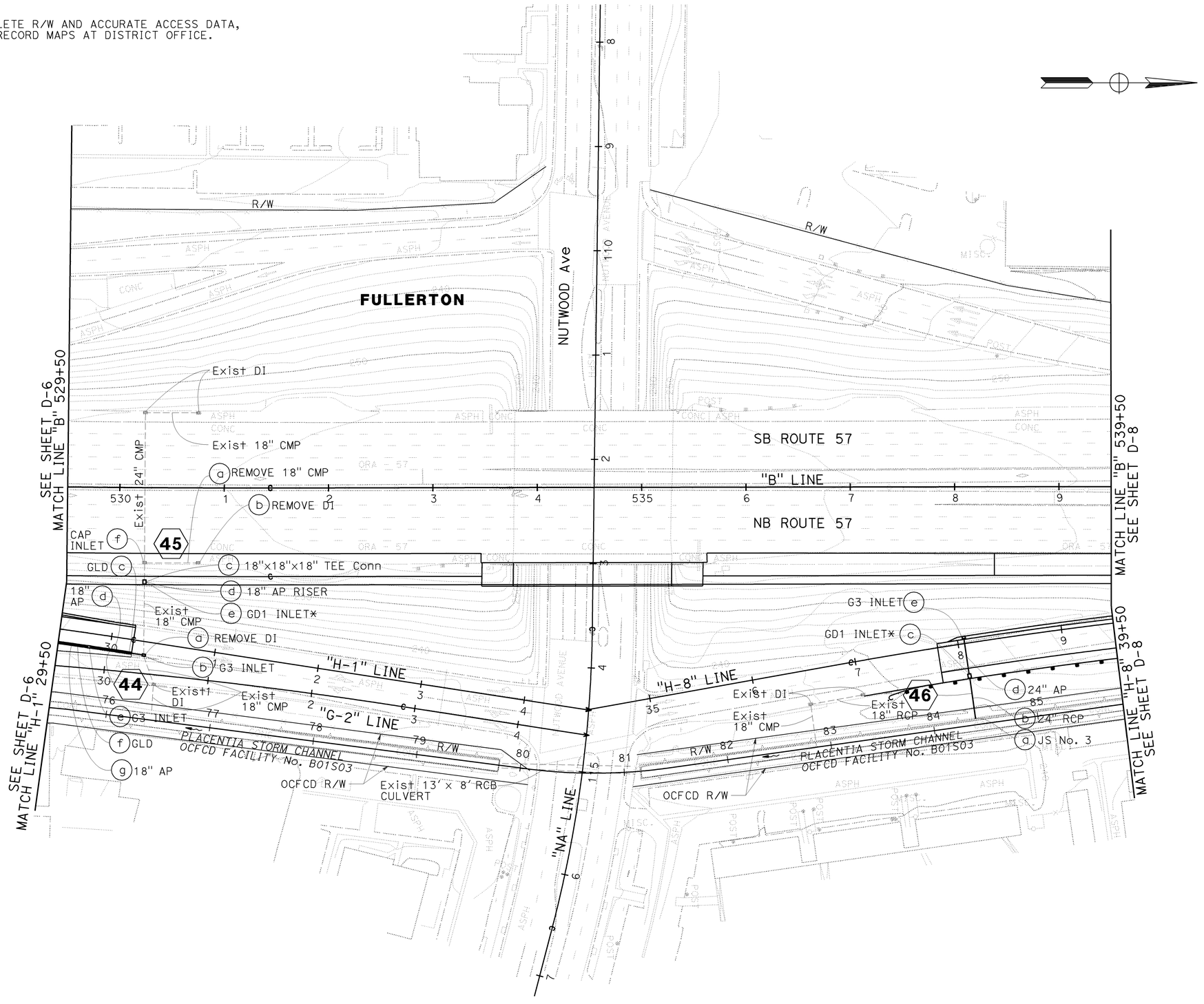

THIS PLAN ACCURATE FOR DRAINAGE WORK ONLY

DRAINAGE PLAN

SCALE: 1" = 50'

D-7

LAST REVISION 08-01-08
DATE PLOTTED => 16-DEC-2009
TIME PLOTTED => 08:34

H:\PDATA\10105878\CADD\Strmwater\Div\Merged CADD Files\c0F031ia007.dgn
STATE OF CALIFORNIA - DEPARTMENT OF TRANSPORTATION
CONSULTANT FUNCTIONAL SUPERVISOR: RICHARD LUCERA
CALCULATED-DESIGNED BY: SCOTT CARTWRIGHT
CHECKED BY: RICHARD LUCERA
REVISED BY
DATE REVISED
16-DEC-2009 08:34
trrene

BORDER LAST REVISED 4/11/2008
RELATIVE BORDER SCALE IS IN INCHES 0 1 2 3
USERNAME => trrene
DGN FILE => c0F031ia007.dgn
CU 12220
EA 0F0311

NOTE:
FOR COMPLETE R/W AND ACCURATE ACCESS DATA,
SEE R/W RECORD MAPS AT DISTRICT OFFICE.

Dist	COUNTY	ROUTE	POST MILES TOTAL PROJECT	SHEET No.	TOTAL SHEETS
12	Ora	57	16.2/18.6	136	960

REGISTERED CIVIL ENGINEER — 7/15/09 DATE

RICHARD LUCERA No. 58089 Exp. 6/30/10 CIVIL — REGISTERED PROFESSIONAL ENGINEER — STATE OF CALIFORNIA

12-14-09
PLANS APPROVAL DATE

THE STATE OF CALIFORNIA OR ITS OFFICERS OR AGENTS SHALL NOT BE RESPONSIBLE FOR THE ACCURACY OR COMPLETENESS OF SCANNED COPIES OF THIS PLAN SHEET.

RBF CONSULTING
14275 ALTON PKWY
IRVINE, CA 92618

OCTA
550 S. MAIN STREET
ORANGE, CA 92863

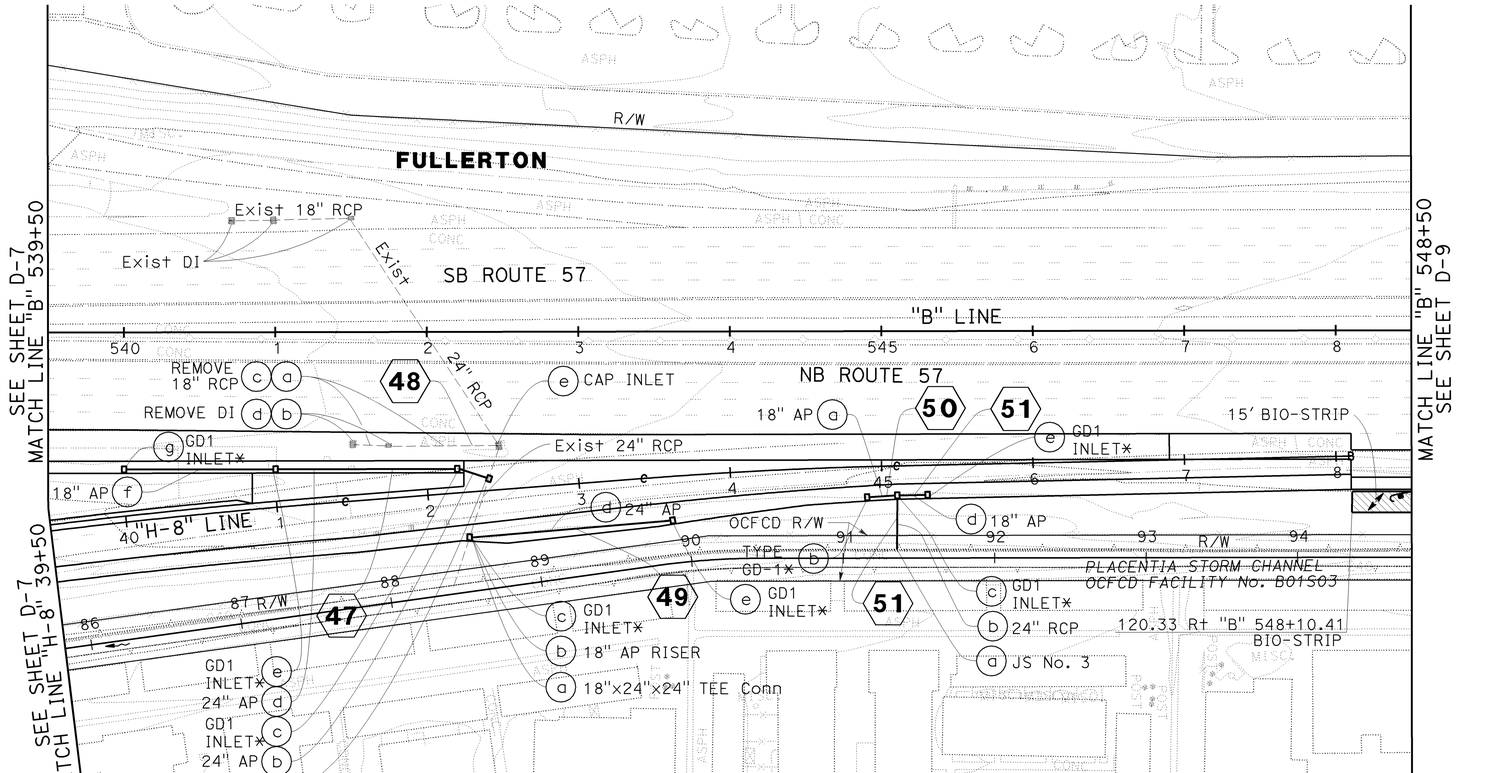

DRAINAGE PLAN

SCALE: 1" = 50'

D-8

THIS PLAN ACCURATE FOR DRAINAGE WORK ONLY

STATE OF CALIFORNIA - DEPARTMENT OF TRANSPORTATION
Caltrans
CONSULTANT FUNCTIONAL SUPERVISOR: RICHARD LUCERA
CALCULATED-DESIGNED BY: SCOTT CARTWRIGHT
CHECKED BY: RICHARD LUCERA
REVISED BY
DATE REVISED
H:\PDATA\10105878\CADD\Strmwater\Div\Merged CADD Files\c0F031ia008.dgn trrene 16-DEC-2009 08:34
BORDER LAST REVISED 4/11/2008
RELATIVE BORDER SCALE IS IN INCHES 0 1 2 3
USERNAME => trrene
DGN FILE => c0F031ia008.dgn
CU 12220
EA 0F0311
LAST REVISION DATE PLOTTED => 16-DEC-2009
TIME PLOTTED => 08:34
08-01-08

NOTE:
FOR COMPLETE R/W AND ACCURATE ACCESS DATA,
SEE R/W RECORD MAPS AT DISTRICT OFFICE.

DRAINAGE SYS No.	UNIT	OFFSET	STATION	FL Elev	DESCRIPTION
63	a	122.00' Rt	"B" 557+30.72	254.56	BEGIN Conc DITCH
63	a	122.00' Rt	"B" 551+79.45	249.96	ANGLE POINT Conc DITCH
63	a	129.51' Rt	"B" 549+38.07	248.03	END Conc DITCH

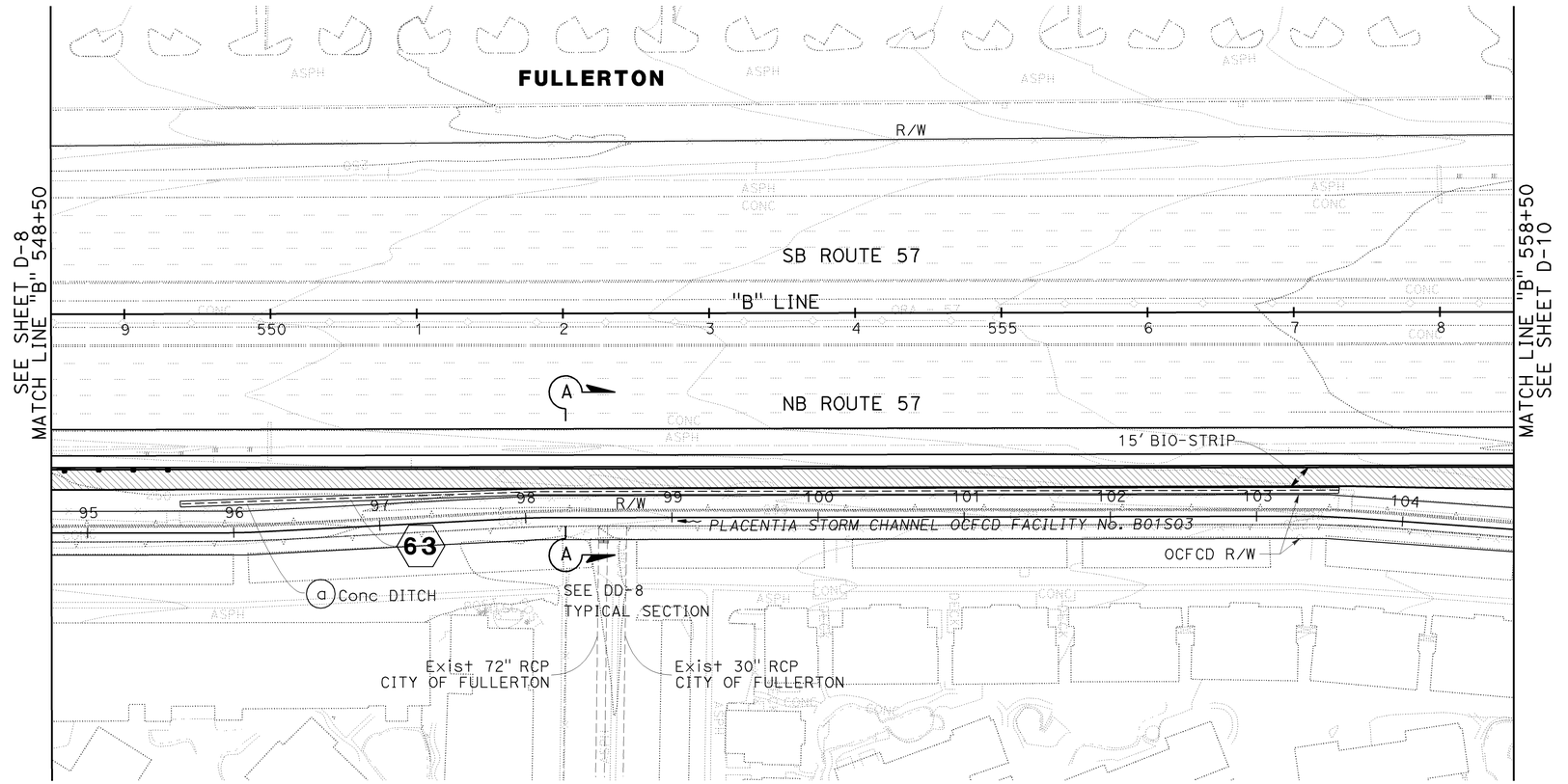

Dist	COUNTY	ROUTE	POST MILES TOTAL PROJECT	SHEET No.	TOTAL SHEETS
12	Ora	57	16.2/18.6	137	960

REGISTERED CIVIL ENGINEER — 12/3/09 DATE

RICHARD LUCERA No. 58089 Exp. 6/30/10 CIVIL — REGISTERED PROFESSIONAL ENGINEER — STATE OF CALIFORNIA

12-14-09
PLANS APPROVAL DATE

THE STATE OF CALIFORNIA OR ITS OFFICERS OR AGENTS SHALL NOT BE RESPONSIBLE FOR THE ACCURACY OR COMPLETENESS OF SCANNED COPIES OF THIS PLAN SHEET.

RBF CONSULTING
14275 ALTON PKWY
IRVINE, CA 92618

OCTA
550 S. MAIN STREET
ORANGE, CA 92863

DRAINAGE PLAN

SCALE: 1" = 50'

D-9

THIS PLAN ACCURATE FOR DRAINAGE WORK ONLY

REVISED BY: JJV — DATE REVISED: 12/3/09
CALCULATED-DESIGNED BY: SCOTT CARTWRIGHT
CHECKED BY: RICHARD LUCERA
CONSULTANT FUNCTIONAL SUPERVISOR: RICHARD LUCERA
STATE OF CALIFORNIA - DEPARTMENT OF TRANSPORTATION

H:\PDATA\10105878\CADD\Srmwater\Div\Merged CADD Files\c0F031ia009.dgn
16-DEC-2009 08:34
trrene

LAST REVISION 08-01-08 — DATE PLOTTED => 16-DEC-2009 — TIME PLOTTED => 08:34

BORDER LAST REVISED 4/11/2008 — RELATIVE BORDER SCALE IS IN INCHES (0 1 2 3) — USERNAME => trrene — DGN FILE => c0F031ia009.dgn — CU 12220 — EA 0F0311

NOTE:
FOR COMPLETE R/W AND ACCURATE ACCESS DATA,
SEE R/W RECORD MAPS AT DISTRICT OFFICE.

Dist	COUNTY	ROUTE	POST MILES TOTAL PROJECT	SHEET No.	TOTAL SHEETS
12	Ora	57	16.2/18.6	138	960

REGISTERED CIVIL ENGINEER — 7/15/09 DATE

RICHARD LUCERA No. 58089 Exp. 6/30/10 CIVIL — REGISTERED PROFESSIONAL ENGINEER — STATE OF CALIFORNIA

12-14-09
PLANS APPROVAL DATE

THE STATE OF CALIFORNIA OR ITS OFFICERS OR AGENTS SHALL NOT BE RESPONSIBLE FOR THE ACCURACY OR COMPLETENESS OF SCANNED COPIES OF THIS PLAN SHEET.

RBF CONSULTING
14275 ALTON PKWY
IRVINE, CA 92618

OCTA
550 S. MAIN STREET
ORANGE, CA 92863

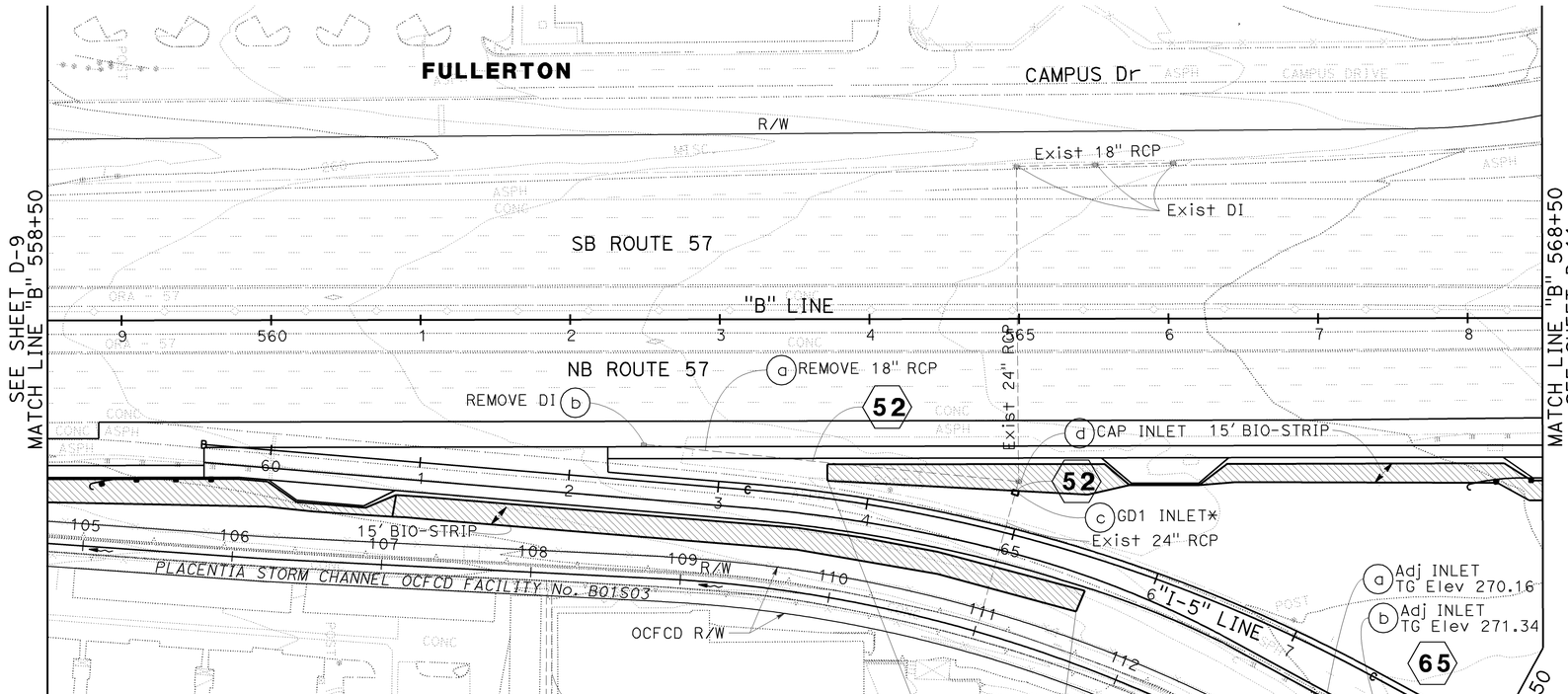

DRAINAGE PLAN

SCALE: 1" = 50'

D-10

THIS PLAN ACCURATE FOR DRAINAGE WORK ONLY

H:\PDATA\10105878\CADD\Strmwater\Div\Merged CADD Files\c0F031ig010.dgn 16-DEC-2009 08:34 trrene

REVISED BY	DATE REVISED

CALCULATED-DESIGNED BY: SCOTT CARTWRIGHT
CHECKED BY: RICHARD LUCERA
CONSULTANT FUNCTIONAL SUPERVISOR: RICHARD LUCERA
STATE OF CALIFORNIA - DEPARTMENT OF TRANSPORTATION

LAST REVISION 08-01-08 DATE PLOTTED => 16-DEC-2009 TIME PLOTTED => 08:34

BORDER LAST REVISED 4/11/2008 | RELATIVE BORDER SCALE IS IN INCHES 0 1 2 3 | USERNAME => trrene DGN FILE => c0F031ig010.dgn | CU 12220 | EA 0F0311

Dist	COUNTY	ROUTE	POST MILES TOTAL PROJECT	SHEET No.	TOTAL SHEETS
12	Ora	57	16.2/18.6	139	960

Richard Lucera 7/15/09
REGISTERED CIVIL ENGINEER DATE

RICHARD LUCERA No. 58089 Exp. 6/30/10 CIVIL — REGISTERED PROFESSIONAL ENGINEER — STATE OF CALIFORNIA

12-14-09
PLANS APPROVAL DATE

THE STATE OF CALIFORNIA OR ITS OFFICERS OR AGENTS SHALL NOT BE RESPONSIBLE FOR THE ACCURACY OR COMPLETENESS OF SCANNED COPIES OF THIS PLAN SHEET.

RBF CONSULTING
14275 ALTON PKWY
IRVINE, CA 92618

OCTA
550 S. MAIN STREET
ORANGE, CA 92863

NOTE:
FOR COMPLETE R/W AND ACCURATE ACCESS DATA, SEE R/W RECORD MAPS AT DISTRICT OFFICE.

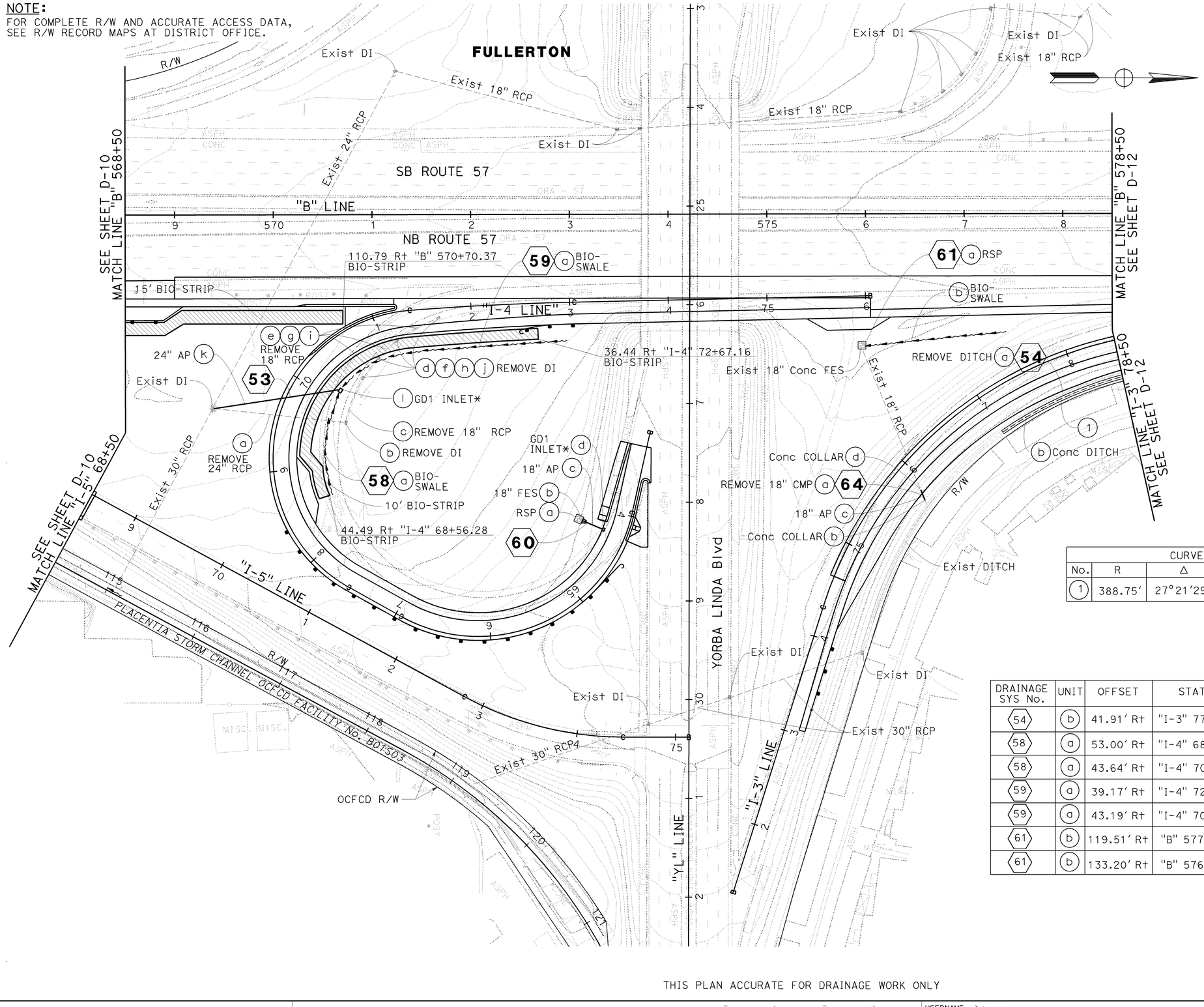

CURVE DATA				
No.	R	Δ	L	T
(1)	388.75′	27°21′29"	185.62′	94.62′

DRAINAGE SYS No.	UNIT	OFFSET	STATION	FL Elev	DESCRIPTION
54	(b)	41.91′ Rt	"I-3" 77+00.65	276.49	END Conc DITCH, END REMOVE DITCH
58	(a)	53.00′ Rt	"I-4" 68+54.60	269.34	BEGIN BIO-SWALE
58	(a)	43.64′ Rt	"I-4" 70+15.54	267.64	END BIO-SWALE
59	(a)	39.17′ Rt	"I-4" 72+87.56	272.50	BEGIN BIO-SWALE
59	(a)	43.19′ Rt	"I-4" 70+21.13	267.64	END BIO-SWALE
61	(b)	119.51′ Rt	"B" 577+47.78	279.00	BEGIN BIO-SWALE
61	(b)	133.20′ Rt	"B" 576+00.57	277.54	END BIO-SWALE

DRAINAGE PLAN

SCALE: 1" = 50′

THIS PLAN ACCURATE FOR DRAINAGE WORK ONLY

D-11

REVISED BY	DATE REVISED

CALCULATED-DESIGNED BY: SCOTT CARTWRIGHT
CHECKED BY: RICHARD LUCERA
CONSULTANT FUNCTIONAL SUPERVISOR: RICHARD LUCERA
STATE OF CALIFORNIA - DEPARTMENT OF TRANSPORTATION

LAST REVISION | DATE PLOTTED => 16-DEC-2009
08-01-08 | TIME PLOTTED => 08:34

H:\PDATA\10105878\CADD\Strmwater\Dlv\Merged CADD Files\c0F031ia011.dgn
trrene 16-DEC-2009 08:34

BORDER LAST REVISED 4/11/2008 | RELATIVE BORDER SCALE IS IN INCHES 0 1 2 3 | USERNAME => trrene DGN FILE => c0F031ia011.dgn | CU 12220 | EA 0F0311

Dist	COUNTY	ROUTE	POST MILES TOTAL PROJECT	SHEET No.	TOTAL SHEETS
12	Ora	57	16.2/18.6	140	960

REGISTERED CIVIL ENGINEER — 7/15/09 DATE

RICHARD LUCERA No. 58089 Exp. 6/30/10 CIVIL — REGISTERED PROFESSIONAL ENGINEER — STATE OF CALIFORNIA

12-14-09
PLANS APPROVAL DATE

THE STATE OF CALIFORNIA OR ITS OFFICERS OR AGENTS SHALL NOT BE RESPONSIBLE FOR THE ACCURACY OR COMPLETENESS OF SCANNED COPIES OF THIS PLAN SHEET.

RBF CONSULTING
14275 ALTON PKWY
IRVINE, CA 92618

OCTA
550 S. MAIN STREET
ORANGE, CA 92863

NOTE:
FOR COMPLETE R/W AND ACCURATE ACCESS DATA,
SEE R/W RECORD MAPS AT DISTRICT OFFICE.

DRAINAGE SYS No.	UNIT	OFFSET	STATION	FL Elev	DESCRIPTION
54	b	35.35′ Rt	"I-3" 79+02.19	277.49	BC Conc DITCH, BEGIN REMOVE DITCH
54	b	32.66′ Rt	"I-3" 82+47.62	278.91	ANGLE POINT Conc DITCH
54	b	38.00′ Rt	"I-3" 84+17.98	279.60	HIGH POINT Conc DITCH
54	b	38.68′ Rt	"I-3" 85+63.92	279.14	END Conc DITCH
54	c	39.00′ Rt	"I-3" 86+00.00	279.32	BEGIN Conc DITCH
54	c	38.80′ Rt	"I-3" 85+73.30	278.95	END Conc DITCH

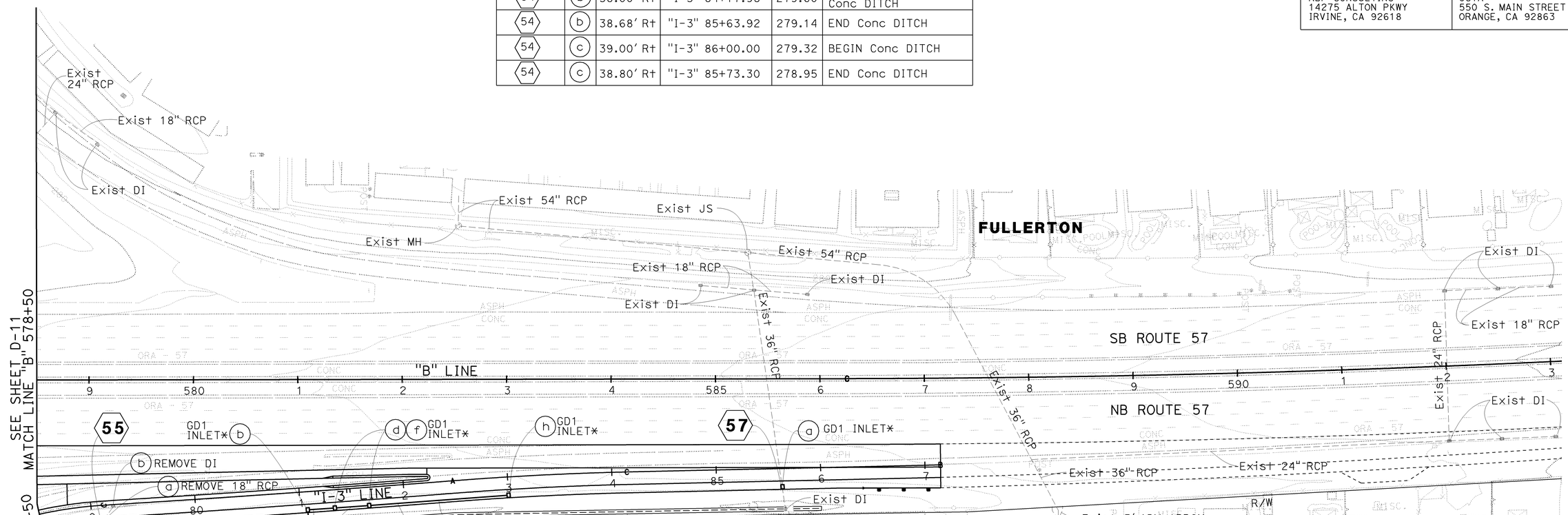

DRAINAGE PLAN

SCALE: 1" = 50′

D-12

THIS PLAN ACCURATE FOR DRAINAGE WORK ONLY

H:\PDATA\10105878\CADD\Strmwater\Div\Merged CADD Files\c0F0311ig012.dgn
16-DEC-2009 08:35
trrene
CALCULATED-DESIGNED BY
CHECKED BY
SCOTT CARTWRIGHT
RICHARD LUCERA
REVISED BY
DATE REVISED
CONSULTANT FUNCTIONAL SUPERVISOR
RICHARD LUCERA
STATE OF CALIFORNIA - DEPARTMENT OF TRANSPORTATION
Caltrans
BORDER LAST REVISED 4/11/2008
RELATIVE BORDER SCALE IS IN INCHES 0 1 2 3
USERNAME => trrene
DGN FILE => c0F0311ig012.dgn
CU 12220
EA 0F0311
LAST REVISION DATE PLOTTED => 16-DEC-2009
TIME PLOTTED => 08:35
08-01-08

Dist	COUNTY	ROUTE	POST MILES TOTAL PROJECT	SHEET No.	TOTAL SHEETS
12	Ora	57	16.2/18.6	141	960

Richard J. Lucera — REGISTERED CIVIL ENGINEER — 12/3/09 DATE

RICHARD LUCERA No. 58089 Exp. 6/30/10 CIVIL — REGISTERED PROFESSIONAL ENGINEER — STATE OF CALIFORNIA

12-14-09
PLANS APPROVAL DATE

THE STATE OF CALIFORNIA OR ITS OFFICERS OR AGENTS SHALL NOT BE RESPONSIBLE FOR THE ACCURACY OR COMPLETENESS OF SCANNED COPIES OF THIS PLAN SHEET.

RBF CONSULTING
14275 ALTON PKWY
IRVINE, CA 92618

OCTA
550 S. MAIN STREET
ORANGE, CA 92863

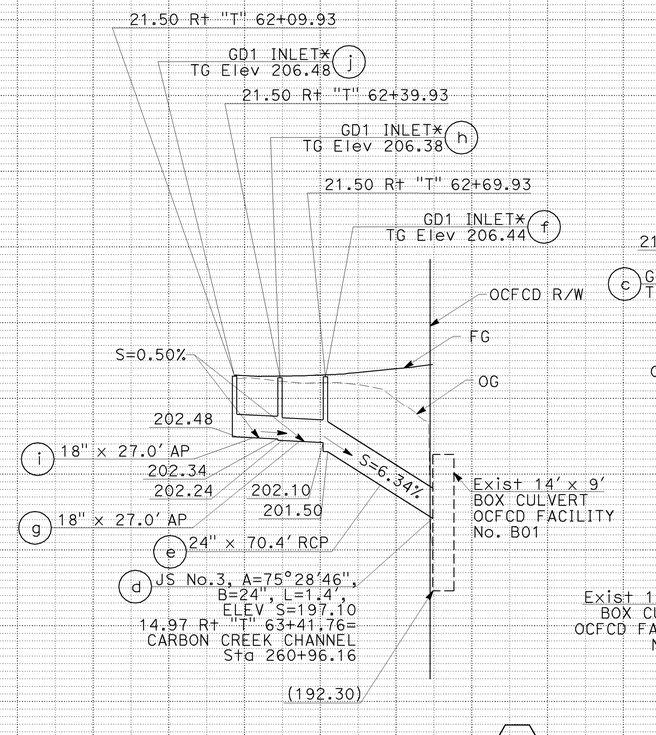

DRAINAGE SYSTEM No. 1

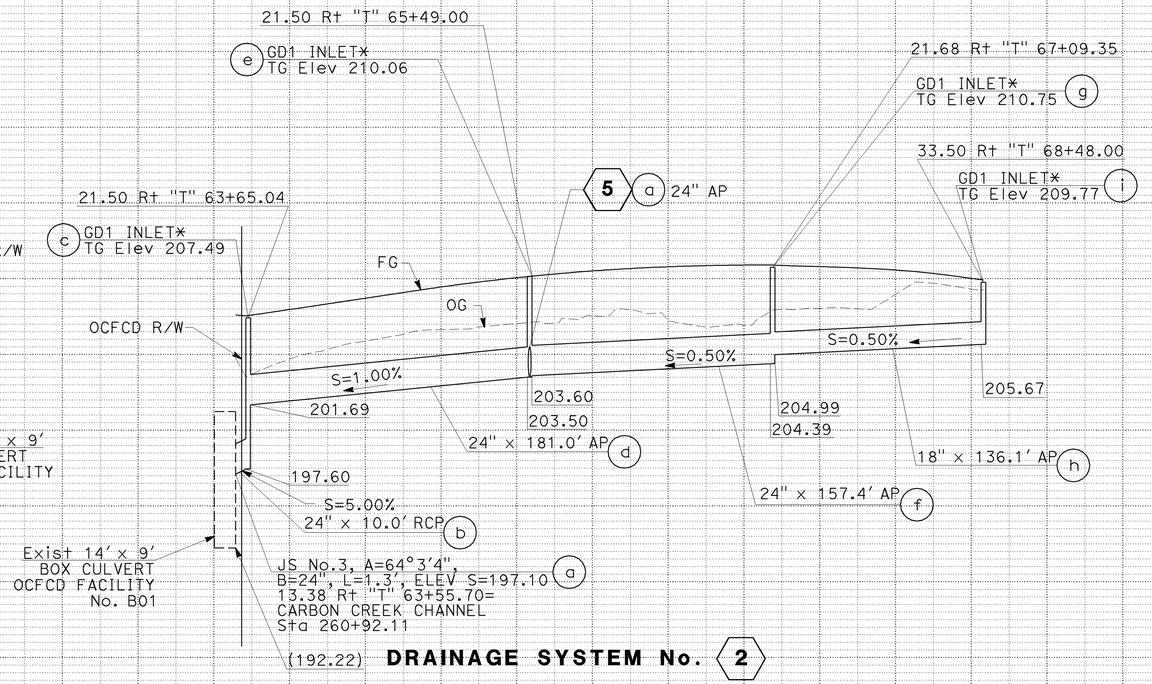

DRAINAGE SYSTEM No. 2

NOTE:

FOR GLD INVERT SLOPE SEE SHEET DD-8

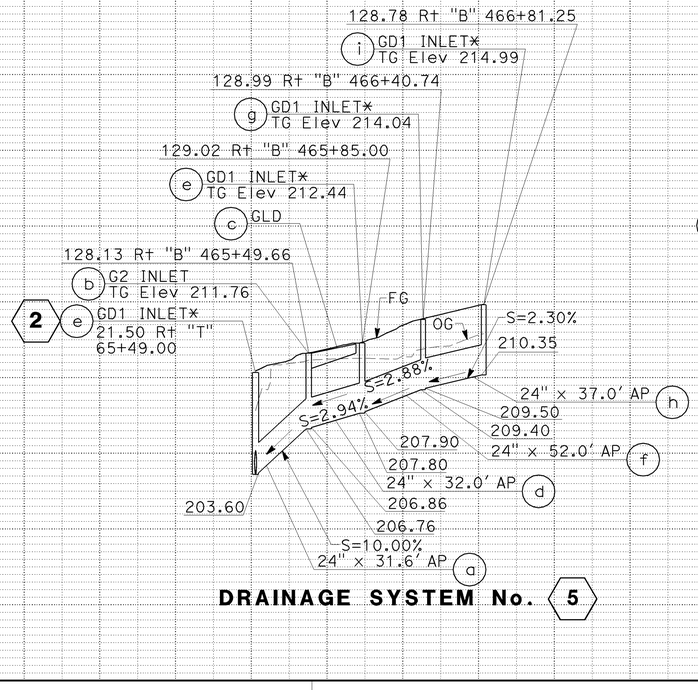

DRAINAGE SYSTEM No. 5

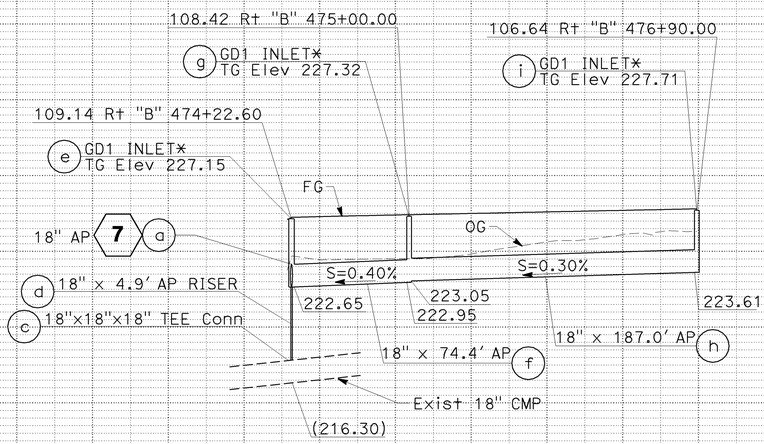

DRAINAGE SYSTEM No. 6

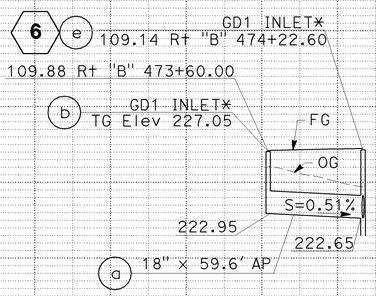

DRAINAGE SYSTEM No. 7

NOTE:

1. FOR DRAINAGE SYSTEMS 3 8 14 18 19 54 58 61 63, SEE DRAINAGE PLANS.

DRAINAGE PROFILE

SCALE: Horiz 1" = 50'
Vert 1" = 5'

DP-1

REVISED BY: JJV — DATE REVISED: 12/3/09
CALCULATED-DESIGNED BY: SCOTT CARTWRIGHT
CHECKED BY: RICHARD LUCERA
CONSULTANT FUNCTIONAL SUPERVISOR: RICHARD LUCERA

STATE OF CALIFORNIA - DEPARTMENT OF TRANSPORTATION
Caltrans

H:\PDATA\10105878\CADD\Trmwater\Div\Merged CADD Files\c0F031ib001.dgn
trrene
16-DEC-2009 08:35

LAST REVISION DATE PLOTTED => 16-DEC-2009
08-01-08 TIME PLOTTED => 08:35

BORDER LAST REVISED 4/11/2008
RELATIVE BORDER SCALE IS IN INCHES 0 1 2 3
USERNAME => trrene
DGN FILE => c0F031ib001.dgn
CU 12220
EA 0F0311

Dist	COUNTY	ROUTE	POST MILES TOTAL PROJECT	SHEET No.	TOTAL SHEETS
12	Ora	57	16.2/18.6	142	960

REGISTERED CIVIL ENGINEER — 7/15/09 DATE

RICHARD LUCERA No. 58089 Exp. 6/30/10 CIVIL — REGISTERED PROFESSIONAL ENGINEER — STATE OF CALIFORNIA

12-14-09
PLANS APPROVAL DATE

THE STATE OF CALIFORNIA OR ITS OFFICERS OR AGENTS SHALL NOT BE RESPONSIBLE FOR THE ACCURACY OR COMPLETENESS OF SCANNED COPIES OF THIS PLAN SHEET.

RBF CONSULTING
14275 ALTON PKWY
IRVINE, CA 92618

OCTA
550 S. MAIN STREET
ORANGE, CA 92863

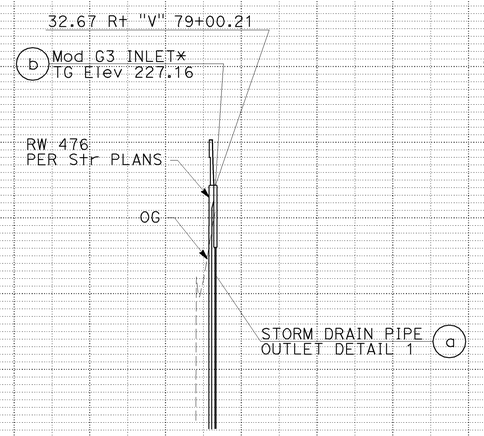

DRAINAGE SYSTEM No. 9

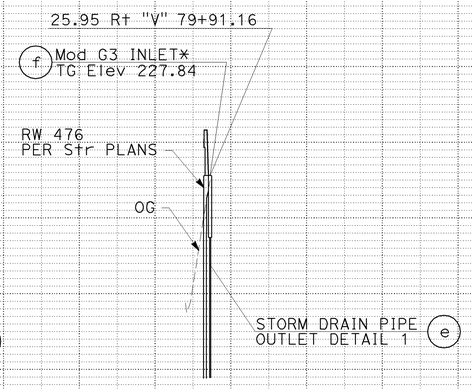

DRAINAGE SYSTEM No. 10

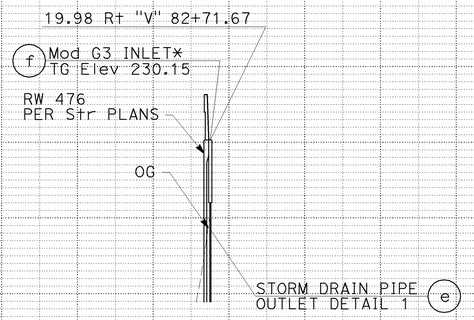

DRAINAGE SYSTEM No. 11

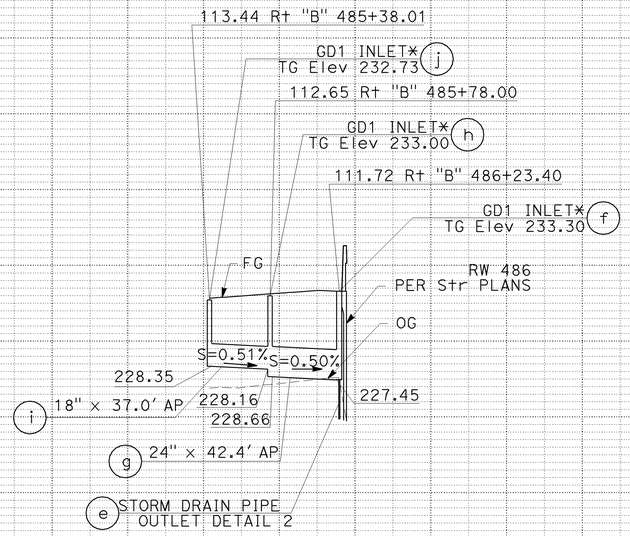

DRAINAGE SYSTEM No. 12

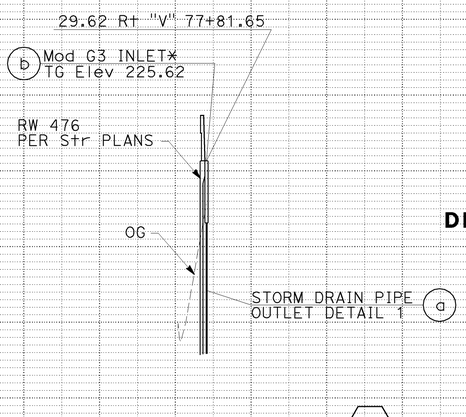

DRAINAGE SYSTEM No. 13

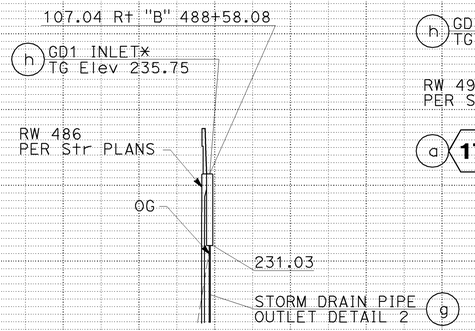

DRAINAGE SYSTEM No. 15

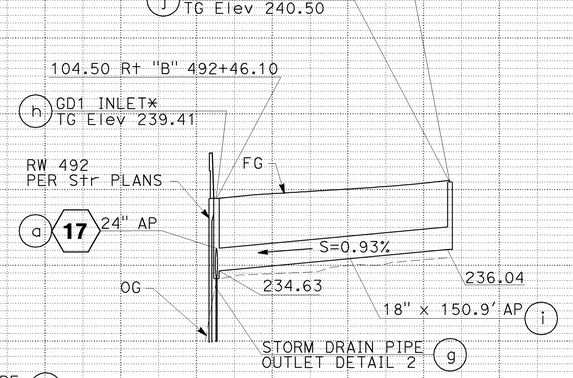

DRAINAGE SYSTEM No. 16

DRAINAGE PROFILE

SCALE: Horiz 1" = 50'
Vert 1" = 5'

DP-2

REVISED BY | DATE REVISED

CALCULATED-DESIGNED BY: SCOTT CARTWRIGHT
CHECKED BY: RICHARD LUCERA
CONSULTANT FUNCTIONAL SUPERVISOR: RICHARD LUCERA
STATE OF CALIFORNIA - DEPARTMENT OF TRANSPORTATION — Caltrans

H:\PDATA\10105878\CADD\Strmwater\Dlv\Merged CADD Files\c0F031ib002.dgn
trrene
16-DEC-2009 08:35

LAST REVISION | DATE PLOTTED => 16-DEC-2009
08-01-08 | TIME PLOTTED => 08:35

BORDER LAST REVISED 4/11/2008
RELATIVE BORDER SCALE IS IN INCHES 0 1 2 3
USERNAME => trrene
DGN FILE => c0F031ib002.dgn
CU 12220
EA 0F0311

Dist	COUNTY	ROUTE	POST MILES TOTAL PROJECT	SHEET No.	TOTAL SHEETS
12	Ora	57	16.2/18.6	143	960

REGISTERED CIVIL ENGINEER — 7/15/09 DATE

RICHARD LUCERA No. 58089 Exp. 6/30/10 CIVIL — REGISTERED PROFESSIONAL ENGINEER — STATE OF CALIFORNIA

12-14-09
PLANS APPROVAL DATE

THE STATE OF CALIFORNIA OR ITS OFFICERS OR AGENTS SHALL NOT BE RESPONSIBLE FOR THE ACCURACY OR COMPLETENESS OF SCANNED COPIES OF THIS PLAN SHEET.

RBF CONSULTING
14275 ALTON PKWY
IRVINE, CA 92618

OCTA
550 S. MAIN STREET
ORANGE, CA 92863

104.50 Rt "B" 491+77.00
GD1 INLET*
TG Elev 239.17 (d)
104.50 Rt "B" 492+11.51
GD1 INLET*
TG Elev 239.30 (b)
GD1 INLET*
104.50 Rt "B" 492+46.10 (h) 16
FG
OG
234.95
(c) 18" x 31.5' AP
S=0.50%
234.79
234.29
(a) 24" x 31.6' AP
S=0.50%
234.13

DRAINAGE SYSTEM No. 17

104.50 Rt "B" 496+80.01
(b) Mod G3 INLET*
TG Elev 243.24
RW 496
PER Str PLANS
STORM DRAIN PIPE
OUTLET DETAIL 1 (a)

DRAINAGE SYSTEM No. 20

104.50 Rt "B" 497+45.04
(f) Mod G3 INLET*
TG Elev 243.39
RW 496
PER Str PLANS
STORM DRAIN PIPE
OUTLET DETAIL 1 (e)

DRAINAGE SYSTEM No. 21

104.50 Rt "B" 497+10.01
(b) Mod G3 INLET*
TG Elev 243.38
RW 496
PER Str PLANS
STORM DRAIN PIPE
OUTLET DETAIL 1 (a)

DRAINAGE SYSTEM No. 23

104.5 Rt "B" 502+10.00
(b) Mod G3 INLET*
TG Elev 243.39
RW 496
PER Str PLANS
STORM DRAIN PIPE
OUTLET DETAIL 1 (a)

DRAINAGE SYSTEM No. 24

104.5 Rt "B" 503+35.00
(b) Mod G3 INLET*
TG Elev 243.19
RW 496
PER Str PLANS
STORM DRAIN PIPE
OUTLET DETAIL 1 (a)

DRAINAGE SYSTEM No. 25

157.24 Rt "B" 495+76.69
(c) G1 INLET
TG Elev 210.00
Exist
8" RCP
FG
OG
(208.95)

DRAINAGE SYSTEM No. 22

DRAINAGE PROFILE

SCALE: Horiz 1" = 50'
Vert 1" = 5'

DP-3

REVISED BY | DATE REVISED
SCOTT CARTWRIGHT | 16-DEC-2009 08:35
CALCULATED-DESIGNED BY
RICHARD LUCERA
CHECKED BY
RICHARD LUCERA
CONSULTANT FUNCTIONAL SUPERVISOR
STATE OF CALIFORNIA - DEPARTMENT OF TRANSPORTATION
Caltrans

H:\PDATA\10105878\CADD\Strmwater\Div\Merged CADD Files\c0F031ib003.dgn trrene

LAST REVISION | DATE PLOTTED => 16-DEC-2009
08-01-08 | TIME PLOTTED => 08:35

BORDER LAST REVISED 4/11/2008 | RELATIVE BORDER SCALE IS IN INCHES 0 1 2 3 | USERNAME => trrene | DGN FILE => c0F031ib003.dgn | CU 12220 | EA 0F0311

Dist	COUNTY	ROUTE	POST MILES TOTAL PROJECT	SHEET No.	TOTAL SHEETS
12	Ora	57	16.2/18.6	144	960

Richard Lucera — REGISTERED CIVIL ENGINEER — 7/15/09 DATE

12-14-09
PLANS APPROVAL DATE

RICHARD LUCERA No. 58089 Exp 6/30/10 CIVIL — REGISTERED PROFESSIONAL ENGINEER — STATE OF CALIFORNIA

THE STATE OF CALIFORNIA OR ITS OFFICERS OR AGENTS SHALL NOT BE RESPONSIBLE FOR THE ACCURACY OR COMPLETENESS OF SCANNED COPIES OF THIS PLAN SHEET.

RBF CONSULTING
14275 ALTON PKWY
IRVINE, CA 92618

OCTA
550 S. MAIN STREET
ORANGE, CA 92863

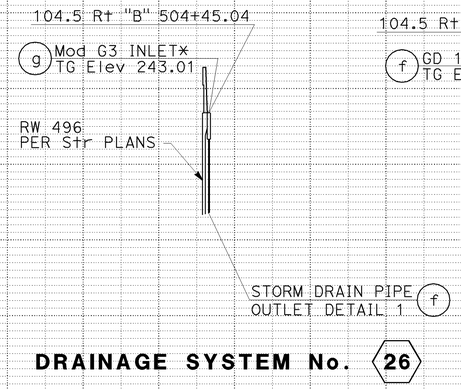

DRAINAGE SYSTEM No. 26

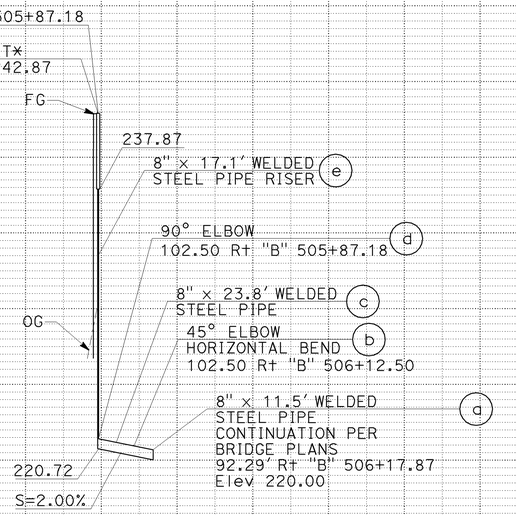

DRAINAGE SYSTEM No. 28

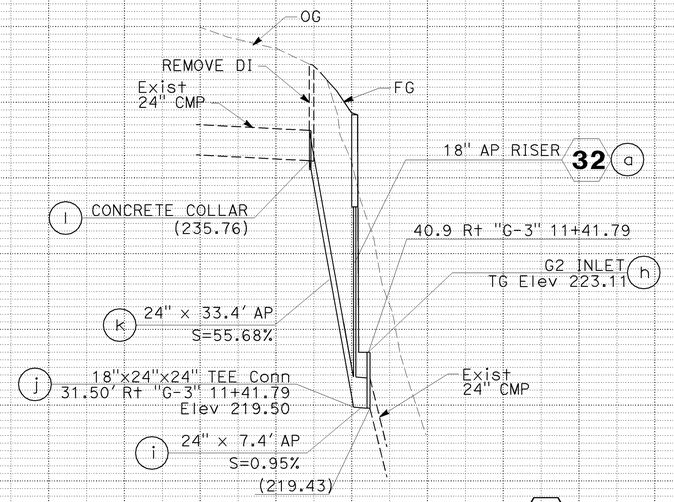

DRAINAGE SYSTEM No. 30

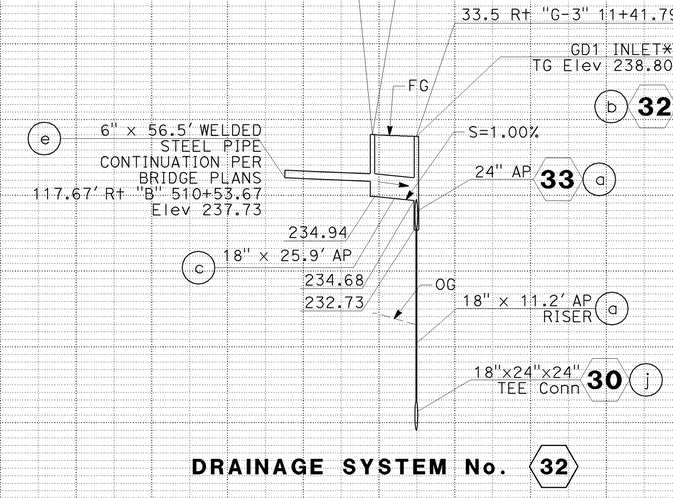

DRAINAGE SYSTEM No. 32

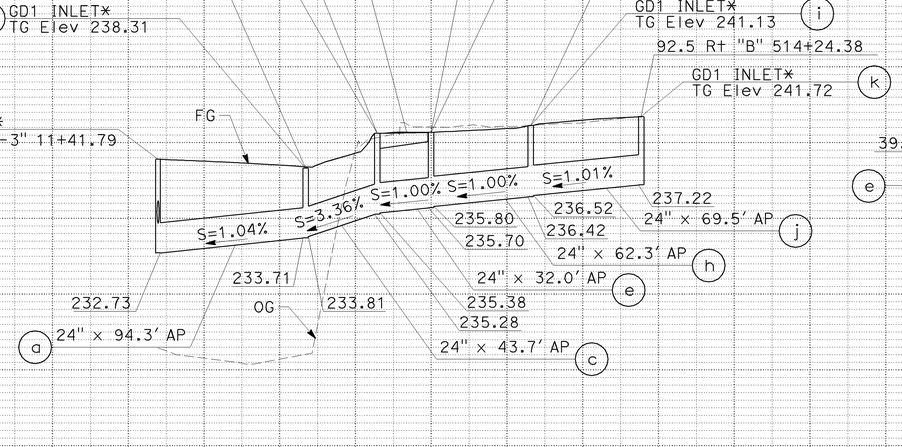

DRAINAGE SYSTEM No. 33

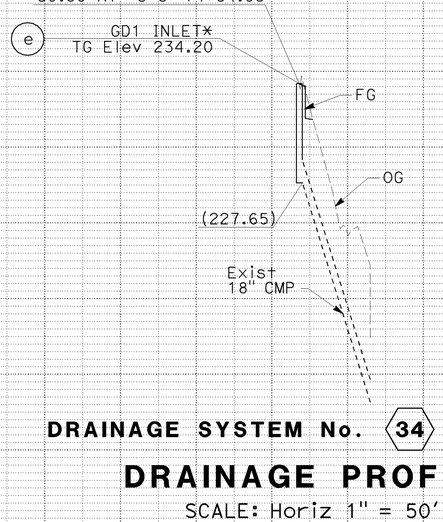

DRAINAGE SYSTEM No. 34

DRAINAGE PROFILE

SCALE: Horiz 1" = 50'
Vert 1" = 5'

DP-4

REVISED BY	DATE REVISED

CALCULATED-DESIGNED BY: SCOTT CARTWRIGHT
CHECKED BY: RICHARD LUCERA
CONSULTANT FUNCTIONAL SUPERVISOR: RICHARD LUCERA
STATE OF CALIFORNIA - DEPARTMENT OF TRANSPORTATION

H:\PDATA\10105878\CADD\Strmwater\Div\Merged CADD Files\c0F031ib004.dgn
16-DEC-2009 08:35
trrene

LAST REVISION DATE PLOTTED => 16-DEC-2009
TIME PLOTTED => 08:35
08-01-08

BORDER LAST REVISED 4/11/2008
RELATIVE BORDER SCALE IS IN INCHES 0 1 2 3
USERNAME => trrene
DGN FILE => c0F031ib004.dgn
CU 12220
EA 0F0311

Dist	COUNTY	ROUTE	POST MILES TOTAL PROJECT	SHEET No.	TOTAL SHEETS
12	Ora	57	16.2/18.6	145	960

Richard J. Lucera — REGISTERED CIVIL ENGINEER — 7/15/09 DATE

12-14-09
PLANS APPROVAL DATE

REGISTERED PROFESSIONAL ENGINEER — RICHARD LUCERA — No. 58089 — Exp. 6/30/10 — CIVIL — STATE OF CALIFORNIA

THE STATE OF CALIFORNIA OR ITS OFFICERS OR AGENTS SHALL NOT BE RESPONSIBLE FOR THE ACCURACY OR COMPLETENESS OF SCANNED COPIES OF THIS PLAN SHEET.

RBF CONSULTING
14275 ALTON PKWY
IRVINE, CA 92618

OCTA
550 S. MAIN STREET
ORANGE, CA 92863

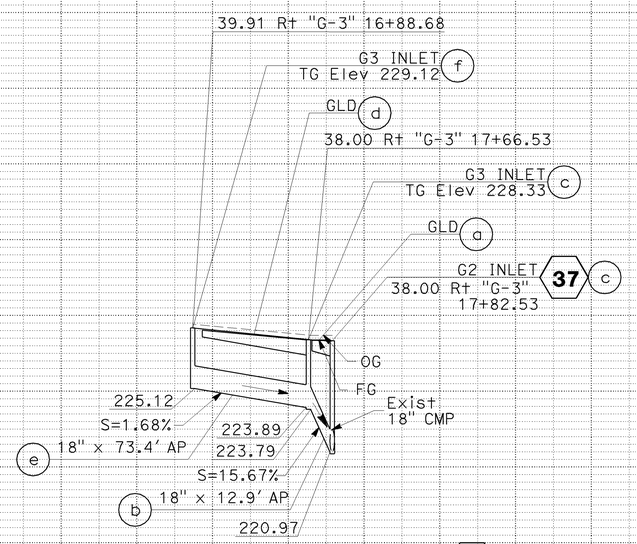

DRAINAGE SYSTEM No. 35

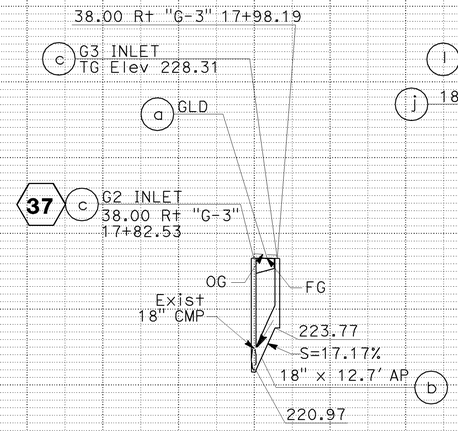

DRAINAGE SYSTEM No. 36

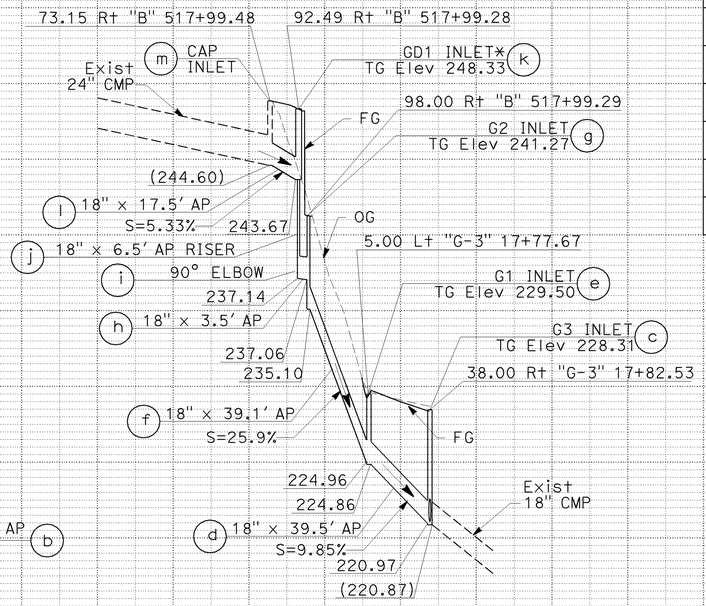

DRAINAGE SYSTEM No. 37

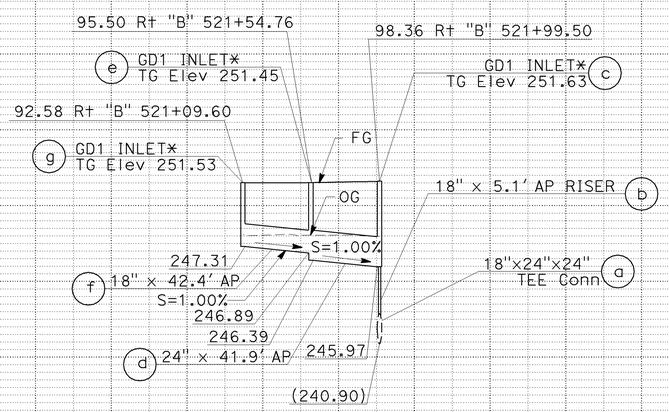

DRAINAGE SYSTEM No. 38

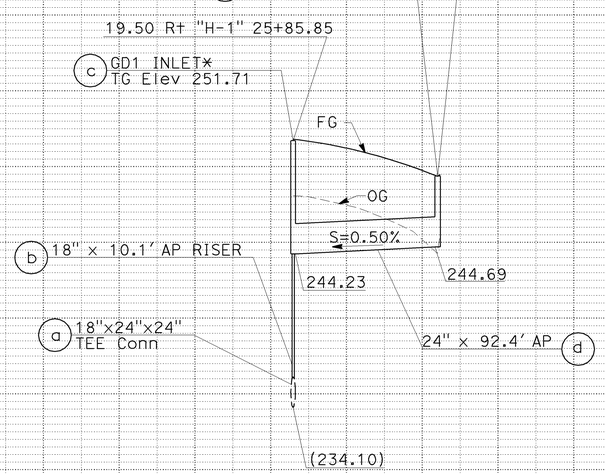

DRAINAGE SYSTEM No. 41

DRAINAGE PROFILE

SCALE: Horiz 1" = 50'
Vert 1" = 5'

DP-5

REVISED BY | DATE REVISED
SCOTT CARTWRIGHT | RICHARD LUCERA
CALCULATED-DESIGNED BY | CHECKED BY
CONSULTANT FUNCTIONAL SUPERVISOR: RICHARD LUCERA
STATE OF CALIFORNIA - DEPARTMENT OF TRANSPORTATION
Caltrans

H:\PDATA\10105878\CADD\Strmwater\Div\Merged CADD Files\c0F0311ib005.dgn
16-DEC-2009 08:36
trcarol

LAST REVISION | DATE PLOTTED => 16-DEC-2009
08-01-08 | TIME PLOTTED => 08:36

BORDER LAST REVISED 4/11/2008
RELATIVE BORDER SCALE IS IN INCHES 0 1 2 3
USERNAME => trcarol
DGN FILE => c0F0311ib005.dgn
CU 12220
EA 0F0311

Dist	COUNTY	ROUTE	POST MILES TOTAL PROJECT	SHEET No.	TOTAL SHEETS
12	Ora	57	16.2/18.6	146	960

REGISTERED CIVIL ENGINEER — 7/15/09 DATE

RICHARD LUCERA No. 58089 Exp. 6/30/10 CIVIL — REGISTERED PROFESSIONAL ENGINEER — STATE OF CALIFORNIA

12-14-09
PLANS APPROVAL DATE

THE STATE OF CALIFORNIA OR ITS OFFICERS OR AGENTS SHALL NOT BE RESPONSIBLE FOR THE ACCURACY OR COMPLETENESS OF SCANNED COPIES OF THIS PLAN SHEET.

RBF CONSULTING
14275 ALTON PKWY
IRVINE, CA 92618

OCTA
550 S. MAIN STREET
ORANGE, CA 92863

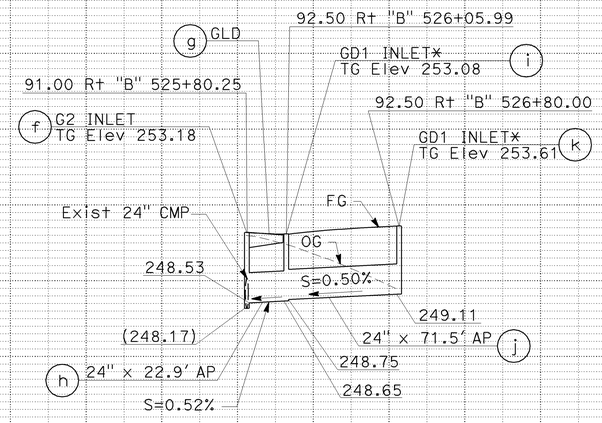

DRAINAGE SYSTEM No. 42

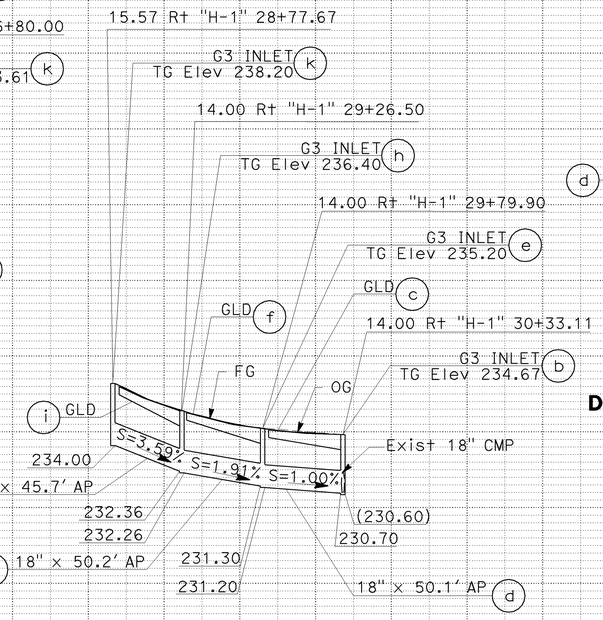

DRAINAGE SYSTEM No. 44

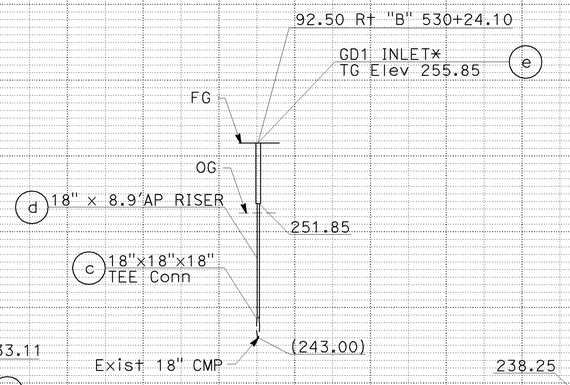

DRAINAGE SYSTEM No. 45

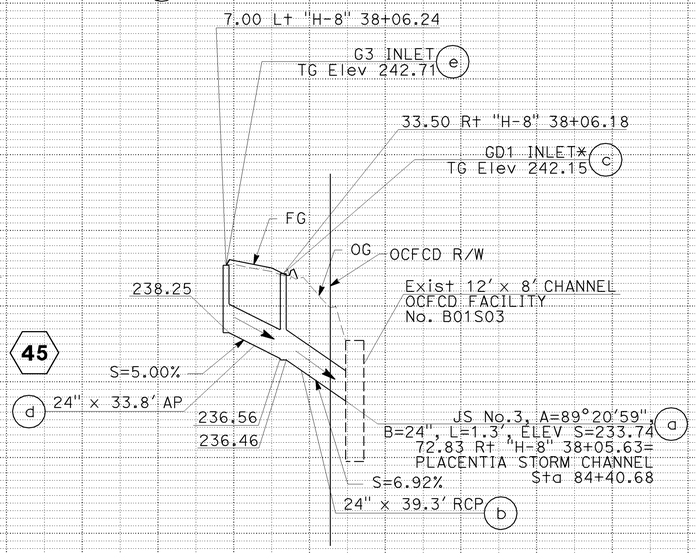

DRAINAGE SYSTEM No. 46

DRAINAGE PROFILE

SCALE: Horiz 1" = 50'
Vert 1" = 5'

DP-6

LAST REVISION | DATE PLOTTED => 16-DEC-2009
08-01-08 | TIME PLOTTED => 08:36

CALCULATED-DESIGNED BY: SCOTT CARTWRIGHT
CHECKED BY: RICHARD LUCERA
REVISED BY | DATE REVISED
CONSULTANT FUNCTIONAL SUPERVISOR: RICHARD LUCERA
STATE OF CALIFORNIA - DEPARTMENT OF TRANSPORTATION
Caltrans

H:\PDATA\10105878\CADD\Strmwater\Div\Merged CADD Files\c0F031ib006.dgn trcarol 16-DEC-2009 08:36

BORDER LAST REVISED 4/11/2008
RELATIVE BORDER SCALE IS IN INCHES 0 1 2 3
USERNAME => trcarol
DGN FILE => c0F031ib006.dgn
CU 12220
EA 0F0311

Dist	COUNTY	ROUTE	POST MILES TOTAL PROJECT	SHEET No.	TOTAL SHEETS
12	Ora	57	16.2/18.6	147	960

Richard Lucera — REGISTERED CIVIL ENGINEER — 7/15/09 DATE

12-14-09
PLANS APPROVAL DATE

RICHARD LUCERA No. 58089 Exp 6/30/10 CIVIL — REGISTERED PROFESSIONAL ENGINEER — STATE OF CALIFORNIA

THE STATE OF CALIFORNIA OR ITS OFFICERS OR AGENTS SHALL NOT BE RESPONSIBLE FOR THE ACCURACY OR COMPLETENESS OF SCANNED COPIES OF THIS PLAN SHEET.

RBF CONSULTING
14275 ALTON PKWY
IRVINE, CA 92618

OCTA
550 S. MAIN STREET
ORANGE, CA 92863

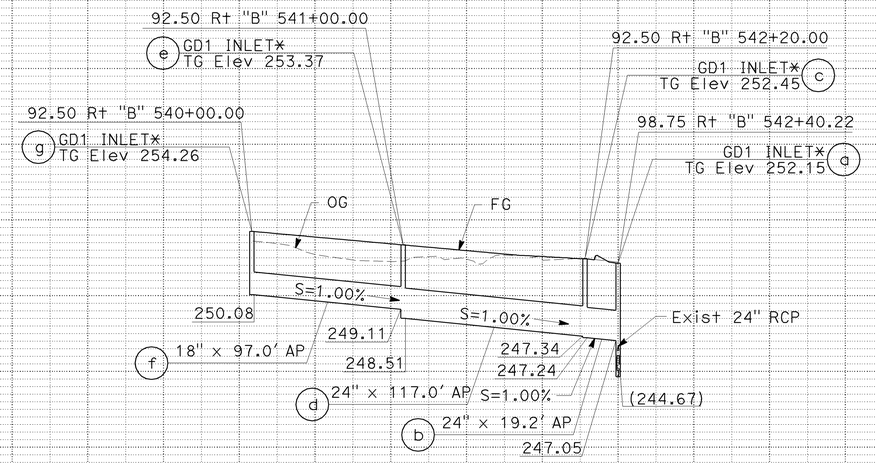

DRAINAGE SYSTEM No. 47

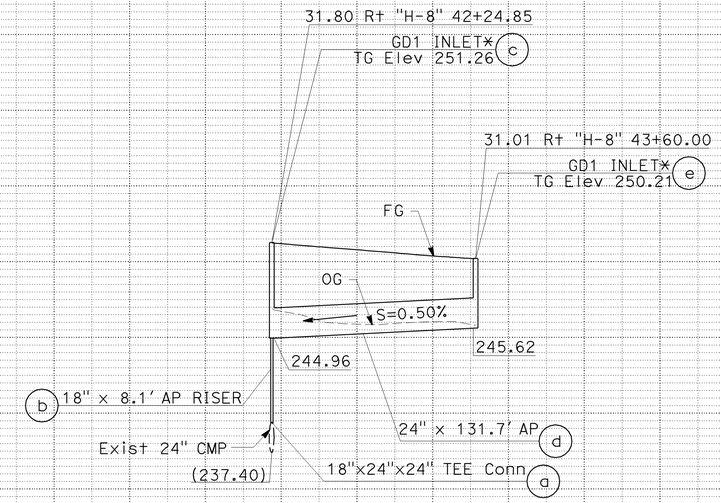

DRAINAGE SYSTEM No. 49

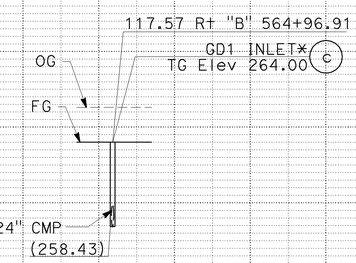

DRAINAGE SYSTEM No. 52

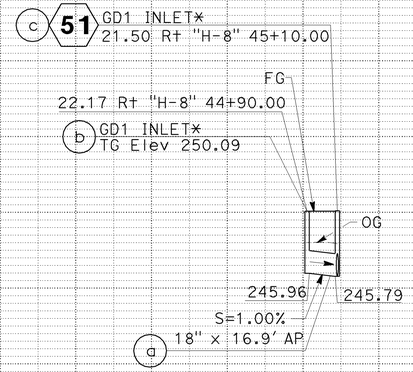

DRAINAGE SYSTEM No. 50

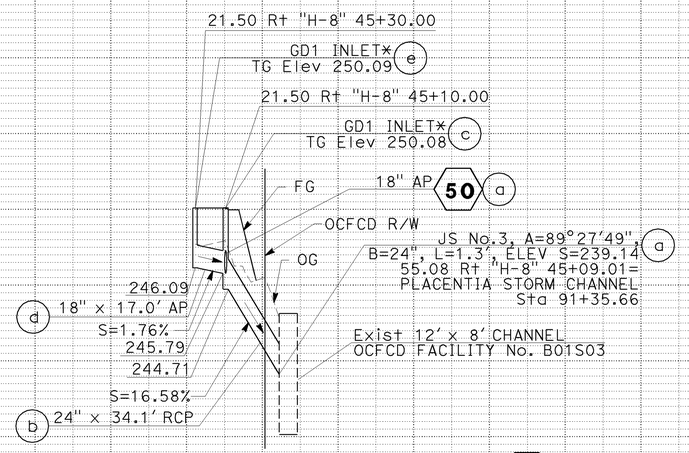

DRAINAGE SYSTEM No. 51

DRAINAGE PROFILE

SCALE: Horiz 1" = 50'
Vert 1" = 5'

DP-7

LAST REVISION DATE PLOTTED => 16-DEC-2009
TIME PLOTTED => 08:36

16-DEC-2009 08:36
H:\PDATA\10105878\CADD\Strmwater\Dlv\Merged CADD Files\c0F0311b007.dgn
trcarol

REVISED BY	DATE REVISED

CALCULATED-DESIGNED BY: SCOTT CARTWRIGHT
CHECKED BY: RICHARD LUCERA
CONSULTANT FUNCTIONAL SUPERVISOR: RICHARD LUCERA

STATE OF CALIFORNIA - DEPARTMENT OF TRANSPORTATION
Caltrans

BORDER LAST REVISED 4/11/2008

RELATIVE BORDER SCALE IS IN INCHES 0 1 2 3

USERNAME => trcarol
DGN FILE => c0F0311b007.dgn

CU 12220

EA 0F0311

Dist	COUNTY	ROUTE	POST MILES TOTAL PROJECT	SHEET No.	TOTAL SHEETS
12	Ora	57	16.2/18.6	148	960

REGISTERED CIVIL ENGINEER — DATE 7/15/09

RICHARD LUCERA No. 58089 Exp 6/30/10 CIVIL — REGISTERED PROFESSIONAL ENGINEER — STATE OF CALIFORNIA

12-14-09
PLANS APPROVAL DATE

THE STATE OF CALIFORNIA OR ITS OFFICERS OR AGENTS SHALL NOT BE RESPONSIBLE FOR THE ACCURACY OR COMPLETENESS OF SCANNED COPIES OF THIS PLAN SHEET.

RBF CONSULTING
14275 ALTON PKWY
IRVINE, CA 92618

OCTA
550 S. MAIN STREET
ORANGE, CA 92863

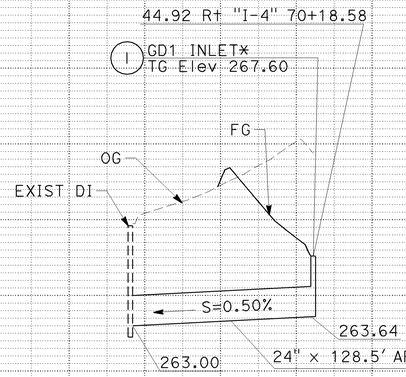

DRAINAGE SYSTEM No. 53

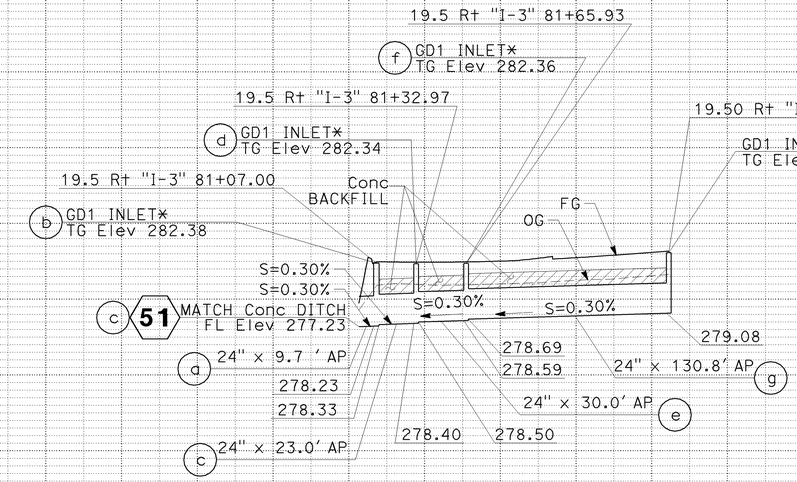

DRAINAGE SYSTEM No. 56

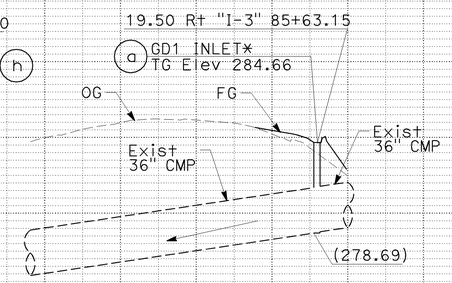

DRAINAGE SYSTEM No. 57

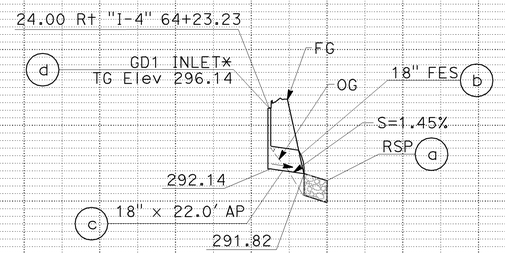

DRAINAGE SYSTEM No. 60

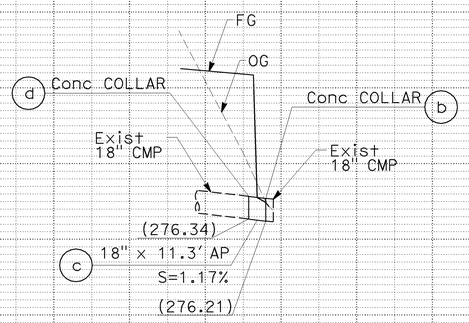

DRAINAGE SYSTEM No. 64

DRAINAGE PROFILE

SCALE: Horiz 1" = 50'
Vert 1" = 5'

DP-8

H:\PDATA\10105878\CADD\Strmwater\Div\Merged CADD Files\c0F031ib008.dgn
STATE OF CALIFORNIA - DEPARTMENT OF TRANSPORTATION
Caltrans
CALCULATED-DESIGNED BY: RICHARD LUCERA
CHECKED BY
CONSULTANT FUNCTIONAL SUPERVISOR
REVISED BY
DATE REVISED
16-DEC-2009 08:36
trrene

BORDER LAST REVISED 4/11/2008
RELATIVE BORDER SCALE IS IN INCHES 0 1 2 3
USERNAME => trrene
DGN FILE => c0F031ib008.dgn
CU 12220
EA 0F0311
LAST REVISION DATE PLOTTED => 16-DEC-2009
TIME PLOTTED => 08:36
08-01-08

Dist	COUNTY	ROUTE	POST MILES TOTAL PROJECT	SHEET No.	TOTAL SHEETS
12	Ora	57	16.2/18.6	149	960

Richard Lucera 7/15/09
REGISTERED CIVIL ENGINEER DATE

12-14-09
PLANS APPROVAL DATE

REGISTERED PROFESSIONAL ENGINEER — RICHARD LUCERA No. 58089 Exp. 6/30/10 CIVIL — STATE OF CALIFORNIA

THE STATE OF CALIFORNIA OR ITS OFFICERS OR AGENTS SHALL NOT BE RESPONSIBLE FOR THE ACCURACY OR COMPLETENESS OF SCANNED COPIES OF THIS PLAN SHEET.

RBF CONSULTING
14275 ALTON PKWY
IRVINE, CA 92618

OCTA
550 S. MAIN STREET
ORANGE, CA 92863

D	L	T
12"	1.0'	4"
18"	1.0'	5"
24"	1.0'	6"
36"	1.5'	8"
48"	1.5'	10"
54"	1.5'	10"
60"	1.75'	11"
66"	1.75'	11"
72"	2.0'	12"
78"	2.0'	14"
84"	2.0'	14"
90"	2.0'	14"
108"	2.9'	18"

USE TABLE UNLESS OTHERWISE NOTED ON PLANS

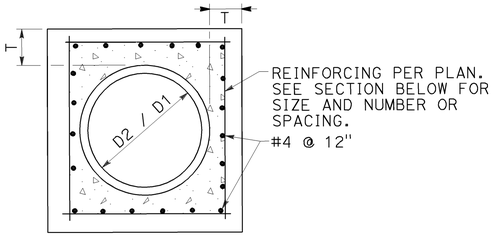

SECTION B-B

NOTES:

1. WHERE PIPES OF DIFFERENT DIAMETERS ARE JOINED WITH A CONCRETE COLLAR, 'L' AND 'T' SHALL BE THOSE OF THE LARGER PIPE. D=D1 OR D2, WHICHEVER IS GREATER.
2. FOR PIPE SIZE NOT LISTED USE NEXT SIZE LARGER.
3. OMIT REINFORCING ON PIPES 24" AND LESS IN DIAMETER AND ON ALL PIPES UP TO 72" DIAMETER WHERE ANGLE A IS LESS THAN 10°.
4. JOIN PIPES AT INVERTS WHERE THE SLOPE OF UPSTREAM PIPE IS LESS THAN THE SLOPE OF THE DOWNSTREAM PIPE, AND JOIN PIPES AT SOFFIT WITH A MITER JOINT WHERE THE SLOPE OF THE UPSTREAM PIPE IS GREATER THAN THE SLOPE OF THE DOWNSTREAM PIPE.
5. REINFORCEMENT SHALL BE PLACED 1 ½" CLEAR FROM OUTSIDE DIAMETER OF PIPE.
6. 10' MAX. COVER FOR 108" DIA. PIPE COLLAR.

DRAINAGE SYSTEM	
No.	UNIT
⟨12⟩	(e)
⟨15⟩	(e)
⟨16⟩	(e)
⟨20⟩	(a)
⟨21⟩	(e)
⟨23⟩	(a)
⟨24⟩	(a)
⟨25⟩	(a)
⟨26⟩	(f)
⟨30⟩	(l)
⟨64⟩	(d)

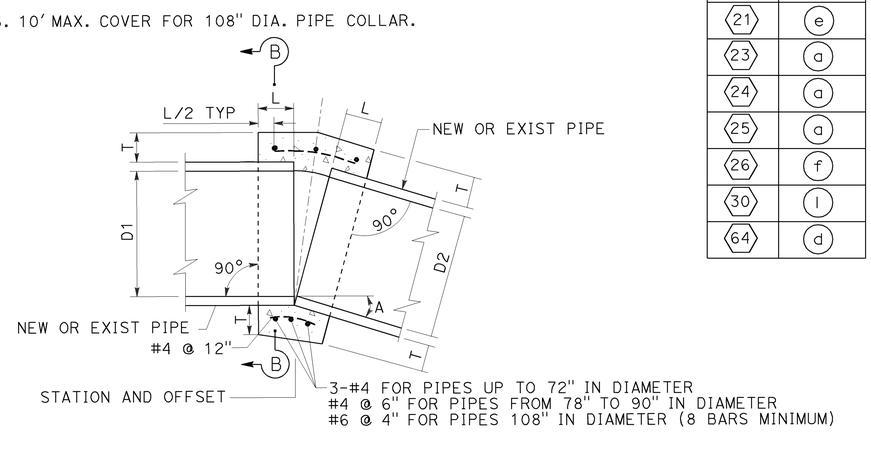

CONCRETE COLLAR DETAIL

DRAINAGE SYS No.	UNIT	W_{sp}	W_c	L_{sp}*	OUTER LAYER TYPE OF RSP	OUTER LAYER THK 1	INNER LAYER TYPE OF RSP	INNER LAYER THK 2	TYPE OF RSP FABRIC
⟨12⟩	(e)	19.5'	4.5'	15.0'	¼TON	3.3'	No.2	1.25'	A
⟨15⟩	(e)	14.5'	4.5'	10.0'	¼TON	3.3'	No.2	1.25'	A
⟨16⟩	(e)	14.5'	4.5'	10.0'	1 TON	5.4'	LIGHT	2.5'	B
⟨20⟩	(a)	14.5'	4.5'	10.0'	FACING	1.8'	N/A	N/A	A
⟨21⟩	(e)	14.5'	4.5'	10.0'	FACING	1.8'	N/A	N/A	A
⟨23⟩	(a)	14.5'	4.5'	10.0'	FACING	1.8'	N/A	N/A	A
⟨24⟩	(a)	14.5'	4.5'	10.0'	FACING	1.8'	N/A	N/A	A
⟨25⟩	(a)	14.5'	4.5'	10.0'	FACING	1.8'	N/A	N/A	A
⟨26⟩	(f)	14.5'	4.5'	10.0'	FACING	1.8'	N/A	N/A	A
⟨60⟩	(a)	18.0'	4.5'	13.5'	FACING	1.8'	N/A	N/A	A
⟨61⟩	(a)	10.0'	10.0'	20.5'	FACING	1.8'	N/A	N/A	A

ABBREVIATIONS:

N/A	NOT APPLICABLE
No. 2	BACKING No. 2

* RSP SHOULD EXTEND TO THE TOP OF BANK ON THE OPPOSITE SIDE OF THE SWALE, OR DITCH

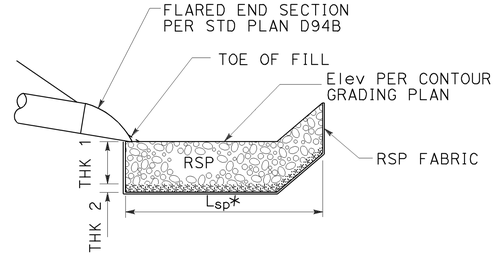

SECTION C-C

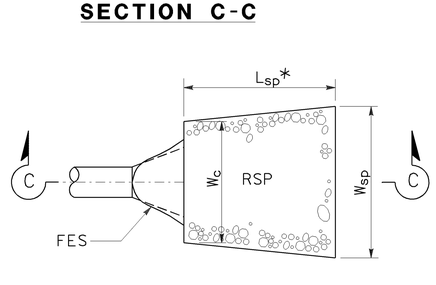

ROCK SLOPE PROTECTION AT PIPE OUTLET

DRAINAGE DETAILS

NO SCALE

DD-1

H:\PDATA\10105878\CADD\Strmwater\Div\Merged CADD Files\c0F031ic001.dgn
STATE OF CALIFORNIA - DEPARTMENT OF TRANSPORTATION
Caltrans
CONSULTANT FUNCTIONAL SUPERVISOR: RICHARD LUCERA
CALCULATED-DESIGNED BY: SCOTT CARTWRIGHT
CHECKED BY: RICHARD LUCERA
REVISED BY
DATE REVISED
16-DEC-2009 08:36
trrene

LAST REVISION DATE PLOTTED => 16-DEC-2009
TIME PLOTTED => 08:36

BORDER LAST REVISED 4/11/2008
RELATIVE BORDER SCALE IS IN INCHES 0 1 2 3
USERNAME => trrene
DGN FILE => c0F031ic001.dgn
CU 12220
EA 0F0311

Dist	COUNTY	ROUTE	POST MILES TOTAL PROJECT	SHEET No.	TOTAL SHEETS
12	Ora	57	16.2/18.6	150	960

REGISTERED CIVIL ENGINEER — DATE 7/15/09

RICHARD LUCERA No. 58089 Exp. 6/30/10 CIVIL — REGISTERED PROFESSIONAL ENGINEER — STATE OF CALIFORNIA

12-14-09
PLANS APPROVAL DATE

THE STATE OF CALIFORNIA OR ITS OFFICERS OR AGENTS SHALL NOT BE RESPONSIBLE FOR THE ACCURACY OR COMPLETENESS OF SCANNED COPIES OF THIS PLAN SHEET.

RBF CONSULTING
14275 ALTON PKWY
IRVINE, CA 92618

OCTA
550 S. MAIN STREET
ORANGE, CA 92863

DRAINAGE SYSTEM	
No.	UNIT
⟨37⟩	(m)
⟨39⟩	(a)
⟨42⟩	(e)
⟨45⟩	(f)
⟨48⟩	(e)
⟨52⟩	(d)

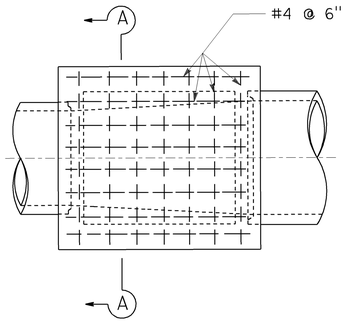

PLAN

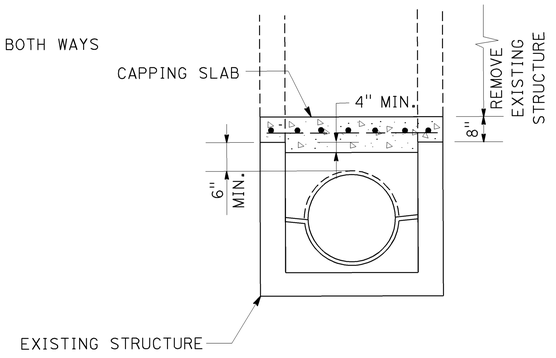

SECTION A-A

CAP INLET

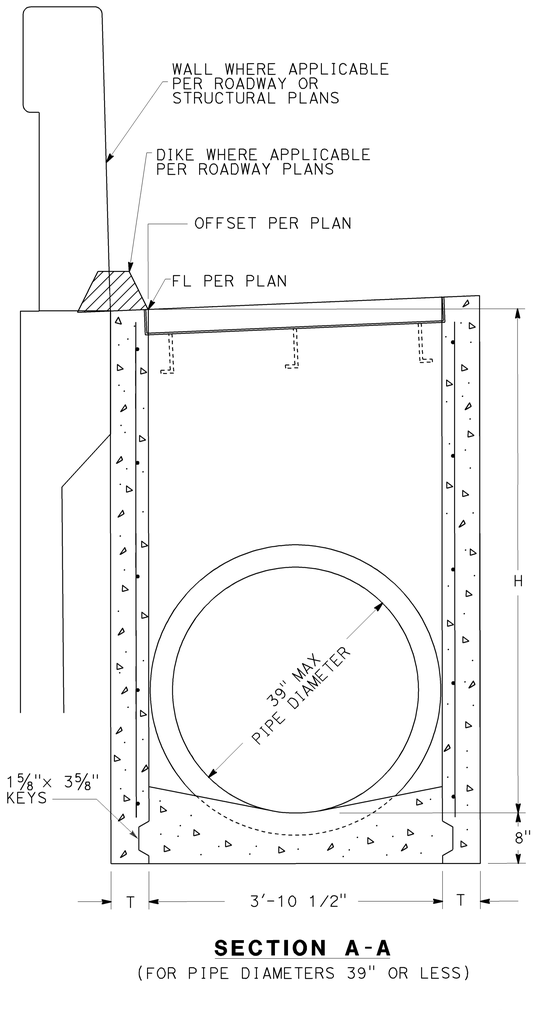

SECTION A-A
(FOR PIPE DIAMETERS 39" OR LESS)

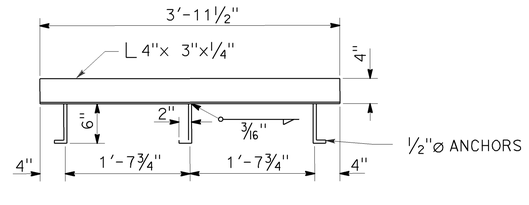

ANCHOR PLACEMENT DETAIL

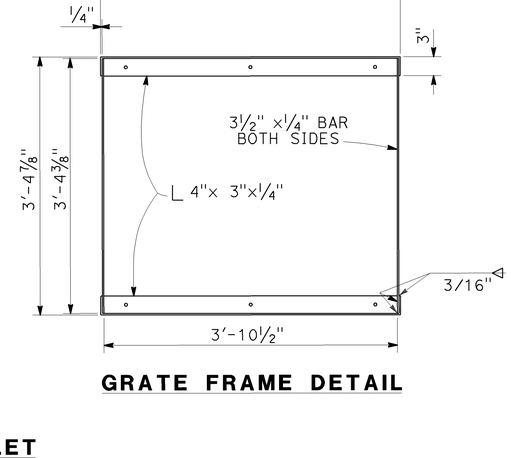

GRATE FRAME DETAIL

GD1 INLET

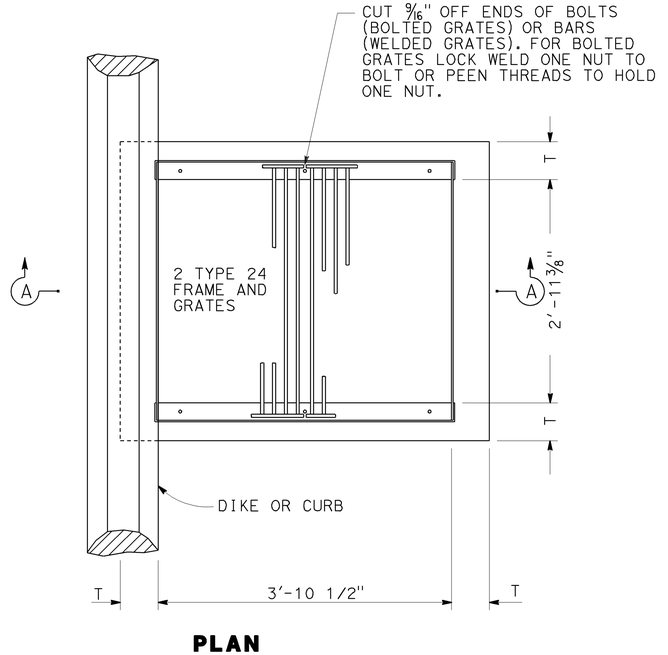

PLAN

NOTES

1. FOR GRATE, FRAME AND ANCHOR PLACEMENT DETAILS, SEE Std PLAN D77A
2. FOR ADDITIONAL DETAILS AND NOTES NOT SHOWN, SEE Std PLAN D73.

MISCELLANEOUS IRON & STEEL

INLET TYPE	GRATE TYPE	WEIGHT (LB)
GD1	24 - 12	580

H	T
8'-0" OR LESS	6"
8'-1" TO 20'-0"	8"

DRAINAGE DETAILS

NO SCALE

DD-2

LAST REVISION 08-01-08 | DATE PLOTTED => 16-DEC-2009 | TIME PLOTTED => 08:36

H:\PDATA\1010587&\CADD\Strmwater\Div\Merged CADD Files\c0F031ic002.dgn | CONSULTANT FUNCTIONAL SUPERVISOR: RICHARD LUCERA | CALCULATED-DESIGNED BY: SCOTT CARTWRIGHT | CHECKED BY: RICHARD LUCERA | REVISED BY | DATE REVISED | 16-DEC-2009 08:36 | trrene

STATE OF CALIFORNIA - DEPARTMENT OF TRANSPORTATION

Caltrans

BORDER LAST REVISED 4/11/2008 | RELATIVE BORDER SCALE IS IN INCHES 0 1 2 3 | USERNAME => trrene | DGN FILE => c0F031ic002.dgn | CU 12220 | EA 0F0311

Dist	COUNTY	ROUTE	POST MILES TOTAL PROJECT	SHEET No.	TOTAL SHEETS
12	Ora	57	16.2/18.6	151	960

REGISTERED CIVIL ENGINEER — 7/15/09 DATE

12-14-09
PLANS APPROVAL DATE

RICHARD LUCERA No. 58089 Exp. 6/30/10 CIVIL — REGISTERED PROFESSIONAL ENGINEER — STATE OF CALIFORNIA

THE STATE OF CALIFORNIA OR ITS OFFICERS OR AGENTS SHALL NOT BE RESPONSIBLE FOR THE ACCURACY OR COMPLETENESS OF SCANNED COPIES OF THIS PLAN SHEET.

RBF CONSULTING
14275 ALTON PKWY
IRVINE, CA 92618

OCTA
550 S. MAIN STREET
ORANGE, CA 92863

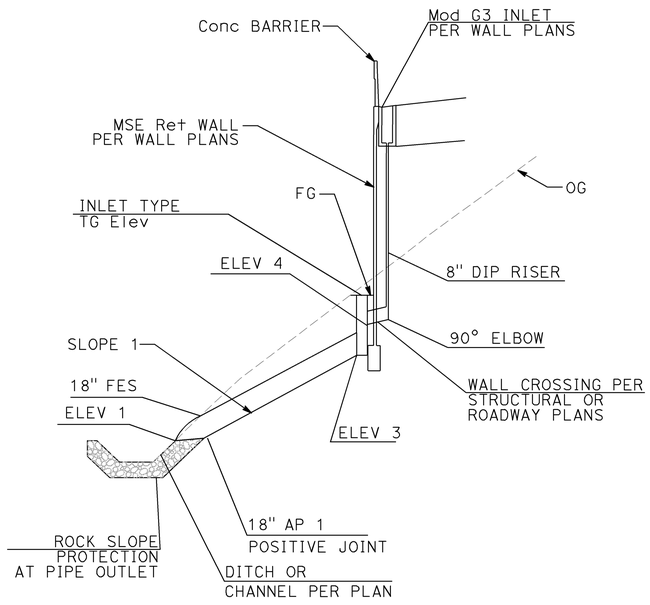

STORM DRAIN PIPE OUTLET DETAIL 1

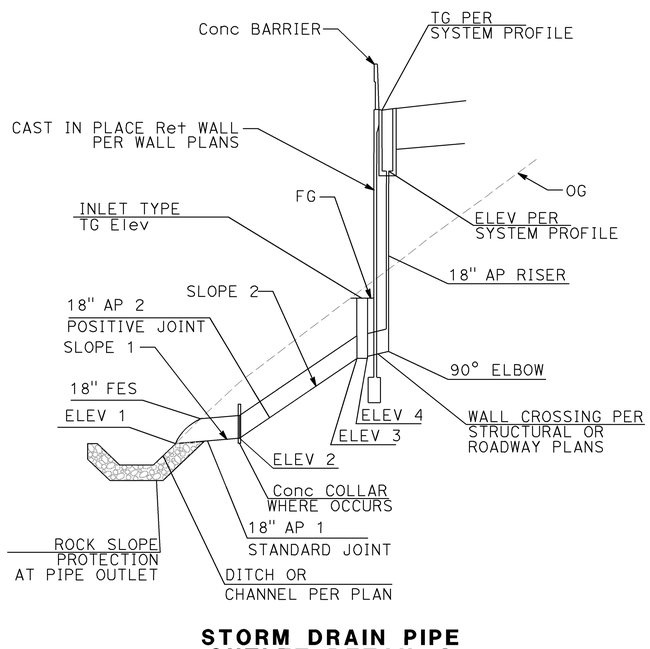

STORM DRAIN PIPE OUTLET DETAIL 2

ABBREVIATIONS:

N/A NOT APPLICABLE

DRAINAGE SYSTEM No.	UNIT	RSP	18" FES	ELEV 1	SLOPE 1	18" AP 1	Conc COLLAR	Elev 2	SLOPE 2	18" AP 2	ELEV 3	ELEV 4	INLET TYPE	TG Elev	RW NUMBER	8" DIP RISER	18"AP RISER
9	a	NO	YES	205.91	1.00%	5.9′	NO	N/A	N/A	N/A	205.97	206.07	G2	208.41	476	26.6′	N/A
10	e	NO	YES	206.86	1.25%	11.2′	NO	N/A	N/A	N/A	207.00	208.60	G2	211.71	476	24.7′	N/A
11	e	NO	YES	213.01	8.87%	12.6′	NO	N/A	N/A	N/A	214.13	216.07	G2	218.60	476	19.6′	N/A
12	e	YES	YES	210.30	25.00%	24.5′	NO	N/A	N/A	N/A	216.25	218.78	G2	222.70	486	N/A	23.5′
13	a	NO	YES	205.53	10.02%	12.3′	NO	N/A	N/A	N/A	206.76	208.57	G2	210.94	476	22.6′	N/A
15	e	NO	NO	209.38	5.00%	5.0′	YES	209.63	37.66%	21.9′	217.35	221.78	G2	225.35	486	N/A	23.0′
16	e	NO	NO	209.87	5.00%	5.0′	YES	210.12	47.26%	26.2′	221.32	224.91	G2	229.32	492	N/A	19.1′
20	a	YES	YES	211.76	25.00%	36.2′	NO	N/A	N/A	N/A	220.53	224.71	G2	228.09	496	24.0′	N/A
21	e	YES	YES	212.21	25.00%	33.9′	NO	N/A	N/A	N/A	220.43	224.71	G2	226.01	496	24.2′	N/A
23	a	YES	YES	211.99	25.00%	35.5′	NO	N/A	N/A	N/A	220.59	224.71	G2	227.39	496	24.2′	N/A
24	a	YES	YES	218.26	19.17%	24.6′	NO	N/A	N/A	N/A	222.90	224.71	G2	226.91	496	24.2′	N/A
25	a	YES	YES	220.44	13.98%	20.3′	NO	N/A	N/A	N/A	223.25	224.71	G2	227.28	496	24.0′	N/A
26	f	YES	YES	221.62	11.52%	16.5′	NO	N/A	N/A	N/A	223.51	224.71	G2	227.61	496	23.8′	N/A

DRAINAGE DETAILS

NO SCALE

DD-3

H:\PDATA\10105878\CADD\Strmwater\Div\Merged CADD Files\c0F031ic003.dgn trrene

STATE OF CALIFORNIA - DEPARTMENT OF TRANSPORTATION — Caltrans

CONSULTANT FUNCTIONAL SUPERVISOR: RICHARD LUCERA

CALCULATED-DESIGNED BY: SCOTT CARTWRIGHT
CHECKED BY: RICHARD LUCERA

REVISED BY | DATE REVISED

16-DEC-2009 08:36

LAST REVISION | DATE PLOTTED => 16-DEC-2009
08-01-08 | TIME PLOTTED => 08:36

BORDER LAST REVISED 4/11/2008

RELATIVE BORDER SCALE IS IN INCHES 0 1 2 3

USERNAME => trrene
DGN FILE => c0F031ic003.dgn

CU 12220

EA 0F0311

Dist	COUNTY	ROUTE	POST MILES TOTAL PROJECT	SHEET No.	TOTAL SHEETS
12	Ora	57	16.2/18.6	152	960

REGISTERED CIVIL ENGINEER — DATE 7/15/09

12-14-09
PLANS APPROVAL DATE

RICHARD LUCERA No. 58089 Exp. 6/30/10 CIVIL — REGISTERED PROFESSIONAL ENGINEER — STATE OF CALIFORNIA

THE STATE OF CALIFORNIA OR ITS OFFICERS OR AGENTS SHALL NOT BE RESPONSIBLE FOR THE ACCURACY OR COMPLETENESS OF SCANNED COPIES OF THIS PLAN SHEET.

RBF CONSULTING
14275 ALTON PKWY
IRVINE, CA 92618

OCTA
550 S. MAIN STREET
ORANGE, CA 92863

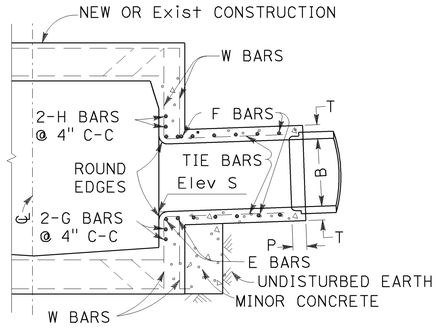

SECTION N-M-P'-O

PROJECTED
ON P-P'-O

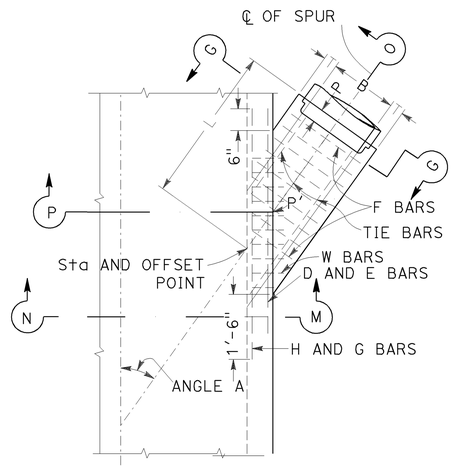

PLAN

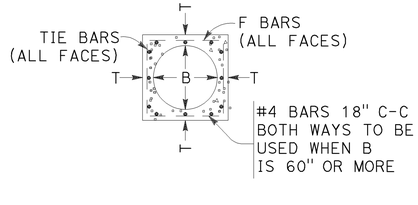

SECTION G-G

JUNCTION STRUCTURE NO 3 - (JS NO 3)

(BASED ON ORANGE COUNTY RDMD STANDARD PLAN 1314)

NOTES:

1. VALUES FOR 'A', 'B', 'L', AND 'ELEV S' ARE SHOWN ON DRAINAGE PLAN OR PROFILE.
2. EMBEDMENT 'P' SHALL BE 5" FOR PIPE DIAMETERS 12" TO 96" AND 8" FOR PIPE DIAMETERS 102" TO 104".
3. REINFORCING STEEL SHALL BE 1½" CLEAR FROM FACE OF CONCRETE UNLESS OTHERWISE SHOWN. W BARS ARE OF SIZE AND SPACING SPECIFIED FOR WALL STEEL ON STD. PLAN D80, AND SHALL BE CUT IN CENTER OF OPENING AND BENT INTO TOP AND BOTTOM OF JUNCTION STRUCTURE. OMIT H BARS WHEN SOFFIT OF SPUR IS 1' OR LESS BELOW SOFFIT OF MAIN LINE, AND OMIT G BARS WHEN INVERT OF SPUR IS 1' OR LESS ABOVE FLOOR OF MAIN LINE.
4. STEEL SCHEDULE:

DIA B	D,E,H,G BARS	F BARS
12" TO 39"	#5	#4 @ 6" C-C
42" TO 84"	#6	#5 @ 6" C-C
90" TO 144"	#7	#6 @ 6" C-C
TIE BARS - #4 @ 18" C-C		

5. JUNCTION STRUCTURE SHALL BE POURED MONOLITHIC WITH MAIN LINE STORM DRAIN.
6. FLOOR OF STRUCTURE SHALL BE STEEL-TROWELED.

TABLE OF VALUES FOR T			
B	T	B	T
12"	6"	63"	10"
15"	6"	66"	10 ¼"
18"	6"	69"	10 ¾"
21"	6"	72"	11"
24"	7"	78"	11 ¾"
27"	7"	84"	12 ½"
30"	7"	90"	13 ¼"
33"	8"	96"	14"
36"	8"	102"	15 ½"
39"	8"	108"	16"
42"	8"	114"	16 ½"
45"	8"	120"	17"
48"	8"	126"	17"
51"	8 ½"	132"	17 ½"
54"	9"	138"	17 ½"
57"	9 ¼"	144"	18"
60"	9 ½"		

DRAINAGE SYSTEM	
No.	UNIT
1	d
2	a
15	f
16	f
46	a
51	a

DRAINAGE DETAILS

NO SCALE

DD-4

LAST REVISION DATE PLOTTED => 16-DEC-2009
TIME PLOTTED => 08:36

H:\PDATA\10105878\CADD\Strmwater\Div\Merged CADD Files\c0F031ic004.dgn trrene 16-DEC-2009 08:36

STATE OF CALIFORNIA - DEPARTMENT OF TRANSPORTATION — Caltrans
CONSULTANT FUNCTIONAL SUPERVISOR: RICHARD LUCERA
CALCULATED-DESIGNED BY: SCOTT CARTWRIGHT
CHECKED BY: RICHARD LUCERA
DETAILED BY
REVISED BY
DATE REVISED

BORDER LAST REVISED 4/11/2008 — RELATIVE BORDER SCALE IS IN INCHES 0 1 2 3 — USERNAME => trrene — DGN FILE => c0F031ic004.dgn — CU 12220 — EA 0F0311

Dist	COUNTY	ROUTE	POST MILES TOTAL PROJECT	SHEET No.	TOTAL SHEETS
12	Ora	57	16.2/18.6	153	960

REGISTERED CIVIL ENGINEER — DATE 7/15/09

RICHARD LUCERA No. 58089 Exp. 6/30/10 CIVIL — REGISTERED PROFESSIONAL ENGINEER — STATE OF CALIFORNIA

12-14-09
PLANS APPROVAL DATE

THE STATE OF CALIFORNIA OR ITS OFFICERS OR AGENTS SHALL NOT BE RESPONSIBLE FOR THE ACCURACY OR COMPLETENESS OF SCANNED COPIES OF THIS PLAN SHEET.

RBF CONSULTING
14275 ALTON PKWY
IRVINE, CA 92618

OCTA
550 S. MAIN STREET
ORANGE, CA 92863

NOTES:

1. PROVIDE CUTOFF WALL AT BEGINNING AND END OF ALL AC AND CONCRETE DITCHES AND CHANNELS.
2. PROVIDE A SMOOTH CONTINUOUS TRANSITION WHERE PIPE CONNECTS TO CONCRETE DITCH.
3. SAW CUT EXISTING CARBON CREEK CHANNEL WALL 3 INCHES BELOW FLOWLINE AND SHAPE TO MATCH CONCRETE DITCH CROSS SECTION. EXTEND CONCRETE DITCH CONCRETE OVER SAW CUT CHANNEL TO CREATE A CONTINUOUS FLOWLINE TO DRAIN INTO CHANNEL.

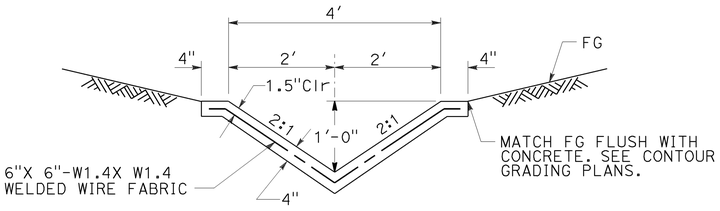

CONCRETE DITCH

DRAINAGE SYSTEM	
No.	UNIT
3	c
54	b
54	c
63	a

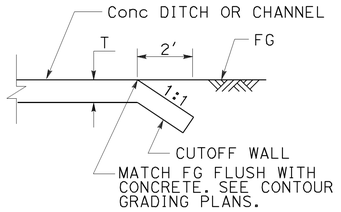

CUTOFF WALL

DRAINAGE SYSTEM	
No.	UNIT
8	c
8	e
54	c
63	a

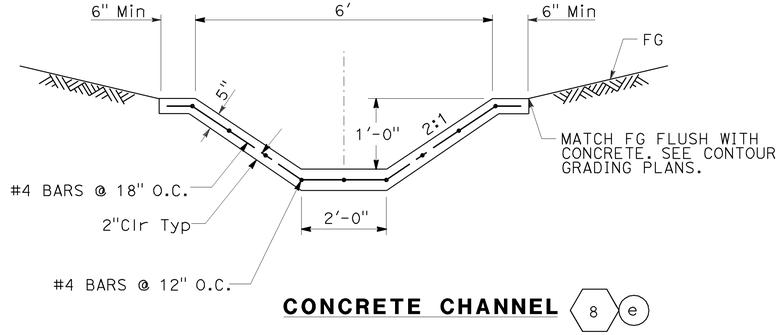

CONCRETE CHANNEL (8)(e)

DRAINAGE DETAILS

NO SCALE

DD-5

H:\PDATA\10105878\CADD\Strmwater\Div\Merged CADD Files\c0F031ic005.dgn trrene 16-DEC-2009 08:36

CALCULATED-DESIGNED BY	CHECKED BY	REVISED BY	DATE REVISED
SCOTT CARTWRIGHT	RICHARD LUCERA		

STATE OF CALIFORNIA - DEPARTMENT OF TRANSPORTATION — Caltrans®

CONSULTANT FUNCTIONAL SUPERVISOR: RICHARD LUCERA

LAST REVISION 08-01-08 — DATE PLOTTED => 16-DEC-2009 — TIME PLOTTED => 08:36

BORDER LAST REVISED 4/11/2008 — RELATIVE BORDER SCALE IS IN INCHES 0 1 2 3 — USERNAME => trrene — DGN FILE => c0F031ic005.dgn — CU 12220 — EA 0F0311

Dist	COUNTY	ROUTE	POST MILES TOTAL PROJECT	SHEET No.	TOTAL SHEETS
12	Ora	57	16.2/18.6	154	960

REGISTERED CIVIL ENGINEER — DATE 7/15/09

RICHARD LUCERA No. 58089 Exp. 6/30/10 CIVIL — REGISTERED PROFESSIONAL ENGINEER — STATE OF CALIFORNIA

12-14-09
PLANS APPROVAL DATE

THE STATE OF CALIFORNIA OR ITS OFFICERS OR AGENTS SHALL NOT BE RESPONSIBLE FOR THE ACCURACY OR COMPLETENESS OF SCANNED COPIES OF THIS PLAN SHEET.

RBF CONSULTING
14275 ALTON PKWY
IRVINE, CA 92618

OCTA
550 S. MAIN STREET
ORANGE, CA 92863

DRAINAGE SYS No.	DRAINAGE SYS UNIT	h	W_T	SIDE SLOPE
8	d	2′	18′	4:1
14	a	1′	6′	2:1
18	a	1′	6′	2:1
19	a	1′	10′	4:1
58	a	1′	10′	4:1
59	a	1′	10′	4:1
61	b	1′	10′	4:1

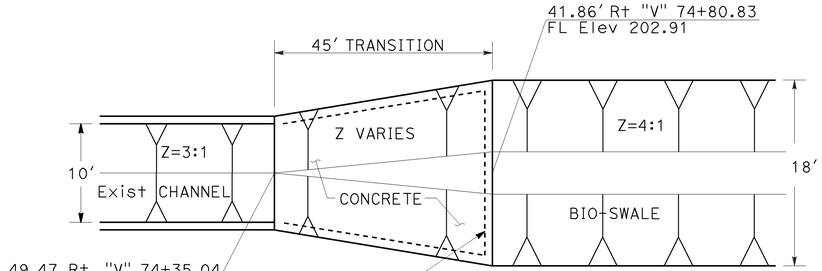

SWALE TO CHANNEL TRANSITION (8) (c)

NTS

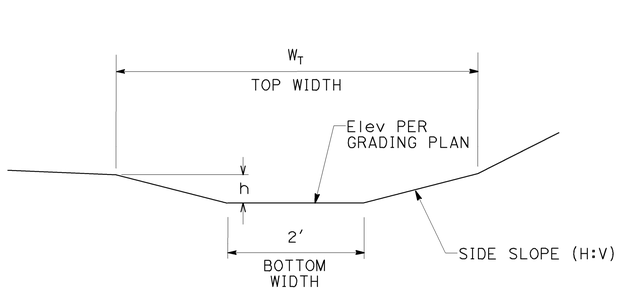

BIO-SWALE

DRAINAGE DETAILS

NO SCALE

DD-6

H:\PDATA\10105878\CADD\Strmwater\Div\Merged CADD Files\c0F031ic006.dgn trrene 16-DEC-2009 08:36

CALCULATED-DESIGNED BY	CHECKED BY	REVISED BY	DATE REVISED
SCOTT CARTWRIGHT	RICHARD LUCERA		

CONSULTANT FUNCTIONAL SUPERVISOR: RICHARD LUCERA

STATE OF CALIFORNIA - DEPARTMENT OF TRANSPORTATION — Caltrans

BORDER LAST REVISED 4/11/2008

RELATIVE BORDER SCALE IS IN INCHES 0 1 2 3

USERNAME => trrene
DGN FILE => c0F031ic006.dgn

CU 12220

EA 0F0311

LAST REVISION 08-01-08
DATE PLOTTED => 16-DEC-2009
TIME PLOTTED => 08:36

Dist	COUNTY	ROUTE	POST MILES TOTAL PROJECT	SHEET No.	TOTAL SHEETS
12	Ora	57	16.2/18.6	155	960

Richard Lucera 7/15/09
REGISTERED CIVIL ENGINEER DATE

RICHARD LUCERA No. 58089 Exp. 6/30/10 CIVIL — REGISTERED PROFESSIONAL ENGINEER — STATE OF CALIFORNIA

12-14-09
PLANS APPROVAL DATE

THE STATE OF CALIFORNIA OR ITS OFFICERS OR AGENTS SHALL NOT BE RESPONSIBLE FOR THE ACCURACY OR COMPLETENESS OF SCANNED COPIES OF THIS PLAN SHEET.

RBF CONSULTING
14275 ALTON PKWY
IRVINE, CA 92618

OCTA
550 S. MAIN STREET
ORANGE, CA 92863

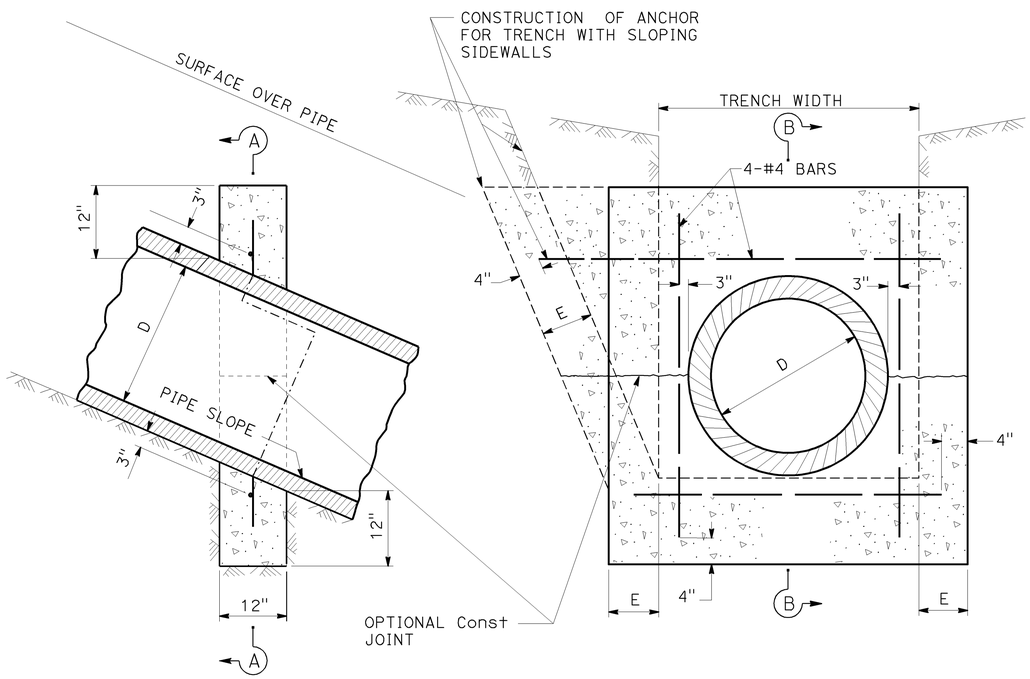

SECTION B-B

SECTION A-A

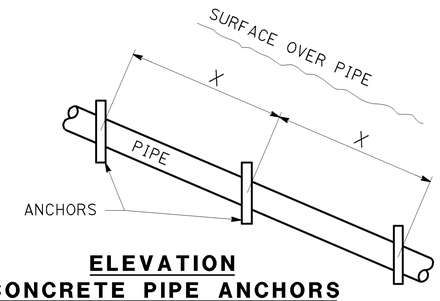

ELEVATION
CONCRETE PIPE ANCHORS

PIPE SLOPE	X DISTANCE
1:1	12′
1½:1	14′
2:1	16′
2½:1	18′
3:1	20′

NOTES:

1- WHERE STORM DRAIN ALTERNATIVE PIPE IS INSTALLED AT 3:1 SLOPE OR STEEPER, AND THE EXTERIOR PROFILE HAS CORRUGATIONS, SLOPE ANCHORS ARE NOT REQUIRED. FOR RCP IN SLOPES 3:1 OR STEEPER, USE THIS DETAIL.

2- ALL REINFORCING STEEL SHALL BE NUMBER 4 BARS.

3- "E" SHALL BE 8 INCHES UNLESS OTHERWISE SPECIFIED.

CONCRETE PIPE ANCHORS

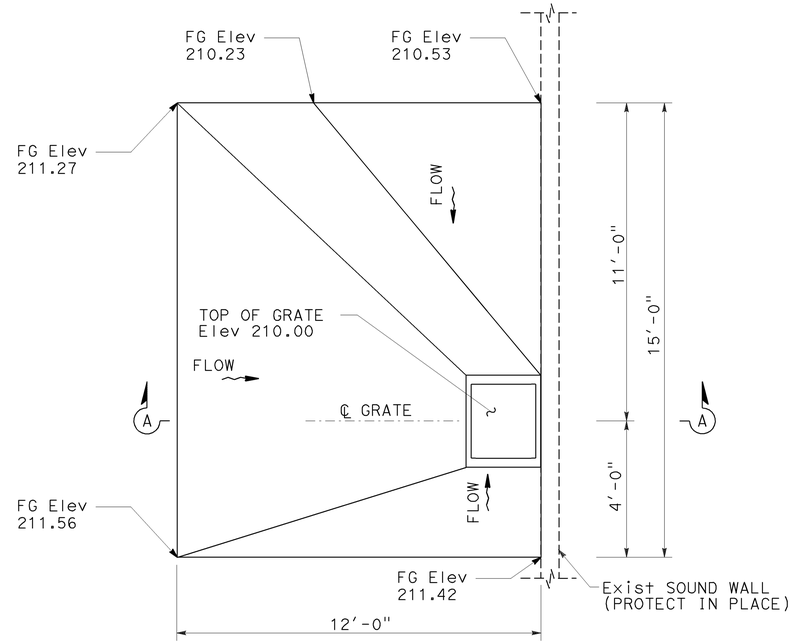

PLAN

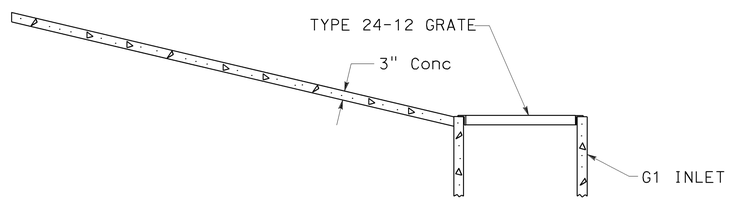

SECTION A-A

CONCRETE APRON DETAIL 22 d

NTS

DRAINAGE DETAILS

NO SCALE

DD-7

STATE OF CALIFORNIA - DEPARTMENT OF TRANSPORTATION
CONSULTANT FUNCTIONAL SUPERVISOR: RICHARD LUCERA
CALCULATED-DESIGNED BY: SCOTT CARTWRIGHT
CHECKED BY: RICHARD LUCERA
REVISED BY
DATE REVISED
16-DEC-2009 08:36
trrene
H:\PDATA\10105878\CADD\Strmwater\Div\Merged CADD Files\c0F031ic007.dgn
LAST REVISION DATE PLOTTED => 16-DEC-2009
TIME PLOTTED => 08:36
08-01-08

BORDER LAST REVISED 4/11/2008
RELATIVE BORDER SCALE IS IN INCHES 0 1 2 3
USERNAME => trrene
DGN FILE => c0F031ic007.dgn
CU 12220
EA 0F0311

Dist	COUNTY	ROUTE	POST MILES TOTAL PROJECT	SHEET No.	TOTAL SHEETS
12	Ora	57	16.2/18.6	156	960

REGISTERED CIVIL ENGINEER — DATE 7/15/09

RICHARD LUCERA No. 58089 Exp. 6/30/10 CIVIL — REGISTERED PROFESSIONAL ENGINEER — STATE OF CALIFORNIA

12-14-09
PLANS APPROVAL DATE

THE STATE OF CALIFORNIA OR ITS OFFICERS OR AGENTS SHALL NOT BE RESPONSIBLE FOR THE ACCURACY OR COMPLETENESS OF SCANNED COPIES OF THIS PLAN SHEET.

RBF CONSULTING
14275 ALTON PKWY
IRVINE, CA 92618

OCTA
550 S. MAIN STREET
ORANGE, CA 92863

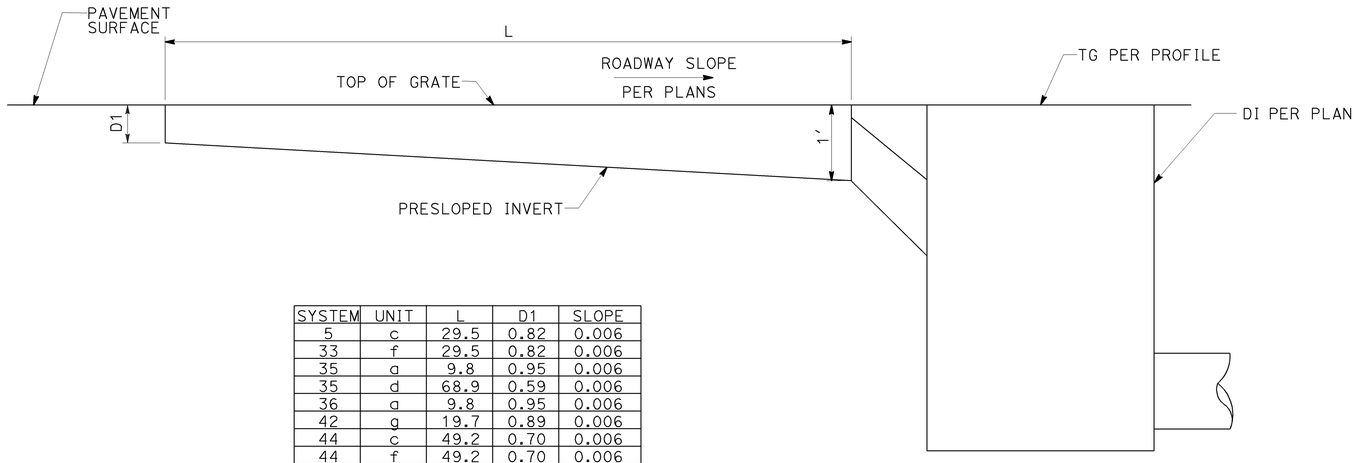

SYSTEM	UNIT	L	D1	SLOPE
5	c	29.5	0.82	0.006
33	f	29.5	0.82	0.006
35	a	9.8	0.95	0.006
35	d	68.9	0.59	0.006
36	a	9.8	0.95	0.006
42	g	19.7	0.89	0.006
44	c	49.2	0.70	0.006
44	f	49.2	0.70	0.006
44	i	42.7	0.74	0.006

GRATED LINE DRAIN

FOR DETAILS NOT SHOWN SEE Std PLAN D98C

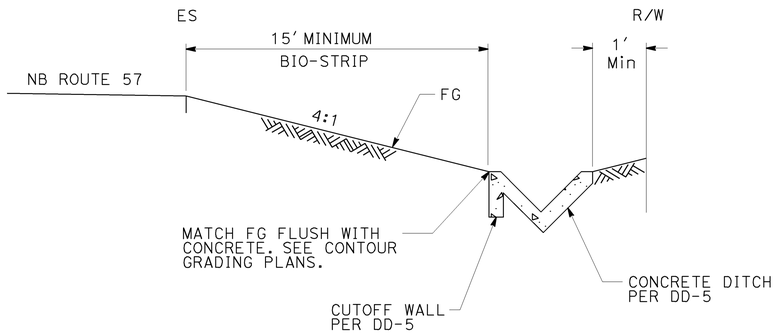

TYPICAL SECTION A-A

63 a

NTS

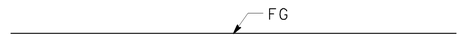

AC OR PCC SEE ROADWAY PLANS

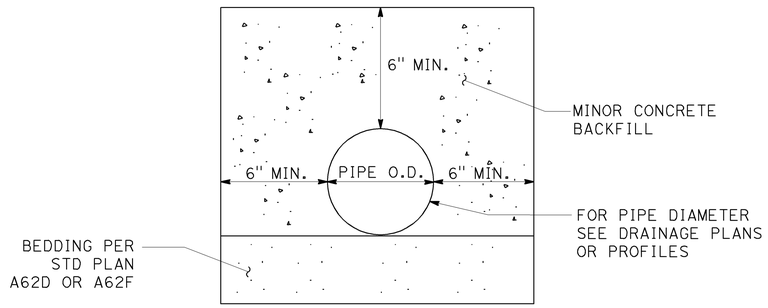

CONCRETE BACKFILL

DRAINAGE DETAILS

NO SCALE

DD-8

LAST REVISION 08-01-08 | DATE PLOTTED => 16-DEC-2009 | TIME PLOTTED => 08:36

STATE OF CALIFORNIA - DEPARTMENT OF TRANSPORTATION | CONSULTANT FUNCTIONAL SUPERVISOR: RICHARD LUCERA | CALCULATED-DESIGNED BY: SCOTT CARTWRIGHT | CHECKED BY: RICHARD LUCERA | REVISED BY | DATE REVISED

H:\PDATA\10105878\CADD\Strmwater\Div\Merged CADD Files\c0F031ic008.dgn trrene 16-DEC-2009 08:36

BORDER LAST REVISED 4/11/2008 | RELATIVE BORDER SCALE IS IN INCHES 0 1 2 3 | USERNAME => trrene | DGN FILE => c0F031ic008.dgn | CU 12220 | EA 0F0311

LEGEND AND ABBREVIATIONS:

G1, G2, G3, Mod G3, GD-1 - INLET TYPES
D - DOWNDRAIN JOINT TYPE
S - STANDARD JOINT TYPE
P - POSITIVE JOINT TYPE
GLD - GRATED LINE DRAIN
DETAIL 1 - STORM DRAIN PIPE OUTLET DETAIL 1
DETAIL 2 - STORM DRAIN PIPE OUTLET DETAIL 2
OSD - OVERSIDE DRAIN
(N) - NOT A SEPARATE PAY ITEM, FOR INFORMATION ONLY.
DIP - DUCTILE IRON PIPE
* - SEE DRAINAGE DETAIL SHEETS
APC - ALTERNATIVE PIPE CULVERTS
RCP - REINFORCED CONCRETE PIPE
FES - FLARED END SECTION

NOTE:
ALL GRATES ARE TYPE 24-12 UNLESS OTHERWISE SPECIFIED.

ALTERNATIVE PIPE CULVERTS		
SIZE	ALLOWABLE PIPE MATERIAL	
18" AP	RCP	CSP
24" AP	RCP	CSP

Dist	COUNTY	ROUTE	POST MILES TOTAL PROJECT	SHEET No.	TOTAL SHEETS
12	Ora	57	16.2/18.6	157	960

REGISTERED CIVIL ENGINEER — DATE 7/15/09

RICHARD LUCERA No. 58089 Exp. 6/30/10 CIVIL — REGISTERED PROFESSIONAL ENGINEER — STATE OF CALIFORNIA

12-14-09
PLANS APPROVAL DATE

THE STATE OF CALIFORNIA OR ITS OFFICERS OR AGENTS SHALL NOT BE RESPONSIBLE FOR THE ACCURACY OR COMPLETENESS OF SCANNED COPIES OF THIS PLAN SHEET.

RBF CONSULTING
14275 ALTON PKWY
IRVINE, CA 92618

OCTA
550 S. MAIN STREET
ORANGE, CA 92863

DRAINAGE QUANTITIES

MINOR CONCRETE (MINOR STRUCTURE)	(N) FRAME & GRATE	Misc IRON & STEEL	REMOVE CULVERT	REMOVE FES	REMOVE OSD	REMOVE CONCRETE (CHANNEL)	REMOVE RSP	REMOVE INLET	ABANDON CULVERT	SAND BACKFILL	CAP INLET	ADJUST INLET	6" WELDED STEEL PIPE (.134" THICK)	8" WELDED STEEL PIPE (.134" THICK)	8" DIP	18" APC	24" APC	24" RCP	GLD	18" ALTERNATIVE FES	MINOR CONCRETE (BACKFILL)	ROCK SLOPE PROTECTION FABRIC	ROCK SLOPE PROTECTION (1 TON, METHOD B)	ROCK SLOPE PROTECTION (1/4 TON, METHOD B)	ROCK SLOPE PROTECTION (LIGHT, METHOD B)	ROCK SLOPE PROTECTION (FACING, METHOD B)	ROCK SLOPE PROTECTION (BACKING No. 2, METHOD B)	MINOR CONCRETE (DITCH LINING)	DITCH EXCAVATION	(N) HEIGHT OF INLET	(N) "JOINT TYPE"	(N) MAXIMUM COVER	DESCRIPTION	STATION	DRAINAGE UNIT	DRAINAGE SYSTEM No.	DRAINAGE PLAN SHEET No.
CY	EA	LB	LF	EA	EA	CY	CY	EA	LF	CY	EA	EA	LF	LF	LF	LF	LF	LF	LF	EA	CY	SQYD	CY	CY	CY	CY	CY	CY	CY	FT		FT					
						17.20																											REMOVE ABM CHANNEL	218.44 Rt "B" 461+53.46 TO	a	1	D-1
																																	233.06 Rt "B" 463+30.46			
			15																													4.6	REMOVE 18" RCP		b		
								1																						6.1			REMOVE DI	208.36 Rt "B" 462+27.52	c		
0.67																																	JS No. 3	14.97 Rt "T" 63+41.76	d		
																		70.4													S	4.5	24" RCP		e		
1.91	2	580																												4.9			GD1 INLET*	21.50 Rt "T" 62+69.93	f		
																27.0														S	3.0	18" AP		g		
1.82	2	580																												4.6			GD1 INLET*	21.50 Rt "T" 62+39.93	h		
																27.0														S	2.7	18" AP		i		
1.64	2	580																												4.0			GD1 INLET*	21.50 Rt "T" 62+09.93	j		
0.67																																	JS No. 3	13.38 Rt "T" 63+55.70	a	2	D-1
																		10.0													S	8.5	24" RCP		b		
3.35	2	580																												9.9			GD1 INLET*	21.50 Rt "T" 63+65.04	c		
																	181.0													S	4.8	24" AP		d		
2.39	2	580																												6.6			GD1 INLET*	21.50 Rt "T" 65+49.00	e		
																	157.4													S	4.8	24" AP		f		
2.32	2	580																												6.4			GD1 INLET*	21.68 Rt "T" 67+09.35	g		
																136.1														S	4.5	18" AP		h		
1.67	2	580																												4.1			GD1 INLET*	33.50 Rt "T" 68+48.00	i		
						26.96																											REMOVE DITCH	29.14 Rt "T" 63+53.44 TO	a	3	D-1
																																	30.91 Rt "T" 67+12.07			
																												0.15					DITCH TO CHANNEL Conn	29.14 Rt "T" 63+53.44	b		
																												26.96	54				Conc DITCH	30.91 Rt "T" 67+12.07 TO	c		
																																		29.14 Rt "T" 63+53.44			
16.43	14	4060	15			44.16		1								190.1	338.4	80.4												27.11	54				SHEET TOTAL				

DRAINAGE QUANTITIES

DQ-1

H:\PDATA\10105878\CADD\Strmwater\Div\Merged CADD Files\c0F031id001.dgn
16-DEC-2009 07:35
trmartin
CALCULATED-DESIGNED BY: SCOTT CARTWRIGHT
CHECKED BY: RICHARD LUCERA
REVISED BY
DATE REVISED
CONSULTANT FUNCTIONAL SUPERVISOR: RICHARD LUCERA
STATE OF CALIFORNIA - DEPARTMENT OF TRANSPORTATION
Caltrans
LAST REVISION 08-01-08
DATE PLOTTED => 16-DEC-2009
TIME PLOTTED => 07:35
BORDER LAST REVISED 4/11/2008
RELATIVE BORDER SCALE IS IN INCHES 0 1 2 3
USERNAME => trmartin
DGN FILE => c0F031id001.dgn
CU 12220
EA 0F0311

Dist	COUNTY	ROUTE	POST MILES TOTAL PROJECT	SHEET No.	TOTAL SHEETS
12	Ora	57	16.2/18.6	158	960

REGISTERED CIVIL ENGINEER — DATE: 7/15/09

RICHARD LUCERA No. 58089 Exp. 6/30/10 CIVIL — REGISTERED PROFESSIONAL ENGINEER — STATE OF CALIFORNIA

12-14-09
PLANS APPROVAL DATE

THE STATE OF CALIFORNIA OR ITS OFFICERS OR AGENTS SHALL NOT BE RESPONSIBLE FOR THE ACCURACY OR COMPLETENESS OF SCANNED COPIES OF THIS PLAN SHEET.

RBF CONSULTING
14275 ALTON PKWY
IRVINE, CA 92618

OCTA
550 S. MAIN STREET
ORANGE, CA 92863

DRAINAGE QUANTITIES

MINOR CONCRETE (MINOR STRUCTURE)	FRAME & GRATE (N)	Misc IRON & STEEL	REMOVE CULVERT	REMOVE FES	REMOVE OSD	REMOVE CONCRETE (CHANNEL)	REMOVE RSP	REMOVE INLET	ABANDON CULVERT	SAND BACKFILL	CAP INLET	ADJUST INLET	6" WELDED STEEL PIPE (.134" THICK)	8" WELDED STEEL PIPE (.134" THICK)	8" DIP	18" APC	24" APC	24" RCP	GLD	18" ALTERNATIVE FES	MINOR CONCRETE (BACKFILL)	ROCK SLOPE PROTECTION FABRIC	ROCK SLOPE PROTECTION (1 TON, METHOD B)	ROCK SLOPE PROTECTION (1/4 TON, METHOD B)	ROCK SLOPE PROTECTION (LIGHT, METHOD B)	ROCK SLOPE PROTECTION (FACING, METHOD B)	ROCK SLOPE PROTECTION (BACKING No. 2, METHOD B)	MINOR CONCRETE (DITCH LINING)	DITCH EXCAVATION	HEIGHT OF INLET (N)	"JOINT TYPE" (N)	MAXIMUM COVER (N)	DESCRIPTION	STATION	DRAINAGE UNIT	DRAINAGE SYSTEM No.	DRAINAGE PLAN SHEET No.
CY	EA	LB	LF	EA	EA	CY	CY	EA	LF	CY	EA	EA	LF	LF	LF	LF	LF	LF	LF	EA	CY	SQYD	CY	CY	CY	CY	CY	CY	CY	FT		FT					
									127	14.82																							Abn 24" CMP		a	4	D-1
								1																						5.9			REMOVE DI	113.15 Rt "B" 465+10.57	b		
			28																													3.6	REMOVE 18" RCP		c		
								1																						5.1			REMOVE DI	113.08 Rt "B" 465+41.46	d		
			27																													3.5	REMOVE 18" RCP		e		
								1																						5.1			REMOVE DI	112.90 Rt "B" 465+71.26	f		
																	31.6														S	5.0	24" AP		a	5	D-1
1.82	1	326																												5.0			G2 INLET	128.13 Rt "B" 465+49.66	b		
																			29.5														GLD		c		
																	32.0														S	2.7	24" AP		d		
1.81	2	580																												4.6			GD1 INLET*	129.03 Rt "B" 465+85.00	e		
																	52.0														S	2.7	24" AP		f		
1.81	2	580																												4.6			GD1 INLET*	128.99 Rt "B" 466+40.74	g		
																	37.0														S	2.7	24" AP		h		
1.81	2	580																												4.6			GD1 INLET*	128.78 Rt "B" 466+81.25	i		
			16																													2.7	18" CMP		a	6	D-2
								1																						3.0			REMOVE DI	92.70 Rt "B" 474+26.25	b		
																6.0																	18"x18"x18" TEE Conn		c		
																4.9																	18" AP RISER		d		
1.78	2	580																												4.5			GD1 INLET*	109.14 Rt "B" 474+22.60	e		
																74.4														S	3.2	18" AP		f		
1.74	2	580																												4.4			GD1 INLET*	108.42 Rt "B" 475+00.00	g		
																187.0														S	3.0	18" AP		h		
1.67	2	580																												4.1			GD1 INLET*	106.64 Rt"B" 476+90.00	i		
12.44	13	3806	72					4	127	14.8						272.3	152.6		29.5															SHEET TOTAL				

DRAINAGE QUANTITIES

DQ-2

H:\PDATA\10105878\CADD\Strmwater\Div\Merged CADD Files\c0F031id002.dgn
16-DEC-2009 07:35
trmartin

CALCULATED-DESIGNED BY: SCOTT CARTWRIGHT
CHECKED BY: RICHARD LUCERA
REVISED BY
DATE REVISED
CONSULTANT FUNCTIONAL SUPERVISOR: RICHARD LUCERA
STATE OF CALIFORNIA - DEPARTMENT OF TRANSPORTATION
Caltrans

LAST REVISION DATE PLOTTED => 16-DEC-2009
08-01-08 TIME PLOTTED => 07:35

BORDER LAST REVISED 4/11/2008 | RELATIVE BORDER SCALE IS IN INCHES 0 1 2 3 | USERNAME => trmartin | DGN FILE => c0F031id002.dgn | CU 12220 | EA 0F0311

Dist	COUNTY	ROUTE	POST MILES TOTAL PROJECT	SHEET No.	TOTAL SHEETS
12	Ora	57	16.2/18.6	159	960

REGISTERED CIVIL ENGINEER — DATE 7/15/09

RICHARD LUCERA No. 58089 Exp. 6/30/10 CIVIL — REGISTERED PROFESSIONAL ENGINEER — STATE OF CALIFORNIA

12-14-09
PLANS APPROVAL DATE

THE STATE OF CALIFORNIA OR ITS OFFICERS OR AGENTS SHALL NOT BE RESPONSIBLE FOR THE ACCURACY OR COMPLETENESS OF SCANNED COPIES OF THIS PLAN SHEET.

RBF CONSULTING
14275 ALTON PKWY
IRVINE, CA 92618

OCTA
550 S. MAIN STREET
ORANGE, CA 92863

DRAINAGE QUANTITIES

MINOR CONCRETE (MINOR STRUCTURE) CY	FRAME & GRATE (N) EA	Misc IRON & STEEL LB	REMOVE CULVERT LF	REMOVE FES EA	REMOVE OSD EA	REMOVE CONCRETE (CHANNEL) CY	REMOVE RSP CY	REMOVE INLET EA	ABANDON CULVERT LF	SAND BACKFILL CY	CAP INLET EA	ADJUST INLET EA	6" WELDED STEEL PIPE (.134" THICK) LF	8" WELDED STEEL PIPE (.134" THICK) LF	8" DIP LF	18" APC LF	24" APC LF	24" RCP LF	GLD LF	18" ALTERNATIVE FES EA	MINOR CONCRETE (BACKFILL) CY	ROCK SLOPE PROTECTION FABRIC SQYD	ROCK SLOPE PROTECTION (1 TON, METHOD B) CY	ROCK SLOPE PROTECTION (1/4 TON, METHOD B) CY	ROCK SLOPE PROTECTION (LIGHT, METHOD B) CY	ROCK SLOPE PROTECTION (FACING, METHOD B) CY	ROCK SLOPE PROTECTION (BACKING No. 2, METHOD B) CY	MINOR CONCRETE (DITCH LINING) CY	DITCH EXCAVATION CY	HEIGHT OF INLET (N) FT	"JOINT TYPE" (N)	MAXIMUM COVER (N) FT	DESCRIPTION	STATION	DRAINAGE UNIT	DRAINAGE SYSTEM No.	DRAINAGE PLAN SHEET No.
																59.6															S	3.1	18" AP		a	7	D-2
1.67	2	580																											4.1			GD1 INLET*	109.88 Rt "B" 473+60.00	b		
						69.04																												REMOVE CHANNEL	41.86 Rt "V" 74+80.83 TO	a	8	D-2
																																		52.06 Rt "V" 77+00.02			
						22.22																												REMOVE DITCH	52.06 Rt "V" 77+00.02 TO	b		
																																			40.10 Rt "V" 83+22.16			
																												7.08	20					SWALE TO Chnl Trans	41.68 Rt "V" 74+80.83 TO	c		
																																			49.47 Rt "V" 74+35.04			
																													63					BIO-SWALE	45.29 Rt "V" 76+50.41 TO	d		
																																			41.68 Rt "V" 74+80.83			
																												75.00	175					Conc CHANNEL	40.10 Rt "V" 83+22.16 TO	e		
																																			45.29 Rt "V" 76+50.41			
1.16	1	326													26.6	5.9				1									2.4					DETAIL 1	32.67 Rt "V" 79+00.21	a	9	D-3
	1	326																																Mod G3 INLET*	32.67 Rt "V" 79+00.21	b		
							0.33																												REMOVE RSP	38.00 Rt "V" 79+93.09	a	10	D-3
				1																														REMOVE FES	37.07 Rt "V" 79+93.09	b		
			14																														1.0	REMOVE 12" CMP		c		
					1																													REMOVE OSD	20.67 Rt "V" 79+93.70	d		
1.74	1	326													24.7	11.2				1									4.7					DETAIL 1	25.95 Rt "V" 79+91.16	e		
	1	326																																Mod G3 INLET*	25.95 Rt "V" 79+91.16	f		
							0.33																												REMOVE RSP	33.50 Rt "V" 82+73.37	a	11	D-3
				1																														REMOVE FES	32.33 Rt "V" 82+73.37	b		
4.57	6	1884	14	2	1	91.26	0.66								51.3	76.7				2									82.08	258				SHEET TOTAL				

DRAINAGE QUANTITIES

DQ-3

H:\PDATA\10105878\CADD\Strmwater\Div\Merged CADD Files\c0F031id003.dgn 16-DEC-2009 07:35 trmartin

STATE OF CALIFORNIA - DEPARTMENT OF TRANSPORTATION — Caltrans

CALCULATED-DESIGNED BY: SCOTT CARTWRIGHT
CHECKED BY: RICHARD LUCERA
CONSULTANT FUNCTIONAL SUPERVISOR: RICHARD LUCERA
REVISED BY
DATE REVISED

LAST REVISION DATE PLOTTED => 16-DEC-2009
TIME PLOTTED => 07:35

BORDER LAST REVISED 4/11/2008 — RELATIVE BORDER SCALE IS IN INCHES 0 1 2 3 — USERNAME => trmartin — DGN FILE => c0F031id003.dgn — CU 12220 — EA 0F0311

Dist	COUNTY	ROUTE	POST MILES TOTAL PROJECT	SHEET No.	TOTAL SHEETS
12	Ora	57	16.2/18.6	160	960

Richard Lucera 7/15/09
REGISTERED CIVIL ENGINEER DATE

12-14-09
PLANS APPROVAL DATE

RICHARD LUCERA No. 58089 Exp. 6/30/10 CIVIL — REGISTERED PROFESSIONAL ENGINEER — STATE OF CALIFORNIA

THE STATE OF CALIFORNIA OR ITS OFFICERS OR AGENTS SHALL NOT BE RESPONSIBLE FOR THE ACCURACY OR COMPLETENESS OF SCANNED COPIES OF THIS PLAN SHEET.

RBF CONSULTING
14275 ALTON PKWY
IRVINE, CA 92618

OCTA
550 S. MAIN STREET
ORANGE, CA 92863

DRAINAGE QUANTITIES

MINOR CONCRETE (MINOR STRUCTURE)	(N) FRAME & GRATE	Misc IRON & STEEL	REMOVE CULVERT	REMOVE FES	REMOVE OSD	REMOVE CONCRETE (CHANNEL)	REMOVE RSP	REMOVE INLET	ABANDON CULVERT	SAND BACKFILL	CAP INLET	ADJUST INLET	6" WELDED STEEL PIPE (.134" THICK)	8" WELDED STEEL PIPE (.134" THICK)	8" DIP	18" APC	24" APC	24" RCP	GLD	18" ALTERNATIVE FES	MINOR CONCRETE (BACKFILL)	ROCK SLOPE PROTECTION FABRIC	ROCK SLOPE PROTECTION (1 TON, METHOD B)	ROCK SLOPE PROTECTION (1/4 TON, METHOD B)	ROCK SLOPE PROTECTION (LIGHT, METHOD B)	ROCK SLOPE PROTECTION (FACING, METHOD B)	ROCK SLOPE PROTECTION (BACKING No. 2, METHOD B)	MINOR CONCRETE (DITCH LINING)	DITCH EXCAVATION	(N) HEIGHT OF INLET	(N) "JOINT TYPE"	(N) MAXIMUM COVER	DESCRIPTION	STATION	DRAINAGE UNIT	DRAINAGE SYSTEM No.	DRAINAGE PLAN SHEET No.
CY	EA	LB	LF	EA	EA	CY	CY	EA	LF	CY	EA	EA	LF	LF	LF	LF	LF	LF	LF	EA	CY	SQYD	CY	CY	CY	CY	CY	CY	CY	FT		FT					
			24																													1.0	REMOVE 12" CMP		c	11	D-3
					1																												REMOVE OSD	5.47 R† "V" 82+73.58	d		
1.69	1	326													19.6	12.6				1										4.5			DETAIL 1	19.98 R† "V" 82+71.67	e		
	1	326																															Mod G3 INLET*	19.98 R† "V" 82+71.67	f		
							0.33																										REMOVE RSP	143.50 R† "V" 486+25.18	a	12	D-3
				1																													REMOVE FES	142.60 R† "V" 486+25.18	b		
			44																													1.0	REMOVE 12" CMP		c		
					1																												REMOVE OSD	95.69 R† "B" 486+22.47	d		
2.20	1	326														48.0				1		47.33		22.00			8.33			6.5			DETAIL 2	111.72 R† "B" 486+23.40	e		
2.07	2	580															42.4													5.5			GD1 INLET*	111.72 R† "B" 486+23.40	f		
																															S	4.1	24" AP		g		
1.90	2	580																												4.9			GD1 INLET*	112.65 R† "B" 485+78.00	h		
																37.0														S	3.6	18" AP		i		
1.75	2	580																												4.4			GD1 INLET*	113.44 R† "B" 485+38.01	j		
1.62	1	326													22.6	12.3				1										4.2			DETAIL 1	29.62 R† "V" 77+81.65	a	13	D-3
	1	326																															Mod G3 INLET*	29.62 R† "V" 77+81.65	b		
																													28				BIO-SWALE	143.10 R† "B" 488+64.19	a	14	D-3
																																		152.52 R† "B" 486+68.80			
							0.33																										REMOVE RSP	135.00 R† "B" 488+59.51	a	15	D-4
				1																													REMOVE FES	133.98 R† "B" 488+59.51	b		
			41																													1.0	REMOVE 12" CMP		c		
					1																												REMOVE OSD	90.27 R† "B" 488+57.19	d		
																						34.82		11.61			4.40						RSP		e		
11.23	11	3370	110	2	3		0.66								42.2	109.9	42.4			3		82.15		33.61			12.73		28				SHEET TOTAL				

DRAINAGE QUANTITIES

DQ-4

Dist	COUNTY	ROUTE	POST MILES TOTAL PROJECT	SHEET No.	TOTAL SHEETS
12	Ora	57	16.2/18.6	161	960

REGISTERED CIVIL ENGINEER — DATE 7/15/09

RICHARD LUCERA No. 58089 Exp. 6/30/10 CIVIL — REGISTERED PROFESSIONAL ENGINEER — STATE OF CALIFORNIA

12-14-09
PLANS APPROVAL DATE

THE STATE OF CALIFORNIA OR ITS OFFICERS OR AGENTS SHALL NOT BE RESPONSIBLE FOR THE ACCURACY OR COMPLETENESS OF SCANNED COPIES OF THIS PLAN SHEET.

RBF CONSULTING
14275 ALTON PKWY
IRVINE, CA 92618

OCTA
550 S. MAIN STREET
ORANGE, CA 92863

DRAINAGE QUANTITIES

MINOR CONCRETE (MINOR STRUCTURE)	FRAME & GRATE (N)	Misc IRON & STEEL	REMOVE CULVERT	REMOVE FES	REMOVE OSD	REMOVE CONCRETE (CHANNEL)	REMOVE RSP	REMOVE INLET	ABANDON CULVERT	SAND BACKFILL	CAP INLET	ADJUST INLET	6" WELDED STEEL PIPE (.134" THICK)	8" WELDED STEEL PIPE (.134" THICK)	8" DIP	18" APC	24" APC	24" RCP	GLD	18" ALTERNATIVE FES	MINOR CONCRETE (BACKFILL)	ROCK SLOPE PROTECTION FABRIC	ROCK SLOPE PROTECTION (1 TON, METHOD B)	ROCK SLOPE PROTECTION (1/4 TON, METHOD B)	ROCK SLOPE PROTECTION (LIGHT, METHOD B)	ROCK SLOPE PROTECTION (FACING, METHOD B)	ROCK SLOPE PROTECTION (BACKING No. 2, METHOD B)	MINOR CONCRETE (DITCH LINING)	DITCH EXCAVATION	HEIGHT OF INLET (N)	"JOINT TYPE" (N)	MAXIMUM COVER (N)	DESCRIPTION	STATION	DRAINAGE UNIT	DRAINAGE SYSTEM No.	DRAINAGE PLAN SHEET No.
CY	EA	LB	LF	EA	EA	CY	CY	EA	LF	CY	EA	EA	LF	LF	LF	LF	LF	LF	LF	EA	CY	SQYD	CY	CY	CY	CY	CY	CY	CY	FT		FT				
0.67																																	JS No. 3	139.45 R† "B" 488+59.80	f	15	D-4
3.63	1	326														49.9														8.0			DETAIL 2	107.04 R† "B" 488+58.08	g		
1.84	2	580																												4.7			GD1 INLET*	107.04 R† "B" 488+58.08	h		
							0.33																										REMOVE RSP	136.50 R† "B" 492+46.32	a	16	D-4
				1																													REMOVE FES	135.47 R† "B" 492+46.32	b		
			45																													1.0	REMOVE 12" CMP		c		
					1																												REMOVE OSD	87.70 R† "B" 492+46.04	d		
																						43.90	19.00		8.80								RSP		e		
0.67																																	JS No. 3	140.14 R† "B" 492+46.21	f		
3.63	1	326														50.3														8.0			DETAIL 2	104.50 R† "B" 492+46.10	g		
1.87	2	580																												4.8			GD1 INLET*	104.50 R† "B" 492+46.10	h		
																150.9															S	3.4	18" AP		i		
1.77	2	580																												4.5			GD1 INLET*	104.50 R† "B" 494+00.00	j		
																	31.6														S	3.4	24" AP		a	17	D-4
1.93	2	580																												5.0			GD1 INLET*	104.50 R† "B" 492+11.51	b		
																31.5															S	3.2	18" AP		c		
1.69	2	580																												4.2			GD1 INLET*	104.50 R† "B" 491+77.00	d		
																													31			BIO-SWALE	144.89 R† "B" 492+42.42	a	18	D-4
																																		152.12 R† "B" 494+65.60			
																													29			BIO-SWALE	148.64 R† "B" 497+49.00	a	19	D-4
																																		152.11 R† "B" 495+76.79			
2.48	1	326													24.0	36.2				1		18.2				6.33				7.6			DETAIL 1	104.50 R† "B" 496+80.01	a	20	D-4
20.17	13	3878	45	1	1		0.33								24.0	318.8	31.6			1		62.06	19.00		8.80	6.33				60				SHEET TOTAL				

DRAINAGE QUANTITIES

DQ-5

Dist	COUNTY	ROUTE	POST MILES TOTAL PROJECT	SHEET No.	TOTAL SHEETS
12	Ora	57	16.2/18.6	162	960

REGISTERED CIVIL ENGINEER — DATE 7/15/09

RICHARD LUCERA No. 58089 Exp. 6/30/10 CIVIL — REGISTERED PROFESSIONAL ENGINEER — STATE OF CALIFORNIA

12-14-09
PLANS APPROVAL DATE

THE STATE OF CALIFORNIA OR ITS OFFICERS OR AGENTS SHALL NOT BE RESPONSIBLE FOR THE ACCURACY OR COMPLETENESS OF SCANNED COPIES OF THIS PLAN SHEET.

RBF CONSULTING
14275 ALTON PKWY
IRVINE, CA 92618

OCTA
550 S. MAIN STREET
ORANGE, CA 92863

DRAINAGE QUANTITIES

MINOR CONCRETE (MINOR STRUCTURE)	FRAME & GRATE (N)	Misc IRON & STEEL	REMOVE CULVERT	REMOVE FES	REMOVE OSD	REMOVE CONCRETE (CHANNEL)	REMOVE RSP	REMOVE INLET	ABANDON CULVERT	SAND BACKFILL	CAP INLET	ADJUST INLET	6" WELDED STEEL PIPE (.134" THICK)	8" WELDED STEEL PIPE (.134" THICK)	8" DIP	18" APC	24" APC	24" RCP	GLD	18" ALTERNATIVE FES	MINOR CONCRETE (BACKFILL)	ROCK SLOPE PROTECTION FABRIC	ROCK SLOPE PROTECTION (1 TON, METHOD B)	ROCK SLOPE PROTECTION (1/4 TON, METHOD B)	ROCK SLOPE PROTECTION (LIGHT, METHOD B)	ROCK SLOPE PROTECTION (FACING, METHOD B)	ROCK SLOPE PROTECTION (BACKING No. 2, METHOD B)	MINOR CONCRETE (DITCH LINING)	DITCH EXCAVATION	HEIGHT OF INLET (N)	"JOINT TYPE" (N)	MAXIMUM COVER (N)	DESCRIPTION	STATION	DRAINAGE UNIT	DRAINAGE SYSTEM No.	DRAINAGE PLAN SHEET No.
CY	EA	LB	LF	EA	EA	CY	CY	EA	LF	CY	EA	EA	LF	LF	LF	LF	LF	LF	LF	EA	CY	SQYD	CY	CY	CY	CY	CY	CY	CY	FT		FT				
	1	326																															Mod G3 INLET*	104.50 Rt "B" 496+80.01	b	20	D-4
							0.33																									REMOVE RSP	144.80 Rt "B" 497+49.12	a	21	D-4
				1																												REMOVE FES	143.74 Rt "B" 497+49.12	b		
			56																												4.1	REMOVE 12" CMP		c		
								1																						5.1		REMOVE DI	85.68 Rt "B" 497+46.68	d		
1.97	1	326													24.2	33.9				1		18.2				6.33			5.6			DETAIL 1	104.50 Rt "B" 497+45.04	e		
	1	326																														Mod G3 INLET*	104.50 Rt "B" 497+45.04	f		
								1																					1.0			REMOVE DI	157.24 Rt "B" 495+76.69	a	22	D-4
						1.67																										REMOVE Conc APRON		b		
0.53	1	326																											1.1			G1 INLET	157.24 Rt "B" 495+76.69	c		
1.67																																Conc APRON		d		
2.28	1	326													24.2	35.5				1		18.2				6.33			6.8			DETAIL 1	104.50 Rt "B" 497+10.01	a	23	D-4
	1	326																														Mod G3 INLET*	104.50 Rt "B" 497+10.01	b		
1.57	1	326													24.2	24.6				1		18.2				6.33			4.0			DETAIL 1	104.50 Rt "B" 502+10.00	a	24	D-5
	1	326																														Mod G3 INLET*	104.50 Rt "B" 502+10.00	b		
1.57	1	326													24.0	20.3				1		18.2				6.33			4.0			DETAIL 1	104.50 Rt "B" 503+35.00	a	25	D-5
	1	326																														Mod G3 INLET*	104.50 Rt "B" 503+35.00	b		
				1																												REMOVE FES	125.16 Rt "B" 504+47.79	a	26	D-5
			43																												7.0	REMOVE 18" CMP		b		
								1																					8.5			REMOVE DI	84.13 Rt "B" 504+46.73	c		
			25																												7.0	REMOVE 18" CMP		d		
9.58	10	3260	124	2		1.67	0.33	3							96.6	114.3				4		72.64				25.32						SHEET TOTAL				

DRAINAGE QUANTITIES

DQ-6

Dist	COUNTY	ROUTE	POST MILES TOTAL PROJECT	SHEET No.	TOTAL SHEETS
12	Ora	57	16.2/18.6	163	960

REGISTERED CIVIL ENGINEER — DATE 7/15/09

RICHARD LUCERA No. 58089 Exp. 6/30/10 CIVIL — REGISTERED PROFESSIONAL ENGINEER — STATE OF CALIFORNIA

12-14-09
PLANS APPROVAL DATE

THE STATE OF CALIFORNIA OR ITS OFFICERS OR AGENTS SHALL NOT BE RESPONSIBLE FOR THE ACCURACY OR COMPLETENESS OF SCANNED COPIES OF THIS PLAN SHEET.

RBF CONSULTING
14275 ALTON PKWY
IRVINE, CA 92618

OCTA
550 S. MAIN STREET
ORANGE, CA 92863

DRAINAGE QUANTITIES

MINOR CONCRETE (MINOR STRUCTURE)	FRAME & GRATE (N)	Misc IRON & STEEL	REMOVE CULVERT	REMOVE FES	REMOVE OSD	REMOVE CONCRETE (CHANNEL)	REMOVE RSP	REMOVE INLET	ABANDON CULVERT	SAND BACKFILL	CAP INLET	ADJUST INLET	6" WELDED STEEL PIPE (.134" THICK)	8" WELDED STEEL PIPE (.134" THICK)	8" DIP	18" APC	24" APC	24" RCP	GLD	18" ALTERNATIVE FES	MINOR CONCRETE (BACKFILL)	ROCK SLOPE PROTECTION FABRIC	ROCK SLOPE PROTECTION (1 TON, METHOD B)	ROCK SLOPE PROTECTION (1/4 TON, METHOD B)	ROCK SLOPE PROTECTION (LIGHT, METHOD B)	ROCK SLOPE PROTECTION (FACING, METHOD B)	ROCK SLOPE PROTECTION (BACKING No. 2, METHOD B)	MINOR CONCRETE (DITCH LINING)	DITCH EXCAVATION	HEIGHT OF INLET (N)	"JOINT TYPE" (N)	MAXIMUM COVER (N)	DESCRIPTION	STATION	DRAINAGE UNIT	DRAINAGE SYSTEM No.	DRAINAGE PLAN SHEET No.
CY	EA	LB	LF	EA	EA	CY	CY	EA	LF	CY	EA	EA	LF	LF	LF	LF	LF	LF	LF	EA	CY	SQYD	CY	CY	CY	CY	CY	CY	CY	FT		FT				
								1																						4.5			REMOVE DI	84.09 Rt "B" 504+21.04	e	26	D-5
1.59	1	326													23.8	16.5				1		18.2				6.33				4.1			DETAIL 1	104.50 Rt "B" 504+45.04	f		
	1	326																															Mod G3 INLET*	104.50 Rt "B" 504+45.04	g		
			124																													7.0	REMOVE 18" CMP		a	27	D-5
								1																						5.0			REMOVE DI	80.00 Rt "B" 505+72.18	b		
														11.5																				8" STEEL PIPE	92.29 Rt "B" 506+17.87	a	28	D-5
														2.0																				45° ELBOW	102.50 Rt "B" 506+12.50	b		
														23.8																				8" STEEL PIPE		c		
														2.0																				90° ELBOW	102.50 Rt "B" 505+87.18	d		
														17.1																				8" STEEL PIPE RISER		e		
1.93	2	580																												5.0			GD1 INLET*	104.50 Rt "B" 505+87.18	f		
																																	DELETED			29	
								1																						4.6			REMOVE DI	3.62 Rt "G-3" 11+39.23	a	30	D-5
			24																												2.7	REMOVE 18" CMP		b		
								1																						4.2			REMOVE DI	4.39 Rt "G-3" 11+12.83	c		
			20																												2.7	REMOVE 18" CMP		d		
								1																						4.2			REMOVE DI	4.14 Rt "G-3" 10+89.80	e		
			57																												2.7	REMOVE 18" CMP		f		
								1																						4.2			REMOVE DI	5.51 Rt "G-3" 10+31.02	g		
1.49	1	326																												3.7			G2 INLET	40.90 Rt "G-3" 11+41.79	h		
																	7.4														S	8.4	24" AP		i		
																1.5	6.0																	18"x24"x24" TEE Conn		j		
																	33.4														P	17.5	24" AP		k		
5.00	5	1558	225					6						56.4	23.8	18.0	46.8			1		18.16				6.33								SHEET TOTAL				

DRAINAGE QUANTITIES

DQ-7

H:\PDATA\10105878\CADD\Strmwater\Div\Merged CADD Files\c0F031id007.dgn
trmartin 16-DEC-2009 07:35

CALCULATED-DESIGNED BY: SCOTT CARTWRIGHT
CHECKED BY: RICHARD LUCERA
CONSULTANT FUNCTIONAL SUPERVISOR: RICHARD LUCERA
REVISED BY
DATE REVISED

STATE OF CALIFORNIA - DEPARTMENT OF TRANSPORTATION
Caltrans

LAST REVISION 08-01-08
DATE PLOTTED => 16-DEC-2009
TIME PLOTTED => 07:35

BORDER LAST REVISED 4/11/2008
RELATIVE BORDER SCALE IS IN INCHES 0 1 2 3
USERNAME => trmartin
DGN FILE => c0F031id007.dgn
CU 12220
EA 0F0311

Dist	COUNTY	ROUTE	POST MILES TOTAL PROJECT	SHEET No.	TOTAL SHEETS
12	Ora	57	16.2/18.6	164	960

REGISTERED CIVIL ENGINEER — 7/15/09 DATE

RICHARD LUCERA No. 58089 Exp. 6/30/10 CIVIL — REGISTERED PROFESSIONAL ENGINEER — STATE OF CALIFORNIA

12-14-09
PLANS APPROVAL DATE

THE STATE OF CALIFORNIA OR ITS OFFICERS OR AGENTS SHALL NOT BE RESPONSIBLE FOR THE ACCURACY OR COMPLETENESS OF SCANNED COPIES OF THIS PLAN SHEET.

RBF CONSULTING
14275 ALTON PKWY
IRVINE, CA 92618

OCTA
550 S. MAIN STREET
ORANGE, CA 92863

DRAINAGE QUANTITIES

MINOR CONCRETE (MINOR STRUCTURE)	FRAME & GRATE (N)	Misc IRON & STEEL	REMOVE CULVERT	REMOVE FES	REMOVE OSD	REMOVE CONCRETE (CHANNEL)	REMOVE RSP	REMOVE INLET	ABANDON CULVERT	SAND BACKFILL	CAP INLET	ADJUST INLET	6" WELDED STEEL PIPE (.134" THICK)	8" WELDED STEEL PIPE (.134" THICK)	8" DIP	18" APC	24" APC	24" RCP	GLD	18" ALTERNATIVE FES	MINOR CONCRETE (BACKFILL)	ROCK SLOPE PROTECTION FABRIC	ROCK SLOPE PROTECTION (1 TON, METHOD B)	ROCK SLOPE PROTECTION (1/4 TON, METHOD B)	ROCK SLOPE PROTECTION (LIGHT, METHOD B)	ROCK SLOPE PROTECTION (FACING, METHOD B)	ROCK SLOPE PROTECTION (BACKING No. 2, METHOD B)	MINOR CONCRETE (DITCH LINING)	DITCH EXCAVATION	HEIGHT OF INLET (N)	"JOINT TYPE" (N)	MAXIMUM COVER (N)	DESCRIPTION	STATION	DRAINAGE UNIT	DRAINAGE SYSTEM No.	DRAINAGE PLAN SHEET No.
CY	EA	LB	LF	EA	EA	CY	CY	EA	LF	CY	EA	EA	LF	LF	LF	LF	LF	LF	LF	EA	CY	SQYD	CY	CY	CY	CY	CY	CY	CY	FT		FT				
1.04																																	Conc COLLAR	2.71 Rt "G-3" 11+40.97	I	30	D-5
			108																												2.8	REMOVE 18" CMP		a	31	D-5
								1																					4.3			REMOVE DI	73.26 Rt "B" 512+54.13	b		
			18																												2.8	REMOVE 18" CMP		c		
								1																					4.1			REMOVE DI	73.15 Rt "B" 512+74.10	d		
			82																												2.6	REMOVE 18" CMP		e		
								1																					4.1			REMOVE DI	76.03 Rt "B" 513+59.26	f		
																11.2																	18" AP RISER		a	32	D-5
2.24	2	580																											6.1			GD1 INLET*	33.50 Rt "G-3" 11+41.79	b		
																25.9														S	2.7	18" AP		c		
1.67	2	580																											4.1			GD1 INLET*	33.50 Rt "G-3" 11+12.60	d		
													56.5																			6" STEEL PIPE		e		
																	94.3														S	4.3	24" AP		a	33	D-5
1.81	2	580																											4.6			GD1 INLET*	33.50 Rt "G-3" 12+40.02	b		
																	43.7													S	3.4	24" AP		c		
1.90	1	326																											5.3			G2 INLET	91.60 Rt "B" 512+47.08	d		
																	32.0													S	3.3	24" AP		e		
																			29.5														GLD		f		
1.93	2	580																											5.0			GD1 INLET*	92.50 Rt "B" 512+82.99	g		
																	62.3													S	3.1	24" AP		h		
1.84	2	580																											4.7			GD1 INLET*	92.50 Rt "B" 513+50.00	i		
																	69.5													S	2.7	24" AP		j		
1.78	2	580																											4.5			GD1 INLET*	92.50 Rt "B" 514+24.38	k		
14.20	13	3806	207					3					56.5			37.1	301.8		29.50														SHEET TOTAL				

DRAINAGE QUANTITIES

DQ-8

STATE OF CALIFORNIA - DEPARTMENT OF TRANSPORTATION
Caltrans

CONSULTANT FUNCTIONAL SUPERVISOR: RICHARD LUCERA
CALCULATED-DESIGNED BY: SCOTT CARTWRIGHT
CHECKED BY: RICHARD LUCERA
REVISED BY
DATE REVISED

H:\PDATA\10105878\CADD\Strmwater\Div\Merged CADD Files\c0F031id008.dgn
trmartin 16-DEC-2009 07:35

LAST REVISION DATE PLOTTED => 16-DEC-2009
08-01-08 TIME PLOTTED => 07:35

BORDER LAST REVISED 4/11/2008 | RELATIVE BORDER SCALE IS IN INCHES 0 1 2 3 | USERNAME => trmartin | DGN FILE => c0F031id008.dgn | CU 12220 | EA 0F0311

Dist	COUNTY	ROUTE	POST MILES TOTAL PROJECT	SHEET No.	TOTAL SHEETS
12	Ora	57	16.2/18.6	165	960

REGISTERED CIVIL ENGINEER — DATE 7/15/09

RICHARD LUCERA No. 58089 Exp. 6/30/10 CIVIL — REGISTERED PROFESSIONAL ENGINEER — STATE OF CALIFORNIA

12-14-09
PLANS APPROVAL DATE

THE STATE OF CALIFORNIA OR ITS OFFICERS OR AGENTS SHALL NOT BE RESPONSIBLE FOR THE ACCURACY OR COMPLETENESS OF SCANNED COPIES OF THIS PLAN SHEET.

RBF CONSULTING
14275 ALTON PKWY
IRVINE, CA 92618

OCTA
550 S. MAIN STREET
ORANGE, CA 92863

DRAINAGE QUANTITIES

MINOR CONCRETE (MINOR STRUCTURE)	FRAME & GRATE (N)	Misc IRON & STEEL	REMOVE CULVERT	REMOVE FES	REMOVE OSD	REMOVE CONCRETE (CHANNEL)	REMOVE RSP	REMOVE INLET	ABANDON CULVERT	SAND BACKFILL	CAP INLET	ADJUST INLET	6" WELDED STEEL PIPE (.134" THICK)	8" WELDED STEEL PIPE (.134" THICK)	8" DIP	18" APC	24" APC	24" RCP	GLD	18" ALTERNATIVE FES	MINOR CONCRETE (BACKFILL)	ROCK SLOPE PROTECTION FABRIC	ROCK SLOPE PROTECTION (1 TON, METHOD B)	ROCK SLOPE PROTECTION (1/4 TON, METHOD B)	ROCK SLOPE PROTECTION (LIGHT, METHOD B)	ROCK SLOPE PROTECTION (FACING, METHOD B)	ROCK SLOPE PROTECTION (BACKING No. 2, METHOD B)	MINOR CONCRETE (DITCH LINING)	DITCH EXCAVATION	HEIGHT OF INLET (N)	"JOINT TYPE" (N)	MAXIMUM COVER (N)	DESCRIPTION	STATION	DRAINAGE UNIT	DRAINAGE SYSTEM No.	DRAINAGE PLAN SHEET No.
CY	EA	LB	LF	EA	EA	CY	CY	EA	LF	CY	EA	EA	LF	LF	LF	LF	LF	LF	LF	EA	CY	SQYD	CY	CY	CY	CY	CY	CY	CY	FT		FT					
			8																													2.2	REMOVE 18" CMP		a	34	D-5
								1																						3.7			REMOVE DI	29.74 Rt "G-3" 14+85.09	b		
			76																													2.9	REMOVE 18" CMP		c		
								1																						4.4			REMOVE DI	73.02 Rt "B" 514+98.97	d		
2.39	2	580																												6.6			GD1 INLET*	39.50 Rt "G-3" 14+84.95	e		
																			9.8															GLD		a	35	D-6
																12.9															P	5.9	18" AP		b		
1.28	1	326																												4.5			G3 INLET	38.00 Rt "G-3" 17+66.53	c		
																			68.9														GLD		d		
																73.4																	18" AP		e		
1.17	1	326																												4.0			G3 INLET	39.91 Rt "G-3" 16+88.68	f		
																			9.8															GLD		a	36	D-6
																12.7															P	5.9	18" AP		b		
1.28	1	326																												4.5			G3 INLET	38.00 Rt "G-3" 17+98.19	c		
								1																						7.4			REMOVE DI	35.94 Rt "G-3" 17+82.58	a	37	D-6
			104																													5.9	REMOVE 18" CMP		b		
1.92	1	326																												7.4			G3 INLET	38.00 Rt "G-3" 17+82.53	c		
																39.5															S	5.9	18" AP		d		
1.30	1	326																												4.6			G1 INLET	5.00 Lt "G-3" 17+77.67	e		
																39.1															P	4.7	18" AP		f		
3.05	1	326																												6.2			G2 INLET	98.00 Rt "B" 517+99.29	g		
																3.5															S	9.5	18" AP		h		
																4.5																		90° ELBOW		i		
																6.5																		18" AP RISER		j		
12.39	8	2536	188					3								192.1			88.50														SHEET TOTAL				

DRAINAGE QUANTITIES

DQ-9

H:\PDATA\10105878\CADD\Strmwater\Dlv\Merged CADD Files\c0F031id009.dgn
STATE OF CALIFORNIA - DEPARTMENT OF TRANSPORTATION
Caltrans
CALCULATED-DESIGNED BY: SCOTT CARTWRIGHT
CHECKED BY: RICHARD LUCERA
CONSULTANT FUNCTIONAL SUPERVISOR: RICHARD LUCERA
REVISED BY
DATE REVISED
trmartin 16-DEC-2009 07:36
LAST REVISION DATE PLOTTED => 16-DEC-2009
08-01-08 TIME PLOTTED => 07:36
BORDER LAST REVISED 4/11/2008
RELATIVE BORDER SCALE IS IN INCHES 0 1 2 3
USERNAME => trmartin
DGN FILE => c0F031id009.dgn
CU 12220
EA 0F0311

Dist	COUNTY	ROUTE	POST MILES TOTAL PROJECT	SHEET No.	TOTAL SHEETS
12	Ora	57	16.2/18.6	166	960

REGISTERED CIVIL ENGINEER — 7/15/09 DATE

RICHARD LUCERA No. 58089 Exp. 6/30/10 CIVIL — REGISTERED PROFESSIONAL ENGINEER — STATE OF CALIFORNIA

12-14-09
PLANS APPROVAL DATE

THE STATE OF CALIFORNIA OR ITS OFFICERS OR AGENTS SHALL NOT BE RESPONSIBLE FOR THE ACCURACY OR COMPLETENESS OF SCANNED COPIES OF THIS PLAN SHEET.

RBF CONSULTING
14275 ALTON PKWY
IRVINE, CA 92618

OCTA
550 S. MAIN STREET
ORANGE, CA 92863

DRAINAGE QUANTITIES

MINOR CONCRETE (MINOR STRUCTURE)	FRAME & GRATE (N)	Misc IRON & STEEL	REMOVE CULVERT	REMOVE FES	REMOVE OSD	REMOVE CONCRETE (CHANNEL)	REMOVE RSP	REMOVE INLET	ABANDON CULVERT	SAND BACKFILL	CAP INLET	ADJUST INLET	6" WELDED STEEL PIPE (.134" THICK)	8" WELDED STEEL PIPE (.134" THICK)	8" DIP	18" APC	24" APC	24" RCP	GLD	18" ALTERNATIVE FES	MINOR CONCRETE (BACKFILL)	ROCK SLOPE PROTECTION FABRIC	ROCK SLOPE PROTECTION (1 TON, METHOD B)	ROCK SLOPE PROTECTION (1/4 TON, METHOD B)	ROCK SLOPE PROTECTION (LIGHT, METHOD B)	ROCK SLOPE PROTECTION (FACING, METHOD B)	ROCK SLOPE PROTECTION (BACKING No. 2, METHOD B)	MINOR CONCRETE (DITCH LINING)	DITCH EXCAVATION	HEIGHT OF INLET (N)	"JOINT TYPE" (N)	MAXIMUM COVER (N)	DESCRIPTION	STATION	DRAINAGE UNIT	DRAINAGE SYSTEM No.	DRAINAGE PLAN SHEET No.
CY	EA	LB	LF	EA	EA	CY	CY	EA	LF	CY	EA	EA	LF	LF	LF	LF	LF	LF	LF	EA	CY	SQYD	CY	CY	CY	CY	CY	CY	CY	FT		FT					
2.45	2	580																												4.7			GD1 INLET*	92.48 R† "B" 517+99.28	k	37	D-6
																17.5															S	3.3	18" AP		l		
											1																							CAP INLET	98.79 R† "B" 517+96.71	m		
																1.5	6.0																	18"x24"x24" TEE Conn		a	38	D-6
																5.1																	18" AP RISER		b		
2.85	2	580																												5.7			GD1 INLET*	98.36 R† "B" 521+99.50	c		
																	41.9														S	3.6	24" AP		d		
1.95	2	580																												5.1			GD1 INLET*	95.50 R† "B" 521+54.76	e		
																42.4															S	3.2	18" AP		f		
1.70	2	580																												4.2			GD1 INLET*	92.58 R† "B" 521+09.60	g		
											1																							CAP INLET	78.65 R† "B" 521+99.56	a	39	D-6
																																		DELETED			40	
																1.5	6.0																	18"x24"x24" TEE Conn		a	41	D-6
																10.1																	18" AP RISER		b		
2.65	2	580																												7.5			GD1 INLET*	19.50 R† "H-1" 25+85.85	c		
																	92.4														S	5.7	24" AP		d		
1.81	2	580																												4.6			GD1 INLET*	19.50 R† "H-1" 26+81.03	e		
			18																													2.5	REMOVE 18" CMP		a	42	D-6
								1																						4.0			REMOVE DI	71.97 R† "B" 525+98.80	b		
			48																													2.5	REMOVE 18" CMP		c		
								1																						4.0			REMOVE DI	71.45 R† "B" 526+48.96	d		
											1																							CAP INLET	71.44 R† "B" 525+80.86	e		
13.41	12	3480	66					2			3					78.1	146.3																	SHEET TOTAL				

DRAINAGE QUANTITIES

DQ-10

Dist	COUNTY	ROUTE	POST MILES TOTAL PROJECT	SHEET No.	TOTAL SHEETS
12	Ora	57	16.2/18.6	167	960

REGISTERED CIVIL ENGINEER — 7/15/09 DATE

RICHARD LUCERA No. 58089 Exp. 6/30/10 CIVIL — REGISTERED PROFESSIONAL ENGINEER — STATE OF CALIFORNIA

12-14-09
PLANS APPROVAL DATE

THE STATE OF CALIFORNIA OR ITS OFFICERS OR AGENTS SHALL NOT BE RESPONSIBLE FOR THE ACCURACY OR COMPLETENESS OF SCANNED COPIES OF THIS PLAN SHEET.

RBF CONSULTING
14275 ALTON PKWY
IRVINE, CA 92618

OCTA
550 S. MAIN STREET
ORANGE, CA 92863

DRAINAGE QUANTITIES

MINOR CONCRETE (MINOR STRUCTURE)	(N) FRAME & GRATE	Misc IRON & STEEL	REMOVE CULVERT	REMOVE FES	REMOVE OSD	REMOVE CONCRETE (CHANNEL)	REMOVE RSP	REMOVE INLET	ABANDON CULVERT	SAND BACKFILL	CAP INLET	ADJUST INLET	6" WELDED STEEL PIPE (.134" THICK)	8" WELDED STEEL PIPE (.134" THICK)	8" DIP	18" APC	24" APC	24" RCP	GLD	18" ALTERNATIVE FES	MINOR CONCRETE (BACKFILL)	ROCK SLOPE PROTECTION FABRIC	ROCK SLOPE PROTECTION (1 TON, METHOD B)	ROCK SLOPE PROTECTION (1/4 TON, METHOD B)	ROCK SLOPE PROTECTION (LIGHT, METHOD B)	ROCK SLOPE PROTECTION (FACING, METHOD B)	ROCK SLOPE PROTECTION (BACKING No. 2, METHOD B)	MINOR CONCRETE (DITCH LINING)	DITCH EXCAVATION	(N) HEIGHT OF INLET	(N) "JOINT TYPE"	(N) MAXIMUM COVER	DESCRIPTION	STATION	DRAINAGE UNIT	DRAINAGE SYSTEM No.	DRAINAGE PLAN SHEET No.
CY	EA	LB	LF	EA	EA	CY	CY	EA	LF	CY	EA	EA	LF	LF	LF	LF	LF	LF	LF	EA	CY	SQYD	CY	CY	CY	CY	CY	CY	CY	FT		FT					
1.82	1	326																												5.0			G2 INLET	91.00 Rt "B" 525+80.25	f	42	D-6
																			19.7														GLD		g		
																	22.9														S	2.5	24"AP		h		
1.75	2	580																												4.4			GD1 INLET*	92.50 Rt "B" 526+05.99	i		
																	71.5														S	2.5	24" AP		j		
1.78	2	580																												4.5			GD1 INLET*	92.50 Rt "B" 526+80.00	k		
																																	DELETED			43	
								1																						4.1			REMOVE DI	13.41 Rt "H-1" 30+33.11	a	44	D-6
1.19	1	326																												4.1			G3 INLET	14.00 Rt "H-1" 30+33.11	b		
																			49.2														GLD		c		
																50.1															S	2.3	18" AP		d		
1.17	1	326																												4.0			G3 INLET	14.00 Rt "H-1" 29+79.90	e		
																			49.2														GLD		f		
																50.2															S	2.5	18" AP		g		
1.19	1	326																												4.1			G3 INLET	14.00 Rt "H-1" 29+26.50	h		
																			42.7														GLD		i		
																45.7																		18" AP		j		
1.21	1	326																												4.2			G3 INLET	15.57 Rt "H-1" 28+77.67	k		
			49																													3.3	REMOVE 18" CMP		a	45	D-7
								1																						3.6			REMOVE DI	71.81 Rt "B" 530+75.12	b		
																6.0																		18"x18"x18" TEE Conn		c		
																8.9																		18" AP RISER		d		
1.64	2	580																												4.0			GD1 INLET*	92.50 Rt "B" 530+24.10	e		
											1																						CAP INLET	71.83 Rt "B" 530+25.82	f		
11.75	11	3370	49					2			1					160.9	94.4		160.80														SHEET TOTAL				

DRAINAGE QUANTITIES

DQ-11

H:\PDATA\10105878\CADD\Strmwater\Div\Merged CADD Files\c0F031id011.dgn
trmnguye 16-DEC-2009 08:36
STATE OF CALIFORNIA - DEPARTMENT OF TRANSPORTATION
CONSULTANT FUNCTIONAL SUPERVISOR: RICHARD LUCERA
CHECKED BY: RICHARD LUCERA
CALCULATED-DESIGNED BY: SCOTT CARTWRIGHT
REVISED BY
DATE REVISED
LAST REVISION DATE PLOTTED => 16-DEC-2009
TIME PLOTTED => 08:36
08-01-08

Dist	COUNTY	ROUTE	POST MILES TOTAL PROJECT	SHEET No.	TOTAL SHEETS
12	Ora	57	16.2/18.6	168	960

REGISTERED CIVIL ENGINEER — 7/15/09 DATE

RICHARD LUCERA No. 58089 Exp. 6/30/10 CIVIL — REGISTERED PROFESSIONAL ENGINEER — STATE OF CALIFORNIA

12-14-09
PLANS APPROVAL DATE

THE STATE OF CALIFORNIA OR ITS OFFICERS OR AGENTS SHALL NOT BE RESPONSIBLE FOR THE ACCURACY OR COMPLETENESS OF SCANNED COPIES OF THIS PLAN SHEET.

RBF CONSULTING
14275 ALTON PKWY
IRVINE, CA 92618

OCTA
550 S. MAIN STREET
ORANGE, CA 92863

DRAINAGE QUANTITIES

MINOR CONCRETE (MINOR STRUCTURE)	(N) FRAME & GRATE	Misc IRON & STEEL	REMOVE CULVERT	REMOVE FES	REMOVE OSD	REMOVE CONCRETE (CHANNEL)	REMOVE RSP	REMOVE INLET	ABANDON CULVERT	SAND BACKFILL	CAP INLET	ADJUST INLET	6" WELDED STEEL PIPE (.134" THICK)	8" WELDED STEEL PIPE (.134" THICK)	8" DIP	18" APC	24" APC	24" RCP	GLD	18" ALTERNATIVE FES	MINOR CONCRETE (BACKFILL)	ROCK SLOPE PROTECTION FABRIC	ROCK SLOPE PROTECTION (1 TON, METHOD B)	ROCK SLOPE PROTECTION (1/4 TON, METHOD B)	ROCK SLOPE PROTECTION (LIGHT, METHOD B)	ROCK SLOPE PROTECTION (FACING, METHOD B)	ROCK SLOPE PROTECTION (BACKING No. 2, METHOD B)	MINOR CONCRETE (DITCH LINING)	DITCH EXCAVATION	(N) HEIGHT OF INLET	(N) "JOINT TYPE"	(N) MAXIMUM COVER	DESCRIPTION	STATION	DRAINAGE UNIT	DRAINAGE SYSTEM No.	DRAINAGE PLAN SHEET No.
CY	EA	LB	LF	EA	EA	CY	CY	EA	LF	CY	EA	EA	LF	LF	LF	LF	LF	LF	LF	EA	CY	SQYD	CY	CY	CY	CY	CY	CY	CY	FT		FT					
0.67																																	JS No. 3	72.83 R+ "H-8" 38+05.63	a	46	D-7
																		39.3												S	4.3	24" RCP		b		
2.13	2	580																											5.7			GD1 INLET*	33.50 R+ "H-8" 38+06.18	c		
																	33.8													S	3.9	24" AP		d		
1.28	1	326																											4.5			G3 INLET	7.00 L+ "H-8" 38+06.24	e		
2.65	2	580																											7.5			GD1 INLET*	98.75 R+ "B" 542+40.22	a	47	D-8
																	19.2													S	3.2	24" AP		b		
1.98	2	580																											5.2			GD1 INLET*	92.50 R+ "B" 542+20.00	c		
																	117.0													S	3.2	24" AP		d		
1.90	2	580																											4.9			GD1 INLET*		e		
															97.0															S	2.7	18" AP	92.50 R+ "B" 541+00.00	f		
1.69	2	580																											4.2			GD1 INLET*	92.50 R+ "B" 540+00.00	g		
			69					1																							3.0	REMOVE 18" RCP		a	48	D-8
																													4.1			REMOVE DI	75.22 R+ "B" 541+74.63	b		
			20																												4.3	REMOVE 18" RCP		c		
								1																					4.5			REMOVE DI	74.24 R+ "B" 541+51.04	d		
											1																						CAP INLET	74.18 R+ "B" 542+47.23	e		
															1.5		6.0																18"x24"x24" TEE Conn		a	49	D-8
															8.1																		18"AP RISER		b		
3.09	2	580																											6.3			GD1 INLET*	31.80 R+ "H-8" 42+24.85	c		
																	131.7													S	4.3	24" AP		d		
1.81	2	580																											4.6			GD1 INLET*	31.01 R+ "H-8" 43+60.00	e		
17.21	15	4386	89					2			1				107	307.7	39.3																SHEET TOTAL				

DRAINAGE QUANTITIES

DQ-12

STATE OF CALIFORNIA - DEPARTMENT OF TRANSPORTATION
CALTRANS
CALCULATED-DESIGNED BY: SCOTT CARTWRIGHT
CHECKED BY: RICHARD LUCERA
CONSULTANT FUNCTIONAL SUPERVISOR: RICHARD LUCERA
REVISED BY
DATE REVISED
H:\PDATA\10105878\CADD\Strmwater\Div\Merged CADD Files\c0F031id012.dgn
trmnguye 16-DEC-2009 08:36
LAST REVISION 08-01-08
DATE PLOTTED => 16-DEC-2009
TIME PLOTTED => 08:36

BORDER LAST REVISED 4/11/2008
RELATIVE BORDER SCALE IS IN INCHES 0 1 2 3
USERNAME => trmnguye
DGN FILE => c0F031id012.dgn
CU 12220
EA 0F0311

Dist	COUNTY	ROUTE	POST MILES TOTAL PROJECT	SHEET No.	TOTAL SHEETS
12	Ora	57	16.2/18.6	169	960

REGISTERED CIVIL ENGINEER — DATE 7/15/09

RICHARD LUCERA No. 58089 Exp. 6/30/10 CIVIL — REGISTERED PROFESSIONAL ENGINEER — STATE OF CALIFORNIA

12-14-09
PLANS APPROVAL DATE

THE STATE OF CALIFORNIA OR ITS OFFICERS OR AGENTS SHALL NOT BE RESPONSIBLE FOR THE ACCURACY OR COMPLETENESS OF SCANNED COPIES OF THIS PLAN SHEET.

RBF CONSULTING
14275 ALTON PKWY
IRVINE, CA 92618

OCTA
550 S. MAIN STREET
ORANGE, CA 92863

DRAINAGE QUANTITIES

MINOR CONCRETE (MINOR STRUCTURE)	(N) FRAME & GRATE	Misc IRON & STEEL	REMOVE CULVERT	REMOVE FES	REMOVE OSD	REMOVE CONCRETE (CHANNEL)	REMOVE RSP	REMOVE INLET	ABANDON CULVERT	SAND BACKFILL	CAP INLET	ADJUST INLET	6" WELDED STEEL PIPE (.134" THICK)	8" WELDED STEEL PIPE (.134" THICK)	8" DIP	18" APC	24" APC	24" RCP	GLD	18" ALTERNATIVE FES	MINOR CONCRETE (BACKFILL)	ROCK SLOPE PROTECTION FABRIC	ROCK SLOPE PROTECTION (1 TON, METHOD B)	ROCK SLOPE PROTECTION (1/4 TON, METHOD B)	ROCK SLOPE PROTECTION (LIGHT, METHOD B)	ROCK SLOPE PROTECTION (FACING, METHOD B)	ROCK SLOPE PROTECTION (BACKING No. 2, METHOD B)	MINOR CONCRETE (DITCH LINING)	DITCH EXCAVATION	(N) HEIGHT OF INLET	(N) "JOINT TYPE"	(N) MAXIMUM COVER	DESCRIPTION	STATION	DRAINAGE UNIT	DRAINAGE SYSTEM No.	DRAINAGE PLAN SHEET No.
CY	EA	LB	LF	EA	EA	CY	CY	EA	LF	CY	EA	EA	LF	LF	LF	LF	LF	LF	LF	EA	CY	SQYD	CY	CY	CY	CY	CY	CY	CY	FT		FT					
																16.9															S	2.6	18" AP		a	50	D-8
1.67	2	580																												4.1			GD1 INLET*	22.17 R+ "H-8" 44+90.00	b		
0.67																																	JS No. 3	55.08 R+ "H-8" 45+09.01	a	51	D-8
																		34.1												S	7.7	24" RCP		b		
2.01	2	580																												5.3			GD1 INLET*	21.50 R+ "H-8" 45+10.00	c		
																17.0														S	2.7	18" AP		d		
1.62	2	580																												4.0			GD1 INLET*	21.50 R+ "H-8" 45+30.00	e		
			249																													6.0	REMOVE 18" RCP		a	52	D-10
								1																						2.9			REMOVE DI	83.77 R+ "B" 562+48.72	b		
2.10	2	580																												5.6			GD1 INLET*	117.57 R+ "B" 564+96.91	c		
											1																						CAP INLET	108.88 R+ "B" 564+99.84	d		
			133																													6.7	REMOVE 24" RCP		a	53	D-11
								1																						5.5			REMOVE DI	65.90 R+ "I-4" 69+79.62	b		
			46																													4.0	REMOVE 18" RCP		c		
								1																						3.9			REMOVE DI	49.91 R+ "I-4" 70+54.77	d		
			23																													2.4	REMOVE 18" RCP		e		
								1																						3.7			REMOVE DI	40.04 R+ "I-4" 70+88.42	f		
			23																													2.2	REMOVE 18" RCP		g		
								1																						3.7			REMOVE DI	28.86 R+ "I-4" 71+18.39	h		
			46																													2.2	REMOVE 18" RCP		i		
								1																						3.7			REMOVE DI	9.70 R+ "I-4" 71+66.35	j		
																	128.5														S	8.2	24" AP		k		
1.64	2	580																												4.0			GD1 INLET*	44.92 R+ "I-4" 70+18.58	l		
9.72	10	2900	520					6			1					33.9	128.5	34																SHEET TOTAL				

DRAINAGE QUANTITIES

DQ-13

Dist	COUNTY	ROUTE	POST MILES TOTAL PROJECT	SHEET No.	TOTAL SHEETS
12	Ora	57	16.2/18.6	170	960

REGISTERED CIVIL ENGINEER — 7/15/09 DATE

RICHARD LUCERA No. 58089 Exp. 6/30/10 CIVIL — REGISTERED PROFESSIONAL ENGINEER — STATE OF CALIFORNIA

12-14-09
PLANS APPROVAL DATE

THE STATE OF CALIFORNIA OR ITS OFFICERS OR AGENTS SHALL NOT BE RESPONSIBLE FOR THE ACCURACY OR COMPLETENESS OF SCANNED COPIES OF THIS PLAN SHEET.

RBF CONSULTING
14275 ALTON PKWY
IRVINE, CA 92618

OCTA
550 S. MAIN STREET
ORANGE, CA 92863

DRAINAGE QUANTITIES

MINOR CONCRETE (MINOR STRUCTURE)	FRAME & GRATE (N)	Misc IRON & STEEL	REMOVE CULVERT	REMOVE FES	REMOVE OSD	REMOVE CONCRETE (CHANNEL)	REMOVE RSP	REMOVE INLET	ABANDON CULVERT	SAND BACKFILL	CAP INLET	ADJUST INLET	6" WELDED STEEL PIPE (.134" THICK)	8" WELDED STEEL PIPE (.134" THICK)	8" DIP	18" APC	24" APC	24" RCP	GLD	18" ALTERNATIVE FES	MINOR CONCRETE (BACKFILL)	ROCK SLOPE PROTECTION FABRIC	ROCK SLOPE PROTECTION (1 TON, METHOD B)	ROCK SLOPE PROTECTION (1/4 TON, METHOD B)	ROCK SLOPE PROTECTION (LIGHT, METHOD B)	ROCK SLOPE PROTECTION (FACING, METHOD B)	ROCK SLOPE PROTECTION (BACKING No. 2, METHOD B)	MINOR CONCRETE (DITCH LINING)	DITCH EXCAVATION	HEIGHT OF INLET (N)	"JOINT TYPE" (N)	MAXIMUM COVER (N)	DESCRIPTION	STATION	DRAINAGE UNIT	DRAINAGE SYSTEM No.	DRAINAGE PLAN SHEET No.
CY	EA	LB	LF	EA	EA	CY	CY	EA	LF	CY	EA	EA	LF	LF	LF	LF	LF	LF	LF	EA	CY	SQYD	CY	CY	CY	CY	CY	CY	CY	FT		FT				
						14.81																										REMOVE DITCH	41.91 R+ "I-3" 77+00.65 TO	a	54	D-11
																																	38.68 R+ "I-3" 85+63.92			
																												62.59	125				Conc DITCH	41.91 R+ "I-3" 77+00.65 TO	b		
																																	38.68 R+ "I-3" 85+63.92			
																												1.97	4				Conc DITCH	38.80 R+ "I-3" 85+73.30 TO	c		
																																	39.00 R+ "I-3" 86+00.00			
			40																													3.1	REMOVE 18" RCP		a	55	D-12
								1																					4.6			REMOVE DI	1.28 R+ "I-3" 79+21.14	b		
																	9.7													S	3.6	24" AP		a	56	D-12
1.67	2	580																												4.1			GD1 INLET*	19.50 R+ "I-3" 81+07.00	b		
																	23.0			4.76										S	3.2	24" AP		c		
1.61	2	580																												3.9			GD1 INLET*	19.50 R+ "I-3" 81+32.97	d		
																	30.0			6.21										S	3.2	24" AP		e		
1.58	2	580																												3.8			GD1 INLET*	19.50 R+ "I-3" 81+65.93	f		
																	130.8			27.08										S	2.7	24" AP		g		
1.64	2	580																												4.0			GD1 INLET*	19.50 R+ "I-3" 83+00.00	h		
2.22	2	580																												6.0			GD1 INLET*	19.50 R+ "I-3" 85+63.15	a	57	D-12
																													23				BIO-SWALE	53.00 R+ "I-4" 68+54.60 TO	a	58	D-11
																																	43.64 R+ "I-4" 70+15.54			
																													53				BIO-SWALE	39.17 R+ "I-4" 72+87.56 TO	a	59	D-11
																																	43.19 R+ "I-4" 70+21.13			
8.70	10	2900	40			14.8		1									193.5			38.05								64.56	206				SHEET TOTAL				

DRAINAGE QUANTITIES

DQ-14

STATE OF CALIFORNIA - DEPARTMENT OF TRANSPORTATION
Caltrans
CONSULTANT FUNCTIONAL SUPERVISOR: RICHARD LUCERA
CALCULATED-DESIGNED BY: SCOTT CARTWRIGHT
CHECKED BY: RICHARD LUCERA
REVISED BY
DATE REVISED

H:\PDATA\10105878\CADD\Strmwater\Div\Merged CADD Files\c0F031id014.dgn
trmnguye 16-DEC-2009 08:37

LAST REVISION 08-01-08
DATE PLOTTED => 16-DEC-2009
TIME PLOTTED => 08:37

BORDER LAST REVISED 4/11/2008
RELATIVE BORDER SCALE IS IN INCHES 0 1 2 3
USERNAME => trmnguye
DGN FILE => c0F031id014.dgn
CU 12220
EA 0F0311

Dist	COUNTY	ROUTE	POST MILES TOTAL PROJECT	SHEET No.	TOTAL SHEETS
12	Ora	57	16.2/18.6	171	960

REGISTERED CIVIL ENGINEER — DATE 7/15/09

RICHARD LUCERA No. 58089 Exp. 6/30/10 CIVIL — REGISTERED PROFESSIONAL ENGINEER — STATE OF CALIFORNIA

12-14-09
PLANS APPROVAL DATE

THE STATE OF CALIFORNIA OR ITS OFFICERS OR AGENTS SHALL NOT BE RESPONSIBLE FOR THE ACCURACY OR COMPLETENESS OF SCANNED COPIES OF THIS PLAN SHEET.

RBF CONSULTING
14275 ALTON PKWY
IRVINE, CA 92618

OCTA
550 S. MAIN STREET
ORANGE, CA 92863

DRAINAGE QUANTITIES

MINOR CONCRETE (MINOR STRUCTURE)	(N) FRAME & GRATE	Misc IRON & STEEL	REMOVE CULVERT	REMOVE FES	REMOVE OSD	REMOVE CONCRETE (CHANNEL)	REMOVE RSP	REMOVE INLET	ABANDON CULVERT	SAND BACKFILL	CAP INLET	ADJUST INLET	6" WELDED STEEL PIPE (.134" THICK)	8" WELDED STEEL PIPE (.134" THICK)	8" DIP	18" APC	24" APC	24" RCP	GLD	18" ALTERNATIVE FES	MINOR CONCRETE (BACKFILL)	ROCK SLOPE PROTECTION FABRIC	ROCK SLOPE PROTECTION (1 TON, METHOD B)	ROCK SLOPE PROTECTION (1/4 TON, METHOD B)	ROCK SLOPE PROTECTION (LIGHT, METHOD B)	ROCK SLOPE PROTECTION (FACING, METHOD B)	ROCK SLOPE PROTECTION (BACKING No. 2, METHOD B)	MINOR CONCRETE (DITCH LINING)	DITCH EXCAVATION	(N) HEIGHT OF INLET	(N) "JOINT TYPE"	(N) MAXIMUM COVER	DESCRIPTION	STATION	DRAINAGE UNIT	DRAINAGE SYSTEM No.	DRAINAGE PLAN SHEET No.
CY	EA	LB	LF	EA	EA	CY	CY	EA	LF	CY	EA	EA	LF	LF	LF	LF	LF	LF	LF	EA	CY	SQYD	CY	CY	CY	CY	CY	CY	CY	FT		FT					
																						25.88				10.13							RSP		a	60	D-11
																				1													18" FES	65.66 Rt "I-4" 64+30.64	b		
																22.0															S	3.2	18" AP		c		
1.64	2	580																												4.0			GD1 INLET*	24.00 Rt "I-4" 64+23.23	d		
																						30.78				13.67							RSP		a	61	D-11
																													32				BIO-SWALE	119.51 Rt "B" 577+47.78 TO	b		
																																		133.20 Rt "B" 576+00.57			
			30																														REMOVE 36" CMP	82.32 Rt "B" 495+16.56 TO	a	62	D-4
																																		112.20 Rt "B" 495+13.82			
																												58.52	117				Conc DITCH	129.51' "B" 549+38.07 TO	a	63	D-9
																																		122.00 Rt "B" 557+30.72			
			11																													8.1	REMOVE 18" CMP		a	64	D-11
1.04																																	Conc COLLAR	40.00 Rt "I-3" 75+83.69	b		
																11.3															S	8.1	18" AP		c		
1.04																																	Conc COLLAR	30.00 Rt "I-3" 75+89.40	d		
												1																					ADJUST INLET	26.91 Rt "I-5" 67+37.18	a	65	D-10
												1																					ADJUST INLET	27.71 Rt "I-5" 67+81.33	b		
3.72	2	580	41									2				33.3				1		56.66				23.80		58.52	149				SHEET TOTAL				
170.52	153	45774	1805	7	5	151.90	1.98	33	127	14.82	6	2	56.5	56.4	237.9	1742.1	1784.0	153.8	308.3	12	38.05	291.67	19.00	33.61	8.80	61.78	12.73	232.27	755				TOTAL				

DRAINAGE QUANTITIES

DQ-15

CALCULATED-DESIGNED BY: SCOTT CARTWRIGHT
CHECKED BY: RICHARD LUCERA
CONSULTANT FUNCTIONAL SUPERVISOR: RICHARD LUCERA
REVISED BY
DATE REVISED
STATE OF CALIFORNIA - DEPARTMENT OF TRANSPORTATION
Caltrans

H:\PDATA\10105878\CADD\Strmwater\Div\Merged CADD Files\c0F031id015.dgn trmnguye 16-DEC-2009 08:37

LAST REVISION 08-01-08 | DATE PLOTTED => 16-DEC-2009 | TIME PLOTTED => 08:37

BORDER LAST REVISED 4/11/2008 | RELATIVE BORDER SCALE IS IN INCHES 0 1 2 3 | USERNAME => trmnguye | DGN FILE => c0F031id015.dgn | CU 12220 | EA 0F0311

Dist	COUNTY	ROUTE	POST MILES TOTAL PROJECT	SHEET No.	TOTAL SHEETS
12	Ora	57	16.2/18.6	172	960

REGISTERED CIVIL ENGINEER — DATE 7/15/09

12-14-09
PLANS APPROVAL DATE

JOSUE J. VAGLIENTY No. 70783 Exp. 6-30-11 CIVIL — REGISTERED PROFESSIONAL ENGINEER — STATE OF CALIFORNIA

THE STATE OF CALIFORNIA OR ITS OFFICERS OR AGENTS SHALL NOT BE RESPONSIBLE FOR THE ACCURACY OR COMPLETENESS OF SCANNED COPIES OF THIS PLAN SHEET.

RBF CONSULTING
14275 ALTON PKWY
IRVINE, CA 92618

OCTA
550 S. MAIN STREET
ORANGE, CA 92863

NOTES:

1. FOR EDGE DRAIN QUANTITIES, SEE SUMMARY OF QUANTITIES SHEETS.
2. FOR EDGE DRAIN TYPE C (MOD) VENT DETAILS, SEE STRUCTURE PLANS.
3. FOR ACCURATE RIGHT OF WAY AND ACCESS DATA, CONTACT RIGHT OF WAY ENGINEERING AT THE DISTRICT OFFICE.

LEGEND:

——— EDGE DRAIN

"B"	LINE
+50	STATION
0	OUTLET (O), VENT (V) OR CLEANOUT (CL)
A	TYPE OF OUTLET, VENT OR CLEANOUT PER Std PLANS D99B OR D99C
50′	LENGTH OF OUTLET, VENT OR CLEANOUT FROM EDGE DRAIN

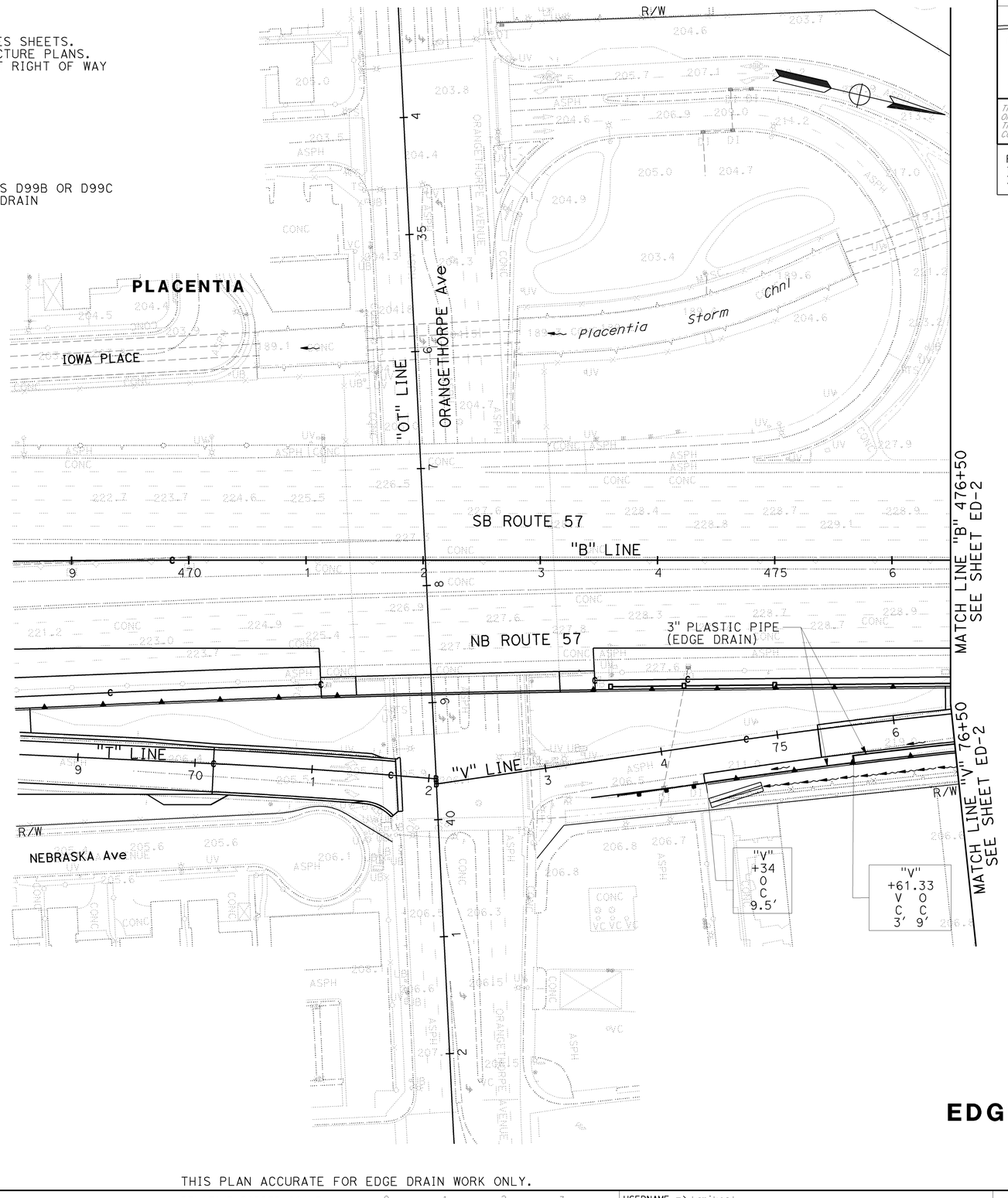

EDGE DRAIN PLAN

SCALE: 1" = 50′

ED-1

THIS PLAN ACCURATE FOR EDGE DRAIN WORK ONLY.

STATE OF CALIFORNIA - DEPARTMENT OF TRANSPORTATION
CONSULTANT FUNCTIONAL SUPERVISOR: GONZALO PENA
CALCULATED-DESIGNED BY: JOHN CURTIS
CHECKED BY: JOSUE VAGLIENTY
REVISED BY
DATE REVISED

H:\pdata\10105878\CADD\TransPW\Div\Drainage\MERGED 6-24-09\c0F0311e001.dgn trmikesl 23-DEC-2009 13:59

LAST REVISION DATE PLOTTED => 23-DEC-2009
TIME PLOTTED => 13:59

BORDER LAST REVISED 4/11/2008 | RELATIVE BORDER SCALE IS IN INCHES 0 1 2 3 | USERNAME => trmikesl | DGN FILE => c0F0311e001.dgn | CU 12220 | EA 0F0311

Dist	COUNTY	ROUTE	POST MILES TOTAL PROJECT	SHEET No.	TOTAL SHEETS
12	Ora	57	16.2/18.6	173	960

REGISTERED CIVIL ENGINEER — DATE 7/15/09

JOSUE J. VAGLIENTY No. 70783 Exp. 6-30-11 CIVIL — REGISTERED PROFESSIONAL ENGINEER — STATE OF CALIFORNIA

12-14-09
PLANS APPROVAL DATE

THE STATE OF CALIFORNIA OR ITS OFFICERS OR AGENTS SHALL NOT BE RESPONSIBLE FOR THE ACCURACY OR COMPLETENESS OF SCANNED COPIES OF THIS PLAN SHEET.

RBF CONSULTING
14275 ALTON PKWY
IRVINE, CA 92618

OCTA
550 S. MAIN STREET
ORANGE, CA 92863

NOTE: FOR ACCURATE RIGHT OF WAY DATA, CONTACT RIGHT OF WAY ENGINEERING AT THE DISTRICT OFFICE.

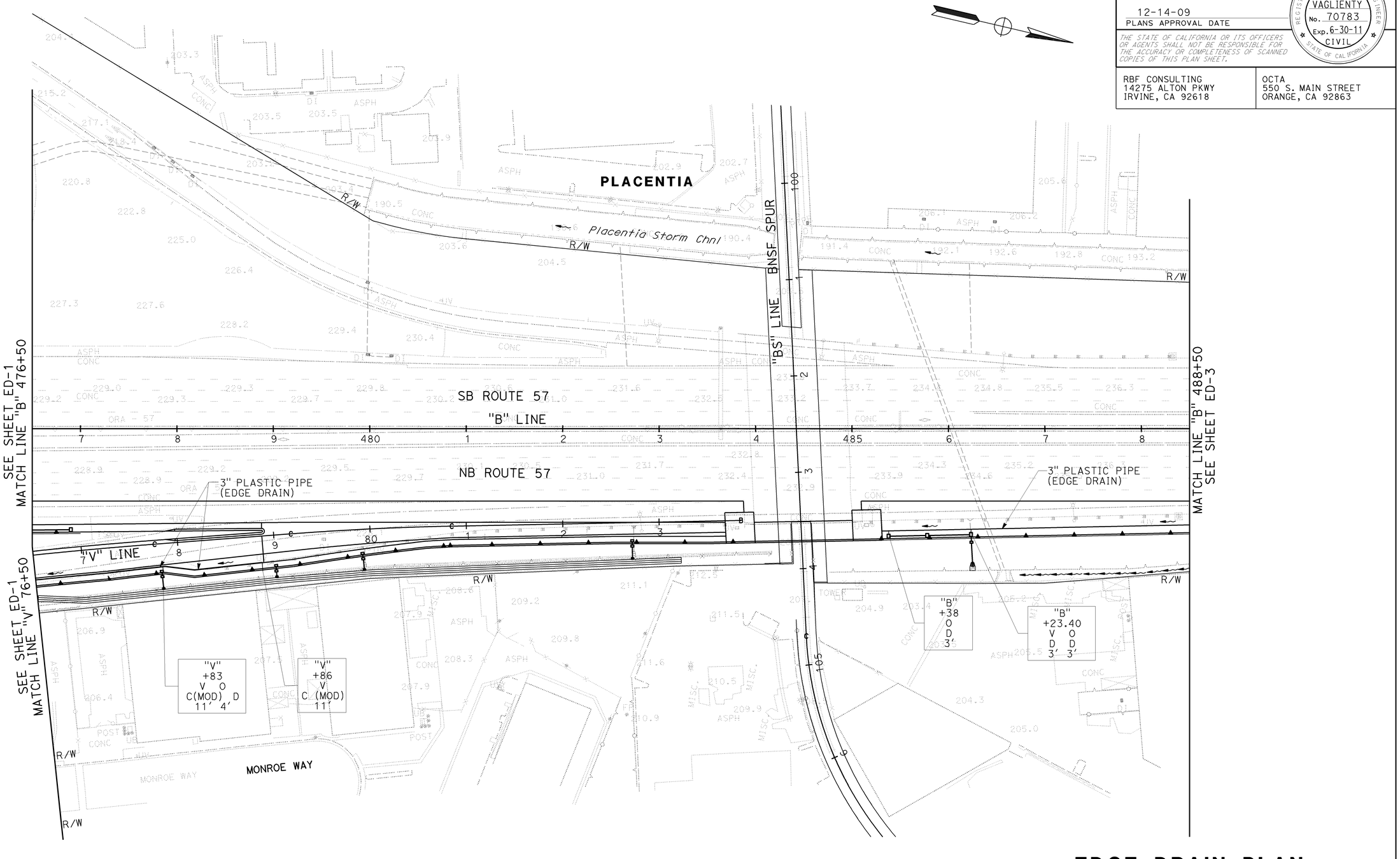

EDGE DRAIN PLAN

SCALE: 1" = 50'

ED-2

THIS PLAN ACCURATE FOR EDGE DRAIN WORK ONLY.

LAST REVISION DATE PLOTTED => 16-DEC-2009
08-01-08 TIME PLOTTED => 08:37

H:\pdata\10105878\CADD\TransPW\Div\Drainage\MERGED 6-24-09\c0F031ie002.dgn trmnguye 16-DEC-2009 08:37

STATE OF CALIFORNIA - DEPARTMENT OF TRANSPORTATION	CALCULATED-DESIGNED BY	CONSULTANT FUNCTIONAL SUPERVISOR	REVISED BY	DATE REVISED
Caltrans	JOHN CURTIS	GONZALO PENA		
	CHECKED BY			
	JOSUE VAGLIENTY			

BORDER LAST REVISED 4/11/2008 — RELATIVE BORDER SCALE IS IN INCHES 0 1 2 3 — USERNAME => trmnguye — DGN FILE => c0F031ie002.dgn — CU 12220 — EA 0F0311

NOTE: FOR ACCURATE RIGHT OF WAY DATA, CONTACT RIGHT OF WAY ENGINEERING AT THE DISTRICT OFFICE.

Dist	COUNTY	ROUTE	POST MILES TOTAL PROJECT	SHEET No.	TOTAL SHEETS
12	Ora	57	16.2/18.6	174	960

REGISTERED CIVIL ENGINEER — DATE 7/15/09

JOSUE J. VAGLIENTY No. 70783 Exp. 6-30-11 CIVIL — REGISTERED PROFESSIONAL ENGINEER — STATE OF CALIFORNIA

12-14-09
PLANS APPROVAL DATE

THE STATE OF CALIFORNIA OR ITS OFFICERS OR AGENTS SHALL NOT BE RESPONSIBLE FOR THE ACCURACY OR COMPLETENESS OF SCANNED COPIES OF THIS PLAN SHEET.

RBF CONSULTING
14275 ALTON PKWY
IRVINE, CA 92618

OCTA
550 S. MAIN STREET
ORANGE, CA 92863

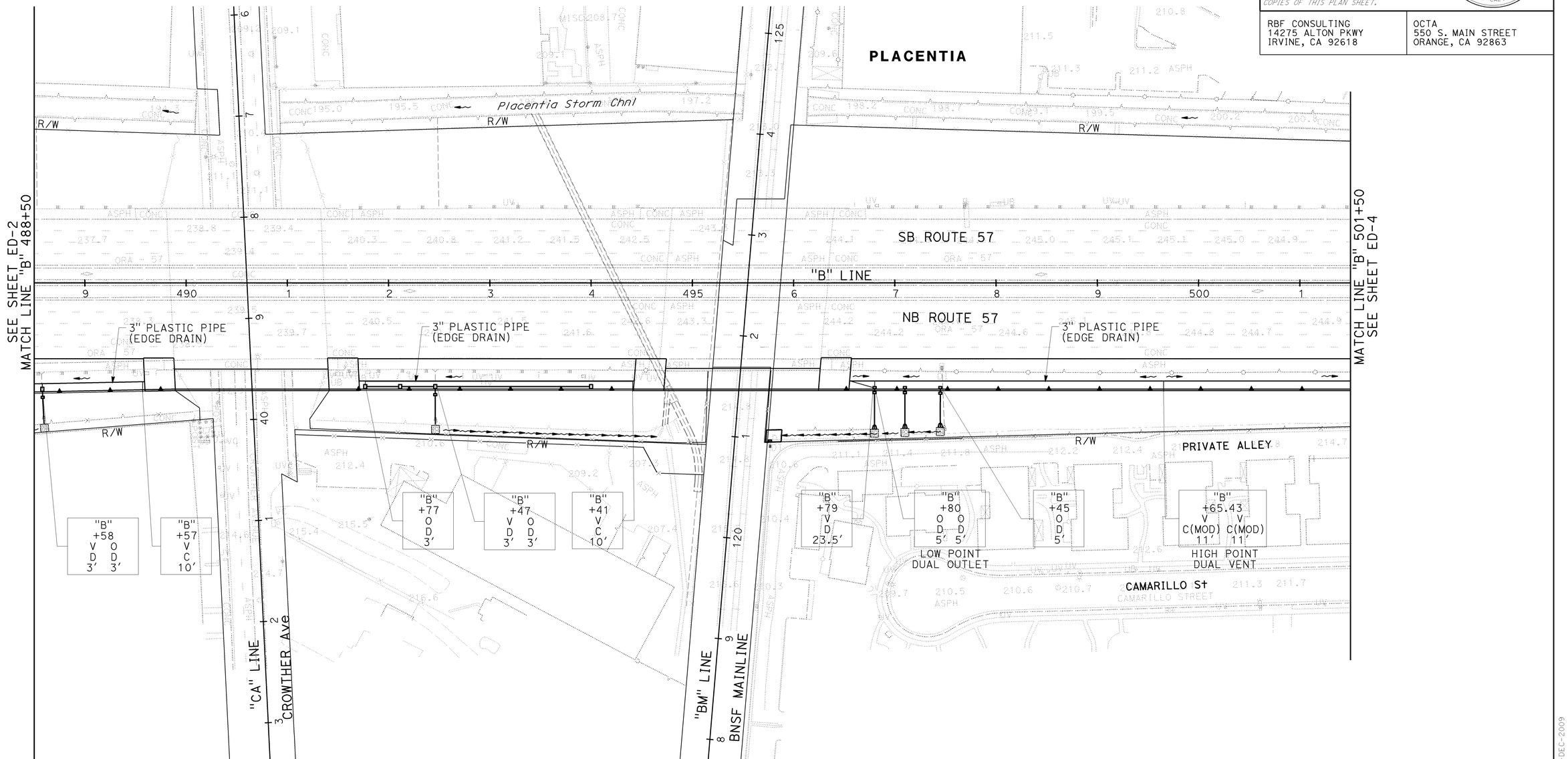

EDGE DRAIN PLAN

SCALE: 1" = 50'

ED-3

THIS PLAN ACCURATE FOR EDGE DRAIN WORK ONLY.

LAST REVISION | DATE PLOTTED => 16-DEC-2009 | TIME PLOTTED => 08:37 | 08-01-08

REVISED BY	DATE REVISED

CALCULATED-DESIGNED BY: JOHN CURTIS
CHECKED BY: JOSUE VAGLIENTY
CONSULTANT FUNCTIONAL SUPERVISOR: GONZALO PENA

STATE OF CALIFORNIA - DEPARTMENT OF TRANSPORTATION

Caltrans

H:\pdata\10105878\CADD\TransPW\Div\Drainage\MERGED 6-24-09\c0F031ie003.dgn 16-DEC-2009 08:37 trmnguye

BORDER LAST REVISED 4/11/2008

RELATIVE BORDER SCALE IS IN INCHES 0 1 2 3

USERNAME => trmnguye
DGN FILE => c0F031ie003.dgn

CU 12220

EA 0F0311

NOTE: FOR ACCURATE RIGHT OF WAY DATA, CONTACT RIGHT OF WAY ENGINEERING AT THE DISTRICT OFFICE.

Dist	COUNTY	ROUTE	POST MILES TOTAL PROJECT	SHEET No.	TOTAL SHEETS
12	Ora	57	16.2/18.6	175	960

REGISTERED CIVIL ENGINEER — DATE 7/15/09

JOSUE J. VAGLIENTY No. 70783 Exp. 6-30-11 CIVIL — REGISTERED PROFESSIONAL ENGINEER — STATE OF CALIFORNIA

12-14-09
PLANS APPROVAL DATE

THE STATE OF CALIFORNIA OR ITS OFFICERS OR AGENTS SHALL NOT BE RESPONSIBLE FOR THE ACCURACY OR COMPLETENESS OF SCANNED COPIES OF THIS PLAN SHEET.

RBF CONSULTING
14275 ALTON PKWY
IRVINE, CA 92618

OCTA
550 S. MAIN STREET
ORANGE, CA 92863

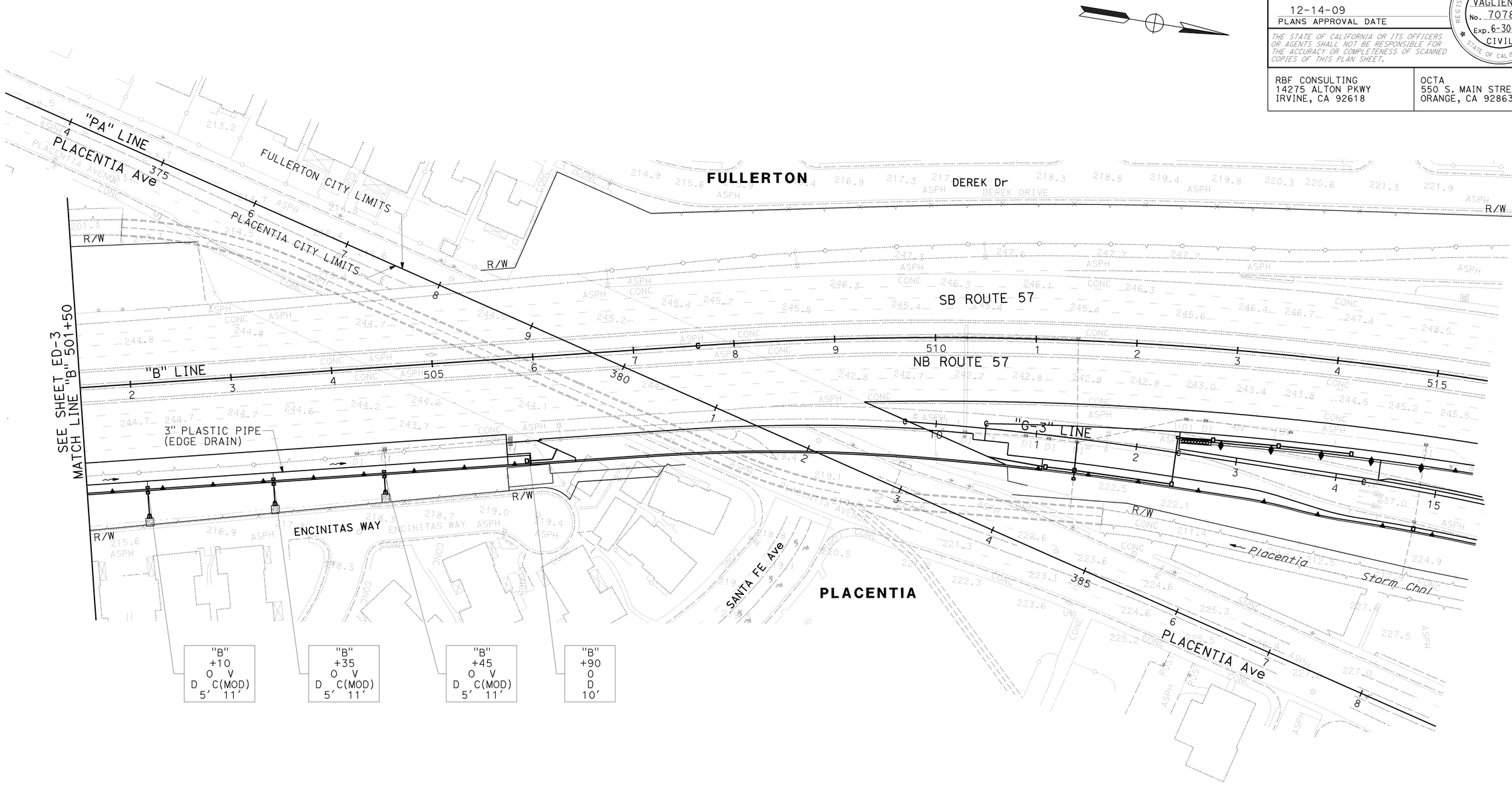

EDGE DRAIN PLAN

SCALE: 1" = 50'

ED-4

THIS PLAN ACCURATE FOR EDGE DRAIN WORK ONLY.

H:\pdata\10105878\CADD\TransPW\Div\Drainage\MERGED 6-24-09\c0F031ie004.dgn trmnguye 16-DEC-2009 08:37

REVISED BY	DATE REVISED

CALCULATED-DESIGNED BY: JOHN CURTIS
CHECKED BY: JOSUE VAGLIENTY
CONSULTANT FUNCTIONAL SUPERVISOR: GONZALO PENA
STATE OF CALIFORNIA - DEPARTMENT OF TRANSPORTATION
Caltrans

LAST REVISION | DATE PLOTTED => 16-DEC-2009 | TIME PLOTTED => 08:37
08-01-08

BORDER LAST REVISED 4/11/2008 | RELATIVE BORDER SCALE IS IN INCHES 0 1 2 3 | USERNAME => trmnguye | DGN FILE => c0F031ie004.dgn | CU 12220 | EA 0F0311

NOTE: FOR ACCURATE RIGHT OF WAY DATA, CONTACT RIGHT OF WAY ENGINEERING AT THE DISTRICT OFFICE.

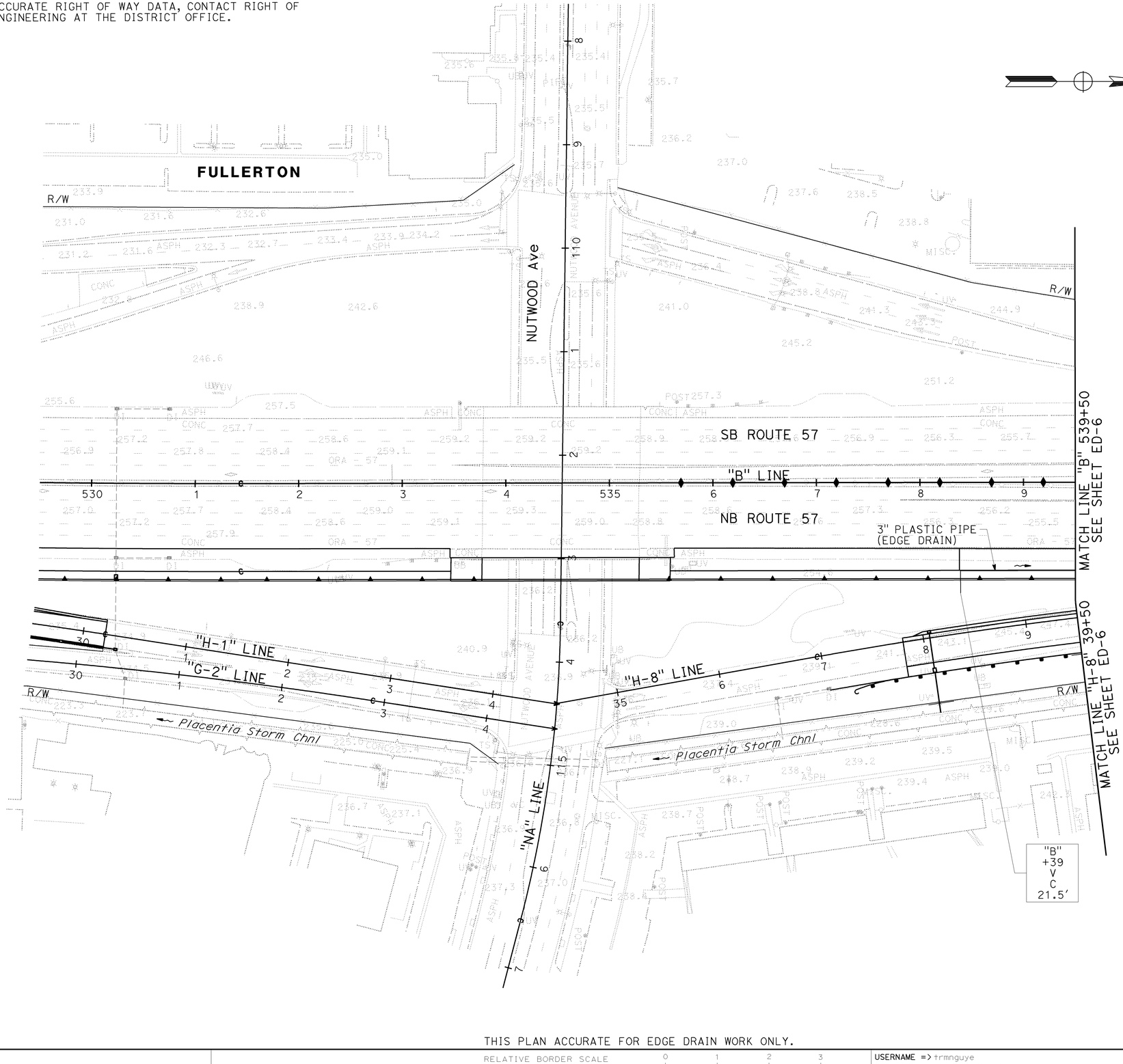

Dist	COUNTY	ROUTE	POST MILES TOTAL PROJECT	SHEET No.	TOTAL SHEETS
12	Ora	57	16.2/18.6	176	960

REGISTERED CIVIL ENGINEER — DATE 7/15/09

JOSUE J. VAGLIENTY No. 70783 Exp. 6-30-11 CIVIL — REGISTERED PROFESSIONAL ENGINEER — STATE OF CALIFORNIA

12-14-09
PLANS APPROVAL DATE

THE STATE OF CALIFORNIA OR ITS OFFICERS OR AGENTS SHALL NOT BE RESPONSIBLE FOR THE ACCURACY OR COMPLETENESS OF SCANNED COPIES OF THIS PLAN SHEET.

RBF CONSULTING
14275 ALTON PKWY
IRVINE, CA 92618

OCTA
550 S. MAIN STREET
ORANGE, CA 92863

EDGE DRAIN PLAN

SCALE: 1" = 50'

ED-5

THIS PLAN ACCURATE FOR EDGE DRAIN WORK ONLY.

REVISED BY	DATE REVISED

CALCULATED-DESIGNED BY: JOHN CURTIS
CHECKED BY: JOSUE VAGLIENTY
CONSULTANT FUNCTIONAL SUPERVISOR: GONZALO PENA
STATE OF CALIFORNIA - DEPARTMENT OF TRANSPORTATION

LAST REVISION: 08-01-08
DATE PLOTTED => 16-DEC-2009
TIME PLOTTED => 08:37

H:\pdata\10105878\CADD\TransPW\Div\Drainage\MERGED 6-24-09\c0F031ie005.dgn
16-DEC-2009 08:37
trmnguye

BORDER LAST REVISED 4/11/2008

RELATIVE BORDER SCALE IS IN INCHES 0 1 2 3

USERNAME => trmnguye
DGN FILE => c0F031ie005.dgn

CU 12220

EA 0F0311

NOTE: FOR ACCURATE RIGHT OF WAY DATA, CONTACT RIGHT OF WAY ENGINEERING AT THE DISTRICT OFFICE.

Dist	COUNTY	ROUTE	POST MILES TOTAL PROJECT	SHEET No.	TOTAL SHEETS
12	Ora	57	16.2/18.6	177	960

REGISTERED CIVIL ENGINEER — DATE 7/15/09

12-14-09
PLANS APPROVAL DATE

JOSUE J. VAGLIENTY No. 70783 Exp. 6-30-11 CIVIL — REGISTERED PROFESSIONAL ENGINEER — STATE OF CALIFORNIA

THE STATE OF CALIFORNIA OR ITS OFFICERS OR AGENTS SHALL NOT BE RESPONSIBLE FOR THE ACCURACY OR COMPLETENESS OF SCANNED COPIES OF THIS PLAN SHEET.

RBF CONSULTING
14275 ALTON PKWY
IRVINE, CA 92618

OCTA
550 S. MAIN STREET
ORANGE, CA 92863

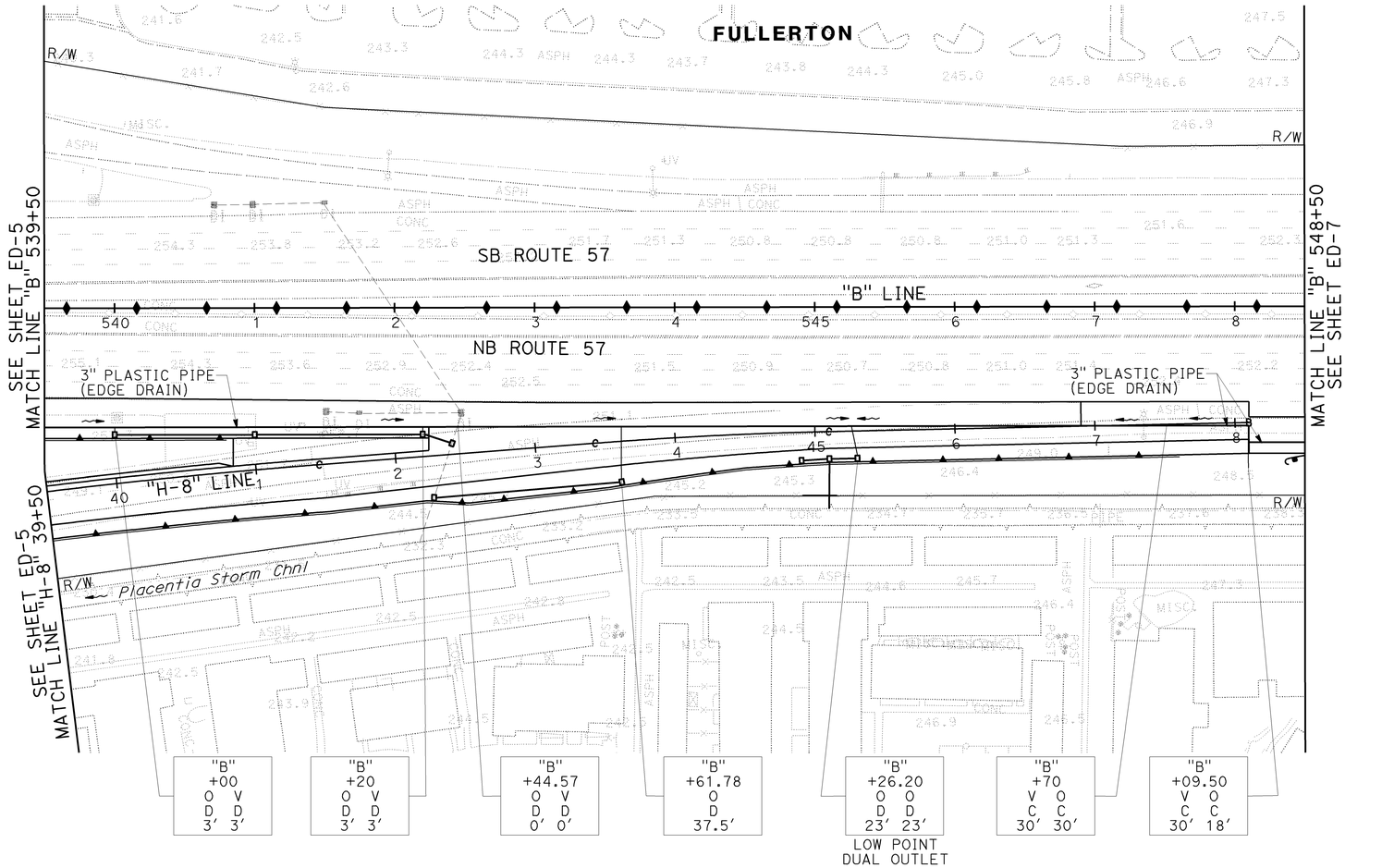

EDGE DRAIN PLAN

SCALE: 1" = 50'

ED-6

THIS PLAN ACCURATE FOR EDGE DRAIN WORK ONLY.

LAST REVISION | DATE PLOTTED => 16-DEC-2009
08-01-08 | TIME PLOTTED => 08:37

STATE OF CALIFORNIA - DEPARTMENT OF TRANSPORTATION — Caltrans

CONSULTANT FUNCTIONAL SUPERVISOR: GONZALO PENA
CALCULATED-DESIGNED BY: JOHN CURTIS
CHECKED BY: JOSUE VAGLIENTY
REVISED BY | DATE REVISED

H:\pdata\10105878\CADD\TransPW\Div\Drainage\MERGED 6-24-09\c0F0311ie006.dgn trmnguye 16-DEC-2009 08:37

BORDER LAST REVISED 4/11/2008

RELATIVE BORDER SCALE IS IN INCHES 0 1 2 3

USERNAME => trmnguye
DGN FILE => c0F0311ie006.dgn

CU 12220

EA 0F0311

NOTE: FOR ACCURATE RIGHT OF WAY DATA, CONTACT RIGHT OF WAY ENGINEERING AT THE DISTRICT OFFICE.

Dist	COUNTY	ROUTE	POST MILES TOTAL PROJECT	SHEET No.	TOTAL SHEETS
12	Ora	57	16.2/18.6	178	960

REGISTERED CIVIL ENGINEER — DATE 7/15/09

JOSUE J. VAGLIENTY No. 70783 Exp. 6-30-11 CIVIL — REGISTERED PROFESSIONAL ENGINEER — STATE OF CALIFORNIA

12-14-09
PLANS APPROVAL DATE

THE STATE OF CALIFORNIA OR ITS OFFICERS OR AGENTS SHALL NOT BE RESPONSIBLE FOR THE ACCURACY OR COMPLETENESS OF SCANNED COPIES OF THIS PLAN SHEET.

RBF CONSULTING
14275 ALTON PKWY
IRVINE, CA 92618

OCTA
550 S. MAIN STREET
ORANGE, CA 92863

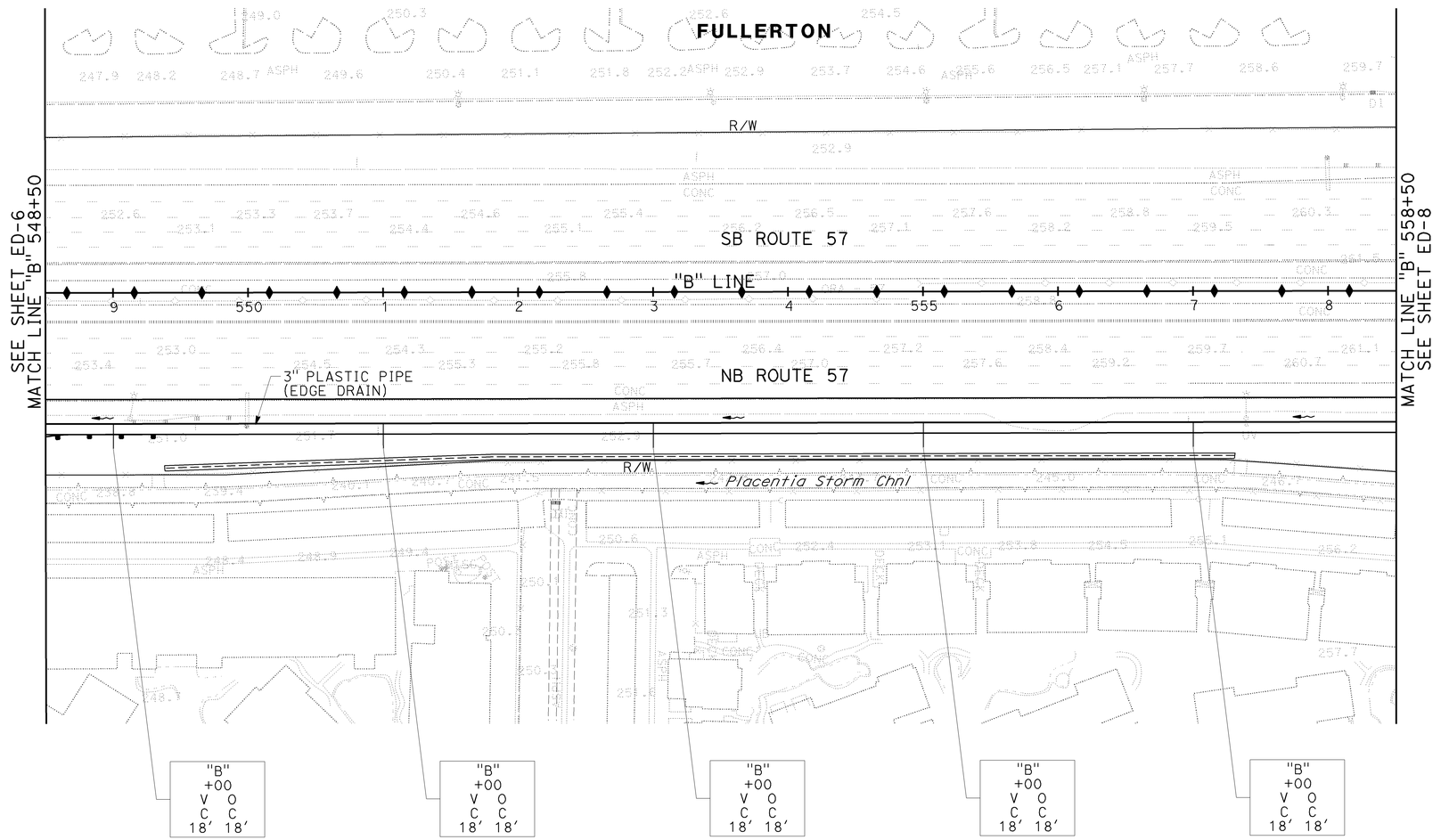

EDGE DRAIN PLAN

SCALE: 1" = 50′

ED-7

THIS PLAN ACCURATE FOR EDGE DRAIN WORK ONLY.

LAST REVISION 08-01-08 — DATE PLOTTED => 16-DEC-2009 — TIME PLOTTED => 08:37

REVISED BY | DATE REVISED

CALCULATED-DESIGNED BY: JOHN CURTIS
CHECKED BY: JOSUE VAGLIENTY

STATE OF CALIFORNIA - DEPARTMENT OF TRANSPORTATION
Caltrans

CONSULTANT FUNCTIONAL SUPERVISOR: GONZALO PENA

H:\pdata\10105878\CADD\TransPW\Div\Drainage\MERGED 6-24-09\c0F031ie007.dgn — trmnguye — 16-DEC-2009 08:37

BORDER LAST REVISED 4/11/2008

RELATIVE BORDER SCALE IS IN INCHES 0 1 2 3

USERNAME => trmnguye
DGN FILE => c0F031ie007.dgn

CU 12220

EA 0F0311

NOTE: FOR ACCURATE RIGHT OF WAY DATA, CONTACT RIGHT OF WAY ENGINEERING AT THE DISTRICT OFFICE.

Dist	COUNTY	ROUTE	POST MILES TOTAL PROJECT	SHEET No.	TOTAL SHEETS
12	Ora	57	16.2/18.6	179	960

REGISTERED CIVIL ENGINEER — DATE 7/15/09

JOSUE J. VAGLIENTY No. 70783 Exp. 6-30-11 CIVIL — REGISTERED PROFESSIONAL ENGINEER — STATE OF CALIFORNIA

12-14-09
PLANS APPROVAL DATE

THE STATE OF CALIFORNIA OR ITS OFFICERS OR AGENTS SHALL NOT BE RESPONSIBLE FOR THE ACCURACY OR COMPLETENESS OF SCANNED COPIES OF THIS PLAN SHEET.

RBF CONSULTING
14275 ALTON PKWY
IRVINE, CA 92618

OCTA
550 S. MAIN STREET
ORANGE, CA 92863

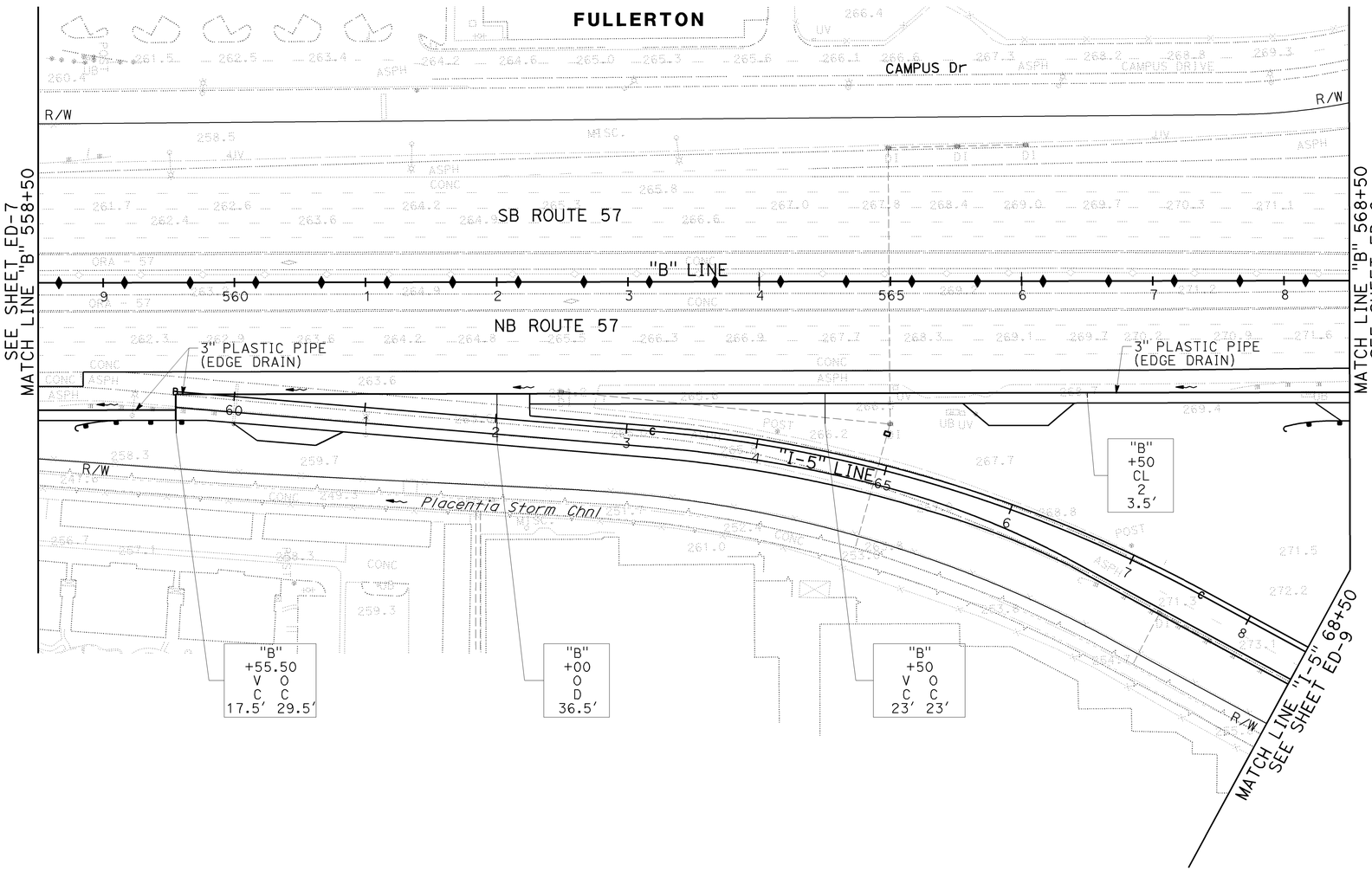

EDGE DRAIN PLAN

SCALE: 1" = 50'

ED-8

THIS PLAN ACCURATE FOR EDGE DRAIN WORK ONLY.

LAST REVISION 08-01-08 | DATE PLOTTED => 16-DEC-2009 | TIME PLOTTED => 08:38

STATE OF CALIFORNIA - DEPARTMENT OF TRANSPORTATION | CONSULTANT FUNCTIONAL SUPERVISOR: GONZALO PENA | CALCULATED-DESIGNED BY | CHECKED BY | REVISED BY | DATE REVISED

H:\pdata\10105878\CADD\TransPW\Div\Drainage\MERGED 6-24-09\c0F0311ie008.dgn trmnguye 16-DEC-2009 08:38

BORDER LAST REVISED 4/11/2008 | RELATIVE BORDER SCALE IS IN INCHES 0 1 2 3 | USERNAME => trmnguye | DGN FILE => c0F0311ie008.dgn | CU 12220 | EA 0F0311

NOTE: FOR ACCURATE RIGHT OF WAY DATA, CONTACT RIGHT OF WAY ENGINEERING AT THE DISTRICT OFFICE.

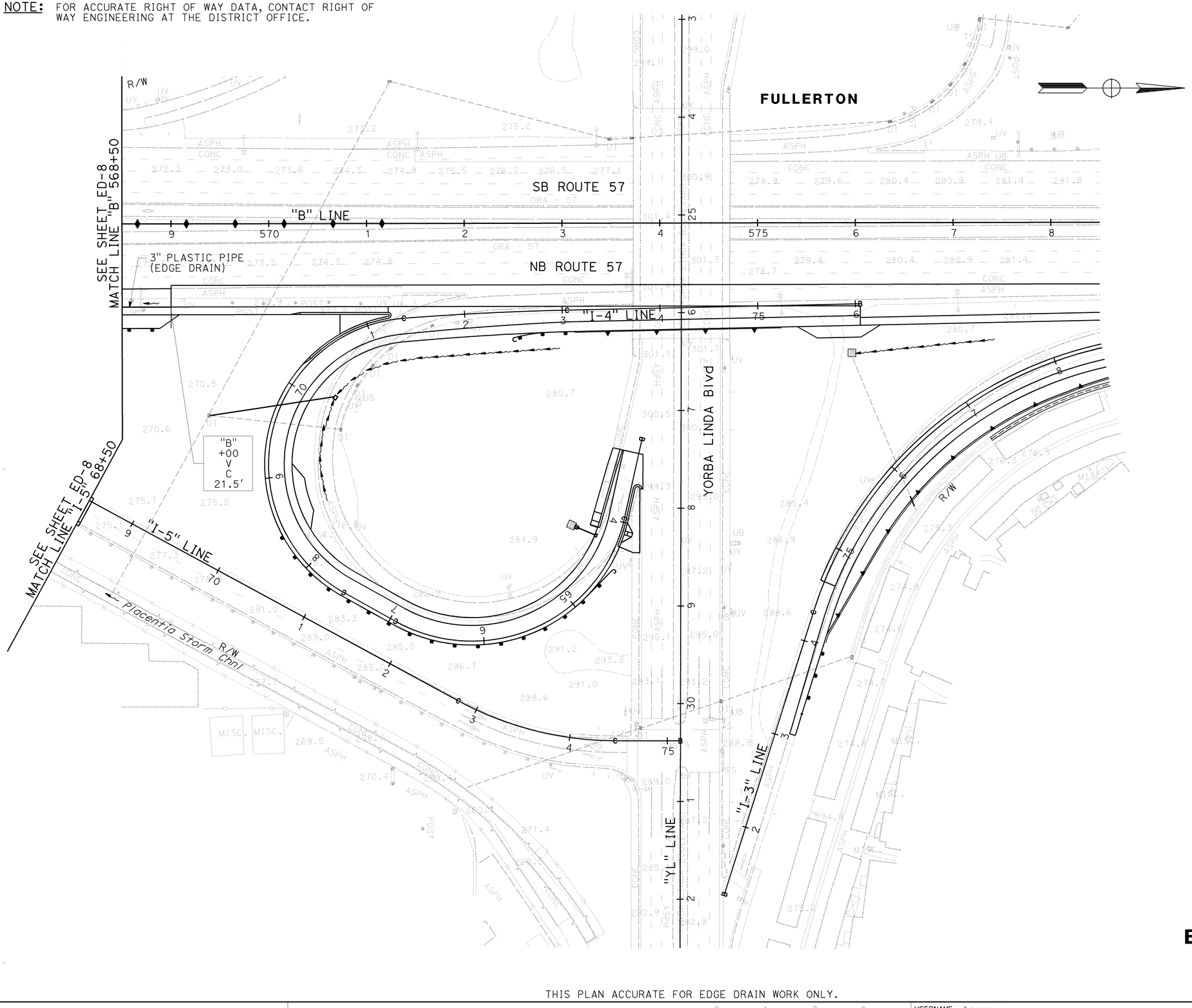

Dist	COUNTY	ROUTE	POST MILES TOTAL PROJECT	SHEET No.	TOTAL SHEETS
12	Ora	57	16.2/18.6	180	960

REGISTERED CIVIL ENGINEER — DATE 7/15/09

JOSUE J. VAGLIENTY No. 70783 Exp. 6-30-11 CIVIL — REGISTERED PROFESSIONAL ENGINEER — STATE OF CALIFORNIA

12-14-09
PLANS APPROVAL DATE

THE STATE OF CALIFORNIA OR ITS OFFICERS OR AGENTS SHALL NOT BE RESPONSIBLE FOR THE ACCURACY OR COMPLETENESS OF SCANNED COPIES OF THIS PLAN SHEET.

RBF CONSULTING
14275 ALTON PKWY
IRVINE, CA 92618

OCTA
550 S. MAIN STREET
ORANGE, CA 92863

EDGE DRAIN PLAN

SCALE: 1" = 50'

ED-9

THIS PLAN ACCURATE FOR EDGE DRAIN WORK ONLY.

STATE OF CALIFORNIA - DEPARTMENT OF TRANSPORTATION | CONSULTANT FUNCTIONAL SUPERVISOR: GONZALO PENA | DESIGNED BY: JOSUE VAGLIENTY | CALCULATED-DESIGNED BY | CHECKED BY | REVISED BY | DATE REVISED

H:\pdata\10105878\CADD\TransPW\Div\Drainage\MERGED 6-24-09\c0F0311ie009.dgn trmnguye 16-DEC-2009 08:38

LAST REVISION DATE PLOTTED => 16-DEC-2009
TIME PLOTTED => 08:38

BORDER LAST REVISED 4/11/2008 | RELATIVE BORDER SCALE IS IN INCHES 0 1 2 3 | USERNAME => trmnguye | DGN FILE => c0F0311ie009.dgn | CU 12220 | EA 0F0311

Dist	COUNTY	ROUTE	POST MILES TOTAL PROJECT	SHEET No.	TOTAL SHEETS
12	Ora	57	16.2/18.6	181	960

REGISTERED CIVIL ENGINEER 7/15/09 DATE

12-14-09
PLANS APPROVAL DATE

REGISTERED PROFESSIONAL ENGINEER JOSEPH W. SAWTELLE No. C60110 Exp. 6-30-10 CIVIL STATE OF CALIFORNIA

THE STATE OF CALIFORNIA OR ITS OFFICERS OR AGENTS SHALL NOT BE RESPONSIBLE FOR THE ACCURACY OR COMPLETENESS OF SCANNED COPIES OF THIS PLAN SHEET.

RMC INC.
6 HUTTON DR., SUITE 1250
SANTA ANA, CA 92707

OCTA
550 S. MAIN STREET
ORANGE, CA 92863

NOTES:

1. THE EXISTENCE AND LOCATION OF ANY UNDERGROUND UTILITY PIPES OR STRUCTURES SHOWN ON THESE PLANS HAVE BEEN OBTAINED BY A SEARCH OF THE AVAILABLE RECORDS.
2. FOR COMPLETE RIGHT OF WAY AND ACCURATE ACCESS DATA, SEE RIGHT OF WAY RECORD MAPS AT DISTRICT OFFICE.

ABBREVIATIONS:

CATV	CABLE TELEVISION
Cir	CIRCUIT
COMM	COMMUNICATIONS
Dist	DISTRIBUTION
DIP	DUCTILE IRON PIPE
FM	FORCE MAIN
HP	HIGH PRESSURE
[HR]	HIGH RISK
KV	KILO VOLT
PE	POLYETHYLENE PIPE
Trans	TRANSMISSION
UG	UNDERGROUND (Exist)

UTILITY OWNERSHIP ON THIS PROJECT:

AT&T	AMERICAN TELEPHONE AND TELEGRAPH (AT&T/SBC/PACBELL)
COMCAST	COMCAST CABLE
GSW	GOLDEN STATE WATER COMPANY
MCI	MCI WORLDCOM COMMUNICATIONS
MWD	METROPOLITAN WATER DISTRICT
OCEMA	ORANGE COUNTY ENVIRONMENTAL MANAGEMENT AGENCY/PUBLIC FACILITIES RESOURCES DEPARTMENT
OFCD	ORANGE COUNTY FLOOD CONTROL DISTRICT
OCTA	ORANGE COUNTY TRANSPORTATION AUTHORITY
OCSD	ORANGE COUNTY SANITATION DISTRICT
SCE	SOUTHERN CALIFORNIA EDISON
SCG	SOUTHERN CALIFORNIA GAS COMPANY
TWC	TIME WARNER CABLE
UNOCAL	UNION OIL COMPANY OF CALIFORNIA

LEGEND:

- UTILITY POTHOLE LOCATION
- POTHOLE NUMBER

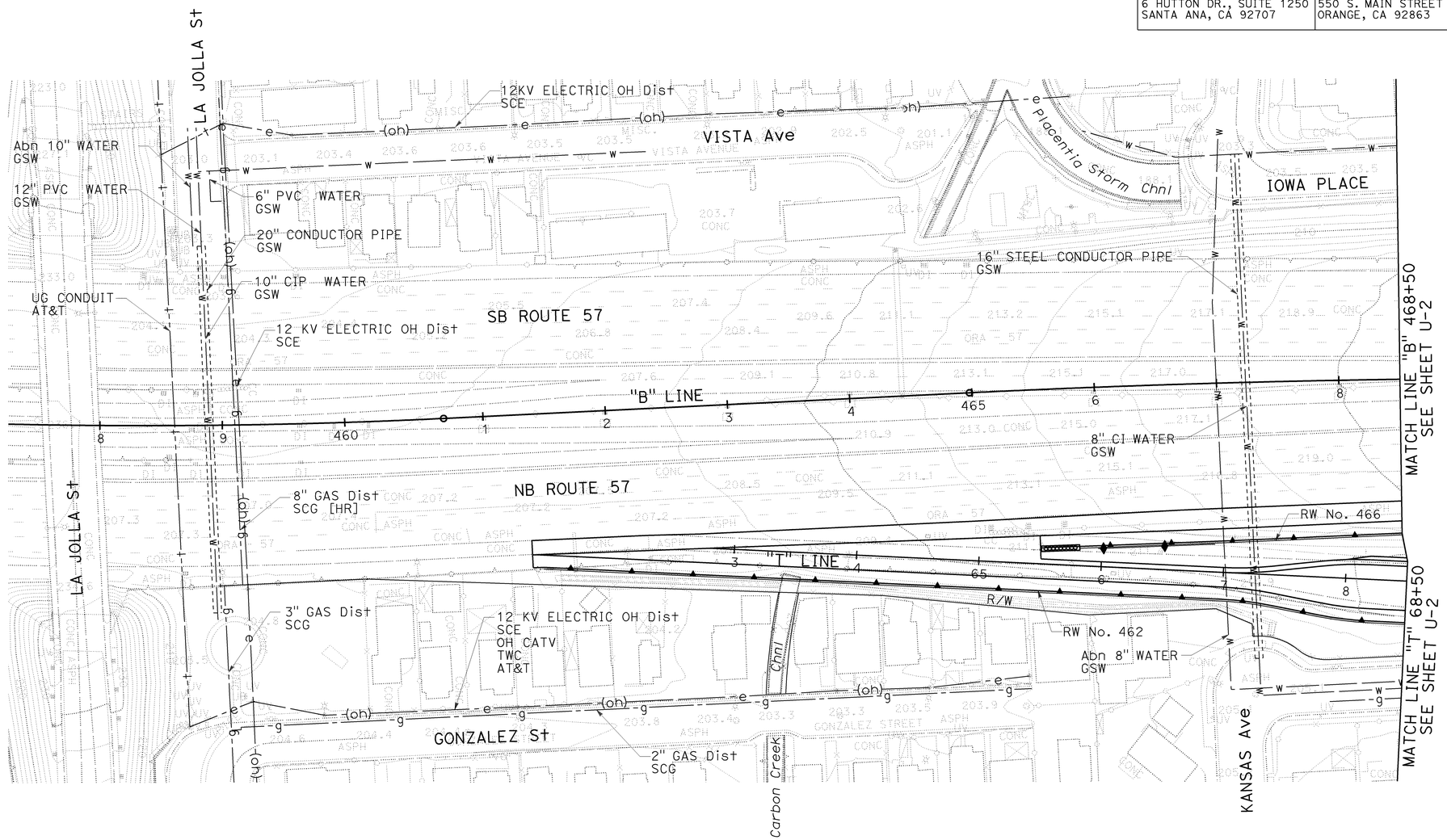

UTILITY PLAN

SCALE: 1" = 50'

THIS PLAN ACCURATE FOR UTILITIES ONLY.

U-1

STATE OF CALIFORNIA - DEPARTMENT OF TRANSPORTATION
Caltrans
DESIGN
CONSULTANT FUNCTIONAL SUPERVISOR: TONY RAHIMIAN
CALCULATED-DESIGNED BY: TRIET DANG
CHECKED BY: JOSEPH SAWTELLE
REVISED BY
DATE REVISED

H:\pdata\10105878\Admin\submittals\2009-06-29 FINAL Submittal\100% ELECTRONIC SUBMITTAL - MERGED FILES\2009\0F0311ka001.dgn

LAST REVISION 08-01-08
DATE PLOTTED => 16-DEC-2009
TIME PLOTTED => 09:04

BORDER LAST REVISED 4/11/2008
RELATIVE BORDER SCALE IS IN INCHES 0 1 2 3
USERNAME => trmartin
DGN FILE => c0F031ka001.dgn
CU 12220
EA 0F0311

Dist	COUNTY	ROUTE	POST MILES TOTAL PROJECT	SHEET No.	TOTAL SHEETS
12	Ora	57	16.2/18.6	182	960

REGISTERED CIVIL ENGINEER 7/15/09 DATE

12-14-09
PLANS APPROVAL DATE

REGISTERED PROFESSIONAL ENGINEER JOSEPH W. SAWTELLE No. C60110 Exp. 6-30-10 CIVIL STATE OF CALIFORNIA

THE STATE OF CALIFORNIA OR ITS OFFICERS OR AGENTS SHALL NOT BE RESPONSIBLE FOR THE ACCURACY OR COMPLETENESS OF SCANNED COPIES OF THIS PLAN SHEET.

RMC INC.
6 HUTTON DR., SUITE 1250
SANTA ANA, CA 92707

OCTA
550 S. MAIN STREET
ORANGE, CA 92863

NOTE:

1. FOR COMPLETE RIGHT OF WAY AND ACCURATE ACCESS DATA, SEE RIGHT OF WAY RECORD MAPS AT DISTRICT OFFICE.

POTHOLE LOCATION TABLE

No.	UTILITY	ALIGNMENT	STATION	OFFSET	NORTHING	EASTING	ELEVATION	DEPTH
02	36" HP GAS	"B" LINE	472+37.39	147.29' Rt	2260939.43	6067810.06	205.97'	4.42'
03	36" HP GAS	"B" LINE	472+45.66	119.03' Rt	2260941.04	6067780.66	205.76'	4.68'
13	8" HP GAS	"B" LINE	471+81.31	156.51' Rt	2260886.90	6067831.80	205.95'	4.32'

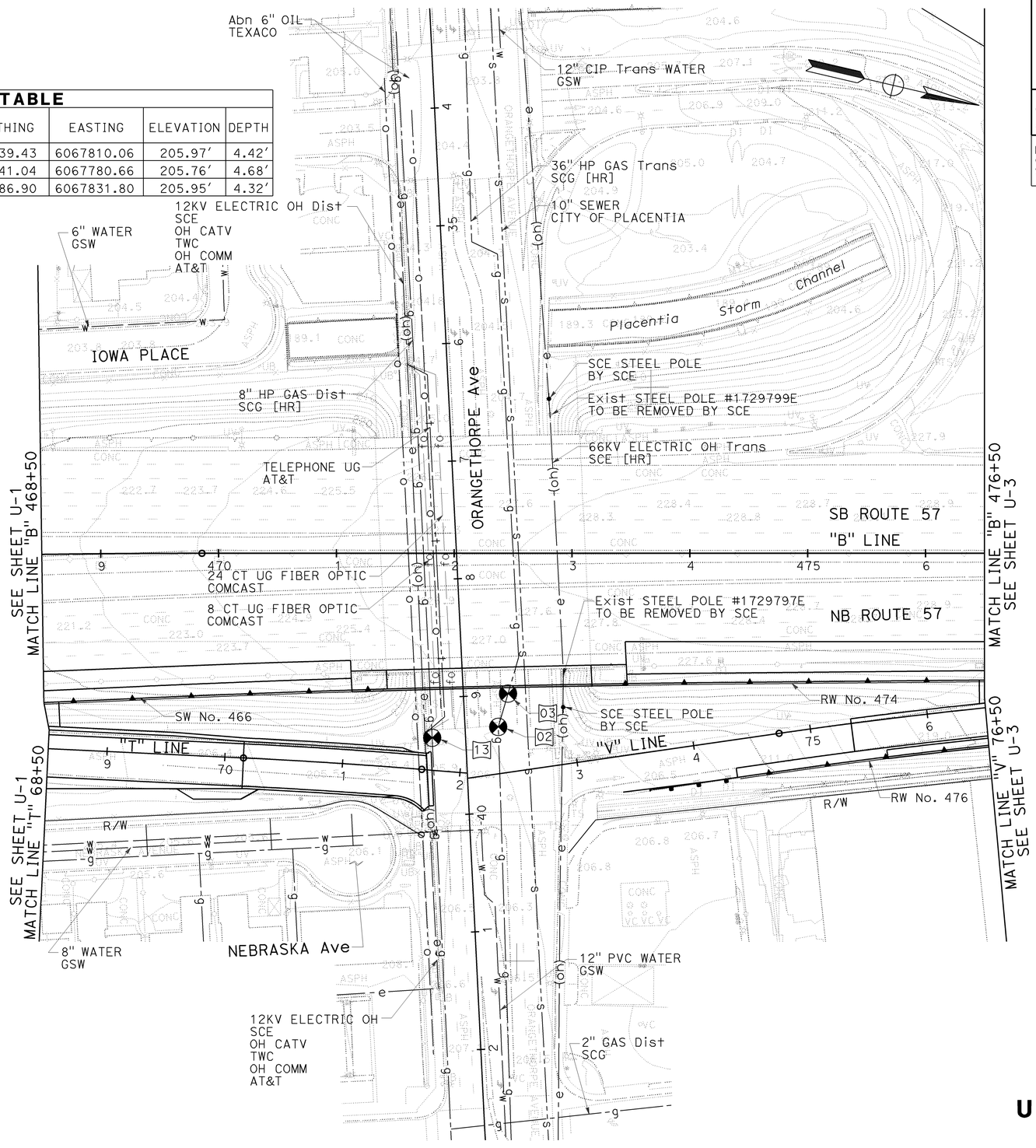

THIS PLAN ACCURATE FOR UTILITIES ONLY.

UTILITY PLAN

SCALE: 1" = 50'

U-2

STATE OF CALIFORNIA - DEPARTMENT OF TRANSPORTATION
Caltrans DESIGN
CONSULTANT FUNCTIONAL SUPERVISOR: TONY RAHIMIAN
CALCULATED-DESIGNED BY: TRIET DANG
CHECKED BY: JOSEPH SAWTELLE
REVISED BY
DATE REVISED

H:\pdata\10105878\Admin\submittals\2009-06-29 FINAL Submittal\100% ELECTRONIC SUBMITTAL - MERGED FILES\2009\08-01-08\0F031ka002.dgn

LAST REVISION 08-01-08
DATE PLOTTED => 16-DEC-2009
TIME PLOTTED => 08:49

BORDER LAST REVISED 4/11/2008
RELATIVE BORDER SCALE IS IN INCHES 0 1 2 3
USERNAME => trmartin
DGN FILE => c0F031ka002.dgn
CU 12220
EA 0F0311

Dist	COUNTY	ROUTE	POST MILES TOTAL PROJECT	SHEET No.	TOTAL SHEETS
12	Ora	57	16.2/18.6	183	960

REGISTERED CIVIL ENGINEER 12/3/09 DATE

12-14-09
PLANS APPROVAL DATE

REGISTERED PROFESSIONAL ENGINEER JOSEPH W. SAWTELLE No. C60110 Exp. 6-30-10 CIVIL STATE OF CALIFORNIA

THE STATE OF CALIFORNIA OR ITS OFFICERS OR AGENTS SHALL NOT BE RESPONSIBLE FOR THE ACCURACY OR COMPLETENESS OF SCANNED COPIES OF THIS PLAN SHEET.

RMC INC.
6 HUTTON DR., SUITE 1250
SANTA ANA, CA 92707

OCTA
550 S. MAIN STREET
ORANGE, CA 92863

NOTE:

1. FOR COMPLETE RIGHT OF WAY AND ACCURATE ACCESS DATA, SEE RIGHT OF WAY RECORD MAPS AT DISTRICT OFFICE.

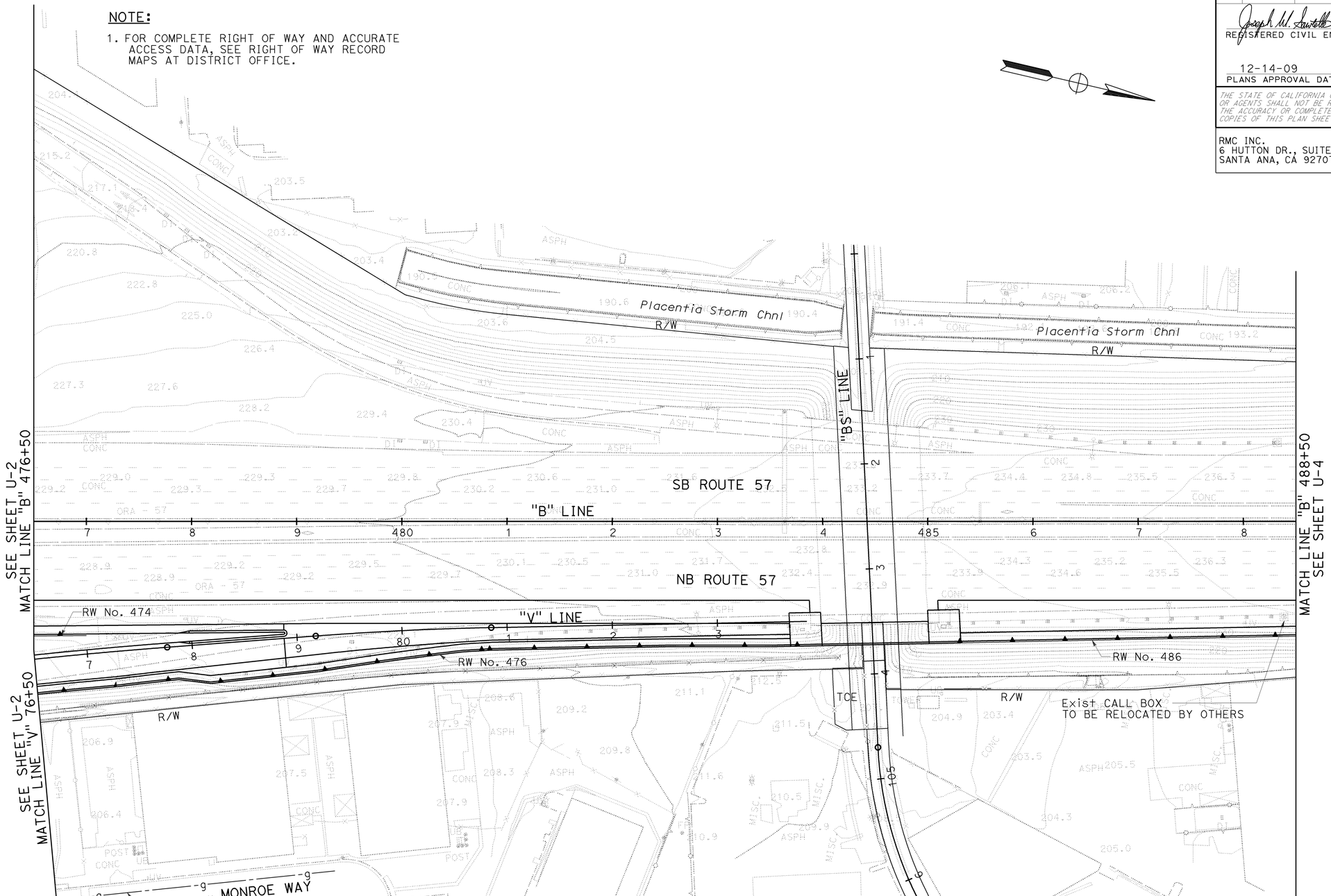

UTILITY PLAN

SCALE: 1" = 50'

THIS PLAN ACCURATE FOR UTILITIES ONLY

U-3

STATE OF CALIFORNIA - DEPARTMENT OF TRANSPORTATION
Caltrans
DESIGN

CONSULTANT FUNCTIONAL SUPERVISOR: TONY RAHIMIAN
CALCULATED-DESIGNED BY: TRIET DANG
CHECKED BY: JOSEPH SAWTELLE
REVISED BY: JJV
DATE REVISED: 12-3-09

H:\pdata\10105878\Admin\submittals\2009-06-29 FINAL Submittal\100% ELECTRONIC SUBMITTAL - MERGED FILES\2009\08-01-08\0F031ka003.dgn

LAST REVISION 08-01-08
DATE PLOTTED => 16-DEC-2009
TIME PLOTTED => 08:49

Dist	COUNTY	ROUTE	POST MILES TOTAL PROJECT	SHEET No.	TOTAL SHEETS
12	Ora	57	16.2/18.6	184	960

Joseph W. Sawtelle 12/3/09
REGISTERED CIVIL ENGINEER DATE

12-14-09
PLANS APPROVAL DATE

REGISTERED PROFESSIONAL ENGINEER JOSEPH W. SAWTELLE No. C60110 Exp. 6-30-10 CIVIL STATE OF CALIFORNIA

THE STATE OF CALIFORNIA OR ITS OFFICERS OR AGENTS SHALL NOT BE RESPONSIBLE FOR THE ACCURACY OR COMPLETENESS OF SCANNED COPIES OF THIS PLAN SHEET.

RMC INC.
6 HUTTON DR., SUITE 1250
SANTA ANA, CA 92707

OCTA
550 S. MAIN STREET
ORANGE, CA 92863

NOTE:

1. FOR COMPLETE RIGHT OF WAY AND ACCURATE ACCESS DATA, SEE RIGHT OF WAY RECORD MAPS AT DISTRICT OFFICE.

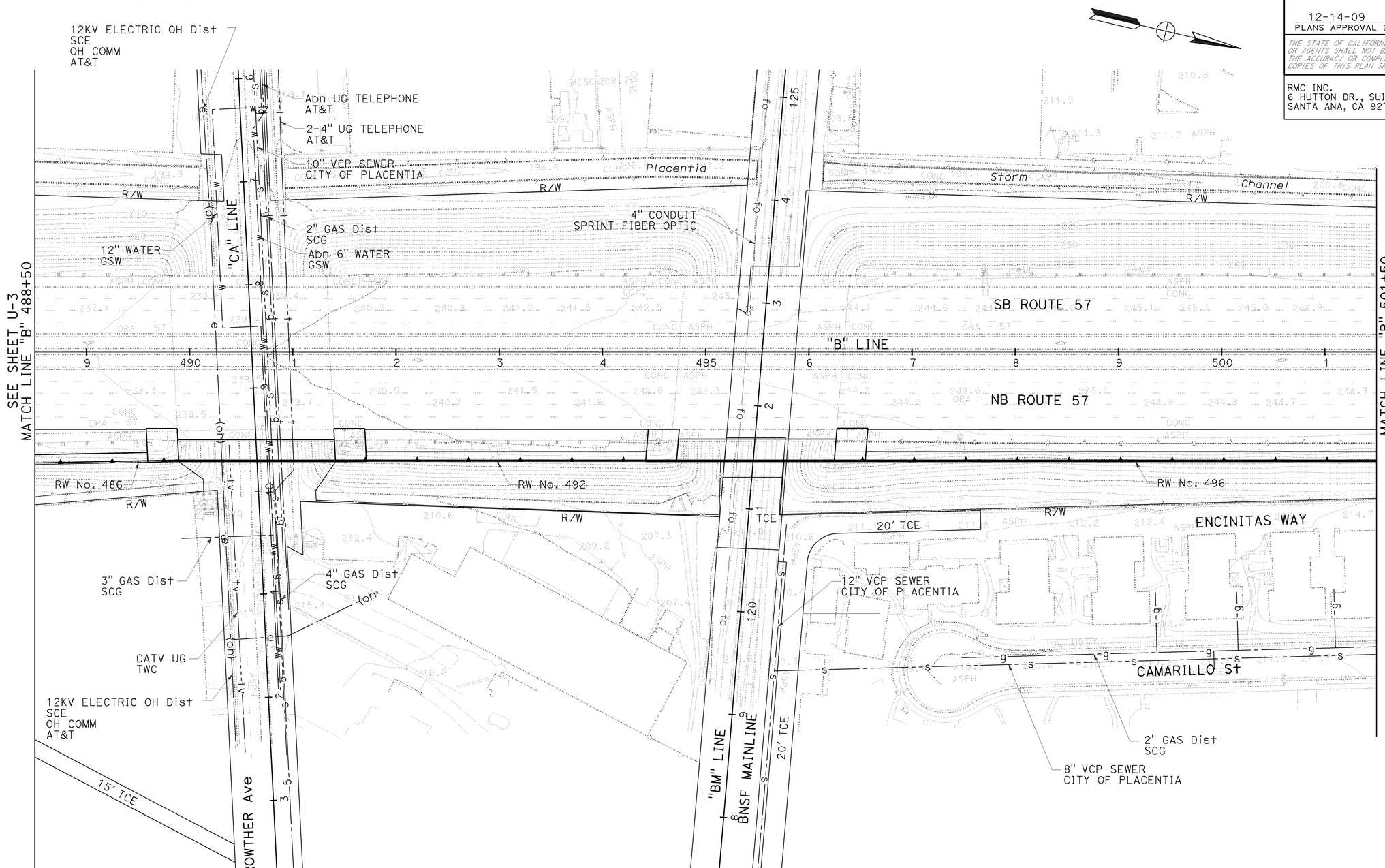

UTILITY PLAN

SCALE: 1" = 50'

THIS PLAN ACCURATE FOR UTILITIES ONLY.

U-4

STATE OF CALIFORNIA - DEPARTMENT OF TRANSPORTATION
Caltrans DESIGN

CONSULTANT FUNCTIONAL SUPERVISOR: TONY RAHIMIAN
CALCULATED-DESIGNED BY: TRIET DANG
CHECKED BY: JOSEPH SAWTELLE
REVISED BY: JJV
DATE REVISED: 12-3-09

H:\pdata\10105878\Admin\submittals\2009-06-29 FINAL Submittal\100% ELECTRONIC SUBMITTAL - MERGED FILES\2009\08-01-08\c0f031ka004.dgn

LAST REVISION 08-01-08
DATE PLOTTED => 16-DEC-2009
TIME PLOTTED => 08:50

BORDER LAST REVISED 4/11/2008
RELATIVE BORDER SCALE IS IN INCHES 0 1 2 3
USERNAME => trmartin
DGN FILE => c0F031ka004.dgn
CU 12220
EA 0F0311

Dist	COUNTY	ROUTE	POST MILES TOTAL PROJECT	SHEET No.	TOTAL SHEETS
12	Ora	57	16.2/18.6	185	960

Joseph W. Sawtelle 12/3/09
REGISTERED CIVIL ENGINEER DATE

12-14-09
PLANS APPROVAL DATE

JOSEPH W. SAWTELLE No. C60110 Exp. 6-30-10 CIVIL — REGISTERED PROFESSIONAL ENGINEER — STATE OF CALIFORNIA

THE STATE OF CALIFORNIA OR ITS OFFICERS OR AGENTS SHALL NOT BE RESPONSIBLE FOR THE ACCURACY OR COMPLETENESS OF SCANNED COPIES OF THIS PLAN SHEET.

RMC INC.
6 HUTTON DR., SUITE 1250
SANTA ANA, CA 92707

OCTA
550 S. MAIN STREET
ORANGE, CA 92863

NOTE:

1. FOR COMPLETE RIGHT OF WAY AND ACCURATE ACCESS DATA, SEE RIGHT OF WAY RECORD MAPS AT DISTRICT OFFICE.

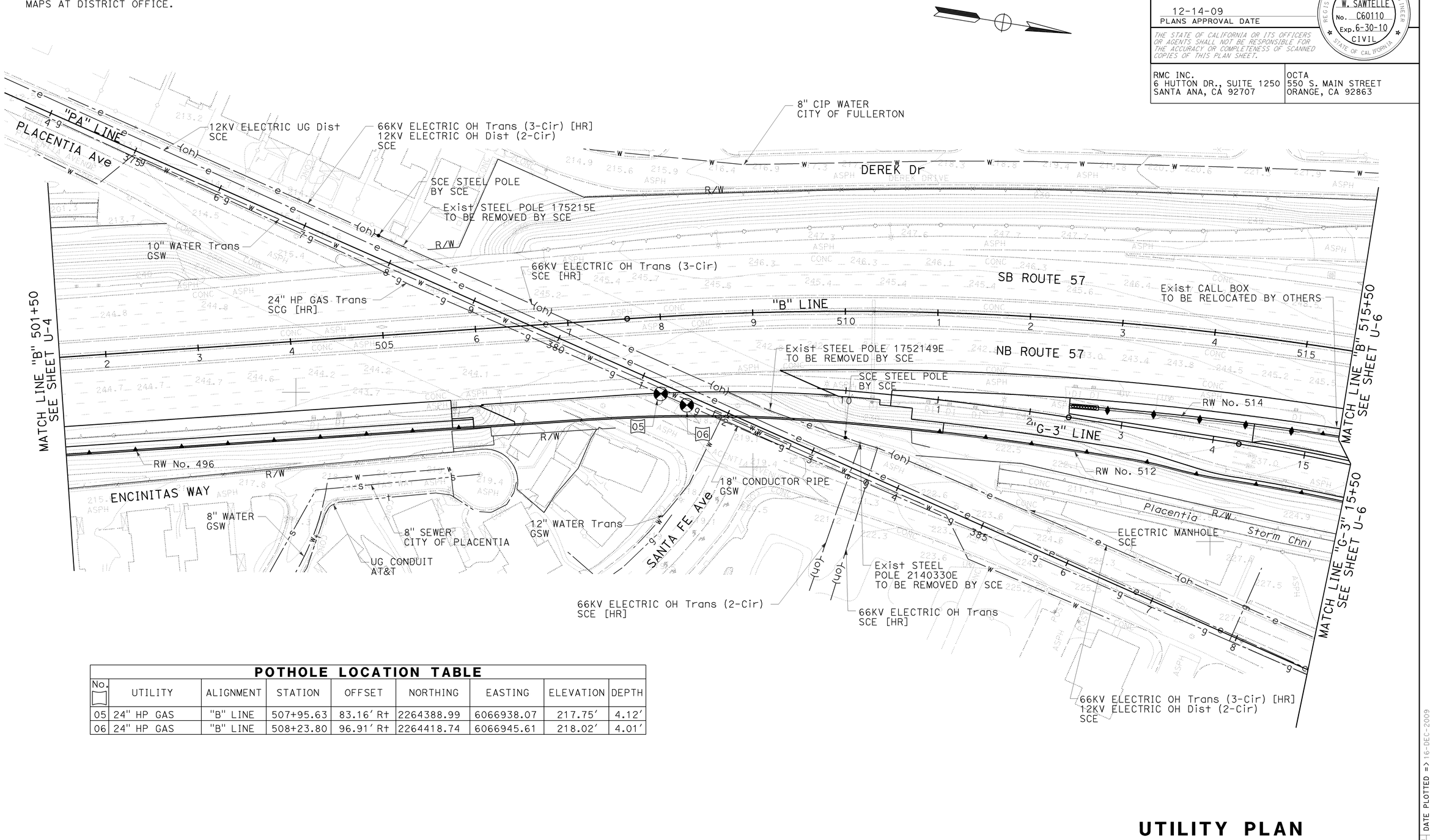

POTHOLE LOCATION TABLE

No.	UTILITY	ALIGNMENT	STATION	OFFSET	NORTHING	EASTING	ELEVATION	DEPTH
05	24" HP GAS	"B" LINE	507+95.63	83.16′ Rt	2264388.99	6066938.07	217.75′	4.12′
06	24" HP GAS	"B" LINE	508+23.80	96.91′ Rt	2264418.74	6066945.61	218.02′	4.01′

UTILITY PLAN

SCALE: 1" = 50′

U-5

THIS PLAN ACCURATE FOR UTILITIES ONLY.

H:\pdata\10105878\Admin\submittals\2009-06-29 FINAL Submittal\100% ELECTRONIC SUBMITTAL - MERGED FILES\0F0311ka005.dgn

STATE OF CALIFORNIA - DEPARTMENT OF TRANSPORTATION
DESIGN
Caltrans

CONSULTANT FUNCTIONAL SUPERVISOR: TONY RAHIMIAN
CALCULATED-DESIGNED BY: JOSEPH SAWTELLE
CHECKED BY: TRIET DANG

REVISED BY	DATE REVISED
JJV	12-3-09

LAST REVISION DATE PLOTTED => 16-DEC-2009
TIME PLOTTED => 08:50
08-01-08

BORDER LAST REVISED 4/11/2008

RELATIVE BORDER SCALE IS IN INCHES 0 1 2 3

USERNAME => trmartin
DGN FILE => c0F031ka005.dgn

CU 12220

EA 0F0311

Dist	COUNTY	ROUTE	POST MILES TOTAL PROJECT	SHEET No.	TOTAL SHEETS
12	Ora	57	16.2/18.6	186	960

Joseph W. Sawtelle 7/15/09
REGISTERED CIVIL ENGINEER DATE

12-14-09
PLANS APPROVAL DATE

JOSEPH W. SAWTELLE No. C60110 Exp. 6-30-10 CIVIL — REGISTERED PROFESSIONAL ENGINEER — STATE OF CALIFORNIA

THE STATE OF CALIFORNIA OR ITS OFFICERS OR AGENTS SHALL NOT BE RESPONSIBLE FOR THE ACCURACY OR COMPLETENESS OF SCANNED COPIES OF THIS PLAN SHEET.

RMC INC.
6 HUTTON DR., SUITE 1250
SANTA ANA, CA 92707

OCTA
550 S. MAIN STREET
ORANGE, CA 92863

NOTE:

1. FOR COMPLETE RIGHT OF WAY AND ACCURATE ACCESS DATA, SEE RIGHT OF WAY RECORD MAPS AT DISTRICT OFFICE.

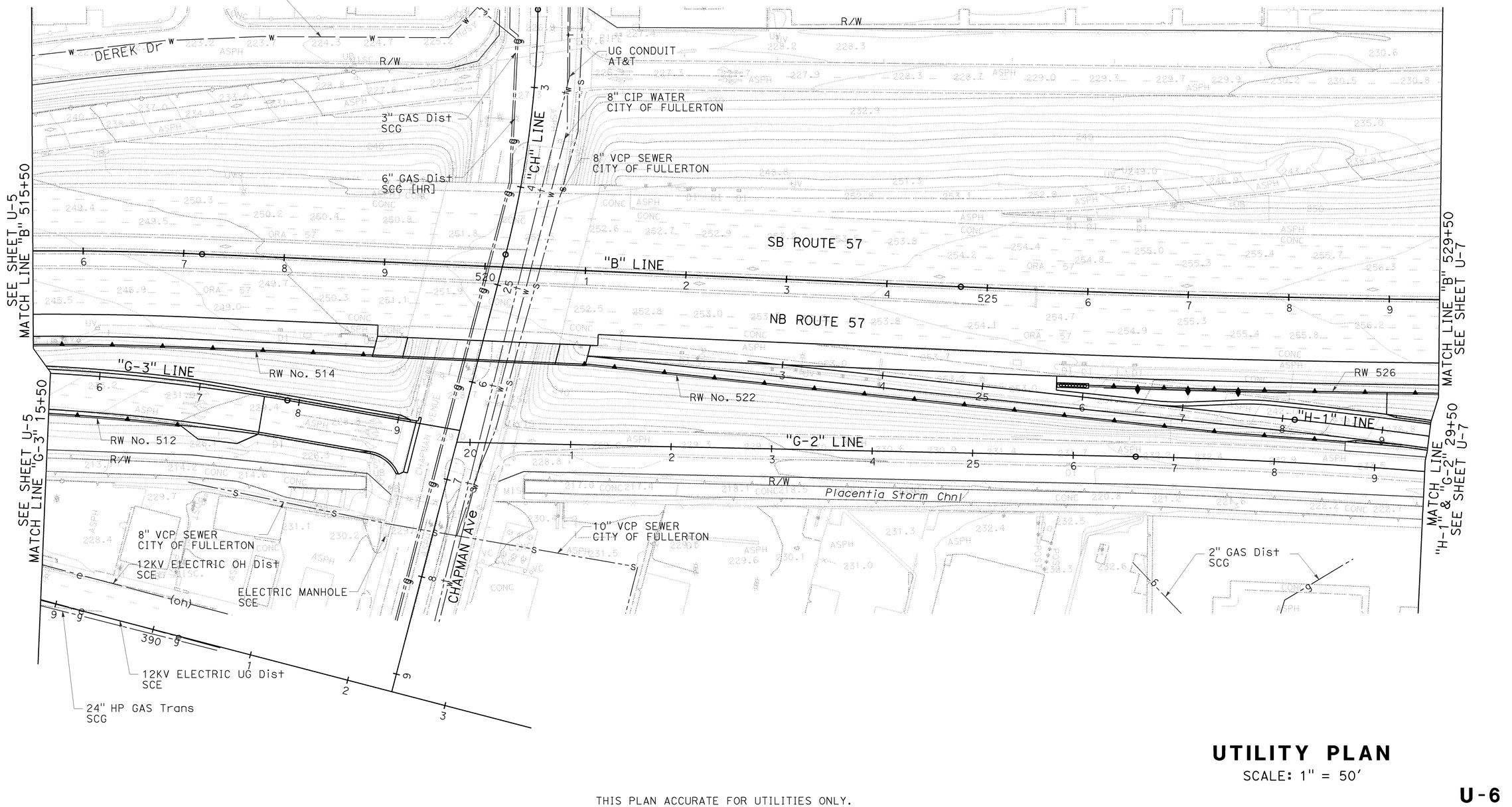

UTILITY PLAN

SCALE: 1" = 50'

U-6

THIS PLAN ACCURATE FOR UTILITIES ONLY.

STATE OF CALIFORNIA - DEPARTMENT OF TRANSPORTATION
DESIGN
Caltrans
CONSULTANT FUNCTIONAL SUPERVISOR: TONY RAHIMIAN
CALCULATED-DESIGNED BY: TRIET DANG
CHECKED BY: JOSEPH SAWTELLE
REVISED BY
DATE REVISED

H:\pdata\10105878\Admin\submittals\2009-06-29 FINAL Submittal\100% ELECTRONIC SUBMITTAL - MERGED FILES\0F0311ka006.dgn

BORDER LAST REVISED 4/11/2008
RELATIVE BORDER SCALE IS IN INCHES 0 1 2 3
USERNAME => trmartin
DGN FILE => c0F031ka006.dgn
CU 12220
EA 0F0311
LAST REVISION 08-01-08
DATE PLOTTED => 16-DEC-2009
TIME PLOTTED => 08:50

Dist	COUNTY	ROUTE	POST MILES TOTAL PROJECT	SHEET No.	TOTAL SHEETS
12	Ora	57	16.2/18.6	187	960

Joseph W. Sawtelle 7/15/09
REGISTERED CIVIL ENGINEER DATE

12-14-09
PLANS APPROVAL DATE

REGISTERED PROFESSIONAL ENGINEER — JOSEPH W. SAWTELLE No. C60110 Exp. 6-30-10 CIVIL — STATE OF CALIFORNIA

THE STATE OF CALIFORNIA OR ITS OFFICERS OR AGENTS SHALL NOT BE RESPONSIBLE FOR THE ACCURACY OR COMPLETENESS OF SCANNED COPIES OF THIS PLAN SHEET.

RMC INC.
6 HUTTON DR., SUITE 1250
SANTA ANA, CA 92707

OCTA
550 S. MAIN STREET
ORANGE, CA 92863

NOTE:

1. FOR COMPLETE RIGHT OF WAY AND ACCURATE ACCESS DATA, SEE RIGHT OF WAY RECORD MAPS AT DISTRICT OFFICE.

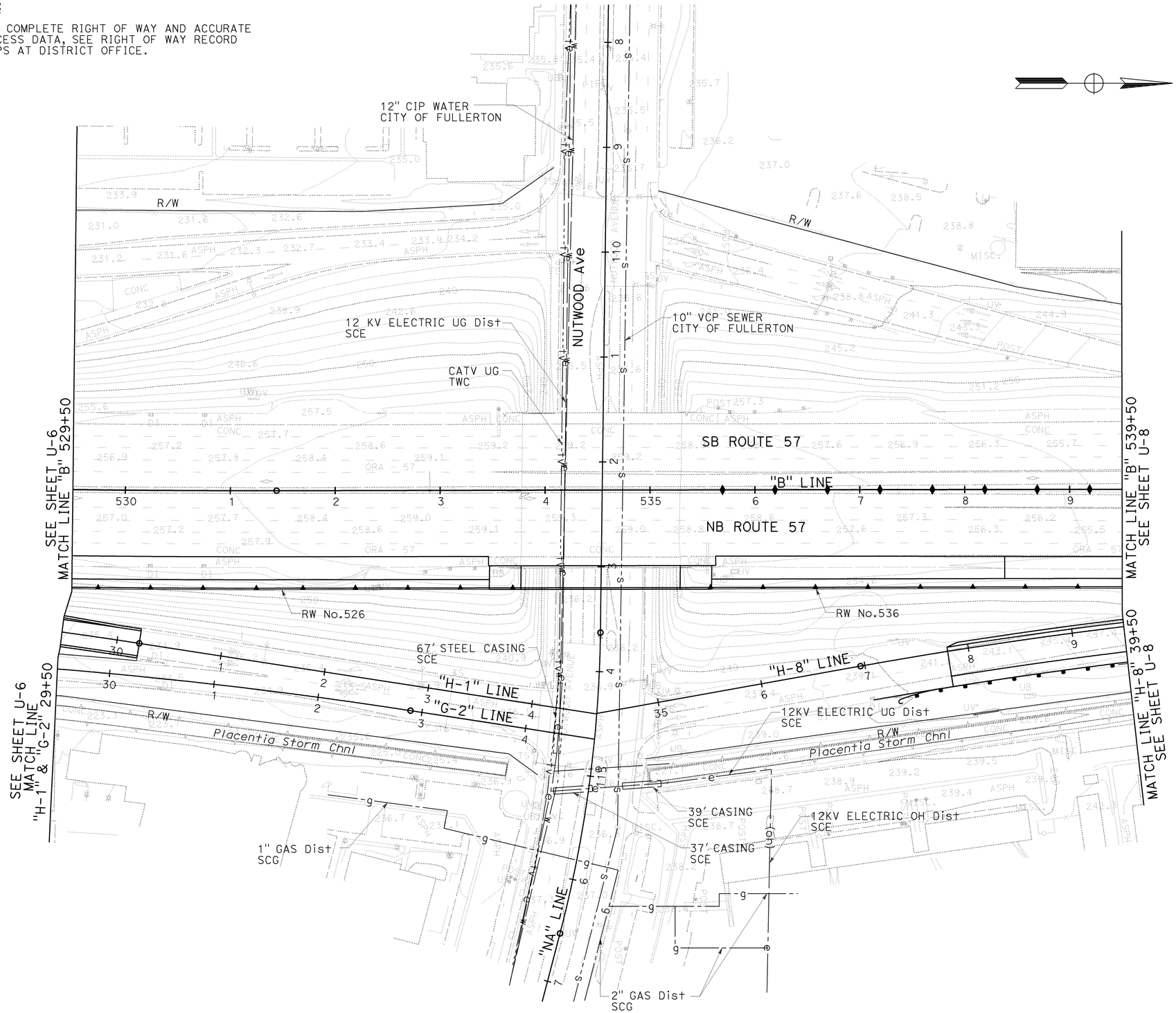

THIS PLAN ACCURATE FOR UTILITIES ONLY.

UTILITY PLAN

SCALE: 1" = 50'

U-7

STATE OF CALIFORNIA - DEPARTMENT OF TRANSPORTATION
DESIGN
CONSULTANT FUNCTIONAL SUPERVISOR: TONY RAHIMIAN
CALCULATED-DESIGNED BY: JOSEPH SAWTELLE
CHECKED BY: TRIET DANG
REVISED BY
DATE REVISED

H:\pdata\10105878\Admin\submittals\2009-06-29 FINAL Submittal\100% ELECTRONIC SUBMITTAL - MERGED FILES\0F0311ka007.dgn

LAST REVISION 08-01-08
DATE PLOTTED => 16-DEC-2009
TIME PLOTTED => 08:50

BORDER LAST REVISED 4/11/2008
RELATIVE BORDER SCALE IS IN INCHES 0 1 2 3
USERNAME => trmartin
DGN FILE => c0F031ka007.dgn
CU 12220
EA 0F0311

Dist	COUNTY	ROUTE	POST MILES TOTAL PROJECT	SHEET No.	TOTAL SHEETS
12	Ora	57	16.2/18.6	188	960

REGISTERED CIVIL ENGINEER — DATE 7/15/09

JOSEPH W. SAWTELLE No. C60110 Exp. 6-30-10 CIVIL — REGISTERED PROFESSIONAL ENGINEER — STATE OF CALIFORNIA

12-14-09
PLANS APPROVAL DATE

THE STATE OF CALIFORNIA OR ITS OFFICERS OR AGENTS SHALL NOT BE RESPONSIBLE FOR THE ACCURACY OR COMPLETENESS OF SCANNED COPIES OF THIS PLAN SHEET.

RMC INC.
6 HUTTON DR., SUITE 1250
SANTA ANA, CA 92707

OCTA
550 S. MAIN STREET
ORANGE, CA 92863

NOTE:

1. FOR COMPLETE RIGHT OF WAY AND ACCURATE ACCESS DATA, SEE RIGHT OF WAY RECORD MAPS AT DISTRICT OFFICE.

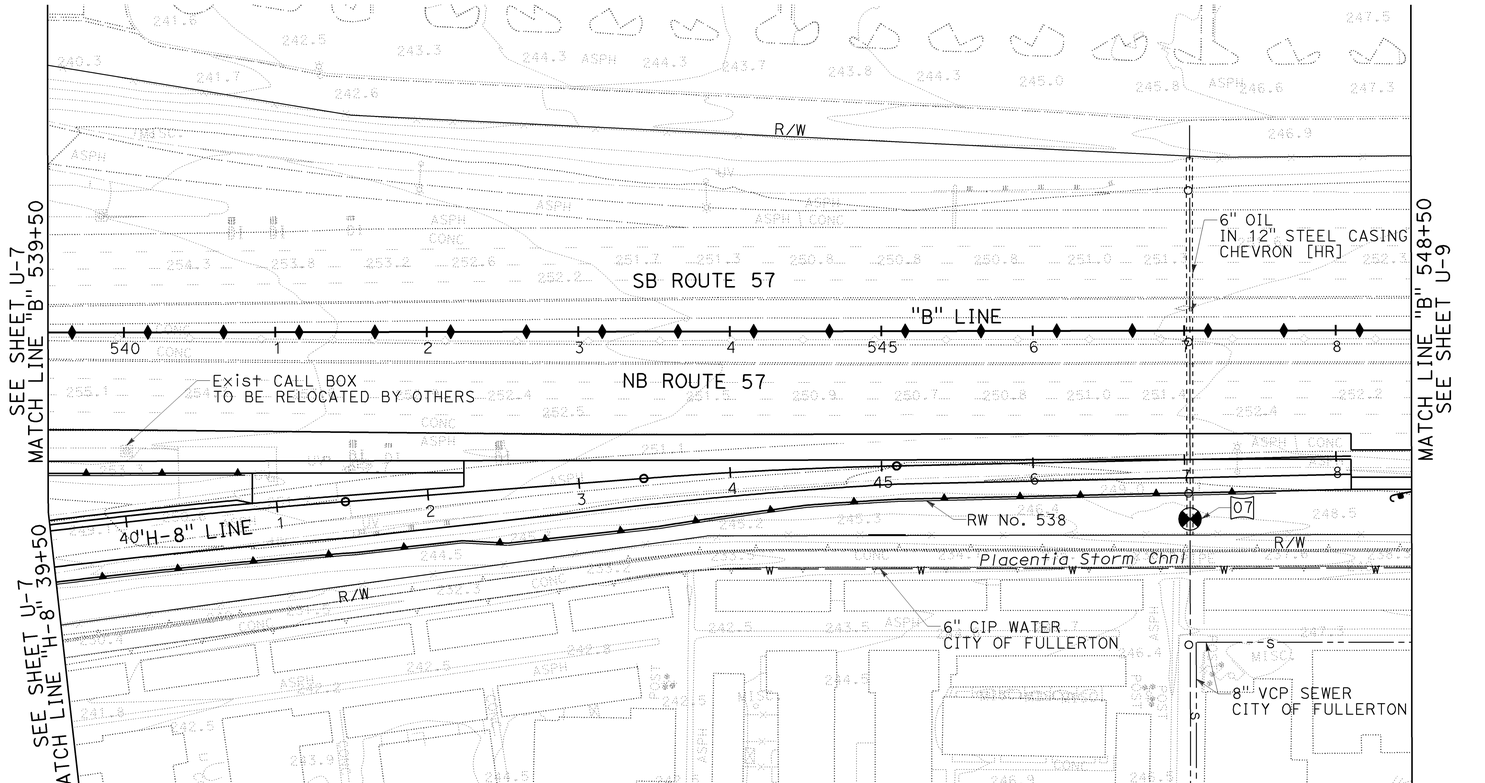

POTHOLE LOCATION TABLE

No.	UTILITY	ALIGNMENT	STATION	OFFSET	NORTHING	EASTING	ELEVATION	DEPTH
07	6" OIL	"B" LINE	547+03.62	124.35' Rt	2268271.80	6066943.26	248.13'	0.46'

THIS PLAN ACCURATE FOR UTILITIES ONLY.

UTILITY PLAN

SCALE: 1" = 50'

U-8

LAST REVISION DATE PLOTTED => 16-DEC-2009
TIME PLOTTED => 08:50
08-01-08

STATE OF CALIFORNIA - DEPARTMENT OF TRANSPORTATION
DESIGN
CONSULTANT FUNCTIONAL SUPERVISOR: TONY RAHIMIAN
CALCULATED-DESIGNED BY: TRIET DANG
CHECKED BY: JOSEPH SAWTELLE
REVISED BY
DATE REVISED

H:\pdata\10105878\Admin\submittals\2009-06-29 FINAL Submittal\100% ELECTRONIC SUBMITTAL - MERGED FILES\0F0311ka008.dgn

BORDER LAST REVISED 4/11/2008

RELATIVE BORDER SCALE IS IN INCHES 0 1 2 3

USERNAME => trmartin
DGN FILE => c0F0311ka008.dgn

CU 12220

EA 0F0311

Dist	COUNTY	ROUTE	POST MILES TOTAL PROJECT	SHEET No.	TOTAL SHEETS
12	Ora	57	16.2/18.6	189	960

REGISTERED CIVIL ENGINEER 7/15/09 DATE

12-14-09
PLANS APPROVAL DATE

REGISTERED PROFESSIONAL ENGINEER JOSEPH W. SAWTELLE No. C60110 Exp. 6-30-10 CIVIL STATE OF CALIFORNIA

THE STATE OF CALIFORNIA OR ITS OFFICERS OR AGENTS SHALL NOT BE RESPONSIBLE FOR THE ACCURACY OR COMPLETENESS OF SCANNED COPIES OF THIS PLAN SHEET.

RMC INC.
6 HUTTON DR., SUITE 1250
SANTA ANA, CA 92707

OCTA
550 S. MAIN STREET
ORANGE, CA 92863

NOTE:

1. FOR COMPLETE RIGHT OF WAY AND ACCURATE ACCESS DATA, SEE RIGHT OF WAY RECORD MAPS AT DISTRICT OFFICE.

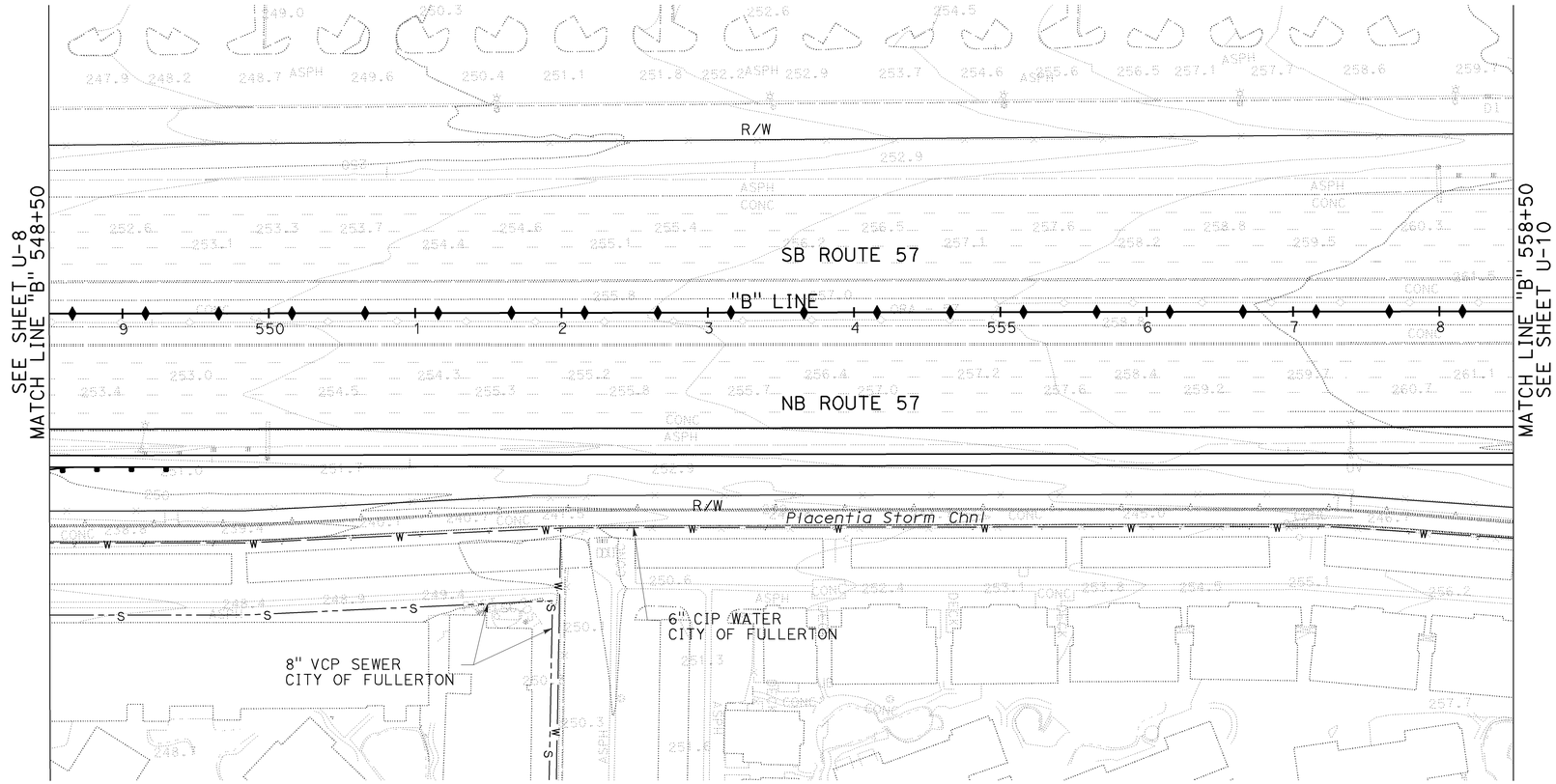

UTILITY PLAN

SCALE: 1" = 50'

U-9

THIS PLAN ACCURATE FOR UTILITIES ONLY.

STATE OF CALIFORNIA - DEPARTMENT OF TRANSPORTATION
Caltrans
DESIGN

CONSULTANT FUNCTIONAL SUPERVISOR: TONY RAHIMIAN
CALCULATED-DESIGNED BY: TRIET DANG
CHECKED BY: JOSEPH SAWTELLE
REVISED BY
DATE REVISED

H:\pdata\10105878\Admin\submittals\2009-06-29 FINAL Submittal\100% ELECTRONIC SUBMITTAL - MERGED FILES\2009\08-01-08\c0F031ka009.dgn

LAST REVISION 08-01-08
DATE PLOTTED => 16-DEC-2009
TIME PLOTTED => 08:50

BORDER LAST REVISED 4/11/2008
RELATIVE BORDER SCALE IS IN INCHES 0 1 2 3
USERNAME => trmartin
DGN FILE => c0F031ka009.dgn
CU 12220
EA 0F0311

Dist	COUNTY	ROUTE	POST MILES TOTAL PROJECT	SHEET No.	TOTAL SHEETS
12	Ora	57	16.2/18.6	190	960

Joseph W. Sawtelle 7/15/09
REGISTERED CIVIL ENGINEER DATE

JOSEPH W. SAWTELLE No. C60110 Exp. 6-30-10 CIVIL — REGISTERED PROFESSIONAL ENGINEER — STATE OF CALIFORNIA

12-14-09
PLANS APPROVAL DATE

THE STATE OF CALIFORNIA OR ITS OFFICERS OR AGENTS SHALL NOT BE RESPONSIBLE FOR THE ACCURACY OR COMPLETENESS OF SCANNED COPIES OF THIS PLAN SHEET.

RMC INC.
6 HUTTON DR., SUITE 1250
SANTA ANA, CA 92707

OCTA
550 S. MAIN STREET
ORANGE, CA 92863

NOTE:

1. FOR COMPLETE RIGHT OF WAY AND ACCURATE ACCESS DATA, SEE RIGHT OF WAY RECORD MAPS AT DISTRICT OFFICE.

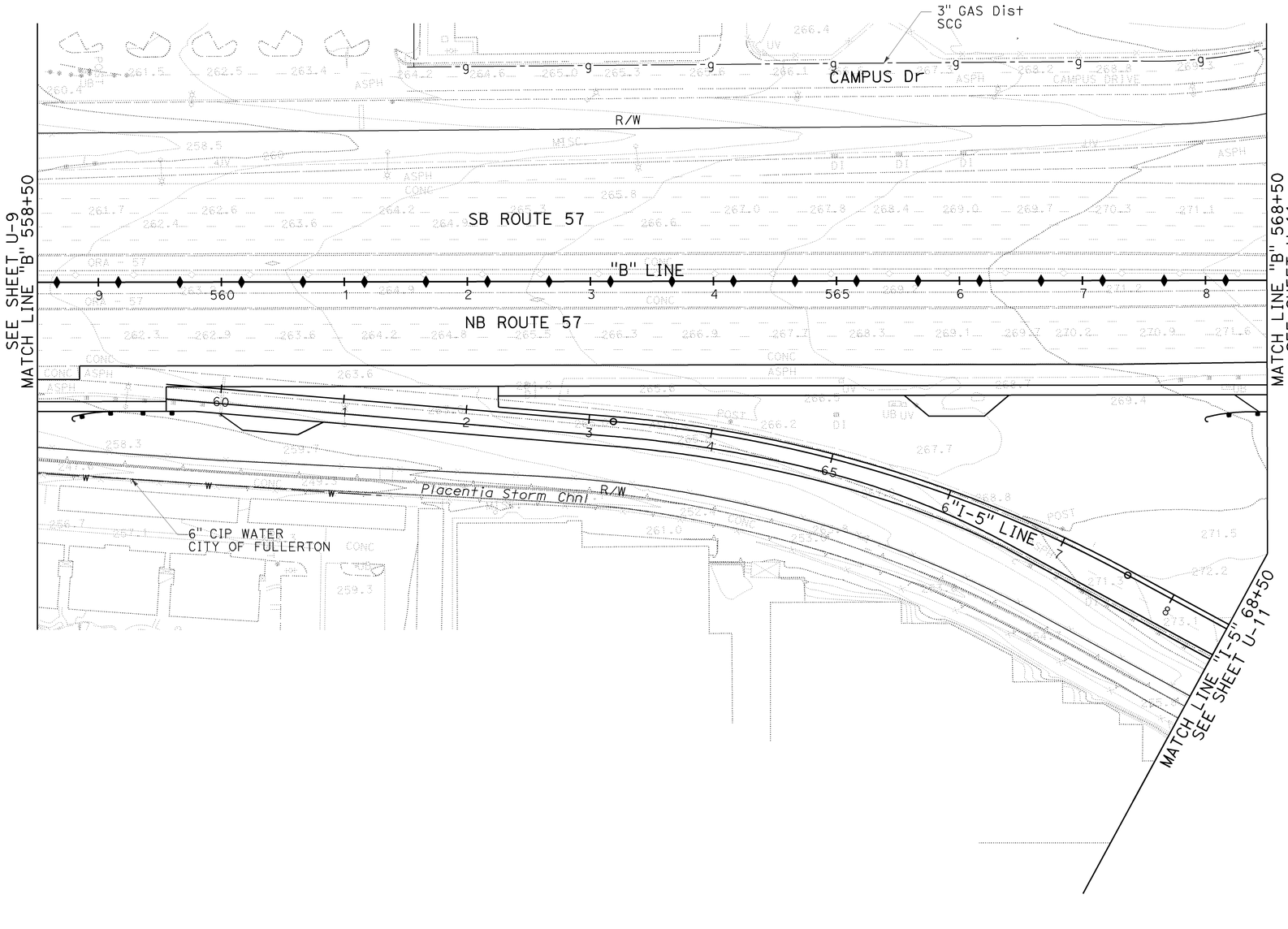

UTILITY PLAN

SCALE: 1" = 50'

U-10

THIS PLAN ACCURATE FOR UTILITIES ONLY.

LAST REVISION | DATE PLOTTED => 16-DEC-2009
08-01-08 | TIME PLOTTED => 08:51

H:\pdata\10105878\Admin\submittals\2009-06-29 FINAL Submittal\100% ELECTRONIC SUBMITTAL\c0F0311ka010.dgn

STATE OF CALIFORNIA - DEPARTMENT OF TRANSPORTATION	CONSULTANT FUNCTIONAL SUPERVISOR	CALCULATED-DESIGNED BY	CHECKED BY	DRAWN BY	REVISED BY	DATE REVISED
DESIGN	TONY RAHIMIAN	TRIET DANG	JOSEPH SAWTELLE	MERGED FILES 2009		

BORDER LAST REVISED 4/11/2008

RELATIVE BORDER SCALE IS IN INCHES 0 1 2 3

USERNAME => trmartin
DGN FILE => c0F0311ka010.dgn

CU 12220

EA 0F0311

Dist	COUNTY	ROUTE	POST MILES TOTAL PROJECT	SHEET No.	TOTAL SHEETS
12	Ora	57	16.2/18.6	191	960

REGISTERED CIVIL ENGINEER 7/15/09 DATE

12-14-09
PLANS APPROVAL DATE

REGISTERED PROFESSIONAL ENGINEER JOSEPH W. SAWTELLE No. C60110 Exp. 6-30-10 CIVIL STATE OF CALIFORNIA

THE STATE OF CALIFORNIA OR ITS OFFICERS OR AGENTS SHALL NOT BE RESPONSIBLE FOR THE ACCURACY OR COMPLETENESS OF SCANNED COPIES OF THIS PLAN SHEET.

RMC INC.
6 HUTTON DR., SUITE 1250
SANTA ANA, CA 92707

OCTA
550 S. MAIN STREET
ORANGE, CA 92863

NOTE:

1. FOR COMPLETE RIGHT OF WAY AND ACCURATE ACCESS DATA, SEE RIGHT OF WAY RECORD MAPS AT DISTRICT OFFICE.

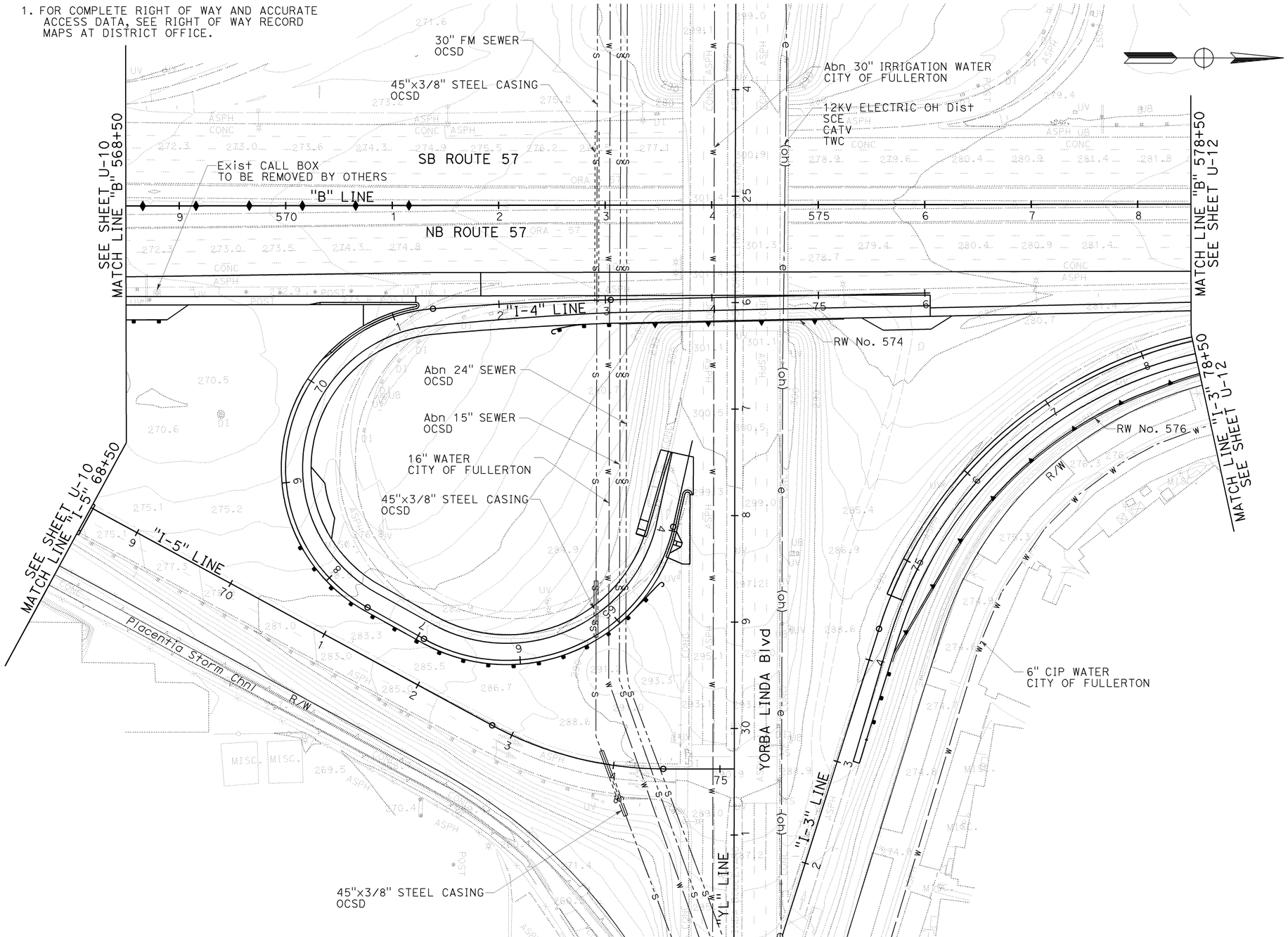

UTILITY PLAN

SCALE: 1" = 50'

THIS PLAN ACCURATE FOR UTILITIES ONLY

U-11

STATE OF CALIFORNIA - DEPARTMENT OF TRANSPORTATION
Caltrans
DESIGN

CONSULTANT FUNCTIONAL SUPERVISOR: TONY RAHIMIAN
CALCULATED-DESIGNED BY: TRIET DANG
CHECKED BY: JOSEPH SAWTELLE
REVISED BY
DATE REVISED

H:\pdata\10105878\Admin\submittals\2009-06-29 FINAL Submittal\100% ELECTRONIC SUBMITTAL - MERGED FILES2009\c0f031ka011.dgn

LAST REVISION 08-01-08
DATE PLOTTED => 16-DEC-2009
TIME PLOTTED => 10:16

BORDER LAST REVISED 4/11/2008
RELATIVE BORDER SCALE IS IN INCHES 0 1 2 3
USERNAME => trmariak
DGN FILE => c0F031ka011.dgn
CU 12220
EA 0F0311

Dist	COUNTY	ROUTE	POST MILES TOTAL PROJECT	SHEET No.	TOTAL SHEETS
12	Ora	57	16.2/18.6	192	960

Joseph W. Sawtelle 7/15/09
REGISTERED CIVIL ENGINEER DATE

12-14-09
PLANS APPROVAL DATE

REGISTERED PROFESSIONAL ENGINEER — JOSEPH W. SAWTELLE No. C60110 Exp. 6-30-10 CIVIL — STATE OF CALIFORNIA

THE STATE OF CALIFORNIA OR ITS OFFICERS OR AGENTS SHALL NOT BE RESPONSIBLE FOR THE ACCURACY OR COMPLETENESS OF SCANNED COPIES OF THIS PLAN SHEET.

RMC INC.
6 HUTTON DR., SUITE 1250
SANTA ANA, CA 92707

OCTA
550 S. MAIN STREET
ORANGE, CA 92863

NOTE:

1. FOR COMPLETE RIGHT OF WAY AND ACCURATE ACCESS DATA, SEE RIGHT OF WAY RECORD MAPS AT DISTRICT OFFICE.

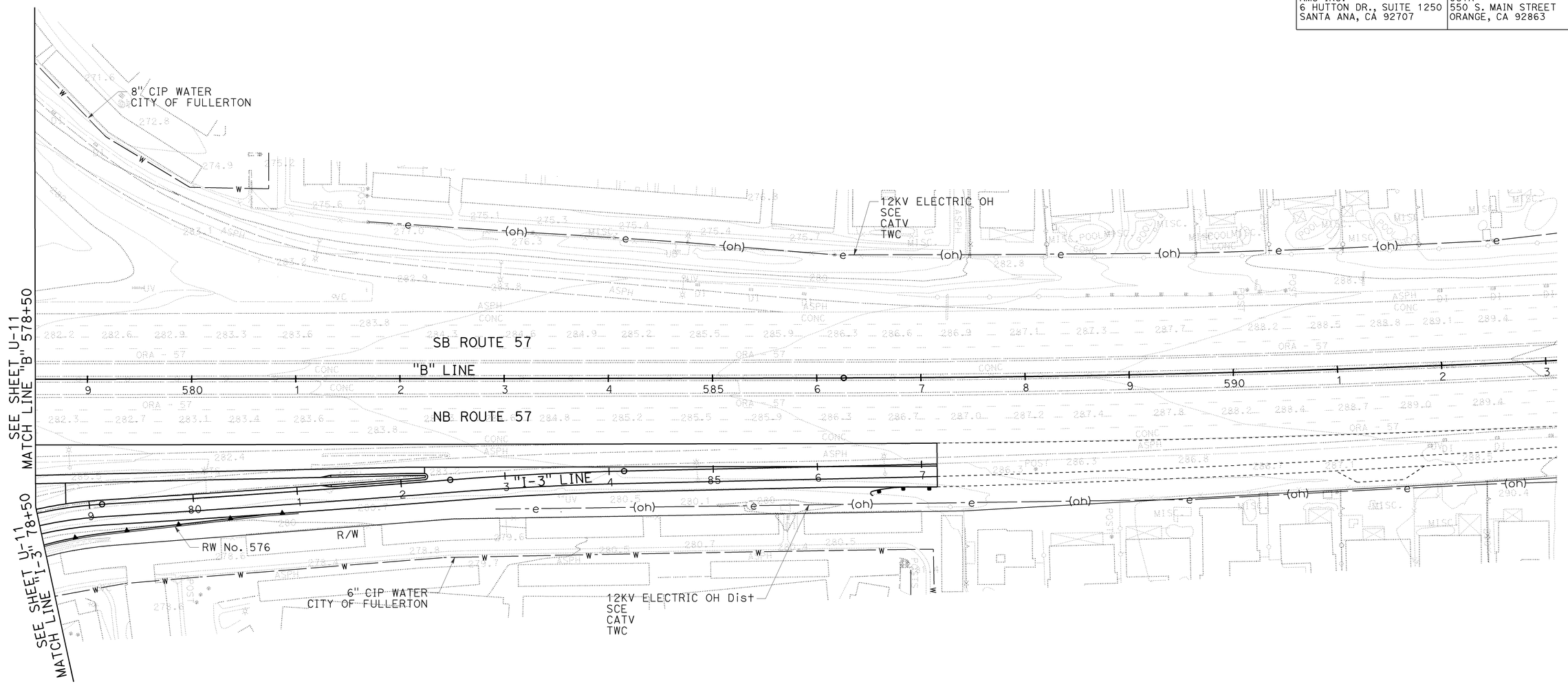

THIS PLAN ACCURATE FOR UTILITIES ONLY

UTILITY PLAN

SCALE: 1" = 50'

U-12

H:\pdata\10105878\Admin\submittals\2009-06-29 FINAL Submittal\100% ELECTRONIC SUBMITTAL - MERGED FILES 2009\c0F0311ka012.dgn

STATE OF CALIFORNIA - DEPARTMENT OF TRANSPORTATION | DESIGN | CONSULTANT FUNCTIONAL SUPERVISOR: TONY RAHIMIAN | CALCULATED-DESIGNED BY: JOSEPH SAWTELLE | CHECKED BY: TRIET DANG | REVISED BY | DATE REVISED

LAST REVISION DATE PLOTTED => 16-DEC-2009
TIME PLOTTED => 10:16
08-01-08

BORDER LAST REVISED 4/11/2008 | RELATIVE BORDER SCALE IS IN INCHES 0 1 2 3 | USERNAME => trmariak | DGN FILE => c0F0311ka012.dgn | CU 12220 | EA 0F0311

Dist	COUNTY	ROUTE	POST MILES TOTAL PROJECT	SHEET No.	TOTAL SHEETS
12	Ora	57	16.2/18.6	193	960

REGISTERED CIVIL ENGINEER 7/15/09 DATE

12-14-09
PLANS APPROVAL DATE

REGISTERED PROFESSIONAL ENGINEER EMILY L. FLAGG No. C68614 Exp. 09-30-11 CIVIL STATE OF CALIFORNIA

THE STATE OF CALIFORNIA OR ITS OFFICERS OR AGENTS SHALL NOT BE RESPONSIBLE FOR THE ACCURACY OR COMPLETENESS OF SCANNED COPIES OF THIS PLAN SHEET.

PBS&J
625 THE CITY DRIVE
ORANGE, CA 92868

OCTA
550 S. MAIN STREET
ORANGE, CA 92863

LEGEND

- CONSTRUCTION AREA SIGN (1 POST)
- CONSTRUCTION AREA SIGN (2 POST)
- (X) - CONSTRUCTION AREA SIGN No.

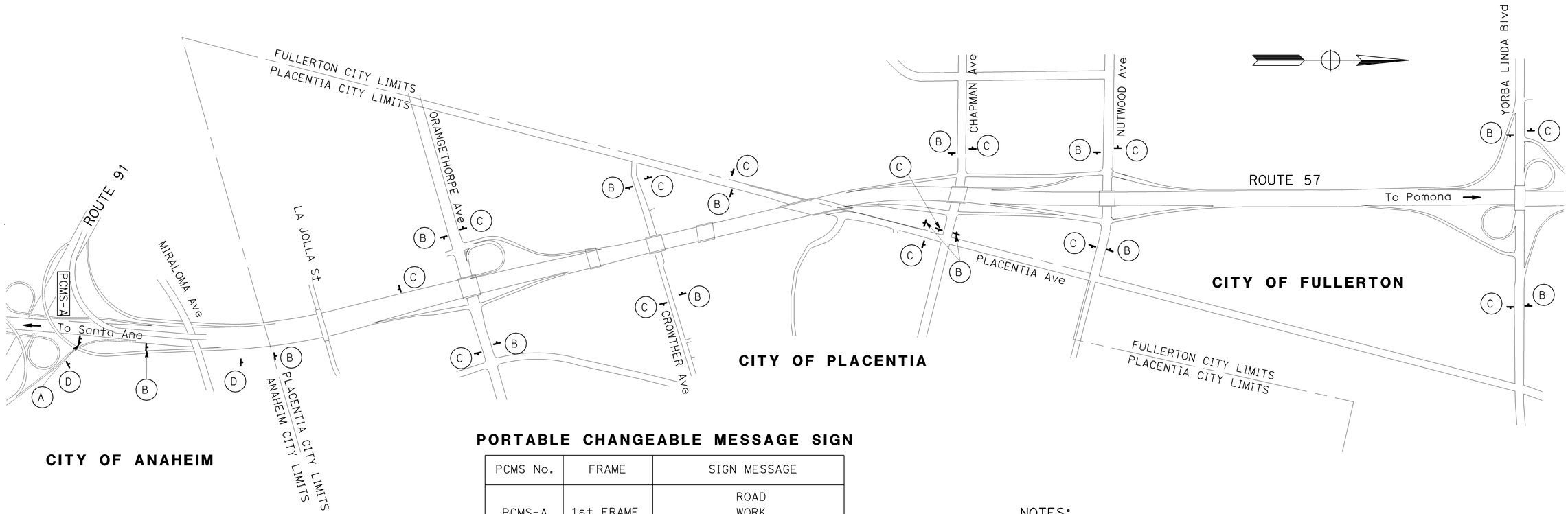

PORTABLE CHANGEABLE MESSAGE SIGN

PCMS No.	FRAME	SIGN MESSAGE
PCMS-A	1st FRAME	ROAD WORK AHEAD

STATIONARY MOUNTED CONSTRUCTION AREA SIGNS

SIGN No.	SIGN CODE	PANEL SIZE (INCHES)	SIGN MESSAGE	"C" Dim (Ft)	WOOD POST LENGTH 4X4	4X6	6X6	No. OF POST ONE POST	TWO POST	No. OF SIGNS
(A)	C40(CA)	144 X 60	TRAFFIC FINES DOUBLED IN CONSTRUCTION ZONES	7			17'-0"		X	1
(B)	W20-1	48 X 48	ROAD WORK AHEAD	7		17'-6"		X		14
(C)	G20-2	36 X 18	END ROAD WORK	7	12'-0"			X		13
(D)	C40(CA)	108 X 24	TRAFFIC FINES DOUBLED IN CONSTRUCTION ZONES	7		15'-0"			X	2

NOTES:

1. LOCATIONS OF CONSTRUCTION AREA SIGNS SHOWN ARE APPROXIMATE. EXACT LOCATIONS TO BE DETERMINED BY THE ENGINEER.
2. CONSTRUCTION AREA SIGNS SHALL BE LOCATED APPROXIMATELY 100 FEET AWAY FROM INTERSECTIONS.
3. REMOVE OR COVER ALL CONFLICTING SIGNS.
4. FOR ADDITIONAL CONSTRUCTION AREA SIGNS, SEE STAGE CONSTRUCTION AND TRAFFIC HANDLING PLANS, AND TRAFFIC HANDLING (DETOUR) PLANS.

CONSTRUCTION AREA SIGNS

NO SCALE

THIS PLAN ACCURATE FOR STAGE CONSTRUCTION AREA SIGN WORK ONLY.

CS-1

STATE OF CALIFORNIA - DEPARTMENT OF TRANSPORTATION
Caltrans
CONSULTANT FUNCTIONAL SUPERVISOR: ALAEDIN MOUBAYED
CALCULATED-DESIGNED BY: EMILY FLAGG
CHECKED BY: SHERRY NOUR
REVISED BY
DATE REVISED

H:\pdata\10105878\Admin\submittals\2009-07-15 FINAL Electronic-Only Submittal\DGN\maddiRLOT File16-DEC-2009 10:16 SUBMITTAL\c0F0311a001.dgn

LAST REVISION 00-00-00
DATE PLOTTED => 16-DEC-2009
TIME PLOTTED => 10:16

Dist	COUNTY	ROUTE	POST MILES TOTAL PROJECT	SHEET No.	TOTAL SHEETS
12	Ora	57	16.2/18.6	194	960

REGISTERED CIVIL ENGINEER — DATE 7/15/09

ARMANDO SOLIS No. 72012 Exp. 6-30-10 CIVIL — REGISTERED PROFESSIONAL ENGINEER — STATE OF CALIFORNIA

12-14-09
PLANS APPROVAL DATE

THE STATE OF CALIFORNIA OR ITS OFFICERS OR AGENTS SHALL NOT BE RESPONSIBLE FOR THE ACCURACY OR COMPLETENESS OF SCANNED COPIES OF THIS PLAN SHEET.

RBF CONSULTING
14275 ALTON PKWY
IRVINE, CA 92618

OCTA
550 S. MAIN STREET
ORANGE, CA 92863

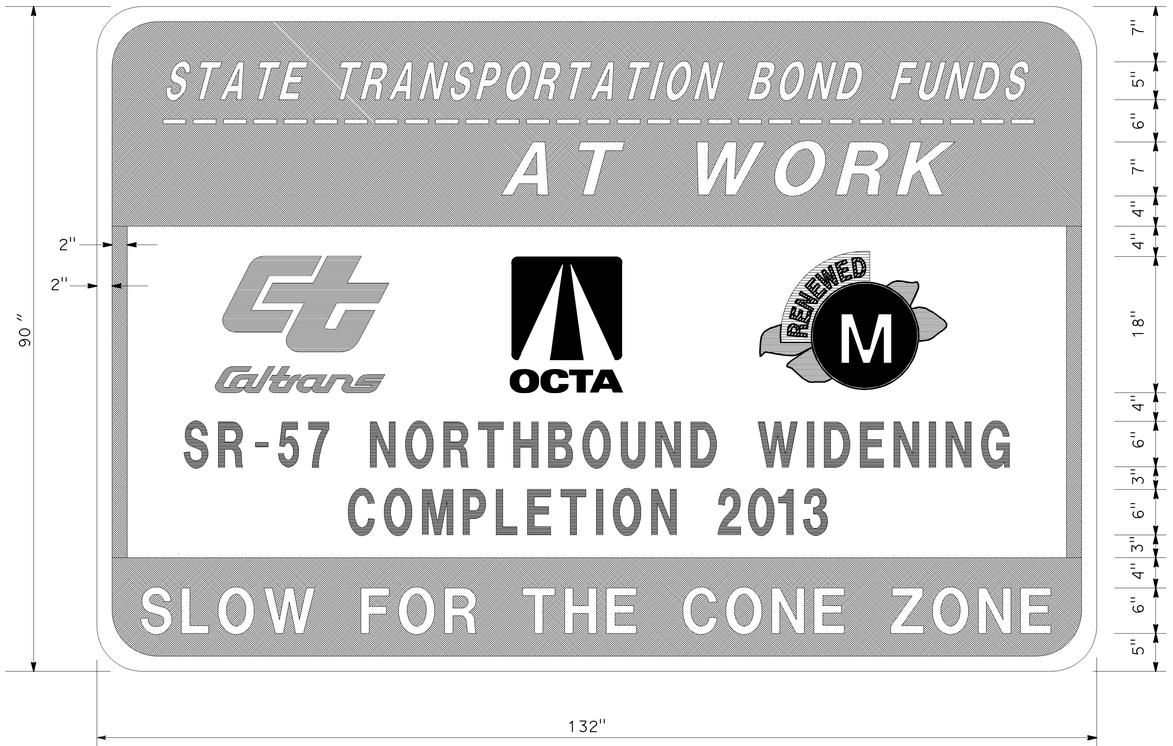

TYPE 1

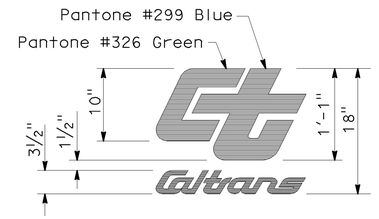

DETAIL A-1

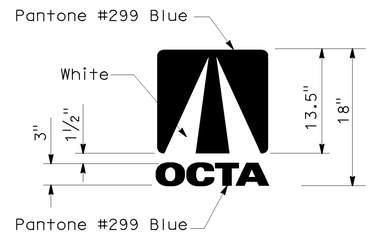

DETAIL A-2

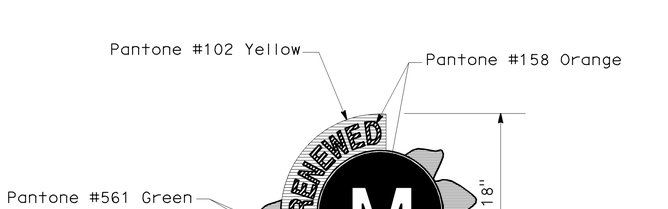

DETAIL A-3

COLORS: BORDER- PURPLE (PANTONE #520)
LEGEND - BLACK, WHITE, AND ORANGE
BACKGROUND - PURPLE (PANTONE #520) AND WHITE
CT LOGO - GREEN (PANTONE #326) AND BLUE (PANTONE #299)

1. Vector files for logos to be supplied to the sign manufacturer upon request.
2. Comply with 2006 Standard Plans S93 and S94 for sign panel.
3. Comply with ASTM Type II retroreIfective sheeting (or higher grade) for all colors except black.
4. Legend and artwork may be transparent film, ink, or applied decals.
5. Overlay entire sign face with premium grade graffiti film.
6. Comply with retroreflective sheeting manufacturer's recommendations for transparent film, ink, applied decals, and graffiti film.

THIS PLAN ACCURATE FOR CONSTRUCTION AREA SIGN WORK ONLY.

CONSTRUCTION AREA SIGN

CONSTRUCTION PROJECT FUNDING IDENTIFICATION SIGN

NO SCALE

CS-2

LAST REVISION | DATE PLOTTED => 16-DEC-2009
08-01-08 | TIME PLOTTED => 10:16

STATE OF CALIFORNIA - DEPARTMENT OF TRANSPORTATION
Caltrans

CONSULTANT FUNCTIONAL SUPERVISOR: MARK J. ESPOSITO
CALCULATED-DESIGNED BY: ROSALVA NAVARRO
CHECKED BY: ARMANDO SOLIS
REVISED BY
DATE REVISED

H:\pdata\10105878\Admin\submittals\2009-07-15 FINAL Electronic-Only Submittal\DGN roadid RLOT File 86 2009-07-15 FINAL SUBMITTAL\c0F0311a002.dgn

BORDER LAST REVISED 4/11/2008

RELATIVE BORDER SCALE IS IN INCHES 0 1 2 3

USERNAME => trmariak
DGN FILE => c0F0311a002.dgn

CU 12220

EA 0F0311

Dist	COUNTY	ROUTE	POST MILES TOTAL PROJECT	SHEET No.	TOTAL SHEETS
12	Ora	57	16.2/18.6	195	960

REGISTERED CIVIL ENGINEER — DATE 7/15/09

12-14-09
PLANS APPROVAL DATE

REGISTERED PROFESSIONAL ENGINEER — EMILY L. FLAGG — No. C68614 — Exp. 09-30-11 — CIVIL — STATE OF CALIFORNIA

THE STATE OF CALIFORNIA OR ITS OFFICERS OR AGENTS SHALL NOT BE RESPONSIBLE FOR THE ACCURACY OR COMPLETENESS OF SCANNED COPIES OF THIS PLAN SHEET.

PBS&J
625 THE CITY DRIVE
ORANGE, CA 92868

OCTA
550 S. MAIN STREET
ORANGE, CA 92863

GENERAL NOTES (ALL STAGES):

1. ALL CONFLICTING Pvmt DELINEATION SHALL BE REMOVED (NOT BLACKED OUT) PRIOR TO STARTING WORK ON EACH STAGE. ALL CONFLICTING SIGNS SHALL BE COVERED OR REMOVED.
2. FINAL Pvmt DELINEATION IDENTIFIED ON STAGE Const PLANS SHALL BE PERMANENT Pvmt DELINEATION AS SHOWN ON THE Pvmt DELINEATION (PD) PLANS.
3. LANE WIDTHS SHALL BE 11 FT Min UNLESS OTHERWISE NOTED. INSIDE/OUTSIDE Shld DIMENSIONS ARE MEASURED FROM THE FLOW LINE OF BARRIER, CURB, OR Temp RAILING (TYPE K) UNLESS OTHERWISE NOTED.
4. A Min CLEARANCE OF 1 FT SHALL BE PROVIDED BETWEEN Exist OR Temp EDGE OF TRAVEL WAY AND Temp RAILING (TYPE K) UNLESS OTHERWISE NOTED.
5. MESSAGE ON PORTABLE CHANGEABLE MESSAGE SIGNS SHALL BE APPROVED BY THE ENGINEER PRIOR TO PLACEMENT.
6. THE DESCRIPTIVE TERM "JOIN" WHEN USED ON THE PLANS REFERS TO THE JOINING OF STAGE Const STRIPING OR Temp RAILING (TYPE K) WITH Exist, FINAL, OR PREVIOUS STAGE Const DELINEATION UNLESS OTHERWISE NOTED.
7. FOR ADDITIONAL CONSTRUCTION AREA SIGNS AND DETAILS, SEE CONSTRUCTION AREA SIGN PLANS.
8. FOR ADDITIONAL "STAGE-SPECIFIC" Const NOTES SEE STAGE Const INDEX SHEETS FOR EACH STAGE.
9. Temp TRAFFIC SCREEN SHALL BE PLACED ON TOP OF Temp RAILING (TYPE K) ADJACENT TO TRAVEL WAY AS SHOWN OR AS DIRECTED BY THE ENGINEER.
10. ALL APPROACH TAPERS FOR Temp RAILING (TYPE K) SHALL BE AT A 10:1 OR FLATTER TRANSITION AND SHALL HAVE APPROACH CRASH CUSHIONS AS SHOWN ON THE PLANS.
11. EXACT LOCATION AND POSITION OF ROADSIDE SIGNS TO BE DETERMINED BY THE ENGINEER.
12. STATION / OFFSET DATA SHOWN FOR Temp RAILING (TYPE K) IS TO THE CENTER OF THE RAILING.

LEGEND:

- CONSTRUCTION COMPLETED IN PREVIOUS STAGE
- CONSTRUCTION COMPLETED DURING CLOSURE
- BRIDGE CONSTRUCTION AREA THIS STAGE
- CONSTRUCTION WORK AREA THIS STAGE
- DIRECTION OF TRAFFIC
- TEMPORARY RAILING (TYPE K)
- TEMPORARY RAILING (TYPE K) WITH Temp TRAFFIC SCREEN (SECTION VIEW)
- TEMPORARY RAILING (TYPE K) (SECTION VIEW)
- TEMPORARY RAILING (TYPE K) TO REMAIN IN PLACE FROM PREVIOUS STAGE
- TEMPORARY CRASH CUSHION ARRAY PER PLAN
- TEMPORARY CRASH CUSHION ARRAY FROM PREVIOUS STAGE
- CHANNELIZER (SURFACE MOUNTED)
- CONSTRUCTION AREA SIGN (1 POST)
- CONSTRUCTION AREA SIGN (2 POST)
- TYPE III BARRICADE (WITH SIGN AS NOTED)
- FLASHING ARROWHEAD SIGN (FAS)
- E — EXISTING PAVEMENT DELINEATION TO REMAIN
- NO. — CONSTRUCTION AREA SIGN (STAGE CONSTRUCTION)
- F — FINAL PAVEMENT DELINEATION (SEE PAVEMENT DELINEATION PLANS)
- E — OVERHEAD SIGN STRUCTURE (SEE SIGN PLANS)
- No. — PAVEMENT DELINEATION DETAIL PAINT TRAFFIC STRIPE (2 COAT)

- ANGLE POINT
- No. — DRAINAGE NOTES FOR TEMPORARY WORK
- CS — CONSTRUCTION AREA SIGN AND/OR TEMPORARY OVERLAY
- X — CONSTRUCTION FEATURE
- X — TRAFFIC HANDLING NOTE
- (X) → — TRAFFIC THIS STAGE AND No. OF LANES IN USE

ABBREVIATIONS:

C&G = CURB AND GUTTER

EA = EACH

THIS PLAN ACCURATE FOR STAGE CONSTRUCTION AND TRAFFIC HANDLING WORK ONLY.

STAGE CONSTRUCTION AND TRAFFIC HANDLING PLAN
(GENERAL NOTES)

NO SCALE

SC-1

LAST REVISION DATE PLOTTED => 16-DEC-2009
00-00-00 TIME PLOTTED => 10:16

H:\pdata\10105878\Admin\submittals\2009-07-15 FINAL Electronic-Only Submittal\DGN\final\DGN\radial PLOT File86 20090720 5 OF 31 FINAL SUBMITTAL \c0F031ma001.dgn

STATE OF CALIFORNIA - DEPARTMENT OF TRANSPORTATION	CONSULTANT FUNCTIONAL SUPERVISOR	CALCULATED-DESIGNED BY	CHECKED BY	REVISED BY	DATE REVISED
Caltrans	ALAEDIN MOUBAYED	EMILY FLAGG	SHERRY NOUR		

BORDER LAST REVISED 4/11/2008 — RELATIVE BORDER SCALE IS IN INCHES 0 1 2 3 — USERNAME => trmariak — DGN FILE => c0F031ma001.dgn — CU 12220 — EA 0F0311

Dist	COUNTY	ROUTE	POST MILES TOTAL PROJECT	SHEET No.	TOTAL SHEETS
12	Ora	57	16.2/18.6	196	960

REGISTERED CIVIL ENGINEER — DATE 7/15/09

EMILY L. FLAGG No. C68614 Exp.09-30-11 CIVIL — REGISTERED PROFESSIONAL ENGINEER — STATE OF CALIFORNIA

12-14-09
PLANS APPROVAL DATE

THE STATE OF CALIFORNIA OR ITS OFFICERS OR AGENTS SHALL NOT BE RESPONSIBLE FOR THE ACCURACY OR COMPLETENESS OF SCANNED COPIES OF THIS PLAN SHEET.

PBS&J
625 THE CITY DRIVE
ORANGE, CA 92868

OCTA
550 S. MAIN STREET
ORANGE, CA 92863

CONSTRUCTION NOTES (ALL STAGES):

1 - CONSTRUCT SOUNDWALL AND/OR RETAINING WALL.

2 - CONSTRUCT BRIDGE SEE STRUCTURE PLANS FOR CONSTRUCTION AT CHAPMAN Ave (Br No. 55-0456 R) AND NUTWOOD Ave (Br No. 55-0464 R).

3 - INSTALL SEISMIC RETROFIT IMPROVEMENTS ON EXISTING NORTHBOUND STRUCTURE COLUMNS.

4 - CONSTRUCT PORTION OF NB MAINLINE FREEWAY IMPROVEMENTS.

5 - CONSTRUCT PORTION OF NB RAMP IMPROVEMENTS.

6 - INSTALL NEW OVERHEAD SIGN STRUCTURE. SEE SIGN PLANS.

7 - INSTALL NEW OVERHEAD SIGN STRUCTURE POST AND TRUSS ONLY. SEE SIGN PLANS.

8 - REMOVE EXISTING OVERHEAD SIGN STRUCTURE. SEE SIGN PLANS.

9 - INSTALL NEW OVERHEAD SIGN (PANEL ONLY). SEE SIGN PLANS. NIGHT TIME LANE CLOSURE REQUIRED.

10 - REMOVE EXISTING OVERHEAD SIGN (PANEL ONLY). SEE SIGN PLANS. NIGHT TIME LANE CLOSURES REQUIRED.

11 - REMOVE EXISTING OVERHEAD SIGN BRIDGE. SEE SIGN PLANS. NIGHT TIME CLOSURE REQUIRED.

12 - INSTALL SIGN OVERLAY ON OVERHEAD SIGN STRUCTURE. SEE SIGN PLAN. NIGHT TIME LANE CLOSURE REQUIRED.

13 - RELOCATE CHANGEABLE MESSAGE SIGN. SEE TEMPORARY CHANGEABLE MESSAGE SIGN PLAN.

14 - CONSTRUCT Conc BARRIER (TYPE 60) IN MEDIAN.

TRAFFIC HANDLING NOTES (STAGES 1A, 1B, 1C AND 1D):

(1) RESTRIPE EXISTING NB ROUTE 57. REMOVE HOV BUFFER AND SHIFT TRAFFIC TOWARD MEDIAN RAIL.

(2) PLACE TEMPORARY RAILING (TYPE K) WITH TEMPORARY TRAFFIC SCREEN.

(3) RESTRIPE RAMP FOR TEMPORARY TIE-IN TO NB ROUTE 57.

(4) MOVE TRAFFIC ON WB YORBA LINDA Blvd TO NB ROUTE 57 ON-RAMP ("I-3" LINE) TO NEW PAVEMENT AND RESTRIPE RAMP FOR TIE-IN TO NB ROUTE 57 IN STAGE 1B

(5) CLOSURES OF ORANGETHORPE Ave TO NB ROUTE 57 ON-RAMP ("V" LINE) IN STAGE 1A. SEE SHEET TH-2.

(6) CLOSURES OF NB ROUTE 57 TO CHAPMAN Ave OFF-RAMP ("G-3" LINE) IN STAGE 1A. SEE SHEET TH-4.

(7) CLOSURE OF NB ROUTE 57 TO YORBA LINDA Blvd OFF-RAMP ("I-5" LINE) IN STAGE 1A. SEE SHEET TH-7.

(8) CLOSURES OF EB YORBA LINDA Blvd TO NB ROUTE 57 ON-RAMP ("I-4" LINE) IN STAGE 1A. SEE SHEET TH-8.

(9) MOVE TRAFFIC ON EB YORBA LINDA Blvd TO NB ROUTE 57 ON-RAMP ("I-4" LINE) TO NEW RAMP FOR STAGE 1C.

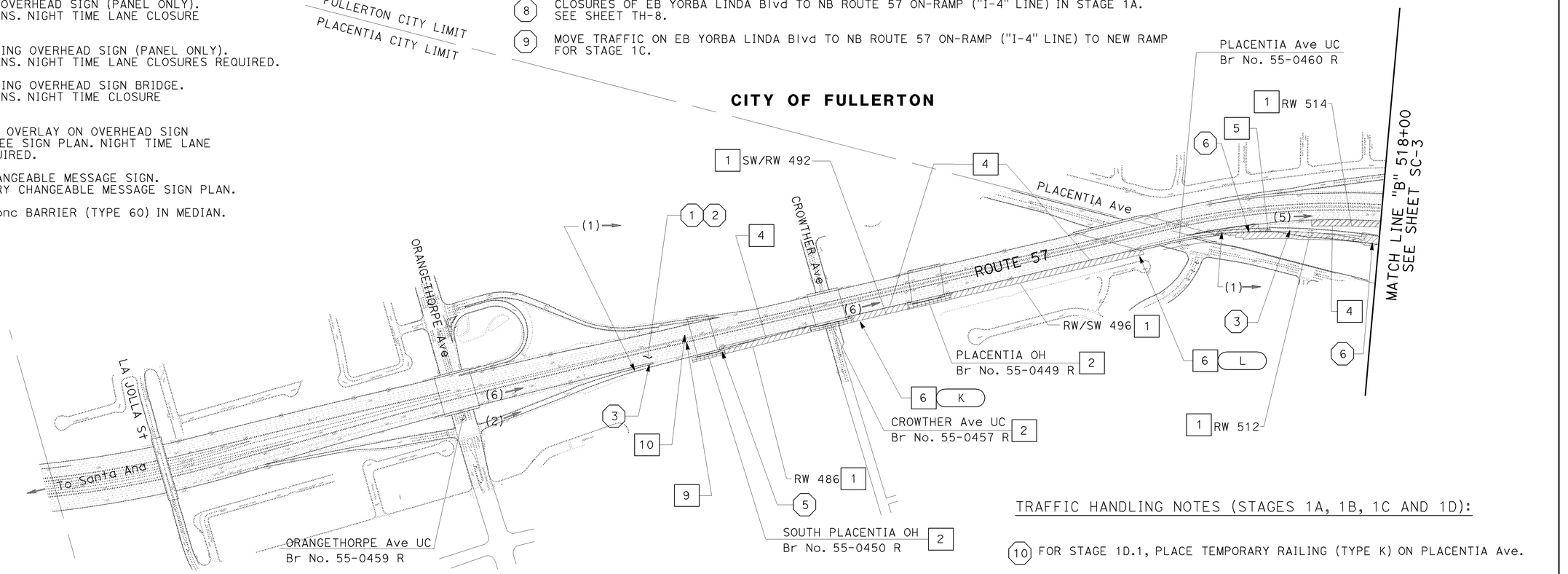

TRAFFIC HANDLING NOTES (STAGES 1A, 1B, 1C AND 1D):

(10) FOR STAGE 1D.1, PLACE TEMPORARY RAILING (TYPE K) ON PLACENTIA Ave.

(11) FOR STAGE 1D.2, ERECT FALSEWORK ON PLACENTIA Ave. PLACE TEMPORARY RAILING ON PLACENTIA Ave SHIFT TRAFFIC TO OUTSIDE LANE WIDTHS.

(12) SANTA FE Ave ACCESS LIMITED TO RIGHT TURNS DURING STAGE 1D.2.

STAGE 1A
NB OUTSIDE WIDENING AND RAMP IMPROVEMENTS

THIS PLAN ACCURATE FOR STAGE CONSTRUCTION AND TRAFFIC HANDLING WORK ONLY.

STAGE CONSTRUCTION INDEX
(STAGE 1A)

NO SCALE

SC-2

REVISED BY	DATE REVISED
EMILY FLAGG	7-15-09
SHERRY NOUR	12-14-09

CALCULATED-DESIGNED BY
CHECKED BY
SUPERVISOR

STATE OF CALIFORNIA - DEPARTMENT OF TRANSPORTATION
Caltrans
CONSULTANT FUNCTIONAL SUPERVISOR: ALAEDIN MOUBAYED

H:\pdata\10105878\Admin\submittals\2009-07-15 FINAL Electronic-Only Submittal\DGN\roadRLOT Files 2009-07-15 FINAL SUBMITTAL\c0F031ma002.dgn

LAST REVISION DATE PLOTTED => 16-DEC-2009
00-00-00 TIME PLOTTED => 10:16

BORDER LAST REVISED 4/11/2008 | RELATIVE BORDER SCALE IS IN INCHES 0 1 2 3 | USERNAME => trmariak | DGN FILE => c0F031ma002.dgn | CU 12220 | EA 0F0311

Dist	COUNTY	ROUTE	POST MILES TOTAL PROJECT	SHEET No.	TOTAL SHEETS
12	Ora	57	16.2/18.6	197	960

REGISTERED CIVIL ENGINEER 7/15/09 DATE

12-14-09
PLANS APPROVAL DATE

REGISTERED PROFESSIONAL ENGINEER EMILY L. FLAGG No. C68614 Exp. 09-30-11 CIVIL STATE OF CALIFORNIA

THE STATE OF CALIFORNIA OR ITS OFFICERS OR AGENTS SHALL NOT BE RESPONSIBLE FOR THE ACCURACY OR COMPLETENESS OF SCANNED COPIES OF THIS PLAN SHEET.

PBS&J
625 THE CITY DRIVE
ORANGE, CA 92868

OCTA
550 S. MAIN STREET
ORANGE, CA 92863

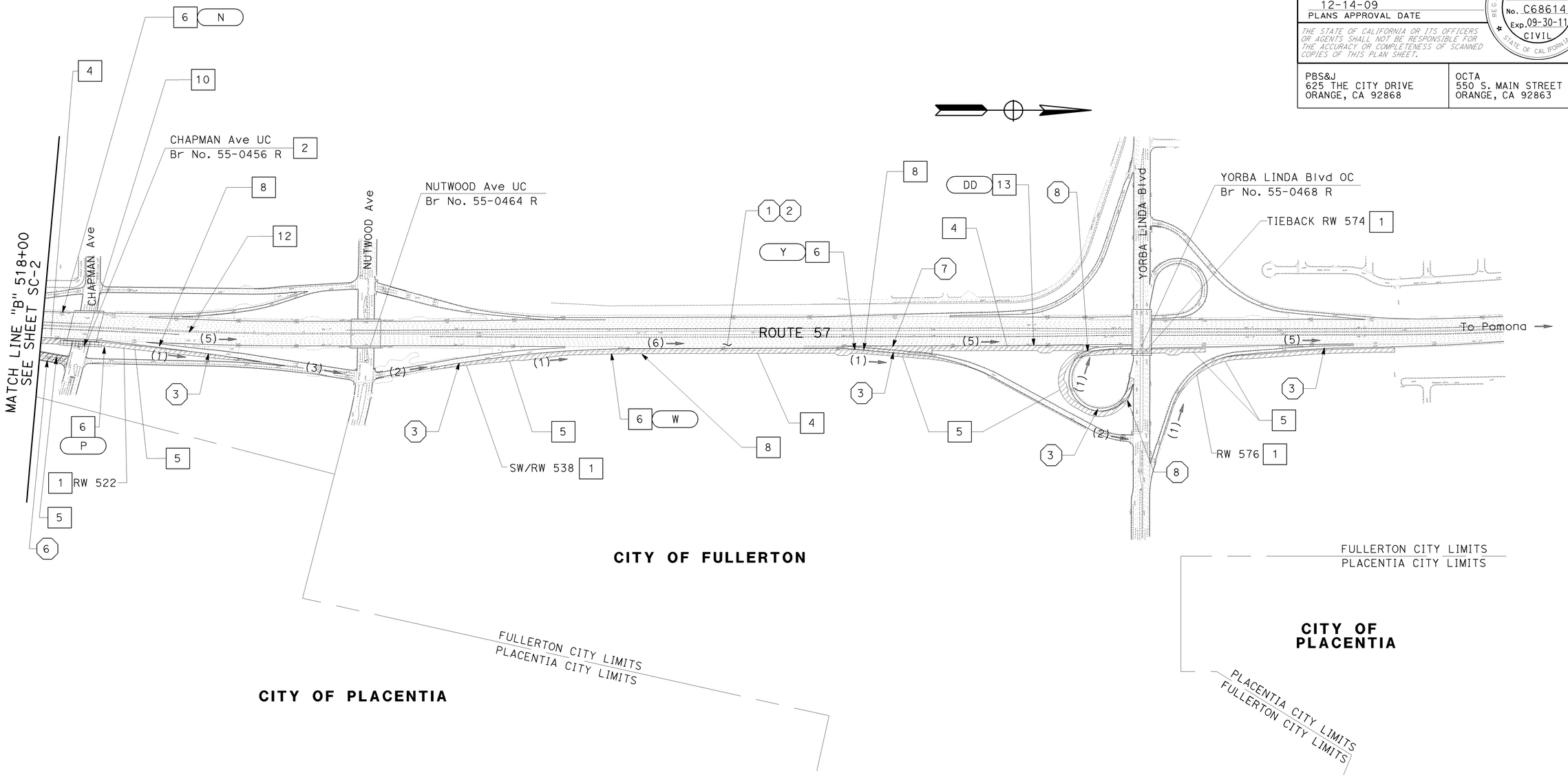

STAGE 1A
NB OUTSIDE WIDENING AND RAMP IMPROVEMENTS

STAGE CONSTRUCTION INDEX
(STAGE 1A)

NO SCALE

THIS PLAN ACCURATE FOR STAGE CONSTRUCTION AND TRAFFIC HANDLING WORK ONLY.

SC-3

STATE OF CALIFORNIA - DEPARTMENT OF TRANSPORTATION
Caltrans
CONSULTANT FUNCTIONAL SUPERVISOR: ALAEDIN MOUBAYED
CALCULATED-DESIGNED BY: EMILY FLAGG
CHECKED BY: SHERRY NOUR
REVISED BY
DATE REVISED

H:\pdata\10105878\Admin\submittals\2009-07-15 FINAL Electronic-Only Submittal\DGN\mariaRLOT Files\2009-07-15 FINAL SUBMITTAL\c0F031ma003.dgn

LAST REVISION 00-00-00
DATE PLOTTED => 16-DEC-2009
TIME PLOTTED => 10:17

BORDER LAST REVISED 4/11/2008
RELATIVE BORDER SCALE IS IN INCHES 0 1 2 3
USERNAME => trmariak
DGN FILE => c0F031ma003.dgn
CU 12220
EA 0F0311

Dist	COUNTY	ROUTE	POST MILES TOTAL PROJECT	SHEET No.	TOTAL SHEETS
12	Ora	57	16.2/18.6	198	960

REGISTERED CIVIL ENGINEER 7/15/09 DATE

12-14-09
PLANS APPROVAL DATE

REGISTERED PROFESSIONAL ENGINEER EMILY L. FLAGG No. C68614 Exp. 09-30-11 CIVIL STATE OF CALIFORNIA

THE STATE OF CALIFORNIA OR ITS OFFICERS OR AGENTS SHALL NOT BE RESPONSIBLE FOR THE ACCURACY OR COMPLETENESS OF SCANNED COPIES OF THIS PLAN SHEET.

PBS&J
625 THE CITY DRIVE
ORANGE, CA 92868

OCTA
550 S. MAIN STREET
ORANGE, CA 92863

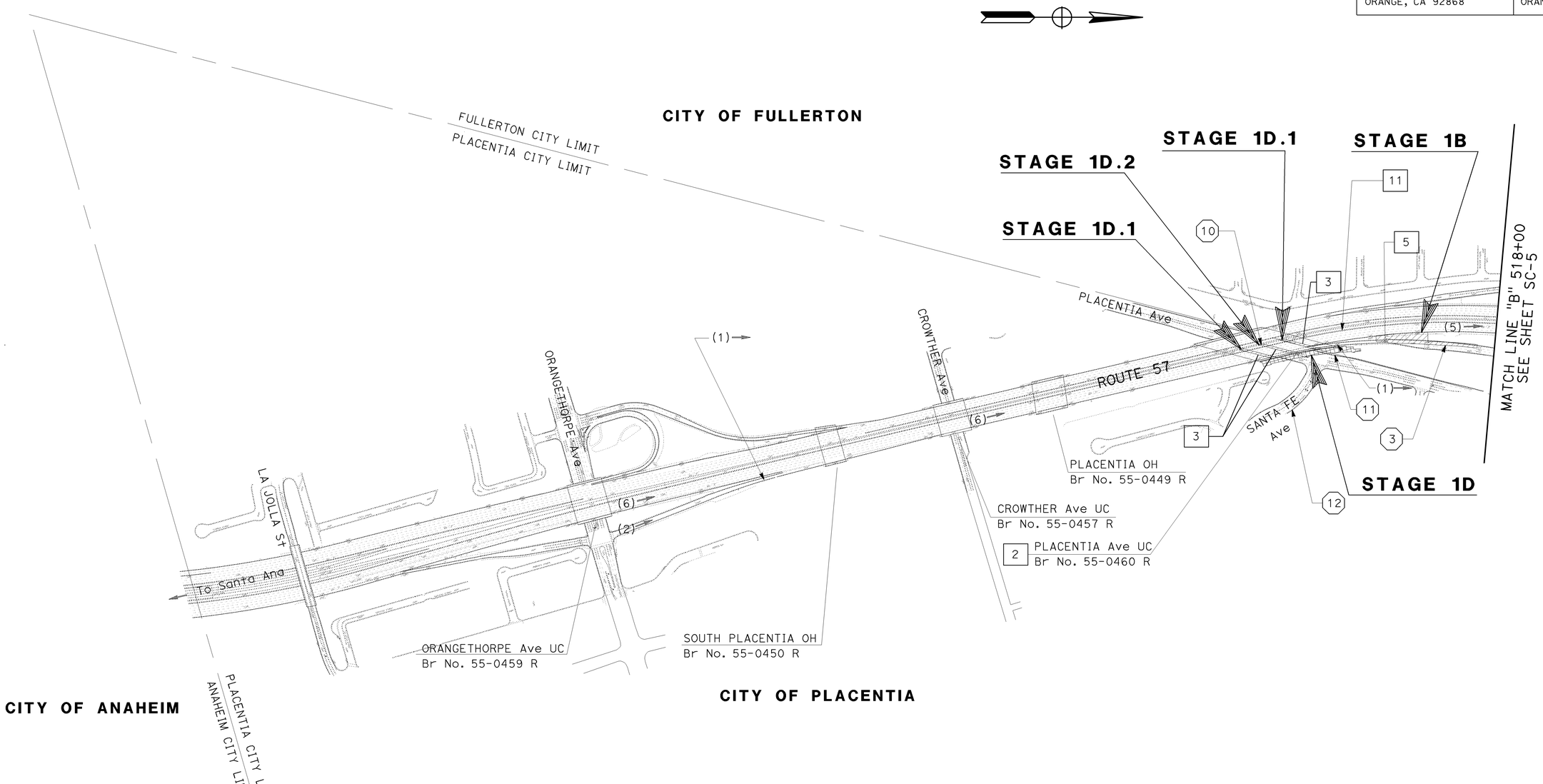

STAGES 1B, 1C AND 1D
NB OUTSIDE WIDENING AND RAMP IMPROVEMENTS

STAGE CONSTRUCTION INDEX
(STAGES 1B, 1C AND 1D)

NO SCALE

THIS PLAN ACCURATE FOR STAGE CONSTRUCTION AND TRAFFIC HANDLING WORK ONLY.

SC-4

STATE OF CALIFORNIA - DEPARTMENT OF TRANSPORTATION
Caltrans
CONSULTANT FUNCTIONAL SUPERVISOR: ALAEDIN MOUBAYED
CALCULATED-DESIGNED BY: EMILY FLAGG
CHECKED BY: SHERRY NOUR
REVISED BY
DATE REVISED

H:\pdata\10105878\Admin\submittals\2009-07-15 FINAL Electronic-Only Submittal\DGN\mariaRLOT Files\2009-07-15 FINAL SUBMITTAL\c0F031ma004.dgn

LAST REVISION 00-00-00
DATE PLOTTED => 16-DEC-2009
TIME PLOTTED => 10:17

Dist	COUNTY	ROUTE	POST MILES TOTAL PROJECT	SHEET No.	TOTAL SHEETS
12	Ora	57	16.2/18.6	199	960

REGISTERED CIVIL ENGINEER — 7/15/09 DATE

EMILY L. FLAGG No. C68614 Exp.09-30-11 CIVIL — REGISTERED PROFESSIONAL ENGINEER — STATE OF CALIFORNIA

12-14-09
PLANS APPROVAL DATE

THE STATE OF CALIFORNIA OR ITS OFFICERS OR AGENTS SHALL NOT BE RESPONSIBLE FOR THE ACCURACY OR COMPLETENESS OF SCANNED COPIES OF THIS PLAN SHEET.

PBS&J
625 THE CITY DRIVE
ORANGE, CA 92868

OCTA
550 S. MAIN STREET
ORANGE, CA 92863

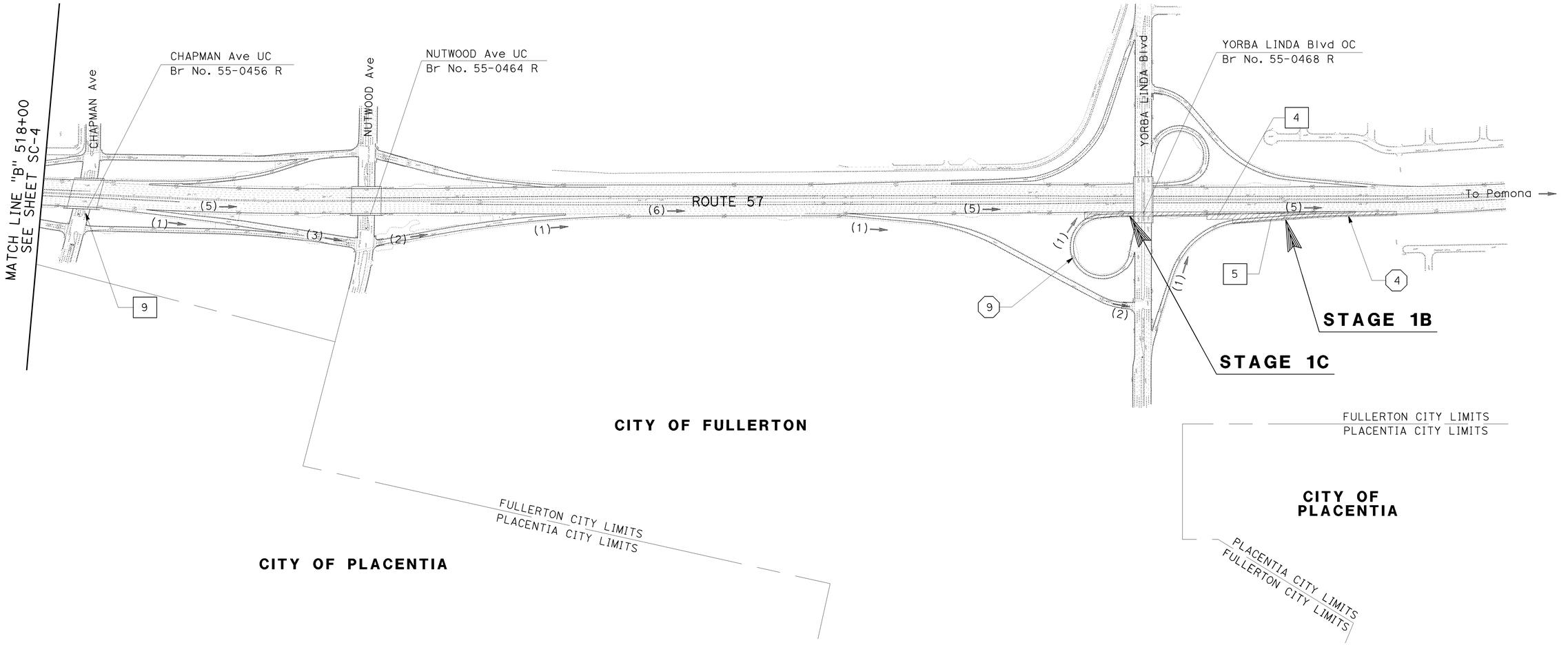

STAGES 1B, 1C AND 1D
NB OUTSIDE WIDENING AND RAMP IMPROVEMENTS

THIS PLAN ACCURATE FOR STAGE CONSTRUCTION AND TRAFFIC HANDLING WORK ONLY.

STAGE CONSTRUCTION INDEX
(STAGES 1B, 1C AND 1D)

NO SCALE

SC-5

STATE OF CALIFORNIA - DEPARTMENT OF TRANSPORTATION — Caltrans
CONSULTANT FUNCTIONAL SUPERVISOR: ALAEDIN MOUBAYED
CALCULATED-DESIGNED BY: EMILY FLAGG
CHECKED BY: SHERRY NOUR
REVISED BY | DATE REVISED

H:\pdata\10105878\Admin\submittals\2009-07-15 FINAL Electronic-Only Submittal\DGN\radial PLOT File86-20099 5 FINAL SUBMITTAL\c0F031ma005.dgn

LAST REVISION | DATE PLOTTED => 16-DEC-2009 | TIME PLOTTED => 10:17
00-00-00

BORDER LAST REVISED 4/11/2008 | RELATIVE BORDER SCALE IS IN INCHES 0 1 2 3 | USERNAME => trmariak | DGN FILE => c0F031ma005.dgn | CU 12220 | EA 0F0311

Dist	COUNTY	ROUTE	POST MILES TOTAL PROJECT	SHEET No.	TOTAL SHEETS
12	Ora	57	16.2/18.6	200	960

REGISTERED CIVIL ENGINEER — DATE 7/15/09

12-14-09
PLANS APPROVAL DATE

REGISTERED PROFESSIONAL ENGINEER — EMILY L. FLAGG — No. C68614 — Exp. 09-30-11 — CIVIL — STATE OF CALIFORNIA

THE STATE OF CALIFORNIA OR ITS OFFICERS OR AGENTS SHALL NOT BE RESPONSIBLE FOR THE ACCURACY OR COMPLETENESS OF SCANNED COPIES OF THIS PLAN SHEET.

PBS&J
625 THE CITY DRIVE
ORANGE, CA 92868

OCTA
550 S. MAIN STREET
ORANGE, CA 92863

TRAFFIC HANDLING NOTES (STAGES 2A AND 2B):

1. RESTRIPE EXISTING NB ROUTE 57. REMOVE HOV BUFFER AND SHIFT TRAFFIC TOWARD MEDIAN RAIL.
2. PLACE TEMPORARY RAILING (TYPE K) WITH TEMPORARY TRAFFIC SCREEN.
3. RESTRIPE RAMP FOR TEMPORARY TIE-IN TO NB ROUTE 57.
4. ORANGETHORPE Ave ON-RAMP ("V" LINE) REDUCED TO ONE LANE FOR CONSTRUCTION OF RW476 IN STAGE 2A.
5. CLOSURES OF NB ROUTE 57 TO ORANGETHORPE Ave OFF-RAMP ("T" LINE) IN STAGE 2A. SEE SHEET TH-1.
6. UPON COMPLETION OF RW476 BEGIN STAGE 2B WORK AREA IN CONJUCTION WITH REMAINING WORK ON MAINLINE SR-57 IN STAGE 2A. ORANGETHORPE Ave ON-RAMP ("V" LINE) RETURNED TO TWO LANES.
7. SHIFT LANES TOWARD OUTSIDE. PLACE TEMPORARY RAILING (TYPE K) WITH TEMPORARY TRAFFIC SCREEN WITHIN NEW HOV LANE.

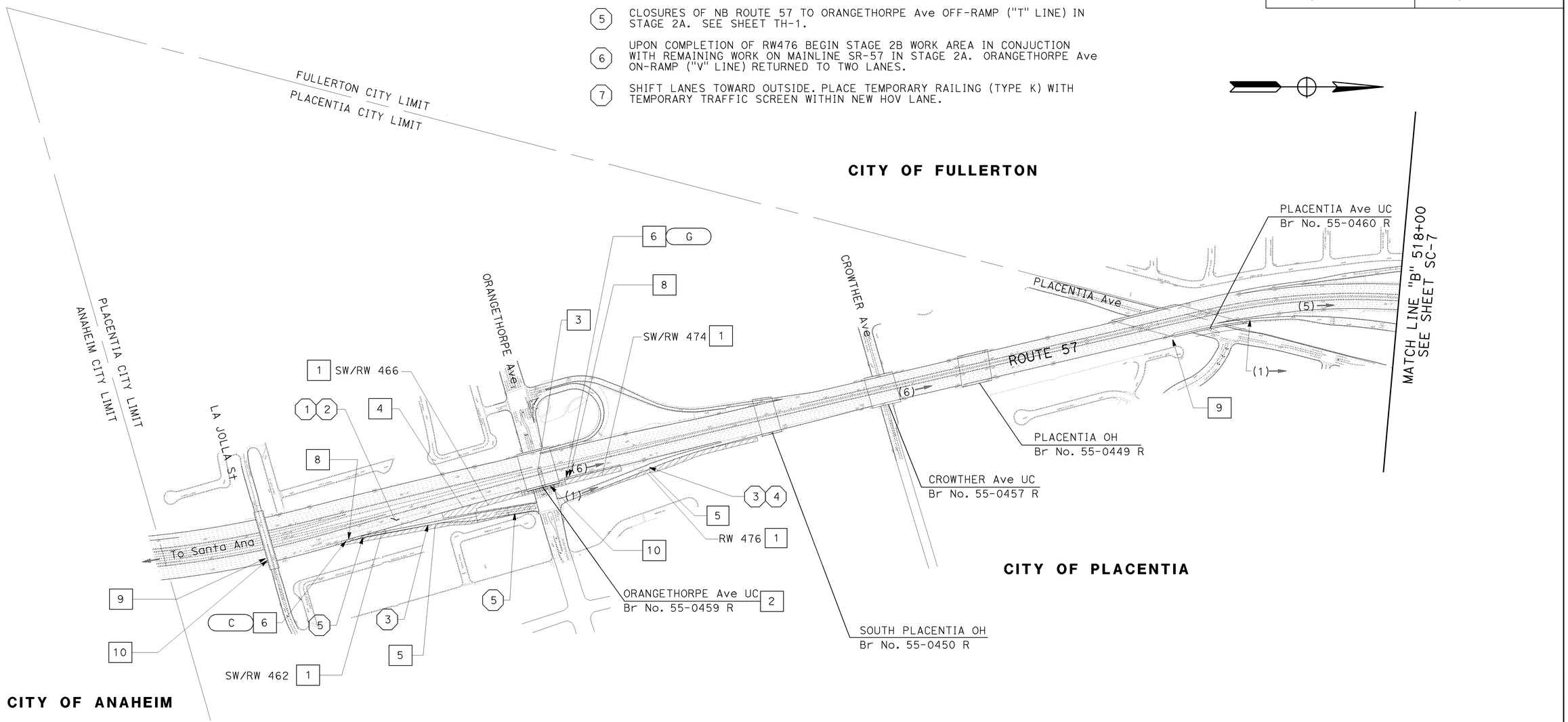

STAGE 2A
NB OUTSIDE WIDENING AND RAMP IMPROVEMENTS

STAGE CONSTRUCTION INDEX
(STAGE 2A)

NO SCALE

THIS PLAN ACCURATE FOR STAGE CONSTRUCTION AND TRAFFIC HANDLING WORK ONLY.

SC-6

STATE OF CALIFORNIA - DEPARTMENT OF TRANSPORTATION | CONSULTANT FUNCTIONAL SUPERVISOR: ALAEDIN MOUBAYED | CALCULATED-DESIGNED BY: EMILY FLAGG | CHECKED BY: SHERRY NOUR | REVISED BY | DATE REVISED | Caltrans

LAST REVISION 00-00-00 | DATE PLOTTED => 16-DEC-2009 | TIME PLOTTED => 10:17

H:\pdata\10105878\Admin\submittals\2009-07-15 FINAL Electronic-Only Submittal\DGN\radial\LOT File86 20090720090715 FINAL SUBMITTAL\c0F031ma006.dgn

BORDER LAST REVISED 4/11/2008 | RELATIVE BORDER SCALE IS IN INCHES 0 1 2 3 | USERNAME => trmariak | DGN FILE => c0F031ma006.dgn | CU 12220 | EA 0F0311