DIST	COUNTY	ROUTE	POST MILES TOTAL PROJECT	SHEET No	TOTAL SHEETS
12	Ora	57	16.2/18.6	401	960

LICENSED LANDSCAPE ARCHITECT

12-14-09
PLANS APPROVAL DATE

The State of California or its officers or agents shall not be responsible for the accuracy or completeness of electronic copies of this plan sheet.

LICENSED LANDSCAPE ARCHITECT
CATHY L. JOHNSON
No. 4545
Signature
01-31-10
Renewal Date
06-17-09
Date
STATE OF CALIFORNIA

OCTA
550 S MAIN STREET
ORANGE, CA 92868

RBF CONSULTING
14725 ALTON PKWY
IRVINE, CA 92618

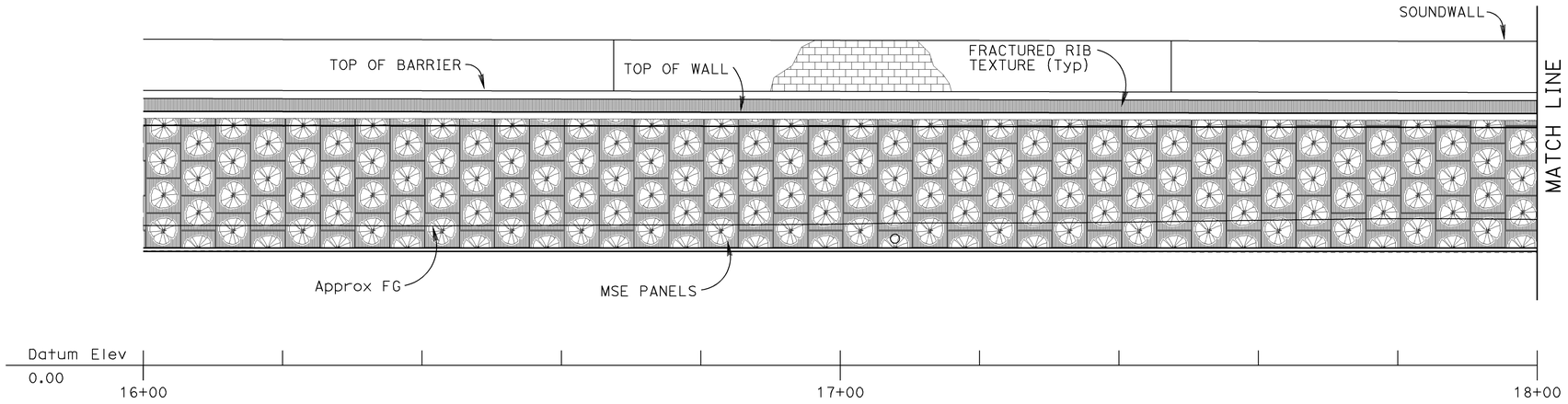

RW No. 496 DEVELOPED ELEVATION (SEGMENT 4)

SCALE: 1" = 10'

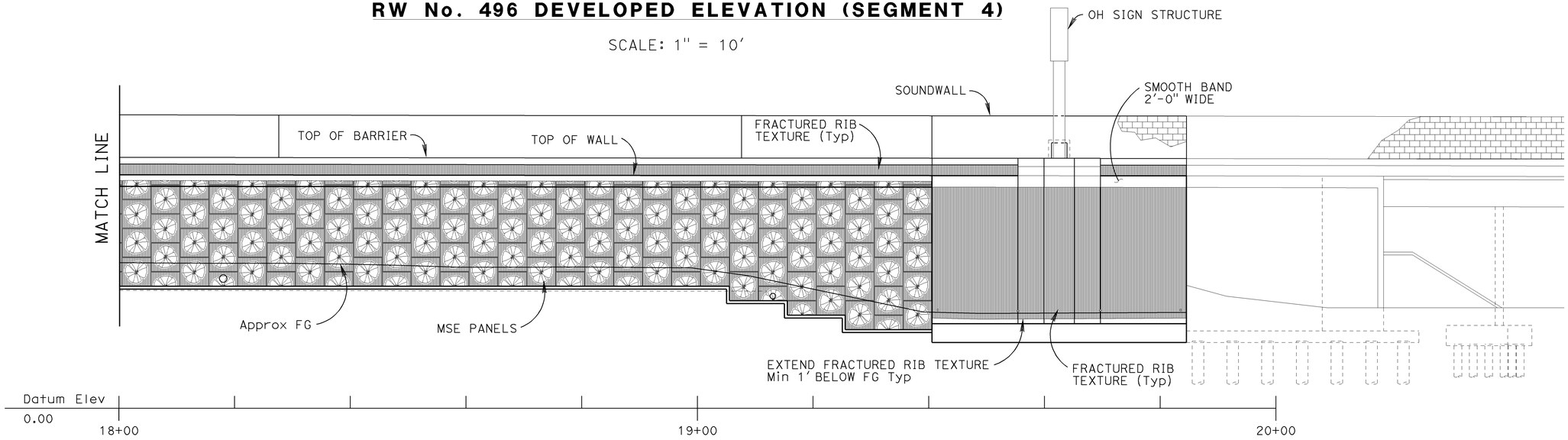

RW No. 496 DEVELOPED ELEVATION (SEGMENT 5)

SCALE: 1" = 10'

ARCHITECTURAL TREATMENT

NOTE:
THE CONTRACTOR SHALL VERIFY ALL CONTROLLING FIELD DIMENSIONS BEFORE ORDERING OR FABRICATING ANY MATERIAL.

DESIGN OVERSIGHT Jon Hamaguchi
6-24-09
SIGN OFF DATE

	BY	CHECKED
DESIGN	Cathy Johnson	Steve Huff
DETAILS	Cathy Johnson	Steve Huff
QUANTITIES	Chad Harden	Scott McCauley

PREPARED FOR THE STATE OF CALIFORNIA DEPARTMENT OF TRANSPORTATION

Chad W. Harden
PROJECT ENGINEER

BRIDGE NO. 55E0081
POST MILE 16.3

RETAINING WALL No. 496
ARCHITECTURAL PANEL LAYOUT No. 2

DESIGN DETAIL SHEET (ENGLISH) (REV. 2/25/05)

ORIGINAL SCALE IN INCHES FOR REDUCED PLANS 0 1 2 3

CU 12
EA 0F0311

DISREGARD PRINTS BEARING EARLIER REVISION DATES

REVISION DATES (PRELIMINARY STAGE ONLY) 2/13/09 4/6/09 6/17/09

SHEET 22 OF 33

FILE => 55-496-u-miscdt17.dgn

USERNAME => trmikesl DATE PLOTTED => 17-DEC-2009 TIME PLOTTED => 06:41

NOTES:

1. IDENTICAL FLOWER IMAGES, SCALE AND SPACING SHALL BE USED FOR FLOWER PATTERN AND MSE WALL PANELS.

2. WITHIN A VERTICAL COLUMN, FLOWER IMAGES SHALL ALTERNATE BETWEEN FLOWERS 'A' AND 'B'.
VERTICAL COLUMNS SHALL BE OFFSET 30" FROM ADJACENT COLUMNS.

3. WHERE PLACED ON WALLS BOUNDED BY CONCRETE BARRIERS, FINISHED GRADE OR TOP OF WALL, FLOWER PATTERN SHALL BE CONTINUED WITHOUT CONCERN FOR PARTIAL FLOWER IMAGES, EXCEPT AS NOTED.

4. REFER TO STRUCTURAL DETAILS FOR WIDTH OF SMOOTH BAND TO BE APPLIED AT EDGES OF STRUCTURES.

5. WHERE THE FLOWER PATTERN WILL BE USED ADJACENT TO A HORIZONTAL LIMIT SUCH AS A BRIDGE ABUTMENT, ADJOINING MSE WALL OR OVERHEAD SIGN STRUCTURE SUPPORT, FLOWER PATTERN SHALL BE DISCONTINUED FROM A SECTION NOT LESS THAN 30" AND NOT GREATER THAN 60" WIDE FROM THE HORIZONTAL LIMIT TO AVOID TRUNCATION OF FLOWER IMAGES.
FRACTURED RIB TEXTURE SHALL BE INSERTED IN THE RESULTING GAP TO CREATE A CONTINUOUS BUFFER BETWEEN PATTERN AREAS.

6. THE NEAREST COLUMN OF FLOWER IMAGES (FLOWER PATTERN) SHALL BE OFFSET VERTICALLY 30" FROM THE PANELS.

7. EXTEND FLOWER PATTERN OR FRACTURED RIB TEXTURE MIN 1'-0" BELOW FG.

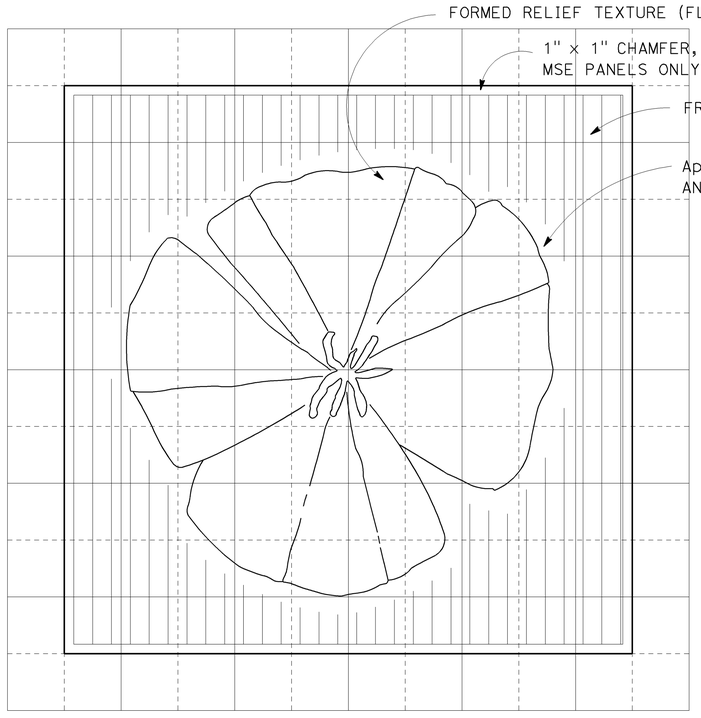

ARCHITECTURAL SURFACE (TEXTURED CONCRETE) FOR MSE PANEL

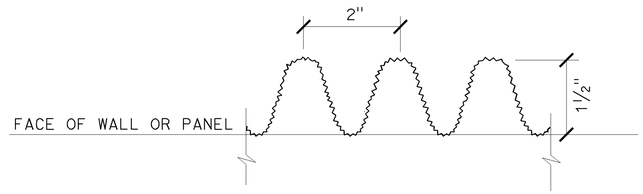

FRACTURED RIB TEXTURE (PROJECTING)

DIST	COUNTY	ROUTE	POST MILES TOTAL PROJECT	SHEET No	TOTAL SHEETS
12	Ora	57	16.2/28.6	402	960

LICENSED LANDSCAPE ARCHITECT

12-14-09
PLANS APPROVAL DATE

The State of California or its officers or agents shall not be responsible for the accuracy or completeness of electronic copies of this plan sheet.

LICENSED LANDSCAPE ARCHITECT — CATHY L. JOHNSON No. 4547 — 01-31-10 Renewal Date — 06-17-09 Date — STATE OF CALIFORNIA

OCTA
550 S MAIN STREET
ORANGE, CA 92868

RBF CONSULTING
14725 ALTON PKWY
IRVINE, CA 92618

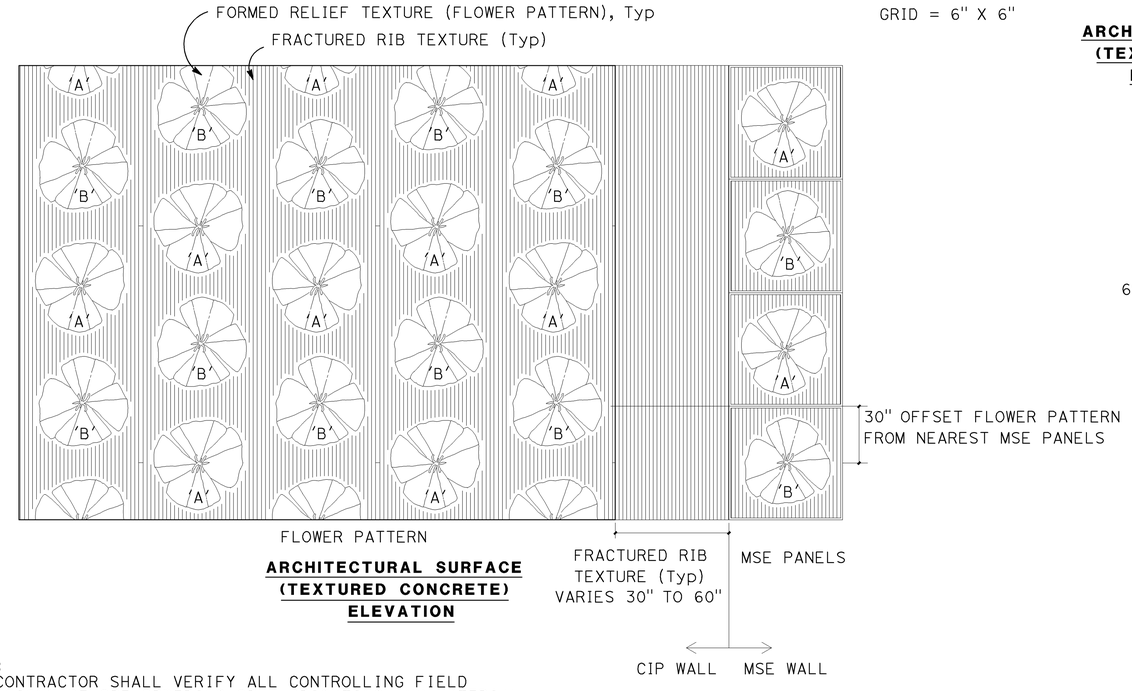

ARCHITECTURAL SURFACE (TEXTURED CONCRETE) ELEVATION

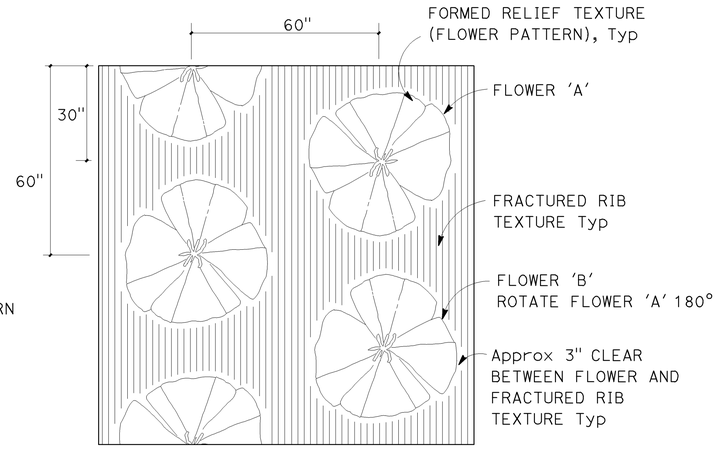

ARCHITECTURAL SURFACE (TEXTURED CONCRETE) PATTERN

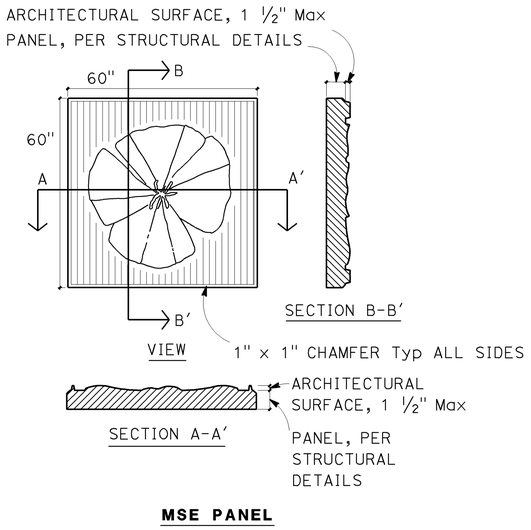

MSE PANEL

NOTE:
THE CONTRACTOR SHALL VERIFY ALL CONTROLLING FIELD DIMENSIONS BEFORE ORDERING OR FABRICATING ANY MATERIAL.

Jon Hamaguchi
DESIGN OVERSIGHT
6-24-09
SIGN OFF DATE

	BY	CHECKED
DESIGN	Cathy Johnson	Steve Huff
DETAILS	Cathy Johnson	Steve Huff
QUANTITIES	Chad Harden	Scott McCauley

PREPARED FOR THE STATE OF CALIFORNIA DEPARTMENT OF TRANSPORTATION

Chad W. Harden
PROJECT ENGINEER

BRIDGE NO.	55E0081
POST MILE	16.3

RETAINING WALL No. 496
ARCHITECTURAL PANEL DETAILS

DESIGN DETAIL SHEET (ENGLISH) (REV. 2/25/05)

ORIGINAL SCALE IN INCHES FOR REDUCED PLANS 0 1 2 3

CU 12
EA 0F0311

DISREGARD PRINTS BEARING EARLIER REVISION DATES →

REVISION DATES (PRELIMINARY STAGE ONLY): 2/13/09 | 5/6/09 | 6/17/09

SHEET 23 OF 33

FILE => 55-496-u-miscdt18.dgn

USERNAME => trrichf DATE PLOTTED => 16-DEC-2009 TIME PLOTTED => 15:04

BENCHMARKS:

Vertical Datum NAVD 88

Designation: 1L-54-82 Elev = 153.171
Described by OCS 2002 - Found 3¾" OCS Aluminum Benchmark Disk Stamped "1L-54-82", set in the Top of a 6 in. by 6 in. Concrete Post. Monument is located along the Westerly Levee of the Santa Ana River, 0.25 Miles Northerly along Levee from the Centerline of Orangewood Avenue, 200 ft. Northeasterly of the Easterly Leg of the Anaheim Angels 200 ft. tall sign, 69 ft. Westerly of the Centerline of the Bike Trail and 1.5 ft. Westerly of a Steel OCS Witness Post. Monument is set 0.3 below the Ground.

Designation: 2G-25-70 Elev = 275.872
Described by OCS 2003 - Found 3¾" OCS Aluminum Benchmark Disk Stamped "2G-25-70", set in the Southeasterly Corner of a 4 ft by 6 ft Concrete Catch Basin. Monument is Located in the Northwesterly Corner of the Intersection of Yorba Linda Boulevard and Deerpark Drive, 75 ft Westerly of the Centerline of Deerpark and 46 ft Northerly of the Centerline of Yorba Linda. Monument is set Level with the Sidewalk.

DIST	COUNTY	ROUTE	POST MILES TOTAL PROJECT	SHEET No	TOTAL SHEETS
12	Ora	57	16.2/28.6	403	960

Lino Cheang
REGISTERED ENGINEER — 06/17/09 DATE

REGISTERED PROFESSIONAL ENGINEER — L. CHEANG NO. GE 2345 EXP. 9-30-11 — GEOTECHNICAL — STATE OF CALIFORNIA

12-14-09
PLANS APPROVAL DATE

The State of California or its officers or agents shall not be responsible for the accuracy or completeness of electronic copies of this plan sheet.

ORANGE COUNTY TRANSPORTATION AUTHORITY
550 S. MAIN STREET
ORANGE, CA 92863-1584

EARTH MECHANICS, INC.
17660 NEWHOPE STREET, SUITE E
FOUNTAIN VALLEY, CA 92708

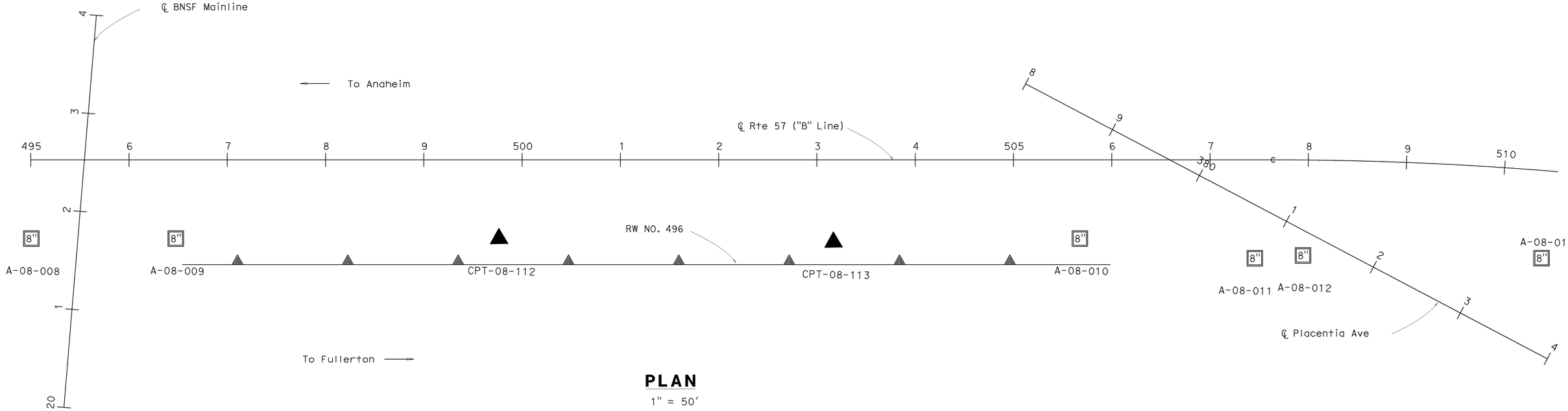

PLAN
1" = 50'

Jon Hamaguchi — DESIGN OVERSIGHT — 6-24-09 SIGN OFF DATE	DRAWN BY: J.Fang CHECKED BY: L.Cheang	FIELD INVESTIGATION BY: R.Jie	PREPARED FOR THE STATE OF CALIFORNIA DEPARTMENT OF TRANSPORTATION	C. Yang — PROJECT ENGINEER	BRIDGE NO. 55E0083 POST MILES 16.2/18.6	RETAINING WALL NO. 496 LOG OF TEST BORINGS NO. 1

DESIGN GENERAL PLAN SHEET (ENGLISH) (REV. 2/25/05)

ORIGINAL SCALE IN INCHES FOR REDUCED PLANS 0 1 2 3

CU 12
EA 0F0311

DISREGARD PRINTS BEARING EARLIER REVISION DATES →

REVISION DATES (PRELIMINARY STAGE ONLY): 4/30/09

SHEET 24 OF 33

FILE => 55-496-z-ltb01.dgn

USERNAME = trrichf DATE PLOTTED => 16-DEC-2009 TIME PLOTTED => 15:05

DIST	COUNTY	ROUTE	POST MILES TOTAL PROJECT	SHEET No	TOTAL SHEETS
12	Ora	57	16.2/28.6	404	960

Lino Cheang
REGISTERED ENGINEER — 06/17/09 DATE

12-14-09
PLANS APPROVAL DATE

REGISTERED PROFESSIONAL ENGINEER — L. CHEANG NO. GE 2345 EXP. 9-30-11 — GEOTECHNICAL — STATE OF CALIFORNIA

The State of California or its officers or agents shall not be responsible for the accuracy or completeness of electronic copies of this plan sheet.

ORANGE COUNTY TRANSPORTATION AUTHORITY
550 S. MAIN STREET
ORANGE, CA 92863-1584

EARTH MECHANICS, INC.
17660 NEWHOPE STREET, SUITE E
FOUNTAIN VALLEY, CA 92708

FOR PLAN VIEW SEE "RETAINING WALL NO. 496, LOG OF TEST BORINGS NO. 1"

NOTES:

(1) This LOTB sheet was prepared in accordance with the Caltrans Soil and Rock Logging, Classification and Presentation Manual (June 2007)

(2) 2.4" samples were taken using a California Modified Sampler.

(3) An automatic trip hammer system consisting of a hammer weight of 140 lbs falling a distance of 30" was used to advance the drive sampler.

(4) Conversion factor from 2.4" Modified California Ring Sampler blowcounts to Standard Penetration Test (SPT) blowcounts is 0.5.

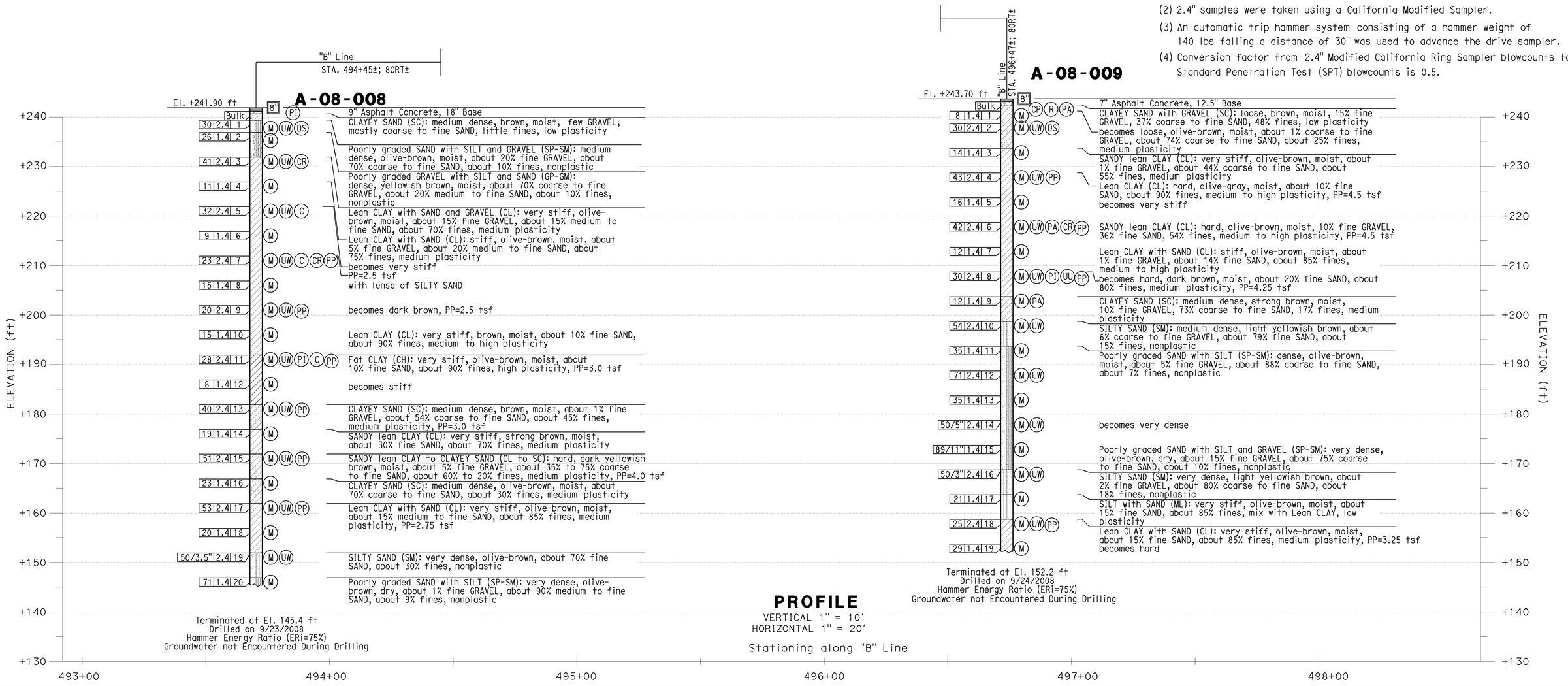

PROFILE
VERTICAL 1" = 10'
HORIZONTAL 1" = 20'

Jon Hanaguchi
DESIGN OVERSIGHT — Jon Hanaguchi

6-24-09
SIGN OFF DATE

DRAWN BY: J.Fang
CHECKED BY: L.Cheang

FIELD INVESTIGATION BY:
R.Jie

PREPARED FOR THE
STATE OF CALIFORNIA
DEPARTMENT OF TRANSPORTATION

C. Yang
PROJECT ENGINEER

BRIDGE NO. 55E0083
POST MILES 16.2/18.6

RETAINING WALL NO. 496
LOG OF TEST BORINGS NO. 2

DESIGN GENERAL PLAN SHEET (ENGLISH) (REV. 2/25/05)

ORIGINAL SCALE IN INCHES FOR REDUCED PLANS 0 1 2 3

CU 12
EA 0F0311

DISREGARD PRINTS BEARING EARLIER REVISION DATES →

REVISION DATES (PRELIMINARY STAGE ONLY): 4/30/09

SHEET 25 OF 33

FILE => 55-496-z-ltb02.dgn

USERNAME => ltfright DATE PLOTTED => 16-DEC-2009 TIME PLOTTED => 15:05

DIST	COUNTY	ROUTE	POST MILES TOTAL PROJECT	SHEET No	TOTAL SHEETS
12	Ora	57	16.2/28.6	405	960

Lino Cheang
REGISTERED ENGINEER — 06/17/09 DATE

12-14-09
PLANS APPROVAL DATE

REGISTERED PROFESSIONAL ENGINEER — L. CHEANG NO. GE 2345 EXP. 9-30-11 — GEOTECHNICAL — STATE OF CALIFORNIA

The State of California or its officers or agents shall not be responsible for the accuracy or completeness of electronic copies of this plan sheet.

ORANGE COUNTY TRANSPORTATION AUTHORITY
550 S. MAIN STREET
ORANGE, CA 92863-1584

EARTH MECHANICS, INC.
17660 NEWHOPE STREET, SUITE E
FOUNTAIN VALLEY, CA 92708

NOTES:

(1) This LOTB sheet was prepared in accordance with the Caltrans Soil and Rock Logging, Classification and Presentation Manual (June 2007)
(2) 2.4" samples were taken using a California Modified Sampler.
(3) An automatic trip hammer system consisting of a hammer weight of 140 lbs falling a distance of 30" was used to advance the drive sampler.
(4) Conversion factor from 2.4" Modified California Ring Sampler blowcounts to Standard Penetration Test (SPT) blowcounts is 0.5.

FOR PLAN VIEW SEE "RETAINING WALL NO. 496, LOG OF TEST BORINGS NO. 1"

PLAN

1" = 50'

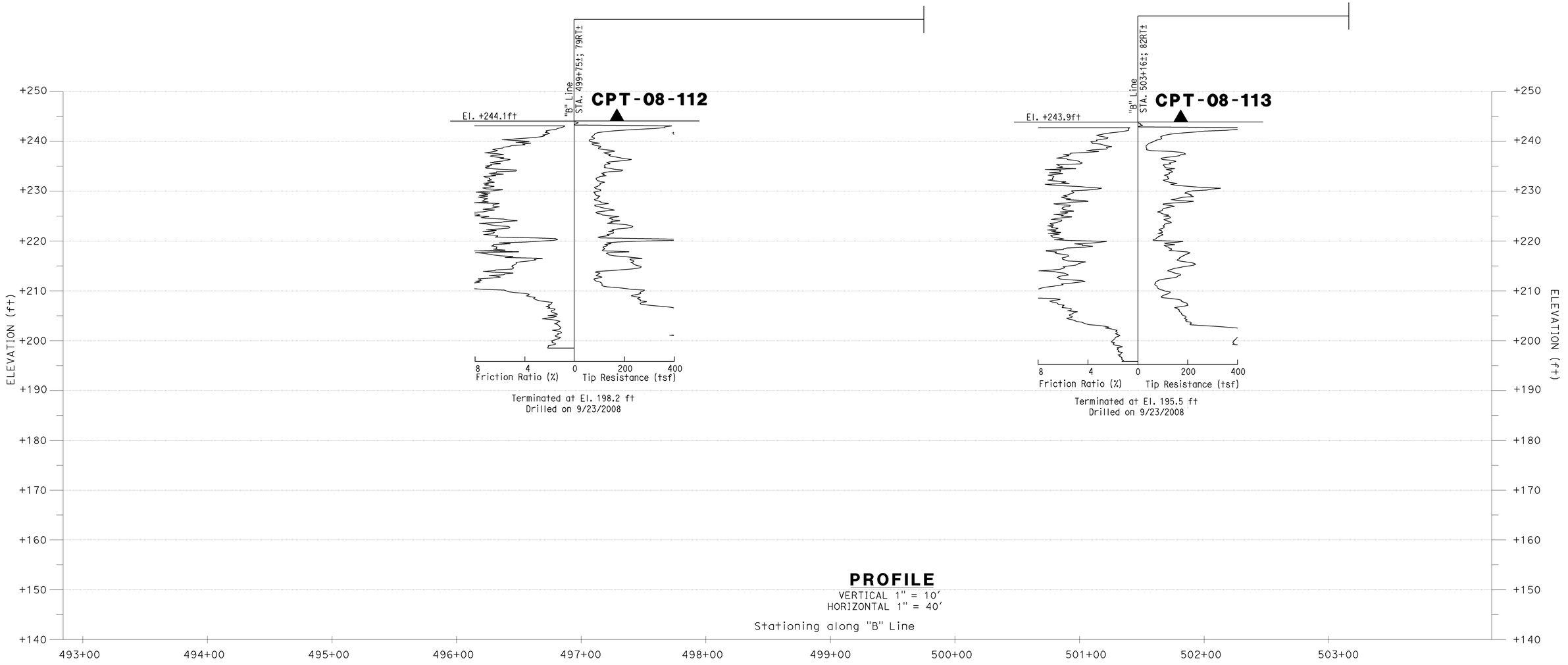

PROFILE

VERTICAL 1" = 10'
HORIZONTAL 1" = 40'

Stationing along "B" Line

DESIGN OVERSIGHT Jon Hamaguchi — 6-24-09 SIGN OFF DATE	DRAWN BY: J.Fang CHECKED BY: L.Cheang	FIELD INVESTIGATION BY: R.Jie	PREPARED FOR THE STATE OF CALIFORNIA DEPARTMENT OF TRANSPORTATION	C.Yang PROJECT ENGINEER	BRIDGE NO. 55E0083 POST MILES 16.2/18.6	RETAINING WALL NO. 496 LOG OF TEST BORINGS NO. 3

DESIGN GENERAL PLAN SHEET (ENGLISH) (REV. 2/25/05)

ORIGINAL SCALE IN INCHES FOR REDUCED PLANS 0 1 2 3

CU 12
EA 0F0311

DISREGARD PRINTS BEARING EARLIER REVISION DATES →

REVISION DATES (PRELIMINARY STAGE ONLY): 4/30/09

SHEET 26 OF 33

USERNAME => trr1cht DATE PLOTTED => 16-DEC-2009 TIME PLOTTED => 15:05

FILE => 55-496-z-ltb03.dgn

DIST	COUNTY	ROUTE	POST MILES TOTAL PROJECT	SHEET No	TOTAL SHEETS
12	Ora	57	16.2/28.6	406	960

Lino Cheang
REGISTERED ENGINEER — 06/17/09 DATE

12-14-09
PLANS APPROVAL DATE

REGISTERED PROFESSIONAL ENGINEER — L. CHEANG — NO. GE 2345 — EXP. 9-30-11 — GEOTECHNICAL — STATE OF CALIFORNIA

The State of California or its officers or agents shall not be responsible for the accuracy or completeness of electronic copies of this plan sheet.

ORANGE COUNTY TRANSPORTATION AUTHORITY
550 S. MAIN STREET
ORANGE, CA 92863-1584

EARTH MECHANICS, INC.
17660 NEWHOPE STREET, SUITE E
FOUNTAIN VALLEY, CA 92708

FOR PLAN VIEW SEE "RETAINING WALL NO. 496, LOG OF TEST BORINGS NO. 1"

NOTES:

(1) This LOTB sheet was prepared in accordance with the Caltrans Soil and Rock Logging, Classification and Presentation Manual (June 2007)
(2) 2.4" samples were taken using a California Modified Sampler.
(3) An automatic trip hammer system consisting of a hammer weight of 140 lbs falling a distance of 30" was used to advance the drive sampler.
(4) Conversion factor from 2.4" Modified California Ring Sampler blowcounts to Standard Penetration Test (SPT) blowcounts is 0.5.

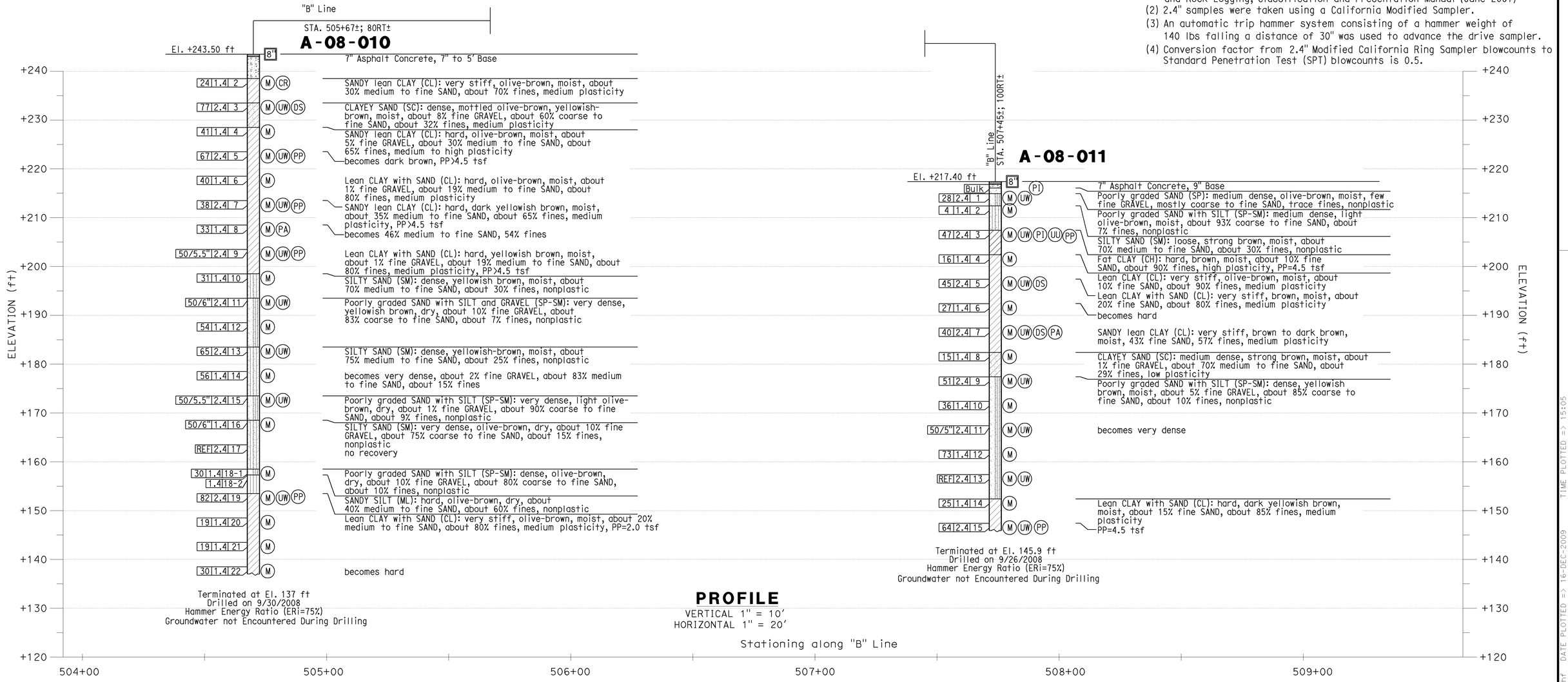

PROFILE

VERTICAL 1" = 10'
HORIZONTAL 1" = 20'

Jon Hamaguchi
DESIGN OVERSIGHT — Jon Hamaguchi
6-24-09
SIGN OFF DATE

DRAWN BY: J.Fang
CHECKED BY: L.Cheang

FIELD INVESTIGATION BY: R.Jie

PREPARED FOR THE STATE OF CALIFORNIA DEPARTMENT OF TRANSPORTATION

C. Yang
PROJECT ENGINEER

BRIDGE NO. 55E0083
POST MILES 16.2/18.6

RETAINING WALL NO. 496
LOG OF TEST BORINGS NO. 4

DESIGN GENERAL PLAN SHEET (ENGLISH) (REV. 2/25/05)

ORIGINAL SCALE IN INCHES FOR REDUCED PLANS 0 1 2 3

CU 12
EA 0F0311

DISREGARD PRINTS BEARING EARLIER REVISION DATES →

REVISION DATES (PRELIMINARY STAGE ONLY): 6/30/09

SHEET 27 OF 33

FILE => 55-496-z-ltb04.dgn

USERNAME => trright DATE PLOTTED => 16-DEC-2009 TIME PLOTTED => 15:05

DIST	COUNTY	ROUTE	POST MILES TOTAL PROJECT	SHEET No	TOTAL SHEETS
12	Ora	57	16.2/28.6	407	960

Lino Cheang — 06/17/09
REGISTERED ENGINEER — DATE

L. CHEANG NO. GE 2345 EXP. 9-30-11 REGISTERED PROFESSIONAL ENGINEER GEOTECHNICAL STATE OF CALIFORNIA

12-14-09
PLANS APPROVAL DATE

The State of California or its officers or agents shall not be responsible for the accuracy or completeness of electronic copies of this plan sheet.

ORANGE COUNTY TRANSPORTATION AUTHORITY
550 S. MAIN STREET
ORANGE, CA 92863-1584

EARTH MECHANICS, INC.
17660 NEWHOPE STREET, SUITE E
FOUNTAIN VALLEY, CA 92708

FOR PLAN VIEW SEE "RETAINING WALL NO. 496, LOG OF TEST BORINGS NO. 1"

NOTES:

(1) This LOTB sheet was prepared in accordance with the Caltrans Soil and Rock Logging, Classification and Presentation Manual (June 2007)
(2) 2.4" samples were taken using a California Modified Sampler.
(3) An automatic trip hammer system consisting of a hammer weight of 140 lbs falling a distance of 30" was used to advance the drive sampler.
(4) Conversion factor from 2.4" Modified California Ring Sampler blowcounts to Standard Penetration Test (SPT) blowcounts is 0.5.

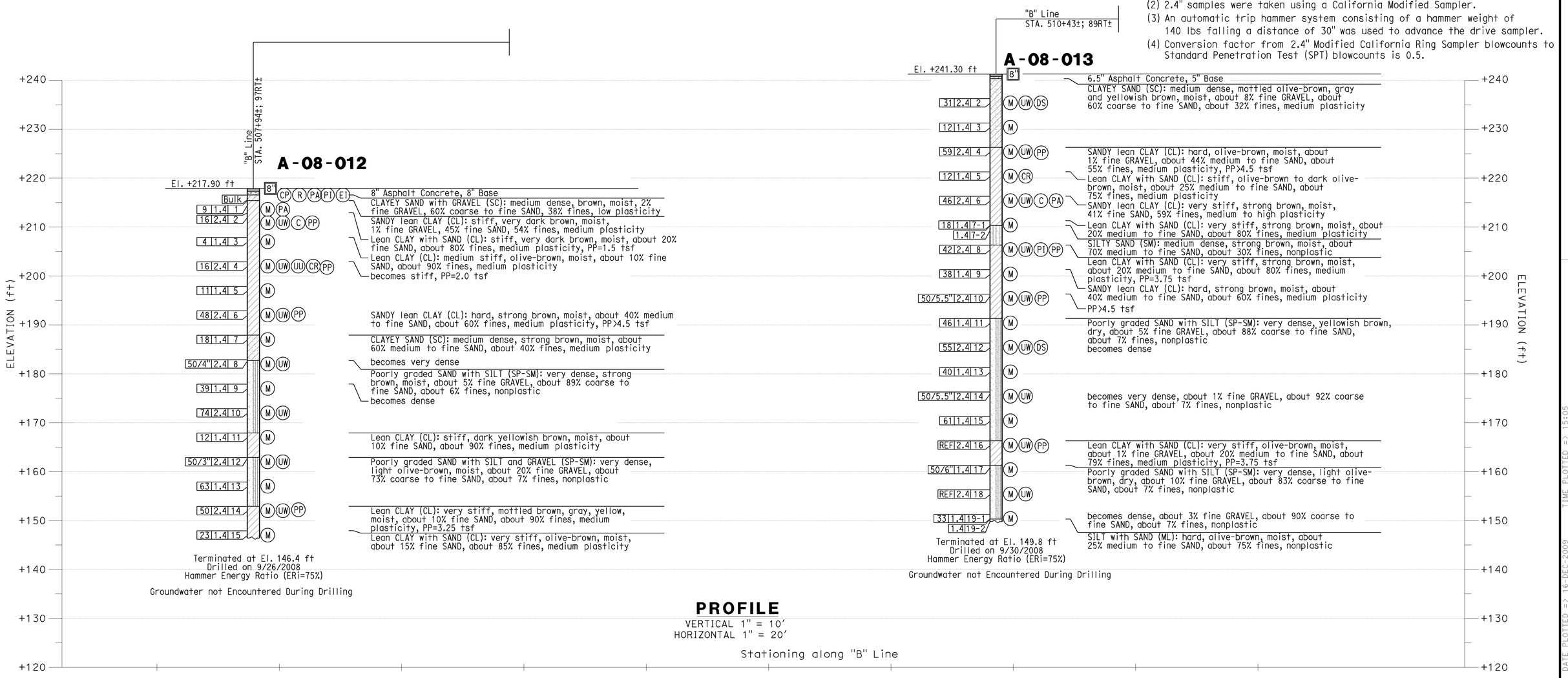

PROFILE

VERTICAL 1" = 10'
HORIZONTAL 1" = 20'

Jon Hamaguchi — DESIGN OVERSIGHT; 6-24-09 SIGN OFF DATE	DRAWN BY: J.Fang; CHECKED BY: L.Cheang	FIELD INVESTIGATION BY: R.Jie	PREPARED FOR THE STATE OF CALIFORNIA DEPARTMENT OF TRANSPORTATION	C. Yang PROJECT ENGINEER	BRIDGE NO. 55E0083; POST MILES 16.2/18.6	RETAINING WALL NO. 496 LOG OF TEST BORINGS NO. 5

DESIGN GENERAL PLAN SHEET (ENGLISH) (REV. 2/25/05)

ORIGINAL SCALE IN INCHES FOR REDUCED PLANS 0 1 2 3

CU 12
EA 0F0311

DISREGARD PRINTS BEARING EARLIER REVISION DATES →

REVISION DATES (PRELIMINARY STAGE ONLY): 4/30/09

SHEET 28 OF 33

FILE => 55-496-z-ltb05.dgn

USERNAME => jwright DATE PLOTTED => 16-DEC-2009 TIME PLOTTED => 15:05

REFERENCE: CALTRANS SOIL & ROCK LOGGING, CLASSIFICATION, AND PRESENTATION MANUAL (JUNE 2007)

Dist	COUNTY	ROUTE	POST MILES TOTAL PROJECT	SHEET No.	TOTAL SHEETS
12	Ora	57	16.2/28.6	408	960

REGISTERED CIVIL ENGINEER — DATE 06/17/09

12-14-09
PLANS APPROVAL DATE

REGISTERED PROFESSIONAL ENGINEER — Chien-Tai Yang — No. C 66394 — Exp. 6-30-10 — CIVIL — STATE OF CALIFORNIA

THE STATE OF CALIFORNIA OR ITS OFFICERS OR AGENTS SHALL NOT BE RESPONSIBLE FOR THE ACCURACY OR COMPLETENESS OF SCANNED COPIES OF THIS PLAN SHEET.

ORANGE COUNTY TRANSPORTATION AUTHORITY
550 S. MAIN STREET
ORANGE, CA 92863-1584

EARTH MECHANICS, INC.
17660 NEWHOPE STREET, SUITE E
FOUNTAIN VALLEY, CA 92708

CEMENTATION

Description	Criteria
Weak	Crumbles or breaks with handling or little finger pressure.
Moderate	Crumbles or breaks with considerable finger pressure.
Strong	Will not crumble or break with finger pressure.

BOREHOLE IDENTIFICATION

Symbol	Hole Type	Description
Size	A	Auger Boring
Size	R P	Rotary drilled boring Rotary percussion boring (air)
Size	R	Rotary drilled diamond core
Size	HD HA	Hand driven (1-inch soil tube) Hand Auger
●	D	Dynamic Cone Penetration Boring
▲	CPT	Cone Penetration Test (ASTM D 5778-95)
⬚	O	Other

Note: Size in inches.

CONSISTENCY OF COHESIVE SOILS

Description	Unconfined Compressive Strength (tsf)	Pocket Penetrometer Measurement (tsf)	Torvane Measurement (tsf)	Field Approximation
Very Soft	< 0.25	< 0.25	< 0.12	Easily penetrated several inches by fist
Soft	0.25 to 0.50	0.25 to 0.50	0.12 to 0.25	Easily penetrated several inches by thumb
Medium Stiff	0.50 to 1.0	0.50 to 1.0	0.25 to 0.50	Penetrated several inches by thumb with moderate effort
Stiff	1 to 2	1 to 2	0.50 to 1.0	Readily indented by thumb but penetrated only with great effort
Very Stiff	2 to 4	2 to 4	1.0 to 2.0	Readily indented by thumbnail
Hard	> 4.0	> 4.0	> 2.0	Indented by thumbnail with difficulty

PLASTICITY OF FINE-GRAINED SOILS

Description	Criteria
Nonplastic	A 1/8-inch thread cannot be rolled at any water content.
Low	The thread can barely be rolled and the lump cannot be formed when drier than the plastic limit.
Medium	The thread is easy to roll and not much time is required to reach the plastic limit. The thread cannot be rerolled after reaching the plastic limit. The lump crumbles when drier than the plastic limit.
High	It takes considerable time rolling and kneading to reach the plastic limit. The thread can be rerolled several times after reaching the plastic limit. The lump can be formed without crumbling when drier than the plastic limit.

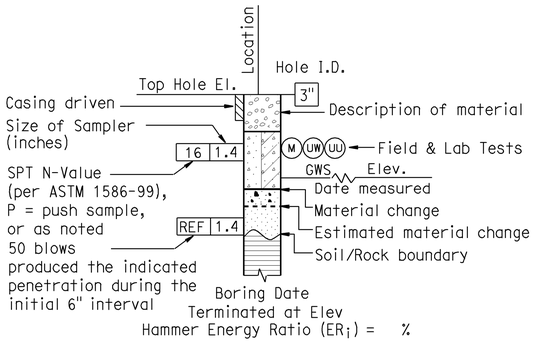

ROTARY BORING

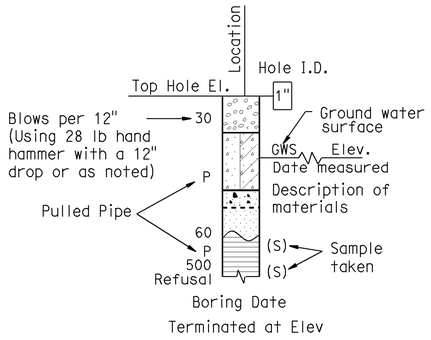

HAND BORING

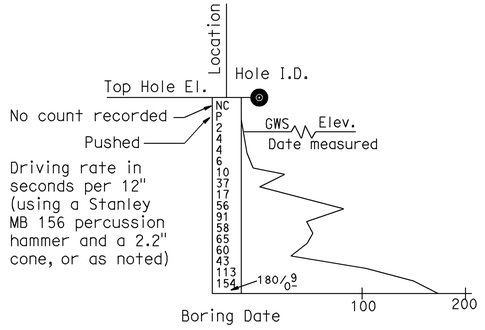

DYNAMIC CONE PENETRATION BORING

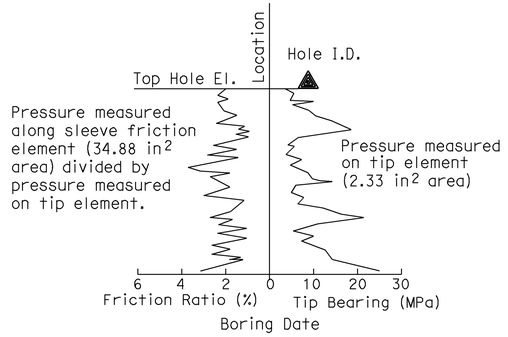

CONE PENETRATION TEST (CPT) SOUNDING

DESIGN OVERSIGHT Jon Hanaguchi 6-24-09 SIGN OFF DATE	DRAWN BY: J.Fang CHECKED BY: L.Cheang	FIELD INVESTIGATION BY: R.Jie	PREPARED FOR THE STATE OF CALIFORNIA DEPARTMENT OF TRANSPORTATION	C. Yang PROJECT ENGINEER	BRIDGE NO. 55E0083 POST MILES 16.2/18.6	RETAINING WALL NO. 496 LOG OF TEST BORINGS NO. 6

DESIGN GENERAL PLAN SHEET (ENGLISH) (REV. 2/25/05)

ORIGINAL SCALE IN INCHES FOR REDUCED PLANS 0 1 2 3

CU 12
EA 0F0311

DISREGARD PRINTS BEARING EARLIER REVISION DATES →

REVISION DATES (PRELIMINARY STAGE ONLY)

SHEET 29 OF 33

FILE => 55-496-z-ltb06.dgn

USERNAME => ttright DATE PLOTTED => 16-DEC-2009 TIME PLOTTED => 15:05

REFERENCE: CALTRANS SOIL & ROCK LOGGING, CLASSIFICATION, AND PRESENTATION MANUAL (JUNE 2007)

GROUP SYMBOLS AND NAMES

Graphic/Symbol	Group Names	Graphic/Symbol	Group Names
GW	Well-graded GRAVEL Well-graded GRAVEL with SAND	CL	Lean CLAY Lean CLAY with SAND Lean CLAY with GRAVEL SANDY lean CLAY SANDY lean CLAY with GRAVEL GRAVELLY lean CLAY GRAVELLY lean CLAY with SAND
GP	Poorly graded GRAVEL Poorly graded GRAVEL with SAND		
GW-GM	Well-graded GRAVEL with SILT Well-graded GRAVEL with SILT and SAND	CL-ML	SILTY CLAY SILTY CLAY with SAND SILTY CLAY with GRAVEL SANDY SILTY CLAY SANDY SILTY CLAY with GRAVEL GRAVELLY SILTY CLAY GRAVELLY SILTY CLAY with SAND
GW-GC	Well-graded GRAVEL with CLAY (or SILTY CLAY) Well-graded GRAVEL with CLAY and SAND (or SILTY CLAY and SAND)		
GP-GM	Poorly graded GRAVEL with SILT Poorly graded GRAVEL with SILT and SAND	ML	SILT SILT with SAND SILT with GRAVEL SANDY SILT SANDY SILT with GRAVEL GRAVELLY SILT GRAVELLY SILT with SAND
GP-GC	Poorly graded GRAVEL with CLAY (or SILTY CLAY) Poorly graded GRAVEL with CLAY and SAND (or SILTY CLAY and SAND)		
GM	SILTY GRAVEL SILTY GRAVEL with SAND	OL	ORGANIC lean CLAY ORGANIC lean CLAY with SAND ORGANIC lean CLAY with GRAVEL SANDY ORGANIC lean CLAY SANDY ORGANIC lean CLAY with GRAVEL GRAVELLY ORGANIC lean CLAY GRAVELLY ORGANIC lean CLAY with SAND
GC	CLAYEY GRAVEL CLAYEY GRAVEL with SAND		
GC-GM	SILTY, CLAYEY GRAVEL SILTY, CLAYEY GRAVEL with SAND	OL	ORGANIC SILT ORGANIC SILT with SAND ORGANIC SILT with GRAVEL SANDY ORGANIC SILT SANDY ORGANIC SILT with GRAVEL GRAVELLY ORGANIC SILT GRAVELLY ORGANIC SILT with SAND
SW	Well-graded SAND Well-graded SAND with GRAVEL		
SP	Poorly graded SAND Poorly graded SAND with GRAVEL	CH	Fat CLAY Fat CLAY with SAND Fat CLAY with GRAVEL SANDY fat CLAY SANDY fat CLAY with GRAVEL GRAVELLY fat CLAY GRAVELLY fat CLAY with SAND
SW-SM	Well-graded SAND with SILT Well-graded SAND with SILT and GRAVEL		
SW-SC	Well-graded SAND with CLAY (or SILTY CLAY) Well-graded SAND with CLAY and GRAVEL (or SILTY CLAY and GRAVEL)	MH	Elastic SILT Elastic SILT with SAND Elastic SILT with GRAVEL SANDY elastic SILT SANDY elastic SILT with GRAVEL GRAVELLY elastic SILT GRAVELLY elastic SILT with SAND
SP-SM	Poorly graded SAND with SILT Poorly graded SAND with SILT and GRAVEL		
SP-SC	Poorly graded SAND with CLAY (or SILTY CLAY) Poorly graded SAND with CLAY and GRAVEL (or SILTY CLAY and GRAVEL)	OH	ORGANIC fat CLAY ORGANIC fat CLAY with SAND ORGANIC fat CLAY with GRAVEL SANDY ORGANIC fat CLAY SANDY ORGANIC fat CLAY with GRAVEL GRAVELLY ORGANIC fat CLAY GRAVELLY ORGANIC fat CLAY with SAND
SM	SILTY SAND SILTY SAND with GRAVEL		
SC	CLAYEY SAND CLAYEY SAND with GRAVEL	OH	ORGANIC elastic SILT ORGANIC elastic SILT with SAND ORGANIC elastic SILT with GRAVEL SANDY ORGANIC elastic SILT SANDY ORGANIC elastic SILT with GRAVEL GRAVELLY ORGANIC elastic SILT GRAVELLY ORGANIC elastic SILT with SAND
SC-SM	SILTY, CLAYEY SAND SILTY, CLAYEY SAND with GRAVEL		
PT	PEAT	OL/OH	ORGANIC SOIL ORGANIC SOIL with SAND ORGANIC SOIL with GRAVEL SANDY ORGANIC SOIL SANDY ORGANIC SOIL with GRAVEL GRAVELLY ORGANIC SOIL GRAVELLY ORGANIC SOIL with SAND
	COBBLES COBBLES and BOULDERS BOULDERS		

FIELD AND LABORATORY TESTING

- (C) Consolidation (ASTM D 2435)
- (CL) Collapse Potential (ASTM D 5333)
- (CP) Compaction Curve (CTM 216)
- (CR) Corrosivity Testing (CTM 643, CTM 422, CTM 417)
- (CU) Consolidated Undrained Triaxial (ASTM D 4767)
- (DS) Direct Shear (ASTM D 3080)
- (EI) Expansion Index (ASTM D 4829)
- (M) Moisture Content (ASTM D 2216)
- (OC) Organic Content-% (ASTM D 2974)
- (P) Permeability (CTM 220)
- (PA) Particle Size Analysis (ASTM D 422)
- (PI) Plasticity Index (AASHTO T 90) Liquid Limit (AASHTO T 89)
- (PL) Point Load Index (ASTM D 5731)
- (PM) Pressure Meter
- (PP) Pocket Penetrometer
- (R) R-Value (CTM 301)
- (SE) Sand Equivalent (CTM 217)
- (SG) Specific Gravity (AASHTO T 100)
- (SL) Shrinkage Limit (ASTM D 427)
- (SW) Swell Potential (ASTM D 4546)
- (TV) Pocket Torvane
- (UC) Unconfined Compression-Soil (ASTM D 2166); Unconfined Compression-Rock (ASTM D 2938)
- (UU) Unconsolidated Undrained Triaxial (ASTM D 2850)
- (UW) Unit Weight (ASTM D 4767)
- (VS) Vane Shear (AASHTO T 223)

Dist	COUNTY	ROUTE	POST MILES TOTAL PROJECT	SHEET No.	TOTAL SHEETS
12	Ora	57	16.2/28.6	409	960

C. Yang 06/17/09
REGISTERED CIVIL ENGINEER DATE

12-14-09
PLANS APPROVAL DATE

REGISTERED PROFESSIONAL ENGINEER — Chien-Tai Yang — No. C 66394 — Exp. 6-30-10 — CIVIL — STATE OF CALIFORNIA

THE STATE OF CALIFORNIA OR ITS OFFICERS OR AGENTS SHALL NOT BE RESPONSIBLE FOR THE ACCURACY OR COMPLETENESS OF SCANNED COPIES OF THIS PLAN SHEET.

ORANGE COUNTY TRANSPORTATION AUTHORITY
550 S. MAIN STREET
ORANGE, CA 92863-1584

EARTH MECHANICS, INC.
17660 NEWHOPE STREET, SUITE E
FOUNTAIN VALLEY, CA 92708

APPARENT DENSITY OF COHESIONLESS SOILS

Description	SPT N_{60} (Blows / 12 inches)
Very loose	0 - 4
Loose	5 - 10
Medium Dense	11 - 30
Dense	31 - 50
Very Dense	> 50

MOISTURE

Description	Criteria
Dry	Absence of moisture, dusty, dry to the touch
Moist	Damp but no visible water
Wet	Visible free water, usually soil is below water table

PERCENT OR PROPORTION OF SOILS

Description	Criteria
Trace	Particles are present but estimated to be less than 5%
Few	5 to 10%
Little	15 to 25%
Some	30 to 45%
Mostly	50 to 100%

PARTICLE SIZE

Description		Size
Boulder		> 12"
Cobble		3" to 12"
Gravel	Coarse	3/4" to 3"
	Fine	No. 4 to 3/4"
Sand	Coarse	No. 10 to No. 4
	Medium	No. 40 to No. 10
	Fine	No. 200 to No. 40

Jon Hamaguchi
DESIGN OVERSIGHT Jon Hamaguchi
6-24-09
SIGN OFF DATE

DRAWN BY: J.Fang
CHECKED BY: L.Cheang

FIELD INVESTIGATION BY:
R.Jie

PREPARED FOR THE STATE OF CALIFORNIA DEPARTMENT OF TRANSPORTATION

C. Yang
PROJECT ENGINEER

BRIDGE NO. 55E0083
POST MILES 16.2/18.6

RETAINING WALL NO. 496
LOG OF TEST BORINGS NO. 7

DESIGN GENERAL PLAN SHEET (ENGLISH) (REV. 2/25/05)

ORIGINAL SCALE IN INCHES FOR REDUCED PLANS 0 1 2 3

CU 12
EA 0F0311

DISREGARD PRINTS BEARING EARLIER REVISION DATES →

REVISION DATES (PRELIMINARY STAGE ONLY)

SHEET 30 OF 33

FILE => 55-496-z-ltb07.dgn

USERNAME => ?ttright DATE PLOTTED => 16-DEC-2009 TIME PLOTTED => 15:05

DIST.	COUNTY	ROUTE	POST MILES TOTAL PROJECT	SHEET NO.	TOTAL SHEETS
12	Ora	57	11.1/21.2	490	491

Kul Bhushan 12/22/89
GEOTECHNICAL PROFESSIONAL

10-29-90
PLANS APPROVAL DATE

REGISTERED PROFESSIONAL ENGINEER — KUL BHUSHAN — No. GE 000144 — Exp. 12/31/1989 — GEOTECHNICAL — STATE OF CALIFORNIA

GEOFON, INC.
5552 CERRITOS AVENUE, SUITE B
CYPRESS, CALIFORNIA
JOB NO.: 88-351

DIVISION OF ENGINEERING SERVICES - GEOTECHNICAL SERVICES

As-Built Log of Test Borings sheet is considered an informational document only. As such, the State of California registration seal with signature, license number and registration certificate expiration date confirm that this is a true and accurate copy of the original document. This drawing is available and presented only for the convenience of any bidder, contractor or other interested party.

DIST.	COUNTY	ROUTE	POST MILES -TOTAL PROJECT	Sheet No.	Total Sheets
12	Ora	57	16.2/18.6	410	960

Lino Cheang 06/17/09
REGISTERED CIVIL ENGINEER — DATE

REGISTERED PROFESSIONAL ENGINEER — LINO C. CHEANG — NO. GE 2345 — EXP. 9/30/09 — GEOTECHNICAL — STATE OF CALIFORNIA

RETAINING WALL NO. 496

LOG OF TEST BORINGS NO. 8

NOTE: A COPY OF THIS LOG OF TEST BORINGS IS AVAILABLE AT OFFICE OF STRUCTURE MAINTENANCE AND INVESTIGATIONS, SACRAMENTO, CALIFORNIA

CU: 12
EA: 0F0311

BRIDGE No.	
55E0083	
Sheet	of
31	33

To accompany plans dated 12-14-09

(BRIDGE NO. 55-449)
PLACENTIA OVERHEAD

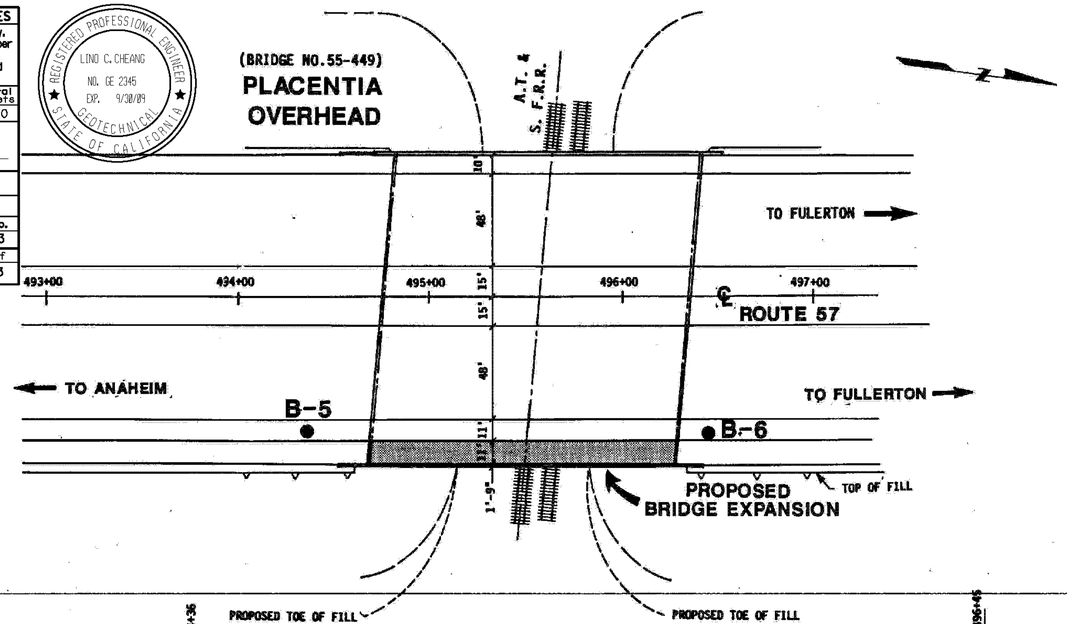

PLAN
SCALE: 1"=40'

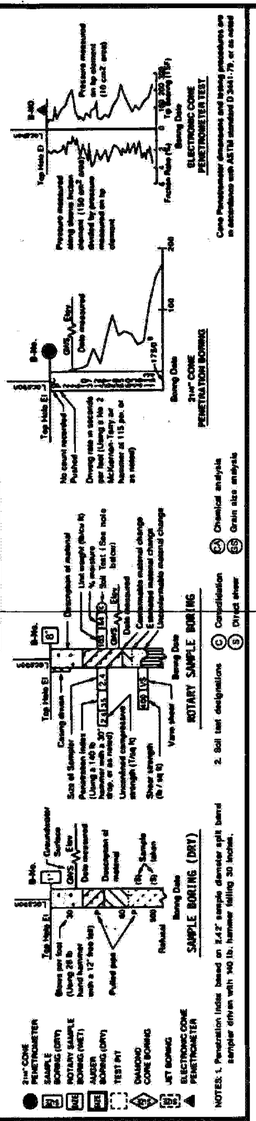

PROFILE
VERTICAL SCALE: 1"=10'
HORIZONTAL SCALE: 1"=20'

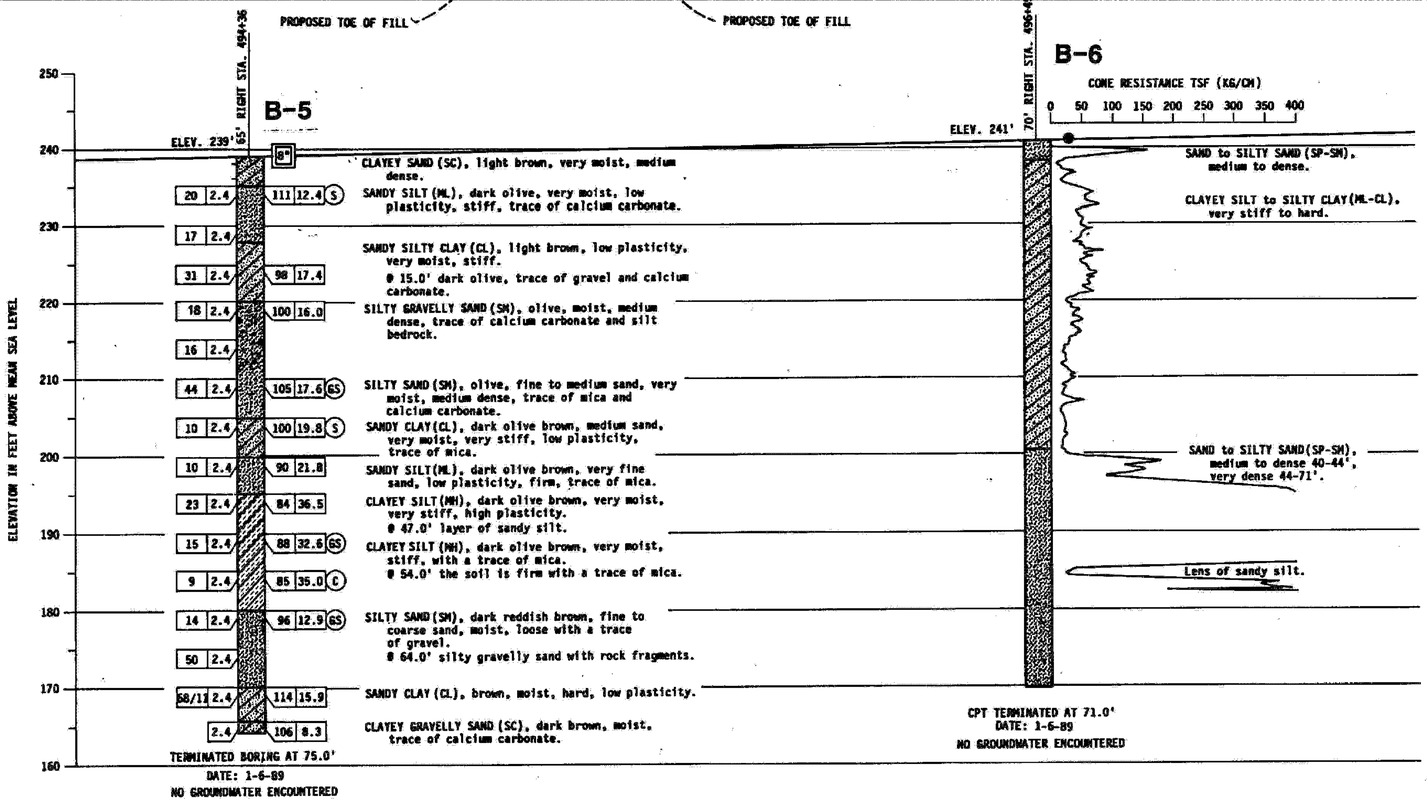

AS BUILT
NO AS BUILT CHANGES
CORRECTIONS BY J. PAINEIRO
CONTRACT NO. 12-020184
DATE 11-23-92

BM 535-D-70 — ELEVATION 257.37

FOUND CHISELED CROSS ON TOP OF THE NW ANCHOR BOLT OF A SIGN BASE 77 FEET EASTERLY OF THE CENTERLINE OF ROUTE 57 (ORANGE FREEWAY) STATION 535+50 AND 105 FEET NORTHERLY OF THE CENTERLINE OF NUTWOOD AVE..

DESIGN OVERSIGHT 8-22-90
SIGN OFF DATE

DRAWN BY B. BASMADJIAN
CHECKED BY H. ABDALLAH

S. MoHAMAD
FIELD INVESTIGATOR
DATE 12-28-89

PREPARED FOR THE
STATE OF CALIFORNIA
DEPARTMENT OF TRANSPORTATION

Victor Lee
PROJECT ENGINEER

ORIGINAL SCALE IN INCHES FOR REDUCED PLANS 0 1 2 3

CU 12208
EA 020181

BRIDGE NO.	PLACENTIA OVERHEAD (WIDEN)
55-449	
POST MILE	LOG OF TEST BORINGS
16.9	

DISREGARD PRINTS BEARING EARLIER REVISION DATES →
REVISION DATES (PRELIMINARY STAGE ONLY)
SHEET 13 OF 14

FILENAME => 55-496-z-itb08.tif

FED. ROAD DIV. NO.	STATE	F. A. PROJECT NO.	SHEET NO.	TOTAL SHEETS
7	CALIF.			

DIST.	COUNTY	ROUTE	SECTION	PHASE NO.	TOTAL PHASES
07	ORA	57	16.2/18.6	1	1

DATE APPROVED August 28, 1967

BENCH MARK

BM " 496-65 Elev. 211.968
Set R/S in N.W. footing of R.P. signal activator 23.3 Ft. E. of ℄ Fwy. & 25 Ft. ± N. of ℄ at A.T.& S.F. R.R. (Main line)

B-3 B-2 B-1 B-4

℄ FWY RTE 57

℄ A.T. & S.F. RWY.

123

122

N 612,716.586
E 305,727.805

493 494 495 496 497 498

PLAN
Scale 1"= 20'

AS BUILT PLANS
Contract No. 07-032124
Date Completed
Document No. 70000668

NO GROUND WATER ENCOUNTERED DURING THIS INVESTIGATION BY BRIDGE DEPT. GEOLOGY SECTION
DATE April 1966

Approx. existing ground line along ℄ Fwy. Rte. 57

76' Lt. Sta. 493+23 ℄ Fwy. Rte. 57
85' Rt. Sta. 495+32 ℄ Fwy. Rte. 57
71' Lt. Sta. 496+18 ℄ Fwy. Rte. 57
75' Rt. Sta. 496+25 ℄ Fwy. Rte. 57

B-3 206± B-4 205± B-2 210± B-1 206±

Slightly compact to stiff brown silt and some clayey silt

Dense to very dense light brown to reddish-tan gravelly poorly sorted sand with a few sandy silt interbeds.

210 200 190 180 170

493 494 495 496 497 498

PROFILE
Scale Vert. 1"= 10', Horiz. 1"= 20'

LEGEND OF BORING OPERATIONS

- Penetrometer
- 2½" Dia. Penetrometer
- Sampler Boring (Dry)
- Rotary Boring (Wet)
- Auger Boring (Dry)
- Jet Boring
- Core Boring
- Test Pit

LEGEND OF EARTH MATERIALS

- Gravel
- Silty Clay or Clayey Silt
- Sand
- Peat and/or Organic Matter
- Silt
- Fill Material
- Clay
- Igneous Rock
- Sandy Clay or Clayey Sand
- Sedimentary Rock
- Sandy Silt or Silty Sand
- Metamorphic Rock

CLASSIFICATION OF MATERIAL BASED ON STANDARD GRADE SOIL LIMITS

Diagram showing the basis for estimates of grade size distribution used in determining soil classifications. It assigns the term "gravelly" when 15 percent, by weight, is present in accordance with the "Standard Grade Size Limits". The terms "fine", "medium" and "coarse" are added to the class name, viz. "coarse sandy gravel". The terms "fine", "medium" and "coarse" are used to describe sand, silt and gravel. Refer to Standard Grade Size Limits.

NOTE: Classification of earth material as shown on this sheet is based upon field inspection and is not to be construed to imply mechanical analysis.

DIVISION OF ENGINEERING SERVICES - GEOTECHNICAL SERVICES

As-Built Log of Test Borings sheet is considered an informational document only. As such, the State of California registration seal with signature, license number and registration certificate expiration date confirm that this is a true and accurate copy of the original document. This drawing is available and presented only for the convenience of any bidder, contractor or other interested party.

DIST.	COUNTY	ROUTE	POST MILES - TOTAL PROJECT	Sheet No.	Total Sheets
12	Ora	57	16.2/18.6	411	960

Lino Cheang 06/17/09
REGISTERED CIVIL ENGINEER DATE

REGISTERED PROFESSIONAL ENGINEER — LINO C. CHEANG — NO. GE 2345 — EXP. 9/30/09 — GEOTECHNICAL — STATE OF CALIFORNIA

RETAINING WALL NO. 496

LOG OF TEST BORINGS NO. 9

NOTE: A COPY OF THIS LOG OF TEST BORINGS IS AVAILABLE AT OFFICE OF STRUCTURE MAINTENANCE AND INVESTIGATIONS, SACRAMENTO, CALIFORNIA

CU: 12
EA: 0F0311

BRIDGE No. 55E0083

Sheet 32 of 33

To accompany plans dated 12-14-09

	BY	DATE
DESIGNED	R. MCCREAD	9-8-66
DRAWN	M. GARCIA	9-8-66
CHECKED	W. CRAIG	9-8-66

Approved for Permanent Record: Engineering Geologist

BRIDGE DEPARTMENT
ENGINEERING GEOLOGY SECTION

AS BUILT
CORRECTIONS BY Hixson 7-25-69
CONTRACT NO. 07-032124
DATE 5-11-69

SHEET 13 OF 13

STATE OF CALIFORNIA
DEPARTMENT OF PUBLIC WORKS
DIVISION OF HIGHWAYS

PLACENTIA OVERHEAD

LOG OF TEST BORINGS

SCALE As Noted | BRIDGE 55-449 R/L | FILE | DRAWING 55449-1/6

Charge 07208
W.A. 032121

Disregard prints bearing earlier numbers → PREL. DRAWING No. PR- 9/67

FILENAME => 55-496-z-1tb09.tif

147

FED. ROAD DIV. NO.	STATE	F. A. PROJECT NO.	SHEET NO.	TOTAL SHEETS
7	CALIF.			

DIST.	COUNTY	ROUTE	SECTION	SHEET NO.	TOTAL SHEETS
07	ORA	57	16.2/18.6	173	197

Date Approved August 28, 1967

BENCH MARK

B.M.# 505R-65 Elev. 202.22
Set bolt & pk. in E. side of P.P.# 961387 203 ft. E. of ℄ Sta. 379+25 Placentia ℄ 150 ft. S. of ℄ Santa Fe Ave. 1' above o/g

PLAN
Scale 1" = 30'

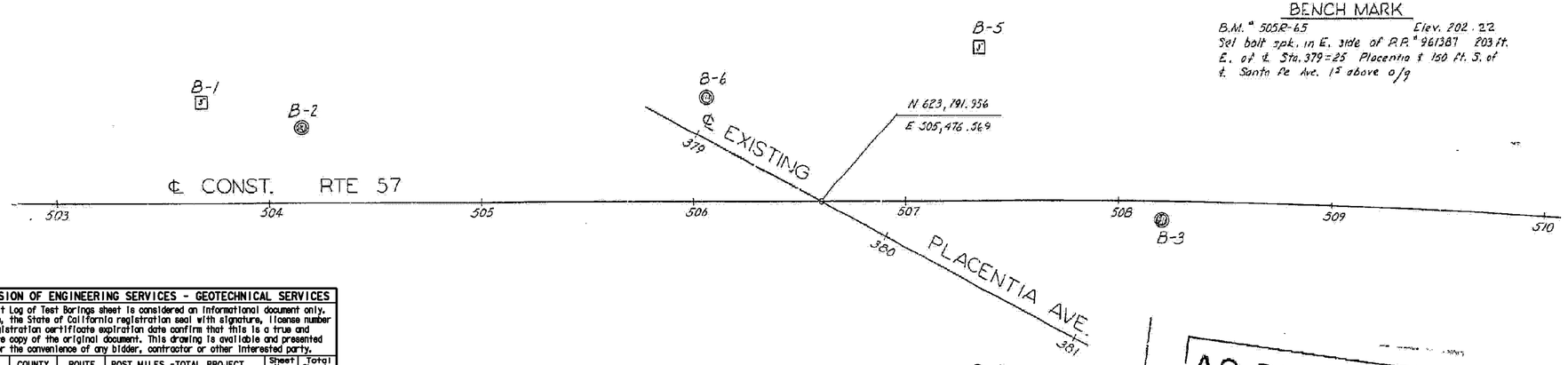

AS BUILT PLANS
Contract No. 07-032124
Date Completed
Document No. 70000668

DIVISION OF ENGINEERING SERVICES - GEOTECHNICAL SERVICES					
As-Built Log of Test Borings sheet is considered an informational document only. As such, the State of California registration seal with signature, license number and registration certificate expiration date confirm that this is a true and accurate copy of the original document. This drawing is available and presented only for the convenience of any bidder, contractor or other interested party.					
DIST.	COUNTY	ROUTE	POST MILES - TOTAL PROJECT	Sheet No.	Total Sheets
12	Ora	57	16.2/18.6	412	960

Lino Cheang 06/17/09
REGISTERED CIVIL ENGINEER DATE

RETAINING WALL NO. 496

LOG OF TEST BORINGS NO. 10

NOTE: A COPY OF THIS LOG OF TEST BORINGS IS AVAILABLE AT OFFICE OF STRUCTURE MAINTENANCE AND INVESTIGATIONS, SACRAMENTO, CALIFORNIA

CU: 12 EA: 0F0311

BRIDGE No. 55E0083

Sheet 33 of 33

To accompany plans dated 12-14-09

REGISTERED PROFESSIONAL ENGINEER
LINO C. CHEANG
NO. GE 2345
EXP. 9/30/09
GEOTECHNICAL
STATE OF CALIFORNIA

NO GROUND WATER ENCOUNTERED DURING THIS INVESTIGATION BY BRIDGE DEPT. GEOLOGY SECTION
DATE April 1966

AS BUILT
CORRECTIONS BY Hlksdl Ltd 7-29-69
CONTRACT NO. 07-032124
DATE 5-11-69

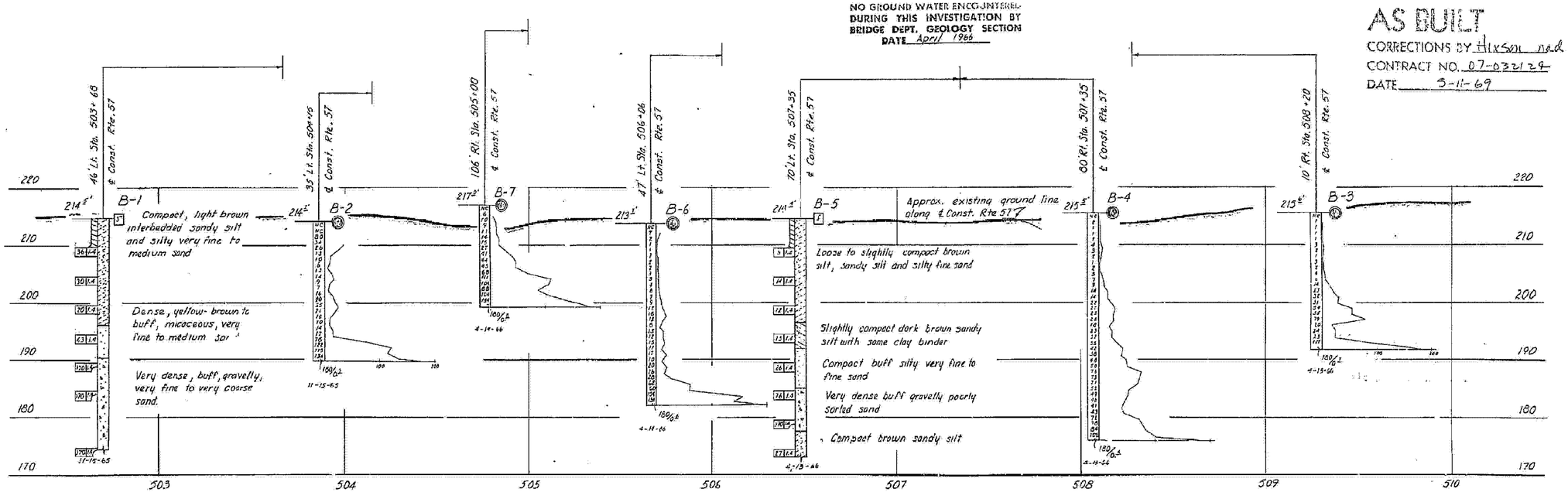

PROFILE
Scale Vert. 1" = 10'
Horiz. 1" = 30'

SHEET	OF
26	26

LEGEND OF EARTH MATERIALS

Gravel; Sand; Silt; Clay; Silty Clay or Clayey Silt; Peat and/or Organic Matter; Fill Material; Igneous Rock; Sandy Clay or Clayey Sand; Sandy Silt or Silty Sand; Sedimentary Rock; Metamorphic Rock

Penetrometer; 2½" Cone Penetrometer; Sampler Boring (Dry); Rotary Boring (Wet); Auger Boring (Dry); Jet Boring; Core Boring; Test Pit

CLASSIFICATION OF MATERIAL BASED ON STANDARD GRADE SIZE LIMITS

Diagram showing the basis for estimates of range and distribution used in determining the classification of material. If gravel is present in appreciable amounts but not to the extent that the name, viz. "gravelly" may be added to the principal name, viz. "sand", the terms "trace", "little", "some", "coarse", "medium" and "fine" when used to describe sand, silt and gravel refer to the standard grade size limits.

NOTE: Classification of earth material as shown on this sheet is based upon field inspection and is not to be construed to imply mechanical analysis.

FIELD STUDY	by D. CRAWFORD	4-20-68
DRAWN	by M. ALDRED	4-20-68
CHECKED	by W. CAIN	5-10-68

Approval Recommended by _____ Engineering Geologist

BRIDGE DEPARTMENT
ENGINEERING GEOLOGY SECTION

STATE OF CALIFORNIA
DEPARTMENT OF PUBLIC WORKS
DIVISION OF HIGHWAYS

PLACENTIA AVENUE UNDERCROSSING

LOG OF TEST BORINGS

SCALE As Noted	BRIDGE 55-460	FILE	DRAWING 55460-2

173

FILENAME => 55-496-z-ltb10.tif

Charge 07208
W.A. 032121

Disregard prints bearing earlier numbers →

PREL. DRAWING No. PR-

Dist	COUNTY	ROUTE	POST MILES TOTAL PROJECT	SHEET No.	TOTAL SHEETS
12	Ora	57	16.2/28.6	413	960

REGISTERED CIVIL ENGINEER 7/15/09 DATE

12-14-09
PLANS APPROVAL DATE

REGISTERED PROFESSIONAL ENGINEER CHAD W. HARDEN No. 67648 Exp. 6-30-11 CIVIL STATE OF CALIFORNIA

THE STATE OF CALIFORNIA OR ITS OFFICERS OR AGENTS SHALL NOT BE RESPONSIBLE FOR THE ACCURACY OR COMPLETENESS OF SCANNED COPIES OF THIS PLAN SHEET.

RBF CONSULTING
14275 ALTON PKWY
IRVINE, CA 92618

OCTA
550 S. MAIN STREET
ORANGE, CA 92863

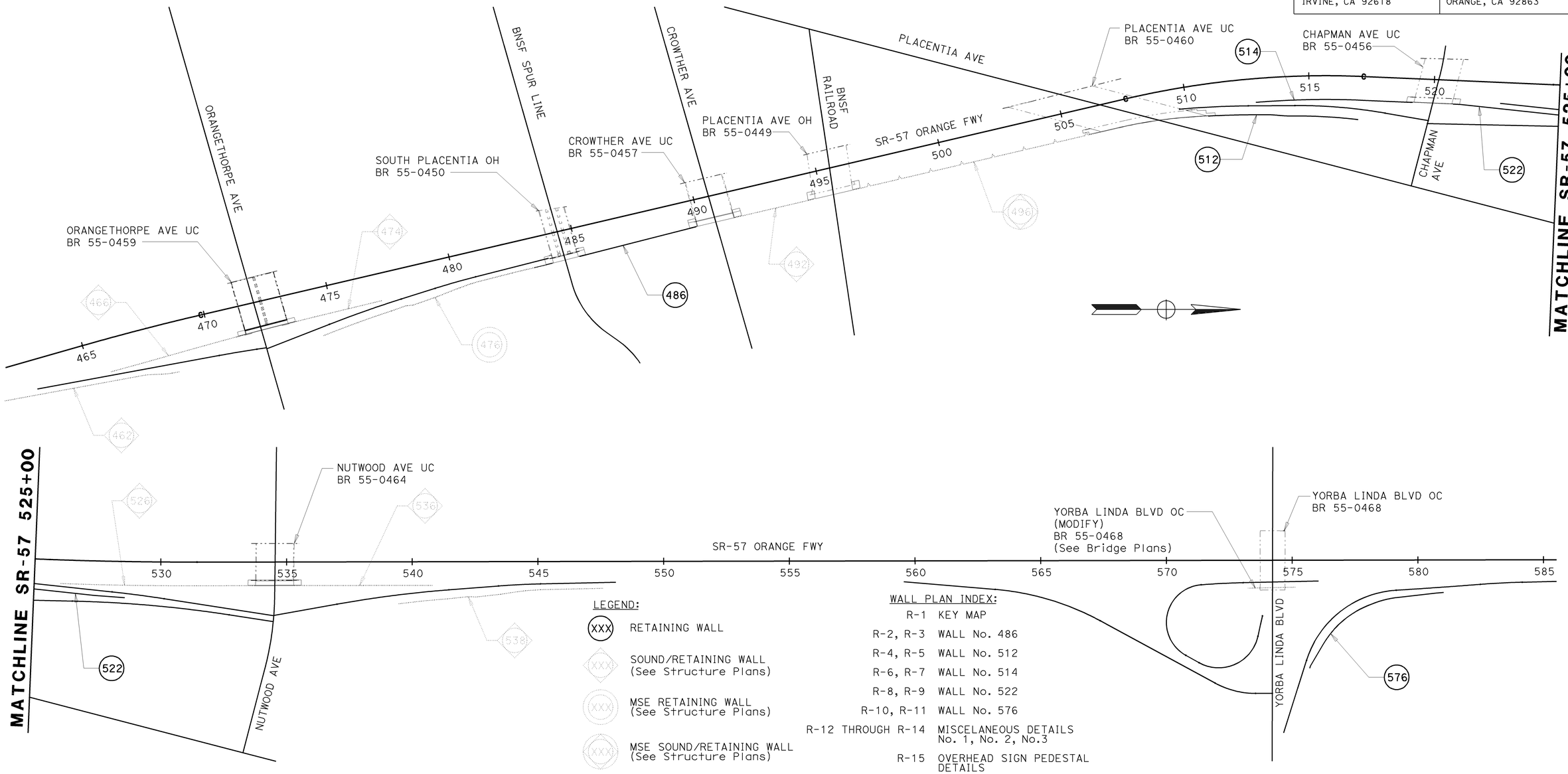

LEGEND:

- XXX RETAINING WALL
- XXX SOUND/RETAINING WALL (See Structure Plans)
- XXX MSE RETAINING WALL (See Structure Plans)
- XXX MSE SOUND/RETAINING WALL (See Structure Plans)

WALL PLAN INDEX:

R-1	KEY MAP
R-2, R-3	WALL No. 486
R-4, R-5	WALL No. 512
R-6, R-7	WALL No. 514
R-8, R-9	WALL No. 522
R-10, R-11	WALL No. 576
R-12 THROUGH R-14	MISCELANEOUS DETAILS No. 1, No. 2, No.3
R-15	OVERHEAD SIGN PEDESTAL DETAILS
R-16, R-17	WALL No. 512, ARCHITECTURAL TREATMENT LAYOUT AND ARCHITECTURAL DETAILS
R-18	QUANTITIES
R-19 THROUGH R-50	LOG OF TEST BORINGS

THIS PLAN ACCURATE FOR RETAINING WALL WORK ONLY.

RETAINING WALL KEY MAP

SCALE: 1" = 200'

R-1

STATE OF CALIFORNIA - DEPARTMENT OF TRANSPORTATION
Caltrans

CONSULTANT FUNCTIONAL SUPERVISOR: PAUL YOUNG
CALCULATED-DESIGNED BY: KELLY GILLIS
CHECKED BY: CHAD HARDEN
REVISED BY
DATE REVISED

H:\pdata\10105878\Admin\submittals\2009-07-15 FINAL Electronic-Only Submittal\DGN-rich1PLOT Files 2009-07-15 FINAL SUBMITTAL\c0F031qa001.dgn

LAST REVISION 00-00-00
DATE PLOTTED => 16-DEC-2009
TIME PLOTTED => 15:08

Dist	COUNTY	ROUTE	POST MILES TOTAL PROJECT	SHEET No.	TOTAL SHEETS
12	Ora	57	16.2/28.6	414	960

REGISTERED CIVIL ENGINEER 7/15/09 DATE

12-14-09
PLANS APPROVAL DATE

REGISTERED PROFESSIONAL ENGINEER CHAD W. HARDEN No. 67648 Exp. 6-30-11 CIVIL STATE OF CALIFORNIA

THE STATE OF CALIFORNIA OR ITS OFFICERS OR AGENTS SHALL NOT BE RESPONSIBLE FOR THE ACCURACY OR COMPLETENESS OF SCANNED COPIES OF THIS PLAN SHEET.

RBF CONSULTING
14275 ALTON PKWY
IRVINE, CA 92618

OCTA
550 S. MAIN STREET
ORANGE, CA 92863

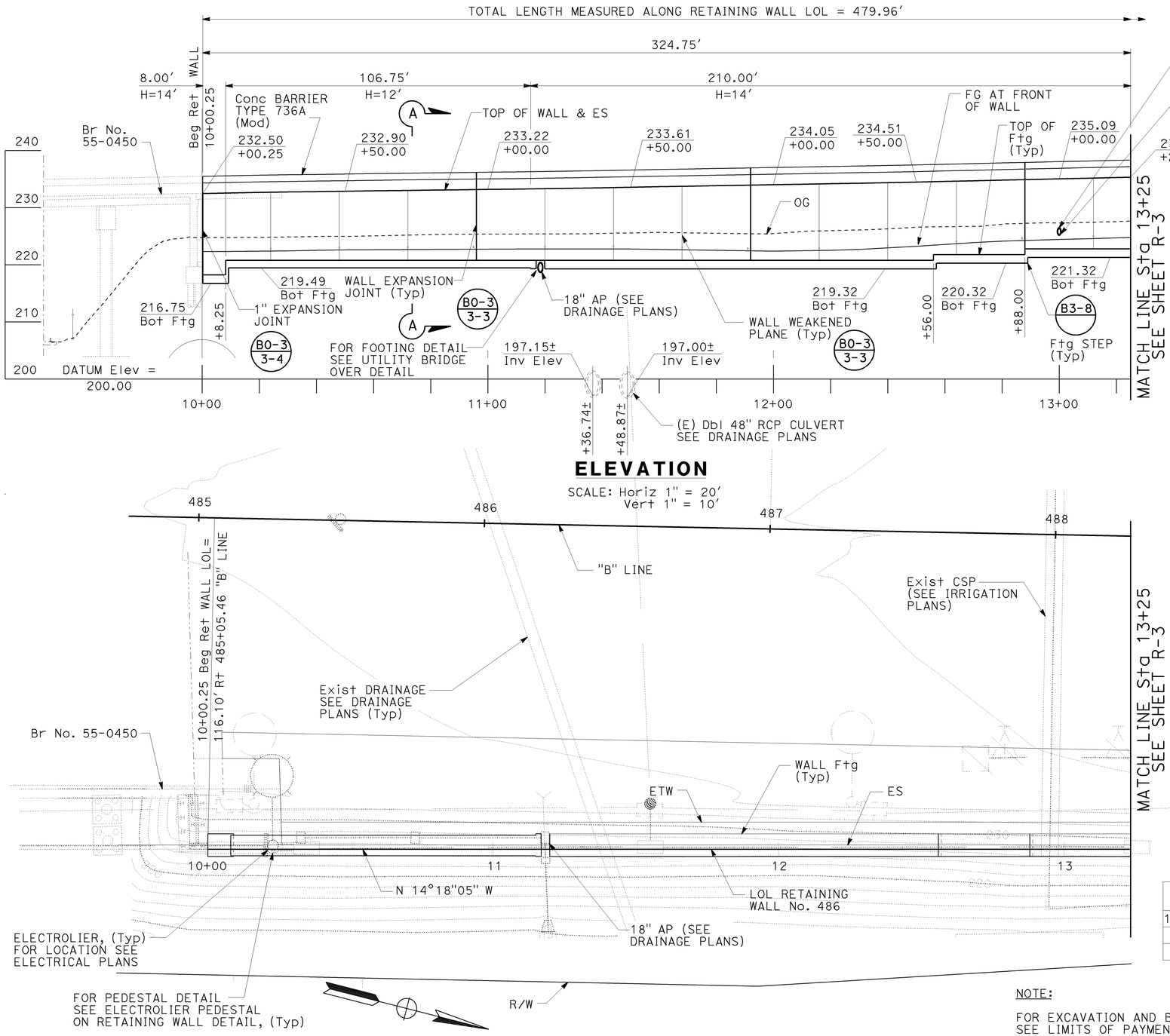

ELEVATION

SCALE: Horiz 1" = 20'
Vert 1" = 10'

PLAN

SCALE: 1" = 20'

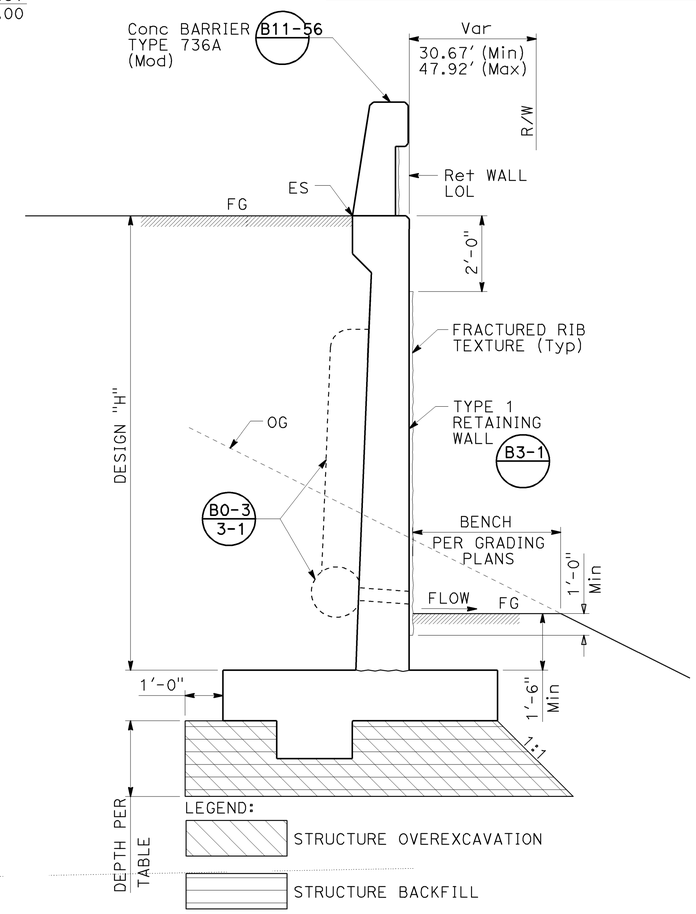

DESIGN "H"	OVER EXCAVATION DEPTH
12'-0" AND LESS	1'-0"
14'-0"	2'-0"
16'-0"	2'-6"

SECTION A-A

NO SCALE

STANDARD PLAN SHEET No.
DETAIL No.

NOTE:

FOR EXCAVATION AND BACKFILL DETAILS, SEE LIMITS OF PAYMENT FOR RETAINING WALL EXCAVATION AND BACKFILL DETAIL.

RETAINING WALL PLAN
WALL No. 486

SCALE: 1" = 20'

R-2

THIS PLAN ACCURATE FOR RETAINING WALL WORK ONLY.

STATE OF CALIFORNIA - DEPARTMENT OF TRANSPORTATION
Caltrans
CONSULTANT FUNCTIONAL SUPERVISOR: PAUL YOUNG
CALCULATED-DESIGNED BY: KELLY GILLIS
CHECKED BY: CHAD HARDEN
REVISED BY
DATE REVISED

H:\pdata\10105878\Admin\submittals\2009-07-15 FINAL Electronic-Only Submittal\DGN rich1PLOT Files 2009-07-15 FINAL SUBMITTAL\c0F031qa002.dgn

LAST REVISION 08-01-08
DATE PLOTTED => 16-DEC-2009
TIME PLOTTED => 15:08

Dist	COUNTY	ROUTE	POST MILES TOTAL PROJECT	SHEET No.	TOTAL SHEETS
12	Ora	57	16.2/28.6	415	960

REGISTERED CIVIL ENGINEER — 7/15/09 DATE

12-14-09
PLANS APPROVAL DATE

REGISTERED PROFESSIONAL ENGINEER — CHAD W. HARDEN — No. 67648 — Exp. 6-30-11 — CIVIL — STATE OF CALIFORNIA

THE STATE OF CALIFORNIA OR ITS OFFICERS OR AGENTS SHALL NOT BE RESPONSIBLE FOR THE ACCURACY OR COMPLETENESS OF SCANNED COPIES OF THIS PLAN SHEET.

RBF CONSULTING
14275 ALTON PKWY
IRVINE, CA 92618

OCTA
550 S. MAIN STREET
ORANGE, CA 92863

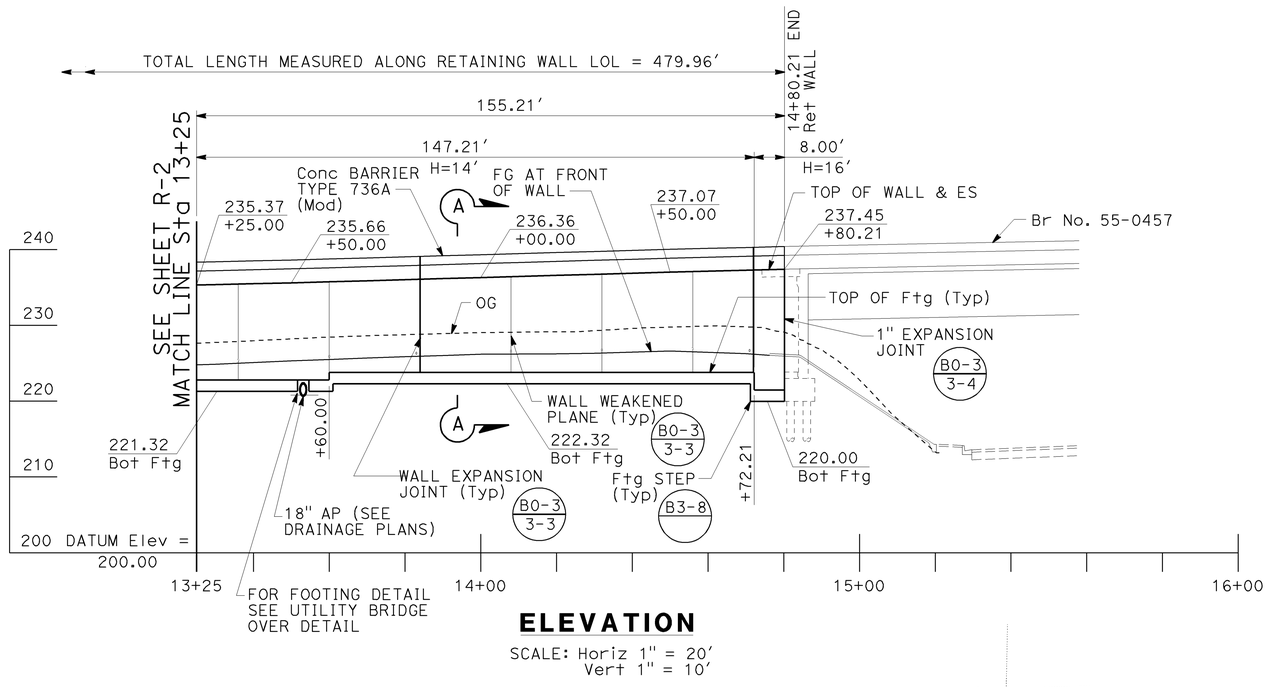

ELEVATION

SCALE: Horiz 1" = 20'
Vert 1" = 10'

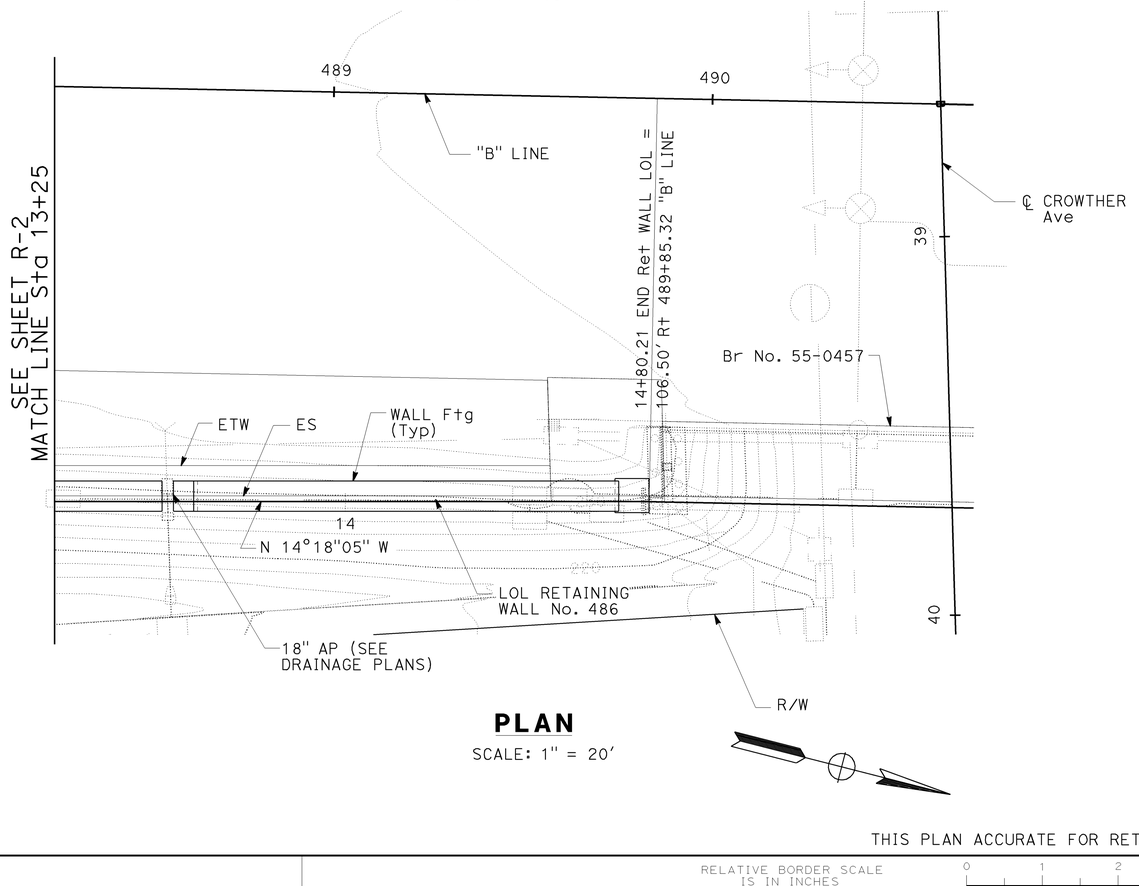

PLAN

SCALE: 1" = 20'

NOTE:

FOR EXCAVATION AND BACKFILL DETAILS, SEE LIMITS OF PAYMENT FOR RETAINING WALL EXCAVATION AND BACKFILL DETAIL.

RETAINING WALL PLAN WALL No. 486

SCALE: 1" = 20'

R-3

THIS PLAN ACCURATE FOR RETAINING WALL WORK ONLY.

H:\pdata\10105878\Admin\submittals\2009-07-15 FINAL Electronic-Only Submittal\DGN\c0F031qa003.dgn

STATE OF CALIFORNIA - DEPARTMENT OF TRANSPORTATION | CONSULTANT FUNCTIONAL SUPERVISOR: PAUL YOUNG | CALCULATED-DESIGNED BY: KELLY GILLIS | CHECKED BY: CHAD HARDEN | REVISED BY | DATE REVISED

LAST REVISION | DATE PLOTTED => 16-DEC-2009 | TIME PLOTTED => 15:08
08-01-08

BORDER LAST REVISED 4/11/2008 | RELATIVE BORDER SCALE IS IN INCHES 0 1 2 3 | USERNAME => trrichf | DGN FILE => c0F031qa003.dgn | CU 12220 | EA 0F0311

Dist	COUNTY	ROUTE	POST MILES TOTAL PROJECT	SHEET No.	TOTAL SHEETS
12	Ora	57	16.2/28.6	416	960

REGISTERED CIVIL ENGINEER — 7/15/09 DATE

12-14-09
PLANS APPROVAL DATE

REGISTERED PROFESSIONAL ENGINEER — CHAD W. HARDEN — No. 67648 — Exp. 6-30-11 — CIVIL — STATE OF CALIFORNIA

THE STATE OF CALIFORNIA OR ITS OFFICERS OR AGENTS SHALL NOT BE RESPONSIBLE FOR THE ACCURACY OR COMPLETENESS OF SCANNED COPIES OF THIS PLAN SHEET.

RBF CONSULTING
14275 ALTON PKWY
IRVINE, CA 92618

OCTA
550 S. MAIN STREET
ORANGE, CA 92863

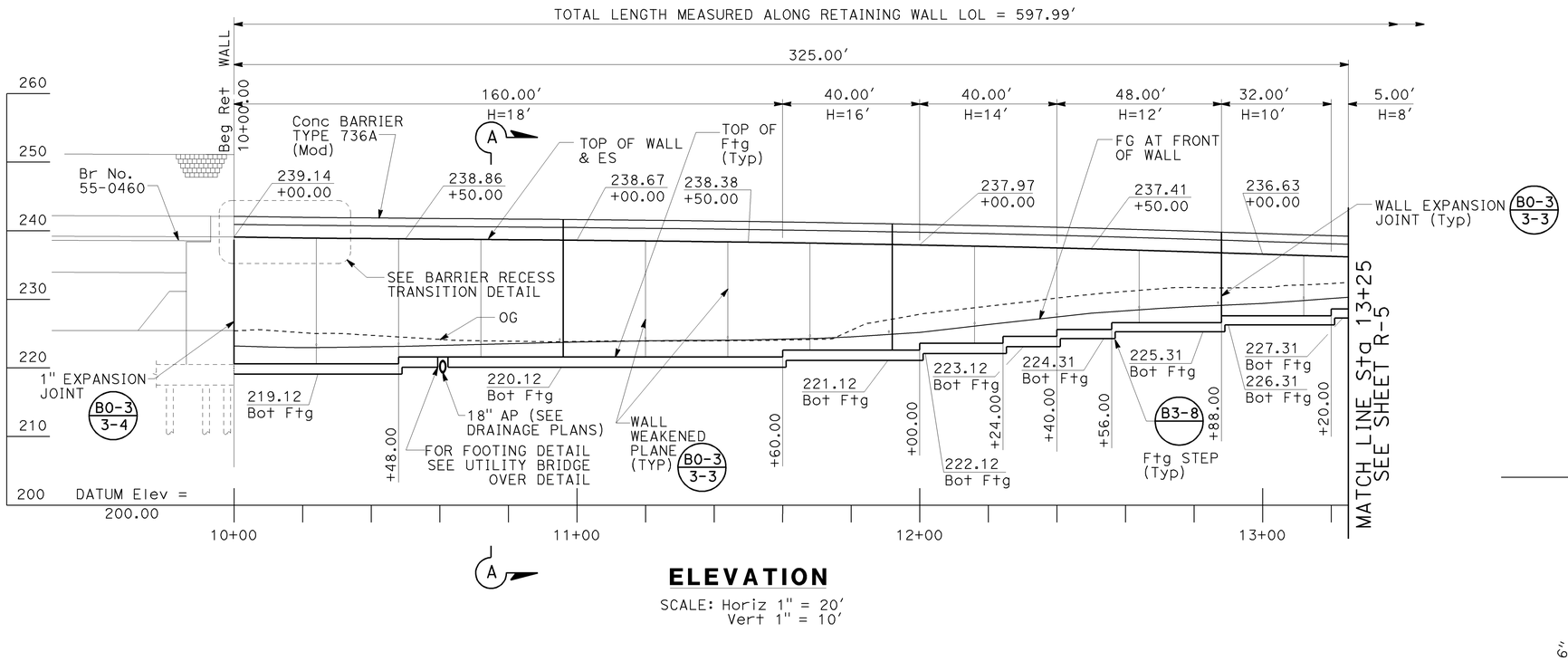

ELEVATION

SCALE: Horiz 1" = 20'
Vert 1" = 10'

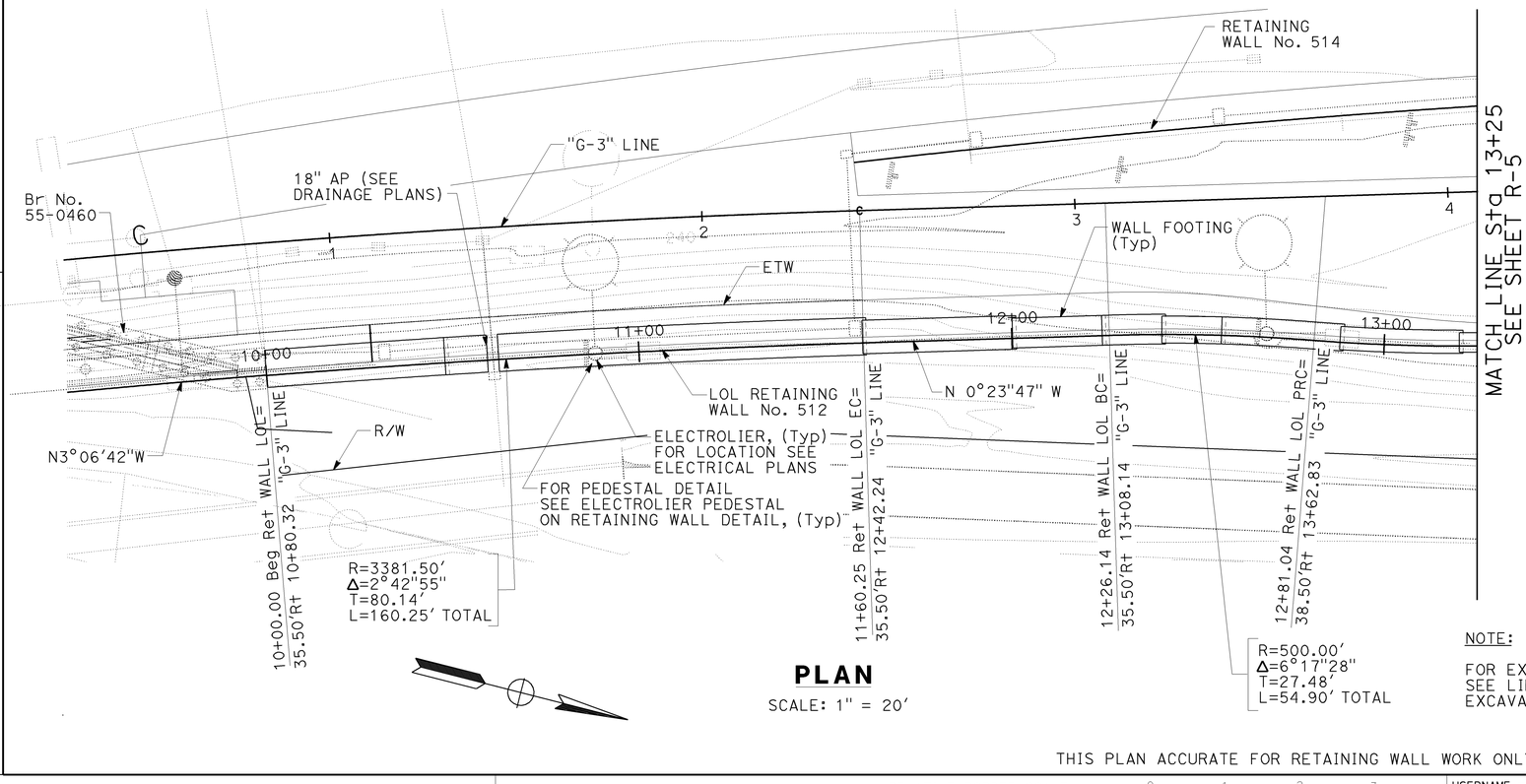

PLAN

SCALE: 1" = 20'

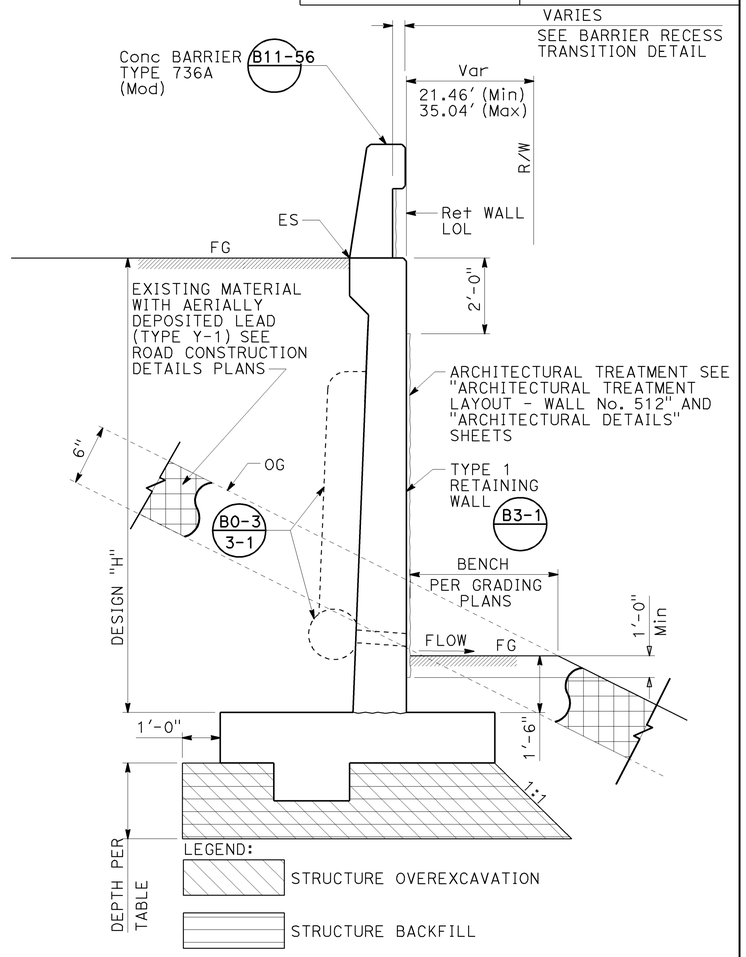

DESIGN "H"	OVER EXCAVATION DEPTH
10'-0" AND LESS	0'-6"
12'-0"	1'-0"
14'-0"	1'-6"
16'-0"	1'-6"
18'-0"	2'-0"

NOTE:

FOR EXCAVATION AND BACKFILL DETAILS, SEE LIMITS OF PAYMENT FOR RETAINING WALL EXCAVATION AND BACKFILL DETAIL.

SECTION A-A

NO SCALE

STANDARD PLAN SHEET No.

DETAIL No.

RETAINING WALL PLAN WALL No. 512

SCALE: 1" = 20'

R-4

THIS PLAN ACCURATE FOR RETAINING WALL WORK ONLY.

STATE OF CALIFORNIA - DEPARTMENT OF TRANSPORTATION
Caltrans
CONSULTANT FUNCTIONAL SUPERVISOR: PAUL YOUNG
CALCULATED-DESIGNED BY: KELLY GILLIS
CHECKED BY: CHAD HARDEN
REVISED BY | DATE REVISED

DATE PLOTTED => 16-DEC-2009
TIME PLOTTED => 15:08
LAST REVISION 08-01-08

H:\pdata\10105878\Admin\submittals\2009-07-15 FINAL Electronic-Only Submittal\DGN\rich
DGN: rich
PLOT: 16-DEC-2009 15:08
File: SUBMITTAL \c0F031qb001.dgn

BORDER LAST REVISED 4/11/2008

RELATIVE BORDER SCALE IS IN INCHES 0 1 2 3

USERNAME => trrichf
DGN FILE => c0F031qb001.dgn

CU 12220

EA 0F0311

Dist	COUNTY	ROUTE	POST MILES TOTAL PROJECT	SHEET No.	TOTAL SHEETS
12	Ora	57	16.2/28.6	417	960

REGISTERED CIVIL ENGINEER 7/15/09 DATE

12-14-09
PLANS APPROVAL DATE

REGISTERED PROFESSIONAL ENGINEER CHAD W. HARDEN No. 67648 Exp. 6-30-11 CIVIL STATE OF CALIFORNIA

THE STATE OF CALIFORNIA OR ITS OFFICERS OR AGENTS SHALL NOT BE RESPONSIBLE FOR THE ACCURACY OR COMPLETENESS OF SCANNED COPIES OF THIS PLAN SHEET.

RBF CONSULTING
14275 ALTON PKWY
IRVINE, CA 92618

OCTA
550 S. MAIN STREET
ORANGE, CA 92863

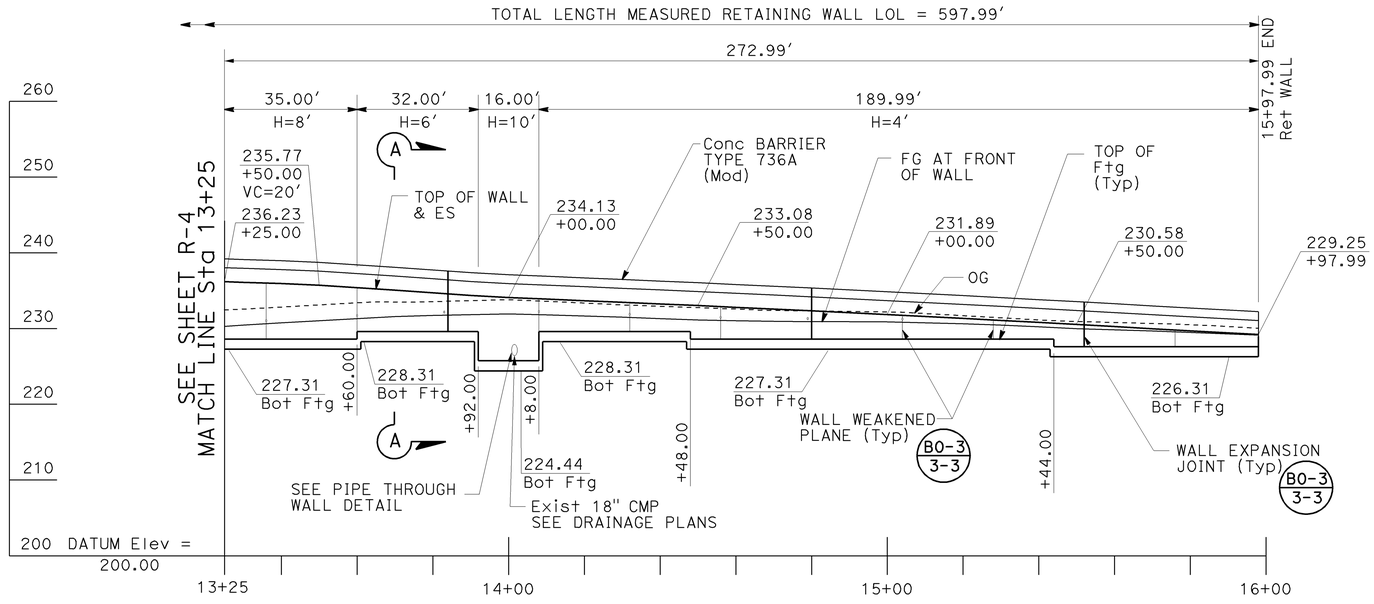

ELEVATION

SCALE: Horiz 1" = 20'
Vert 1" = 10'

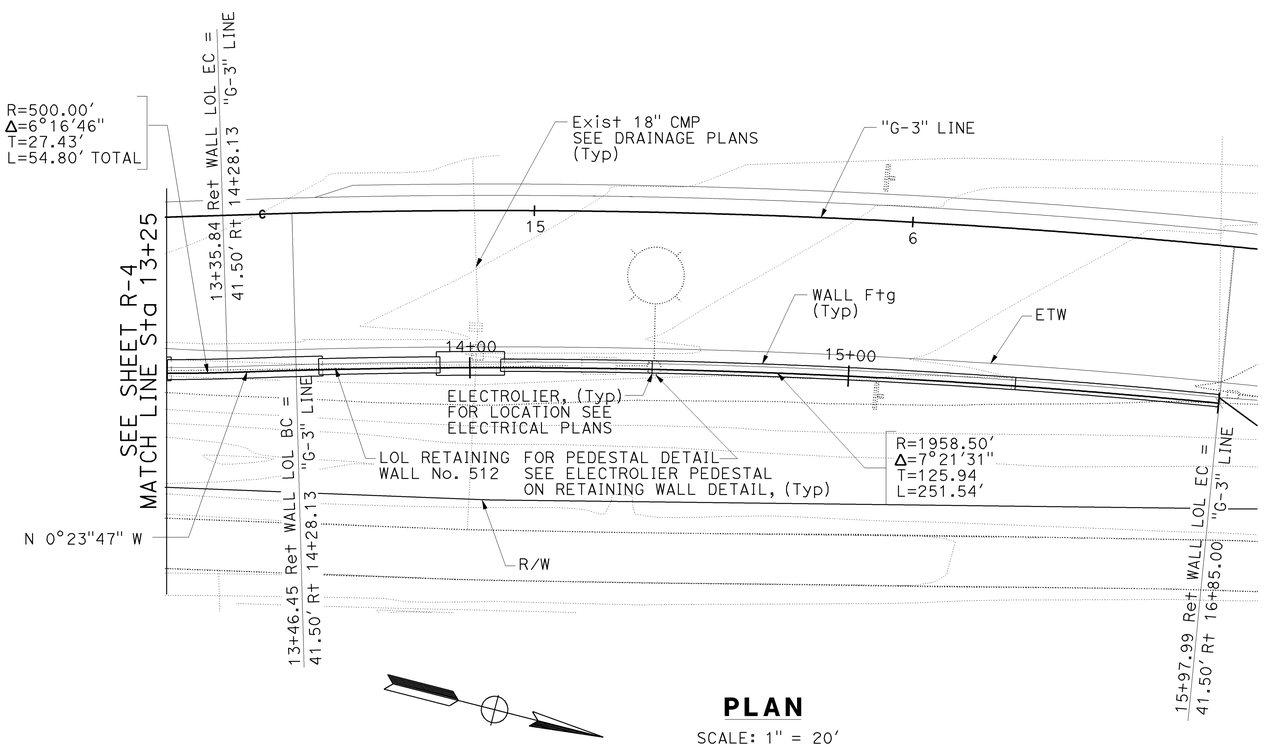

PLAN

SCALE: 1" = 20'

NOTE:

FOR EXCAVATION AND BACKFILL DETAILS, SEE LIMITS OF PAYMENT FOR RETAINING WALL EXCAVATION AND BACKFILL DETAIL.

THIS PLAN ACCURATE FOR RETAINING WALL WORK ONLY.

RETAINING WALL PLAN
WALL No. 512

SCALE: 1" = 20'

R-5

STATE OF CALIFORNIA - DEPARTMENT OF TRANSPORTATION
Caltrans

CONSULTANT FUNCTIONAL SUPERVISOR: PAUL YOUNG
CALCULATED-DESIGNED BY: KELLY GILLIS
CHECKED BY: CHAD HARDEN
REVISED BY
DATE REVISED

H:\pdata\10105878\Admin\submittals\2009-07-15 FINAL Electronic-Only Submittal\DGN rich1PLOT Files 2009-07-15 FINAL SUBMITTAL\c0F031qb002.dgn

LAST REVISION 08-01-08
DATE PLOTTED => 16-DEC-2009
TIME PLOTTED => 15:08

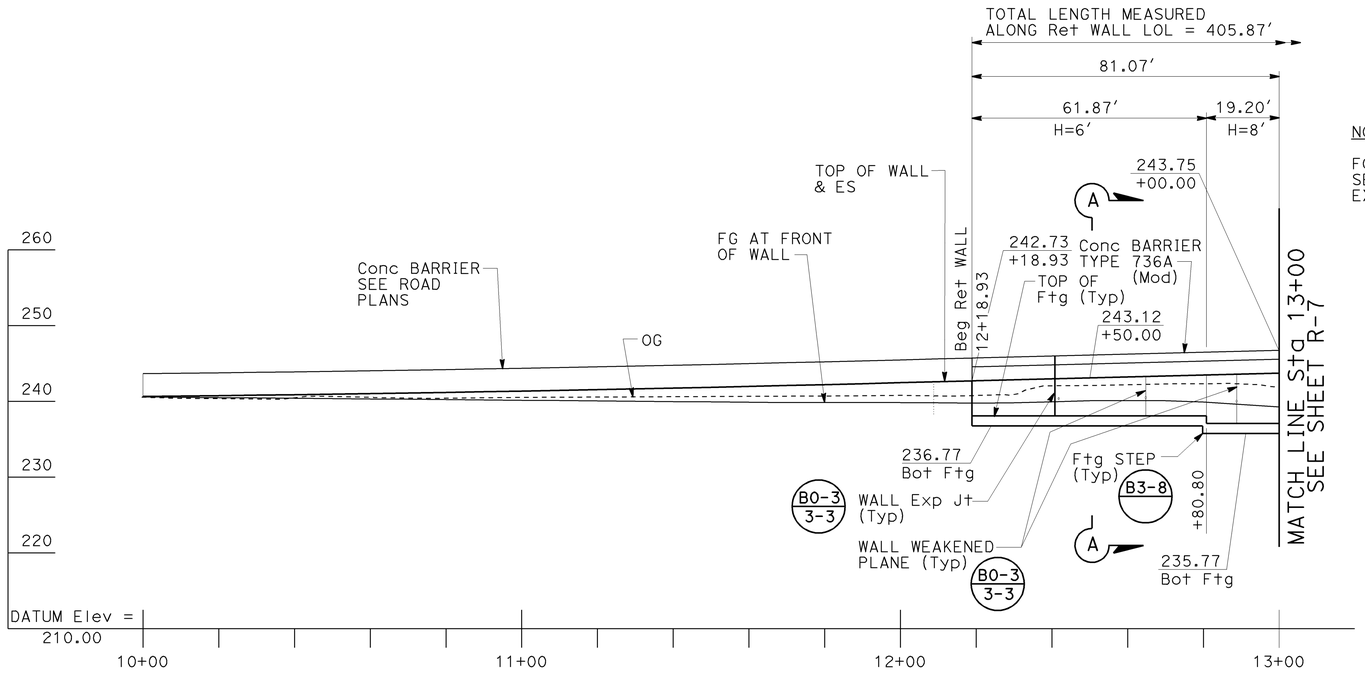

ELEVATION

SCALE: Horiz 1" = 20'
Vert 1" = 10'

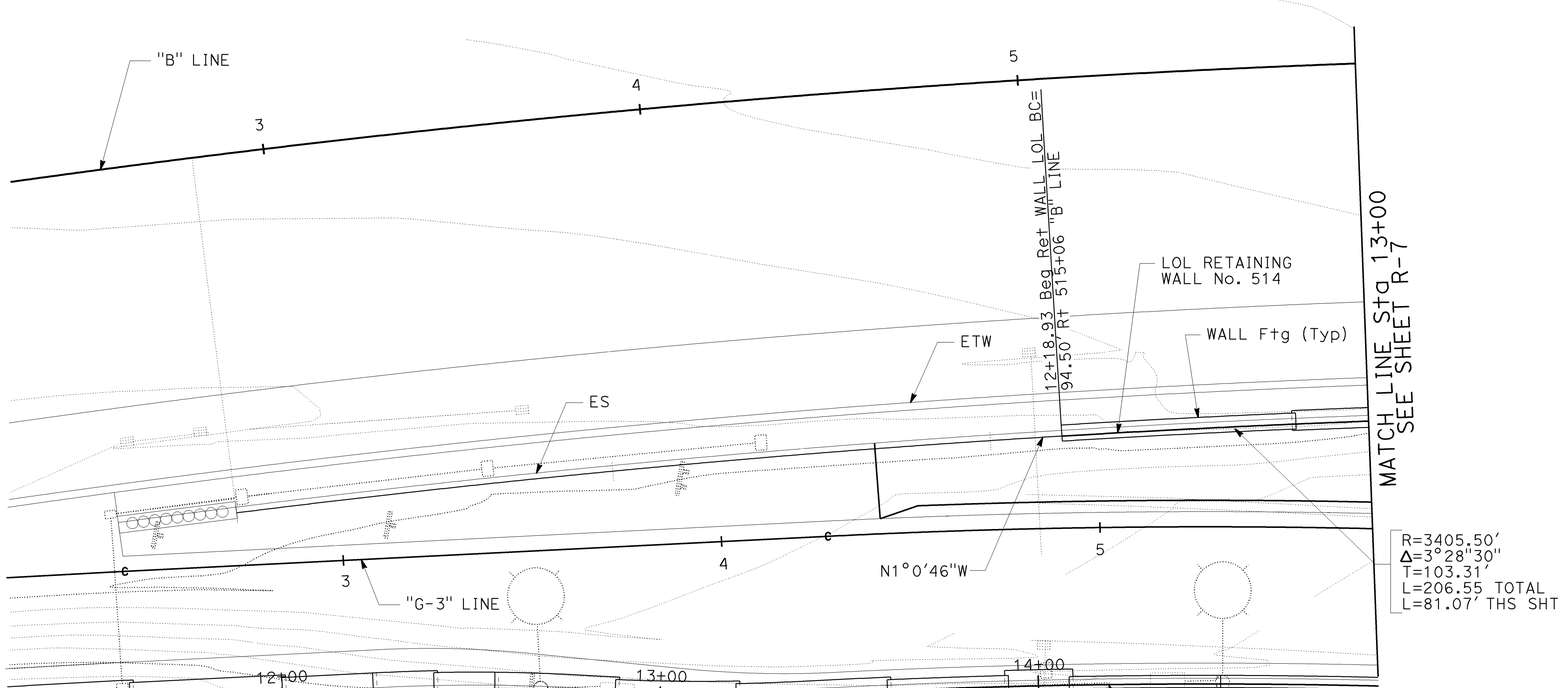

PLAN

SCALE: 1" = 20'

THIS PLAN ACCURATE FOR RETAINING WALL WORK ONLY.

NOTE:

FOR EXCAVATION AND BACKFILL DETAILS, SEE LIMITS OF PAYMENT FOR RETAINING WALL EXCAVATION AND BACKFILL DETAIL.

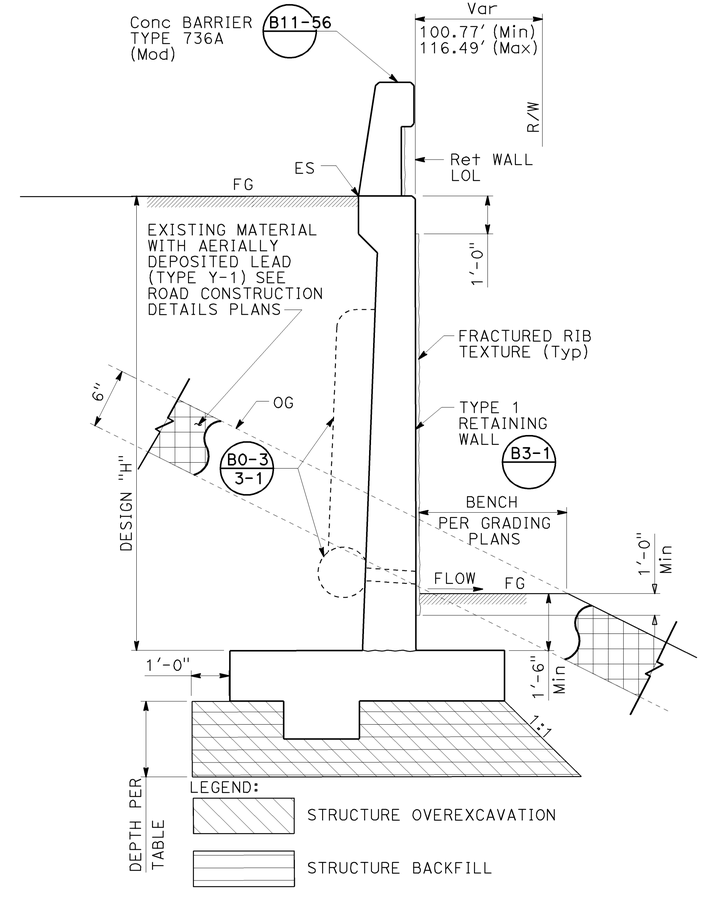

DESIGN "H"	OVER EXCAVATION DEPTH
6'-0" AND LESS	6"
8'-0"	1'-0"
10'-0"	2'-0"
14'-0"	3'-6"

SECTION A-A

NO SCALE

STANDARD PLAN SHEET No.

DETAIL No.

RETAINING WALL PLAN
WALL No. 514

SCALE: 1" = 20'

R-6

Dist	COUNTY	ROUTE	POST MILES TOTAL PROJECT	SHEET No.	TOTAL SHEETS
12	Ora	57	16.2/28.6	418	960

REGISTERED CIVIL ENGINEER — DATE 7/15/09

CHAD W. HARDEN No. 67648 Exp. 6-30-11 CIVIL — REGISTERED PROFESSIONAL ENGINEER — STATE OF CALIFORNIA

12-14-09
PLANS APPROVAL DATE

THE STATE OF CALIFORNIA OR ITS OFFICERS OR AGENTS SHALL NOT BE RESPONSIBLE FOR THE ACCURACY OR COMPLETENESS OF SCANNED COPIES OF THIS PLAN SHEET.

RBF CONSULTING
14275 ALTON PKWY
IRVINE, CA 92618

OCTA
550 S. MAIN STREET
ORANGE, CA 92863

REVISED BY	DATE REVISED

CALCULATED-DESIGNED BY: KELLY GILLIS
CHECKED BY: CHAD HARDEN
CONSULTANT FUNCTIONAL SUPERVISOR: PAUL YOUNG
DRAINAGE COORDINATOR:

STATE OF CALIFORNIA - DEPARTMENT OF TRANSPORTATION
Caltrans

H:\pdata\10105878\Admin\submittals\2009-07-15 FINAL Electronic-Only Submittal\DGN\c0F031qc001.dgn
DGN created PLOT Files 2009-07-15 5:08 SUBMITTAL

LAST REVISION DATE PLOTTED => 16-DEC-2009
08-01-08 TIME PLOTTED => 15:08

BORDER LAST REVISED 4/11/2008

RELATIVE BORDER SCALE IS IN INCHES 0 1 2 3

USERNAME => trrichf
DGN FILE => c0F031qc001.dgn

CU 12220

EA 0F0311

Dist	COUNTY	ROUTE	POST MILES TOTAL PROJECT	SHEET No.	TOTAL SHEETS
12	Ora	57	16.2/28.6	419	960

REGISTERED CIVIL ENGINEER 7/15/09 DATE

12-14-09
PLANS APPROVAL DATE

REGISTERED PROFESSIONAL ENGINEER CHAD W. HARDEN No. 67648 Exp. 6-30-11 CIVIL STATE OF CALIFORNIA

THE STATE OF CALIFORNIA OR ITS OFFICERS OR AGENTS SHALL NOT BE RESPONSIBLE FOR THE ACCURACY OR COMPLETENESS OF SCANNED COPIES OF THIS PLAN SHEET.

RBF CONSULTING
14275 ALTON PKWY
IRVINE, CA 92618

OCTA
550 S. MAIN STREET
ORANGE, CA 92863

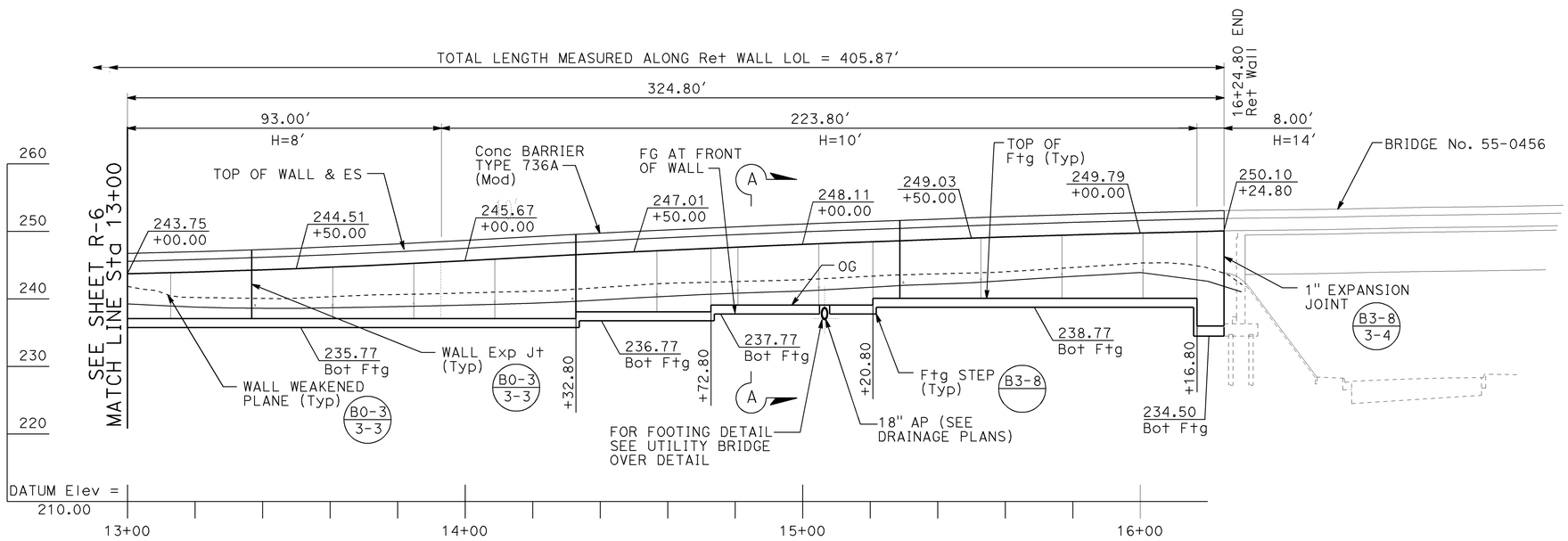

ELEVATION

SCALE: Horiz 1" = 20'
Vert 1" = 10'

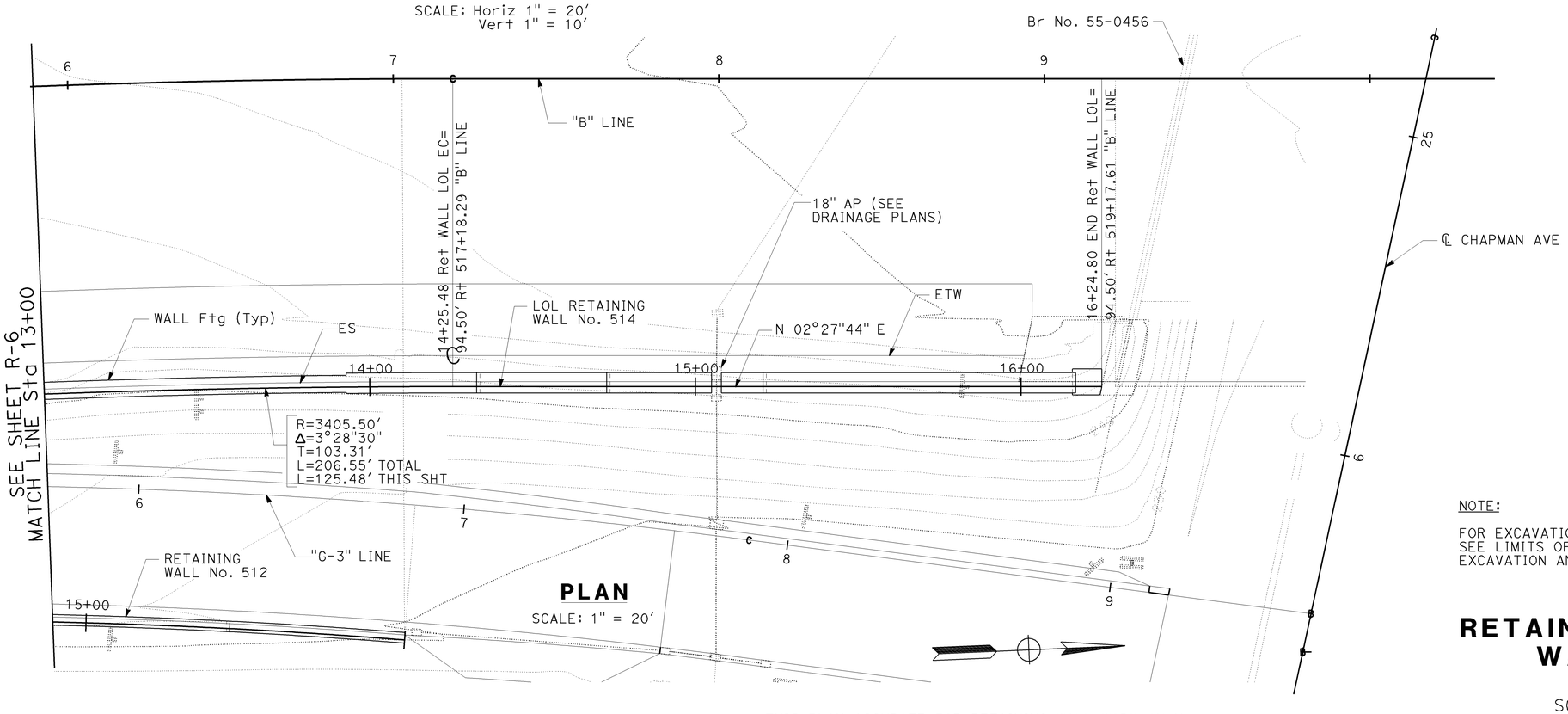

PLAN

SCALE: 1" = 20'

NOTE:

FOR EXCAVATION AND BACKFILL DETAILS, SEE LIMITS OF PAYMENT FOR RETAINING WALL EXCAVATION AND BACKFILL DETAIL.

RETAINING WALL PLAN
WALL No. 514

SCALE: 1" = 20'

R-7

THIS PLAN ACCURATE FOR RETAINING WALL WORK ONLY.

STATE OF CALIFORNIA - DEPARTMENT OF TRANSPORTATION
Caltrans
CONSULTANT FUNCTIONAL SUPERVISOR: PAUL YOUNG
CALCULATED-DESIGNED BY: KELLY GILLIS
CHECKED BY: CHAD HARDEN
REVISED BY
DATE REVISED

H:\pdata\10105878\Admin\submittals\2009-07-15 FINAL Electronic-Only Submittal\DGN\rrichf\PLOT Files 2009-07-15 FINAL SUBMITTAL\c0F031qc002.dgn

LAST REVISION 08-01-08
DATE PLOTTED => 16-DEC-2009
TIME PLOTTED => 15:08

Dist	COUNTY	ROUTE	POST MILES TOTAL PROJECT	SHEET No.	TOTAL SHEETS
12	Ora	57	16.2/28.6	420	960

REGISTERED CIVIL ENGINEER — DATE 7/15/09

12-14-09
PLANS APPROVAL DATE

REGISTERED PROFESSIONAL ENGINEER — CHAD W. HARDEN — No. 67648 — Exp. 6-30-11 — CIVIL — STATE OF CALIFORNIA

THE STATE OF CALIFORNIA OR ITS OFFICERS OR AGENTS SHALL NOT BE RESPONSIBLE FOR THE ACCURACY OR COMPLETENESS OF SCANNED COPIES OF THIS PLAN SHEET.

RBF CONSULTING
14275 ALTON PKWY
IRVINE, CA 92618

OCTA
550 S. MAIN STREET
ORANGE, CA 92863

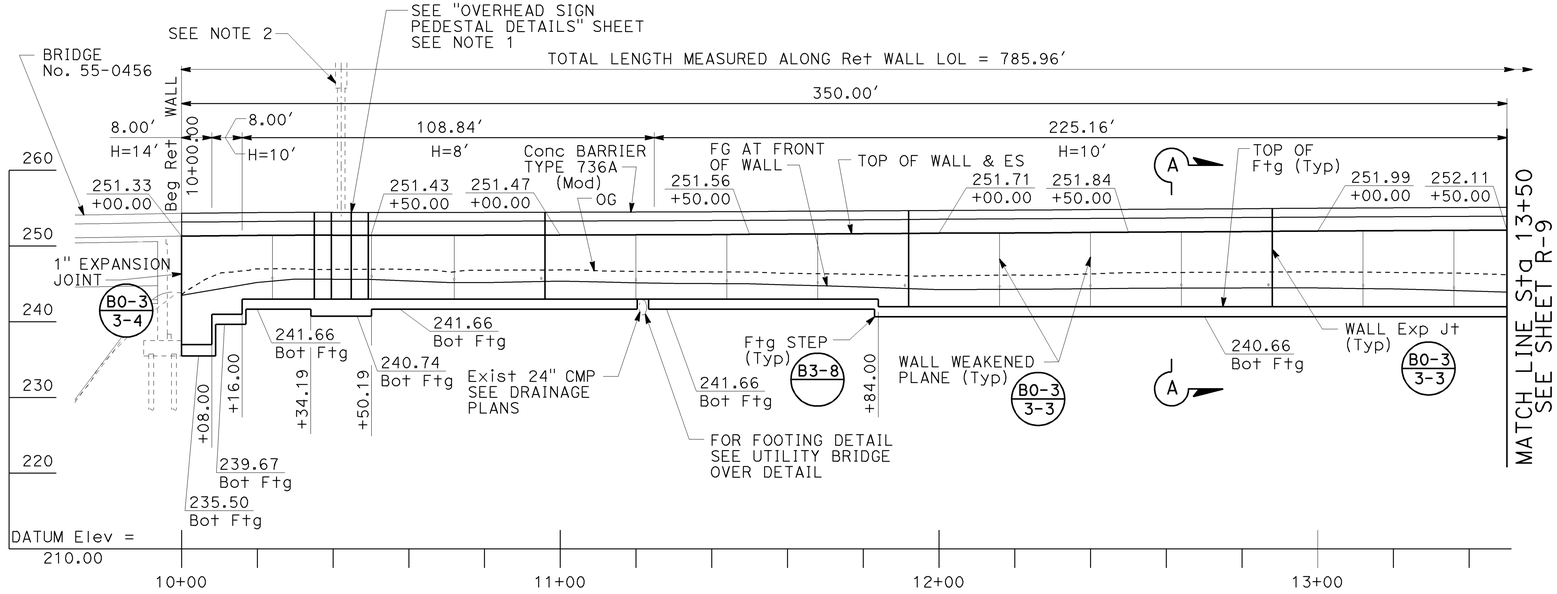

ELEVATION

SCALE: Horiz 1" = 20'
Vert 1" = 10'

ADL TABLE

WALL LOL STATION	DEPTH OF EXIST ADL
10+00.00 TO 12+22.55	6"
12+22.55 TO 17+85.96	4'-0"

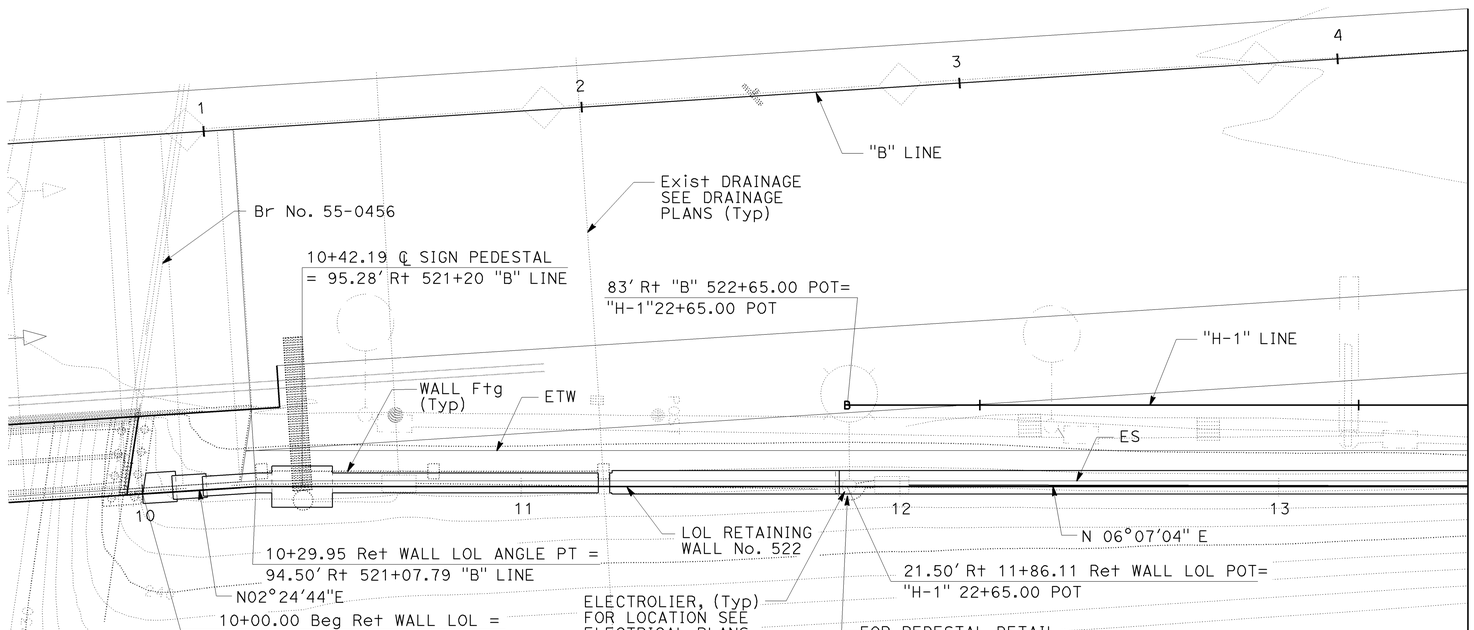

PLAN

SCALE: 1" = 20'

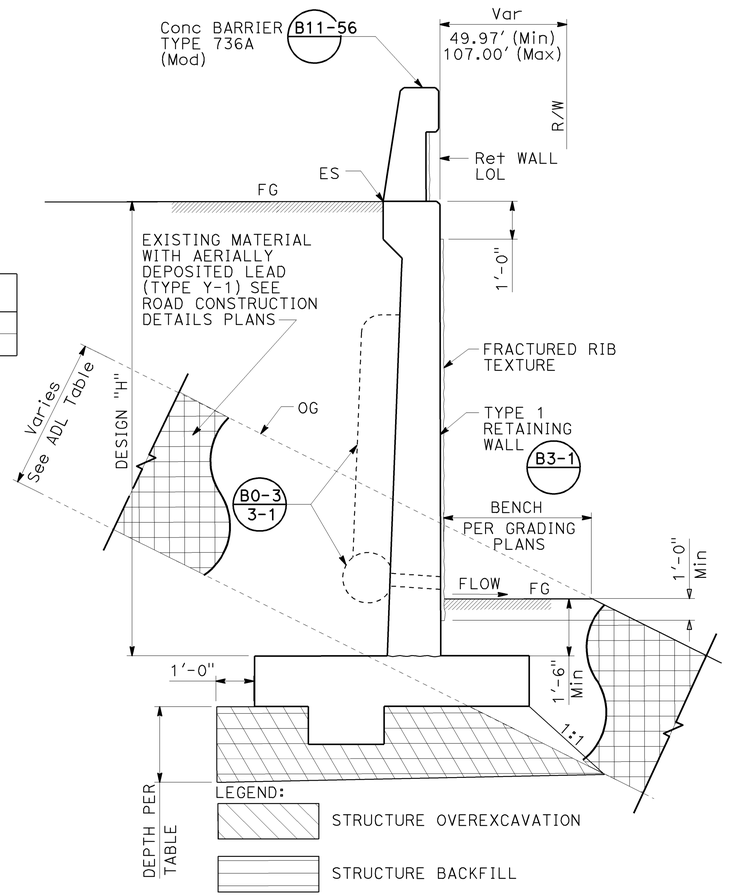

DESIGN "H"	OVER EXCAVATION DEPTH
6'-0" AND LESS	6"
8'-0"	1'-6"
10'-0"	2'-0"
12'-0"	4'-0"
14'-0"	4'-0"

SECTION A-A

NO SCALE

STANDARD PLAN SHEET No.
DETAIL No.

NOTES:

1. FOR SIGN LOCATION AND DETAILS, SEE SIGN PLANS AND SIGN DETAILS SHEETS.
2. FOR EXCAVATION AND BACKFILL DETAILS, SEE LIMITS OF PAYMENT FOR RETAINING WALL EXCAVATION AND BACKFILL DETAIL.

THIS PLAN ACCURATE FOR RETAINING WALL WORK ONLY.

RETAINING WALL PLAN WALL No. 522

SCALE: 1" = 20' **R-8**

CALCULATED-DESIGNED BY: KELLY GILLIS
CHECKED BY: CHAD HARDEN
CONSULTANT FUNCTIONAL SUPERVISOR: PAUL YOUNG
REVISED BY | DATE REVISED

STATE OF CALIFORNIA - DEPARTMENT OF TRANSPORTATION
Caltrans

H:\pdata\10105878\Admin\submittals\2009-07-15 FINAL Electronic-Only Submittal\DGN\c0f031qd001.dgn
PLOT File: 16-DEC-2009 15:08 SUBMITTAL \c0F031qd001.dgn

LAST REVISION | DATE PLOTTED => 16-DEC-2009
08-01-08 | TIME PLOTTED => 15:08

BORDER LAST REVISED 4/11/2008 | RELATIVE BORDER SCALE IS IN INCHES 0 1 2 3 | USERNAME => trrichf | DGN FILE => c0F031qd001.dgn | CU 12220 | EA 0F0311

Dist	COUNTY	ROUTE	POST MILES TOTAL PROJECT	SHEET No.	TOTAL SHEETS
12	Ora	57	16.2/18.6	421	960

REGISTERED CIVIL ENGINEER 7/15/09 DATE

12-14-09
PLANS APPROVAL DATE

REGISTERED PROFESSIONAL ENGINEER CHAD W. HARDEN No. 67648 Exp. 6-30-11 CIVIL STATE OF CALIFORNIA

THE STATE OF CALIFORNIA OR ITS OFFICERS OR AGENTS SHALL NOT BE RESPONSIBLE FOR THE ACCURACY OR COMPLETENESS OF SCANNED COPIES OF THIS PLAN SHEET.

RBF CONSULTING
14275 ALTON PKWY
IRVINE, CA 92618

OCTA
550 S. MAIN STREET
ORANGE, CA 92863

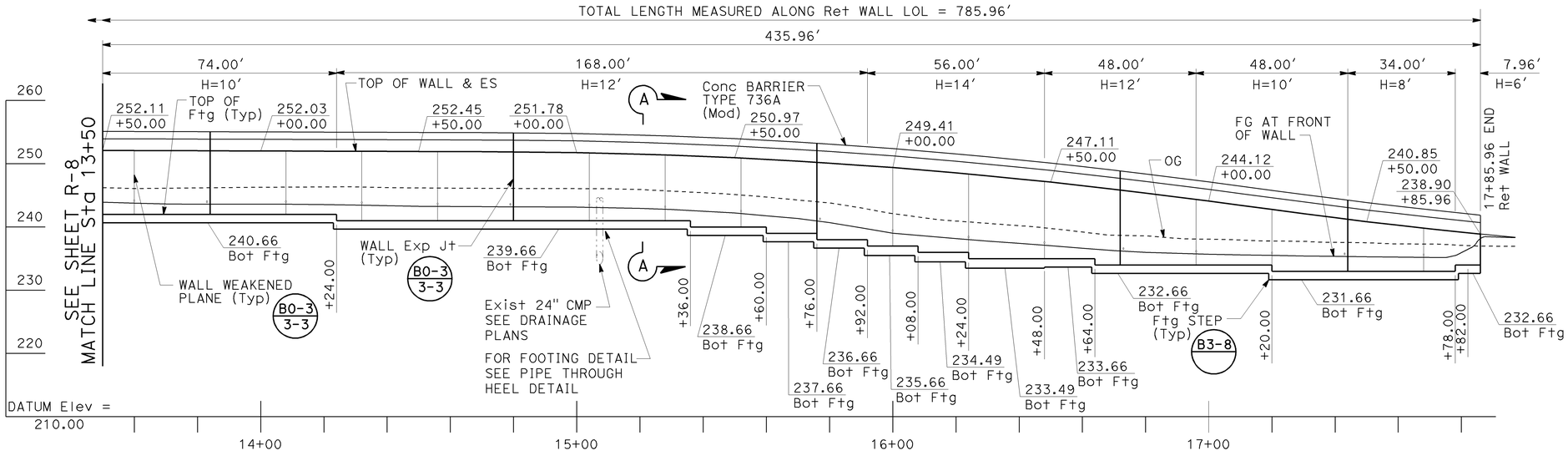

ELEVATION

SCALE: Horiz 1" = 20'
Vert 1" = 10'

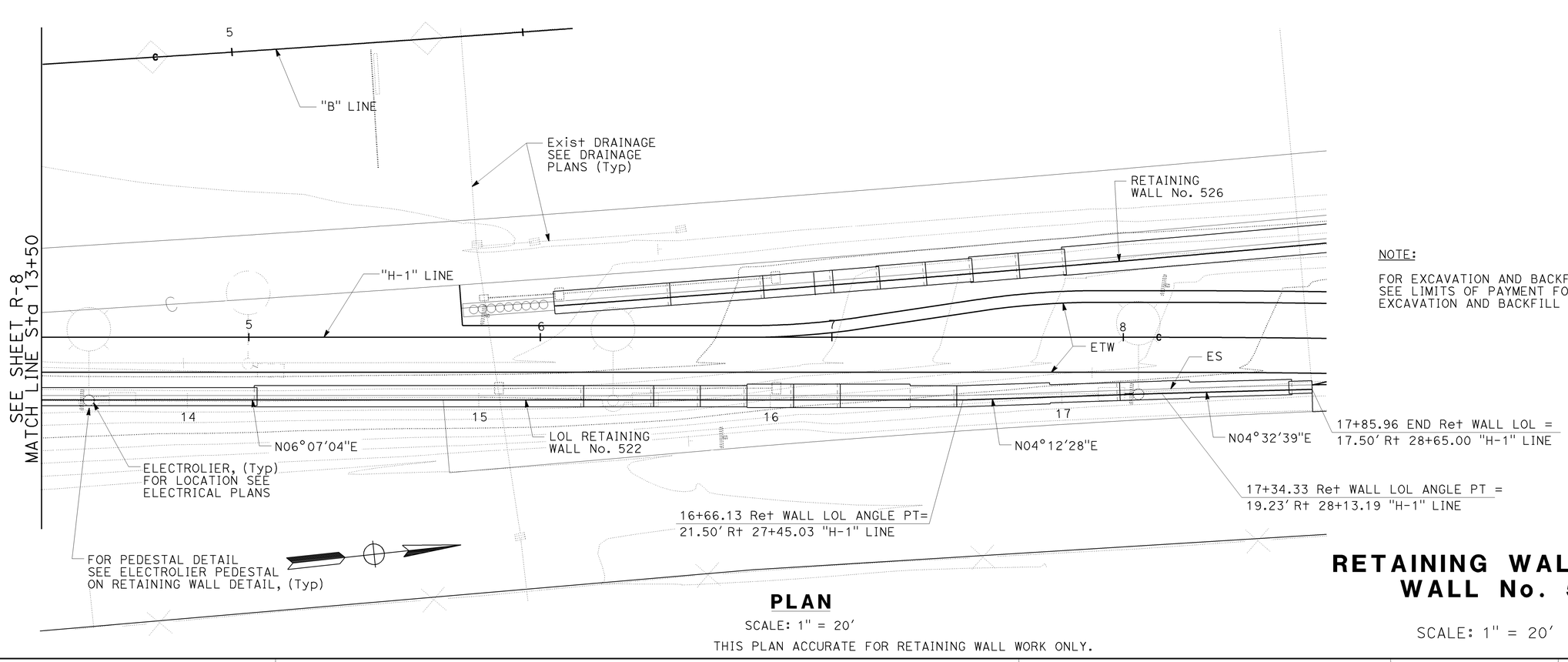

PLAN

SCALE: 1" = 20'

THIS PLAN ACCURATE FOR RETAINING WALL WORK ONLY.

NOTE:

FOR EXCAVATION AND BACKFILL DETAILS, SEE LIMITS OF PAYMENT FOR RETAINING WALL EXCAVATION AND BACKFILL DETAIL.

RETAINING WALL PLAN
WALL No. 522

SCALE: 1" = 20'

R-9

STATE OF CALIFORNIA - DEPARTMENT OF TRANSPORTATION
Caltrans

CONSULTANT FUNCTIONAL SUPERVISOR: PAUL YOUNG
CALCULATED-DESIGNED BY: KELLY GILLIS
CHECKED BY: CHAD HARDEN
REVISED BY
DATE REVISED

H:\pdata\10105878\Admin\submittals\2009-07-15 FINAL Electronic-Only Submittal\DGN\rmnguye\PLOT Files 2009-07-15 FINAL SUBMITTAL\c0F031qd002.dgn

LAST REVISION 08-01-08
DATE PLOTTED => 16-DEC-2009
TIME PLOTTED => 14:30

Dist	COUNTY	ROUTE	POST MILES TOTAL PROJECT	SHEET No.	TOTAL SHEETS
12	Ora	57	16.2/18.6	422	960

REGISTERED CIVIL ENGINEER — DATE 7/15/09

12-14-09
PLANS APPROVAL DATE

REGISTERED PROFESSIONAL ENGINEER — CHAD W. HARDEN — No. 67648 — Exp. 6-30-11 — CIVIL — STATE OF CALIFORNIA

THE STATE OF CALIFORNIA OR ITS OFFICERS OR AGENTS SHALL NOT BE RESPONSIBLE FOR THE ACCURACY OR COMPLETENESS OF SCANNED COPIES OF THIS PLAN SHEET.

RBF CONSULTING
14275 ALTON PKWY
IRVINE, CA 92618

OCTA
550 S. MAIN STREET
ORANGE, CA 92863

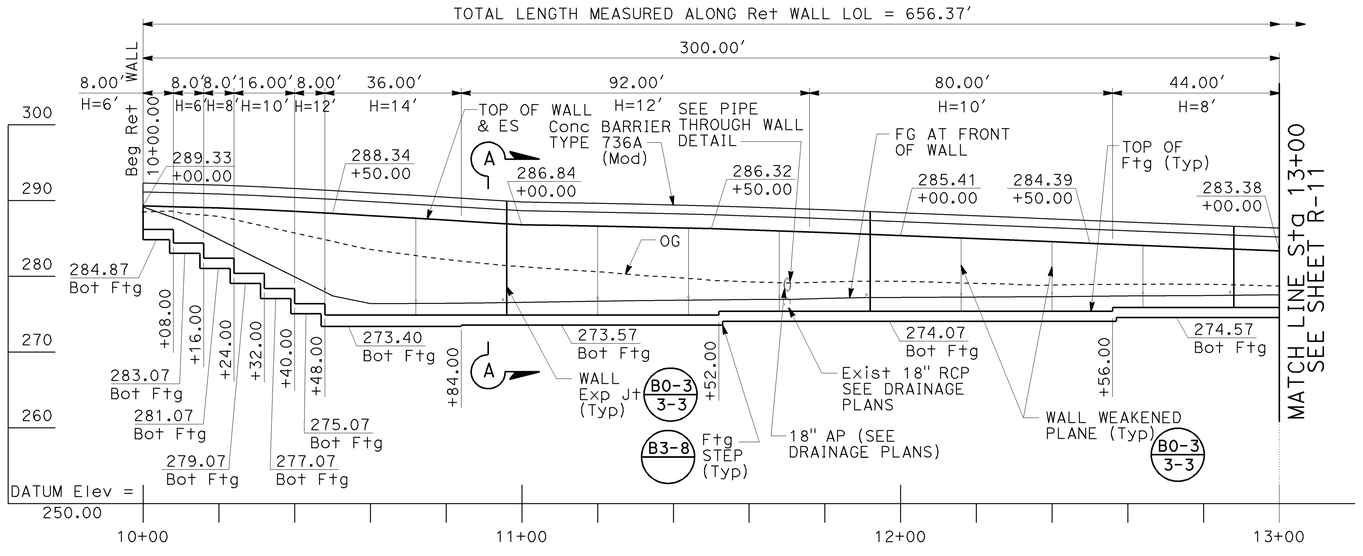

ELEVATION

SCALE: Horiz 1" = 20'
Vert 1" = 10'

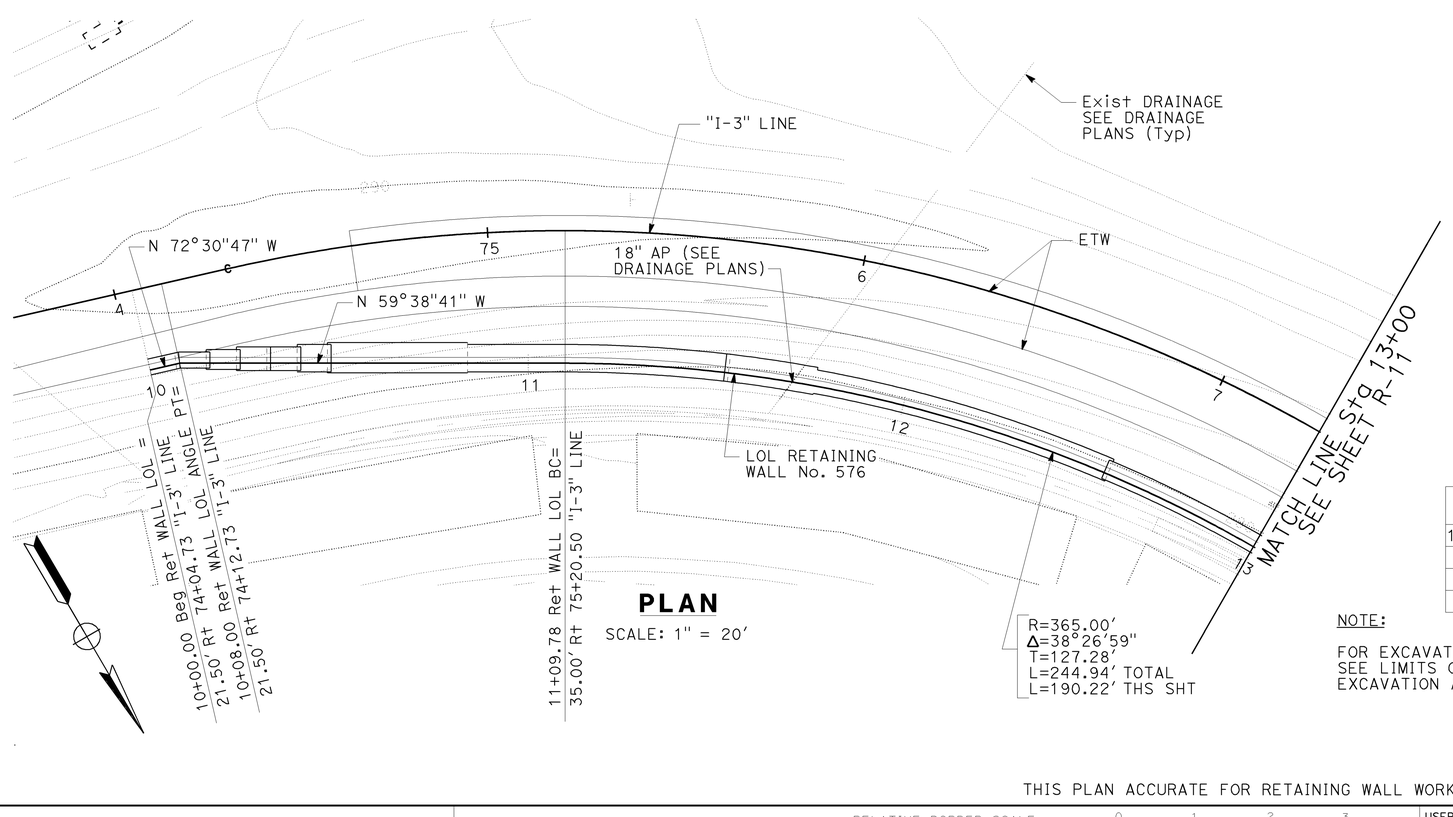

PLAN

SCALE: 1" = 20'

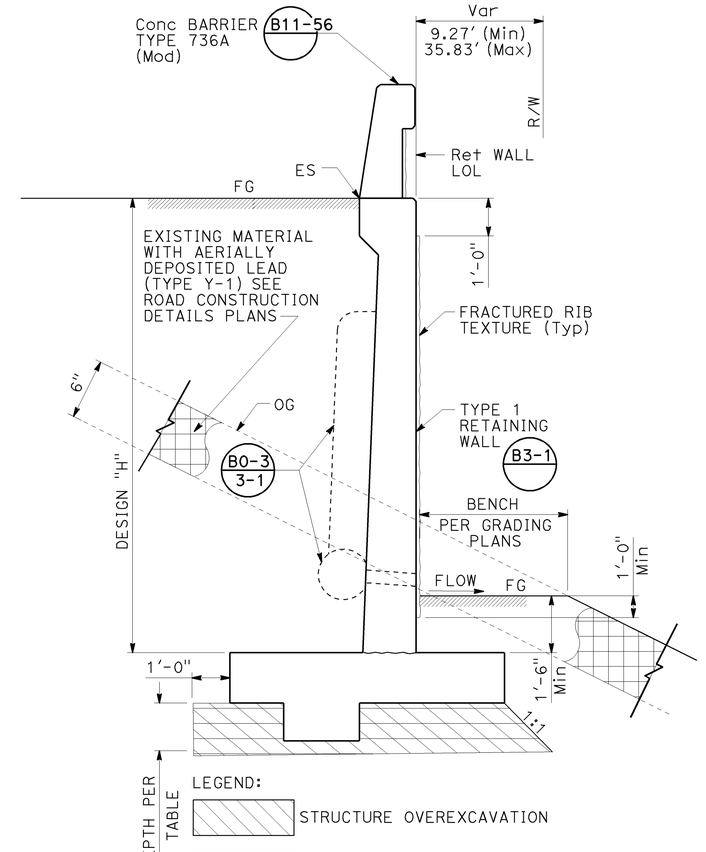

DESIGN "H"	OVER EXCAVATION DEPTH
10'-0" AND LESS	6"
12'-0"	1'-0"
14'-0"	1'-0"

NOTE:

FOR EXCAVATION AND BACKFILL DETAILS, SEE LIMITS OF PAYMENT FOR RETAINING WALL EXCAVATION AND BACKFILL DETAIL.

SECTION A-A

NO SCALE

STANDARD PLAN SHEET No.
DETAIL No.

RETAINING WALL PLAN WALL No. 576

SCALE: 1" = 20'

R-10

THIS PLAN ACCURATE FOR RETAINING WALL WORK ONLY.

H:\pdata\10105878\Admin\submittals\2009-07-15 FINAL Electronic-Only Submittal\DGN\ranguye01.DGN 15-JUL-2009 14:30:51 FINAL SUBMITTAL \c0F031qe001.dgn

STATE OF CALIFORNIA - DEPARTMENT OF TRANSPORTATION	CONSULTANT FUNCTIONAL SUPERVISOR	CALCULATED-DESIGNED BY	CHECKED BY	REVISED BY	DATE REVISED
Caltrans	PAUL YOUNG	KELLY GILLIS	CHAD HARDEN		

LAST REVISION DATE PLOTTED => 16-DEC-2009
TIME PLOTTED => 14:30
08-01-08

BORDER LAST REVISED 4/11/2008 — RELATIVE BORDER SCALE IS IN INCHES 0 1 2 3 — USERNAME => trmnguye — DGN FILE => c0F031qe001.dgn — CU 12220 — EA 0F0311

Dist	COUNTY	ROUTE	POST MILES TOTAL PROJECT	SHEET No.	TOTAL SHEETS
12	Ora	57	16.2/18.6	423	960

REGISTERED CIVIL ENGINEER — DATE 7/15/09

CHAD W. HARDEN No. 67648 Exp. 6-30-11 CIVIL — REGISTERED PROFESSIONAL ENGINEER — STATE OF CALIFORNIA

12-14-09
PLANS APPROVAL DATE

THE STATE OF CALIFORNIA OR ITS OFFICERS OR AGENTS SHALL NOT BE RESPONSIBLE FOR THE ACCURACY OR COMPLETENESS OF SCANNED COPIES OF THIS PLAN SHEET.

RBF CONSULTING
14275 ALTON PKWY
IRVINE, CA 92618

OCTA
550 S. MAIN STREET
ORANGE, CA 92863

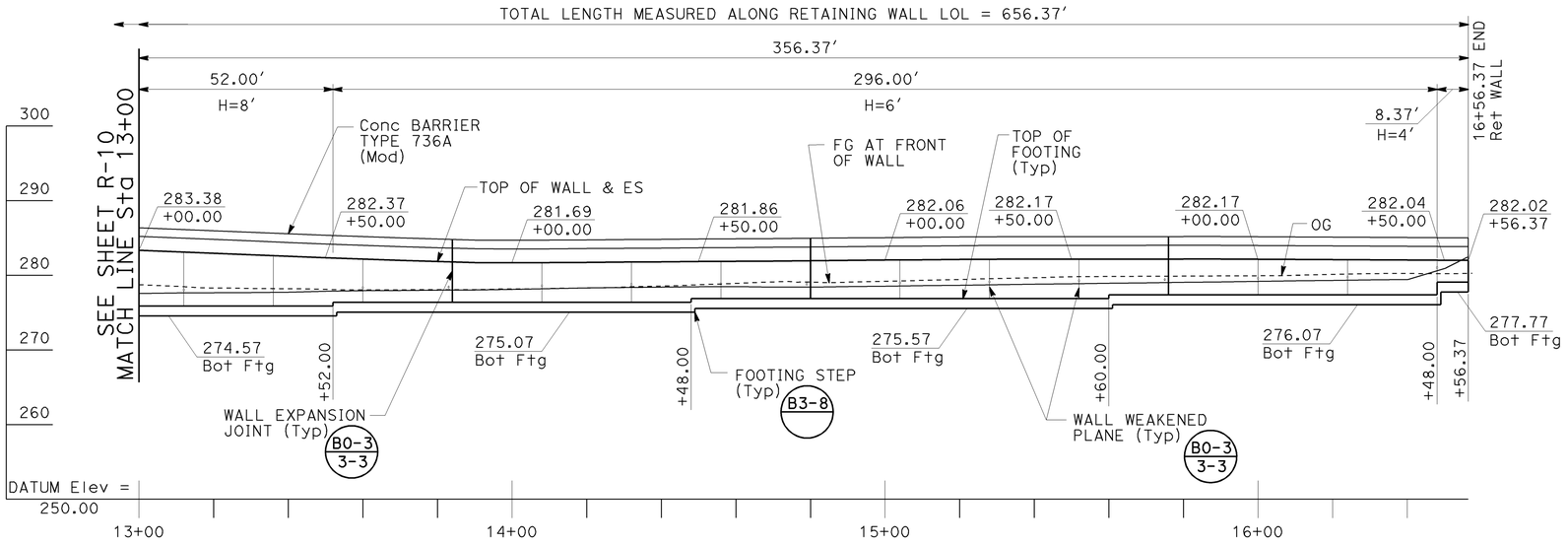

ELEVATION

SCALE: Horiz 1" = 20'
Vert 1" = 10'

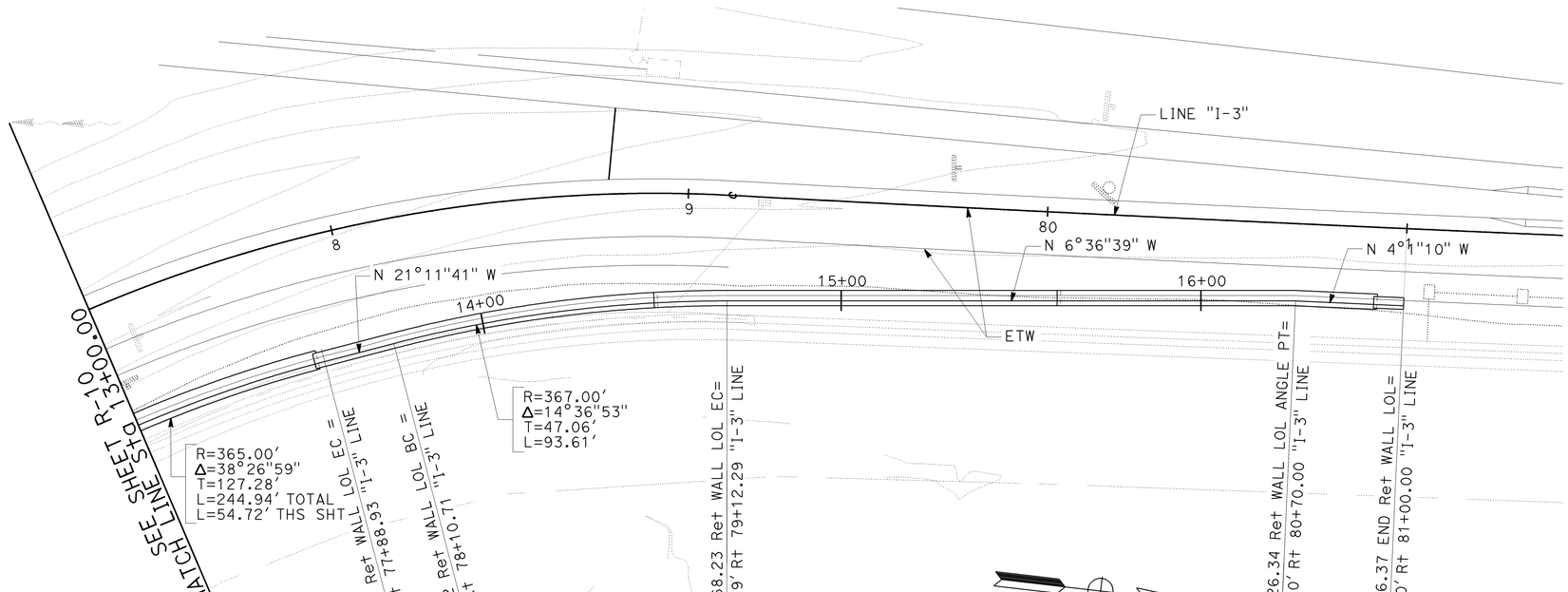

PLAN

SCALE: 1" = 20'

THIS PLAN ACCURATE FOR RETAINING WALL WORK ONLY.

NOTE:

FOR EXCAVATION AND BACKFILL DETAILS, SEE LIMITS OF PAYMENT FOR RETAINING WALL EXCAVATION AND BACKFILL DETAIL.

RETAINING WALL PLAN
WALL No. 576

SCALE: 1" = 20'

R-11

LAST REVISION DATE PLOTTED => 16-DEC-2009
TIME PLOTTED => 14:30
08-01-08

STATE OF CALIFORNIA - DEPARTMENT OF TRANSPORTATION
Caltrans

CONSULTANT FUNCTIONAL SUPERVISOR: PAUL YOUNG
CALCULATED-DESIGNED BY: KELLY GILLIS
CHECKED BY: CHAD HARDEN

DATE REVISED	REVISED BY
07-15-09	FINAL SUBMITTAL

H:\pdata\10105878\Admin\submittals\2009-07-15 FINAL Electronic-Only Submittal\DGN\rangu\ye\LOT File\6 2009-07-15 14:30:51 c0F031qe002.dgn

BORDER LAST REVISED 4/11/2008

RELATIVE BORDER SCALE IS IN INCHES 0 1 2 3

USERNAME => trmnguye
DGN FILE => c0F031qe002.dgn

CU 12220

EA 0F0311

Dist	COUNTY	ROUTE	POST MILES TOTAL PROJECT	SHEET No.	TOTAL SHEETS
12	Ora	57	16.2/18.6	424	960

REGISTERED CIVIL ENGINEER — 7/15/09 DATE

12-14-09
PLANS APPROVAL DATE

REGISTERED PROFESSIONAL ENGINEER
CHAD W. HARDEN
No. 67648
Exp. 6-30-11
CIVIL
STATE OF CALIFORNIA

THE STATE OF CALIFORNIA OR ITS OFFICERS OR AGENTS SHALL NOT BE RESPONSIBLE FOR THE ACCURACY OR COMPLETENESS OF SCANNED COPIES OF THIS PLAN SHEET.

RBF CONSULTING
14275 ALTON PKWY
IRVINE, CA 92618

OCTA
550 S. MAIN STREET
ORANGE, CA 92863

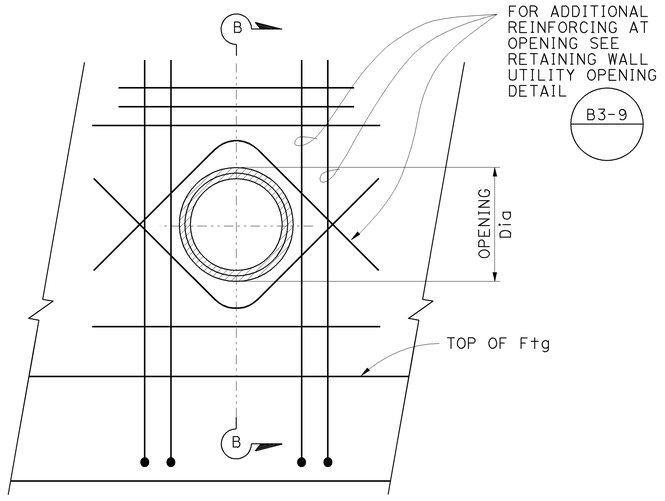

ELEVATION

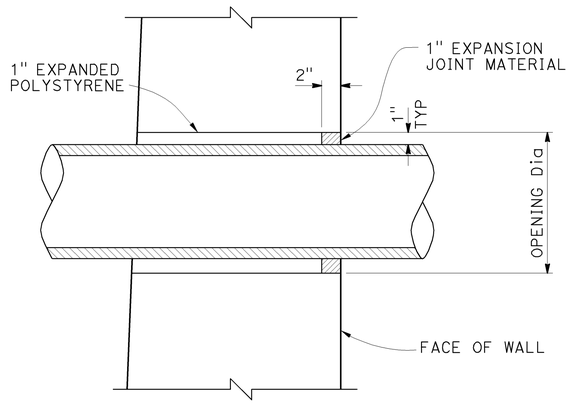

SECTION B-B

PIPE THROUGH WALL DETAIL

NO SCALE

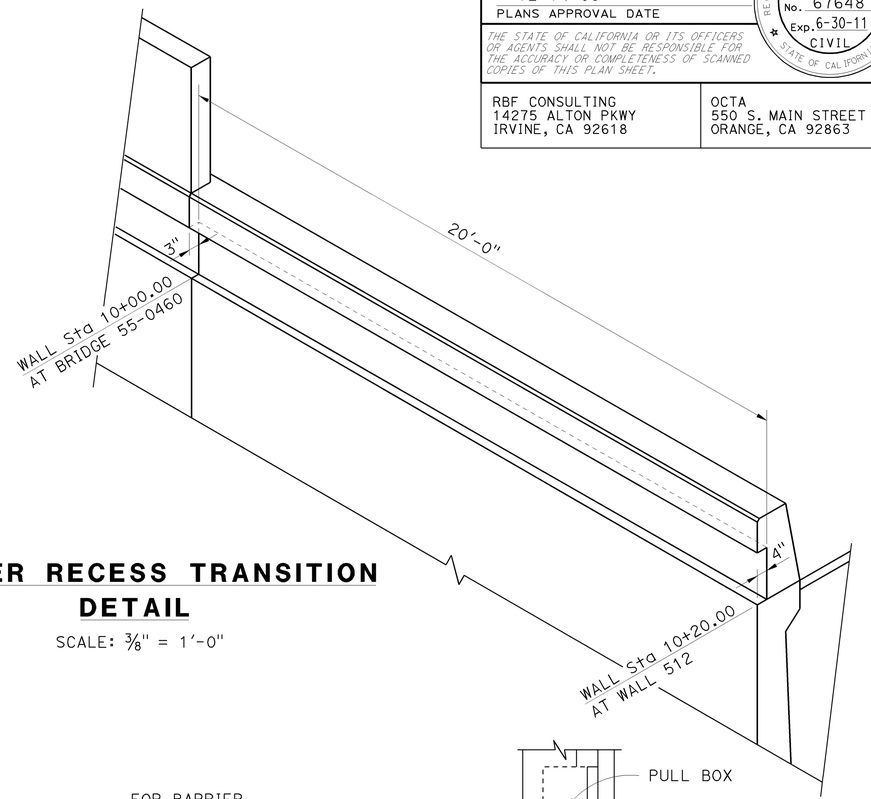

BARRIER RECESS TRANSITION DETAIL

SCALE: 3/8" = 1'-0"

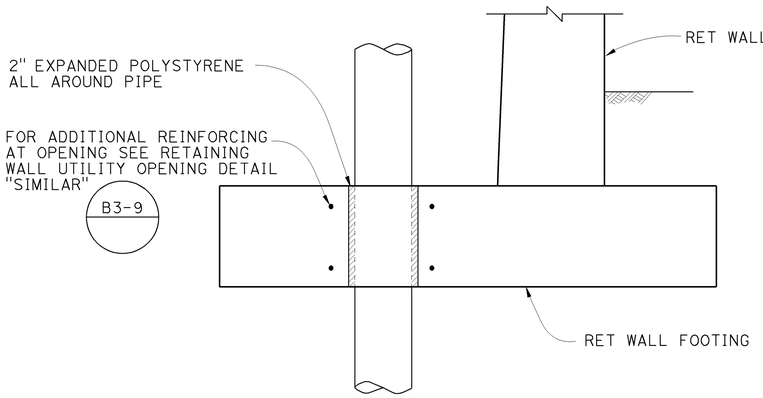

PIPE THROUGH HEEL DETAIL

NO SCALE

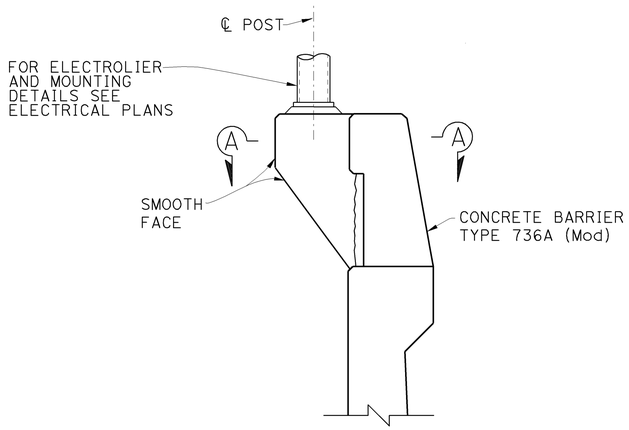

ELEVATION

NOTE: FOR ADDITIONAL INFORMATION, SEE B11-58

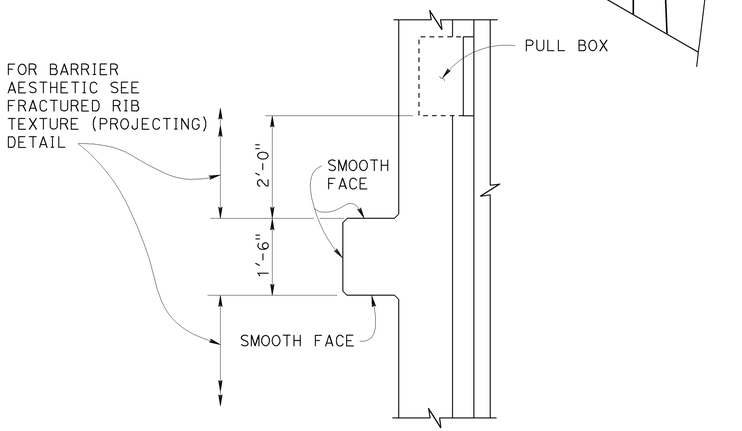

SECTION A-A

NO SCALE

ELECTROLIER PEDESTAL ON RETAINING WALL

NO SCALE

RETAINING WALL DETAILS MISCELLANEOUS DETAILS No. 1

NO SCALE **R-12**

THIS PLAN ACCURATE FOR RETAINING WALL WORK ONLY.

LAST REVISION DATE PLOTTED => 16-DEC-2009
08-01-08 TIME PLOTTED => 14:30

H:\pdata\10105878\Admin\submittals\2009-07-15 FINAL Electronic-Only Submittal\DGN\manguye0F031qe003.dgn

STATE OF CALIFORNIA - DEPARTMENT OF TRANSPORTATION
Caltrans

CHECKED BY	CALCULATED-DESIGNED BY	REVISED BY	DATE REVISED
CHAD HARDEN	KELLY GILLIS		

CONSULTANT FUNCTIONAL SUPERVISOR: PAUL YOUNG

BORDER LAST REVISED 4/11/2008

RELATIVE BORDER SCALE IS IN INCHES 0 1 2 3

USERNAME => trmnguye
DGN FILE => c0F031qe003.dgn

CU 12220

EA 0F0311

Dist	COUNTY	ROUTE	POST MILES TOTAL PROJECT	SHEET No.	TOTAL SHEETS
12	Ora	57	16.2/18.6	425	960

REGISTERED CIVIL ENGINEER 7/15/09 DATE

12-14-09
PLANS APPROVAL DATE

REGISTERED PROFESSIONAL ENGINEER CHAD W. HARDEN No. 67648 Exp. 6-30-11 CIVIL STATE OF CALIFORNIA

THE STATE OF CALIFORNIA OR ITS OFFICERS OR AGENTS SHALL NOT BE RESPONSIBLE FOR THE ACCURACY OR COMPLETENESS OF SCANNED COPIES OF THIS PLAN SHEET.

RBF CONSULTING
14275 ALTON PKWY
IRVINE, CA 92618

OCTA
550 S. MAIN STREET
ORANGE, CA 92863

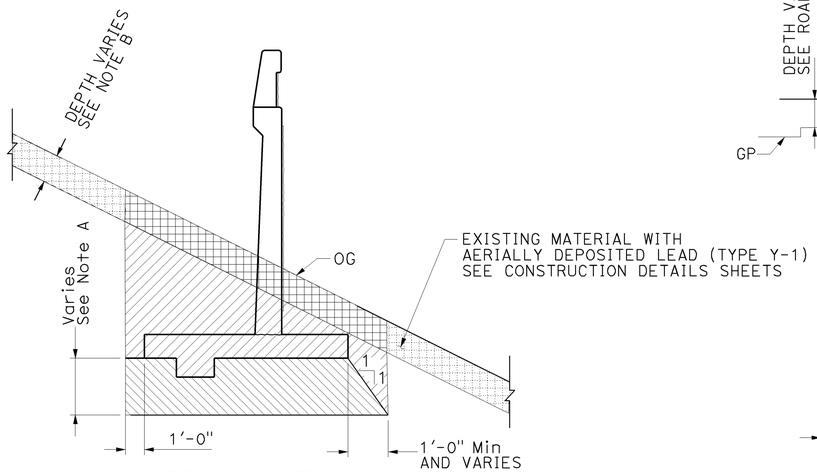

EXCAVATION
NO SCALE

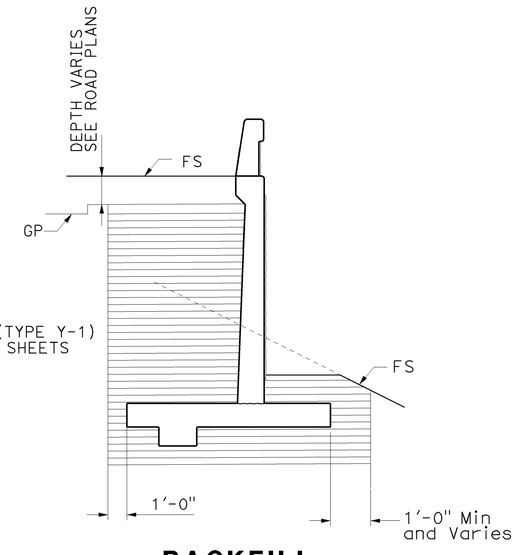

BACKFILL
NO SCALE

RETAINING WALL IN FILL AND CUT

LIMITS OF PAYMENT FOR RETAINING WALL EXCAVATION AND BACKFILL

LEGEND:

- STRUCTURE EXCAVATION
- STRUCTURE BACKFILL
- STRUCTURE OVEREXCAVATION SEE NOTE A
- STRUCTURE EXCAVATION (TYPE Y-1) (AERIALLY DEPOSITED LEAD)

NOTES

A. SEE RETAINING WALL TYPICAL SECTION(S) FOR DEPTH OF STRUCTURE OVEREXCAVATION.

B. SEE RETAINING WALL TYPICAL SECTION(S) FOR DEPTH OF EXISTING MATERIAL WITH AERIALLY DEPOSITED LEAD.

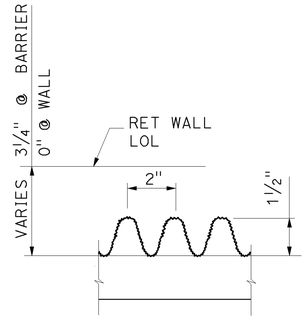

FRACTURED RIB TEXTURE (PROJECTING)
NO SCALE

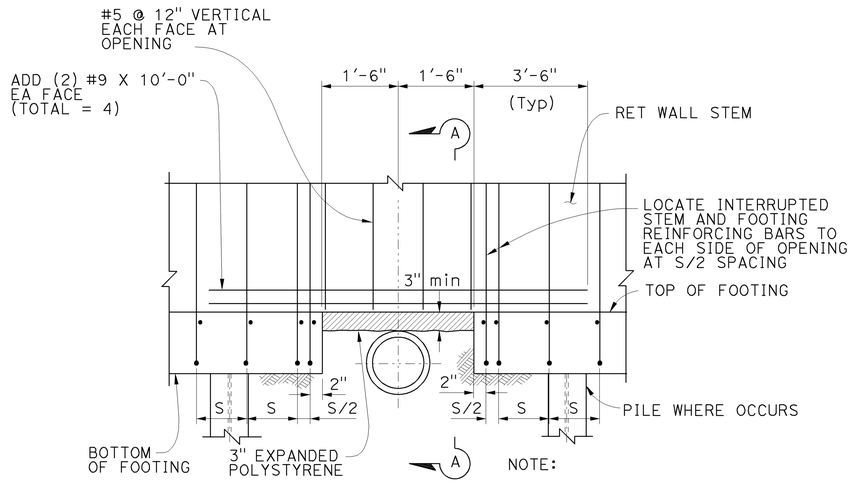

NOTE:
1. S = TYPICAL VERTICAL BAR SPACING.
2. DO NOT SPLICE HORIZONTAL WALL REINF ABOVE UTILITY BRIDGE.

UTILITY BRIDGE OVER DETAIL
NO SCALE

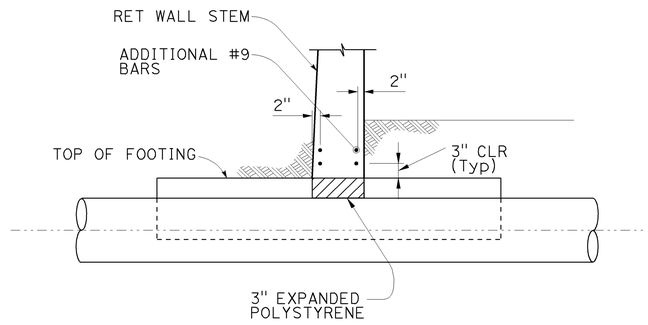

SECTION A-A
NO SCALE

RETAINING WALL DETAILS MISCELLANEOUS DETAILS No. 2

NO SCALE **R-13**

THIS PLAN ACCURATE FOR RETAINING WALL WORK ONLY.

STATE OF CALIFORNIA - DEPARTMENT OF TRANSPORTATION
Caltrans
CONSULTANT FUNCTIONAL SUPERVISOR: PAUL YOUNG
CALCULATED-DESIGNED BY: KELLY GILLIS
CHECKED BY: CHAD HARDEN
REVISED BY
DATE REVISED

H:\pdata\10105878\Admin\submittals\2009-07-15 FINAL Electronic-Only Submittal\DGN\rmnguye\PLOT Files\2009-07-15 FINAL SUBMITTAL\c0F031qe004.dgn

LAST REVISION 08-01-08
DATE PLOTTED => 16-DEC-2009
TIME PLOTTED => 14:30

Dist	COUNTY	ROUTE	POST MILES TOTAL PROJECT	SHEET No.	TOTAL SHEETS
12	Ora	57	16.2/18.6	426	960

REGISTERED CIVIL ENGINEER — DATE 7/15/09

CHAD W. HARDEN, No. 67648, Exp. 6-30-11, CIVIL, REGISTERED PROFESSIONAL ENGINEER, STATE OF CALIFORNIA

12-14-09
PLANS APPROVAL DATE

THE STATE OF CALIFORNIA OR ITS OFFICERS OR AGENTS SHALL NOT BE RESPONSIBLE FOR THE ACCURACY OR COMPLETENESS OF SCANNED COPIES OF THIS PLAN SHEET.

RBF CONSULTING
14275 ALTON PKWY
IRVINE, CA 92618

OCTA
550 S. MAIN STREET
ORANGE, CA 92863

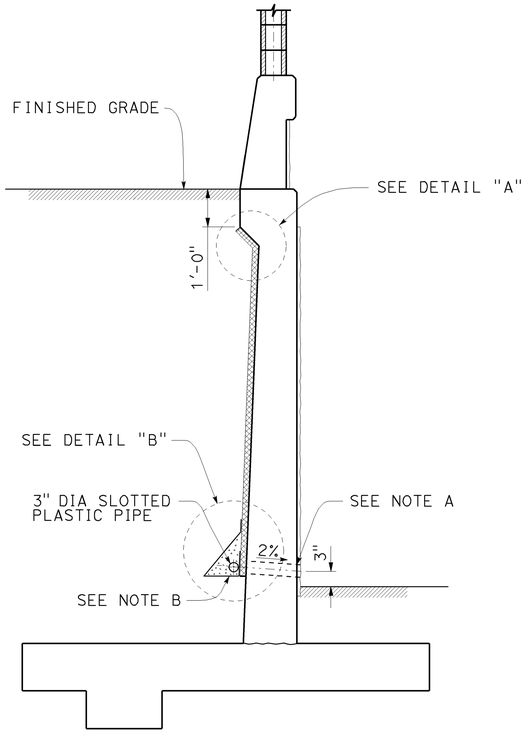

CANTILEVER RETAINING WALL WEEP HOLE AND GEOCOMPOSITE DRAIN

NO SCALE

ALTERNATIVE TO BRIDGE DETAIL BO-3

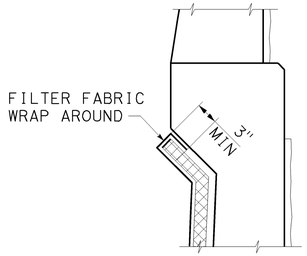

DETAIL "A"

NO SCALE

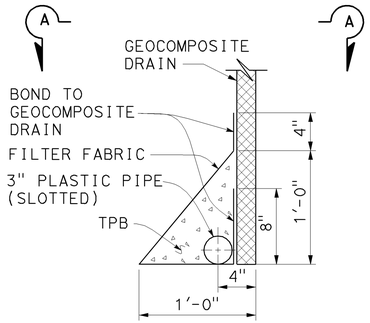

DETAIL "B"

NO SCALE

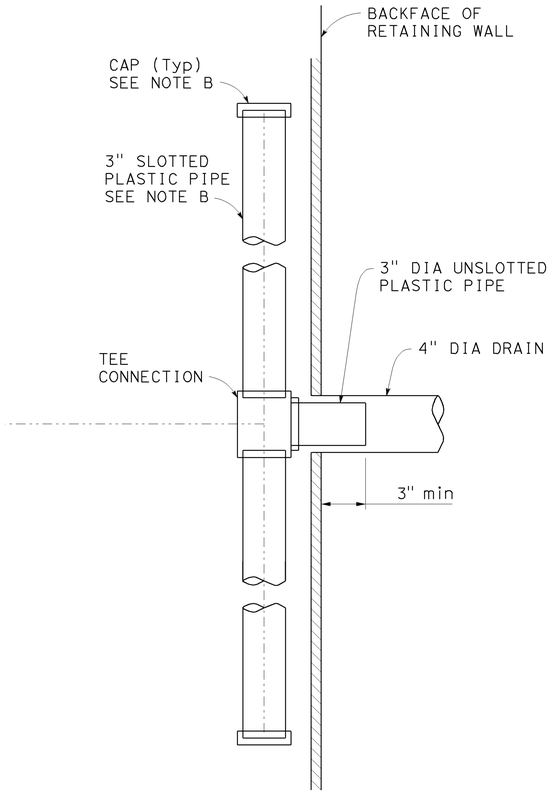

SECTION A-A

NO SCALE

NOTES

A. 4" DIA DRAINS AT INTERMEDIATE SAG POINTS AND AT 25' MAX. CENTER TO CENTER (9' C-C FOR TYPE 3 AND 9'-3" C-C FOR TYPE 4 RETAINING WALLS). FOR WALL ADJACENT TO SIDEWALKS OR CURBS, PROVIDE 4' CAST IRON OR ASBESTOS CEMENT PIPE UNDER THE SIDEWALK TO DISCHARGE THROUGH CURB FACE. EXPOSED WALL DRAINS SHALL BE LOCATED 3"± ABOVE FINISHED GRADE.

B. GEOCOMPOSITE DRAIN, TREATED PERMEABLE BASE, AND 3" DIA SLOTTED PLASTIC PIPE CONTINUOUS BEHIND RETAINING WALL OR ABUTMENT. CAP ENDS OF PIPE. PROVIDE 'TEE' CONNECTION AT EACH 4" DIA DRAIN.

C. CONNECT THE LOW END OF PLASTIC PIPE TO THE MAIN OUTLET PIPE AS APPLICABLE.

THIS PLAN ACCURATE FOR RETAINING WALL WORK ONLY.

RETAINING WALL DETAILS MISCELLANEOUS DETAILS No. 3

NO SCALE **R-14**

LAST REVISION | DATE PLOTTED => 16-DEC-2009 | 08-01-08 | TIME PLOTTED => 14:30

STATE OF CALIFORNIA - DEPARTMENT OF TRANSPORTATION | Caltrans

CONSULTANT FUNCTIONAL SUPERVISOR: PAUL YOUNG

CALCULATED-DESIGNED BY: KELLY GILLIS

CHECKED BY: CHAD HARDEN

DATE REVISED	REVISED BY
2009-07-15	FINAL SUBMITTAL

H:\pdata\10105878\Admin\submittals\2009-07-15 FINAL Electronic-Only Submittal\DGN\rangguye LOT Files 2009-2009 5:14:30 PM

BORDER LAST REVISED 4/11/2008

RELATIVE BORDER SCALE IS IN INCHES 0 1 2 3

USERNAME => trmnguye
DGN FILE => c0F031qe005.dgn

CU 12220

EA 0F0311

Dist	COUNTY	ROUTE	POST MILES TOTAL PROJECT	SHEET No.	TOTAL SHEETS
12	Ora	57	16.2/18.6	427	960

REGISTERED CIVIL ENGINEER 7/15/09 DATE

12-14-09
PLANS APPROVAL DATE

REGISTERED PROFESSIONAL ENGINEER CHAD W. HARDEN No. 67648 Exp. 6-30-11 CIVIL STATE OF CALIFORNIA

THE STATE OF CALIFORNIA OR ITS OFFICERS OR AGENTS SHALL NOT BE RESPONSIBLE FOR THE ACCURACY OR COMPLETENESS OF SCANNED COPIES OF THIS PLAN SHEET.

RBF CONSULTING
14275 ALTON PKWY
IRVINE, CA 92618

OCTA
550 S. MAIN STREET
ORANGE, CA 92863

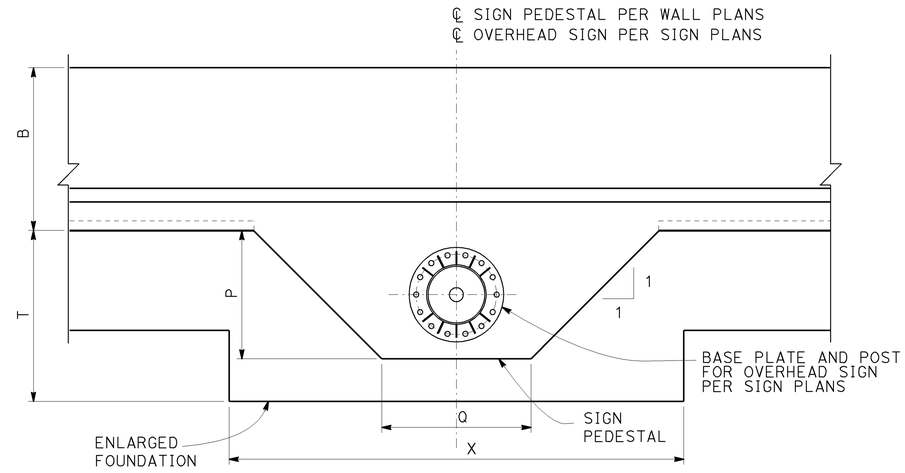

PLAN
3/8" = 1'-0"

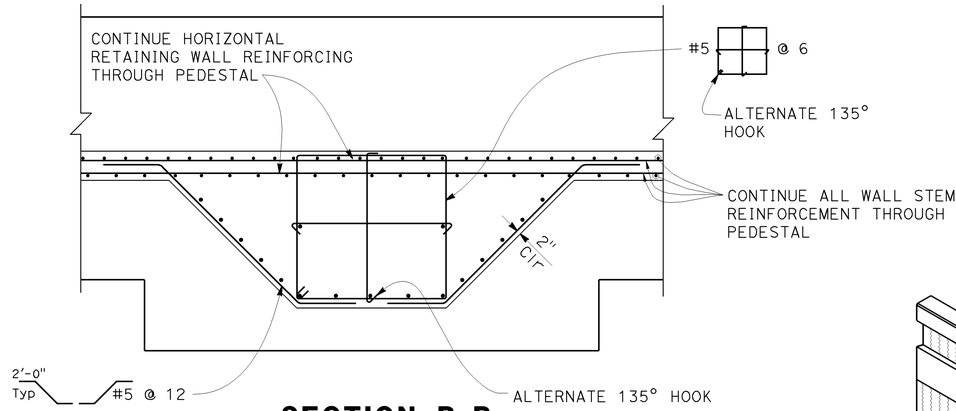

SECTION B-B
3/8" = 1'-0"

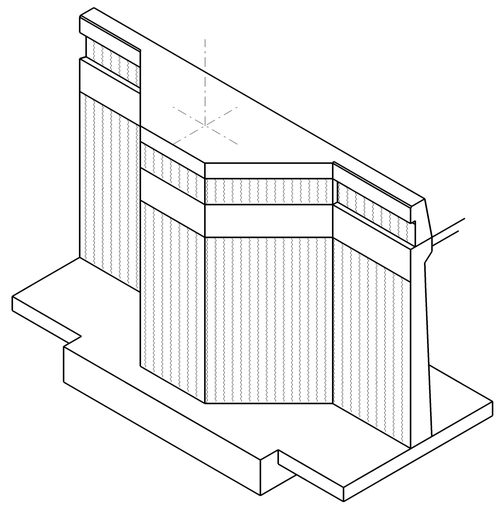

ISOMETRIC VIEW
NO SCALE

SIGN PEDESTAL SCHEDULE							
WALL No.	STATION	P	Q	T	B	W	X
522	521+20.00	4'-6"	5'-3"	5'-6"	3'-7"	9'-1"	16'-0"

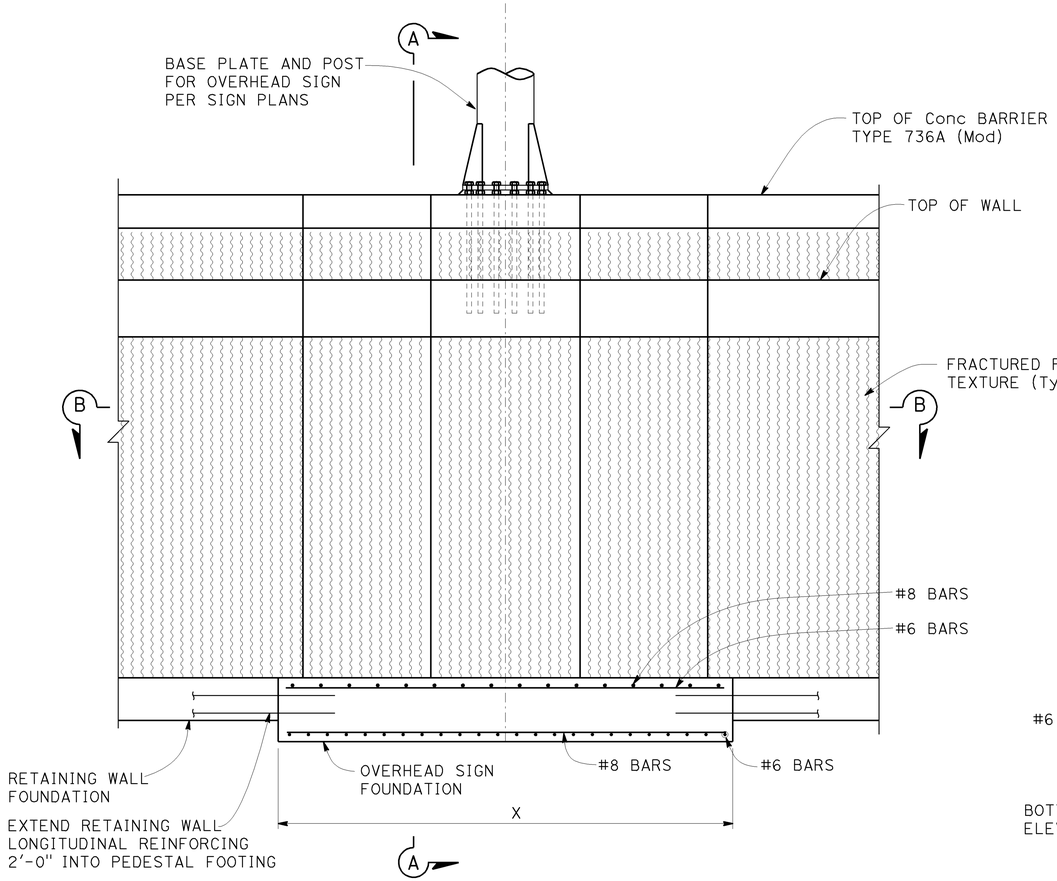

ELEVATION
3/8" = 1'-0"

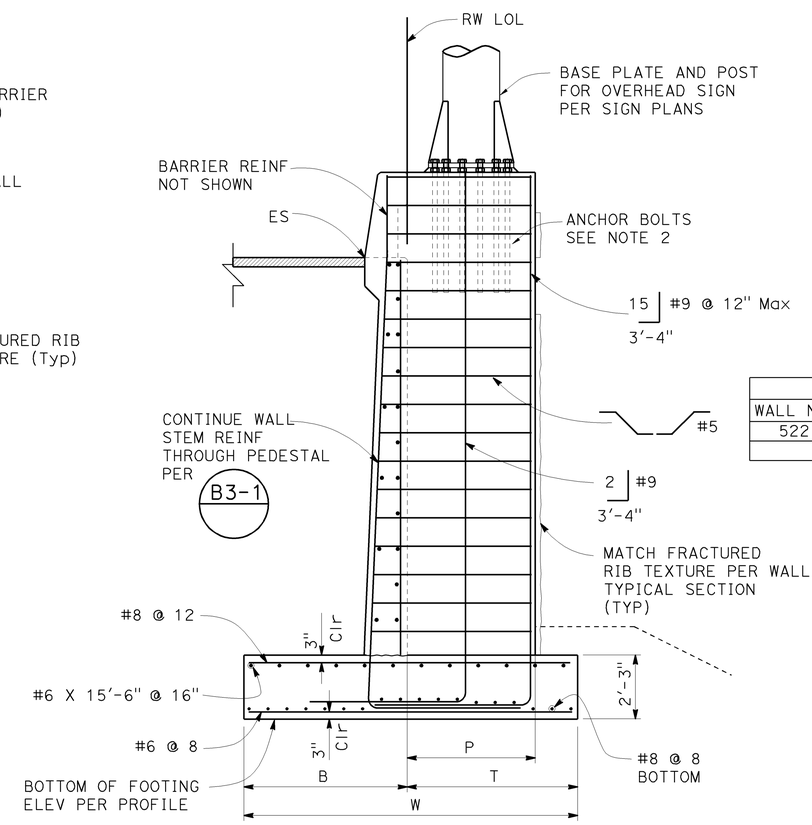

SECTION A-A
3/8" = 1'-0"

NOTES

1. REINFORCEMENT SHOWN ON ELEVATION AND SECTIONS IS IN ADDITION TO ALL OTHER REINFORCEMENT, SEE STANDARD PLAN 3-1.
2. FOR ANCHOR BOLT SIZE, BOLT CIRCLE AND BOLT EMBEDMENT, SEE SIGN PLANS.

RETAINING WALL DETAILS
OVERHEAD SIGN PEDESTAL DETAILS
R-15

THIS PLAN ACCURATE FOR RETAINING WALL WORK ONLY.

STATE OF CALIFORNIA - DEPARTMENT OF TRANSPORTATION
Caltrans
CONSULTANT FUNCTIONAL SUPERVISOR: PAUL YOUNG
CALCULATED-DESIGNED BY: KELLY GILLIS
CHECKED BY: CHAD HARDEN
REVISED BY
DATE REVISED

H:\pdata\10105878\Admin\submittals\2009-07-15 FINAL Electronic-Only Submittal\DGN\rmnguye\PLOT Files\2009-07-15 FINAL SUBMITTAL\c0F031qe006.dgn

LAST REVISION 08-01-08
DATE PLOTTED => 16-DEC-2009
TIME PLOTTED => 14:31

Dist	COUNTY	ROUTE	POST MILES TOTAL PROJECT	SHEET No.	TOTAL SHEETS
12	Ora	57	16.2/18.6	428	960

LICENSED LANDSCAPE ARCHITECT

12-14-09
PLANS APPROVAL DATE

LICENSED LANDSCAPE ARCHITECT — CATHY L. JOHNSON No. 4545 — Signature — 07-31-10 Renewal Date — 07-15-09 Date — STATE OF CALIFORNIA

THE STATE OF CALIFORNIA OR ITS OFFICERS OR AGENTS SHALL NOT BE RESPONSIBLE FOR THE ACCURACY OR COMPLETENESS OF SCANNED COPIES OF THIS PLAN SHEET.

RBF CONSULTING
14725 ALTON PKWY
IRVINE, CA 92618

ORANGE COUNTY
TRANSPORTATION AUTHORITY
550 SOUTH MAIN STREET
ORANGE, CA 92863

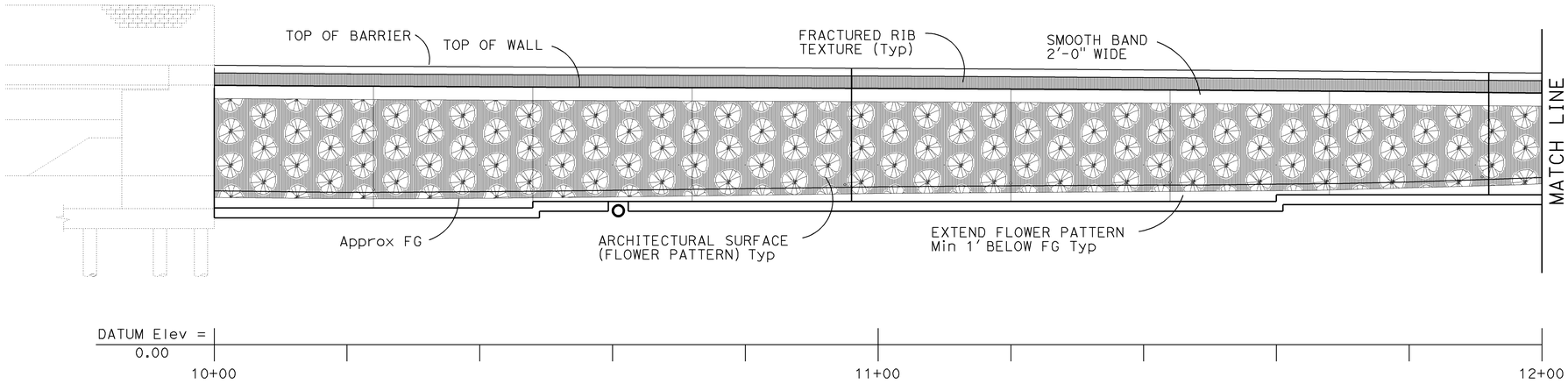

RW No. 512 DEVELOPED ELEVATION (SEGMENT 1)

SCALE: 1" = 10'

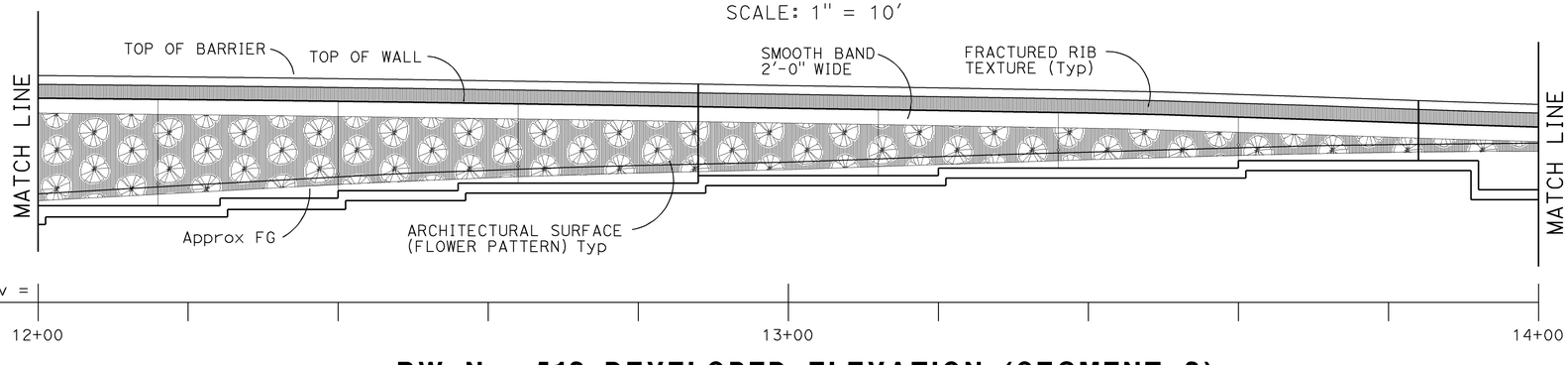

RW No. 512 DEVELOPED ELEVATION (SEGMENT 2)

SCALE: 1" = 10'

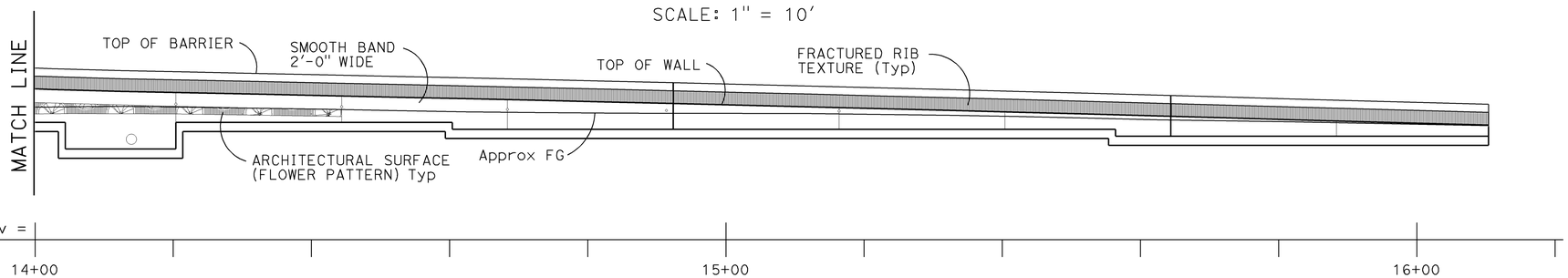

RW No. 512 DEVELOPED ELEVATION (SEGMENT 3)

SCALE: 1" = 10'

THIS PLAN ACCURATE FOR RETAINING WALL WORK ONLY.

ARCHITECTURAL TREATMENT LAYOUT
WALL No. 512

SCALE: 1" = 10'

R-16

REVISED BY	DATE REVISED
NIKI WU	06-20-2009
CATHY L. JOHNSON	07-15-2009

CALCULATED-DESIGNED BY
CHECKED BY

JOHN P. ANDREW
CONSULTANT SENIOR LANDSCAPE ARCHITECT

STATE OF CALIFORNIA - DEPARTMENT OF TRANSPORTATION
Caltrans

LAST REVISION | DATE PLOTTED => 16-DEC-2009
00-00-00 | TIME PLOTTED => 14:31

H:\pdata\10105878\Admin\submittals\2009-07-15 FINAL Electronic-Only Submittal\DGN\rangguye\FILE.DGN 07-15-2009 5:14:15PM FINAL SUBMITTAL \c0F031qe007.dgn

BORDER LAST REVISED 4/11/2008

RELATIVE BORDER SCALE IS IN INCHES 0 1 2 3

USERNAME => trmnguye
DGN FILE => c0F031qe007.dgn

CU 12220

EA 0F0311

Dist	COUNTY	ROUTE	POST MILES TOTAL PROJECT	SHEET No.	TOTAL SHEETS
12	Ora	57	16.2/28.6	429	960

LICENSED LANDSCAPE ARCHITECT

12-14-09
PLANS APPROVAL DATE

LICENSED LANDSCAPE ARCHITECT — CATHY L. JOHNSON — No. 4548 — Signature — 07-31-10 Renewal Date — 07-15-09 Date — STATE OF CALIFORNIA

THE STATE OF CALIFORNIA OR ITS OFFICERS OR AGENTS SHALL NOT BE RESPONSIBLE FOR THE ACCURACY OR COMPLETENESS OF SCANNED COPIES OF THIS PLAN SHEET.

RBF CONSULTING
14725 ALTON PKWY
IRVINE, CA 92618

ORANGE COUNTY
TRANSPORTATION AUTHORITY
550 SOUTH MAIN STREET
ORANGE, CA 92863

NOTES:

1. IDENTICAL FLOWER IMAGES, SCALE AND SPACING SHALL BE USED FOR FLOWER PATTERN.
2. WITHIN A VERTICAL COLUMN, FLOWER IMAGES SHALL ALTERNATE BETWEEN FLOWERS 'A' AND 'B'. VERTICAL COLUMNS SHALL BE OFFSET 30" FROM ADJACENT COLUMNS.
3. WHERE PLACED ON WALLS BOUNDED BY CONCRETE BARRIERS, FINISHED GRADE OR TOP OF WALL, FLOWER PATTERN SHALL BE CONTINUED WITHOUT CONCERN FOR PARTIAL FLOWER IMAGES, EXCEPT AS NOTED.
4. REFER TO STRUCTURAL DETAILS FOR WIDTH OF SMOOTH BAND TO BE APPLIED AT EDGES OF STRUCTURES.
5. WHERE THE FLOWER PATTERN WILL BE USED ADJACENT TO A HORIZONTAL LIMIT SUCH AS A BRIDGE ABUTMENT, ADJOINING MSE WALL OR OVERHEAD SIGN STRUCTURE SUPPORT, FLOWER PATTERN SHALL BE DISCONTINUED FROM A SECTION NOT LESS THAN 30" AND NOT GREATER THAN 60" FROM THE HORIZONTAL LIMIT TO AVOID TRUNCATION OF FLOWER IMAGES.
   FRACTURED RIB TEXTURE SHALL BE INSERTED IN THE RESULTING GAP TO CREATE A CONTINUOUS BUFFER BETWEEN PATTERN AREAS.
6. THE NEAREST COLUMN OF FLOWER IMAGES (FLOWER PATTERN) SHALL BE OFFSET VERTICALLY 30" FROM THE HORIZONTAL LIMIT.
7. EXTEND FLOWER PATTERN OR FRACTURED RIB TEXTURE MIN 1'-0" BELOW FG, OR CONCRETE BARRIER.

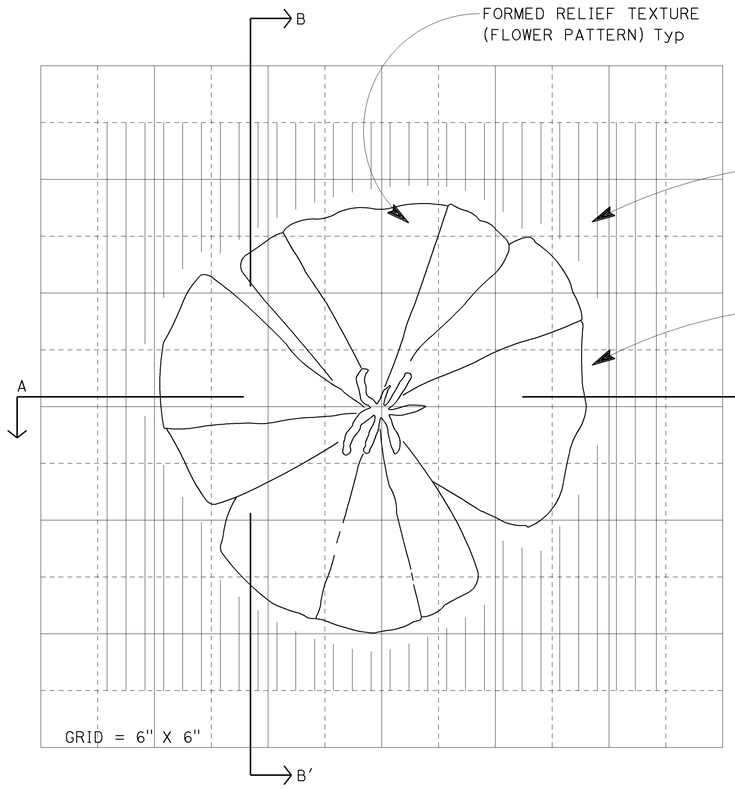

ARCHITECTURAL SURFACE (TEXTURED CONCRETE)

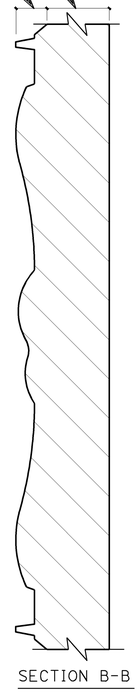

SECTION B-B

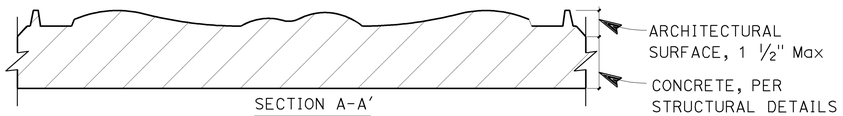

SECTION A-A'

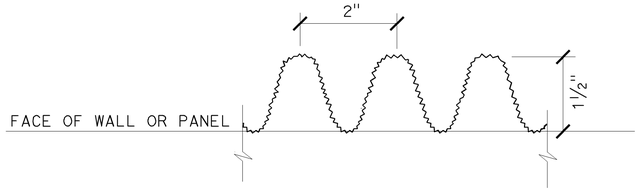

FRACTURED RIB TEXTURE (PROJECTING)

ARCHITECTURAL SURFACE (TEXTURED CONCRETE) ELEVATION

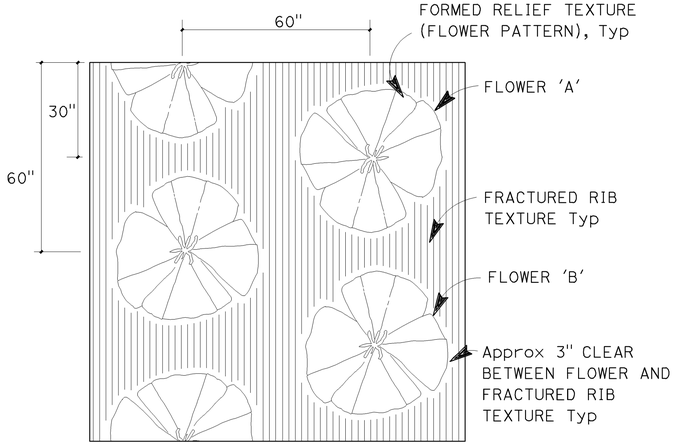

ARCHITECTURAL SURFACE (TEXTURED CONCRETE) PATTERN

ARCHITECTURAL DETAILS WALL No. 512

NO SCALE **R-17**

THIS PLAN ACCURATE FOR RETAINING WALL WORK ONLY.

H:\pdata\10105878\Admin\submittals\2009-07-15 FINAL Electronic-Only Submittal\DGN\rich\PLOT Files 16-DEC-2009 15:08

STATE OF CALIFORNIA - DEPARTMENT OF TRANSPORTATION | CONSULTANT SENIOR LANDSCAPE ARCHITECT | CALCULATED-DESIGNED BY | CHECKED BY | REVISED BY | DATE REVISED

JOHN P. ANDREW | CATHY L. JOHNSON | NIKI WU

Caltrans

LAST REVISION DATE PLOTTED => 16-DEC-2009
TIME PLOTTED => 15:08
00-00-00

BORDER LAST REVISED 4/11/2008 | RELATIVE BORDER SCALE IS IN INCHES 0 1 2 3 | USERNAME => trrichf | DGN FILE => c0F031qe008.dgn | CU 12220 | EA 0F0311

Dist	COUNTY	ROUTE	POST MILES TOTAL PROJECT	SHEET No.	TOTAL SHEETS
12	Ora	57	16.2/28.6	430	960

REGISTERED CIVIL ENGINEER 7/15/09 DATE

12-14-09
PLANS APPROVAL DATE

REGISTERED PROFESSIONAL ENGINEER CHAD W. HARDEN No. 67648 Exp. 6-30-11 CIVIL STATE OF CALIFORNIA

THE STATE OF CALIFORNIA OR ITS OFFICERS OR AGENTS SHALL NOT BE RESPONSIBLE FOR THE ACCURACY OR COMPLETENESS OF SCANNED COPIES OF THIS PLAN SHEET.

RBF CONSULTING
14275 ALTON PKWY
IRVINE, CA 92618

OCTA
550 S. MAIN STREET
ORANGE, CA 92863

RETAINING WALL QUANTITIES

RETAINING WALL NUMBER	RETAINING WALL STATION	STRUCTURAL CONCRETE (RETAINING WALL)*	FRACTURED RIB TEXTURE*	ARCHITECTURAL TREATMENT*	BAR REINFORCING STEEL (RETAINING WALL)*	STRUCTURAL EXCAVATION (RETAINING WALL)*	STRUCTURE EXCAVATION (TYPE Y-1) (AERIALLY DEPOSITED LEAD)*	STRUCTURAL BACKFILL (RETAINING WALL)*	CONCRETE BARRIER TYPE 736A (Mod)*
		CY	SQFT	SQFT	LBS	CY	CY	CY	LF
486	10+00.25 TO 14+80.21	527	4,921	0	46,764	1,671	0	1,576	480
512	10+00.00 TO 15+97.99	526	0	5,055	51,412	1,260	89	1,452	598
514	12+18.93 TO 16+24.80	290	2,658	0	18,521	847	67	752	625
522	10+00.00 TO 17+85.96	734	6,656	0	51,043	1,755	1,295	2,598	786
576	10+00.00 TO 16+56.37	427	3,867	0	31,988	1,018	93	859	656
TOTAL		2,504	18,102	5,055	199,728	6,551	1,544	7,237	3,146

* SEE STRUCTURES PLANS FOR ADDITIONAL QUANTITIES

THIS PLAN ACCURATE FOR RETAINING WALL WORK ONLY.

RETAINING WALL QUANTITIES

R-18

STATE OF CALIFORNIA - DEPARTMENT OF TRANSPORTATION
Caltrans
CONSULTANT FUNCTIONAL SUPERVISOR: PAUL YOUNG
CALCULATED-DESIGNED BY: KELLY GILLIS
CHECKED BY: CHAD HARDEN
REVISED BY
DATE REVISED

H:\pdata\10105878\Admin\submittals\2009-07-15 FINAL Electronic-Only Submittal\DGN-rich1PLOT Files 2009-07-15 FINAL SUBMITTAL\c0F031qe009.dgn

LAST REVISION 08-01-08
DATE PLOTTED => 16-DEC-2009
TIME PLOTTED => 15:09

BENCHMARKS:

Vertical Datum NAVD 88

Designation: 1L-54-82 Elev = 153.171
Described by OCS 2002 - Found 3¾" OCS Aluminum Benchmark Disk Stamped "1L-54-82", set in the Top of a 6 in. by 6 in. Concrete Post. Monument is located along the Westerly Levee of the Santa Ana River, 0.25 Miles Northerly along Levee from the Centerline of Orangewood Avenue, 200 ft. Northeasterly of the Easterly Leg of the Anaheim Angels 200 ft. tall sign, 69 ft. Westerly of the Centerline of the Bike Trail and 1.5 ft. Westerly of a Steel OCS Witness Post. Monument is set 0.3 below the Ground.

Designation: 2G-25-70 Elev = 275.872
Described by OCS 2003 - Found 3¾" OCS Aluminum Benchmark Disk Stamped "2G-25-70", set in the Southeasterly Corner of a 4 ft by 6 ft Concrete Catch Basin. Monument is Located in the Northwesterly Corner of the Intersection of Yorba Linda Boulevard and Deerpark Drive, 75 ft Westerly of the Centerline of Deerpark and 46 ft Northerly of the Centerline of Yorba Linda. Monument is set Level with the Sidewalk.

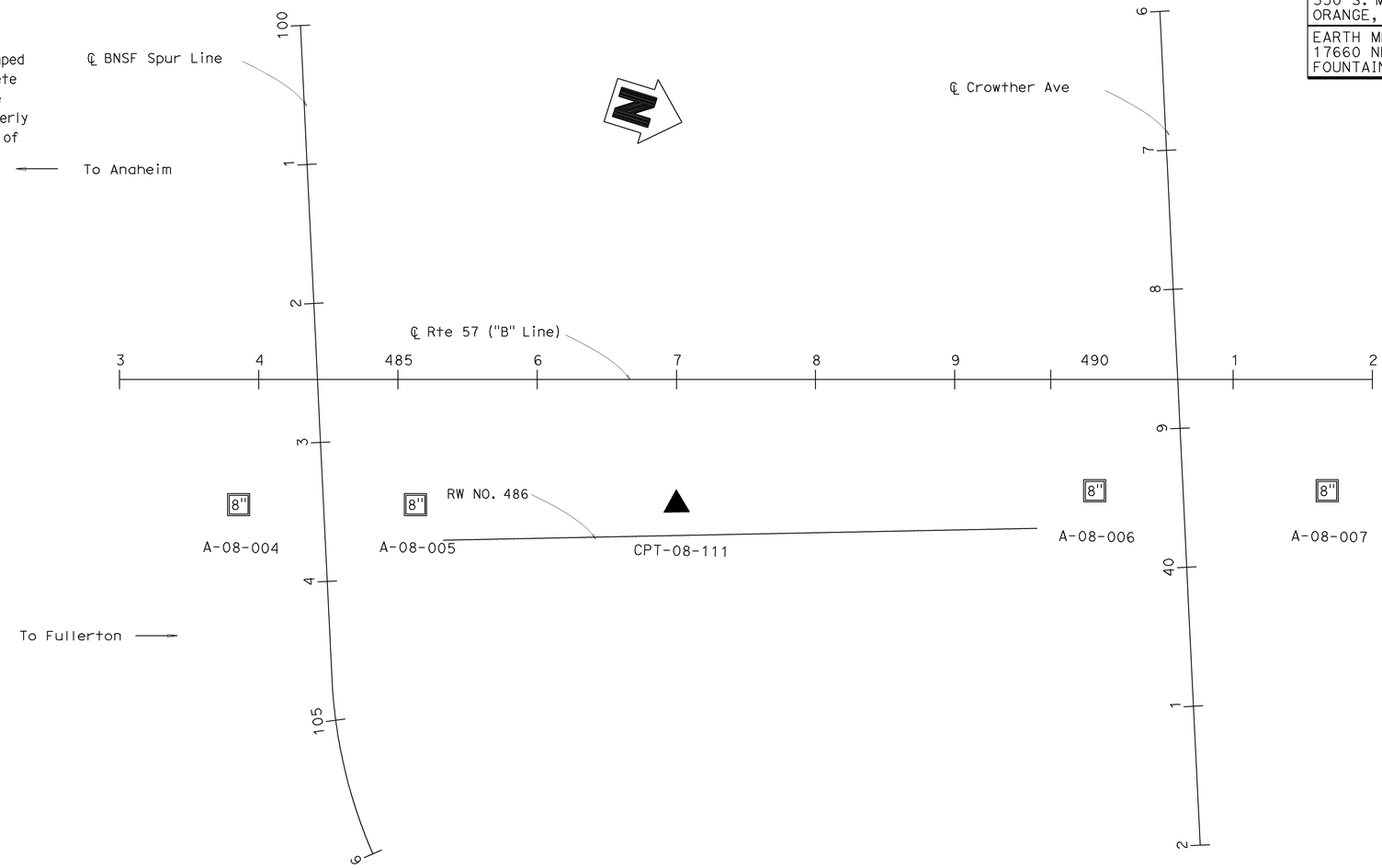

PLAN
1" = 50'

Dist	COUNTY	ROUTE	POST MILES TOTAL PROJECT	SHEET No.	TOTAL SHEETS
12	Ora	57	16.2/18.6	431	960

REGISTERED CIVIL ENGINEER — DATE 7/15/09

12-14-09
PLANS APPROVAL DATE

REGISTERED PROFESSIONAL ENGINEER — Chien-Tai Yang — No. C 66394 — Exp. 6-30-10 — CIVIL — STATE OF CALIFORNIA

THE STATE OF CALIFORNIA OR ITS OFFICERS OR AGENTS SHALL NOT BE RESPONSIBLE FOR THE ACCURACY OR COMPLETENESS OF SCANNED COPIES OF THIS PLAN SHEET.

ORANGE COUNTY TRANSPORTATION AUTHORITY
550 S. MAIN STREET
ORANGE, CA 92863-1584

EARTH MECHANICS, INC.
17660 NEWHOPE STREET, SUITE E
FOUNTAIN VALLEY, CA 92708

DESIGN OVERSIGHT
SIGN OFF DATE

DRAWN BY: J.Fang
CHECKED BY: L.Cheang

FIELD INVESTIGATION BY:
R.Jie

PREPARED FOR THE STATE OF CALIFORNIA DEPARTMENT OF TRANSPORTATION

C. Yang
PROJECT ENGINEER

BRIDGE NO.
POST MILES 16.2/18.6

RETAINING WALL NO. 486
LOG OF TEST BORINGS NO. 1 — R-19

DESIGN GENERAL PLAN SHEET (ENGLISH) (REV. 2/25/05)

ORIGINAL SCALE IN INCHES FOR REDUCED PLANS 0 1 2 3

CU 12
EA 0F0311

DISREGARD PRINTS BEARING EARLIER REVISION DATES →

REVISION DATES (PRELIMINARY STAGE ONLY): 4/30/09

SHEET OF

FILE => c0F031qe010.dgn

USERNAME => rmikesl DATE PLOTTED => 21-DEC-2009 TIME PLOTTED => 09:53

Dist	COUNTY	ROUTE	POST MILES TOTAL PROJECT	SHEET No.	TOTAL SHEETS
12	Ora	57	16.2/18.6	432	960

REGISTERED CIVIL ENGINEER — DATE 7/15/09

12-14-09
PLANS APPROVAL DATE

REGISTERED PROFESSIONAL ENGINEER — Chien-Tai Yang — No. C 66394 — Exp. 6-30-10 — CIVIL — STATE OF CALIFORNIA

THE STATE OF CALIFORNIA OR ITS OFFICERS OR AGENTS SHALL NOT BE RESPONSIBLE FOR THE ACCURACY OR COMPLETENESS OF SCANNED COPIES OF THIS PLAN SHEET.

ORANGE COUNTY TRANSPORTATION AUTHORITY
550 S. MAIN STREET
ORANGE, CA 92863-1584

EARTH MECHANICS, INC.
17660 NEWHOPE STREET, SUITE E
FOUNTAIN VALLEY, CA 92708

FOR PLAN VIEW SEE "RETAINING WALL NO. 486, LOG OF TEST BORINGS NO. 1"

NOTES:

(1) This LOTB sheet was prepared in accordance with the Caltrans Soil and Rock Logging, Classification and Presentation Manual (June 2007)

(2) 2.4" samples were taken using a California Modified Sampler.

(3) An automatic trip hammer system consisting of a hammer weight of 140 lbs falling a distance of 30" was used to advance the drive sampler.

(4) Conversion factor from 2.4" Modified California Ring Sampler blowcounts to Standard Penetration Test (SPT) blowcounts is 0.5.

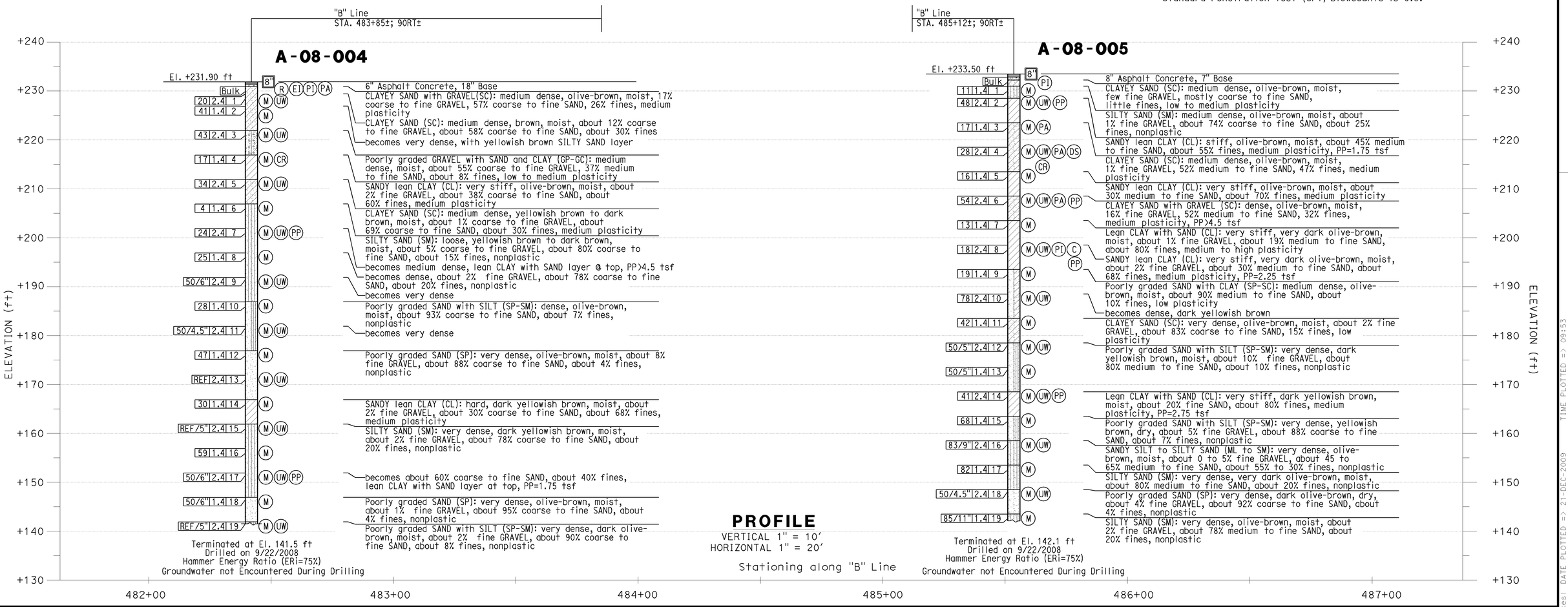

PROFILE
VERTICAL 1" = 10'
HORIZONTAL 1" = 20'

DESIGN OVERSIGHT	DRAWN BY: J.Fang	FIELD INVESTIGATION BY:	PREPARED FOR THE STATE OF CALIFORNIA DEPARTMENT OF TRANSPORTATION	C. Yang PROJECT ENGINEER	BRIDGE NO.
SIGN OFF DATE	CHECKED BY: L.Cheang	R.Jie			POST MILES 16.2/18.6

RETAINING WALL NO. 486
LOG OF TEST BORINGS NO. 2
R-20

DESIGN GENERAL PLAN SHEET (ENGLISH) (REV. 2/25/05)

ORIGINAL SCALE IN INCHES FOR REDUCED PLANS 0 1 2 3

CU 12
EA 0F0311

DISREGARD PRINTS BEARING EARLIER REVISION DATES →

REVISION DATES (PRELIMINARY STAGE ONLY) 4/30/09

SHEET OF

FILE => c0F031qe011.dgn

USERNAME => ttrimkesl DATE PLOTTED => 21-DEC-2009 TIME PLOTTED => 09:53

Dist	COUNTY	ROUTE	POST MILES TOTAL PROJECT	SHEET No.	TOTAL SHEETS
12	Ora	57	16.2/18.6	433	960

REGISTERED CIVIL ENGINEER — DATE 7/15/09

12-14-09
PLANS APPROVAL DATE

REGISTERED PROFESSIONAL ENGINEER — Chien-Tai Yang — No. C 66394 — Exp. 6-30-10 — CIVIL — STATE OF CALIFORNIA

THE STATE OF CALIFORNIA OR ITS OFFICERS OR AGENTS SHALL NOT BE RESPONSIBLE FOR THE ACCURACY OR COMPLETENESS OF SCANNED COPIES OF THIS PLAN SHEET.

ORANGE COUNTY TRANSPORTATION AUTHORITY
550 S. MAIN STREET
ORANGE, CA 92863-1584

EARTH MECHANICS, INC.
17660 NEWHOPE STREET, SUITE E
FOUNTAIN VALLEY, CA 92708

FOR PLAN VIEW SEE "RETAINING WALL NO. 486, LOG OF TEST BORINGS NO. 1"

NOTES:

(1) This LOTB sheet was prepared in accordance with the Caltrans Soil and Rock Logging, Classification and Presentation Manual (June 2007)

(2) 2.4" samples were taken using a California Modified Sampler.

(3) An automatic trip hammer system consisting of a hammer weight of 140 lbs falling a distance of 30" was used to advance the drive sampler.

(4) Conversion factor from 2.4" Modified California Ring Sampler blowcounts to Standard Penetration Test (SPT) blowcounts is 0.5.

Standard Penetration Test (SPT) blowcounts is 0.5.

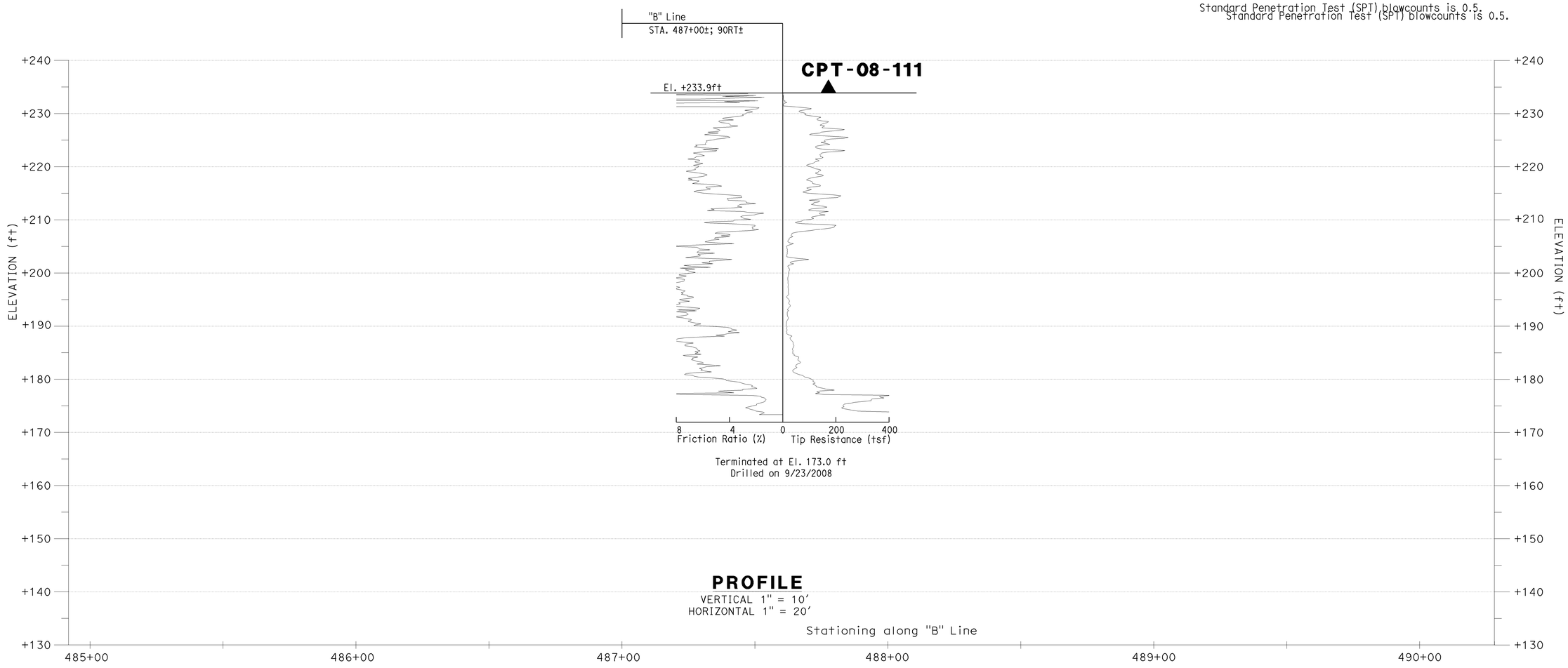

PROFILE

VERTICAL 1" = 10'
HORIZONTAL 1" = 20'

DESIGN OVERSIGHT	DRAWN BY: J.Fang	FIELD INVESTIGATION BY:	PREPARED FOR THE STATE OF CALIFORNIA DEPARTMENT OF TRANSPORTATION	C.Yang PROJECT ENGINEER	BRIDGE NO.	RETAINING WALL NO. 486
SIGN OFF DATE	CHECKED BY: L.Cheang	R.Jie			POST MILES 16.2/18.6	LOG OF TEST BORINGS NO. 3 — R-21
DESIGN GENERAL PLAN SHEET (ENGLISH) (REV. 2/25/05)	ORIGINAL SCALE IN INCHES FOR REDUCED PLANS 0 1 2 3			CU 12 EA 0F0311	DISREGARD PRINTS BEARING EARLIER REVISION DATES →	REVISION DATES (PRELIMINARY STAGE ONLY) 4/30/09 — SHEET — OF

FILE => c0F031qe012.dgn

USERNAME => tmikesl DATE PLOTTED => 21-DEC-2009 TIME PLOTTED => 09:53

Dist	COUNTY	ROUTE	POST MILES TOTAL PROJECT	SHEET No.	TOTAL SHEETS
12	Ora	57	16.2/18.6	434	960

REGISTERED CIVIL ENGINEER — DATE 7/15/09

12-14-09
PLANS APPROVAL DATE

REGISTERED PROFESSIONAL ENGINEER — Chien-Tai Yang — No. C 66394 — Exp. 6-30-10 — CIVIL — STATE OF CALIFORNIA

THE STATE OF CALIFORNIA OR ITS OFFICERS OR AGENTS SHALL NOT BE RESPONSIBLE FOR THE ACCURACY OR COMPLETENESS OF SCANNED COPIES OF THIS PLAN SHEET.

ORANGE COUNTY TRANSPORTATION AUTHORITY
550 S. MAIN STREET
ORANGE, CA 92863-1584

EARTH MECHANICS, INC.
17660 NEWHOPE STREET, SUITE E
FOUNTAIN VALLEY, CA 92708

FOR PLAN VIEW SEE "RETAINING WALL NO. 486, LOG OF TEST BORINGS NO. 1"

NOTES:

(1) This LOTB sheet was prepared in accordance with the Caltrans Soil and Rock Logging, Classification and Presentation Manual (June 2007)

(2) 2.4" samples were taken using a California Modified Sampler.

(3) An automatic trip hammer system consisting of a hammer weight of 140 lbs falling a distance of 30" was used to advance the drive sampler.

(4) Conversion factor from 2.4" Modified California Ring Sampler blowcounts to Standard Penetration Test (SPT) blowcounts is 0.5.

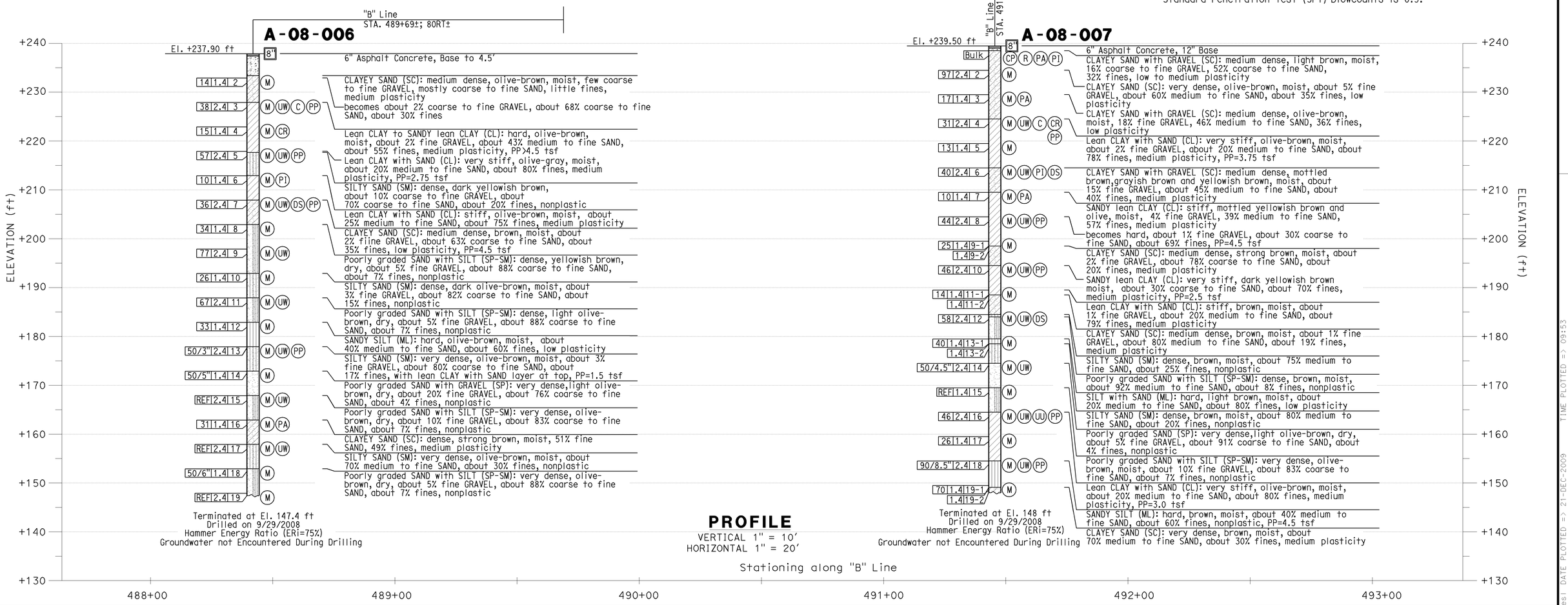

PROFILE
VERTICAL 1" = 10'
HORIZONTAL 1" = 20'

DESIGN OVERSIGHT	DRAWN BY: J.Fang	FIELD INVESTIGATION BY:	PREPARED FOR THE STATE OF CALIFORNIA DEPARTMENT OF TRANSPORTATION	C. Yang	BRIDGE NO.	RETAINING WALL NO. 486
SIGN OFF DATE	CHECKED BY: L.Cheang	R.Jie		PROJECT ENGINEER	POST MILES 16.2/18.6	LOG OF TEST BORINGS NO. 4 — R-22

DESIGN GENERAL PLAN SHEET (ENGLISH) (REV. 2/25/05)

ORIGINAL SCALE IN INCHES FOR REDUCED PLANS 0 1 2 3

CU 12
EA 0F0311

DISREGARD PRINTS BEARING EARLIER REVISION DATES →

REVISION DATES (PRELIMINARY STAGE ONLY) 4/30/09

SHEET OF

FILE => c0F031qe013.dgn

USERNAME => ttmirkes| DATE PLOTTED => 21-DEC-2009 TIME PLOTTED => 09:53

REFERENCE: CALTRANS SOIL & ROCK LOGGING, CLASSIFICATION, AND PRESENTATION MANUAL (JUNE 2007)

Dist	COUNTY	ROUTE	POST MILES TOTAL PROJECT	SHEET No.	TOTAL SHEETS
12	Ora	57	16.2/18.6	435	960

REGISTERED CIVIL ENGINEER — 7/15/09 DATE

Chien-Tai Yang, No. C 66394, Exp. 6-30-10, CIVIL, REGISTERED PROFESSIONAL ENGINEER, STATE OF CALIFORNIA

12-14-09
PLANS APPROVAL DATE

THE STATE OF CALIFORNIA OR ITS OFFICERS OR AGENTS SHALL NOT BE RESPONSIBLE FOR THE ACCURACY OR COMPLETENESS OF SCANNED COPIES OF THIS PLAN SHEET.

ORANGE COUNTY TRANSPORTATION AUTHORITY
550 S. MAIN STREET
ORANGE, CA 92863-1584

EARTH MECHANICS, INC.
17660 NEWHOPE STREET, SUITE E
FOUNTAIN VALLEY, CA 92708

CEMENTATION

Description	Criteria
Weak	Crumbles or breaks with handling or little finger pressure.
Moderate	Crumbles or breaks with considerable finger pressure.
Strong	Will not crumble or break with finger pressure.

BOREHOLE IDENTIFICATION

Symbol	Hole Type	Description
Size	A	Auger Boring
Size	R P	Rotary drilled boring Rotary percussion boring (air)
Size	R	Rotary drilled diamond core
Size	HD HA	Hand driven (1-inch soil tube) Hand Auger
●	D	Dynamic Cone Penetration Boring
▲	CPT	Cone Penetration Test (ASTM D 5778-95)
⬚	O	Other

Note: Size in inches.

CONSISTENCY OF COHESIVE SOILS

Description	Unconfined Compressive Strength (tsf)	Pocket Penetrometer Measurement (tsf)	Torvane Measurement (tsf)	Field Approximation
Very Soft	< 0.25	< 0.25	< 0.12	Easily penetrated several inches by fist
Soft	0.25 to 0.50	0.25 to 0.50	0.12 to 0.25	Easily penetrated several inches by thumb
Medium Stiff	0.50 to 1.0	0.50 to 1.0	0.25 to 0.50	Penetrated several inches by thumb with moderate effort
Stiff	1 to 2	1 to 2	0.50 to 1.0	Readily indented by thumb but penetrated only with great effort
Very Stiff	2 to 4	2 to 4	1.0 to 2.0	Readily indented by thumbnail
Hard	> 4.0	> 4.0	> 2.0	Indented by thumbnail with difficulty

PLASTICITY OF FINE-GRAINED SOILS

Description	Criteria
Nonplastic	A 1/8-inch thread cannot be rolled at any water content.
Low	The thread can barely be rolled and the lump cannot be formed when drier than the plastic limit.
Medium	The thread is easy to roll and not much time is required to reach the plastic limit. The thread cannot be rerolled after reaching the plastic limit. The lump crumbles when drier than the plastic limit.
High	It takes considerable time rolling and kneading to reach the plastic limit. The thread can be rerolled several times after reaching the plastic limit. The lump can be formed without crumbling when drier than the plastic limit.

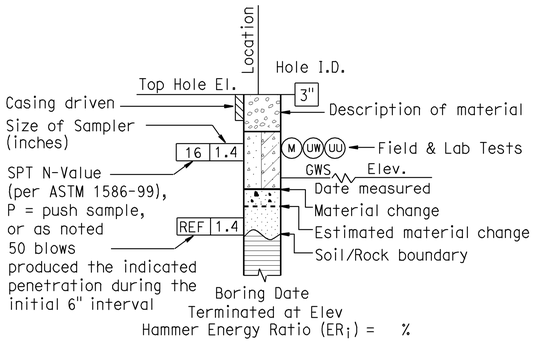

ROTARY BORING

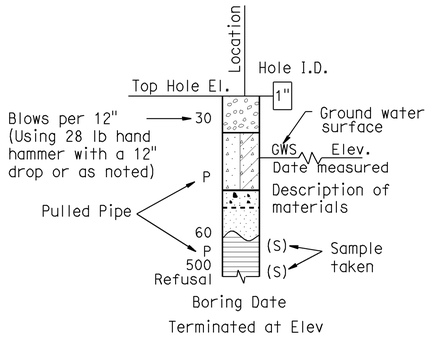

HAND BORING

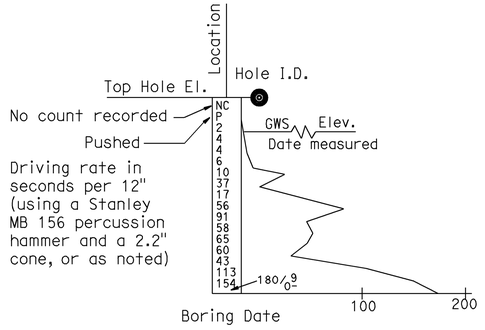

DYNAMIC CONE PENETRATION BORING

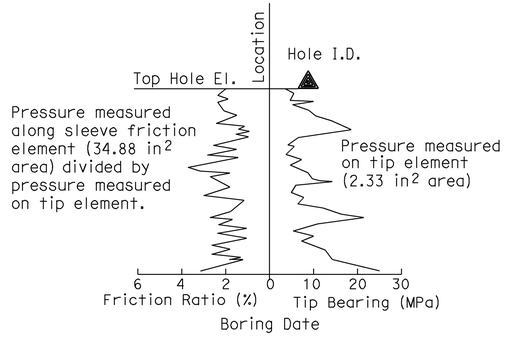

CONE PENETRATION TEST (CPT) SOUNDING

DESIGN OVERSIGHT SIGN OFF DATE	DRAWN BY: J.Fang CHECKED BY: L.Cheang	FIELD INVESTIGATION BY: R.Jie	PREPARED FOR THE STATE OF CALIFORNIA DEPARTMENT OF TRANSPORTATION	C. Yang PROJECT ENGINEER	BRIDGE NO. POST MILES 16.2/18.6	RETAINING WALL NO. 486 LOG OF TEST BORINGS NO. 5 R-23
DESIGN GENERAL PLAN SHEET (ENGLISH) (REV. 2/25/05)	ORIGINAL SCALE IN INCHES FOR REDUCED PLANS 0 1 2 3			CU 12 EA 0F0311	DISREGARD PRINTS BEARING EARLIER REVISION DATES →	REVISION DATES (PRELIMINARY STAGE ONLY) SHEET OF

FILE => c0F031qe014.dgn

USERNAME => ttrrene DATE PLOTTED => 17-DEC-2009 TIME PLOTTED => 07:01

REFERENCE: CALTRANS SOIL & ROCK LOGGING, CLASSIFICATION, AND PRESENTATION MANUAL (JUNE 2007)

GROUP SYMBOLS AND NAMES

Graphic/Symbol	Group Names	Graphic/Symbol	Group Names
GW	Well-graded GRAVEL Well-graded GRAVEL with SAND	CL	Lean CLAY Lean CLAY with SAND Lean CLAY with GRAVEL SANDY lean CLAY SANDY lean CLAY with GRAVEL GRAVELLY lean CLAY GRAVELLY lean CLAY with SAND
GP	Poorly graded GRAVEL Poorly graded GRAVEL with SAND		
GW-GM	Well-graded GRAVEL with SILT Well-graded GRAVEL with SILT and SAND	CL-ML	SILTY CLAY SILTY CLAY with SAND SILTY CLAY with GRAVEL SANDY SILTY CLAY SANDY SILTY CLAY with GRAVEL GRAVELLY SILTY CLAY GRAVELLY SILTY CLAY with SAND
GW-GC	Well-graded GRAVEL with CLAY (or SILTY CLAY) Well-graded GRAVEL with CLAY and SAND (or SILTY CLAY and SAND)		
GP-GM	Poorly graded GRAVEL with SILT Poorly graded GRAVEL with SILT and SAND	ML	SILT SILT with SAND SILT with GRAVEL SANDY SILT SANDY SILT with GRAVEL GRAVELLY SILT GRAVELLY SILT with SAND
GP-GC	Poorly graded GRAVEL with CLAY (or SILTY CLAY) Poorly graded GRAVEL with CLAY and SAND (or SILTY CLAY and SAND)		
GM	SILTY GRAVEL SILTY GRAVEL with SAND	OL	ORGANIC lean CLAY ORGANIC lean CLAY with SAND ORGANIC lean CLAY with GRAVEL SANDY ORGANIC lean CLAY SANDY ORGANIC lean CLAY with GRAVEL GRAVELLY ORGANIC lean CLAY GRAVELLY ORGANIC lean CLAY with SAND
GC	CLAYEY GRAVEL CLAYEY GRAVEL with SAND		
GC-GM	SILTY, CLAYEY GRAVEL SILTY, CLAYEY GRAVEL with SAND	OL	ORGANIC SILT ORGANIC SILT with SAND ORGANIC SILT with GRAVEL SANDY ORGANIC SILT SANDY ORGANIC SILT with GRAVEL GRAVELLY ORGANIC SILT GRAVELLY ORGANIC SILT with SAND
SW	Well-graded SAND Well-graded SAND with GRAVEL		
SP	Poorly graded SAND Poorly graded SAND with GRAVEL	CH	Fat CLAY Fat CLAY with SAND Fat CLAY with GRAVEL SANDY fat CLAY SANDY fat CLAY with GRAVEL GRAVELLY fat CLAY GRAVELLY fat CLAY with SAND
SW-SM	Well-graded SAND with SILT Well-graded SAND with SILT and GRAVEL		
SW-SC	Well-graded SAND with CLAY (or SILTY CLAY) Well-graded SAND with CLAY and GRAVEL (or SILTY CLAY and GRAVEL)	MH	Elastic SILT Elastic SILT with SAND Elastic SILT with GRAVEL SANDY elastic SILT SANDY elastic SILT with GRAVEL GRAVELLY elastic SILT GRAVELLY elastic SILT with SAND
SP-SM	Poorly graded SAND with SILT Poorly graded SAND with SILT and GRAVEL		
SP-SC	Poorly graded SAND with CLAY (or SILTY CLAY) Poorly graded SAND with CLAY and GRAVEL (or SILTY CLAY and GRAVEL)	OH	ORGANIC fat CLAY ORGANIC fat CLAY with SAND ORGANIC fat CLAY with GRAVEL SANDY ORGANIC fat CLAY SANDY ORGANIC fat CLAY with GRAVEL GRAVELLY ORGANIC fat CLAY GRAVELLY ORGANIC fat CLAY with SAND
SM	SILTY SAND SILTY SAND with GRAVEL		
SC	CLAYEY SAND CLAYEY SAND with GRAVEL	OH	ORGANIC elastic SILT ORGANIC elastic SILT with SAND ORGANIC elastic SILT with GRAVEL SANDY ORGANIC elastic SILT SANDY ORGANIC elastic SILT with GRAVEL GRAVELLY ORGANIC elastic SILT GRAVELLY ORGANIC elastic SILT with SAND
SC-SM	SILTY, CLAYEY SAND SILTY, CLAYEY SAND with GRAVEL		
PT	PEAT	OL/OH	ORGANIC SOIL ORGANIC SOIL with SAND ORGANIC SOIL with GRAVEL SANDY ORGANIC SOIL SANDY ORGANIC SOIL with GRAVEL GRAVELLY ORGANIC SOIL GRAVELLY ORGANIC SOIL with SAND
	COBBLES COBBLES and BOULDERS BOULDERS		

FIELD AND LABORATORY TESTING

- (C) Consolidation (ASTM D 2435)
- (CL) Collapse Potential (ASTM D 5333)
- (CP) Compaction Curve (CTM 216)
- (CR) Corrosivity Testing (CTM 643, CTM 422, CTM 417)
- (CU) Consolidated Undrained Triaxial (ASTM D 4767)
- (DS) Direct Shear (ASTM D 3080)
- (EI) Expansion Index (ASTM D 4829)
- (M) Moisture Content (ASTM D 2216)
- (OC) Organic Content-% (ASTM D 2974)
- (P) Permeability (CTM 220)
- (PA) Particle Size Analysis (ASTM D 422)
- (PI) Plasticity Index (AASHTO T 90) Liquid Limit (AASHTO T 89)
- (PL) Point Load Index (ASTM D 5731)
- (PM) Pressure Meter
- (PP) Pocket Penetrometer
- (R) R-Value (CTM 301)
- (SE) Sand Equivalent (CTM 217)
- (SG) Specific Gravity (AASHTO T 100)
- (SL) Shrinkage Limit (ASTM D 427)
- (SW) Swell Potential (ASTM D 4546)
- (TV) Pocket Torvane
- (UC) Unconfined Compression-Soil (ASTM D 2166); Unconfined Compression-Rock (ASTM D 2938)
- (UU) Unconsolidated Undrained Triaxial (ASTM D 2850)
- (UW) Unit Weight (ASTM D 4767)
- (VS) Vane Shear (AASHTO T 223)

Dist	COUNTY	ROUTE	POST MILES TOTAL PROJECT	SHEET No.	TOTAL SHEETS
12	Ora	57	16.2/18.6	436	960

REGISTERED CIVIL ENGINEER — 7/15/09 DATE

12-14-09
PLANS APPROVAL DATE

REGISTERED PROFESSIONAL ENGINEER — Chien-Tai Yang — No. C 66394 — Exp. 6-30-10 — CIVIL — STATE OF CALIFORNIA

THE STATE OF CALIFORNIA OR ITS OFFICERS OR AGENTS SHALL NOT BE RESPONSIBLE FOR THE ACCURACY OR COMPLETENESS OF SCANNED COPIES OF THIS PLAN SHEET.

ORANGE COUNTY TRANSPORTATION AUTHORITY
550 S. MAIN STREET
ORANGE, CA 92863-1584

EARTH MECHANICS, INC.
17660 NEWHOPE STREET, SUITE E
FOUNTAIN VALLEY, CA 92708

APPARENT DENSITY OF COHESIONLESS SOILS

Description	SPT N_{60} (Blows / 12 inches)
Very loose	0 - 4
Loose	5 - 10
Medium Dense	11 - 30
Dense	31 - 50
Very Dense	> 50

MOISTURE

Description	Criteria
Dry	Absence of moisture, dusty, dry to the touch
Moist	Damp but no visible water
Wet	Visible free water, usually soil is below water table

PERCENT OR PROPORTION OF SOILS

Description	Criteria
Trace	Particles are present but estimated to be less than 5%
Few	5 to 10%
Little	15 to 25%
Some	30 to 45%
Mostly	50 to 100%

PARTICLE SIZE

Description		Size
Boulder		> 12"
Cobble		3" to 12"
Gravel	Coarse	3/4" to 3"
	Fine	No. 4 to 3/4"
Sand	Coarse	No. 10 to No. 4
	Medium	No. 40 to No. 10
	Fine	No. 200 to No. 40

DESIGN OVERSIGHT

SIGN OFF DATE

DRAWN BY: J.Fang

CHECKED BY: L.Cheang

FIELD INVESTIGATION BY: R.Jie

PREPARED FOR THE STATE OF CALIFORNIA DEPARTMENT OF TRANSPORTATION

C. Yang
PROJECT ENGINEER

BRIDGE NO.

POST MILES 16.2/18.6

RETAINING WALL NO. 486
LOG OF TEST BORINGS NO. 6

R-24

DESIGN GENERAL PLAN SHEET (ENGLISH) (REV. 2/25/05)

ORIGINAL SCALE IN INCHES FOR REDUCED PLANS 0 1 2 3

CU 12
EA 0F0311

DISREGARD PRINTS BEARING EARLIER REVISION DATES →

REVISION DATES (PRELIMINARY STAGE ONLY)

SHEET OF

FILE => c0F031qe015.dgn

USERNAME => ttrent DATE PLOTTED => 17-DEC-2009 TIME PLOTTED => 07:01

DIST	COUNTY	ROUTE	POST MILES TOTAL PROJECT	SHEET NO.	TOTAL SHEETS
12	Ora	57	11.1/21.2	467	491

Kul Bhushan 12/20/89
GEOTECHNICAL PROFESSIONAL

10-29-90
PLANS APPROVAL DATE

REGISTERED PROFESSIONAL ENGINEER — KUL BHUSHAN — No. GE 000144 — Exp. 12/31/1989 — GEOTECHNICAL — STATE OF CALIFORNIA

GEOFON, INC.
5552 CERRITOS AVENUE, SUITE B
CYPRESS, CALIFORNIA
JOB NO.: 88-351

DIVISION OF ENGINEERING SERVICES - GEOTECHNICAL SERVICES					
As-Built Log of Test Borings sheet is considered an informational document only. As such, the State of California registration seal with signature, license number and registration certificate expiration date confirm that this is a true and accurate copy of the original document. This drawing is available and presented only for the convenience of any bidder, contractor or other interested party.					
DIST.	COUNTY	ROUTE	POST MILES -TOTAL PROJECT	Sheet No.	Total Sheets
12	Ora	57	16.2/18.6	437	960

Lino Cheang 06/29/09
REGISTERED CIVIL ENGINEER — DATE

RETAINING WALL NO. 486

LOG OF TEST BORINGS NO. 7 — R-25

NOTE: A COPY OF THIS LOG OF TEST BORINGS IS AVAILABLE AT OFFICE OF STRUCTURE MAINTENANCE AND INVESTIGATIONS, SACRAMENTO, CALIFORNIA

CU: 12
EA: 0F0311

BRIDGE No.: X

Sheet ___ of ___

To accompany plans dated 12-14-09

REGISTERED PROFESSIONAL ENGINEER — LINO C. CHEANG — NO. GE 2345 — EXP. 9/30/09 — GEOTECHNICAL — STATE OF CALIFORNIA

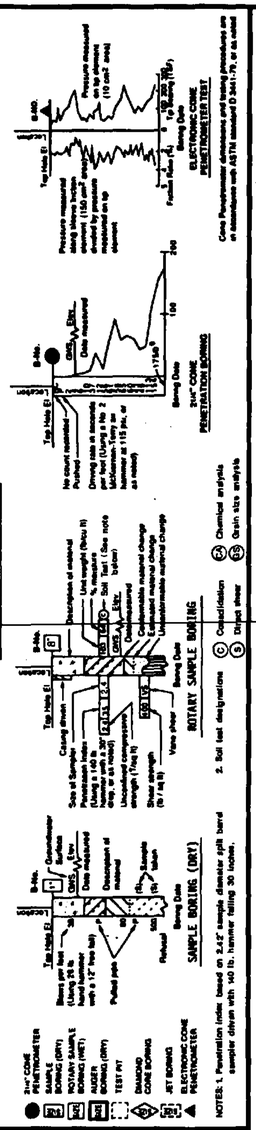

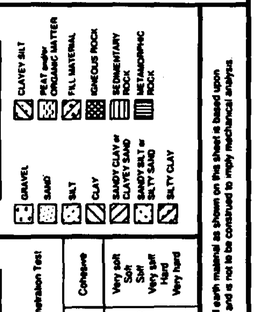

NOTE: Classification of earth material as shown on this sheet is based upon field inspection and is not to be construed to imply mechanical analysis.

PLAN

SCALE: 1"=40'

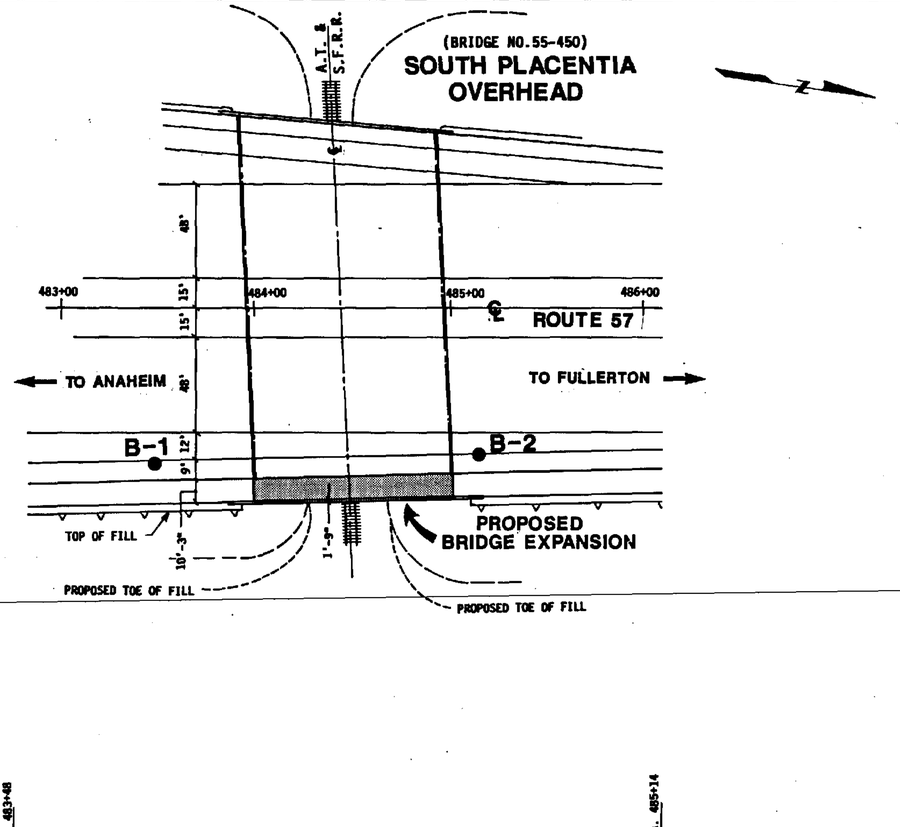

PROFILE

VERTICAL SCALE: 1"=10'
HORIZONTAL SCALE: 1"=20'

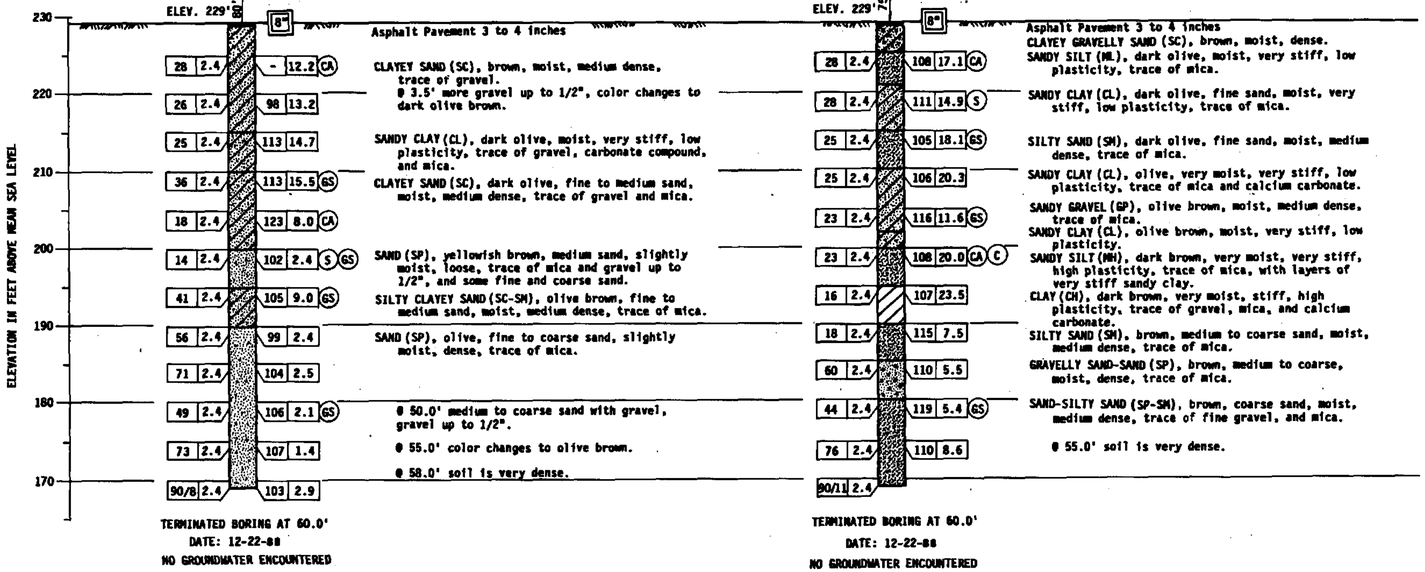

AS BUILT NO AS BUILT CHANGES J. PALMEIRO
CORRECTIONS BY I. MAHALE
CONTRACT NO. 12-020184
DATE 11-24-92

BM 535-D-70 ELEVATION 257.37

FOUND CHISELED CROSS ON TOP OF THE NW ANCHOR BOLT OF A SIGN BASE 77 FEET EASTERLY OF THE CENTERLINE OF ROUTE 57 (ORANGE FREEWAY) STATION 535+60 AND 105 FEET NORTHERLY OF THE CENTERLINE OF NUTWOOD AVE..

DESIGN OVERSIGHT 8-22-90 SIGN OFF DATE

DRAWN BY B. BASMADJIAN
CHECKED BY H. ABDALLAH

S. MOHAMAD
FIELD INVESTIGATOR
DATE 12-28-89

PREPARED FOR THE STATE OF CALIFORNIA DEPARTMENT OF TRANSPORTATION

Victor Lee
PROJECT ENGINEER

BRIDGE NO. 55-450
POST MILE 16.7

SOUTH PLACENTIA OVERHEAD (WIDEN)

LOG OF TEST BORINGS

ORIGINAL SCALE IN INCHES FOR REDUCED PLANS 0 1 2 3

CU 12208
EA 020180

DISREGARD PRINTS BEARING EARLIER REVISION DATES →

REVISION DATES (PRELIMINARY STAGE ONLY)

SHEET 9 OF 10

FILENAME => c0F031qe016.tif

FED. ROAD DIV. NO.	STATE	F. A. PROJECT NO.	SHEET NO.	TOTAL SHEETS
7	CALIF.			

DIST.	COUNTY	ROUTE	SECTION	PHASE NO.	TOTAL SHEETS
07	ORA	57	16.2/18.6	122	197

Date Approved August 28, 1967

DIVISION OF ENGINEERING SERVICES - GEOTECHNICAL SERVICES

As-Built Log of Test Borings sheet is considered an informational document only. As such, the State of California registration seal with signature, license number and registration certificate expiration date confirm that this is a true and accurate copy of the original document. This drawing is available and presented only for the convenience of any bidder, contractor or other interested party.

DIST.	COUNTY	ROUTE	POST MILES -TOTAL PROJECT	Sheet No.	Total Sheets
12	Ora	57	16.2/18.6	438	960

Lino Cheang — 06/29/09
REGISTERED CIVIL ENGINEER — DATE

RETAINING WALL NO. 486

LOG OF TEST BORINGS NO. 8 — R-26

NOTE: A COPY OF THIS LOG OF TEST BORINGS IS AVAILABLE AT OFFICE OF STRUCTURE MAINTENANCE AND INVESTIGATIONS, SACRAMENTO, CALIFORNIA

CU: 12
EA: 0F0311
BRIDGE No. X
Sheet of

To accompany plans dated 12-14-09

REGISTERED PROFESSIONAL ENGINEER
LINO C. CHEANG
NO. GE 2345
EXP. 9/30/09
GEOTECHNICAL
STATE OF CALIFORNIA

BENCH MARK

B.M. 484-65 Elev. 205.336
Set R.R. spk. in N. side of P.P.# 102608 E 135 Ft. W. of ℄ intersection Frwy. ℄ A.T. & S.F. R.R. spur line = 26 Ft. S. of ℄ Tracks 1.5 Ft. above G/G.

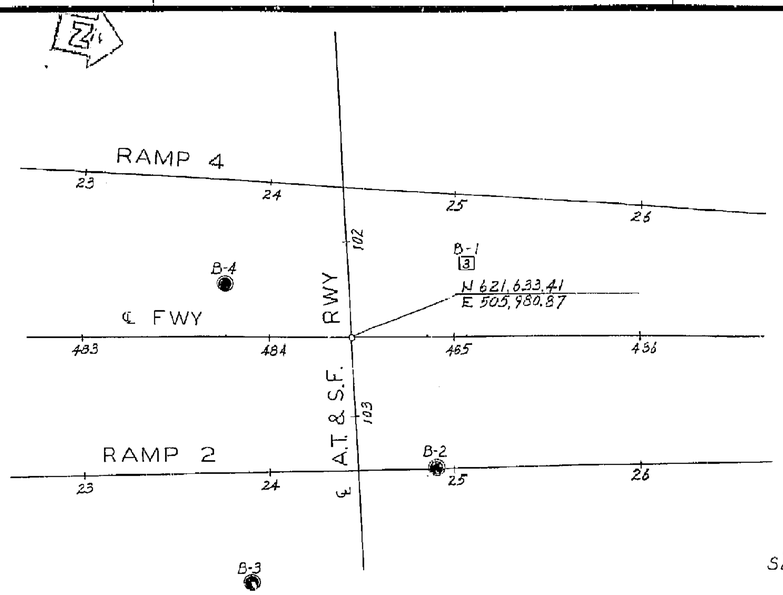

PLAN
Scale: 1"=40'

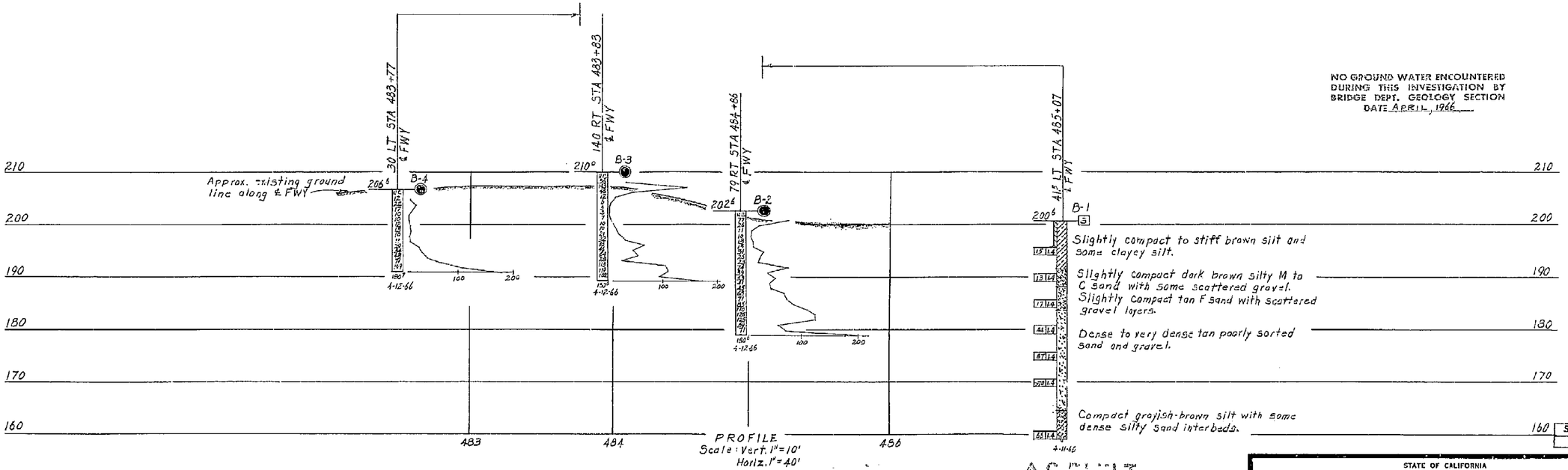

PROFILE
Scale: Vert. 1"=10'
Horiz. 1"=40'

NO GROUND WATER ENCOUNTERED DURING THIS INVESTIGATION BY BRIDGE DEPT. GEOLOGY SECTION
DATE APRIL, 1966

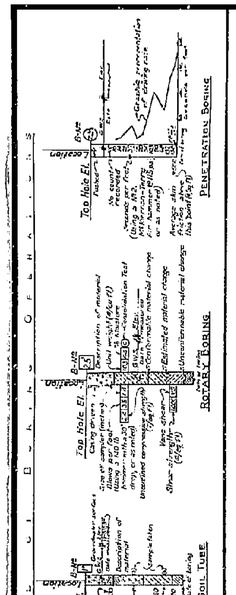

NOTE: Classification of earth material as shown on this sheet is based upon field inspection and is not to be construed to imply mechanical analysis.

FIELD STUDY	H.D. Cheang	4-12-66
DRAWN	W.F. Hall	4-25-66
CHECKED	H. McCain	4-26-66

Approved Recommended: C. Frank Scott, Engineering Geologist

BRIDGE DEPARTMENT
ENGINEERING GEOLOGY SECTION

AS BUILT PLANS
Contract No. 07-032124
Date Completed ____
Document No. 70000668

AS BUILT
CORRECTIONS BY Hixson 7-28-69
CONTRACT NO. 07-032124
DATE 4-30

STATE OF CALIFORNIA
DEPARTMENT OF PUBLIC WORKS
DIVISION OF HIGHWAYS

SOUTH PLACENTIA OVERHEAD

LOG OF TEST BORINGS

SCALE As Noted | BRIDGE 55-450 F/L | FILL | DRAWING 55450-13

SHEET 13 OF 18

Charge: 07208
W.A.: 032121

Disregard prints bearing earlier numbers

PREL. DRAWING NO. PR- 78/67

FILENAME => c0F031qe017.tif

DIST	COUNTY	ROUTE	POST MILES TOTAL PROJECT	SHEET NO.	TOTAL SHEETS
12	Ora	57	11.1/21.2	476	491

Kul Bhushan 12/28/89
GEOTECHNICAL PROFESSIONAL
10-29-90
PLANS APPROVAL DATE

REGISTERED PROFESSIONAL ENGINEER — KUL BHUSHAN — No. GE 000144 — Exp. 12/31/1989 — GEOTECHNICAL — STATE OF CALIFORNIA

GEOFON, INC.
5552 CERRITOS AVENUE, SUITE B
CYPRESS, CALIFORNIA
JOB NO.: 88-351

DIVISION OF ENGINEERING SERVICES - GEOTECHNICAL SERVICES

As-Built Log of Test Borings sheet is considered an informational document only. As such, the State of California registration seal with signature, license number and registration certificate expiration date confirm that this is a true and accurate copy of the original document. This drawing is available and presented only for the convenience of any bidder, contractor or other interested party.

DIST.	COUNTY	ROUTE	POST MILES -TOTAL PROJECT	Sheet No.	Total Sheets
12	Ora	57	16.2/18.6	439	960

Lino Cheang. 06/29/09
REGISTERED CIVIL ENGINEER — DATE

RETAINING WALL NO. 486

LOG OF TEST BORINGS NO. 9 | R-27

NOTE: A COPY OF THIS LOG OF TEST BORINGS IS AVAILABLE AT OFFICE OF STRUCTURE MAINTENANCE AND INVESTIGATIONS, SACRAMENTO, CALIFORNIA

CU: 12 - EA: 0F0311 | BRIDGE No. X | Sheet | of

To accompany plans dated 12-14-09

REGISTERED PROFESSIONAL ENGINEER — LINO C. CHEANG — NO. GE 2345 — EXP. 9/30/09 — GEOTECHNICAL — STATE OF CALIFORNIA

(BRIDGE NO.55-457)
CROWTHER AVENUE UNDERCROSSING

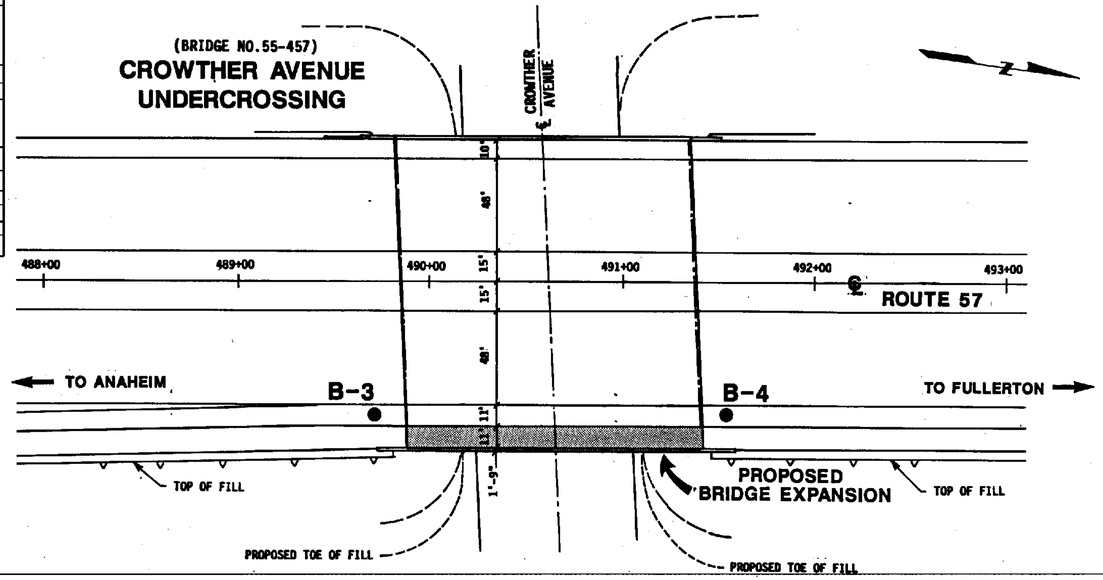

PLAN
SCALE: 1"=40'

PROFILE
VERTICAL SCALE: 1"=10'
HORIZONTAL SCALE: 1"=20'

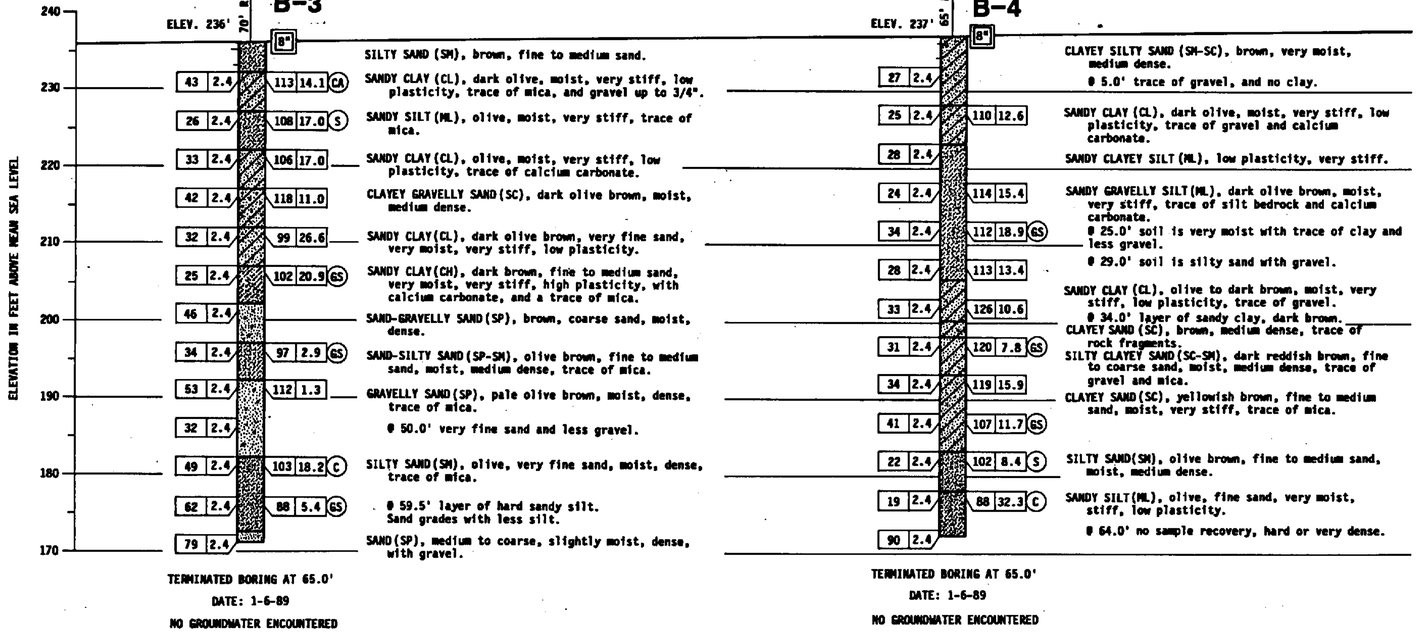

BM 535-D-70 ELEVATION 257.37

FOUND CHISELED CROSS ON TOP OF THE NW ANCHOR BOLT OF A SIGN BASE 77 FEET EASTERLY OF THE CENTERLINE OF ROUTE 57 (ORANGE FREEWAY) STATION 535+60 AND 105 FEET NORTHERLY OF THE CENTERLINE OF NUTWOOD AVE..

AS BUILT NO AS BUILT CHANGES
J. PINHEIRO
CORRECTIONS BY I. PANGLE
CONTRACT NO. 12-020184
DATE 11-24-92

LEGEND OF BORING OPERATIONS

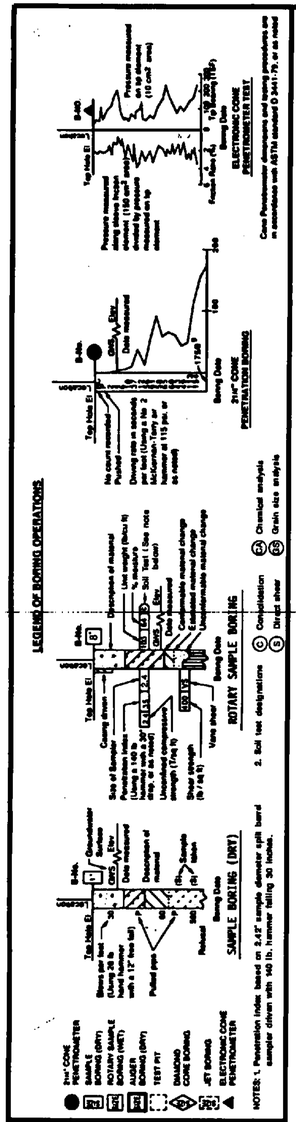

LEGEND OF EARTH MATERIALS

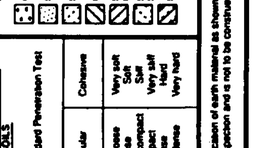

CONSISTENCY CLASSIFICATION FOR SOILS
According to the Standard Penetration Test

Cohesive	Very soft	0-4
	Soft	5-9
	Stiff	10-19
	Very stiff	20-34
	Hard	35-69
	Very hard	>70
Granular	Very loose	0-4
	Loose	5-9
	Slightly compact	10-19
	Compact	20-34
	Dense	35-69
	Very dense	>70

Penetration Index (Blows / Ft)

NOTE: Classification of earth material as shown on this sheet is based upon field inspection and is not to be construed to imply mechanical analysis.

DESIGN OVERSIGHT — SIGN OFF DATE 8-22-92
DRAWN BY B.BASMADJIAN
CHECKED BY H.ABDALLAH
S. MOHAMAD — FIELD INVESTIGATOR — DATE 12-28-89
PREPARED FOR THE STATE OF CALIFORNIA DEPARTMENT OF TRANSPORTATION
PROJECT ENGINEER
ORIGINAL SCALE IN INCHES FOR REDUCED PLANS 0 1 2 3
CU 12208
EA 020180
BRIDGE NO. 55-457
POST MILE 16.8
CROWTHER AVE. UNDERCROSSING (WIDEN)
LOG OF TEST BORINGS
DISREGARD PRINTS BEARING EARLIER REVISION DATES →
REVISION DATES (PRELIMINARY STAGE ONLY)
SHEET 8 OF 9
FILENAME => c0F031qe018.tif
c0F031qe018.tif

DIST	COUNTY	ROUTE	POST MILES – TOTAL PROJECT	SHEET No.	TOTAL SHEETS
12	Ora	57	11.1/21.2	477	491

N 622 234 795
E 502, 540. 385

BENCH MARK

BM 491L-98 Elev. 206.51

Set 3/4 in. N. side Crowther Ave. @ BCR at W. corner S. of Placentia Ave 292 W. of E. Fwy. 32 N. of ℄ Crowther Ave.

B-4 B-1 B-3 B-5 B-2

℄ FWY. RTE. 57

489 490 492 493

DIVISION OF ENGINEERING SERVICES - GEOTECHNICAL SERVICES					
As-Built Log of Test Borings sheet is considered an informational document only. As such, the State of California registration seal with signature, license number and registration certificate expiration date confirm that this is a true and accurate copy of the original document. This drawing is available and presented only for the convenience of any bidder, contractor or other interested party.					
DIST.	COUNTY	ROUTE	POST MILES -TOTAL PROJECT	Sheet No.	Total Sheets
12	Ora	57	16.2/18.6	440	960
Lino Cheang REGISTERED CIVIL ENGINEER			06/29/09 DATE		
RETAINING WALL NO. 486					
LOG OF TEST BORINGS NO. 10					R-28
NOTE: A COPY OF THIS LOG OF TEST BORINGS IS AVAILABLE AT OFFICE OF STRUCTURE MAINTENANCE AND INVESTIGATIONS, SACRAMENTO, CALIFORNIA		CU: 12 EA: 0F0311		BRIDGE No. X	
				Sheet	of

To accompany plans dated 12-14-09

REGISTERED PROFESSIONAL ENGINEER LINO C. CHEANG NO. GE 2345 EXP. 9/30/09 GEOTECHNICAL STATE OF CALIFORNIA

AS - BUILT PLAN — FOR INFORMATION ONLY

Kul Bhushan
GEOTECHNICAL PROFESSIONAL
DATE APPROVED 10-29-90

CROWTHER AVENUE UC (WIDEN)

LOG OF TEST BORINGS

CU: ~~12208~~	BRIDGE No.
EA: 020181	55 - 457

REGISTERED PROFESSIONAL ENGINEER KUL BHUSHAN No GE 000144 Exp. 12-31-93 GEOTECHNICAL STATE OF CALIFORNIA

PLAN
Scale: 1" = 20'

℄ CROWTHER AVE.

AS BUILT

CORRECTIONS BY _____

CONTRACT NO. _____

DATE _____

AS BUILT PLANS
Contract No. 07-052124
Date Completed _____
Document No. 70000663

AS BUILT NO AS BUILT CHANGES
CONTRACT NUMBER 12- 020184
RESIDENT ENGINEER J. MINEIRO & I. PAINGLE
COMPLETION DATE 11-24-92

PROFILE
Scale: Vert. 1" = 10'
Horiz. 1" = 20'

NO GROUND WATER ENCOUNTERED DURING THIS INVESTIGATION BY BRIDGE DEPT. GEOLOGY SECTION DATE NOV & DEC 1965

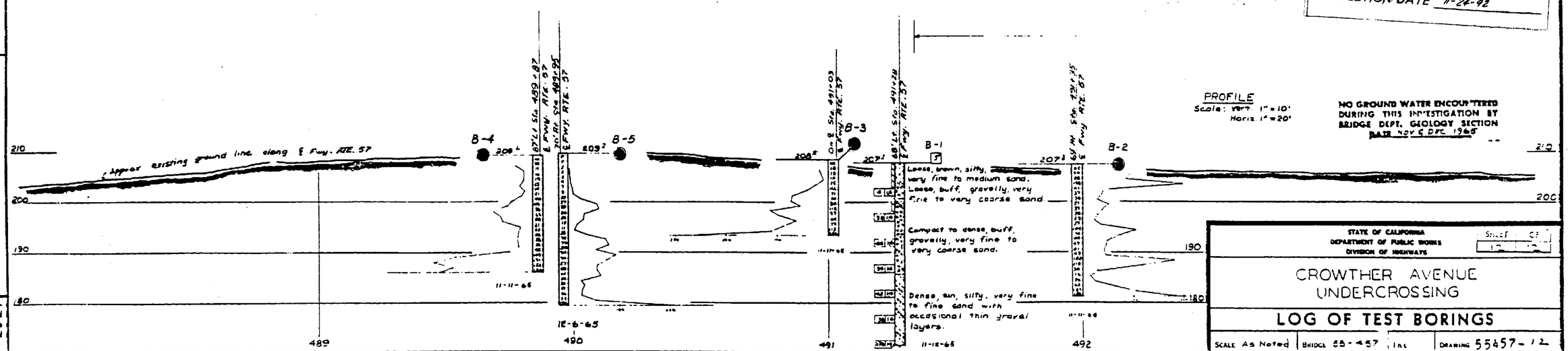

STATE OF CALIFORNIA
DEPARTMENT OF PUBLIC WORKS
DIVISION OF HIGHWAYS
Sheet ___ of ___

CROWTHER AVENUE UNDERCROSSING

LOG OF TEST BORINGS

SCALE As Noted | BRIDGE 55-457 INL | DRAWING 55457-12

Charge: 07208
W.A.: 032121

Shrinkage prints bearing earlier revisions →

PREL. DRAWING NO. PR- 79/1

SHEET	OF
9	9

FILENAME => c0F031qe019.tif

LEGEND OF BORING OPERATIONS

Pressuremeter
24" Cone Penetrometer
Borehole boring (dry)
Rotary boring (wet)
Auger boring (dry)
Jet Boring
Core Boring
Test pit
Elevation Datum
Bottom of Boring
1" Soil Tube

LEGEND OF EARTH MATERIALS

Gravel
Sand
Silt
Clay
Silty Clay or Clayey Silt
Peat and Organic Matter
Fill Material
Igneous Rock
Sedimentary Rock
Sandy Clay or Clayey Sand
Sandy Silt or Silty Sand
Metamorphic Rock

CLASSIFICATION OF MATERIAL BASED ON STANDARD GRADE SIZE LIMITS

Diagram showing the sizes established for sands and combinations used in describing the constituents of clay soils. The sizes of the particles are drawn to the scale shown, viz. the largest particle in the "gravel" size group is 3 inches in diameter, the largest particle in the "coarse" sand size group is 1/4 inch in diameter, etc. The "boundary sizes" for "coarse", "medium" and "fine" sand, and for "silt" and "clay" are also shown. Refer to standard grade size limits.

NOTE: Classification of earth material as shown on this sheet is based upon field inspection and is not to be construed to imply geotechnical analysis.

BENCHMARKS:

Vertical Datum NAVD 88

Designation: 1L-54-82 Elev = 153.171
Described by OCS 2002 - Found 3¾" OCS Aluminum Benchmark Disk Stamped "1L-54-82", set in the Top of a 6 in. by 6 in. Concrete Post. Monument is located along the Westerly Levee of the Santa Ana River, 0.25 Miles Northerly along Levee from the Centerline of Orangewood Avenue, 200 ft. Northeasterly of the Easterly Leg of the Anaheim Angels 200 ft. tall sign, 69 ft. Westerly of the Centerline of the Bike Trail and 1.5 ft. Westerly of a Steel OCS Witness Post. Monument is set 0.3 below the Ground.

Designation: 2G-25-70 Elev = 275.872
Described by OCS 2003 - Found 3¾" OCS Aluminum Benchmark Disk Stamped "2G-25-70", set in the Southeasterly Corner of a 4 ft by 6 ft Concrete Catch Basin. Monument is Located in the Northwesterly Corner of the Intersection of Yorba Linda Boulevard and Deerpark Drive, 75 ft Westerly of the Centerline of Deerpark and 46 ft Northerly of the Centerline of Yorba Linda. Monument is set Level with the Sidewalk.

Dist	COUNTY	ROUTE	POST MILES TOTAL PROJECT	SHEET No.	TOTAL SHEETS
12	Ora	57	16.2/18.6	441	960

REGISTERED CIVIL ENGINEER — DATE 7/15/09

12-14-09
PLANS APPROVAL DATE

REGISTERED PROFESSIONAL ENGINEER — Chien-Tai Yang — No. C 66394 — Exp. 6-30-10 — CIVIL — STATE OF CALIFORNIA

THE STATE OF CALIFORNIA OR ITS OFFICERS OR AGENTS SHALL NOT BE RESPONSIBLE FOR THE ACCURACY OR COMPLETENESS OF SCANNED COPIES OF THIS PLAN SHEET.

ORANGE COUNTY TRANSPORTATION AUTHORITY
550 S. MAIN STREET
ORANGE, CA 92863-1584

EARTH MECHANICS, INC.
17660 NEWHOPE STREET, SUITE E
FOUNTAIN VALLEY, CA 92708

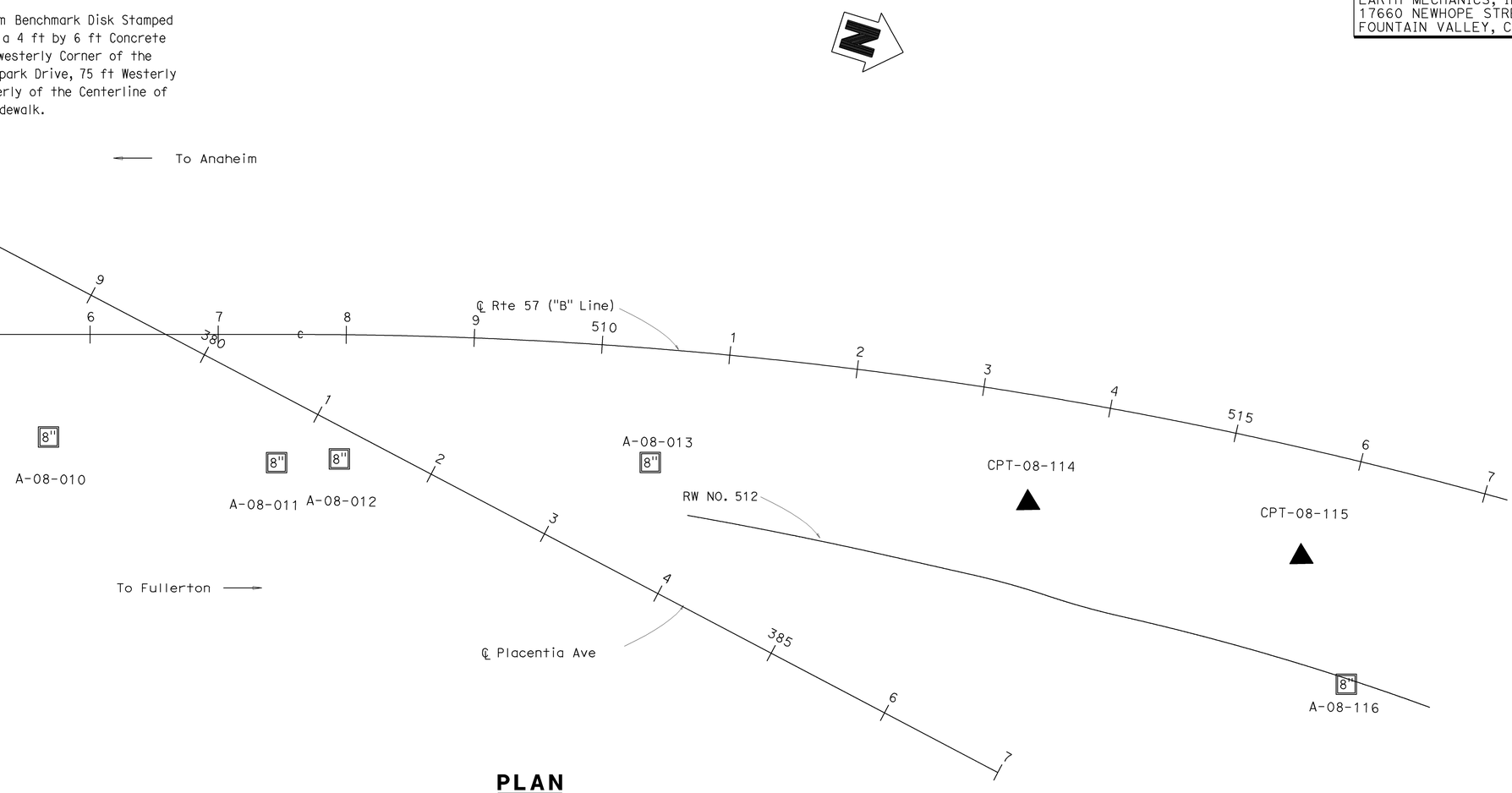

PLAN
1" = 50'

DESIGN OVERSIGHT	DRAWN BY: J.Fang	FIELD INVESTIGATION BY:	PREPARED FOR THE STATE OF CALIFORNIA DEPARTMENT OF TRANSPORTATION	C. Yang	BRIDGE NO.
SIGN OFF DATE	CHECKED BY: L.Cheang	R.Jie		PROJECT ENGINEER	POST MILES 16.2/18.6

RETAINING WALL NO. 512
LOG OF TEST BORINGS NO. 1 — R-29

DESIGN GENERAL PLAN SHEET (ENGLISH) (REV. 2/25/05)
ORIGINAL SCALE IN INCHES FOR REDUCED PLANS 0 1 2 3
CU 12
EA 0F0311
DISREGARD PRINTS BEARING EARLIER REVISION DATES
REVISION DATES (PRELIMINARY STAGE ONLY): 4/30/09
SHEET OF

FILE => c0F031qe020.dgn

USERNAME => frrene DATE PLOTTED => 17-DEC-2009 TIME PLOTTED => 07:01

Dist	COUNTY	ROUTE	POST MILES TOTAL PROJECT	SHEET No.	TOTAL SHEETS
12	Ora	57	16.2/18.6	442	960

REGISTERED CIVIL ENGINEER — DATE 7/15/09

12-14-09
PLANS APPROVAL DATE

REGISTERED PROFESSIONAL ENGINEER — Chien-Tai Yang — No. C 66394 — Exp. 6-30-10 — CIVIL — STATE OF CALIFORNIA

THE STATE OF CALIFORNIA OR ITS OFFICERS OR AGENTS SHALL NOT BE RESPONSIBLE FOR THE ACCURACY OR COMPLETENESS OF SCANNED COPIES OF THIS PLAN SHEET.

ORANGE COUNTY TRANSPORTATION AUTHORITY
550 S. MAIN STREET
ORANGE, CA 92863-1584

EARTH MECHANICS, INC.
17660 NEWHOPE STREET, SUITE E
FOUNTAIN VALLEY, CA 92708

FOR PLAN VIEW SEE "RETAINING WALL NO. 512, LOG OF TEST BORINGS NO. 1"

NOTES:

(1) This LOTB sheet was prepared in accordance with the Caltrans Soil and Rock Logging, Classification and Presentation Manual (June 2007)
(2) 2.4" samples were taken using a California Modified Sampler.
(3) An automatic trip hammer system consisting of a hammer weight of 140 lbs falling a distance of 30" was used to advance the drive sampler.
(4) Conversion factor from 2.4" Modified California Ring Sampler blowcounts to Standard Penetration Test (SPT) blowcounts is 0.5.

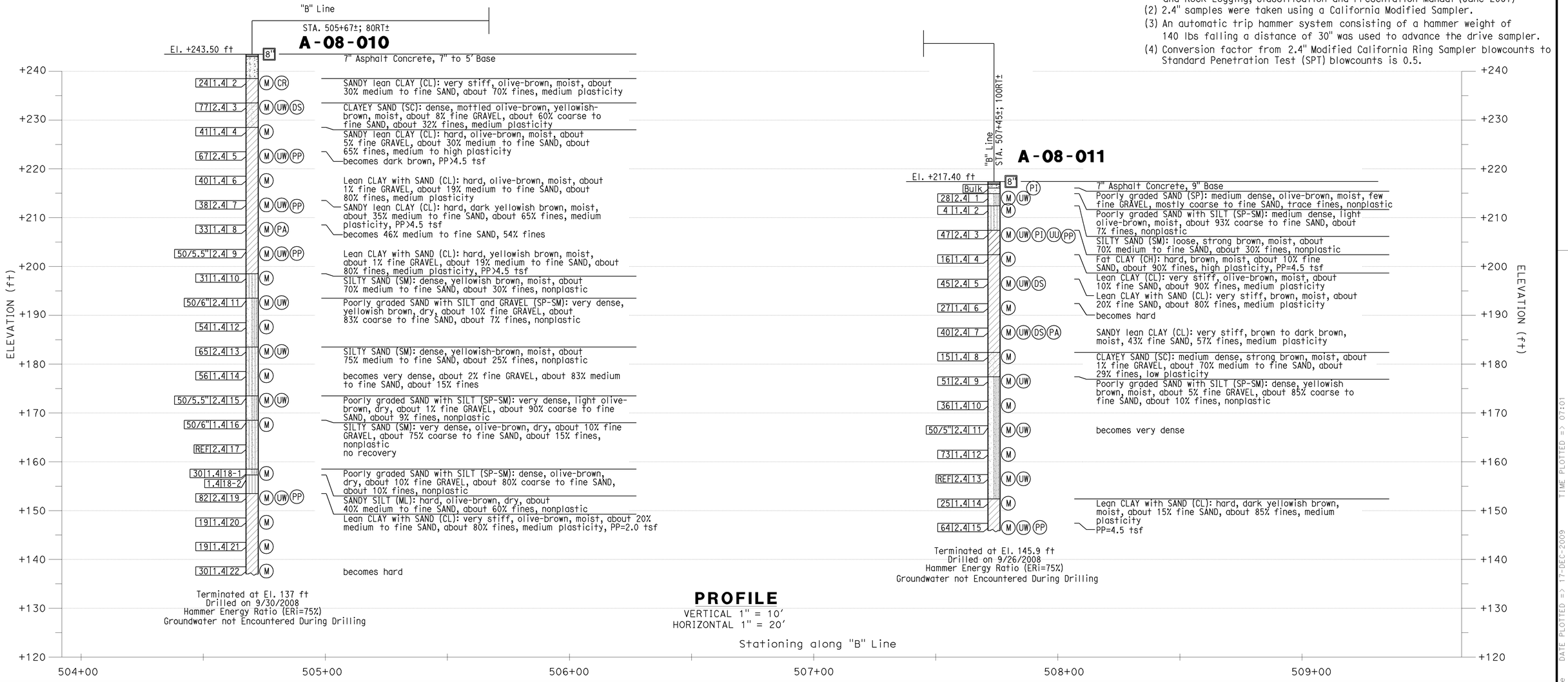

PROFILE

VERTICAL 1" = 10'
HORIZONTAL 1" = 20'

DESIGN OVERSIGHT	DRAWN BY: J.Fang	FIELD INVESTIGATION BY:	PREPARED FOR THE STATE OF CALIFORNIA DEPARTMENT OF TRANSPORTATION	C. Yang PROJECT ENGINEER	BRIDGE NO.	RETAINING WALL NO. 512
SIGN OFF DATE	CHECKED BY: L.Cheang	R.Jie			POST MILES 16.2/18.6	LOG OF TEST BORINGS NO. 2 — R-30

DESIGN GENERAL PLAN SHEET (ENGLISH) (REV. 2/25/05)

ORIGINAL SCALE IN INCHES FOR REDUCED PLANS 0 1 2 3

CU 12
EA 0F0311

DISREGARD PRINTS BEARING EARLIER REVISION DATES →

REVISION DATES (PRELIMINARY STAGE ONLY): 4/30/09

SHEET OF

FILE => c0F031qe021.dgn

DATE PLOTTED => 17-DEC-2009 TIME PLOTTED => 07:01
USERNAME => trrene

Dist	COUNTY	ROUTE	POST MILES TOTAL PROJECT	SHEET No.	TOTAL SHEETS
12	Ora	57	16.2/18.6	443	960

REGISTERED CIVIL ENGINEER — 7/15/09 DATE

12-14-09
PLANS APPROVAL DATE

REGISTERED PROFESSIONAL ENGINEER — Chien-Tai Yang — No. C 66394 — Exp. 6-30-10 — CIVIL — STATE OF CALIFORNIA

THE STATE OF CALIFORNIA OR ITS OFFICERS OR AGENTS SHALL NOT BE RESPONSIBLE FOR THE ACCURACY OR COMPLETENESS OF SCANNED COPIES OF THIS PLAN SHEET.

ORANGE COUNTY TRANSPORTATION AUTHORITY
550 S. MAIN STREET
ORANGE, CA 92863-1584

EARTH MECHANICS, INC.
17660 NEWHOPE STREET, SUITE E
FOUNTAIN VALLEY, CA 92708

FOR PLAN VIEW SEE "RETAINING WALL NO. 512, LOG OF TEST BORINGS NO. 1"

NOTES:

(1) This LOTB sheet was prepared in accordance with the Caltrans Soil and Rock Logging, Classification and Presentation Manual (June 2007)
(2) 2.4" samples were taken using a California Modified Sampler.
(3) An automatic trip hammer system consisting of a hammer weight of 140 lbs falling a distance of 30" was used to advance the drive sampler.
(4) Conversion factor from 2.4" Modified California Ring Sampler blowcounts to Standard Penetration Test (SPT) blowcounts is 0.5.

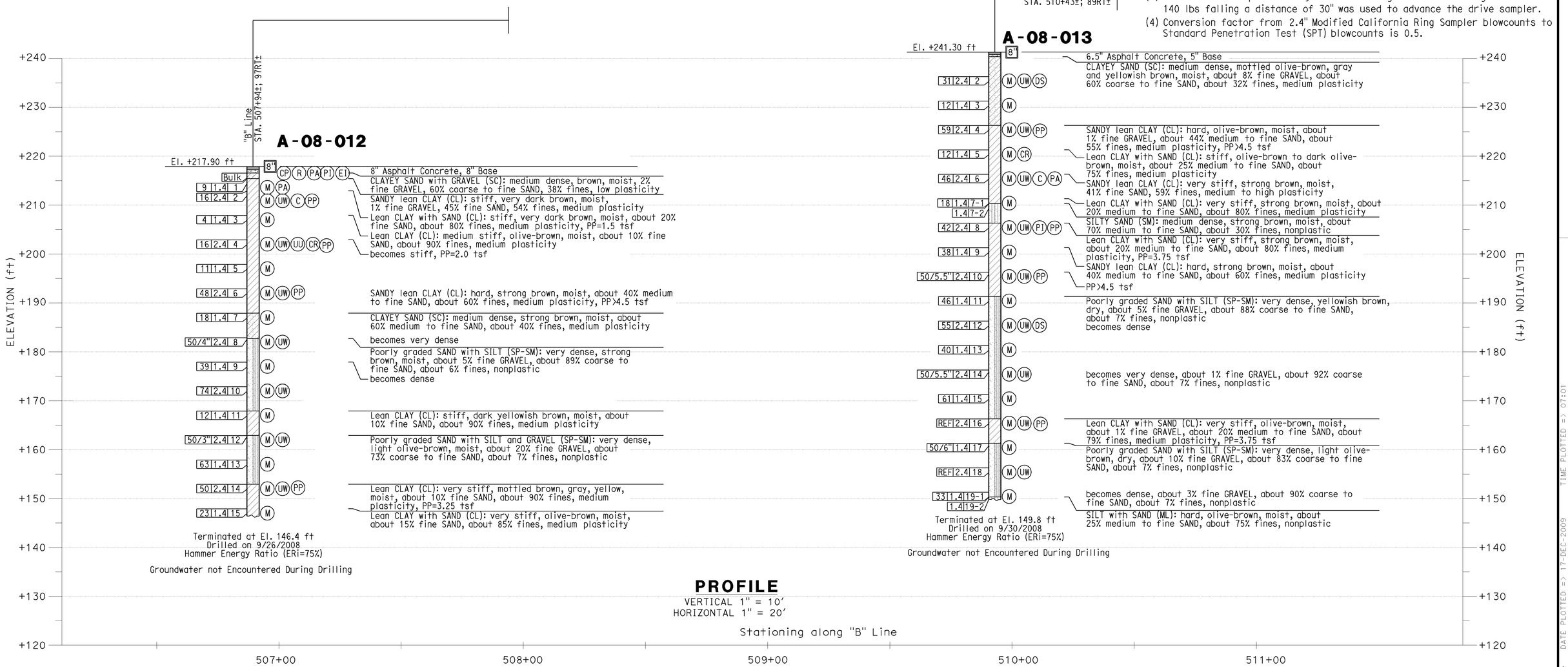

PROFILE

VERTICAL 1" = 10'
HORIZONTAL 1" = 20'

DESIGN OVERSIGHT	DRAWN BY: J.Fang	FIELD INVESTIGATION BY:	PREPARED FOR THE STATE OF CALIFORNIA DEPARTMENT OF TRANSPORTATION	C. Yang PROJECT ENGINEER	BRIDGE NO.
SIGN OFF DATE	CHECKED BY: L.Cheang	R.Jie			POST MILES 16.2/18.6

RETAINING WALL NO. 512
LOG OF TEST BORINGS NO. 3
R-31

DESIGN GENERAL PLAN SHEET (ENGLISH) (REV. 2/25/05)

ORIGINAL SCALE IN INCHES FOR REDUCED PLANS 0 1 2 3

CU 12
EA 0F0311

DISREGARD PRINTS BEARING EARLIER REVISION DATES →

REVISION DATES (PRELIMINARY STAGE ONLY): 4/30/09

SHEET OF

FILE => c0F031qe022.dgn

USERNAME => jtrrene DATE PLOTTED => 17-DEC-2009 TIME PLOTTED => 07:01

Dist	COUNTY	ROUTE	POST MILES TOTAL PROJECT	SHEET No.	TOTAL SHEETS
12	Ora	57	16.2/18.6	444	960

REGISTERED CIVIL ENGINEER — DATE 7/15/09

12-14-09
PLANS APPROVAL DATE

REGISTERED PROFESSIONAL ENGINEER — Chien-Tai Yang — No. C 66394 — Exp. 6-30-10 — CIVIL — STATE OF CALIFORNIA

THE STATE OF CALIFORNIA OR ITS OFFICERS OR AGENTS SHALL NOT BE RESPONSIBLE FOR THE ACCURACY OR COMPLETENESS OF SCANNED COPIES OF THIS PLAN SHEET.

ORANGE COUNTY TRANSPORTATION AUTHORITY
550 S. MAIN STREET
ORANGE, CA 92863-1584

EARTH MECHANICS, INC.
17660 NEWHOPE STREET, SUITE E
FOUNTAIN VALLEY, CA 92708

FOR PLAN VIEW SEE "RETAINING WALL NO. 512, LOG OF TEST BORINGS NO. 1"

NOTES:

(1) This LOTB sheet was prepared in accordance with the Caltrans Soil and Rock Logging, Classification and Presentation Manual (June 2007)

(2) 2.4" samples were taken using a California Modified Sampler.

(3) An automatic trip hammer system consisting of a hammer weight of 140 lbs falling a distance of 30" was used to advance the drive sampler.

(4) Conversion factor from 2.4" Modified California Ring Sampler blowcounts to Standard Penetration Test (SPT) blowcounts is 0.5.

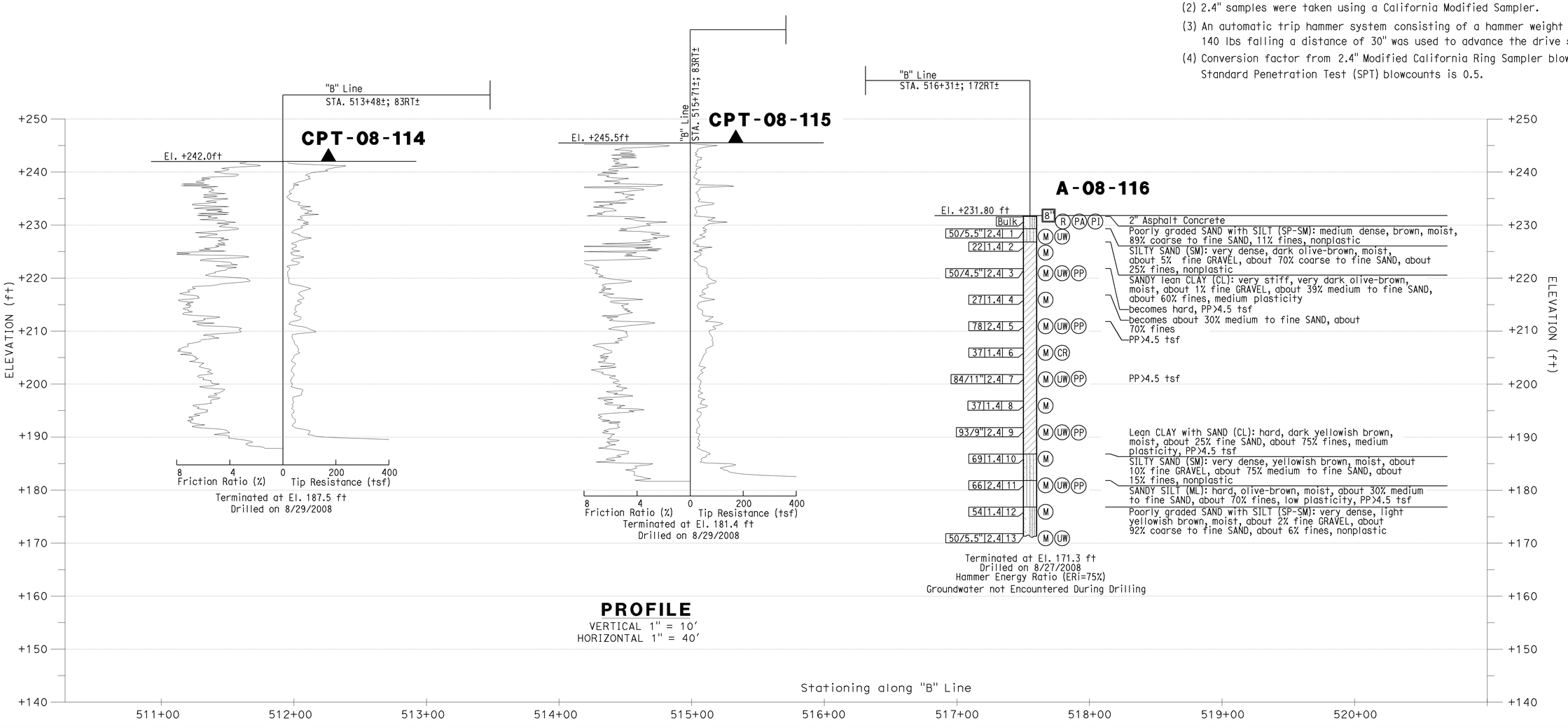

PROFILE
VERTICAL 1" = 10'
HORIZONTAL 1" = 40'

DESIGN OVERSIGHT SIGN OFF DATE	DRAWN BY: J.Fang CHECKED BY: L.Cheang	FIELD INVESTIGATION BY: R.Jie	PREPARED FOR THE STATE OF CALIFORNIA DEPARTMENT OF TRANSPORTATION	C.Yang PROJECT ENGINEER	BRIDGE NO. POST MILES 16.2/18.6

RETAINING WALL NO. 512
LOG OF TEST BORINGS NO. 4

R-32

DESIGN GENERAL PLAN SHEET (ENGLISH) (REV. 2/25/05)

ORIGINAL SCALE IN INCHES FOR REDUCED PLANS 0 1 2 3

CU 12
EA 0F0311

DISREGARD PRINTS BEARING EARLIER REVISION DATES →

REVISION DATES (PRELIMINARY STAGE ONLY): 4/30/09

SHEET OF

FILE => c0F031qe023.dgn

USERNAME => trrene DATE PLOTTED => 17-DEC-2009 TIME PLOTTED => 07:01

REFERENCE: CALTRANS SOIL & ROCK LOGGING, CLASSIFICATION, AND PRESENTATION MANUAL (JUNE 2007)

Dist	COUNTY	ROUTE	POST MILES TOTAL PROJECT	SHEET No.	TOTAL SHEETS
12	Ora	57	16.2/18.6	445	960

REGISTERED CIVIL ENGINEER — 7/15/09 DATE

12-14-09
PLANS APPROVAL DATE

REGISTERED PROFESSIONAL ENGINEER — Chien-Tai Yang — No. C 66394 — Exp. 6-30-10 — CIVIL — STATE OF CALIFORNIA

THE STATE OF CALIFORNIA OR ITS OFFICERS OR AGENTS SHALL NOT BE RESPONSIBLE FOR THE ACCURACY OR COMPLETENESS OF SCANNED COPIES OF THIS PLAN SHEET.

ORANGE COUNTY TRANSPORTATION AUTHORITY
550 S. MAIN STREET
ORANGE, CA 92863-1584

EARTH MECHANICS, INC.
17660 NEWHOPE STREET, SUITE E
FOUNTAIN VALLEY, CA 92708

CEMENTATION

Description	Criteria
Weak	Crumbles or breaks with handling or little finger pressure.
Moderate	Crumbles or breaks with considerable finger pressure.
Strong	Will not crumble or break with finger pressure.

BOREHOLE IDENTIFICATION

Symbol	Hole Type	Description
Size	A	Auger Boring
Size	R P	Rotary drilled boring Rotary percussion boring (air)
Size	R	Rotary drilled diamond core
Size	HD HA	Hand driven (1-inch soil tube) Hand Auger
●	D	Dynamic Cone Penetration Boring
▲	CPT	Cone Penetration Test (ASTM D 5778-95)
⬚	O	Other

Note: Size in inches.

CONSISTENCY OF COHESIVE SOILS

Description	Unconfined Compressive Strength (tsf)	Pocket Penetrometer Measurement (tsf)	Torvane Measurement (tsf)	Field Approximation
Very Soft	< 0.25	< 0.25	< 0.12	Easily penetrated several inches by fist
Soft	0.25 to 0.50	0.25 to 0.50	0.12 to 0.25	Easily penetrated several inches by thumb
Medium Stiff	0.50 to 1.0	0.50 to 1.0	0.25 to 0.50	Penetrated several inches by thumb with moderate effort
Stiff	1 to 2	1 to 2	0.50 to 1.0	Readily indented by thumb but penetrated only with great effort
Very Stiff	2 to 4	2 to 4	1.0 to 2.0	Readily indented by thumbnail
Hard	> 4.0	> 4.0	> 2.0	Indented by thumbnail with difficulty

PLASTICITY OF FINE-GRAINED SOILS

Description	Criteria
Nonplastic	A 1/8-inch thread cannot be rolled at any water content.
Low	The thread can barely be rolled and the lump cannot be formed when drier than the plastic limit.
Medium	The thread is easy to roll and not much time is required to reach the plastic limit. The thread cannot be rerolled after reaching the plastic limit. The lump crumbles when drier than the plastic limit.
High	It takes considerable time rolling and kneading to reach the plastic limit. The thread can be rerolled several times after reaching the plastic limit. The lump can be formed without crumbling when drier than the plastic limit.

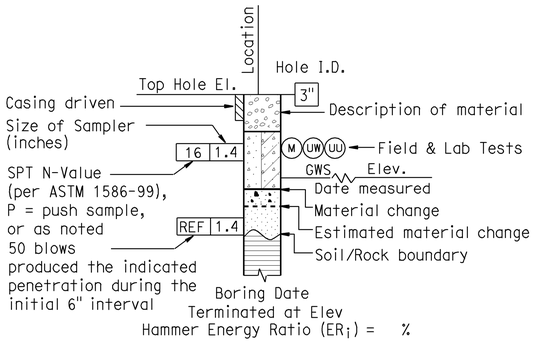

ROTARY BORING

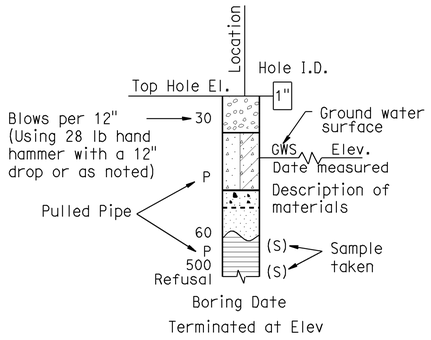

HAND BORING

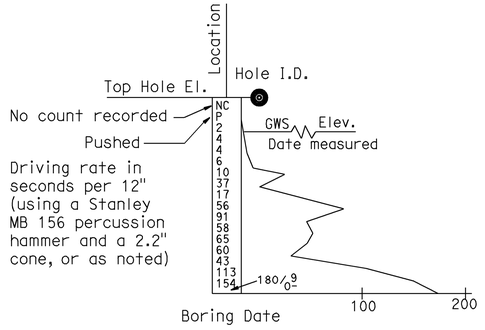

DYNAMIC CONE PENETRATION BORING

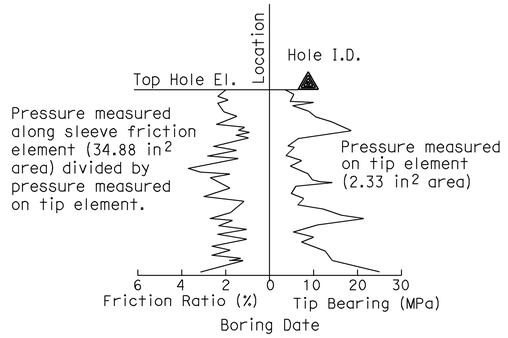

CONE PENETRATION TEST (CPT) SOUNDING

DESIGN OVERSIGHT SIGN OFF DATE	DRAWN BY: J.Fang CHECKED BY: L.Cheang	FIELD INVESTIGATION BY: R.Jie	PREPARED FOR THE STATE OF CALIFORNIA DEPARTMENT OF TRANSPORTATION	C. Yang PROJECT ENGINEER	BRIDGE NO. POST MILES 16.2/18.6	RETAINING WALL NO. 512 LOG OF TEST BORINGS NO. 5 — R-33
DESIGN GENERAL PLAN SHEET (ENGLISH) (REV. 2/25/05)	ORIGINAL SCALE IN INCHES FOR REDUCED PLANS 0 1 2 3			CU 12 EA 0F0311	DISREGARD PRINTS BEARING EARLIER REVISION DATES →	REVISION DATES (PRELIMINARY STAGE ONLY) — SHEET — OF

FILE => c0F031qe024.dgn

USERNAME => ttrone DATE PLOTTED => 17-DEC-2009 TIME PLOTTED => 07:02

REFERENCE: CALTRANS SOIL & ROCK LOGGING, CLASSIFICATION, AND PRESENTATION MANUAL (JUNE 2007)

GROUP SYMBOLS AND NAMES

Graphic/Symbol	Group Names	Graphic/Symbol	Group Names
GW	Well-graded GRAVEL Well-graded GRAVEL with SAND	CL	Lean CLAY Lean CLAY with SAND Lean CLAY with GRAVEL SANDY lean CLAY SANDY lean CLAY with GRAVEL GRAVELLY lean CLAY GRAVELLY lean CLAY with SAND
GP	Poorly graded GRAVEL Poorly graded GRAVEL with SAND		
GW-GM	Well-graded GRAVEL with SILT Well-graded GRAVEL with SILT and SAND	CL-ML	SILTY CLAY SILTY CLAY with SAND SILTY CLAY with GRAVEL SANDY SILTY CLAY SANDY SILTY CLAY with GRAVEL GRAVELLY SILTY CLAY GRAVELLY SILTY CLAY with SAND
GW-GC	Well-graded GRAVEL with CLAY (or SILTY CLAY) Well-graded GRAVEL with CLAY and SAND (or SILTY CLAY and SAND)		
GP-GM	Poorly graded GRAVEL with SILT Poorly graded GRAVEL with SILT and SAND	ML	SILT SILT with SAND SILT with GRAVEL SANDY SILT SANDY SILT with GRAVEL GRAVELLY SILT GRAVELLY SILT with SAND
GP-GC	Poorly graded GRAVEL with CLAY (or SILTY CLAY) Poorly graded GRAVEL with CLAY and SAND (or SILTY CLAY and SAND)		
GM	SILTY GRAVEL SILTY GRAVEL with SAND	OL	ORGANIC lean CLAY ORGANIC lean CLAY with SAND ORGANIC lean CLAY with GRAVEL SANDY ORGANIC lean CLAY SANDY ORGANIC lean CLAY with GRAVEL GRAVELLY ORGANIC lean CLAY GRAVELLY ORGANIC lean CLAY with SAND
GC	CLAYEY GRAVEL CLAYEY GRAVEL with SAND		
GC-GM	SILTY, CLAYEY GRAVEL SILTY, CLAYEY GRAVEL with SAND	OL	ORGANIC SILT ORGANIC SILT with SAND ORGANIC SILT with GRAVEL SANDY ORGANIC SILT SANDY ORGANIC SILT with GRAVEL GRAVELLY ORGANIC SILT GRAVELLY ORGANIC SILT with SAND
SW	Well-graded SAND Well-graded SAND with GRAVEL		
SP	Poorly graded SAND Poorly graded SAND with GRAVEL	CH	Fat CLAY Fat CLAY with SAND Fat CLAY with GRAVEL SANDY fat CLAY SANDY fat CLAY with GRAVEL GRAVELLY fat CLAY GRAVELLY fat CLAY with SAND
SW-SM	Well-graded SAND with SILT Well-graded SAND with SILT and GRAVEL		
SW-SC	Well-graded SAND with CLAY (or SILTY CLAY) Well-graded SAND with CLAY and GRAVEL (or SILTY CLAY and GRAVEL)	MH	Elastic SILT Elastic SILT with SAND Elastic SILT with GRAVEL SANDY elastic SILT SANDY elastic SILT with GRAVEL GRAVELLY elastic SILT GRAVELLY elastic SILT with SAND
SP-SM	Poorly graded SAND with SILT Poorly graded SAND with SILT and GRAVEL		
SP-SC	Poorly graded SAND with CLAY (or SILTY CLAY) Poorly graded SAND with CLAY and GRAVEL (or SILTY CLAY and GRAVEL)	OH	ORGANIC fat CLAY ORGANIC fat CLAY with SAND ORGANIC fat CLAY with GRAVEL SANDY ORGANIC fat CLAY SANDY ORGANIC fat CLAY with GRAVEL GRAVELLY ORGANIC fat CLAY GRAVELLY ORGANIC fat CLAY with SAND
SM	SILTY SAND SILTY SAND with GRAVEL		
SC	CLAYEY SAND CLAYEY SAND with GRAVEL	OH	ORGANIC elastic SILT ORGANIC elastic SILT with SAND ORGANIC elastic SILT with GRAVEL SANDY ORGANIC elastic SILT SANDY ORGANIC elastic SILT with GRAVEL GRAVELLY ORGANIC elastic SILT GRAVELLY ORGANIC elastic SILT with SAND
SC-SM	SILTY, CLAYEY SAND SILTY, CLAYEY SAND with GRAVEL		
PT	PEAT	OL/OH	ORGANIC SOIL ORGANIC SOIL with SAND ORGANIC SOIL with GRAVEL SANDY ORGANIC SOIL SANDY ORGANIC SOIL with GRAVEL GRAVELLY ORGANIC SOIL GRAVELLY ORGANIC SOIL with SAND
	COBBLES COBBLES and BOULDERS BOULDERS		

FIELD AND LABORATORY TESTING

- (C) Consolidation (ASTM D 2435)
- (CL) Collapse Potential (ASTM D 5333)
- (CP) Compaction Curve (CTM 216)
- (CR) Corrosivity Testing (CTM 643, CTM 422, CTM 417)
- (CU) Consolidated Undrained Triaxial (ASTM D 4767)
- (DS) Direct Shear (ASTM D 3080)
- (EI) Expansion Index (ASTM D 4829)
- (M) Moisture Content (ASTM D 2216)
- (OC) Organic Content-% (ASTM D 2974)
- (P) Permeability (CTM 220)
- (PA) Particle Size Analysis (ASTM D 422)
- (PI) Plasticity Index (AASHTO T 90) Liquid Limit (AASHTO T 89)
- (PL) Point Load Index (ASTM D 5731)
- (PM) Pressure Meter
- (PP) Pocket Penetrometer
- (R) R-Value (CTM 301)
- (SE) Sand Equivalent (CTM 217)
- (SG) Specific Gravity (AASHTO T 100)
- (SL) Shrinkage Limit (ASTM D 427)
- (SW) Swell Potential (ASTM D 4546)
- (TV) Pocket Torvane
- (UC) Unconfined Compression-Soil (ASTM D 2166) Unconfined Compression-Rock (ASTM D 2938)
- (UU) Unconsolidated Undrained Triaxial (ASTM D 2850)
- (UW) Unit Weight (ASTM D 4767)
- (VS) Vane Shear (AASHTO T 223)

Dist	COUNTY	ROUTE	POST MILES TOTAL PROJECT	SHEET No.	TOTAL SHEETS
12	Ora	57	16.2/18.6	446	960

REGISTERED CIVIL ENGINEER — 7/15/09 DATE

12-14-09
PLANS APPROVAL DATE

REGISTERED PROFESSIONAL ENGINEER — Chien-Tai Yang — No. C 66394 — Exp. 6-30-10 — CIVIL — STATE OF CALIFORNIA

THE STATE OF CALIFORNIA OR ITS OFFICERS OR AGENTS SHALL NOT BE RESPONSIBLE FOR THE ACCURACY OR COMPLETENESS OF SCANNED COPIES OF THIS PLAN SHEET.

ORANGE COUNTY TRANSPORTATION AUTHORITY
550 S. MAIN STREET
ORANGE, CA 92863-1584

EARTH MECHANICS, INC.
17660 NEWHOPE STREET, SUITE E
FOUNTAIN VALLEY, CA 92708

APPARENT DENSITY OF COHESIONLESS SOILS

Description	SPT N_{60} (Blows / 12 inches)
Very loose	0 - 4
Loose	5 - 10
Medium Dense	11 - 30
Dense	31 - 50
Very Dense	> 50

MOISTURE

Description	Criteria
Dry	Absence of moisture, dusty, dry to the touch
Moist	Damp but no visible water
Wet	Visible free water, usually soil is below water table

PERCENT OR PROPORTION OF SOILS

Description	Criteria
Trace	Particles are present but estimated to be less than 5%
Few	5 to 10%
Little	15 to 25%
Some	30 to 45%
Mostly	50 to 100%

PARTICLE SIZE

Description		Size
Boulder		> 12"
Cobble		3" to 12"
Gravel	Coarse	3/4" to 3"
	Fine	No. 4 to 3/4"
Sand	Coarse	No. 10 to No. 4
	Medium	No. 40 to No. 10
	Fine	No. 200 to No. 40

DESIGN OVERSIGHT

SIGN OFF DATE

DRAWN BY: J.Fang

CHECKED BY: L.Cheang

FIELD INVESTIGATION BY: R.Jie

PREPARED FOR THE STATE OF CALIFORNIA DEPARTMENT OF TRANSPORTATION

C. Yang
PROJECT ENGINEER

BRIDGE NO.

POST MILES 16.2/18.6

RETAINING WALL NO. 512
LOG OF TEST BORINGS NO. 6

R-34

DESIGN GENERAL PLAN SHEET (ENGLISH) (REV. 2/25/05)

ORIGINAL SCALE IN INCHES FOR REDUCED PLANS 0 1 2 3

CU 12
EA 0F0311

DISREGARD PRINTS BEARING EARLIER REVISION DATES →

REVISION DATES (PRELIMINARY STAGE ONLY)

SHEET OF

FILE => c0F031qe025.dgn

USERNAME => ttrent DATE PLOTTED => 17-DEC-2009 TIME PLOTTED => 07:02

FED. ROAD DIV. NO.	STATE	F. A. PROJECT NO.	SHEET NO.	TOTAL SHEETS
7	CALIF.			

DIST.	COUNTY	ROUTE	SECTION	SHEET NO.	TOTAL SHEETS
07	ORA	57	16.2/18.6	173	197

Orville Abbott — Chris Christen — Ludvik Kost

DATE APPROVED August 28, 1967

BENCH MARK

B.M. # 505R-65 Elev. 202.22
Sel bolt spk. in E. side of P.P. # 961387 203 ft. E. of ℄ Sta. 379+25 Placentia & 150 ft. S. of ℄ Santa Fe Ave. 1' above o/g

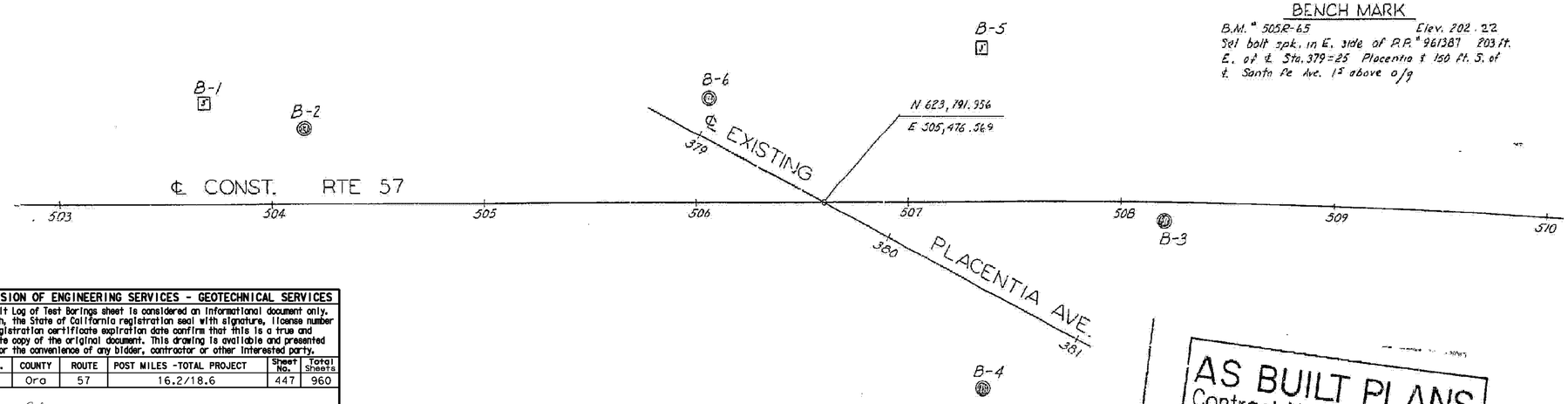

PLAN
Scale 1" = 30'

AS BUILT PLANS
Contract No. 07-032124
Date Completed
Document No. 70000668

DIVISION OF ENGINEERING SERVICES - GEOTECHNICAL SERVICES					
As-Built Log of Test Borings sheet is considered an informational document only. As such, the State of California registration seal with signature, license number and registration certificate expiration date confirm that this is a true and accurate copy of the original document. This drawing is available and presented only for the convenience of any bidder, contractor or other interested party.					
DIST.	COUNTY	ROUTE	POST MILES - TOTAL PROJECT	Sheet No.	Total Sheets
12	Ora	57	16.2/18.6	447	960
Lino Cheang — REGISTERED CIVIL ENGINEER			06/29/09 — DATE		
RETAINING WALL NO. 512					
LOG OF TEST BORINGS NO. 7					R-35
NOTE: A COPY OF THIS LOG OF TEST BORINGS IS AVAILABLE AT OFFICE OF STRUCTURE MAINTENANCE AND INVESTIGATIONS, SACRAMENTO, CALIFORNIA			CU: 12 EA: 0F0311	BRIDGE No. X	
				Sheet	of
To accompany plans dated 12-14-09					

REGISTERED PROFESSIONAL ENGINEER — LINO C. CHEANG — NO. GE 2345 — EXP. 9/30/09 — GEOTECHNICAL — STATE OF CALIFORNIA

NO GROUND WATER ENCOUNTERED DURING THIS INVESTIGATION BY BRIDGE DEPT. GEOLOGY SECTION
DATE April 1966

AS BUILT
CORRECTIONS BY Hixson dtd 7-29-69
CONTRACT NO. 07-032124
DATE 5-11-69

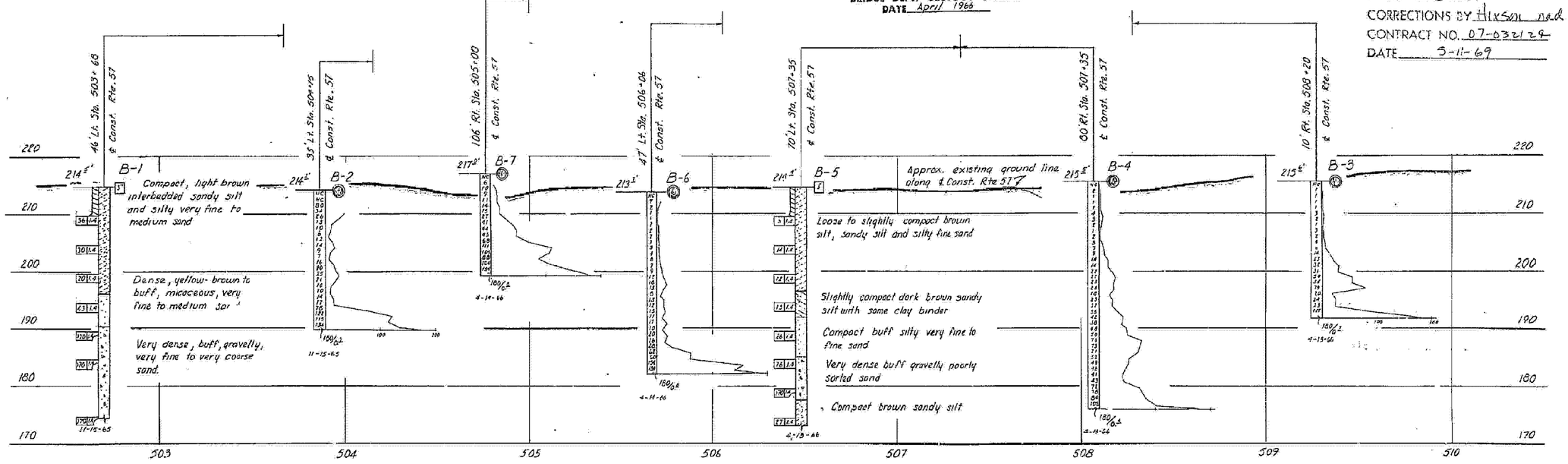

PROFILE
Scale Vert. 1" = 10'
Horiz. 1" = 30'

SHEET	OF
26	26

LEGEND

Penetrometer; 2½" Cone Penetrometer; Sampler, Boring (Dry); Rotary Boring (Wet); Auger Boring (Dry); Jet Boring; Core Boring; Test Pit

LEGEND OF EARTH MATERIALS

Gravel; Sand; Silt; Clay; Silty Clay or Clayey Silt; Peat and/or Organic Matter; Fill Material; Igneous Rock; Sandy Clay or Clayey Sand; Sandy Silt or Silty Sand; Sedimentary Rock; Metamorphic Rock

CLASSIFICATION OF MATERIAL, BASED ON STANDARD GRADE SIZE LIMITS

Diagram showing the basis for estimates of grade size distribution used in determination of class names.
If gravel is present, appreciable, or predominant, it should be added to the class name, viz. "gravelly sand". The terms "coarse", "medium" and "fine" may be used to describe sand, silt and gravel. Refer to standard grade size limits.

NOTE: Classification of earth material as shown on this sheet is based upon field inspection and is not to be construed to imply mechanical analysis.

FIELD STUDY	By: D. CRAWFORD	4-14-66
DRAWN	By: M. ALLREAD	4-20-66
CHECKED	By: W. CAIN	5-10-66

Approved Recommended by: Engineering Geologist

BRIDGE DEPARTMENT
ENGINEERING GEOLOGY SECTION

STATE OF CALIFORNIA
DEPARTMENT OF PUBLIC WORKS
DIVISION OF HIGHWAYS

PLACENTIA AVENUE UNDERCROSSING

LOG OF TEST BORINGS

SCALE As Noted	BRIDGE 55-460	FILE	DRAWING 55460-2

173

FILENAME => c0F031qe026.tif

Charge 07208
W.A. 032181

Disregard prints bearing earlier numbers

PREL. DRAWING NO. PR-

BENCHMARKS:

Vertical Datum NAVD 88

Designation: 1L-54-82 Elev = 153.171
Described by OCS 2002 - Found 3¾" OCS Aluminum Benchmark Disk Stamped "1L-54-82", set in the Top of a 6 in. by 6 in. Concrete Post. Monument is located along the Westerly Levee of the Santa Ana River, 0.25 Miles Northerly along Levee from the Centerline of Orangewood Avenue, 200 ft. Northeasterly of the Easterly Leg of the Anaheim Angels 200 ft. tall sign, 69 ft. Westerly of the Centerline of the Bike Trail and 1.5 ft. Westerly of a Steel OCS Witness Post. Monument is set 0.3 below the Ground.

Designation: 2G-25-70 Elev = 275.872
Described by OCS 2003 - Found 3¾" OCS Aluminum Benchmark Disk Stamped "2G-25-70", set in the Southeasterly Corner of a 4 ft by 6 ft Concrete Catch Basin. Monument is Located in the Northwesterly Corner of the Intersection of Yorba Linda Boulevard and Deerpark Drive, 75 ft Westerly of the Centerline of Deerpark and 46 ft Northerly of the Centerline of Yorba Linda. Monument is set Level with the Sidewalk.

Dist	COUNTY	ROUTE	POST MILES TOTAL PROJECT	SHEET No.	TOTAL SHEETS
12	Ora	57	16.2/18.6	448	960

Chien-Tai Yang 7/15/09
REGISTERED CIVIL ENGINEER DATE

12-14-09
PLANS APPROVAL DATE

REGISTERED PROFESSIONAL ENGINEER — Chien-Tai Yang — No. C 66394 — Exp. 6-30-10 — CIVIL — STATE OF CALIFORNIA

THE STATE OF CALIFORNIA OR ITS OFFICERS OR AGENTS SHALL NOT BE RESPONSIBLE FOR THE ACCURACY OR COMPLETENESS OF SCANNED COPIES OF THIS PLAN SHEET.

ORANGE COUNTY TRANSPORTATION AUTHORITY
550 S. MAIN STREET
ORANGE, CA 92863-1584

EARTH MECHANICS, INC.
17660 NEWHOPE STREET, SUITE E
FOUNTAIN VALLEY, CA 92708

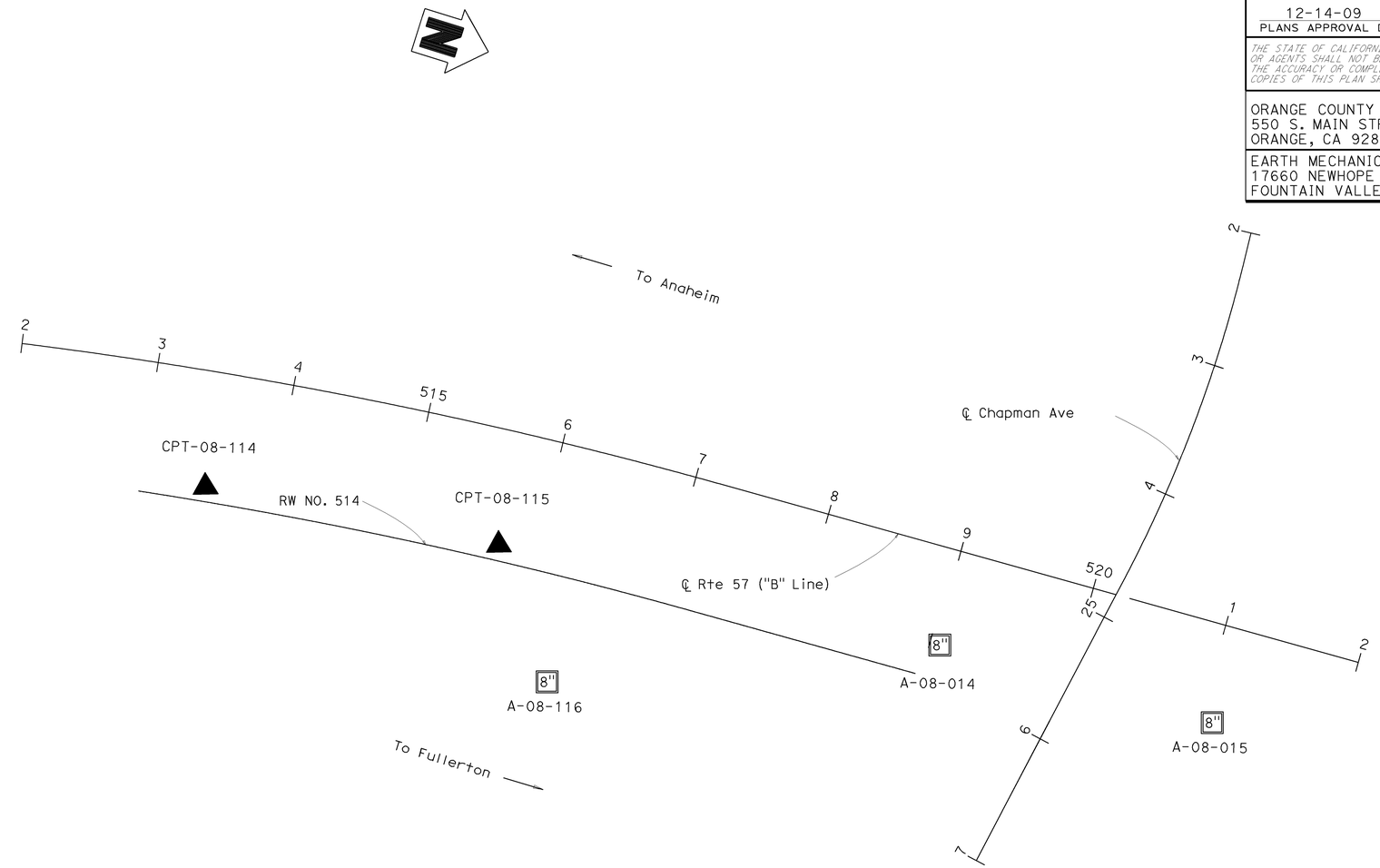

PLAN

1" = 50'

DESIGN OVERSIGHT	DRAWN BY: J.Fang	FIELD INVESTIGATION BY:	PREPARED FOR THE STATE OF CALIFORNIA DEPARTMENT OF TRANSPORTATION	C. Yang PROJECT ENGINEER	BRIDGE NO.
SIGN OFF DATE	CHECKED BY: L.Cheang	R.Jie			POST MILES 16.2/18.6

RETAINING WALL NO. 514
LOG OF TEST BORINGS NO. 1 R-36

DESIGN GENERAL PLAN SHEET (ENGLISH) (REV. 2/25/05)

ORIGINAL SCALE IN INCHES FOR REDUCED PLANS 0 1 2 3

CU 12
EA 0F0311

DISREGARD PRINTS BEARING EARLIER REVISION DATES →

REVISION DATES (PRELIMINARY STAGE ONLY): 4/30/09

SHEET OF

FILE => c0F031qe027.dgn

USERNAME => ttrene DATE PLOTTED => 17-DEC-2009 TIME PLOTTED => 07:02

Dist	COUNTY	ROUTE	POST MILES TOTAL PROJECT	SHEET No.	TOTAL SHEETS
12	Ora	57	16.2/18.6	449	960

REGISTERED CIVIL ENGINEER — DATE 7/15/09

12-14-09
PLANS APPROVAL DATE

REGISTERED PROFESSIONAL ENGINEER — Chien-Tai Yang — No. C 66394 — Exp. 6-30-10 — CIVIL — STATE OF CALIFORNIA

THE STATE OF CALIFORNIA OR ITS OFFICERS OR AGENTS SHALL NOT BE RESPONSIBLE FOR THE ACCURACY OR COMPLETENESS OF SCANNED COPIES OF THIS PLAN SHEET.

ORANGE COUNTY TRANSPORTATION AUTHORITY
550 S. MAIN STREET
ORANGE, CA 92863-1584

EARTH MECHANICS, INC.
17660 NEWHOPE STREET, SUITE E
FOUNTAIN VALLEY, CA 92708

FOR PLAN VIEW SEE "RETAINING WALL NO. 514, LOG OF TEST BORINGS NO. 1"

NOTES:

(1) This LOTB sheet was prepared in accordance with the Caltrans Soil and Rock Logging, Classification and Presentation Manual (June 2007)

(2) 2.4" samples were taken using a California Modified Sampler.

(3) An automatic trip hammer system consisting of a hammer weight of 140 lbs falling a distance of 30" was used to advance the drive sampler.

(4) Conversion factor from 2.4" Modified California Ring Sampler blowcounts to Standard Penetration Test (SPT) blowcounts is 0.5.

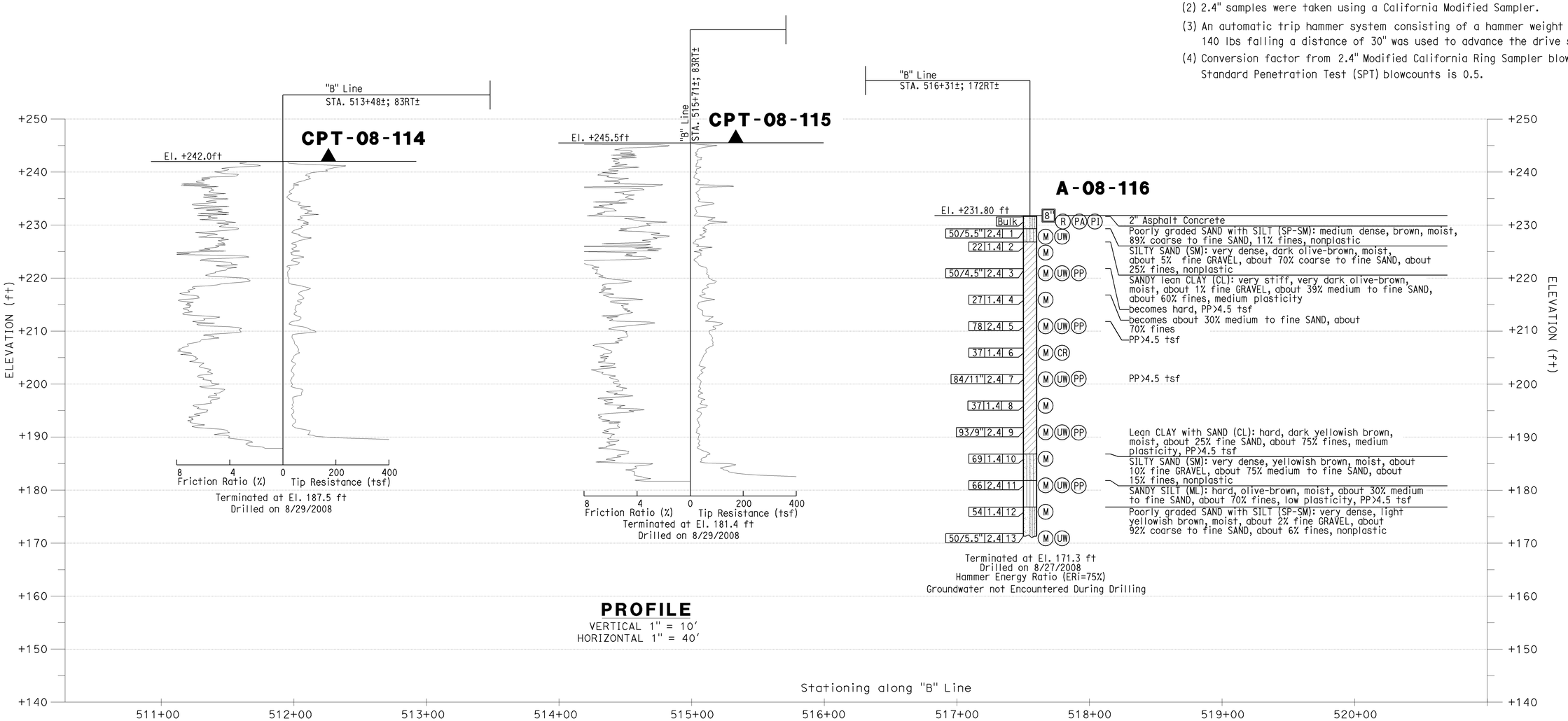

PROFILE
VERTICAL 1" = 10'
HORIZONTAL 1" = 40'

DESIGN OVERSIGHT SIGN OFF DATE	DRAWN BY: J.Fang CHECKED BY: L.Cheang	FIELD INVESTIGATION BY: R.Jie	PREPARED FOR THE STATE OF CALIFORNIA DEPARTMENT OF TRANSPORTATION	C.Yang PROJECT ENGINEER	BRIDGE NO. POST MILES 16.2/18.6	RETAINING WALL NO. 514 LOG OF TEST BORINGS NO. 2 — R-37

DESIGN GENERAL PLAN SHEET (ENGLISH) (REV. 2/25/05)

ORIGINAL SCALE IN INCHES FOR REDUCED PLANS 0 1 2 3

CU 12
EA 0F0311

DISREGARD PRINTS BEARING EARLIER REVISION DATES →

REVISION DATES (PRELIMINARY STAGE ONLY): 4/30/09

SHEET OF

FILE => c0F031qe028.dgn

DATE PLOTTED => 17-DEC-2009 TIME PLOTTED => 07:02
USERNAME => trrene

Dist	COUNTY	ROUTE	POST MILES TOTAL PROJECT	SHEET No.	TOTAL SHEETS
12	Ora	57	16.2/18.6	450	960

REGISTERED CIVIL ENGINEER — DATE 7/15/09

12-14-09
PLANS APPROVAL DATE

Registered Professional Engineer — Chien-Tai Yang — No. C 66394 — Exp. 6-30-10 — CIVIL — State of California

THE STATE OF CALIFORNIA OR ITS OFFICERS OR AGENTS SHALL NOT BE RESPONSIBLE FOR THE ACCURACY OR COMPLETENESS OF SCANNED COPIES OF THIS PLAN SHEET.

ORANGE COUNTY TRANSPORTATION AUTHORITY
550 S. MAIN STREET
ORANGE, CA 92863-1584

EARTH MECHANICS, INC.
17660 NEWHOPE STREET, SUITE E
FOUNTAIN VALLEY, CA 92708

FOR PLAN VIEW SEE "RETAINING WALL NO. 514, LOG OF TEST BORINGS NO. 1"

NOTES:

(1) This LOTB sheet was prepared in accordance with the Caltrans Soil and Rock Logging, Classification and Presentation Manual (June 2007)

(2) 2.4" samples were taken using a California Modified Sampler.

(3) An automatic trip hammer system consisting of a hammer weight of 140 lbs falling a distance of 30" was used to advance the drive sampler.

(4) Conversion factor from 2.4" Modified California Ring Sampler blowcounts to Standard Penetration Test (SPT) blowcounts is 0.5.

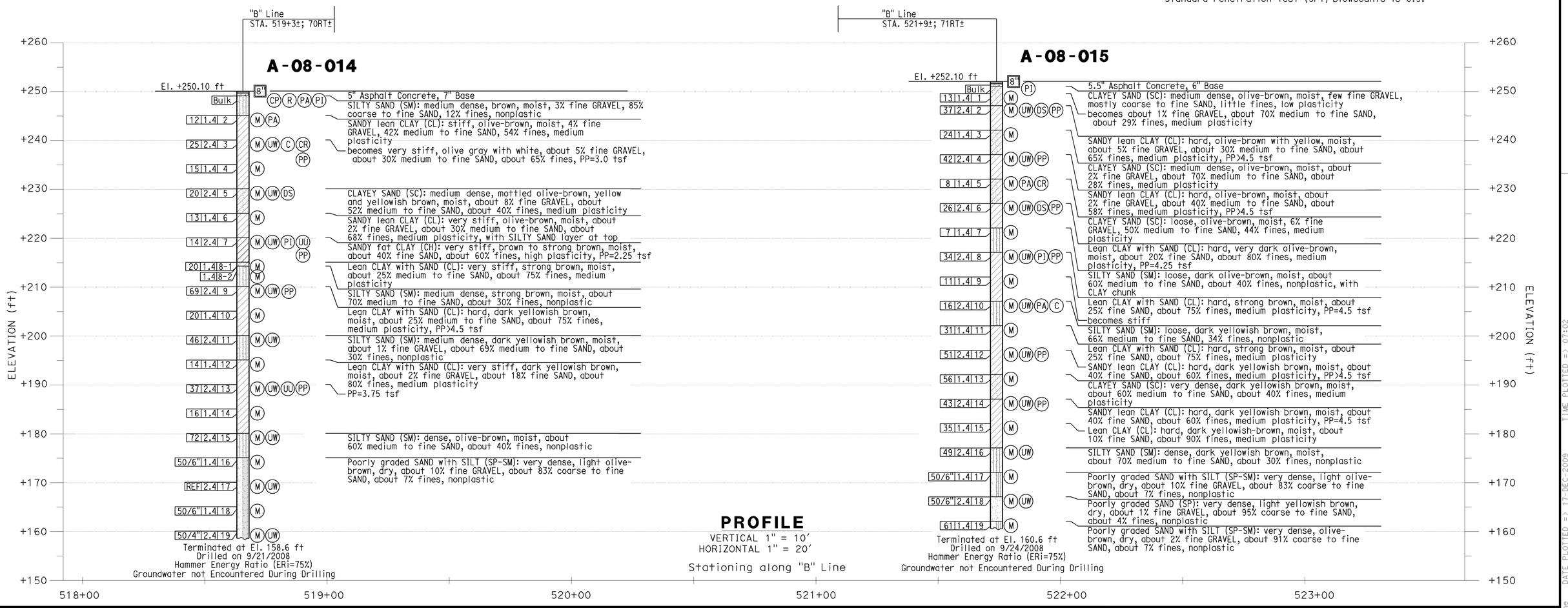

PROFILE
VERTICAL 1" = 10'
HORIZONTAL 1" = 20'
Stationing along "B" Line

DESIGN OVERSIGHT	DRAWN BY: J.Fang	FIELD INVESTIGATION BY:	PREPARED FOR THE STATE OF CALIFORNIA DEPARTMENT OF TRANSPORTATION	C. Yang	BRIDGE NO.
SIGN OFF DATE	CHECKED BY: L.Cheang	R.Jie		PROJECT ENGINEER	POST MILES 16.2/18.6

RETAINING WALL NO. 514
LOG OF TEST BORINGS NO. 3
R-38

DESIGN GENERAL PLAN SHEET (ENGLISH) (REV. 2/25/05)

ORIGINAL SCALE IN INCHES FOR REDUCED PLANS 0 1 2 3

CU 12
EA 0F0311

DISREGARD PRINTS BEARING EARLIER REVISION DATES →

REVISION DATES (PRELIMINARY STAGE ONLY) — 4/30/09

SHEET OF

FILE => c0F031qe029.dgn

DATE PLOTTED => 17-DEC-2009 TIME PLOTTED => 07:02
USERNAME => rrrene

Dist	COUNTY	ROUTE	POST MILES TOTAL PROJECT	SHEET No.	TOTAL SHEETS
12	Ora	57	16.2/18.6	451	960

REGISTERED CIVIL ENGINEER — 7/15/09 DATE

12-14-09
PLANS APPROVAL DATE

REGISTERED PROFESSIONAL ENGINEER — Chien-Tai Yang — No. C 66394 — Exp. 6-30-10 — CIVIL — STATE OF CALIFORNIA

THE STATE OF CALIFORNIA OR ITS OFFICERS OR AGENTS SHALL NOT BE RESPONSIBLE FOR THE ACCURACY OR COMPLETENESS OF SCANNED COPIES OF THIS PLAN SHEET.

ORANGE COUNTY TRANSPORTATION AUTHORITY
550 S. MAIN STREET
ORANGE, CA 92863-1584

EARTH MECHANICS, INC.
17660 NEWHOPE STREET, SUITE E
FOUNTAIN VALLEY, CA 92708

REFERENCE: CALTRANS SOIL & ROCK LOGGING, CLASSIFICATION, AND PRESENTATION MANUAL (JUNE 2007)

CEMENTATION

Description	Criteria
Weak	Crumbles or breaks with handling or little finger pressure.
Moderate	Crumbles or breaks with considerable finger pressure.
Strong	Will not crumble or break with finger pressure.

BOREHOLE IDENTIFICATION

Symbol	Hole Type	Description
Size	A	Auger Boring
Size	R P	Rotary drilled boring Rotary percussion boring (air)
Size	R	Rotary drilled diamond core
Size	HD HA	Hand driven (1-inch soil tube) Hand Auger
●	D	Dynamic Cone Penetration Boring
▲	CPT	Cone Penetration Test (ASTM D 5778-95)
⬚	O	Other

Note: Size in inches.

CONSISTENCY OF COHESIVE SOILS

Description	Unconfined Compressive Strength (tsf)	Pocket Penetrometer Measurement (tsf)	Torvane Measurement (tsf)	Field Approximation
Very Soft	< 0.25	< 0.25	< 0.12	Easily penetrated several inches by fist
Soft	0.25 to 0.50	0.25 to 0.50	0.12 to 0.25	Easily penetrated several inches by thumb
Medium Stiff	0.50 to 1.0	0.50 to 1.0	0.25 to 0.50	Penetrated several inches by thumb with moderate effort
Stiff	1 to 2	1 to 2	0.50 to 1.0	Readily indented by thumb but penetrated only with great effort
Very Stiff	2 to 4	2 to 4	1.0 to 2.0	Readily indented by thumbnail
Hard	> 4.0	> 4.0	> 2.0	Indented by thumbnail with difficulty

PLASTICITY OF FINE-GRAINED SOILS

Description	Criteria
Nonplastic	A 1/8-inch thread cannot be rolled at any water content.
Low	The thread can barely be rolled and the lump cannot be formed when drier than the plastic limit.
Medium	The thread is easy to roll and not much time is required to reach the plastic limit. The thread cannot be rerolled after reaching the plastic limit. The lump crumbles when drier than the plastic limit.
High	It takes considerable time rolling and kneading to reach the plastic limit. The thread can be rerolled several times after reaching the plastic limit. The lump can be formed without crumbling when drier than the plastic limit.

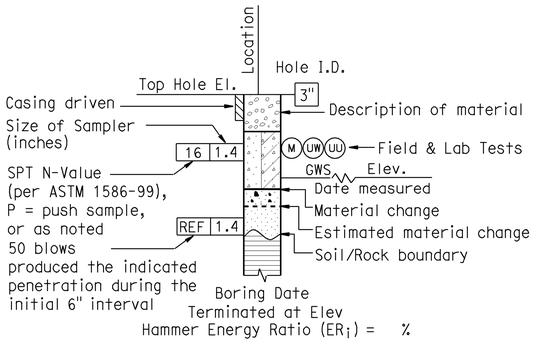

ROTARY BORING

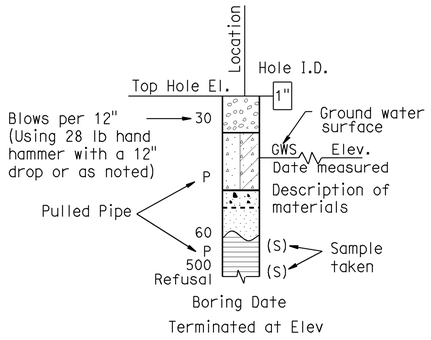

HAND BORING

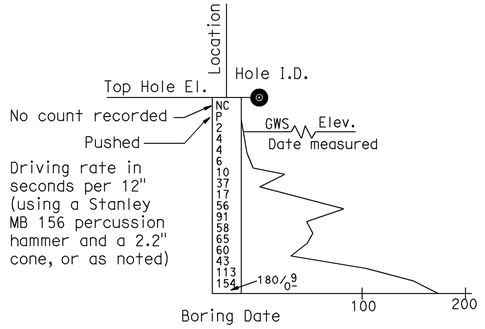

DYNAMIC CONE PENETRATION BORING

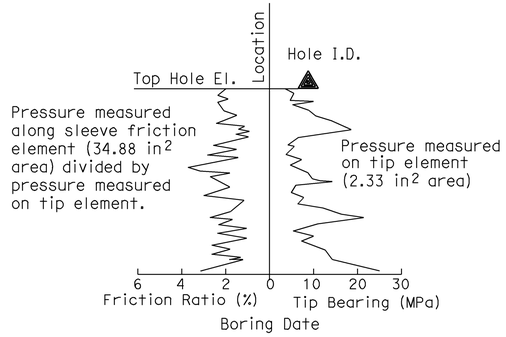

CONE PENETRATION TEST (CPT) SOUNDING

DESIGN OVERSIGHT SIGN OFF DATE	DRAWN BY: J.Fang CHECKED BY: L.Cheang	FIELD INVESTIGATION BY: R.Jie	PREPARED FOR THE STATE OF CALIFORNIA DEPARTMENT OF TRANSPORTATION	C. Yang PROJECT ENGINEER	BRIDGE NO. POST MILES 16.2/18.6	RETAINING WALL NO. 514 LOG OF TEST BORINGS NO. 4 — R-39
DESIGN GENERAL PLAN SHEET (ENGLISH) (REV. 2/25/05)	ORIGINAL SCALE IN INCHES FOR REDUCED PLANS 0 1 2 3			CU 12 EA 0F0311	DISREGARD PRINTS BEARING EARLIER REVISION DATES →	REVISION DATES (PRELIMINARY STAGE ONLY) — SHEET — OF

USERNAME => ttrone DATE PLOTTED => 17-DEC-2009 TIME PLOTTED => 07:02
FILE => c0F031qe030.dgn

REFERENCE: CALTRANS SOIL & ROCK LOGGING, CLASSIFICATION, AND PRESENTATION MANUAL (JUNE 2007)

GROUP SYMBOLS AND NAMES

Graphic/Symbol	Group Names	Graphic/Symbol	Group Names
GW	Well-graded GRAVEL Well-graded GRAVEL with SAND	CL	Lean CLAY Lean CLAY with SAND Lean CLAY with GRAVEL SANDY lean CLAY SANDY lean CLAY with GRAVEL GRAVELLY lean CLAY GRAVELLY lean CLAY with SAND
GP	Poorly graded GRAVEL Poorly graded GRAVEL with SAND		
GW-GM	Well-graded GRAVEL with SILT Well-graded GRAVEL with SILT and SAND	CL-ML	SILTY CLAY SILTY CLAY with SAND SILTY CLAY with GRAVEL SANDY SILTY CLAY SANDY SILTY CLAY with GRAVEL GRAVELLY SILTY CLAY GRAVELLY SILTY CLAY with SAND
GW-GC	Well-graded GRAVEL with CLAY (or SILTY CLAY) Well-graded GRAVEL with CLAY and SAND (or SILTY CLAY and SAND)		
GP-GM	Poorly graded GRAVEL with SILT Poorly graded GRAVEL with SILT and SAND	ML	SILT SILT with SAND SILT with GRAVEL SANDY SILT SANDY SILT with GRAVEL GRAVELLY SILT GRAVELLY SILT with SAND
GP-GC	Poorly graded GRAVEL with CLAY (or SILTY CLAY) Poorly graded GRAVEL with CLAY and SAND (or SILTY CLAY and SAND)		
GM	SILTY GRAVEL SILTY GRAVEL with SAND	OL	ORGANIC lean CLAY ORGANIC lean CLAY with SAND ORGANIC lean CLAY with GRAVEL SANDY ORGANIC lean CLAY SANDY ORGANIC lean CLAY with GRAVEL GRAVELLY ORGANIC lean CLAY GRAVELLY ORGANIC lean CLAY with SAND
GC	CLAYEY GRAVEL CLAYEY GRAVEL with SAND		
GC-GM	SILTY, CLAYEY GRAVEL SILTY, CLAYEY GRAVEL with SAND	OL	ORGANIC SILT ORGANIC SILT with SAND ORGANIC SILT with GRAVEL SANDY ORGANIC SILT SANDY ORGANIC SILT with GRAVEL GRAVELLY ORGANIC SILT GRAVELLY ORGANIC SILT with SAND
SW	Well-graded SAND Well-graded SAND with GRAVEL		
SP	Poorly graded SAND Poorly graded SAND with GRAVEL	CH	Fat CLAY Fat CLAY with SAND Fat CLAY with GRAVEL SANDY fat CLAY SANDY fat CLAY with GRAVEL GRAVELLY fat CLAY GRAVELLY fat CLAY with SAND
SW-SM	Well-graded SAND with SILT Well-graded SAND with SILT and GRAVEL		
SW-SC	Well-graded SAND with CLAY (or SILTY CLAY) Well-graded SAND with CLAY and GRAVEL (or SILTY CLAY and GRAVEL)	MH	Elastic SILT Elastic SILT with SAND Elastic SILT with GRAVEL SANDY elastic SILT SANDY elastic SILT with GRAVEL GRAVELLY elastic SILT GRAVELLY elastic SILT with SAND
SP-SM	Poorly graded SAND with SILT Poorly graded SAND with SILT and GRAVEL		
SP-SC	Poorly graded SAND with CLAY (or SILTY CLAY) Poorly graded SAND with CLAY and GRAVEL (or SILTY CLAY and GRAVEL)	OH	ORGANIC fat CLAY ORGANIC fat CLAY with SAND ORGANIC fat CLAY with GRAVEL SANDY ORGANIC fat CLAY SANDY ORGANIC fat CLAY with GRAVEL GRAVELLY ORGANIC fat CLAY GRAVELLY ORGANIC fat CLAY with SAND
SM	SILTY SAND SILTY SAND with GRAVEL		
SC	CLAYEY SAND CLAYEY SAND with GRAVEL	OH	ORGANIC elastic SILT ORGANIC elastic SILT with SAND ORGANIC elastic SILT with GRAVEL SANDY ORGANIC elastic SILT SANDY ORGANIC elastic SILT with GRAVEL GRAVELLY ORGANIC elastic SILT GRAVELLY ORGANIC elastic SILT with SAND
SC-SM	SILTY, CLAYEY SAND SILTY, CLAYEY SAND with GRAVEL		
PT	PEAT	OL/OH	ORGANIC SOIL ORGANIC SOIL with SAND ORGANIC SOIL with GRAVEL SANDY ORGANIC SOIL SANDY ORGANIC SOIL with GRAVEL GRAVELLY ORGANIC SOIL GRAVELLY ORGANIC SOIL with SAND
	COBBLES COBBLES and BOULDERS BOULDERS		

FIELD AND LABORATORY TESTING

- (C) Consolidation (ASTM D 2435)
- (CL) Collapse Potential (ASTM D 5333)
- (CP) Compaction Curve (CTM 216)
- (CR) Corrosivity Testing (CTM 643, CTM 422, CTM 417)
- (CU) Consolidated Undrained Triaxial (ASTM D 4767)
- (DS) Direct Shear (ASTM D 3080)
- (EI) Expansion Index (ASTM D 4829)
- (M) Moisture Content (ASTM D 2216)
- (OC) Organic Content-% (ASTM D 2974)
- (P) Permeability (CTM 220)
- (PA) Particle Size Analysis (ASTM D 422)
- (PI) Plasticity Index (AASHTO T 90) Liquid Limit (AASHTO T 89)
- (PL) Point Load Index (ASTM D 5731)
- (PM) Pressure Meter
- (PP) Pocket Penetrometer
- (R) R-Value (CTM 301)
- (SE) Sand Equivalent (CTM 217)
- (SG) Specific Gravity (AASHTO T 100)
- (SL) Shrinkage Limit (ASTM D 427)
- (SW) Swell Potential (ASTM D 4546)
- (TV) Pocket Torvane
- (UC) Unconfined Compression-Soil (ASTM D 2166) Unconfined Compression-Rock (ASTM D 2938)
- (UU) Unconsolidated Undrained Triaxial (ASTM D 2850)
- (UW) Unit Weight (ASTM D 4767)
- (VS) Vane Shear (AASHTO T 223)

Dist	COUNTY	ROUTE	POST MILES TOTAL PROJECT	SHEET No.	TOTAL SHEETS
12	Ora	57	16.2/18.6	452	960

REGISTERED CIVIL ENGINEER — 7/15/09 DATE

12-14-09
PLANS APPROVAL DATE

REGISTERED PROFESSIONAL ENGINEER — Chien-Tai Yang — No. C 66394 — Exp. 6-30-10 — CIVIL — STATE OF CALIFORNIA

THE STATE OF CALIFORNIA OR ITS OFFICERS OR AGENTS SHALL NOT BE RESPONSIBLE FOR THE ACCURACY OR COMPLETENESS OF SCANNED COPIES OF THIS PLAN SHEET.

ORANGE COUNTY TRANSPORTATION AUTHORITY
550 S. MAIN STREET
ORANGE, CA 92863-1584

EARTH MECHANICS, INC.
17660 NEWHOPE STREET, SUITE E
FOUNTAIN VALLEY, CA 92708

APPARENT DENSITY OF COHESIONLESS SOILS

Description	SPT N_{60} (Blows / 12 inches)
Very loose	0 - 4
Loose	5 - 10
Medium Dense	11 - 30
Dense	31 - 50
Very Dense	> 50

MOISTURE

Description	Criteria
Dry	Absence of moisture, dusty, dry to the touch
Moist	Damp but no visible water
Wet	Visible free water, usually soil is below water table

PERCENT OR PROPORTION OF SOILS

Description	Criteria
Trace	Particles are present but estimated to be less than 5%
Few	5 to 10%
Little	15 to 25%
Some	30 to 45%
Mostly	50 to 100%

PARTICLE SIZE

Description		Size
Boulder		> 12"
Cobble		3" to 12"
Gravel	Coarse	3/4" to 3"
	Fine	No. 4 to 3/4"
Sand	Coarse	No. 10 to No. 4
	Medium	No. 40 to No. 10
	Fine	No. 200 to No. 40

DESIGN OVERSIGHT

SIGN OFF DATE

DRAWN BY: J.Fang

CHECKED BY: L.Cheang

FIELD INVESTIGATION BY: R.Jie

PREPARED FOR THE STATE OF CALIFORNIA DEPARTMENT OF TRANSPORTATION

C. Yang
PROJECT ENGINEER

BRIDGE NO.

POST MILES 16.2/18.6

RETAINING WALL NO. 514
LOG OF TEST BORINGS NO. 5

R-40

DESIGN GENERAL PLAN SHEET (ENGLISH) (REV. 2/25/05)

ORIGINAL SCALE IN INCHES FOR REDUCED PLANS 0 1 2 3

CU 12
EA 0F0311

DISREGARD PRINTS BEARING EARLIER REVISION DATES →

REVISION DATES (PRELIMINARY STAGE ONLY)

SHEET OF

FILE => c0F031qe031.dgn

USERNAME => ttrent DATE PLOTTED => 17-DEC-2009 TIME PLOTTED => 07:02

FED. ROAD DIV. NO.	STATE	F. A. PROJECT NO.	SHEET NO.	TOTAL SHEETS
7	CALIF.			

DIST.	COUNTY	ROUTE	SECTION	SHEET NO.	TOTAL SHEETS
07	Ora	57	16.2/18.6	185	197

Date Approved August 28, 1967

AS BUILT PLANS
Contract No. 07-032124
Date Completed
Document No. 70000668

DIVISION OF ENGINEERING SERVICES - GEOTECHNICAL SERVICES					
As-Built Log of Test Borings sheet is considered an informational document only. As such, the State of California registration seal with signature, license number and registration certificate expiration date confirm that this is a true and accurate copy of the original document. This drawing is available and presented only for the convenience of any bidder, contractor or other interested party.					
DIST.	COUNTY	ROUTE	POST MILES - TOTAL PROJECT	Sheet No.	Total Sheets
12	Ora	57	16.2/18.6	453	960

Lino Cheang 06/29/09
REGISTERED CIVIL ENGINEER — DATE

REGISTERED PROFESSIONAL ENGINEER — LINO C. CHEANG — NO. GE 2345 — EXP. 9/30/09 — GEOTECHNICAL — STATE OF CALIFORNIA

RETAINING WALL NO. 514

LOG OF TEST BORINGS NO. 6 | **R-41**

NOTE: A COPY OF THIS LOG OF TEST BORINGS IS AVAILABLE AT OFFICE OF STRUCTURE MAINTENANCE AND INVESTIGATIONS, SACRAMENTO, CALIFORNIA

CU: 12 EA: 0F0311

BRIDGE No. X

Sheet of

To accompany plans dated 12-14-09

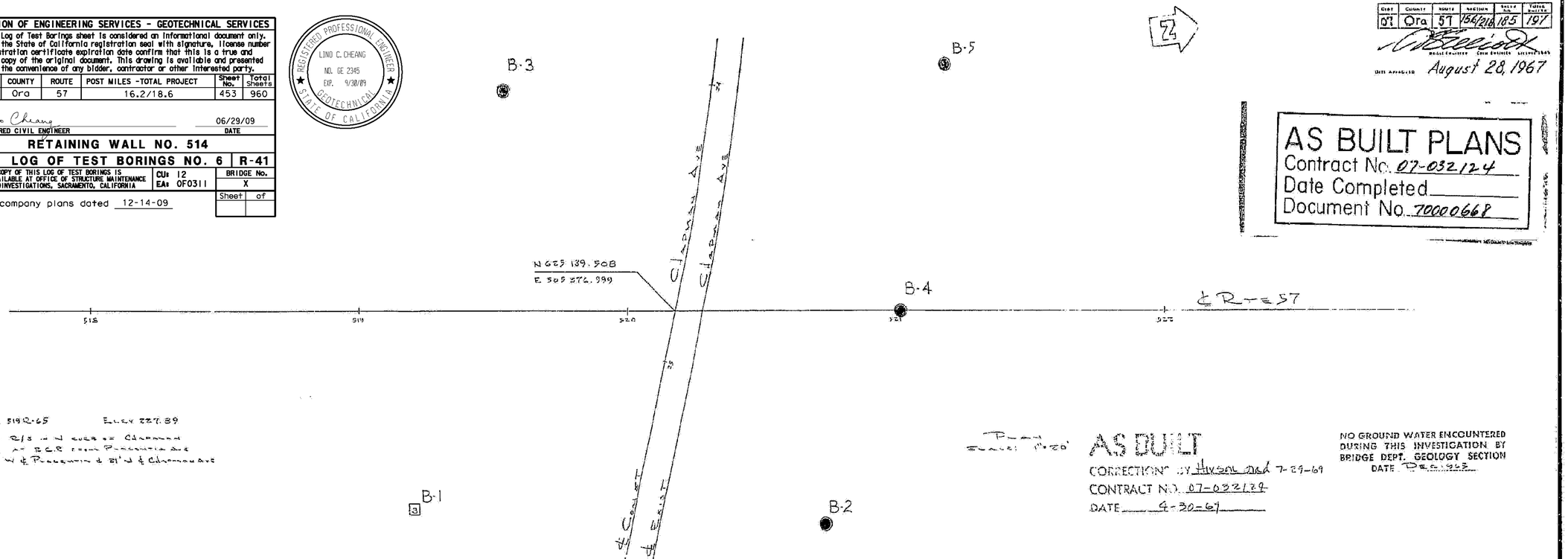

AS BUILT
CORRECTIONS BY Hansen Dale 7-29-69
CONTRACT NO. 07-032124
DATE 4-30-67

NO GROUND WATER ENCOUNTERED DURING THIS INVESTIGATION BY BRIDGE DEPT. GEOLOGY SECTION
DATE Dec. 1965

LEGEND OF EARTH MATERIALS

Gravel; Sand; Silt; Clay; Silty Clay or Clayey Silt; Peat and/or Organic Matter; Fill Material; Igneous Rock; Sedimentary Rock; Metamorphic Rock; Sandy Clay or Clayey Sand; Silty or Clayey Sand

CLASSIFICATION OF MATERIAL BASED ON STANDARD GRAIN SIZE LIMITS

Diagram showing the basis for estimates of grain size distribution used in determining the classification of soils. If gravel is present in appreciable amounts the term "gravelly" may be added to the class name, viz., "gravelly sand". The terms "fine", "coarse", "medium" and "fine" when used to describe sand, silt and gravel refer to the grain size limits.

NOTE: Classification of earth material as shown on this sheet is based upon field inspection and is not to be construed to imply mechanical analysis.

FIELD STUDY	R.W.C. Smith Initials
DRAWN	by Transcribed by
CHECKED	by Engineering Geologist

Approved Recommended by: Engineering Geologist

BRIDGE DEPARTMENT
ENGINEERING GEOLOGY SECTION

185

STATE OF CALIFORNIA
DEPARTMENT OF PUBLIC WORKS
DIVISION OF HIGHWAYS

SHEET 12 OF 12

CHAPMAN AVENUE UNDERCROSSING

LOG OF TEST BORINGS

SCALE As Noted | BRIDGE 55-456 | FILE | DRAWING 55456-12

FILENAME => c0F031qe032.tif

Clarence 07-08

Disregard prints bearing earlier numbers → PREL. DRAWING NO. PR- 5/61

c0F031qe032.tif

BENCHMARKS:

Vertical Datum NAVD 88

Designation: 1L-54-82 Elev = 153.171
Described by OCS 2002 - Found 3¾" OCS Aluminum Benchmark Disk Stamped "1L-54-82", set in the Top of a 6 in. by 6 in. Concrete Post. Monument is located along the Westerly Levee of the Santa Ana River, 0.25 Miles Northerly along Levee from the Centerline of Orangewood Avenue, 200 ft. Northeasterly of the Easterly Leg of the Anaheim Angels 200 ft. tall sign, 69 ft. Westerly of the Centerline of the Bike Trail and 1.5 ft. Westerly of a Steel OCS Witness Post. Monument is set 0.3 below the Ground.

Designation: 2G-25-70 Elev = 275.872
Described by OCS 2003 - Found 3¾" OCS Aluminum Benchmark Disk Stamped "2G-25-70", set in the Southeasterly Corner of a 4 ft by 6 ft Concrete Catch Basin. Monument is Located in the Northwesterly Corner of the Intersection of Yorba Linda Boulevard and Deerpark Drive, 75 ft Westerly of the Centerline of Deerpark and 46 ft Northerly of the Centerline of Yorba Linda. Monument is set Level with the Sidewalk.

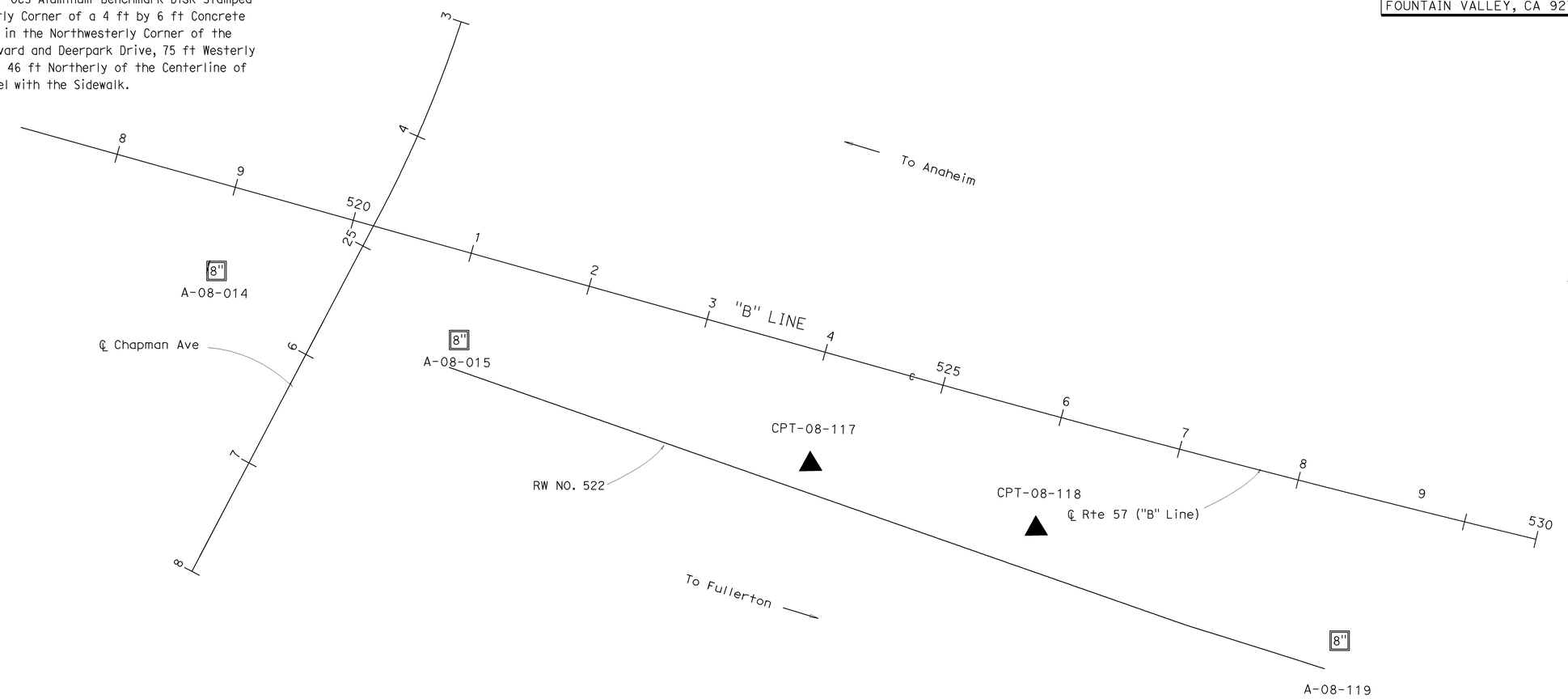

PLAN
1" = 50'

Dist	COUNTY	ROUTE	POST MILES TOTAL PROJECT	SHEET No.	TOTAL SHEETS
12	Ora	57	16.2/18.6	454	960

REGISTERED CIVIL ENGINEER — DATE 7/15/09

Chien-Tai Yang, No. C 66394, Exp. 6-30-10, CIVIL, REGISTERED PROFESSIONAL ENGINEER, STATE OF CALIFORNIA

12-14-09
PLANS APPROVAL DATE

THE STATE OF CALIFORNIA OR ITS OFFICERS OR AGENTS SHALL NOT BE RESPONSIBLE FOR THE ACCURACY OR COMPLETENESS OF SCANNED COPIES OF THIS PLAN SHEET.

ORANGE COUNTY TRANSPORTATION AUTHORITY
550 S. MAIN STREET
ORANGE, CA 92863-1584

EARTH MECHANICS, INC.
17660 NEWHOPE STREET, SUITE E
FOUNTAIN VALLEY, CA 92708

DESIGN OVERSIGHT
SIGN OFF DATE

DRAWN BY: J.Fang
CHECKED BY: L.Cheang

FIELD INVESTIGATION BY:
R.Jie

PREPARED FOR THE STATE OF CALIFORNIA DEPARTMENT OF TRANSPORTATION

C .Yang
PROJECT ENGINEER

BRIDGE NO.
POST MILES 16.2/18.6

RETAINING WALL NO. 522
LOG OF TEST BORINGS NO. 1 — R-42

DESIGN GENERAL PLAN SHEET (ENGLISH) (REV. 2/25/05)

ORIGINAL SCALE IN INCHES FOR REDUCED PLANS 0 1 2 3

CU 12
EA 0F0311

DISREGARD PRINTS BEARING EARLIER REVISION DATES →

REVISION DATES (PRELIMINARY STAGE ONLY): 4/30/09

SHEET OF

FILE => c0F031qe033.dgn

USERNAME = frrene DATE PLOTTED => 17-DEC-2009 TIME PLOTTED => 07:02

Dist	COUNTY	ROUTE	POST MILES TOTAL PROJECT	SHEET No.	TOTAL SHEETS
12	Ora	57	16.2/18.6	455	960

REGISTERED CIVIL ENGINEER — 7/15/09 DATE

12-14-09
PLANS APPROVAL DATE

Registered Professional Engineer — Chien-Tai Yang — No. C 66394 — Exp. 6-30-10 — CIVIL — State of California

THE STATE OF CALIFORNIA OR ITS OFFICERS OR AGENTS SHALL NOT BE RESPONSIBLE FOR THE ACCURACY OR COMPLETENESS OF SCANNED COPIES OF THIS PLAN SHEET.

ORANGE COUNTY TRANSPORTATION AUTHORITY
550 S. MAIN STREET
ORANGE, CA 92863-1584

EARTH MECHANICS, INC.
17660 NEWHOPE STREET, SUITE E
FOUNTAIN VALLEY, CA 92708

FOR PLAN VIEW SEE "RETAINING WALL NO. 522, LOG OF TEST BORINGS NO. 1"

NOTES:

(1) This LOTB sheet was prepared in accordance with the Caltrans Soil and Rock Logging, Classification and Presentation Manual (June 2007)

(2) 2.4" samples were taken using a California Modified Sampler.

(3) An automatic trip hammer system consisting of a hammer weight of 140 lbs falling a distance of 30" was used to advance the drive sampler.

(4) Conversion factor from 2.4" Modified California Ring Sampler blowcounts to Standard Penetration Test (SPT) blowcounts is 0.5.

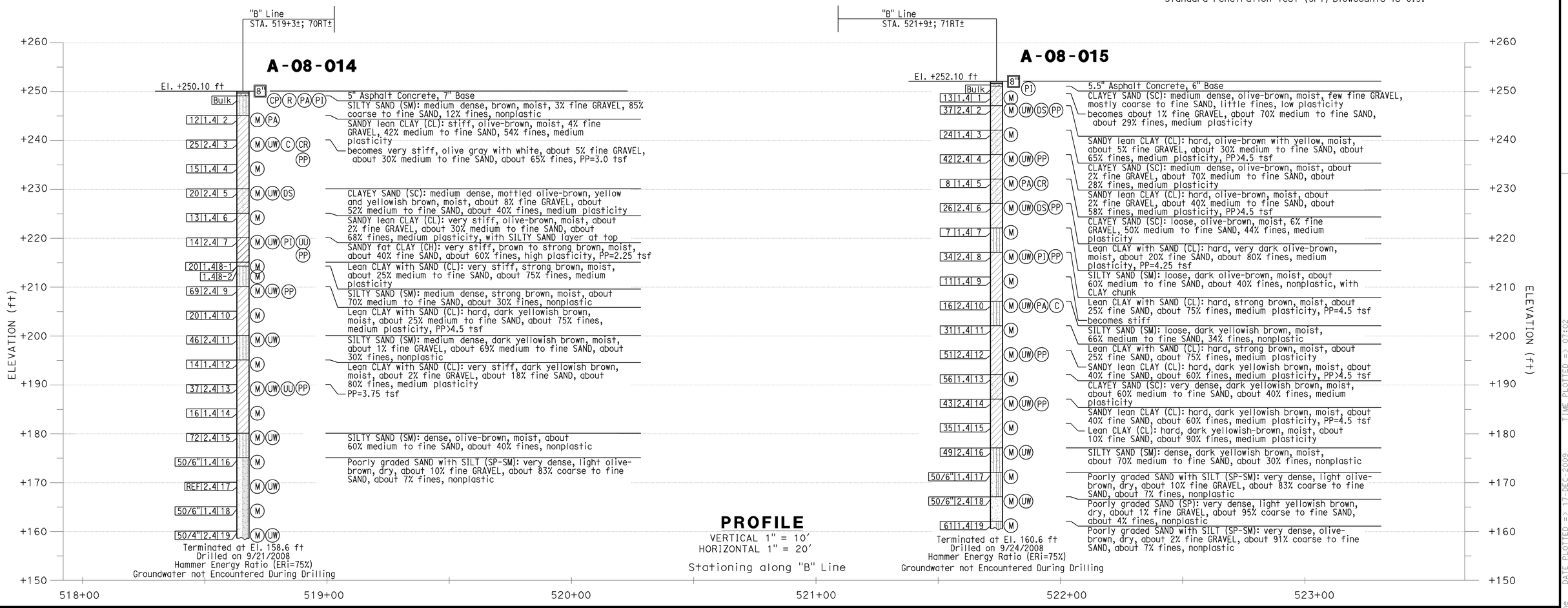

PROFILE
VERTICAL 1" = 10'
HORIZONTAL 1" = 20'
Stationing along "B" Line

DESIGN OVERSIGHT	DRAWN BY: J.Fang	FIELD INVESTIGATION BY:	PREPARED FOR THE STATE OF CALIFORNIA DEPARTMENT OF TRANSPORTATION	C. Yang PROJECT ENGINEER	BRIDGE NO.
SIGN OFF DATE	CHECKED BY: L.Cheang	R.Jie			POST MILES 16.2/18.6

RETAINING WALL NO. 522
LOG OF TEST BORINGS NO. 2
R-43

DESIGN GENERAL PLAN SHEET (ENGLISH) (REV. 2/25/05)

ORIGINAL SCALE IN INCHES FOR REDUCED PLANS 0 1 2 3

CU 12
EA 0F0311

DISREGARD PRINTS BEARING EARLIER REVISION DATES →

REVISION DATES (PRELIMINARY STAGE ONLY) — 4/30/09

SHEET OF

FILE => c0F031qe034.dgn

DATE PLOTTED => 17-DEC-2009 TIME PLOTTED => 07:02
USERNAME => rtrrene

Dist	COUNTY	ROUTE	POST MILES TOTAL PROJECT	SHEET No.	TOTAL SHEETS
12	Ora	57	16.2/18.6	456	960

REGISTERED CIVIL ENGINEER — DATE 7/15/09

12-14-09
PLANS APPROVAL DATE

REGISTERED PROFESSIONAL ENGINEER — Chien-Tai Yang — No. C 66394 — Exp. 6-30-10 — CIVIL — STATE OF CALIFORNIA

THE STATE OF CALIFORNIA OR ITS OFFICERS OR AGENTS SHALL NOT BE RESPONSIBLE FOR THE ACCURACY OR COMPLETENESS OF SCANNED COPIES OF THIS PLAN SHEET.

ORANGE COUNTY TRANSPORTATION AUTHORITY
550 S. MAIN STREET
ORANGE, CA 92863-1584

EARTH MECHANICS, INC.
17660 NEWHOPE STREET, SUITE E
FOUNTAIN VALLEY, CA 92708

FOR PLAN VIEW SEE "RETAINING WALL NO. 522, LOG OF TEST BORINGS NO. 1"

NOTES:

(1) This LOTB sheet was prepared in accordance with the Caltrans Soil and Rock Logging, Classification and Presentation Manual (June 2007)
(2) 2.4" samples were taken using a California Modified Sampler.
(3) An automatic trip hammer system consisting of a hammer weight of 140 lbs falling a distance of 30" was used to advance the drive sampler.
(4) Conversion factor from 2.4" Modified California Ring Sampler blowcounts to Standard Penetration Test (SPT) blowcounts is 0.5.

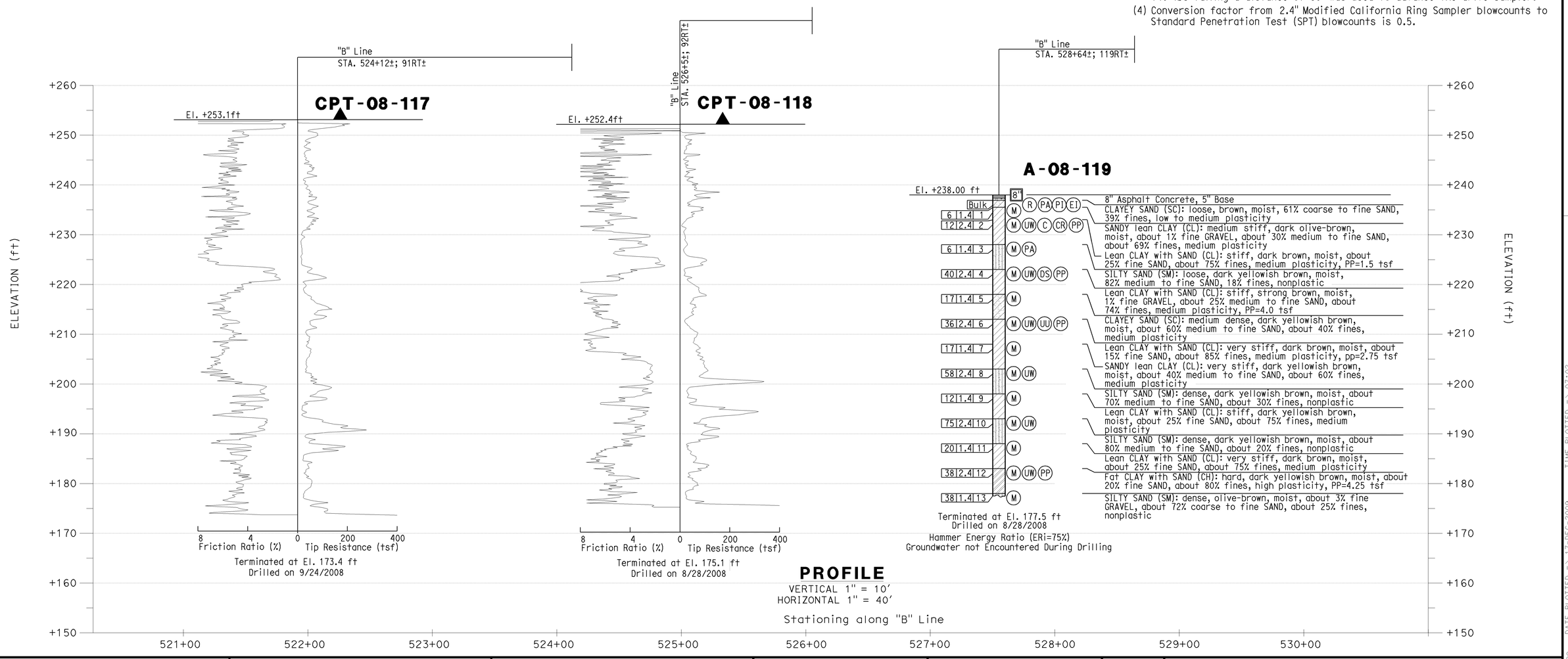

PROFILE

VERTICAL 1" = 10'
HORIZONTAL 1" = 40'

DESIGN OVERSIGHT	DRAWN BY: J.Fang	FIELD INVESTIGATION BY:	PREPARED FOR THE STATE OF CALIFORNIA DEPARTMENT OF TRANSPORTATION	C.Yang PROJECT ENGINEER	BRIDGE NO.
SIGN OFF DATE	CHECKED BY: L.Cheang	R.Jie			POST MILES 16.2/18.6

RETAINING WALL NO. 522

LOG OF TEST BORINGS NO. 3 — R-44

DESIGN GENERAL PLAN SHEET (ENGLISH) (REV. 2/25/05)

ORIGINAL SCALE IN INCHES FOR REDUCED PLANS 0 1 2 3

CU 12
EA 0F0311

DISREGARD PRINTS BEARING EARLIER REVISION DATES →

REVISION DATES (PRELIMINARY STAGE ONLY): 4/30/09

SHEET OF

FILE => c0F031qe035.dgn

USERNAME => tfrene DATE PLOTTED => 17-DEC-2009 TIME PLOTTED => 07:02

REFERENCE: CALTRANS SOIL & ROCK LOGGING, CLASSIFICATION, AND PRESENTATION MANUAL (JUNE 2007)

Dist	COUNTY	ROUTE	POST MILES TOTAL PROJECT	SHEET No.	TOTAL SHEETS
12	Ora	57	16.2/18.6	457	960

REGISTERED CIVIL ENGINEER — 7/15/09 DATE

12-14-09
PLANS APPROVAL DATE

REGISTERED PROFESSIONAL ENGINEER — Chien-Tai Yang — No. C 66394 — Exp. 6-30-10 — CIVIL — STATE OF CALIFORNIA

THE STATE OF CALIFORNIA OR ITS OFFICERS OR AGENTS SHALL NOT BE RESPONSIBLE FOR THE ACCURACY OR COMPLETENESS OF SCANNED COPIES OF THIS PLAN SHEET.

ORANGE COUNTY TRANSPORTATION AUTHORITY
550 S. MAIN STREET
ORANGE, CA 92863-1584

EARTH MECHANICS, INC.
17660 NEWHOPE STREET, SUITE E
FOUNTAIN VALLEY, CA 92708

CEMENTATION

Description	Criteria
Weak	Crumbles or breaks with handling or little finger pressure.
Moderate	Crumbles or breaks with considerable finger pressure.
Strong	Will not crumble or break with finger pressure.

BOREHOLE IDENTIFICATION

Symbol	Hole Type	Description
Size	A	Auger Boring
Size	R P	Rotary drilled boring Rotary percussion boring (air)
Size	R	Rotary drilled diamond core
Size	HD HA	Hand driven (1-inch soil tube) Hand Auger
●	D	Dynamic Cone Penetration Boring
▲	CPT	Cone Penetration Test (ASTM D 5778-95)
⬚	O	Other

Note: Size in inches.

CONSISTENCY OF COHESIVE SOILS

Description	Unconfined Compressive Strength (tsf)	Pocket Penetrometer Measurement (tsf)	Torvane Measurement (tsf)	Field Approximation
Very Soft	< 0.25	< 0.25	< 0.12	Easily penetrated several inches by fist
Soft	0.25 to 0.50	0.25 to 0.50	0.12 to 0.25	Easily penetrated several inches by thumb
Medium Stiff	0.50 to 1.0	0.50 to 1.0	0.25 to 0.50	Penetrated several inches by thumb with moderate effort
Stiff	1 to 2	1 to 2	0.50 to 1.0	Readily indented by thumb but penetrated only with great effort
Very Stiff	2 to 4	2 to 4	1.0 to 2.0	Readily indented by thumbnail
Hard	> 4.0	> 4.0	> 2.0	Indented by thumbnail with difficulty

PLASTICITY OF FINE-GRAINED SOILS

Description	Criteria
Nonplastic	A 1/8-inch thread cannot be rolled at any water content.
Low	The thread can barely be rolled and the lump cannot be formed when drier than the plastic limit.
Medium	The thread is easy to roll and not much time is required to reach the plastic limit. The thread cannot be rerolled after reaching the plastic limit. The lump crumbles when drier than the plastic limit.
High	It takes considerable time rolling and kneading to reach the plastic limit. The thread can be rerolled several times after reaching the plastic limit. The lump can be formed without crumbling when drier than the plastic limit.

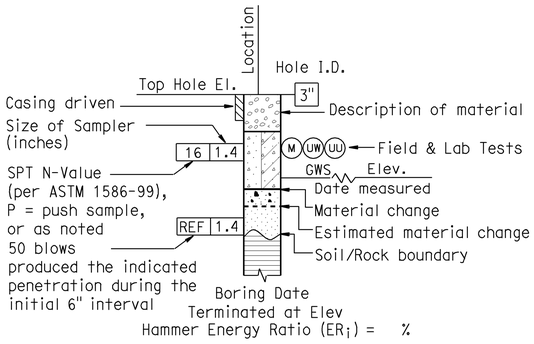

ROTARY BORING

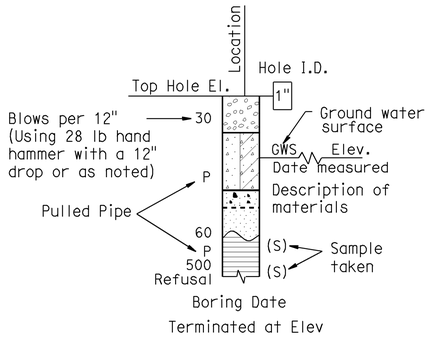

HAND BORING

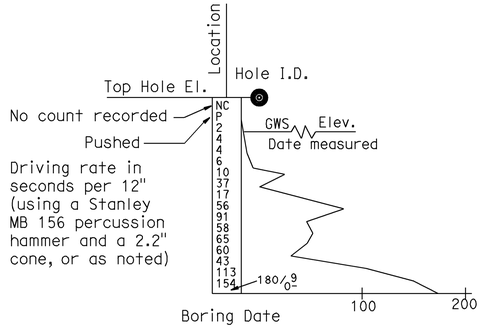

DYNAMIC CONE PENETRATION BORING

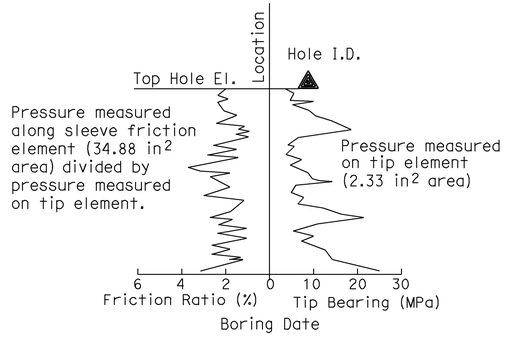

CONE PENETRATION TEST (CPT) SOUNDING

DESIGN OVERSIGHT SIGN OFF DATE	DRAWN BY: J.Fang CHECKED BY: L.Cheang	FIELD INVESTIGATION BY: R.Jie	PREPARED FOR THE STATE OF CALIFORNIA DEPARTMENT OF TRANSPORTATION	C. Yang PROJECT ENGINEER	BRIDGE NO. POST MILES 16.2/18.6	RETAINING WALL NO. 522 LOG OF TEST BORINGS NO. 4 — R-45
DESIGN GENERAL PLAN SHEET (ENGLISH) (REV. 2/25/05)	ORIGINAL SCALE IN INCHES FOR REDUCED PLANS 0 1 2 3			CU 12 EA 0F0311	DISREGARD PRINTS BEARING EARLIER REVISION DATES →	REVISION DATES (PRELIMINARY STAGE ONLY) — SHEET OF

FILE => c0F031qe036.dgn

USERNAME => ttrone DATE PLOTTED => 17-DEC-2009 TIME PLOTTED => 07:02

REFERENCE: CALTRANS SOIL & ROCK LOGGING, CLASSIFICATION, AND PRESENTATION MANUAL (JUNE 2007)

GROUP SYMBOLS AND NAMES

Graphic/Symbol	Group Names	Graphic/Symbol	Group Names
GW	Well-graded GRAVEL Well-graded GRAVEL with SAND	CL	Lean CLAY Lean CLAY with SAND Lean CLAY with GRAVEL SANDY lean CLAY SANDY lean CLAY with GRAVEL GRAVELLY lean CLAY GRAVELLY lean CLAY with SAND
GP	Poorly graded GRAVEL Poorly graded GRAVEL with SAND		
GW-GM	Well-graded GRAVEL with SILT Well-graded GRAVEL with SILT and SAND	CL-ML	SILTY CLAY SILTY CLAY with SAND SILTY CLAY with GRAVEL SANDY SILTY CLAY SANDY SILTY CLAY with GRAVEL GRAVELLY SILTY CLAY GRAVELLY SILTY CLAY with SAND
GW-GC	Well-graded GRAVEL with CLAY (or SILTY CLAY) Well-graded GRAVEL with CLAY and SAND (or SILTY CLAY and SAND)		
GP-GM	Poorly graded GRAVEL with SILT Poorly graded GRAVEL with SILT and SAND	ML	SILT SILT with SAND SILT with GRAVEL SANDY SILT SANDY SILT with GRAVEL GRAVELLY SILT GRAVELLY SILT with SAND
GP-GC	Poorly graded GRAVEL with CLAY (or SILTY CLAY) Poorly graded GRAVEL with CLAY and SAND (or SILTY CLAY and SAND)		
GM	SILTY GRAVEL SILTY GRAVEL with SAND	OL	ORGANIC lean CLAY ORGANIC lean CLAY with SAND ORGANIC lean CLAY with GRAVEL SANDY ORGANIC lean CLAY SANDY ORGANIC lean CLAY with GRAVEL GRAVELLY ORGANIC lean CLAY GRAVELLY ORGANIC lean CLAY with SAND
GC	CLAYEY GRAVEL CLAYEY GRAVEL with SAND		
GC-GM	SILTY, CLAYEY GRAVEL SILTY, CLAYEY GRAVEL with SAND	OL	ORGANIC SILT ORGANIC SILT with SAND ORGANIC SILT with GRAVEL SANDY ORGANIC SILT SANDY ORGANIC SILT with GRAVEL GRAVELLY ORGANIC SILT GRAVELLY ORGANIC SILT with SAND
SW	Well-graded SAND Well-graded SAND with GRAVEL		
SP	Poorly graded SAND Poorly graded SAND with GRAVEL	CH	Fat CLAY Fat CLAY with SAND Fat CLAY with GRAVEL SANDY fat CLAY SANDY fat CLAY with GRAVEL GRAVELLY fat CLAY GRAVELLY fat CLAY with SAND
SW-SM	Well-graded SAND with SILT Well-graded SAND with SILT and GRAVEL		
SW-SC	Well-graded SAND with CLAY (or SILTY CLAY) Well-graded SAND with CLAY and GRAVEL (or SILTY CLAY and GRAVEL)	MH	Elastic SILT Elastic SILT with SAND Elastic SILT with GRAVEL SANDY elastic SILT SANDY elastic SILT with GRAVEL GRAVELLY elastic SILT GRAVELLY elastic SILT with SAND
SP-SM	Poorly graded SAND with SILT Poorly graded SAND with SILT and GRAVEL		
SP-SC	Poorly graded SAND with CLAY (or SILTY CLAY) Poorly graded SAND with CLAY and GRAVEL (or SILTY CLAY and GRAVEL)	OH	ORGANIC fat CLAY ORGANIC fat CLAY with SAND ORGANIC fat CLAY with GRAVEL SANDY ORGANIC fat CLAY SANDY ORGANIC fat CLAY with GRAVEL GRAVELLY ORGANIC fat CLAY GRAVELLY ORGANIC fat CLAY with SAND
SM	SILTY SAND SILTY SAND with GRAVEL		
SC	CLAYEY SAND CLAYEY SAND with GRAVEL	OH	ORGANIC elastic SILT ORGANIC elastic SILT with SAND ORGANIC elastic SILT with GRAVEL SANDY ORGANIC elastic SILT SANDY ORGANIC elastic SILT with GRAVEL GRAVELLY ORGANIC elastic SILT GRAVELLY ORGANIC elastic SILT with SAND
SC-SM	SILTY, CLAYEY SAND SILTY, CLAYEY SAND with GRAVEL		
PT	PEAT	OL/OH	ORGANIC SOIL ORGANIC SOIL with SAND ORGANIC SOIL with GRAVEL SANDY ORGANIC SOIL SANDY ORGANIC SOIL with GRAVEL GRAVELLY ORGANIC SOIL GRAVELLY ORGANIC SOIL with SAND
	COBBLES COBBLES and BOULDERS BOULDERS		

FIELD AND LABORATORY TESTING

- (C) Consolidation (ASTM D 2435)
- (CL) Collapse Potential (ASTM D 5333)
- (CP) Compaction Curve (CTM 216)
- (CR) Corrosivity Testing (CTM 643, CTM 422, CTM 417)
- (CU) Consolidated Undrained Triaxial (ASTM D 4767)
- (DS) Direct Shear (ASTM D 3080)
- (EI) Expansion Index (ASTM D 4829)
- (M) Moisture Content (ASTM D 2216)
- (OC) Organic Content-% (ASTM D 2974)
- (P) Permeability (CTM 220)
- (PA) Particle Size Analysis (ASTM D 422)
- (PI) Plasticity Index (AASHTO T 90) Liquid Limit (AASHTO T 89)
- (PL) Point Load Index (ASTM D 5731)
- (PM) Pressure Meter
- (PP) Pocket Penetrometer
- (R) R-Value (CTM 301)
- (SE) Sand Equivalent (CTM 217)
- (SG) Specific Gravity (AASHTO T 100)
- (SL) Shrinkage Limit (ASTM D 427)
- (SW) Swell Potential (ASTM D 4546)
- (TV) Pocket Torvane
- (UC) Unconfined Compression-Soil (ASTM D 2166); Unconfined Compression-Rock (ASTM D 2938)
- (UU) Unconsolidated Undrained Triaxial (ASTM D 2850)
- (UW) Unit Weight (ASTM D 4767)
- (VS) Vane Shear (AASHTO T 223)

Dist	COUNTY	ROUTE	POST MILES TOTAL PROJECT	SHEET No.	TOTAL SHEETS
12	Ora	57	16.2/18.6	458	960

REGISTERED CIVIL ENGINEER — 7/15/09 DATE

12-14-09
PLANS APPROVAL DATE

REGISTERED PROFESSIONAL ENGINEER — Chien-Tai Yang — No. C 66394 — Exp. 6-30-10 — CIVIL — STATE OF CALIFORNIA

THE STATE OF CALIFORNIA OR ITS OFFICERS OR AGENTS SHALL NOT BE RESPONSIBLE FOR THE ACCURACY OR COMPLETENESS OF SCANNED COPIES OF THIS PLAN SHEET.

ORANGE COUNTY TRANSPORTATION AUTHORITY
550 S. MAIN STREET
ORANGE, CA 92863-1584

EARTH MECHANICS, INC.
17660 NEWHOPE STREET, SUITE E
FOUNTAIN VALLEY, CA 92708

APPARENT DENSITY OF COHESIONLESS SOILS

Description	SPT N_{60} (Blows / 12 inches)
Very loose	0 - 4
Loose	5 - 10
Medium Dense	11 - 30
Dense	31 - 50
Very Dense	> 50

MOISTURE

Description	Criteria
Dry	Absence of moisture, dusty, dry to the touch
Moist	Damp but no visible water
Wet	Visible free water, usually soil is below water table

PERCENT OR PROPORTION OF SOILS

Description	Criteria
Trace	Particles are present but estimated to be less than 5%
Few	5 to 10%
Little	15 to 25%
Some	30 to 45%
Mostly	50 to 100%

PARTICLE SIZE

Description		Size
Boulder		> 12"
Cobble		3" to 12"
Gravel	Coarse	3/4" to 3"
	Fine	No. 4 to 3/4"
Sand	Coarse	No. 10 to No. 4
	Medium	No. 40 to No. 10
	Fine	No. 200 to No. 40

DESIGN OVERSIGHT
SIGN OFF DATE

DRAWN BY: J.Fang
CHECKED BY: L.Cheang

FIELD INVESTIGATION BY: R.Jie

PREPARED FOR THE STATE OF CALIFORNIA DEPARTMENT OF TRANSPORTATION

C. Yang
PROJECT ENGINEER

BRIDGE NO.
POST MILES 16.2/18.6

RETAINING WALL NO. 522
LOG OF TEST BORINGS NO. 5
R-46

DESIGN GENERAL PLAN SHEET (ENGLISH) (REV. 2/25/05)

ORIGINAL SCALE IN INCHES FOR REDUCED PLANS 0 1 2 3

CU 12
EA 0F0311

DISREGARD PRINTS BEARING EARLIER REVISION DATES →

REVISION DATES (PRELIMINARY STAGE ONLY)

SHEET OF

FILE => c0F031qe037.dgn

USERNAME => ntrene DATE PLOTTED => 17-DEC-2009 TIME PLOTTED => 07:03

FED. ROAD DIV. NO.	STATE	F. A. PROJECT NO.	SHEET NO.	TOTAL SHEETS
7	CALIF.			

DIST.	COUNTY	ROUTE	SECTION	SHEET NO.	TOTAL SHEETS
07	Ora	57	156/218	185	197

August 28, 1967

DIVISION OF ENGINEERING SERVICES - GEOTECHNICAL SERVICES

As-Built Log of Test Borings sheet is considered an informational document only. As such, the State of California registration seal with signature, license number and registration certificate expiration date confirm that this is a true and accurate copy of the original document. This drawing is available and presented only for the convenience of any bidder, contractor or other interested party.

DIST.	COUNTY	ROUTE	POST MILES - TOTAL PROJECT	Sheet No.	Total Sheets
12	Ora	57	16.2/18.6	459	960

Lino Cheang — 06/29/09
REGISTERED CIVIL ENGINEER — DATE

RETAINING WALL NO. 522

LOG OF TEST BORINGS NO. 6 — R-47

NOTE: A COPY OF THIS LOG OF TEST BORINGS IS AVAILABLE AT OFFICE OF STRUCTURE MAINTENANCE AND INVESTIGATIONS, SACRAMENTO, CALIFORNIA

CU: 12
EA: 0F0311

BRIDGE No. X

Sheet of

To accompany plans dated 12-14-09

REGISTERED PROFESSIONAL ENGINEER — LINO C. CHEANG — NO. GE 2345 — EXP. 9/30/09 — GEOTECHNICAL — STATE OF CALIFORNIA

AS BUILT PLANS
Contract No. 07-032124
Date Completed
Document No. 70000668

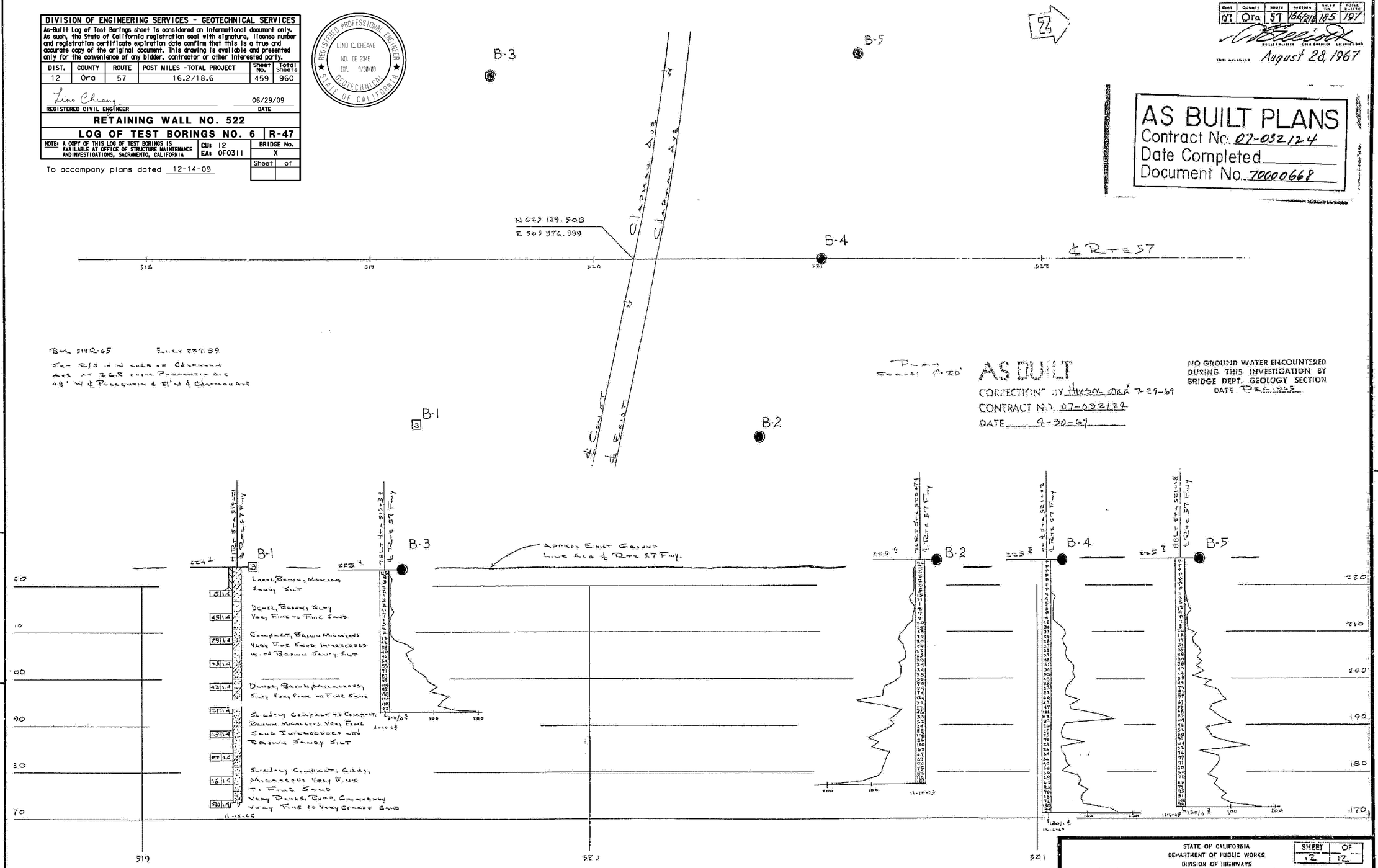

AS BUILT
CORRECTIONS BY Hixson and 7-29-69
CONTRACT NO. 07-032124
DATE 4-30-69

NO GROUND WATER ENCOUNTERED DURING THIS INVESTIGATION BY BRIDGE DEPT. GEOLOGY SECTION
DATE Dec. 1965

LEGEND OF BORING CODES

- Penetrometer
- 2½" Cone Penetrometer
- Sampler Boring (Dry)
- Rotary Boring (Wet)
- Auger Boring (Dry)
- Jet Boring
- Core Boring
- Test Pit

LEGEND OF EARTH MATERIALS

- Gravel
- Sand
- Silt
- Clay
- Sandy Clay or Clayey Sand
- Sandy Silt or Silty Sand
- Silty Clay or Clayey Silt
- Peat and/or Organic Matter
- Fill Material
- Igneous Rock
- Sedimentary Rock
- Metamorphic Rock

CLASSIFICATION OF MATERIAL BASED ON STANDARD GRADE SIZE LIMITS

NOTE: Classification of earth material as shown on this sheet is based upon field inspection and is not to be construed to imply mechanical analysis.

FIELD STUDY — DRAWN — CHECKED

BRIDGE DEPARTMENT
ENGINEERING GEOLOGY SECTION

STATE OF CALIFORNIA
DEPARTMENT OF PUBLIC WORKS
DIVISION OF HIGHWAYS

SHEET 12 OF 12

CHAPMAN AVENUE UNDERCROSSING

LOG OF TEST BORINGS

SCALE As Noted | BRIDGE 55-456 | FILE | DRAWING 55456-12

185

FILENAME => c0F031qe038.tif

Disregard prints bearing earlier numbers → PREL. DRAWING No. PR-

c0F031qe038.tif

Dist	COUNTY	ROUTE	POST MILES TOTAL PROJECT	SHEET No.	TOTAL SHEETS
12	Ora	57	16.2/18.6	460	960

REGISTERED CIVIL ENGINEER — DATE 7/15/09

12-14-09
PLANS APPROVAL DATE

THE STATE OF CALIFORNIA OR ITS OFFICERS OR AGENTS SHALL NOT BE RESPONSIBLE FOR THE ACCURACY OR COMPLETENESS OF SCANNED COPIES OF THIS PLAN SHEET.

REGISTERED PROFESSIONAL ENGINEER — Chien-Tai Yang — No. C 66394 — Exp. 6-30-10 — CIVIL — STATE OF CALIFORNIA

ORANGE COUNTY TRANSPORTATION AUTHORITY
550 S. MAIN STREET
ORANGE, CA 92863-1584

EARTH MECHANICS, INC.
17660 NEWHOPE STREET, SUITE E
FOUNTAIN VALLEY, CA 92708

BENCHMARKS:

Vertical Datum NAVD 88

Designation: 1L-54-82 Elev = 153.171
Described by OCS 2002 - Found 3¼" OCS Aluminum Benchmark Disk Stamped "1L-54-82", set in the Top of a 6 in. by 6 in. Concrete Post. Monument is located along the Westerly Levee of the Santa Ana River, 0.25 Miles Northerly along Levee from the Centerline of Orangewood Avenue, 200 ft. Northeasterly of the Easterly Leg of the Anaheim Angels 200 ft. tall sign, 69 ft. Westerly of the Centerline of the Bike Trail and 1.5 ft. Westerly of a Steel OCS Witness Post. Monument is set 0.3 below the Ground.

Designation: 2G-25-70 Elev = 275.872
Described by OCS 2003 - Found 3¼" OCS Aluminum Benchmark Disk Stamped "2G-25-70", set in the Southeasterly Corner of a 4 ft by 6 ft Concrete Catch Basin. Monument is Located in the Northwesterly Corner of the Intersection of Yorba Linda Boulevard and Deerpark Drive, 75 ft Westerly of the Centerline of Deerpark and 46 ft Northerly of the Centerline of Yorba Linda. Monument is set Level with the Sidewalk.

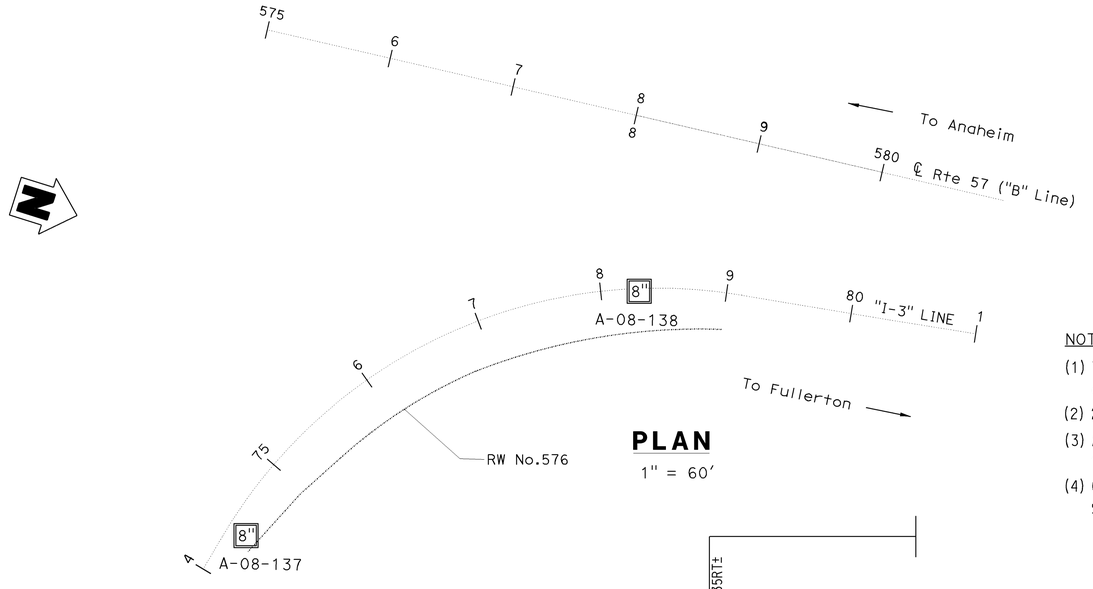

PLAN
1" = 60'

NOTES:

(1) This LOTB sheet was prepared in accordance with the Caltrans Soil and Rock Logging, Classification and Presentation Manual (June 2007)
(2) 2.4" samples were taken using a California Modified Sampler.
(3) An automatic trip hammer system consisting of a hammer weight of 140 lbs falling a distance of 30" was used to advance the drive sampler.
(4) Conversion factor from 2.4" Modified California Ring Sampler blowcounts to Standard Penetration Test (SPT) blowcounts is 0.5.

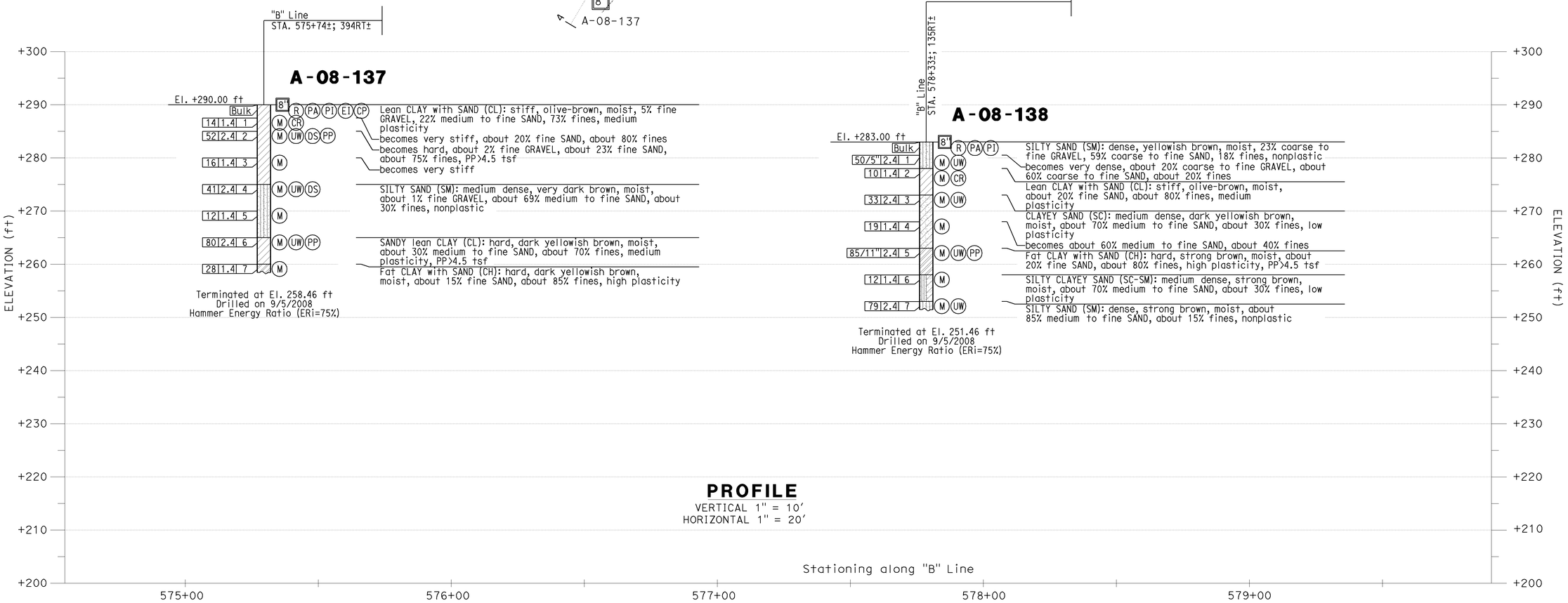

PROFILE
VERTICAL 1" = 10'
HORIZONTAL 1" = 20'

DESIGN OVERSIGHT	DRAWN BY: J.Fang	FIELD INVESTIGATION BY:	PREPARED FOR THE STATE OF CALIFORNIA DEPARTMENT OF TRANSPORTATION	C.Yang PROJECT ENGINEER	BRIDGE NO.
SIGN OFF DATE	CHECKED BY: L.Cheang	R.Jie			POST MILES 16.2/18.6

RETAINING WALL NO. 576
LOG OF TEST BORINGS No. 1 — R-48

DESIGN GENERAL PLAN SHEET (ENGLISH) (REV. 2/25/05)

ORIGINAL SCALE IN INCHES FOR REDUCED PLANS 0 1 2 3

CU 12
EA 0F0311

DISREGARD PRINTS BEARING EARLIER REVISION DATES →

REVISION DATES (PRELIMINARY STAGE ONLY): 4/30/09

SHEET OF

FILE => c0F031qe039.dgn

USERNAME => trmnguye DATE PLOTTED => 17-DEC-2009 TIME PLOTTED => 08:00

Dist	COUNTY	ROUTE	POST MILES TOTAL PROJECT	SHEET No.	TOTAL SHEETS
12	Ora	57	16.2/18.6	461	960

REGISTERED CIVIL ENGINEER — 7/15/09 DATE

12-14-09
PLANS APPROVAL DATE

REGISTERED PROFESSIONAL ENGINEER — Chien-Tai Yang — No. C 66394 — Exp. 6-30-10 — CIVIL — STATE OF CALIFORNIA

THE STATE OF CALIFORNIA OR ITS OFFICERS OR AGENTS SHALL NOT BE RESPONSIBLE FOR THE ACCURACY OR COMPLETENESS OF SCANNED COPIES OF THIS PLAN SHEET.

ORANGE COUNTY TRANSPORTATION AUTHORITY
550 S. MAIN STREET
ORANGE, CA 92863-1584

EARTH MECHANICS, INC.
17660 NEWHOPE STREET, SUITE E
FOUNTAIN VALLEY, CA 92708

REFERENCE: CALTRANS SOIL & ROCK LOGGING, CLASSIFICATION, AND PRESENTATION MANUAL (JUNE 2007)

CEMENTATION

Description	Criteria
Weak	Crumbles or breaks with handling or little finger pressure.
Moderate	Crumbles or breaks with considerable finger pressure.
Strong	Will not crumble or break with finger pressure.

BOREHOLE IDENTIFICATION

Symbol	Hole Type	Description
Size	A	Auger Boring
Size	R P	Rotary drilled boring Rotary percussion boring (air)
Size	R	Rotary drilled diamond core
Size	HD HA	Hand driven (1-inch soil tube) Hand Auger
●	D	Dynamic Cone Penetration Boring
▲	CPT	Cone Penetration Test (ASTM D 5778-95)
⬚	O	Other

Note: Size in inches.

CONSISTENCY OF COHESIVE SOILS

Description	Unconfined Compressive Strength (tsf)	Pocket Penetrometer Measurement (tsf)	Torvane Measurement (tsf)	Field Approximation
Very Soft	< 0.25	< 0.25	< 0.12	Easily penetrated several inches by fist
Soft	0.25 to 0.50	0.25 to 0.50	0.12 to 0.25	Easily penetrated several inches by thumb
Medium Stiff	0.50 to 1.0	0.50 to 1.0	0.25 to 0.50	Penetrated several inches by thumb with moderate effort
Stiff	1 to 2	1 to 2	0.50 to 1.0	Readily indented by thumb but penetrated only with great effort
Very Stiff	2 to 4	2 to 4	1.0 to 2.0	Readily indented by thumbnail
Hard	> 4.0	> 4.0	> 2.0	Indented by thumbnail with difficulty

PLASTICITY OF FINE-GRAINED SOILS

Description	Criteria
Nonplastic	A 1/8-inch thread cannot be rolled at any water content.
Low	The thread can barely be rolled and the lump cannot be formed when drier than the plastic limit.
Medium	The thread is easy to roll and not much time is required to reach the plastic limit. The thread cannot be rerolled after reaching the plastic limit. The lump crumbles when drier than the plastic limit.
High	It takes considerable time rolling and kneading to reach the plastic limit. The thread can be rerolled several times after reaching the plastic limit. The lump can be formed without crumbling when drier than the plastic limit.

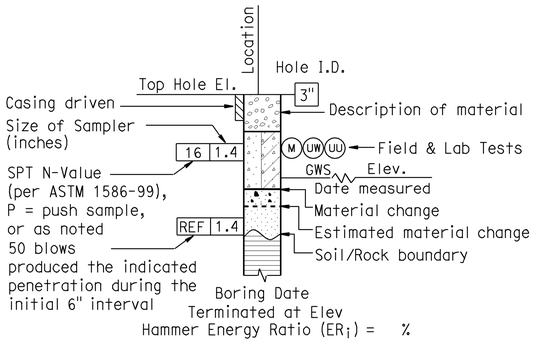

ROTARY BORING

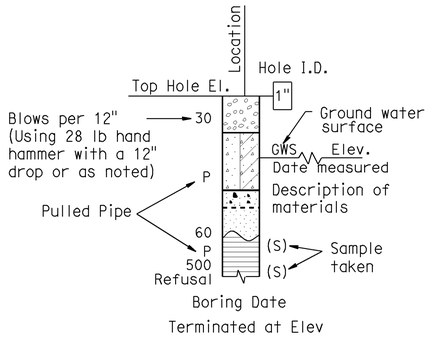

HAND BORING

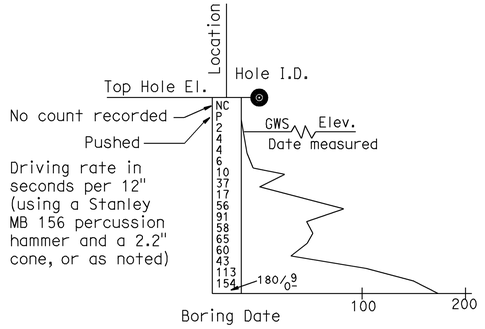

DYNAMIC CONE PENETRATION BORING

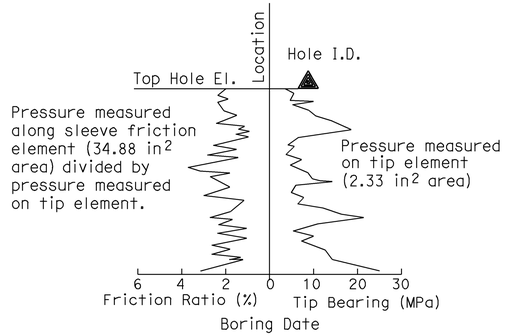

CONE PENETRATION TEST (CPT) SOUNDING

DESIGN OVERSIGHT SIGN OFF DATE	DRAWN BY: J.Fang CHECKED BY: L.Cheang	FIELD INVESTIGATION BY: R.Jie	PREPARED FOR THE STATE OF CALIFORNIA DEPARTMENT OF TRANSPORTATION	C. Yang PROJECT ENGINEER	BRIDGE NO. POST MILES 16.2/18.6	RETAINING WALL NO. 576 LOG OF TEST BORINGS NO. 2 — R-49
DESIGN GENERAL PLAN SHEET (ENGLISH) (REV. 2/25/05)	ORIGINAL SCALE IN INCHES FOR REDUCED PLANS 0 1 2 3		CU 12 EA 0F0311	DISREGARD PRINTS BEARING EARLIER REVISION DATES →	REVISION DATES (PRELIMINARY STAGE ONLY)	SHEET OF

FILE => c0F031qe040.dgn

USERNAME => ttrmnguye DATE PLOTTED => 17-DEC-2009 TIME PLOTTED => 08:00

REFERENCE: CALTRANS SOIL & ROCK LOGGING, CLASSIFICATION, AND PRESENTATION MANUAL (JUNE 2007)

GROUP SYMBOLS AND NAMES

Graphic/Symbol	Group Names	Graphic/Symbol	Group Names
GW	Well-graded GRAVEL Well-graded GRAVEL with SAND	CL	Lean CLAY Lean CLAY with SAND Lean CLAY with GRAVEL SANDY lean CLAY SANDY lean CLAY with GRAVEL GRAVELLY lean CLAY GRAVELLY lean CLAY with SAND
GP	Poorly graded GRAVEL Poorly graded GRAVEL with SAND		
GW-GM	Well-graded GRAVEL with SILT Well-graded GRAVEL with SILT and SAND	CL-ML	SILTY CLAY SILTY CLAY with SAND SILTY CLAY with GRAVEL SANDY SILTY CLAY SANDY SILTY CLAY with GRAVEL GRAVELLY SILTY CLAY GRAVELLY SILTY CLAY with SAND
GW-GC	Well-graded GRAVEL with CLAY (or SILTY CLAY) Well-graded GRAVEL with CLAY and SAND (or SILTY CLAY and SAND)		
GP-GM	Poorly graded GRAVEL with SILT Poorly graded GRAVEL with SILT and SAND	ML	SILT SILT with SAND SILT with GRAVEL SANDY SILT SANDY SILT with GRAVEL GRAVELLY SILT GRAVELLY SILT with SAND
GP-GC	Poorly graded GRAVEL with CLAY (or SILTY CLAY) Poorly graded GRAVEL with CLAY and SAND (or SILTY CLAY and SAND)		
GM	SILTY GRAVEL SILTY GRAVEL with SAND	OL	ORGANIC lean CLAY ORGANIC lean CLAY with SAND ORGANIC lean CLAY with GRAVEL SANDY ORGANIC lean CLAY SANDY ORGANIC lean CLAY with GRAVEL GRAVELLY ORGANIC lean CLAY GRAVELLY ORGANIC lean CLAY with SAND
GC	CLAYEY GRAVEL CLAYEY GRAVEL with SAND		
GC-GM	SILTY, CLAYEY GRAVEL SILTY, CLAYEY GRAVEL with SAND	OL	ORGANIC SILT ORGANIC SILT with SAND ORGANIC SILT with GRAVEL SANDY ORGANIC SILT SANDY ORGANIC SILT with GRAVEL GRAVELLY ORGANIC SILT GRAVELLY ORGANIC SILT with SAND
SW	Well-graded SAND Well-graded SAND with GRAVEL		
SP	Poorly graded SAND Poorly graded SAND with GRAVEL	CH	Fat CLAY Fat CLAY with SAND Fat CLAY with GRAVEL SANDY fat CLAY SANDY fat CLAY with GRAVEL GRAVELLY fat CLAY GRAVELLY fat CLAY with SAND
SW-SM	Well-graded SAND with SILT Well-graded SAND with SILT and GRAVEL		
SW-SC	Well-graded SAND with CLAY (or SILTY CLAY) Well-graded SAND with CLAY and GRAVEL (or SILTY CLAY and GRAVEL)	MH	Elastic SILT Elastic SILT with SAND Elastic SILT with GRAVEL SANDY elastic SILT SANDY elastic SILT with GRAVEL GRAVELLY elastic SILT GRAVELLY elastic SILT with SAND
SP-SM	Poorly graded SAND with SILT Poorly graded SAND with SILT and GRAVEL		
SP-SC	Poorly graded SAND with CLAY (or SILTY CLAY) Poorly graded SAND with CLAY and GRAVEL (or SILTY CLAY and GRAVEL)	OH	ORGANIC fat CLAY ORGANIC fat CLAY with SAND ORGANIC fat CLAY with GRAVEL SANDY ORGANIC fat CLAY SANDY ORGANIC fat CLAY with GRAVEL GRAVELLY ORGANIC fat CLAY GRAVELLY ORGANIC fat CLAY with SAND
SM	SILTY SAND SILTY SAND with GRAVEL		
SC	CLAYEY SAND CLAYEY SAND with GRAVEL	OH	ORGANIC elastic SILT ORGANIC elastic SILT with SAND ORGANIC elastic SILT with GRAVEL SANDY ORGANIC elastic SILT SANDY ORGANIC elastic SILT with GRAVEL GRAVELLY ORGANIC elastic SILT GRAVELLY ORGANIC elastic SILT with SAND
SC-SM	SILTY, CLAYEY SAND SILTY, CLAYEY SAND with GRAVEL		
PT	PEAT	OL/OH	ORGANIC SOIL ORGANIC SOIL with SAND ORGANIC SOIL with GRAVEL SANDY ORGANIC SOIL SANDY ORGANIC SOIL with GRAVEL GRAVELLY ORGANIC SOIL GRAVELLY ORGANIC SOIL with SAND
	COBBLES COBBLES and BOULDERS BOULDERS		

FIELD AND LABORATORY TESTING

- (C) Consolidation (ASTM D 2435)
- (CL) Collapse Potential (ASTM D 5333)
- (CP) Compaction Curve (CTM 216)
- (CR) Corrosivity Testing (CTM 643, CTM 422, CTM 417)
- (CU) Consolidated Undrained Triaxial (ASTM D 4767)
- (DS) Direct Shear (ASTM D 3080)
- (EI) Expansion Index (ASTM D 4829)
- (M) Moisture Content (ASTM D 2216)
- (OC) Organic Content-% (ASTM D 2974)
- (P) Permeability (CTM 220)
- (PA) Particle Size Analysis (ASTM D 422)
- (PI) Plasticity Index (AASHTO T 90) Liquid Limit (AASHTO T 89)
- (PL) Point Load Index (ASTM D 5731)
- (PM) Pressure Meter
- (PP) Pocket Penetrometer
- (R) R-Value (CTM 301)
- (SE) Sand Equivalent (CTM 217)
- (SG) Specific Gravity (AASHTO T 100)
- (SL) Shrinkage Limit (ASTM D 427)
- (SW) Swell Potential (ASTM D 4546)
- (TV) Pocket Torvane
- (UC) Unconfined Compression-Soil (ASTM D 2166); Unconfined Compression-Rock (ASTM D 2938)
- (UU) Unconsolidated Undrained Triaxial (ASTM D 2850)
- (UW) Unit Weight (ASTM D 4767)
- (VS) Vane Shear (AASHTO T 223)

Dist	COUNTY	ROUTE	POST MILES TOTAL PROJECT	SHEET No.	TOTAL SHEETS
12	Ora	57	16.2/18.6	462	960

REGISTERED CIVIL ENGINEER — 7/15/09 DATE

12-14-09
PLANS APPROVAL DATE

REGISTERED PROFESSIONAL ENGINEER — Chien-Tai Yang — No. C 66394 — Exp. 6-30-10 — CIVIL — STATE OF CALIFORNIA

THE STATE OF CALIFORNIA OR ITS OFFICERS OR AGENTS SHALL NOT BE RESPONSIBLE FOR THE ACCURACY OR COMPLETENESS OF SCANNED COPIES OF THIS PLAN SHEET.

ORANGE COUNTY TRANSPORTATION AUTHORITY
550 S. MAIN STREET
ORANGE, CA 92863-1584

EARTH MECHANICS, INC.
17660 NEWHOPE STREET, SUITE E
FOUNTAIN VALLEY, CA 92708

APPARENT DENSITY OF COHESIONLESS SOILS

Description	SPT N_{60} (Blows / 12 inches)
Very loose	0 - 4
Loose	5 - 10
Medium Dense	11 - 30
Dense	31 - 50
Very Dense	> 50

MOISTURE

Description	Criteria
Dry	Absence of moisture, dusty, dry to the touch
Moist	Damp but no visible water
Wet	Visible free water, usually soil is below water table

PERCENT OR PROPORTION OF SOILS

Description	Criteria
Trace	Particles are present but estimated to be less than 5%
Few	5 to 10%
Little	15 to 25%
Some	30 to 45%
Mostly	50 to 100%

PARTICLE SIZE

Description		Size
Boulder		> 12"
Cobble		3" to 12"
Gravel	Coarse	3/4" to 3"
	Fine	No. 4 to 3/4"
Sand	Coarse	No. 10 to No. 4
	Medium	No. 40 to No. 10
	Fine	No. 200 to No. 40

DESIGN OVERSIGHT

SIGN OFF DATE

DRAWN BY: J.Fang

CHECKED BY: L.Cheang

FIELD INVESTIGATION BY: R.Jie

PREPARED FOR THE STATE OF CALIFORNIA DEPARTMENT OF TRANSPORTATION

C. Yang
PROJECT ENGINEER

BRIDGE NO.

POST MILES 16.2/18.6

RETAINING WALL NO. 576

LOG OF TEST BORINGS NO. 3

R-50

DESIGN GENERAL PLAN SHEET (ENGLISH) (REV. 2/25/05)

ORIGINAL SCALE IN INCHES FOR REDUCED PLANS 0 1 2 3

CU 12
EA 0F0311

DISREGARD PRINTS BEARING EARLIER REVISION DATES →

REVISION DATES (PRELIMINARY STAGE ONLY)

SHEET OF

FILE => c0F031qe041.dgn

USERNAME => ttmmguye DATE PLOTTED => 17-DEC-2009 TIME PLOTTED => 08:01

DIST	COUNTY	ROUTE	POST MILES TOTAL PROJECT	SHEET No	TOTAL SHEETS
12	Ora	57	16.2/18.6	463	960

REGISTERED CIVIL ENGINEER — DATE 06/17/09

12-14-09
PLANS APPROVAL DATE

REGISTERED PROFESSIONAL ENGINEER — Chad W Harden — No. 67648 — Exp. 06/30/11 — CIVIL — STATE OF CALIFORNIA

The State of California or its officers or agents shall not be responsible for the accuracy or completeness of electronic copies of this plan sheet.

OCTA
550 S MAIN STREET
ORANGE, CA 92868

RBF CONSULTING
14725 ALTON PKWY
IRVINE, CA 92618

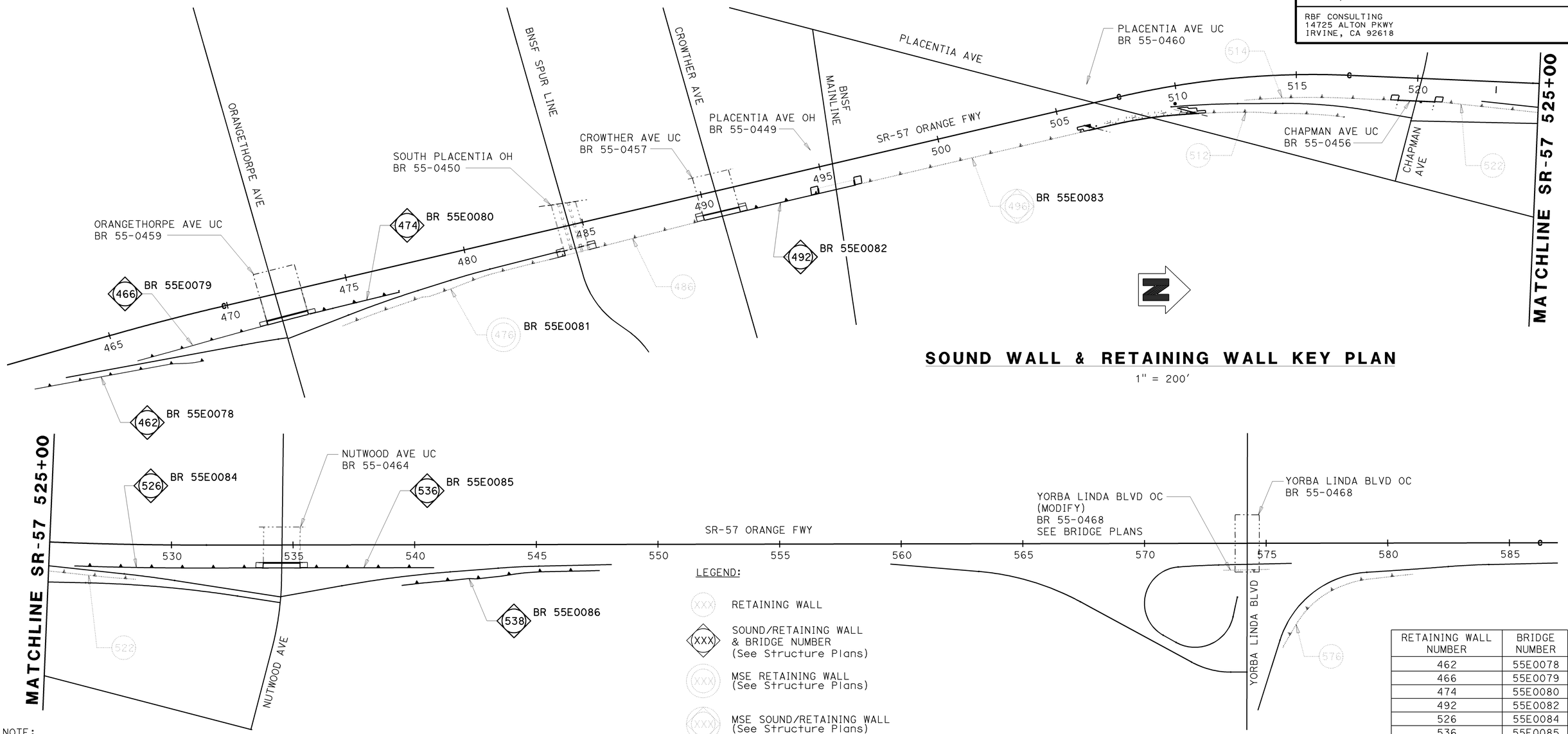

SOUND WALL & RETAINING WALL KEY PLAN

1" = 200'

LEGEND:

- XXX — RETAINING WALL
- (XXX) — SOUND/RETAINING WALL & BRIDGE NUMBER (See Structure Plans)
- XXX — MSE RETAINING WALL (See Structure Plans)
- XXX — MSE SOUND/RETAINING WALL (See Structure Plans)

RETAINING WALL NUMBER	BRIDGE NUMBER
462	55E0078
466	55E0079
474	55E0080
492	55E0082
526	55E0084
536	55E0085
538	55E0086

NOTE:
THE CONTRACTOR SHALL VERIFY ALL CONTROLLING FIELD DIMENSIONS BEFORE ORDERING OR FABRICATING ANY MATERIAL.

Jon Hamaguchi
DESIGN OVERSIGHT — Jon Hamaguchi

6-24-09
SIGN OFF DATE

	BY	CHECKED
DESIGN	Chad Harden	Kevin Burke
DETAILS	Gerald Fetters	Chad Harden
QUANTITIES	Kelly Gillis	Chad Harden

PREPARED FOR THE STATE OF CALIFORNIA DEPARTMENT OF TRANSPORTATION

Chad W. Harden
PROJECT ENGINEER

BRIDGE NO. 55E0078, 55E0079, 55E0080, 55E0082, 55E0083, 55E0084, 55E0085, 55E0086
POST MILE Varies

SOUND WALL & RETAINING WALL KEY PLAN

DESIGN DETAIL SHEET (ENGLISH) (REV. 2/25/05)

ORIGINAL SCALE IN INCHES FOR REDUCED PLANS 0 1 2 3

CU 12
EA 0F0311

DISREGARD PRINTS BEARING EARLIER REVISION DATES →

REVISION DATES (PRELIMINARY STAGE ONLY): 2/13/09 4/6/09

SHEET 1 OF 83

FILE => 55e-462-a_kp01.dgn

USERNAME => frmoguye DATE PLOTTED => 17-DEC-2009 TIME PLOTTED => 08:04

INDEX TO PLANS

SHEET NO.	TITLE
1	Sound Wall & Retaining Wall - Key Plan
2	Sound Wall & Retaining Wall - Index to Plans
3	Retaining Wall No. 462 - Structure Plan No. 1
4	Retaining Wall No. 462 - Structure Plan No. 2
5	Retaining Wall No. 462 - Structure Plan No. 3
6	Retaining Wall No. 462 - Foundation Plan
7	Retaining Wall No. 466 - Structure Plan No. 1
8	Retaining Wall No. 466 - Structure Plan No. 2
9	Retaining Wall No. 474 - Structure Plan No. 1
10	Retaining Wall No. 474 - Structure Plan No. 2
11	Retaining Wall No. 492 - General Plan
12	Retaining Wall No. 492 - Foundation Plan No. 1
13	Retaining Wall No. 492 - Foundation Plan No. 2
14	Retaining Wall No. 526 - Structure Plan No. 1
15	Retaining Wall No. 526 - Structure Plan No. 2
16	Retaining Wall No. 526 - Structure Plan No. 3
17	Retaining Wall No. 536 - Structure Plan No. 1
18	Retaining Wall No. 536 - Structure Plan No. 2
19	Retaining Wall No. 538 - Structure Plan No. 1
20	Retaining Wall No. 538 - Structure Plan No. 2
21	Retaining Wall No. 538 - Structure Plan No. 3
22	Soundwall - Masonry Block with Barrier on Retaining Wall - Details No. 1
23	Soundwall - Masonry Block with Barrier on Retaining Wall - Details No. 2
24	Soundwall - Masonry Block with Barrier on Retaining Wall - Details No. 3
25	Retaining Wall Details - Retaining Wall Type 1SWB
26	Retaining Wall Details - Retaining Wall Type 1SWBP - Details No. 1
27	Retaining Wall Details - Retaining Wall Type 1SWBP - Details No. 2
28	Retaining Wall Details - Type A and Type B Barrier Details
29	Retaining Wall Details - Limits of Payment for Excavation and Backfill
30	Sound Wall on Retaining Wall Details - Miscellaneous Details No. 1
31	Sound Wall on Retaining Wall Details - Miscellaneous Details No. 2
32	Sound Wall on Retaining Wall Details - Miscellaneous Details No. 3
33	Sound Wall on Retaining Wall Details - Miscellaneous Details No. 4
34	Sound Wall on Retaining Wall Details - Wall 462 Channel Bridge Details
35	Sound Wall on Retaining Wall Details - Overhead Sign Pedestal Details
36	Retaining Wall No. 462 - Log of Test Borings No. 1
37	Retaining Wall No. 462 - Log of Test Borings No. 2
38	Retaining Wall No. 462 - Log of Test Borings No. 3
39	Retaining Wall No. 462 - Log of Test Borings No. 4
40	Retaining Wall No. 462 - Log of Test Borings No. 5
41	Retaining Wall No. 462 - Log of Test Borings No. 6
42	Retaining Wall No. 466 - Log of Test Borings No. 1
43	Retaining Wall No. 466 - Log of Test Borings No. 2
44	Retaining Wall No. 466 - Log of Test Borings No. 3
45	Retaining Wall No. 466 - Log of Test Borings No. 4
46	Retaining Wall No. 466 - Log of Test Borings No. 5
47	Retaining Wall No. 466 - Log of Test Borings No. 6
48	Retaining Wall No. 466 - Log of Test Borings No. 7
49	Retaining Wall No. 466 - Log of Test Borings No. 8
50	Retaining Wall No. 474 - Log of Test Borings No. 1
51	Retaining Wall No. 474 - Log of Test Borings No. 2
52	Retaining Wall No. 474 - Log of Test Borings No. 3
53	Retaining Wall No. 474 - Log of Test Borings No. 4
54	Retaining Wall No. 474 - Log of Test Borings No. 5
55	Retaining Wall No. 474 - Log of Test Borings No. 6
56	Retaining Wall No. 474 - Log of Test Borings No. 7
57	Retaining Wall No. 492 - Log of Test Borings No. 1
58	Retaining Wall No. 492 - Log of Test Borings No. 2
59	Retaining Wall No. 492 - Log of Test Borings No. 3
60	Retaining Wall No. 492 - Log of Test Borings No. 4
61	Retaining Wall No. 492 - Log of Test Borings No. 5
62	Retaining Wall No. 492 - Log of Test Borings No. 6
63	Retaining Wall No. 492 - Log of Test Borings No. 7
64	Retaining Wall No. 492 - Log of Test Borings No. 8
65	Retaining Wall No. 492 - Log of Test Borings No. 9
66	Retaining Wall No. 526 - Log of Test Borings No. 1
67	Retaining Wall No. 526 - Log of Test Borings No. 2
68	Retaining Wall No. 526 - Log of Test Borings No. 3
69	Retaining Wall No. 526 - Log of Test Borings No. 4
70	Retaining Wall No. 526 - Log of Test Borings No. 5
71	Retaining Wall No. 526 - Log of Test Borings No. 6
72	Retaining Wall No. 526 - Log of Test Borings No. 7
73	Retaining Wall No. 536 - Log of Test Borings No. 1
74	Retaining Wall No. 536 - Log of Test Borings No. 2
75	Retaining Wall No. 536 - Log of Test Borings No. 3
76	Retaining Wall No. 536 - Log of Test Borings No. 4
77	Retaining Wall No. 536 - Log of Test Borings No. 5
78	Retaining Wall No. 536 - Log of Test Borings No. 6
79	Retaining Wall No. 538 - Log of Test Borings No. 1
80	Retaining Wall No. 538 - Log of Test Borings No. 2
81	Retaining Wall No. 538 - Log of Test Borings No. 3
82	Retaining Wall No. 538 - Log of Test Borings No. 4
83	Retaining Wall No. 538 - Log of Test Borings No. 5

NOTE:
THE CONTRACTOR SHALL VERIFY ALL CONTROLLING FIELD DIMENSIONS BEFORE ORDERING OR FABRICATING ANY MATERIAL.

DIST	COUNTY	ROUTE	POST MILES TOTAL PROJECT	SHEET No	TOTAL SHEETS
12	Ora	57	16.2/18.6	464	960

REGISTERED CIVIL ENGINEER — DATE 06/17/09

12-14-09
PLANS APPROVAL DATE

Chad W Harden
No. 67648
Exp. 06/30/11
CIVIL
REGISTERED PROFESSIONAL ENGINEER
STATE OF CALIFORNIA

The State of California or its officers or agents shall not be responsible for the accuracy or completeness of electronic copies of this plan sheet.

OCTA
550 S MAIN STREET
ORANGE, CA 92868

RBF CONSULTING
14725 ALTON PKWY
IRVINE, CA 92618

STANDARD PLANS DATED MAY 2006

A10A	Acronyms and Abbreviations (Sheet 1 of 2)
A10B	Acronyms and Abbreviations (Sheet 2 of 2)
A10C	Symbols (Sheet 1 of 2)
A10D	Symbols (Sheet 2 of 2)
RSP A76A	Concrete Barrier Type 60
B0-3	Bridge Details
B2-5	Pile Details Class 90 and Class 140
B3-8	RW Details No. 1
B3-9	RW Details No. 2
B11-56	Concrete Barrier Type 736
RSP B15-6	Sound Wall Masonry Block on Type 736S/SV Barrier Details (1)
RSP B15-7	Sound Wall Masonry Block on Type 736S/SV Barrier Details (2)
RSP B15-8	Sound Wall Masonry Block on Type 736S/SV Barrier Details (3)
B15-12	Sound Wall Masonry Block on Barrier 5'-0" Access Gate Details (1)
B15-13	Sound Wall Masonry Block on Barrier 5'-0" Access Gate Details (2)
B15-14	Sound Wall Masonry Block Access Gate Locking Details

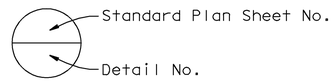

Jon Hanaguchi
DESIGN OVERSIGHT — Jon Hanaguchi
6-24-09
SIGN OFF DATE

	BY	CHECKED
DESIGN	Chad Harden	Kevin Burke
DETAILS	Gerald Fetters	Chad Harden
QUANTITIES	Kelly Gillis	Chad Harden

PREPARED FOR THE
STATE OF CALIFORNIA
DEPARTMENT OF TRANSPORTATION

Chad W. Harden
PROJECT ENGINEER

BRIDGE NO.
55E0078, 55E0079
55E0082, 55E0083
55E0084, 55E0085
55E0086
POST MILE
VARIES

SOUND WALL & RETAINING WALL
INDEX TO PLANS

DESIGN DETAIL SHEET (ENGLISH) (REV. 2/25/05)

ORIGINAL SCALE IN INCHES FOR REDUCED PLANS 0 1 2 3

CU 12
EA 0F0311

DISREGARD PRINTS BEARING EARLIER REVISION DATES →

REVISION DATES (PRELIMINARY STAGE ONLY): 2/13/09 | 5/6/09 | 6/17/09

SHEET 2 OF 83

FILE => 55e-462-a-itp01.dgn

USERNAME => rtrimmguye DATE PLOTTED => 17-DEC-2009 TIME PLOTTED => 08:04

DIST	COUNTY	ROUTE	POST MILES TOTAL PROJECT	SHEET No	TOTAL SHEETS
12	Ora	57	16.2/18.6	465	960

REGISTERED CIVIL ENGINEER — 06/17/09 DATE

12-14-09
PLANS APPROVAL DATE

REGISTERED PROFESSIONAL ENGINEER — Chad W Harden — No. 67648 — Exp. 06/30/11 — CIVIL — STATE OF CALIFORNIA

The State of California or its officers or agents shall not be responsible for the accuracy or completeness of electronic copies of this plan sheet.

OCTA
550 S MAIN STREET
ORANGE, CA 92868

RBF CONSULTING
14725 ALTON PKWY
IRVINE, CA 92618

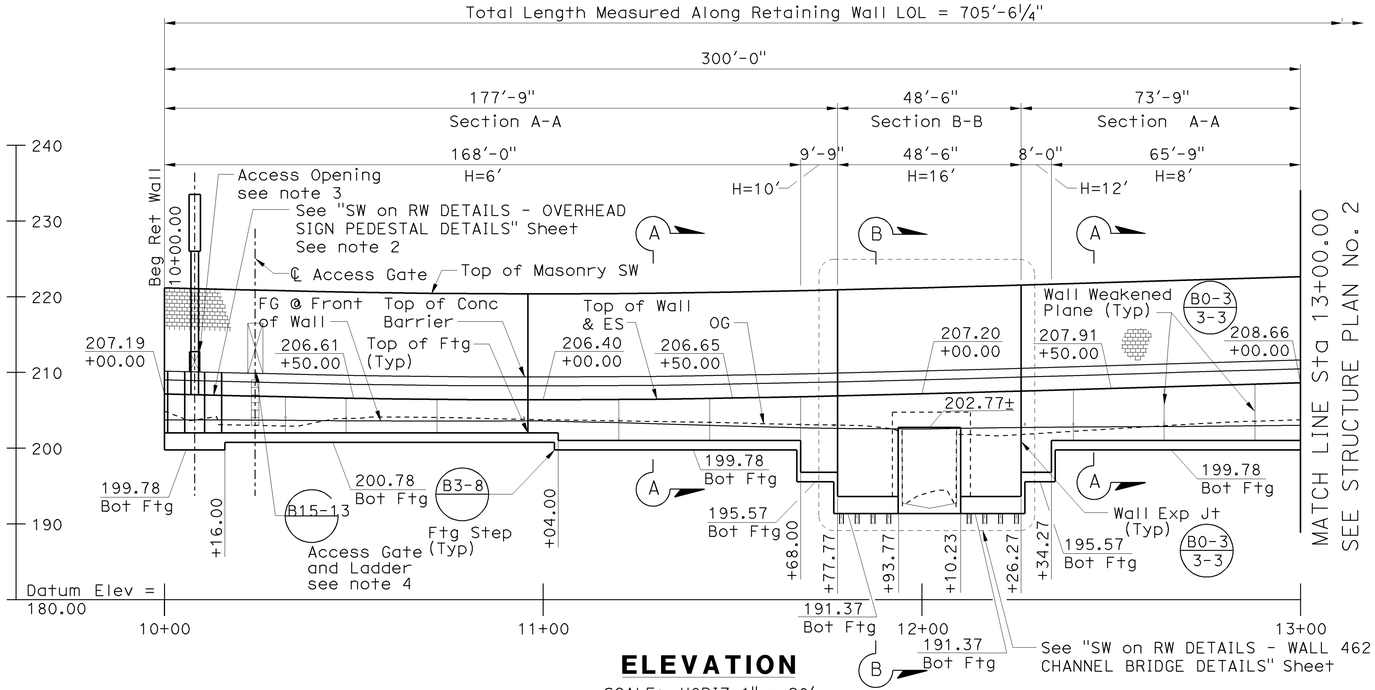

ELEVATION

SCALE: HORIZ 1" = 20'
VERT 1" = 10'

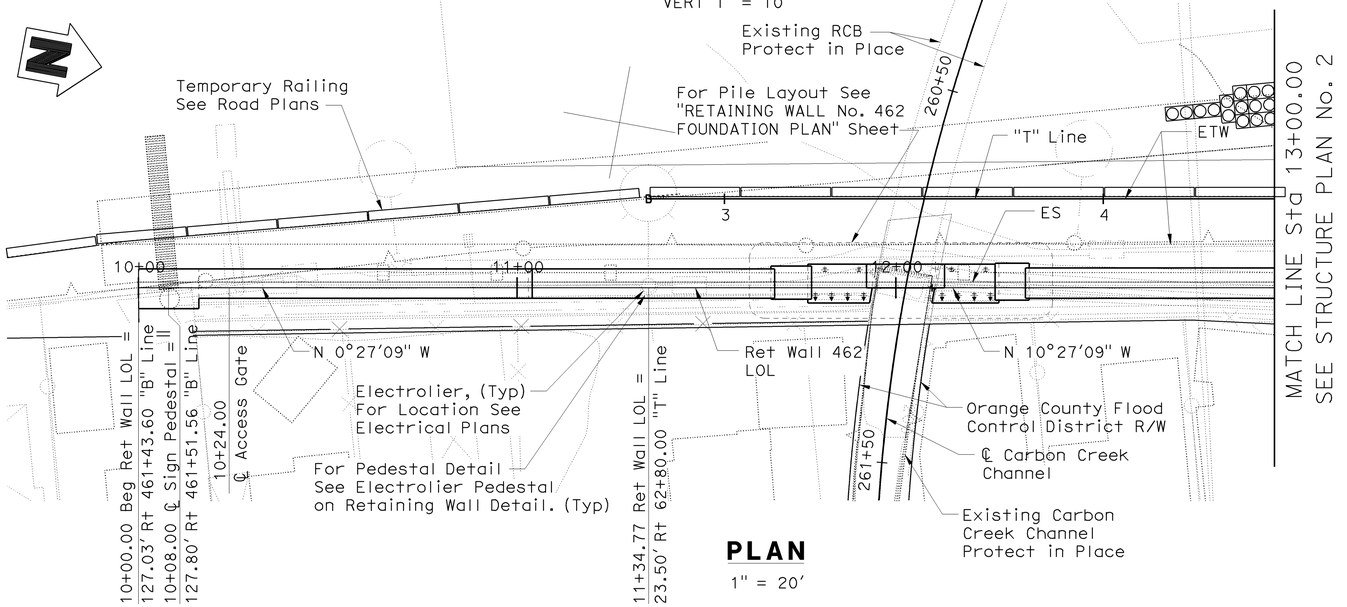

PLAN

1" = 20'

NOTE:
THE CONTRACTOR SHALL VERIFY ALL CONTROLLING FIELD DIMENSIONS BEFORE ORDERING OR FABRICATING ANY MATERIAL.

RETAINING WALL NO. 462 — BRIDGE NO 55E0078

QUANTITIES		
STRUCTURE EXCAVATION (RETAINING WALL)	1,351	CY
STRUCTURE BACKFILL (RETAINING WALL)	1,074	CY
FURNISH STEEL PILING (HP 10 X 42)	432	LF
DRIVE STEEL PILE (HP 10 X 42)	12	EA
16" CAST-IN-DRILLED-HOLE CONCRETE PILING	240	LF
STRUCTURAL CONCRETE, RETAINING WALL	533	CY
FRACTURED RIB TEXTURE	3,567	SQFT
DRILL AND BOND DOWEL	2	LF
SOUND WALL (MASONRY BLOCK)	7,752	SQFT
BAR REINFORCING STEEL (RETAINING WALL)	62,062	LB
CONCRETE BARRIER (TYPE 736A MODIFIED)	614	LF
CONCRETE BARRIER (TYPE 736SV MODIFIED)	44	LF
CONCRETE BARRIER (TYPE 736S MODIFIED)	30	LF

NOTES:

1. This Plan Accurate for Sound Wall and Retaining Wall Work Only.
2. For Sign Location and Details, See Roadway Plans, Sign Plans, and Sign Detail Sheets.
3. For Access Opening and Cover Plate, See "SOUND WALL - MASONRY BLOCK WITH BARRIER ON RETAINING WALL - DETAILS No. 3" Sheet.
4. For Barrier Modification of Access Gate, See Barrier at Access Gate Detail on "SOUND WALL - MASONRY BLOCK WITH BARRIER ON RETAINING WALL - DETAILS No. 3" Sheet.
5. For Sections A-A and B-B, See "RETAINING WALL No. 462 - STRUCTURE PLAN No. 3" Sheet.

DESIGN OVERSIGHT Jon Hamaguchi	DESIGN	BY Chad Harden	CHECKED Kevin Burke	LFD DESIGN	LIVE LOADING: 2 FOOT SURCHARGE		
6-24-09 SIGN OFF DATE	DETAILS	BY Gerald Fetters	CHECKED Chad Harden	LAYOUT	BY Gerald Fetters	CHECKED Chad Harden	
	QUANTITIES	BY Kelly Gillis	CHECKED Chad Harden	SPECIFICATIONS	BY S. Sheikh	PLANS AND SPECS COMPARED S. Sheikh	

PREPARED FOR THE STATE OF CALIFORNIA DEPARTMENT OF TRANSPORTATION

Chad W. Harden
PROJECT ENGINEER

BRIDGE NO. 55E0078
POST MILE 16.0

RETAINING WALL No. 462
STRUCTURE PLAN No. 1

DESIGN GENERAL PLAN SHEET (ENGLISH) (REV. 2/25/05)

ORIGINAL SCALE IN INCHES FOR REDUCED PLANS 0 1 2 3

CU 12
EA 0F0311

DISREGARD PRINTS BEARING EARLIER REVISION DATES

REVISION DATES (PRELIMINARY STAGE ONLY): 7/1/08 | 10/24/08 | 2/13/09 | 4/6/09 | 6/17/09

SHEET 3 OF 83

FILE => 55e-462-g-rw_to01.dgn

USERNAME => rtrmguye DATE PLOTTED => 17-DEC-2009 TIME PLOTTED => 08:04

DIST	COUNTY	ROUTE	POST MILES TOTAL PROJECT	SHEET No	TOTAL SHEETS
12	Ora	57	16.2/18.6	466	960

REGISTERED CIVIL ENGINEER — 06/17/09 DATE

12-14-09
PLANS APPROVAL DATE

REGISTERED PROFESSIONAL ENGINEER — Chad W Harden — No. 67648 — Exp. 06/30/11 — CIVIL — STATE OF CALIFORNIA

The State of California or its officers or agents shall not be responsible for the accuracy or completeness of electronic copies of this plan sheet.

OCTA
550 S MAIN STREET
ORANGE, CA 92868

RBF CONSULTING
14725 ALTON PKWY
IRVINE, CA 92618

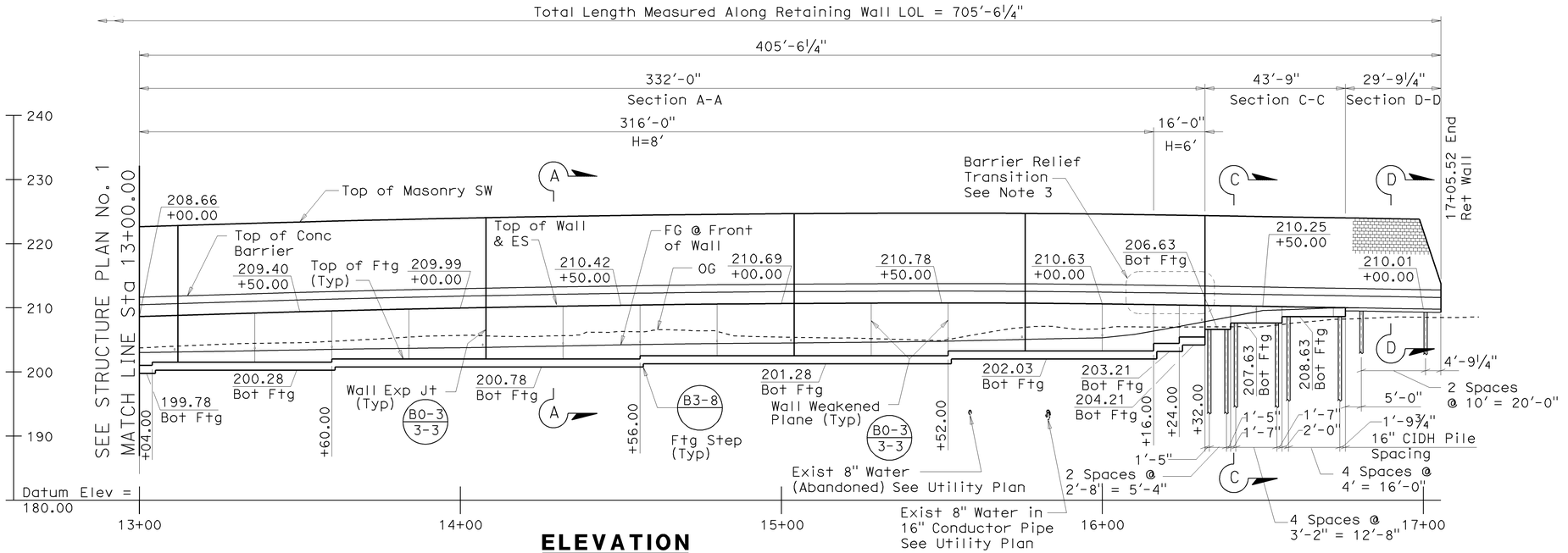

ELEVATION

SCALE: HORIZ 1" = 20'
VERT 1" = 10'

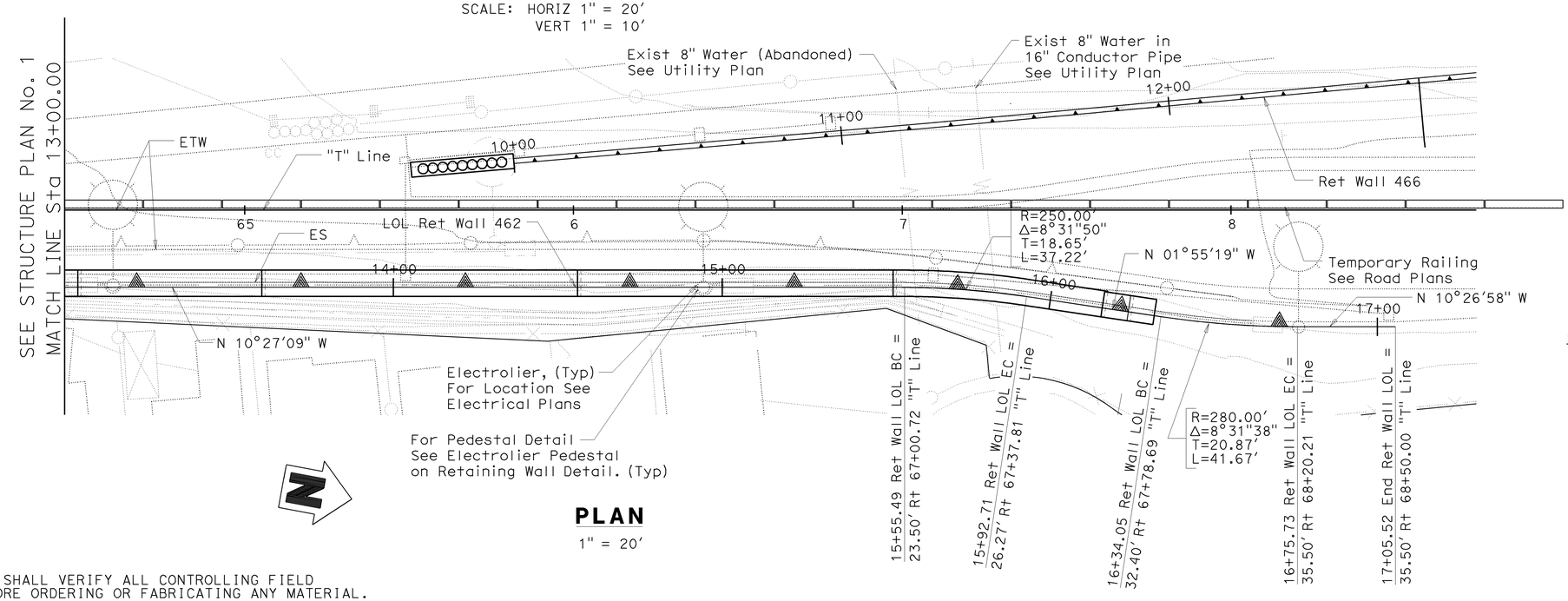

PLAN

1" = 20'

NOTES:

1. This Plan Accurate for Sound Wall and Retaining Wall Work Only.
2. For Sections A-A, C-C and D-D, See "RETAINING WALL No. 462 - STRUCTURE PLAN No. 3" Sheet.
3. For Barrier Relief Transition Detail, See "SOUND WALL ON RETAINING WALL DETAILS - MISCELLANEOUS DETAILS No. 1" Sheet.

NOTE:
THE CONTRACTOR SHALL VERIFY ALL CONTROLLING FIELD DIMENSIONS BEFORE ORDERING OR FABRICATING ANY MATERIAL.

Jon Hamaguchi
DESIGN OVERSIGHT Jon Hamaguchi
6-24-09
SIGN OFF DATE

	BY	CHECKED			
DESIGN	Chad Harden	Kevin Burke	LFD DESIGN	LIVE LOADING: 2 FOOT SURCHARGE	
DETAILS	Gerald Fetters	Chad Harden	LAYOUT	Gerald Fetters	Chad Harden
QUANTITIES	Kelly Gillis	Chad Harden	SPECIFICATIONS	S. Sheikh	PLANS AND SPECS COMPARED S. Sheikh

PREPARED FOR THE STATE OF CALIFORNIA
DEPARTMENT OF TRANSPORTATION

Chad W. Harden
PROJECT ENGINEER

BRIDGE NO. 55E0078
POST MILE 16.0

RETAINING WALL No. 462
STRUCTURE PLAN No. 2

DESIGN GENERAL PLAN SHEET (ENGLISH) (REV. 2/25/05)

ORIGINAL SCALE IN INCHES FOR REDUCED PLANS 0 1 2 3

CU 12
EA 0F0311

DISREGARD PRINTS BEARING EARLIER REVISION DATES →

REVISION DATES (PRELIMINARY STAGE ONLY): 7/3/08 | 10/24/08 | 2/13/09 | 4/16/09 | 6/17/09

SHEET 4 OF 83

FILE => 55e-462-g-rw_lo02.dgn

USERNAME = trmnguye DATE PLOTTED => 17-DEC-2009 TIME PLOTTED => 08:04

DIST	COUNTY	ROUTE	POST MILES TOTAL PROJECT	SHEET No	TOTAL SHEETS
12	Ora	57	16.2/18.6	467	960

REGISTERED CIVIL ENGINEER — DATE 06/17/09

12-14-09
PLANS APPROVAL DATE

REGISTERED PROFESSIONAL ENGINEER — Chad W Harden — No. 67648 — Exp. 06/30/11 — CIVIL — STATE OF CALIFORNIA

The State of California or its officers or agents shall not be responsible for the accuracy or completeness of electronic copies of this plan sheet.

OCTA
550 S MAIN STREET
ORANGE, CA 92868

RBF CONSULTING
14725 ALTON PKWY
IRVINE, CA 92618

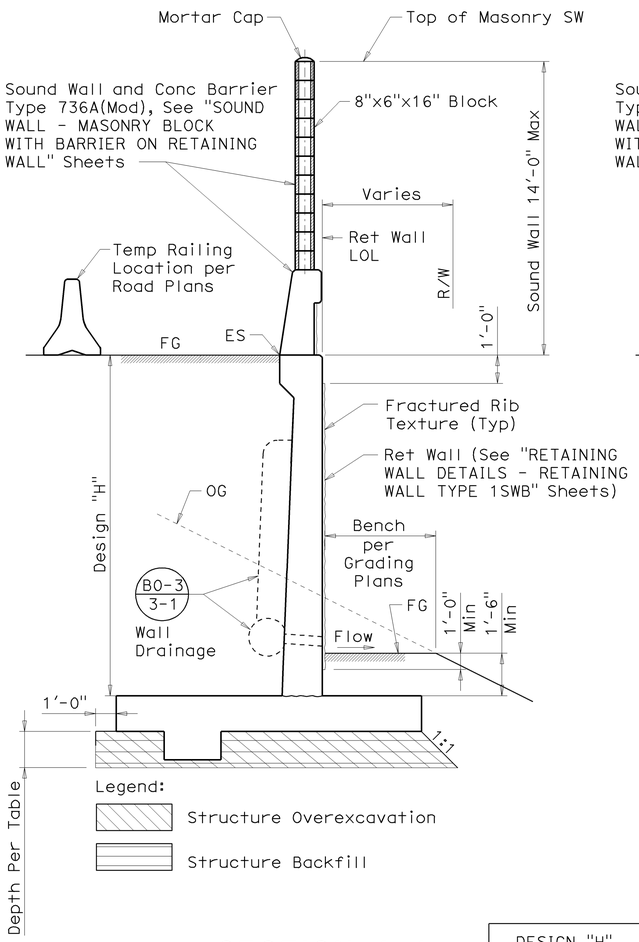

SECTION A-A

No Scale

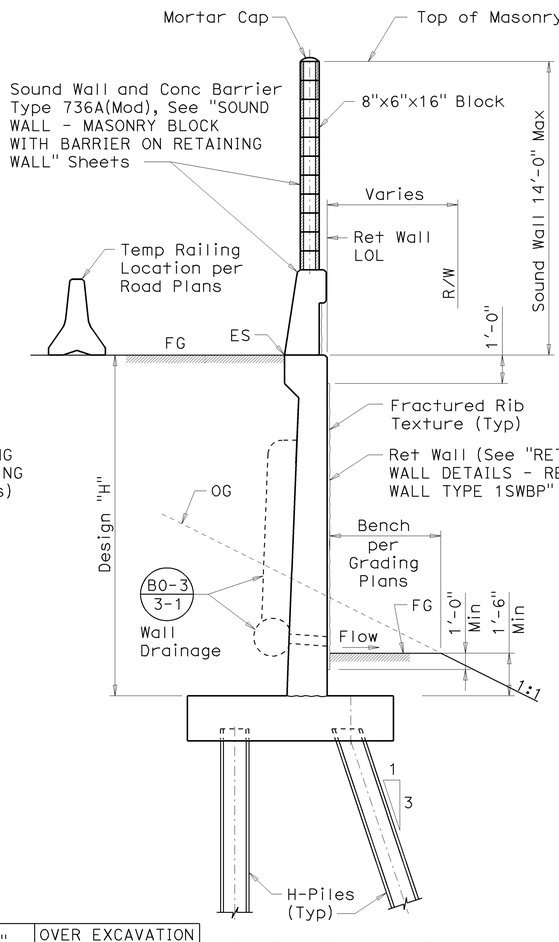

SECTION B-B

No Scale

DESIGN "H"	OVER EXCAVATION DEPTH
6'-0" AND LESS	6"
8'-0"	1'-0"
10'-0"	1'-0"

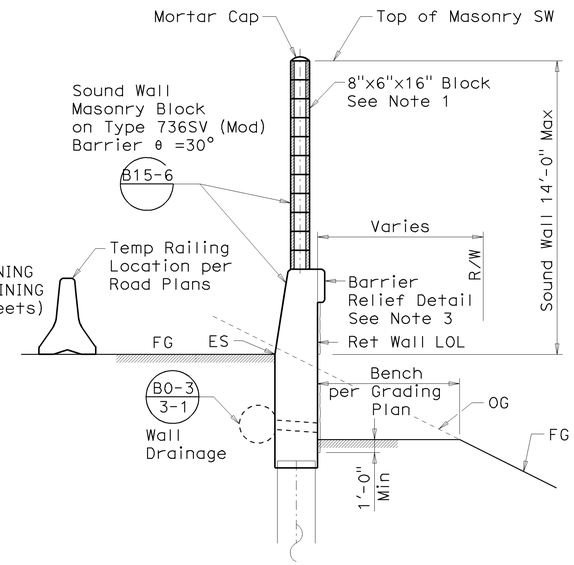

SECTION C-C

No Scale

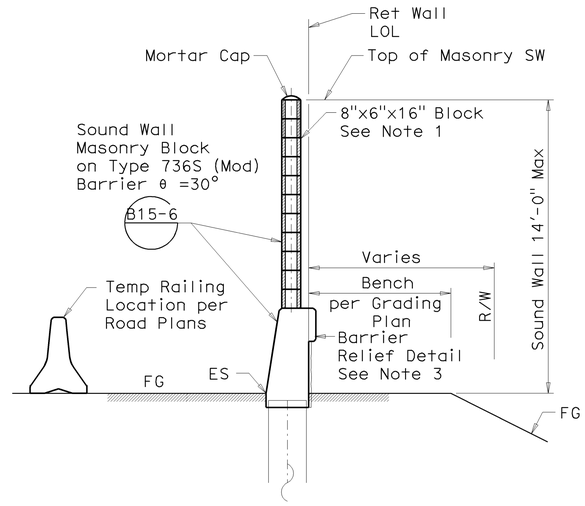

SECTION D-D

No Scale

NOTES:

1. For Sound Wall Texture and Color, See "SOUND WALL - MASONRY BLOCK WITH BARRIER ON RETAINING WALL - DETAILS No. 2" Sheet.
2. For Excavation and Backfill Details, See "RETAINING WALL DETAILS - LIMITS OF PAYMENT FOR EXCAVATION AND BACKFILL" Sheet.
3. For Barrier Relief Detail, See "SOUND WALL ON RETAINING WALL DETAILS - MISCELLANEOUS DETAILS No. 1" Sheet.

NOTE:
THE CONTRACTOR SHALL VERIFY ALL CONTROLLING FIELD DIMENSIONS BEFORE ORDERING OR FABRICATING ANY MATERIAL.

Jon Hamaguchi
DESIGN OVERSIGHT Jon Hamaguchi
6-24-09
SIGN OFF DATE

	BY	CHECKED
DESIGN	Chad Harden	Kevin Burke
DETAILS	Gerald Fetters	Chad Harden
QUANTITIES	Kelly Gillis	Chad Harden

LFD DESIGN	LIVE LOADING: 2 FOOT SURCHARGE		
LAYOUT	BY Gerald Fetters	CHECKED Chad Harden	
SPECIFICATIONS	BY S. Sheikh	PLANS AND SPECS COMPARED S. Sheikh	

PREPARED FOR THE STATE OF CALIFORNIA
DEPARTMENT OF TRANSPORTATION

Chad W. Harden
PROJECT ENGINEER

BRIDGE NO.	RETAINING WALL No. 462
55E0078	
POST MILE	STRUCTURE PLAN No. 3
16.0	

DESIGN GENERAL PLAN SHEET (ENGLISH) (REV. 2/25/05)

ORIGINAL SCALE IN INCHES FOR REDUCED PLANS 0 1 2 3

CU 12
EA 0F0311

DISREGARD PRINTS BEARING EARLIER REVISION DATES →

REVISION DATES (PRELIMINARY STAGE ONLY): 7/9/08 | 10/24/08 | 2/13/09 | 4/6/09 | 6/17/09

SHEET 5 OF 83

FILE => 55e-462-g-rw_lo03.dgn

USERNAME => trmoyse DATE PLOTTED => 17-DEC-2009 TIME PLOTTED => 08:04

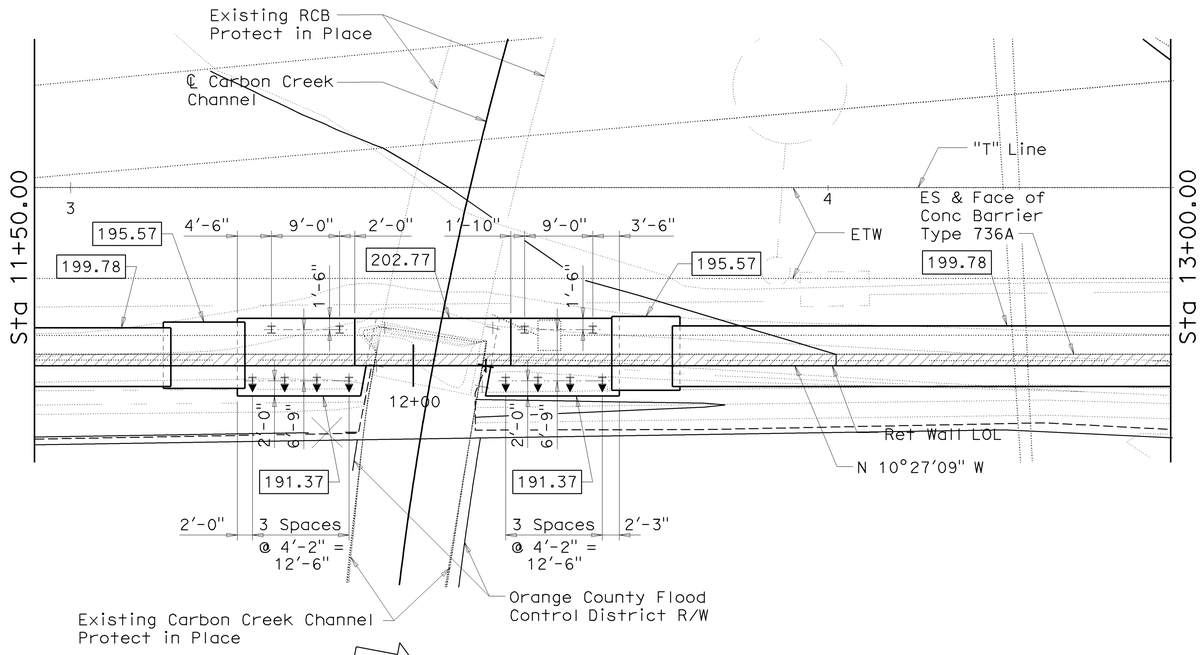

FOUNDATION PLAN

1" = 10'

PILE DATA TABLE

Location	Pile Type	Design Loading (Service) (kips)	Nominal Resistance (kips)		Design Tip Elevation (ft)	Specified Tip Elevation (ft)
			Compression	Tension		
All Piles	HP 10x42	90	180	90	+157.0 (a) & (b) +161.0 (c)	+157

NOTES:

1. Design Tip Elevations are controlled by: (a) Compression, (b) Tension, and (c) Lateral Load.
2. The Specified Tip Elevation shall not be raised above the Design Tip Elevations for Compression Load, Tension Load, and Lateral Load.

LEGEND:

- XXX.XX — Indicates Bottom of Footing Elevation
- Indicates Existing Structure
- Indicates New Construction
- Indicates Retaining Wall
- Indicates HP 10x42 Pile
- Indicates HP 10x42 Pile (Battered 3:1)

NOTES:

1. For Location of Existing Utilities, see "Road Plans."

BENCHMARKS:

Designation: 1L-54-82 Elev = 153.171
Described by OCS 2002 - Found 3¾" OCS Aluminum Benchmark Disk Stamped "1L-54-82", set in the Top of a 6 in. by 6 in. Concrete Post. Monument is located along the Westerly Levee of the Santa Ana River, 0.25 Miles Northerly along Levee from the Centerline of Orangewood Avenue, 200 ft. Northeasterly of the Easterly Leg of the Angheim Angels 200 ft. tall sign, 69 ft. Westerly of the Centerline of the Bike Trail and 1.5 ft. Westerly of a Steel OCS Witness Post. Monument is set 0.3 below the Ground.

Designation: 2G-25-70 Elev = 275.872
Described by OCS 2003 - Found 3¾" OCS Aluminum Benchmark Disk Stamped "2G-25-70", set in the Southeasterly Corner of a 4 ft. by 6 ft. Concrete Catch Basin. Monument is Located in the Northwesterly Corner of the Intersection of Yorba Linda Boulevard and Deerpark Drive, 75 ft. Westerly of the Centerline of Deerpark and 46 ft. Northerly of the Centerline of Yorba Linda. Monument is set Level with the Sidewalk.

BASIS OF COORDINATES:

Bearings and Coordinates as shown hereon are in terms of the California Coordinate System of 1983 (CCS83, Epoch 1991.35), Zone 6; based locally upon the following Control Stations as published by the County of Orange:

Name	Northing (ft.)-GRID	Easting (ft.)-GRID
2001 OCS 3282	2247998.84	6069149.29
2017 OCS 0560	2260355.81	6065880.43
2023 OCS 0111	2270990.23	6066809.18

All Coordinates and Distances are in terms of the U.S. Survey Foot, 1 meter = 39.37/12 feet

DIST	COUNTY	ROUTE	POST MILES TOTAL PROJECT	SHEET No	TOTAL
12	Ora	57	16.2/18.6	468	960

REGISTERED CIVIL ENGINEER — DATE 06/17/09

12-14-09
PLANS APPROVAL DATE

REGISTERED PROFESSIONAL ENGINEER — Chad W Harden — No. 67648 — Exp. 06/30/11 — CIVIL — STATE OF CALIFORNIA

The State of California or its officers or agents shall not be responsible for the accuracy or completeness of electronic copies of this plan sheet.

OCTA
550 S MAIN STREET
ORANGE, CA 92868

RBF CONSULTING
14725 ALTON PKWY
IRVINE, CA 92618

GEOTECHNICAL PROFESSIONAL — APPROVAL DATE 6-17-09

NOTE:
THE CONTRACTOR SHALL VERIFY ALL CONTROLLING FIELD DIMENSIONS BEFORE ORDERING OR FABRICATING ANY MATERIAL.

DESIGN OVERSIGHT Jon Hamaguchi
6-24-09
SIGN OFF DATE

SCALE:	VERT.DATUM NAVD 88	HORZ.DATUM CCS83	DESIGN	BY Chad Harden	CHECKED	PREPARED FOR THE STATE OF CALIFORNIA DEPARTMENT OF TRANSPORTATION	Chad W. Harden, PROJECT ENGINEER
PHOTOGRAMMETRY AS OF: 12-02-2007	ALIGNMENT TIES		DETAILS	BY Gerald Fetters	CHECKED Chad Harden		
SURVEYED BY B. Madigan	DRAFTED BY B. Zeman		QUANTITIES	BY	CHECKED		
FIELD CHECKED BY B. Cox	CHECKED BY T. Rai						

FOUNDATION PLAN SHEET (ENGLISH) (REV. 2-25-05)

ORIGINAL SCALE IN INCHES FOR REDUCED PLANS 0 1 2 3

CU 12
EA 0F0311

FILE => 55e-462-g-rwftg01.dgn

BRIDGE NO. 55E0078
POST MILE 16.0

RETAINING WALL NO 462
FOUNDATION PLAN

DISREGARD PRINTS BEARING EARLIER REVISION DATES →

REVISION DATES (PRELIMINARY STAGE ONLY): 1/4/08 | 10/24/08 | 2/13/09 | 4/6/09

SHEET 6 OF 83

USERNAME => ttmaguye DATE PLOTTED => 17-DEC-2009 TIME PLOTTED => 08:04

DIST	COUNTY	ROUTE	POST MILES TOTAL PROJECT	SHEET No	TOTAL SHEETS
12	Ora	57	16.2/18.6	469	960

REGISTERED CIVIL ENGINEER — 06/17/09 DATE

12-14-09
PLANS APPROVAL DATE

REGISTERED PROFESSIONAL ENGINEER — Chad W Harden — No. 67648 — Exp. 06/30/11 — CIVIL — STATE OF CALIFORNIA

The State of California or its officers or agents shall not be responsible for the accuracy or completeness of electronic copies of this plan sheet.

OCTA
550 S MAIN STREET
ORANGE, CA 92868

RBF CONSULTING
14725 ALTON PKWY
IRVINE, CA 92618

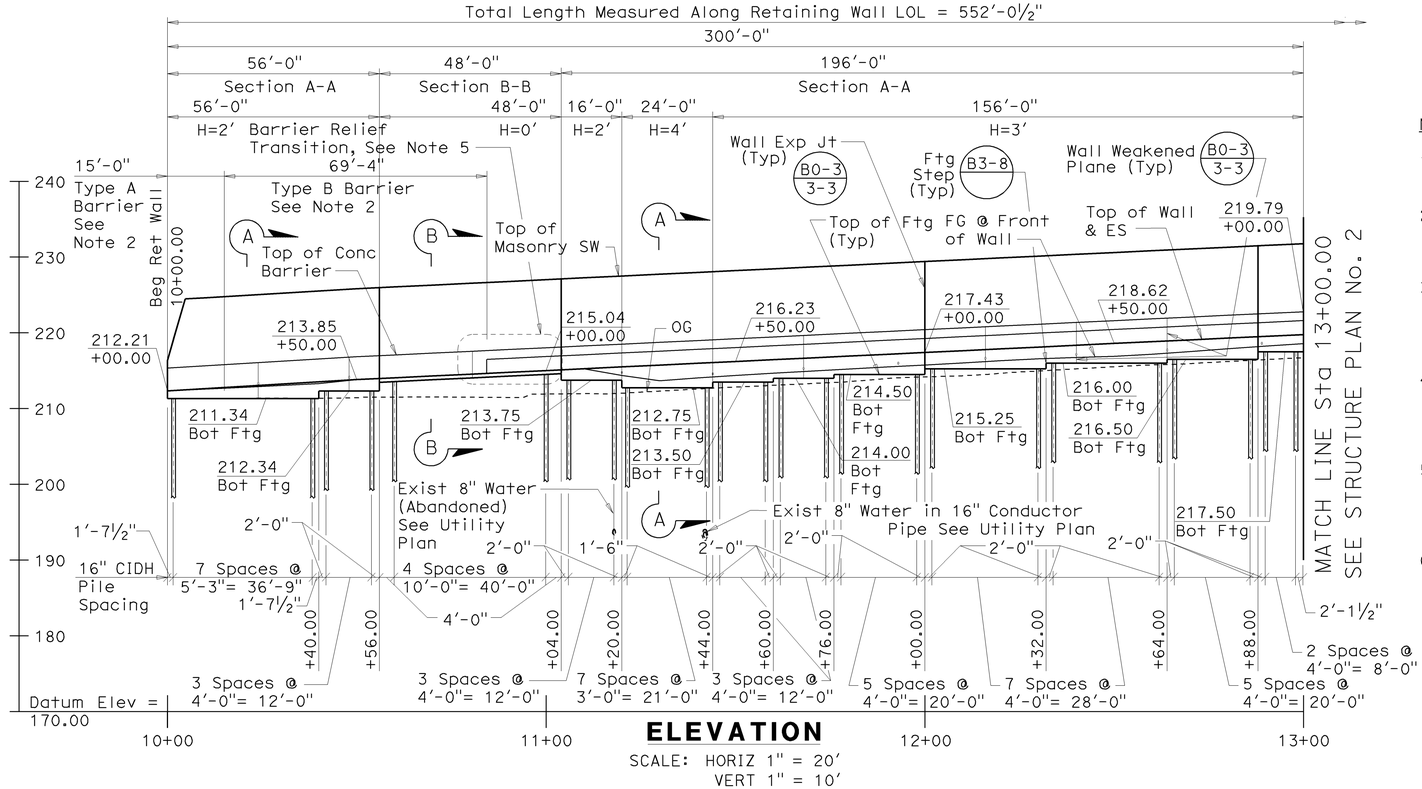

ELEVATION
SCALE: HORIZ 1" = 20'
VERT 1" = 10'

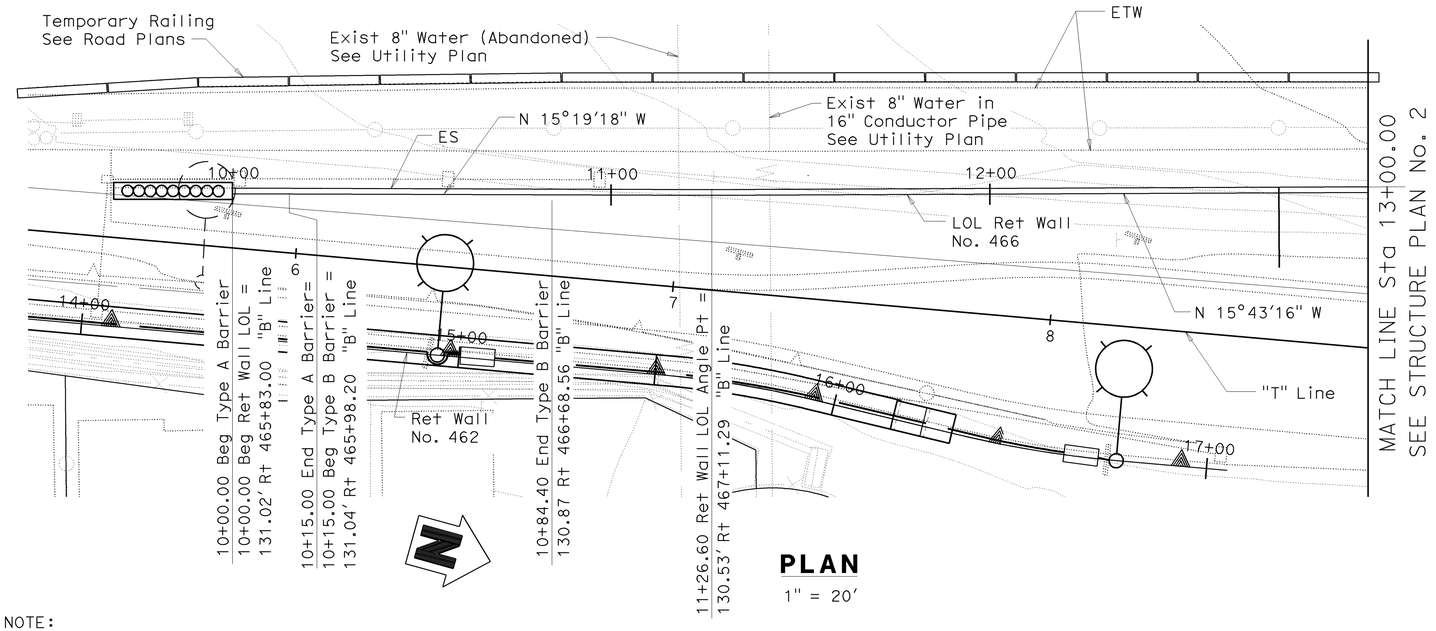

PLAN
1" = 20'

NOTES:

1. This Plan Accurate for Sound Wall and Retaining Wall Work Only.
2. For Specified Barrier, See "RETAINING WALL DETAILS - TYPE A AND TYPE B BARRIER DETAILS" Sheet.
3. For Sound Wall Texture and Color, See "SOUNDWALL - MASONRY BLOCK WITH BARRIER ON RETAINING WALL - DETAILS No. 2" Sheet
4. For Excavation and Backfill Details, See "RETAINING WALL DETAILS - LIMITS OF PAYMENT FOR EXCAVATION AND BACKFILL" Sheet.
5. For Barrier Relief Transition Detail, See "SOUND WALL ON RETAINING WALL DETAILS - MISCELLANEOUS DETAILS No. 1" Sheet.
6. For Barrier Relief Detail, See "SOUND WALL ON RETAINING WALL DETAILS - MISCELLANEOUS DETAILS No. 1" Sheet.

RETAINING WALL NO. 466 — BRIDGE NO 55E0079

QUANTITIES		
STRUCTURE EXCAVATION (RETAINING WALL)	147	CY
STRUCTURE BACKFILL (RETAINING WALL)	156	CY
16" CAST-IN-DRILLED-HOLE CONCRETE PILING	1,544	LF
STRUCTURAL CONCRETE, RETAINING WALL	32	CY
FRACTURED RIB TEXTURE	244	SQFT
SOUND WALL (MASONRY BLOCK)	4,963	SQFT
BAR REINFORCING STEEL (RETAINING WALL)	3,994	LB
CONCRETE BARRIER (TYPE 736A MODIFIED)	32	LF
CONCRETE BARRIER (TYPE 736SV MODIFIED)	296	LF
CONCRETE BARRIER (TYPE 736S MODIFIED)	140	LF
CONCRETE BARRIER (TYPE A)	15	LF
CONCRETE BARRIER (TYPE B)	69	LF

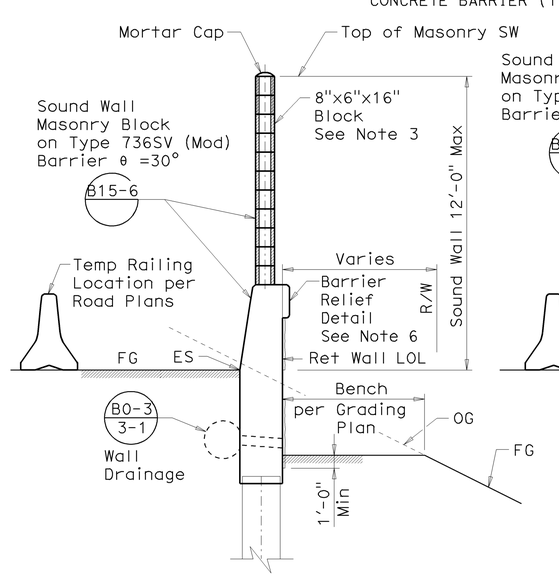

SECTION A-A
No Scale

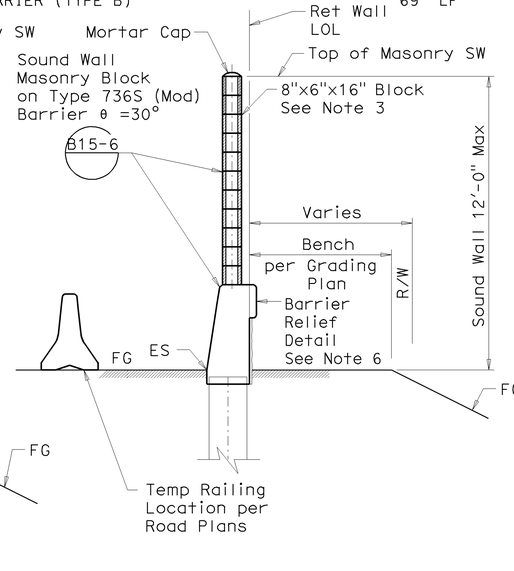

SECTION B-B
No Scale

NOTE:
THE CONTRACTOR SHALL VERIFY ALL CONTROLLING FIELD DIMENSIONS BEFORE ORDERING OR FABRICATING ANY MATERIAL.

Jon Hamaguchi
DESIGN OVERSIGHT
6-24-09
SIGN OFF DATE

DESIGN	BY Chad Harden	CHECKED Kevin Burke	LFD DESIGN	LIVE LOADING: 2 FOOT SURCHARGE	
DETAILS	BY Gerald Fetters	CHECKED Chad Harden	LAYOUT	BY Gerald Fetters	CHECKED Chad Harden
QUANTITIES	BY Kelly Gillis	CHECKED Chad Harden	SPECIFICATIONS	BY S. Sheikh	PLANS AND SPECS COMPARED S. Sheikh

PREPARED FOR THE STATE OF CALIFORNIA DEPARTMENT OF TRANSPORTATION

Chad W. Harden
PROJECT ENGINEER

CU 12
EA 0F0311

BRIDGE NO. 55E0079
POST MILE 16.1

RETAINING WALL No. 466
STRUCTURE PLAN No. 1

DESIGN GENERAL PLAN SHEET (ENGLISH) (REV. 2/25/05)

ORIGINAL SCALE IN INCHES FOR REDUCED PLANS 0 1 2 3

DISREGARD PRINTS BEARING EARLIER REVISION DATES →

REVISION DATES (PRELIMINARY STAGE ONLY): 7/1/08 | 10/24/08 | 2/13/09 | 4/6/09 | 6/17/09

SHEET 7 OF 83

FILE => 55e-466-g-rw_lo01.dgn

USERNAME => tmmikesl DATE PLOTTED => 23-DEC-2009 TIME PLOTTED => 14:02

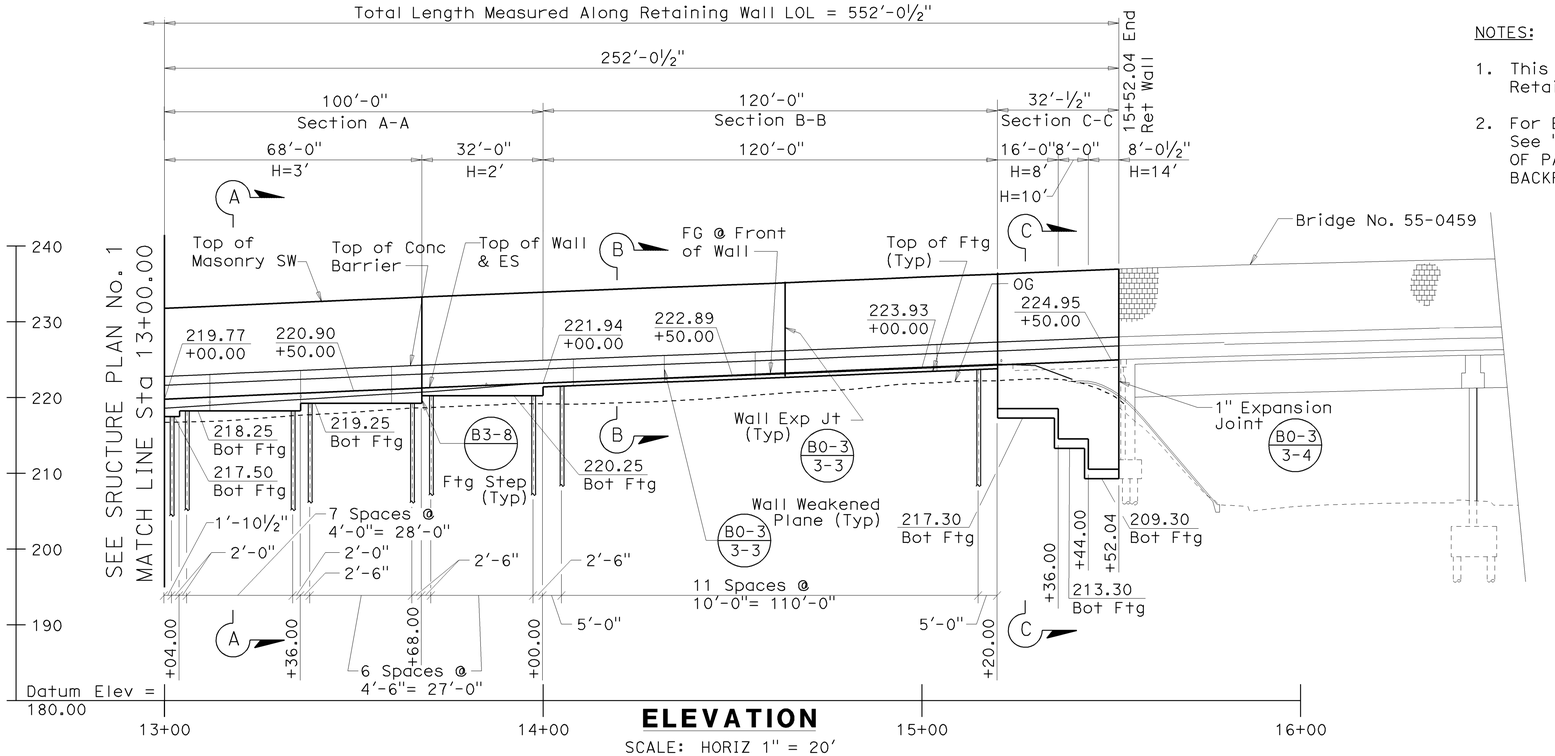

ELEVATION

SCALE: HORIZ 1" = 20'
VERT 1" = 10'

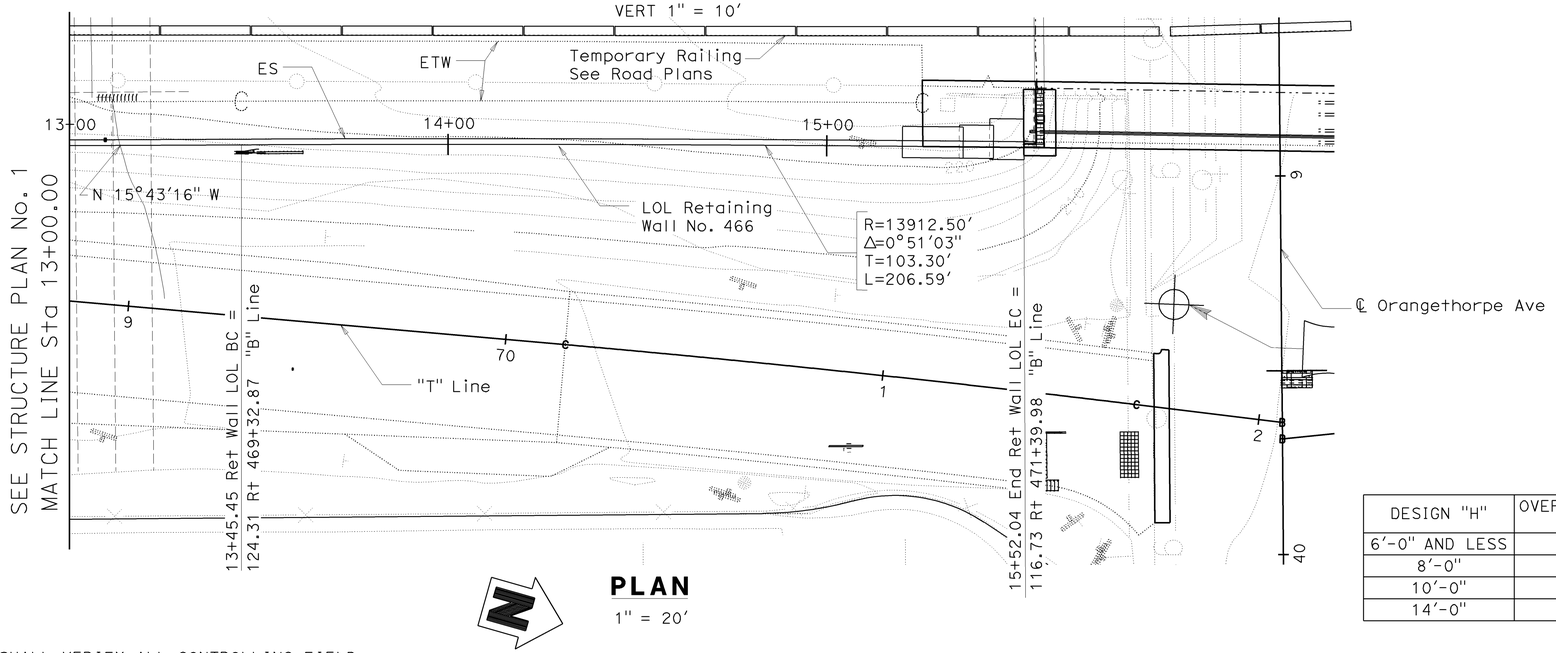

PLAN

1" = 20'

NOTES:

1. This Plan Accurate for Sound Wall and Retaining Wall Work Only.
2. For Excavation and Backfill Details, See "RETAINING WALL DETAILS - LIMITS OF PAYMENT FOR EXCAVATION AND BACKFILL" Sheet.

DIST	COUNTY	ROUTE	POST MILES TOTAL PROJECT	SHEET No	TOTAL SHEETS
12	Ora	57	16.2/18.6	470	960

REGISTERED CIVIL ENGINEER — 06/17/09 DATE

12-14-09
PLANS APPROVAL DATE

REGISTERED PROFESSIONAL ENGINEER — Chad W Harden — No. 67648 — Exp. 06/30/11 — CIVIL — STATE OF CALIFORNIA

The State of California or its officers or agents shall not be responsible for the accuracy or completeness of electronic copies of this plan sheet.

OCTA
550 S MAIN STREET
ORANGE, CA 92868

RBF CONSULTING
14725 ALTON PKWY
IRVINE, CA 92618

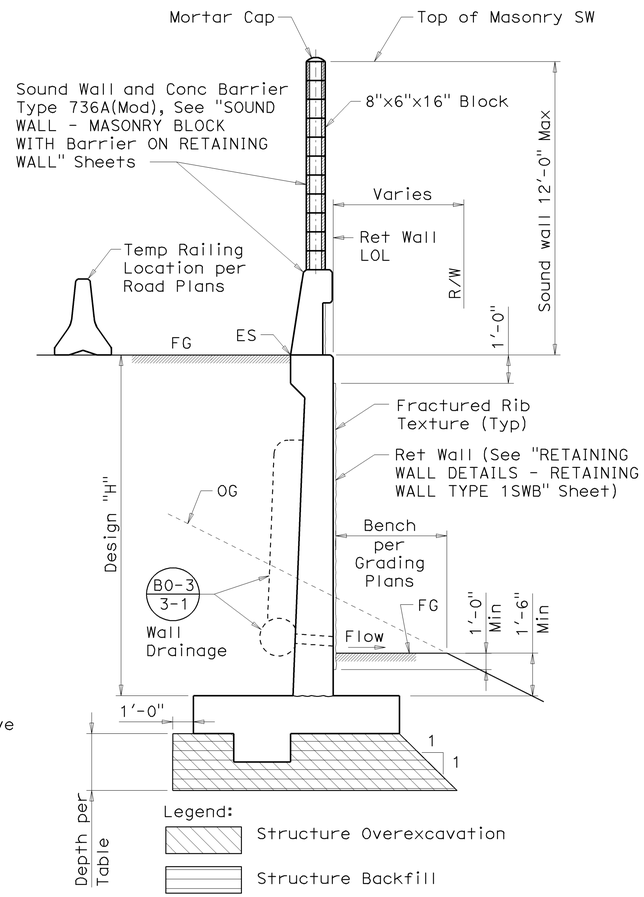

DESIGN "H"	OVER EXCAVATION DEPTH
6'-0" AND LESS	1'-0"
8'-0"	1'-6"
10'-0"	2'-0"
14'-0"	3'-0"

SECTION C-C

No Scale

NOTE:
THE CONTRACTOR SHALL VERIFY ALL CONTROLLING FIELD DIMENSIONS BEFORE ORDERING OR FABRICATING ANY MATERIAL.

Jon Hamaguchi
DESIGN OVERSIGHT — Jon Hamaguchi
6-24-09
SIGN OFF DATE

DESIGN	BY Chad Harden	CHECKED Kevin Burke	LFD DESIGN	LIVE LOADING: 2 FOOT SURCHARGE	
DETAILS	BY Gerald Fetters	CHECKED Chad Harden	LAYOUT	BY Gerald Fetters	CHECKED Chad Harden
QUANTITIES	BY Kelly Gillis	CHECKED Chad Harden	SPECIFICATIONS	BY S. Sheikh	PLANS AND SPECS COMPARED S. Sheikh

PREPARED FOR THE STATE OF CALIFORNIA DEPARTMENT OF TRANSPORTATION

Chad W. Harden
PROJECT ENGINEER

CU 12
EA 0F0311

BRIDGE NO.	RETAINING WALL No. 466
55E0079	
POST MILE	STRUCTURE PLAN No. 2
16.1	

DISREGARD PRINTS BEARING EARLIER REVISION DATES →

REVISION DATES (PRELIMINARY STAGE ONLY): 7/31/08 | 10/24/08 | 2/13/09 | 4/6/09 | 6/17/09

SHEET 8 OF 83

DESIGN GENERAL PLAN SHEET (ENGLISH) (REV. 2/25/05)

ORIGINAL SCALE IN INCHES FOR REDUCED PLANS 0 1 2 3

FILE => 55e-466-g-rw_lo02.dgn

USERNAME = trmnguye DATE PLOTTED => 17-DEC-2009 TIME PLOTTED => 08:04

DIST	COUNTY	ROUTE	POST MILES TOTAL PROJECT	SHEET No	TOTAL SHEETS
12	Ora	57	16.2/18.6	471	960

REGISTERED CIVIL ENGINEER — 06/17/09 DATE

12-14-09
PLANS APPROVAL DATE

REGISTERED PROFESSIONAL ENGINEER — Chad W Harden — No. 67648 — Exp. 06/30/11 — CIVIL — STATE OF CALIFORNIA

The State of California or its officers or agents shall not be responsible for the accuracy or completeness of electronic copies of this plan sheet.

OCTA
550 S MAIN STREET
ORANGE, CA 92868

RBF CONSULTING
14725 ALTON PKWY
IRVINE, CA 92618

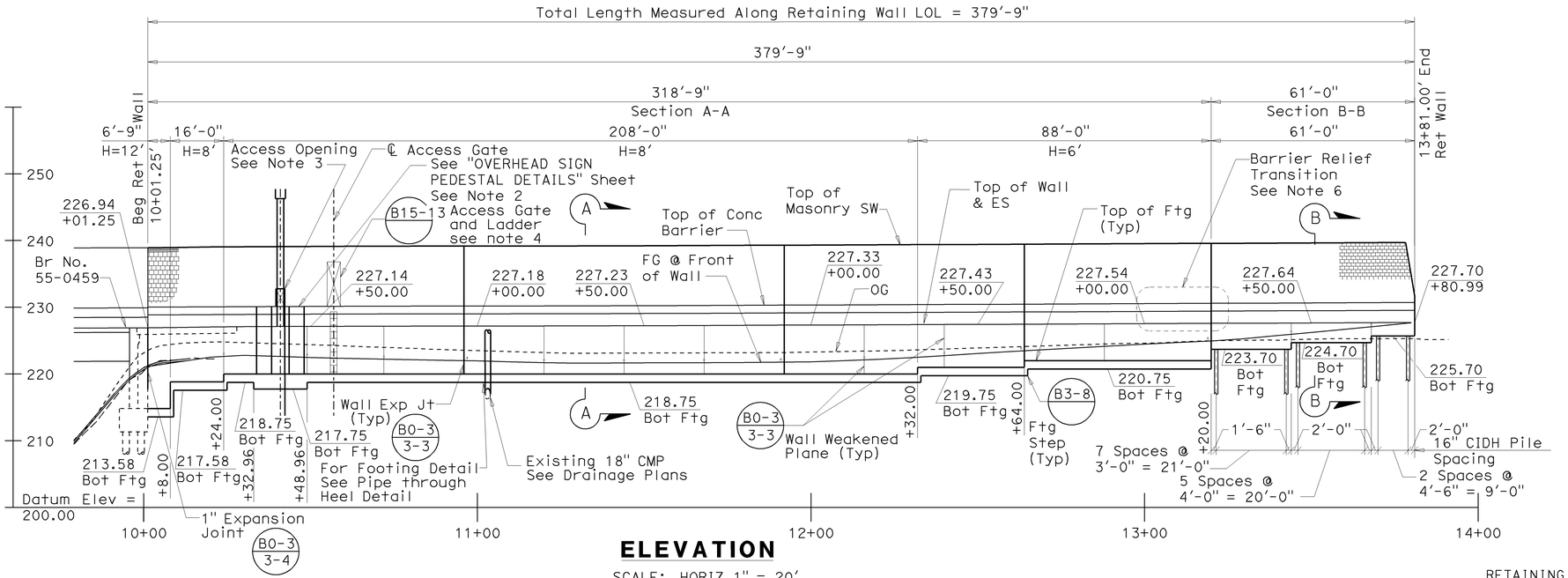

ELEVATION

SCALE: HORIZ 1" = 20'
VERT 1" = 10'

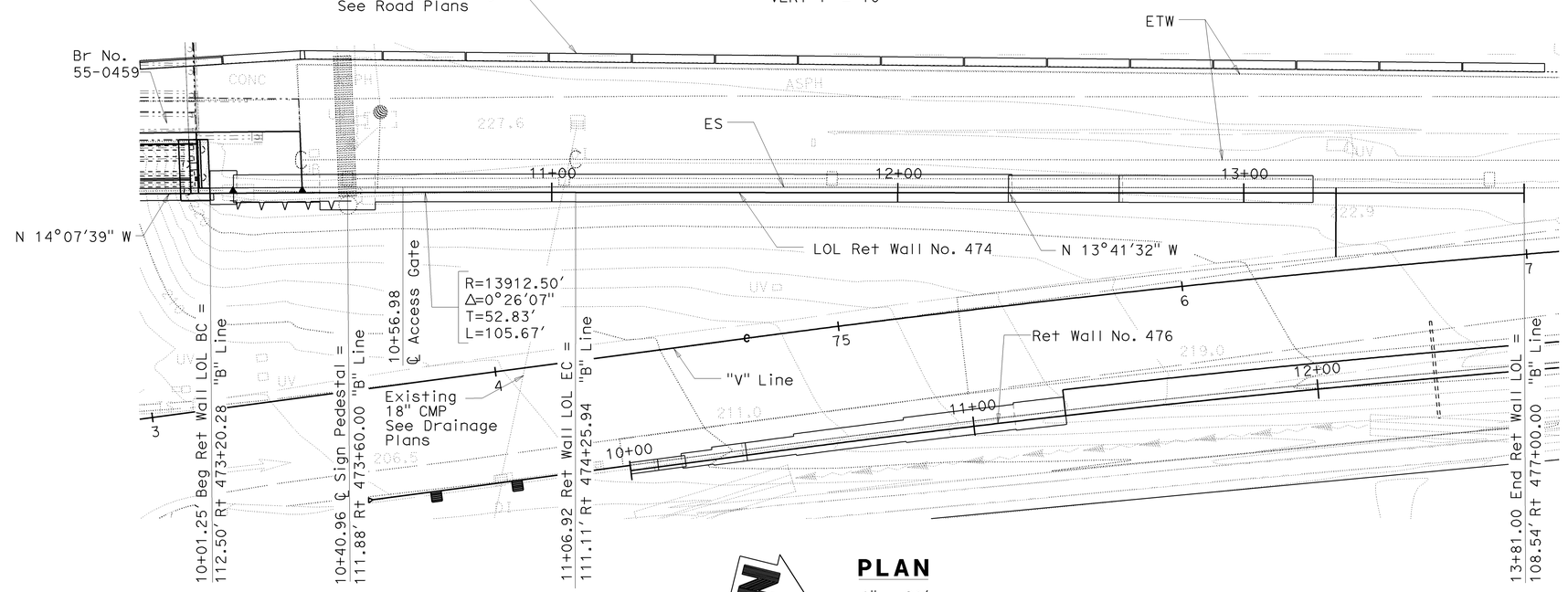

PLAN

1" = 20'

NOTE:
THE CONTRACTOR SHALL VERIFY ALL CONTROLLING FIELD DIMENSIONS BEFORE ORDERING OR FABRICATING ANY MATERIAL.

RETAINING WALL NO. 474 — BRIDGE NO 55E0080

QUANTITIES

STRUCTURE EXCAVATION (RETAINING WALL)	713	CY
STRUCTURE BACKFILL (RETAINING WALL)	535	CY
16" CAST-IN-DRILLED-HOLE CONCRETE PILING	274	LF
STRUCTURAL CONCRETE, RETAINING WALL	265	CY
FRACTURED RIB TEXTURE	1,731	SQFT
SOUND WALL (MASONRY BLOCK)	3,412	SQFT
BAR REINFORCING STEL (RETAINING WALL)	29,429	LB
CONCRETE BARRIER (TYPE 736A MODIFIED)	319	LF
CONCRETE BARRIER (TYPE 736SV MODIFIED)	61	LF

NOTES:

1. This Plan Accurate for Sound Wall and Retaining Wall Work Only.
2. For Sign Location and Details, See Roadway Plans, Sign Plans, and Sign Detail Sheets.
3. For Access Opening and Cover Plate, See "SOUND WALL - MASONRY BLOCK WITH BARRIER ON RETAINING WALL - DETAILS No. 3" Sheet.
4. For Barrier Modification of Access Gate, See Barrier at Access Gate Detail on "SOUND WALL - MASONRY BLOCK WITH BARRIER ON RETAINING WALL - DETAILS No. 3" Sheet.
5. For Sections A-A and B-B, See "RETAINING WALL No. 474 - STRUCTURE PLAN No.3" Sheet.
6. For Barrier Relief Transition Detail, See "SOUND WALL DETAILS - MISCELLANEOUS DETAILS No. 1" Sheet.

	BY	CHECKED				
DESIGN	Chad Harden	Kevin Burke	LFD DESIGN	LIVE LOADING: 2 FOOT SURCHARGE		
DETAILS	Gerald Fetters	Chad Harden	LAYOUT	Gerald Fetters	Chad Harden	
QUANTITIES	Kelly Gillis	Chad Harden	SPECIFICATIONS	S. Sheikh	PLANS AND SPECS COMPARED S. Sheikh	

Jon Hamaguchi
DESIGN OVERSIGHT Jon Hamaguchi
6-24-09
SIGN OFF DATE

PREPARED FOR THE STATE OF CALIFORNIA DEPARTMENT OF TRANSPORTATION

Chad W. Harden
PROJECT ENGINEER

CU 12
EA 0F0311

BRIDGE NO. 55E0080
POST MILE 16.2

RETAINING WALL No. 474
STRUCTURE PLAN No. 1

DESIGN GENERAL PLAN SHEET (ENGLISH) (REV. 2/25/05)

ORIGINAL SCALE IN INCHES FOR REDUCED PLANS 0 1 2 3

DISREGARD PRINTS BEARING EARLIER REVISION DATES →

REVISION DATES (PRELIMINARY STAGE ONLY): 7/9/08 | 10/24/08 | 2/13/09 | 4/6/09 | 6/17/09

SHEET 9 OF 83

FILE => 55e-474-g-rw_lo01.dgn

USERNAME = trmoguye DATE PLOTTED => 17-DEC-2009 TIME PLOTTED => 08:05

DIST	COUNTY	ROUTE	POST MILES TOTAL PROJECT	SHEET No	TOTAL SHEETS
12	Ora	57	16.2/18.6	472	960

REGISTERED CIVIL ENGINEER — DATE 06/17/09

12-14-09
PLANS APPROVAL DATE

REGISTERED PROFESSIONAL ENGINEER — Chad W Harden — No. 67648 — Exp. 06/30/11 — CIVIL — STATE OF CALIFORNIA

The State of California or its officers or agents shall not be responsible for the accuracy or completeness of electronic copies of this plan sheet.

OCTA
550 S MAIN STREET
ORANGE, CA 92868

RBF CONSULTING
14725 ALTON PKWY
IRVINE, CA 92618

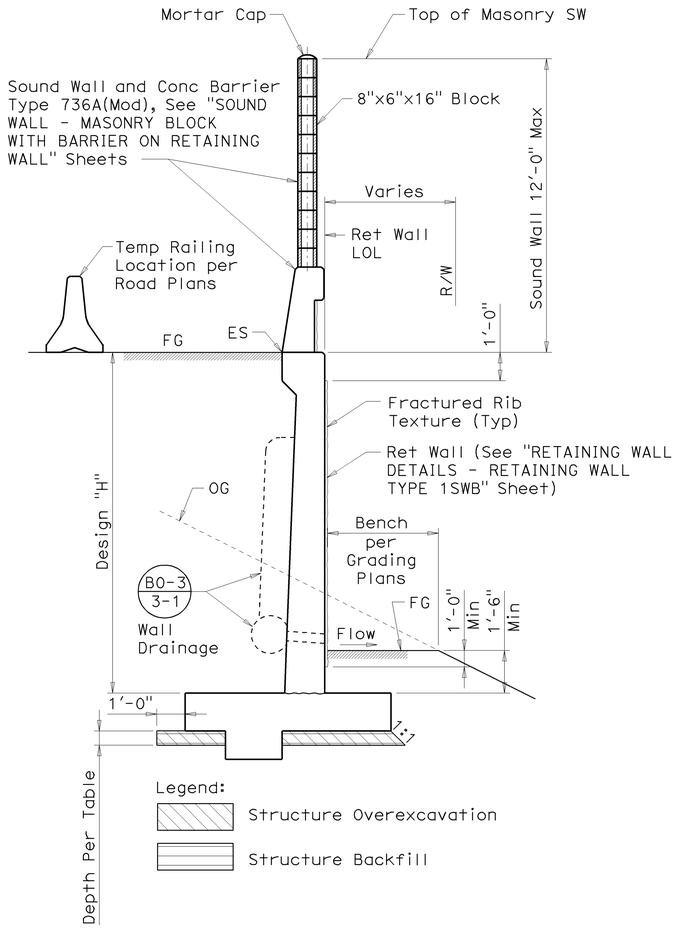

SECTION A-A

No Scale

DESIGN "H"	OVER EXCAVATION DEPTH
6'	6"
8'	6"
12'	1'-0"

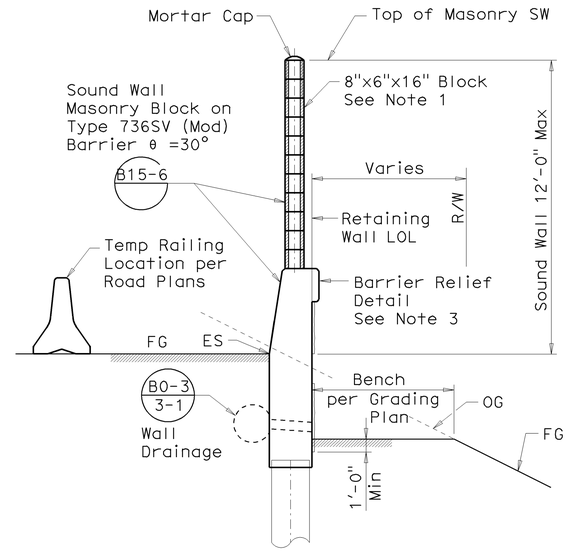

SECTION B-B

No Scale

NOTES:

1. For Sound Wall Texture and Color See "SOUND WALL - MASONRY BLOCK WITH BARRIER ON RETAINING WALL - DETAILS No. 2" Sheet.
2. For Excavation and Backfill Details See "RETAINING WALL DETAILS - LIMITS OF PAYMENT FOR EXCAVATION AND BACKFILL" Sheet.
3. For Barrier Relief Detail, See "SOUND WALL ON RETAINING WALL DETAILS - MISCELLANEOUS DETAILS No. 1" Sheet.

NOTE:
THE CONTRACTOR SHALL VERIFY ALL CONTROLLING FIELD DIMENSIONS BEFORE ORDERING OR FABRICATING ANY MATERIAL.

Jon Hamaguchi — DESIGN OVERSIGHT — 6-24-09 SIGN OFF DATE	DESIGN	BY Chad Harden	CHECKED Kevin Burke	LFD DESIGN	LIVE LOADING: 2 FOOT SURCHARGE	
	DETAILS	BY Gerald Fetters	CHECKED Chad Harden	LAYOUT	BY Gerald Fetters	CHECKED Chad Harden
	QUANTITIES	BY Kelly Gillis	CHECKED Chad Harden	SPECIFICATIONS	BY S. Sheikh	PLANS AND SPECS COMPARED S. Sheikh

PREPARED FOR THE STATE OF CALIFORNIA DEPARTMENT OF TRANSPORTATION

Chad W. Harden — PROJECT ENGINEER

BRIDGE NO.	RETAINING WALL No. 474
55E0080	
POST MILE	STRUCTURE PLAN No. 2
16.2	

DESIGN GENERAL PLAN SHEET (ENGLISH) (REV. 2/25/05)

ORIGINAL SCALE IN INCHES FOR REDUCED PLANS 0 1 2 3

CU 12
EA 0F0311

DISREGARD PRINTS BEARING EARLIER REVISION DATES →

REVISION DATES (PRELIMINARY STAGE ONLY): 7/31/08 | 10/24/08 | 2/13/09 | 4/16/09 | 6/17/09

SHEET 10 OF 83

FILE => 55e-474-g-rw_lo02.dgn

USERNAME = trmnguye DATE PLOTTED => 17-DEC-2009 TIME PLOTTED => 08:05

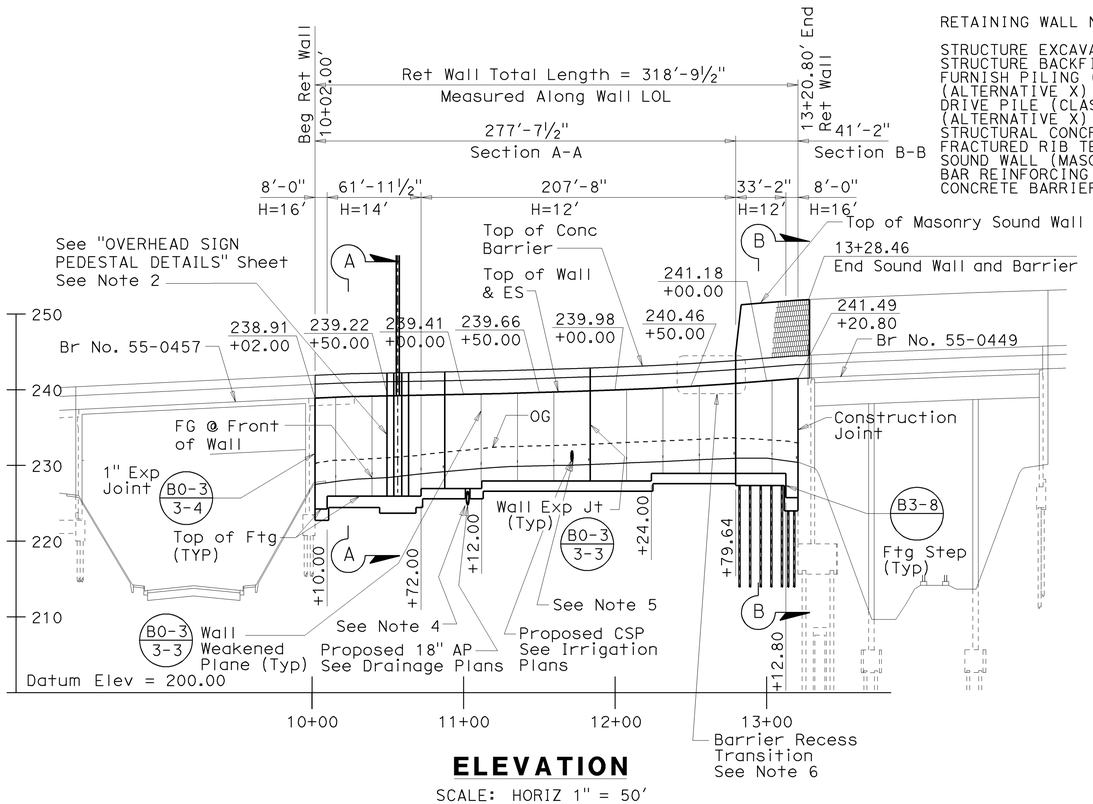

ELEVATION

SCALE: HORIZ 1" = 50'
VERT 1" = 10'

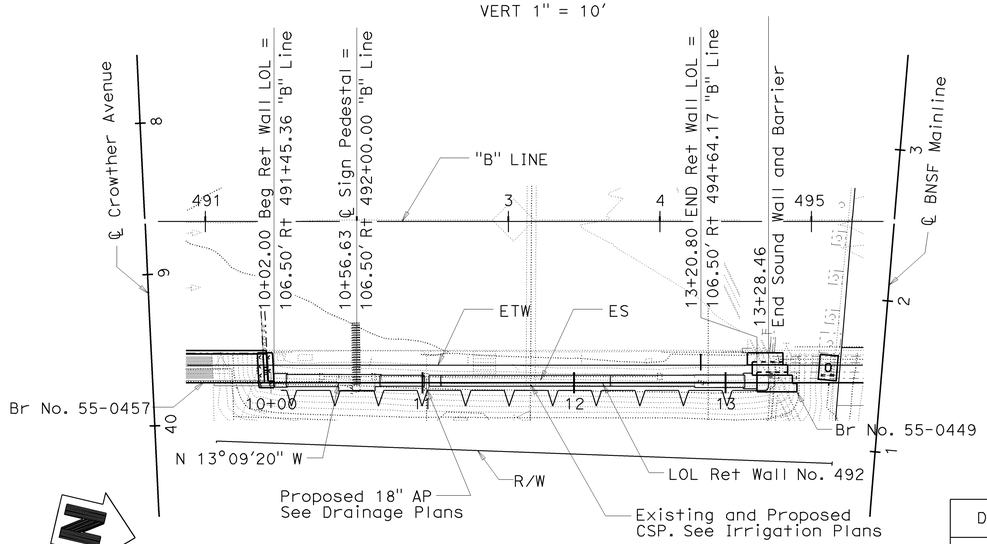

PLAN

1" = 50'

RETAINING WALL NO. 492

QUANTITIES		
STRUCTURE EXCAVATION (RETAINING WALL)	1,298	CY
STRUCTURE BACKFILL (RETAINING WALL)	1,246	CY
FURNISH PILING (CLASS 90) (ALTERNATIVE X)	662	LF
DRIVE PILE (CLASS 90) (ALTERNATIVE X)	12	EA
STRUCTURAL CONCRETE, RETAINING WALL	374	CY
FRACTURED RIB TEXTURE	3,167	SQFT
SOUND WALL (MASONRY BLOCK)	298	SQFT
BAR REINFORCING STEEL (RETAINING WALL)	34,819	LB
CONCRETE BARRIER (TYPE 736A MODIFIED)	319	LF

BRIDGE NO 55E0082

NOTES:

1. This Plan Accurate for Sound Wall and Retaining Wall Work Only.
2. For Sign Location and Details, See Sign Plans and Sign Detail Sheets.
3. For Excavation and Backfill Details, See "RETAINING WALL DETAILS - LIMITS OF PAYMENT FOR EXCAVATION AND BACKFILL" Sheet.
4. For Utility Bridge Over Detail, See "SOUND WALL ON RETAINING WALL DETAILS-MISCELLANEOUS DETAILS No. 2" Sheet.
5. For Pipe Through Wall Detail, See "SOUND WALL ON RETAINING WALL DETAILS-MISCELLANEOUS DETAILS No. 3" Sheet.
6. For Barrier Recess Transition Detail, See "SOUND WALL ON RETAINING WALL DETAILS - MISCELLANEOUS DETAILS No. 1" Sheet.

DIST	COUNTY	ROUTE	POST MILES TOTAL PROJECT	SHEET No	TOTAL SHEETS
12	Ora	57	16.2/18.6	473	960

REGISTERED CIVIL ENGINEER — 06/17/09 DATE

12-14-09
PLANS APPROVAL DATE

REGISTERED PROFESSIONAL ENGINEER — Chad W Harden No. 67648 Exp. 06/30/11 CIVIL — STATE OF CALIFORNIA

The State of California or its officers or agents shall not be responsible for the accuracy or completeness of electronic copies of this plan sheet.

OCTA
550 S MAIN STREET
ORANGE, CA 92868

RBF CONSULTING
14725 ALTON PKWY
IRVINE, CA 92618

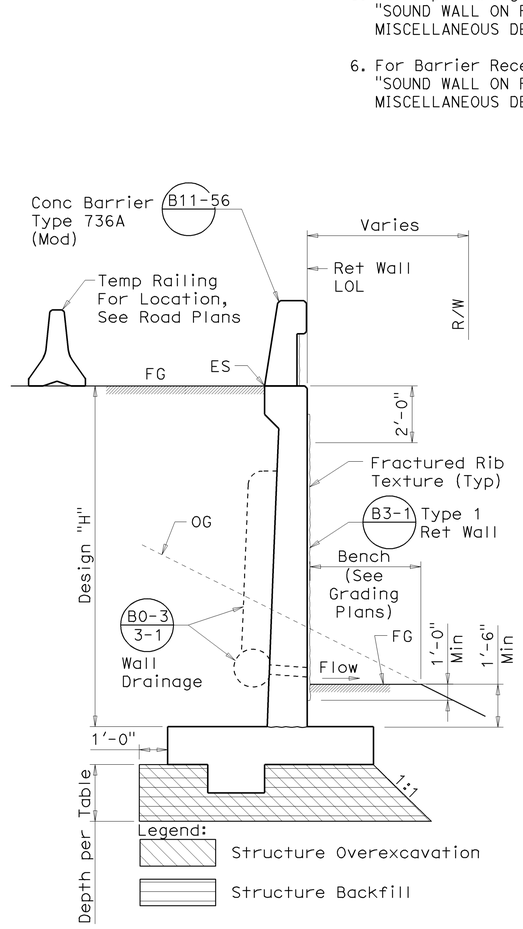

DESIGN "H"	OVER EXCAVATION DEPTH
12'-0"	3'-0"
14'-0"	4'-0"
16'-0"	4'-6"

SECTION A-A

NO SCALE

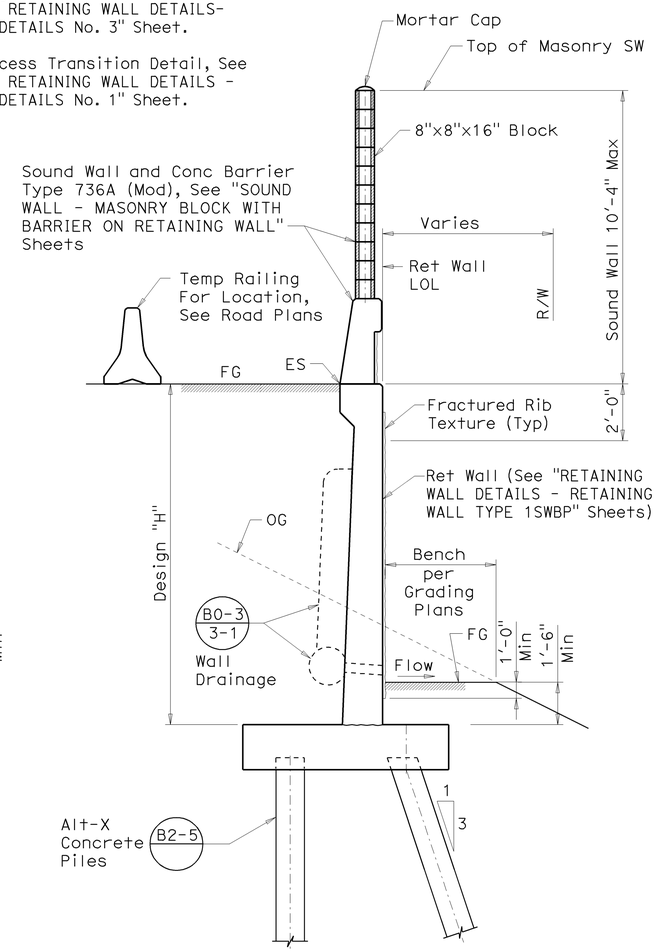

SECTION B-B

No Scale

NOTE:
THE CONTRACTOR SHALL VERIFY ALL CONTROLLING FIELD DIMENSIONS BEFORE ORDERING OR FABRICATING ANY MATERIAL.

DESIGN OVERSIGHT Jon Hamaguchi	DESIGN	BY Chad Harden	CHECKED Kevin Burke	LFD DESIGN	LIVE LOADING: 2 FOOT SURCHARGE		
6-24-09 SIGN OFF DATE	DETAILS	BY Gerald Fetters	CHECKED Chad Harden	LAYOUT	BY Gerald Fetters	CHECKED Chad Harden	
	QUANTITIES	BY Kelly Gillis	CHECKED Chad Harden	SPECIFICATIONS	BY S. Sheikh	PLANS AND SPECS COMPARED S. Sheikh	

PREPARED FOR THE STATE OF CALIFORNIA DEPARTMENT OF TRANSPORTATION

Chad W. Harden
PROJECT ENGINEER

BRIDGE NO. 55E0082
POST MILE 16.6

RETAINING WALL NO 492
GENERAL PLAN

DESIGN GENERAL PLAN SHEET (ENGLISH) (REV. 2/25/05)

ORIGINAL SCALE IN INCHES FOR REDUCED PLANS 0 1 2 3

CU 12
EA 0F0311

DISREGARD PRINTS BEARING EARLIER REVISION DATES →

REVISION DATES (PRELIMINARY STAGE ONLY): 1/4/08 | 10/24/08 | 2/13/09 | 4/6/09 | 6/17/09

SHEET 11 OF 83

FILE => 55e-492-g-rw_lo01.dgn

USERNAME => rtrmguye DATE PLOTTED => 17-DEC-2009 TIME PLOTTED => 08:05

DIST	COUNTY	ROUTE	POST MILES TOTAL PROJECT	SHEET No	TOTAL
12	Ora	57	16.2/18.6	474	960

REGISTERED CIVIL ENGINEER — DATE 06/17/09

12-14-09
PLANS APPROVAL DATE

REGISTERED PROFESSIONAL ENGINEER — Chad W Harden — No. 67648 — Exp. 06/30/11 — CIVIL — STATE OF CALIFORNIA

The State of California or its officers or agents shall not be responsible for the accuracy or completeness of electronic copies of this plan sheet.

OCTA
550 S MAIN STREET
ORANGE, CA 92868

RBF CONSULTING
14725 ALTON PKWY
IRVINE, CA 92618

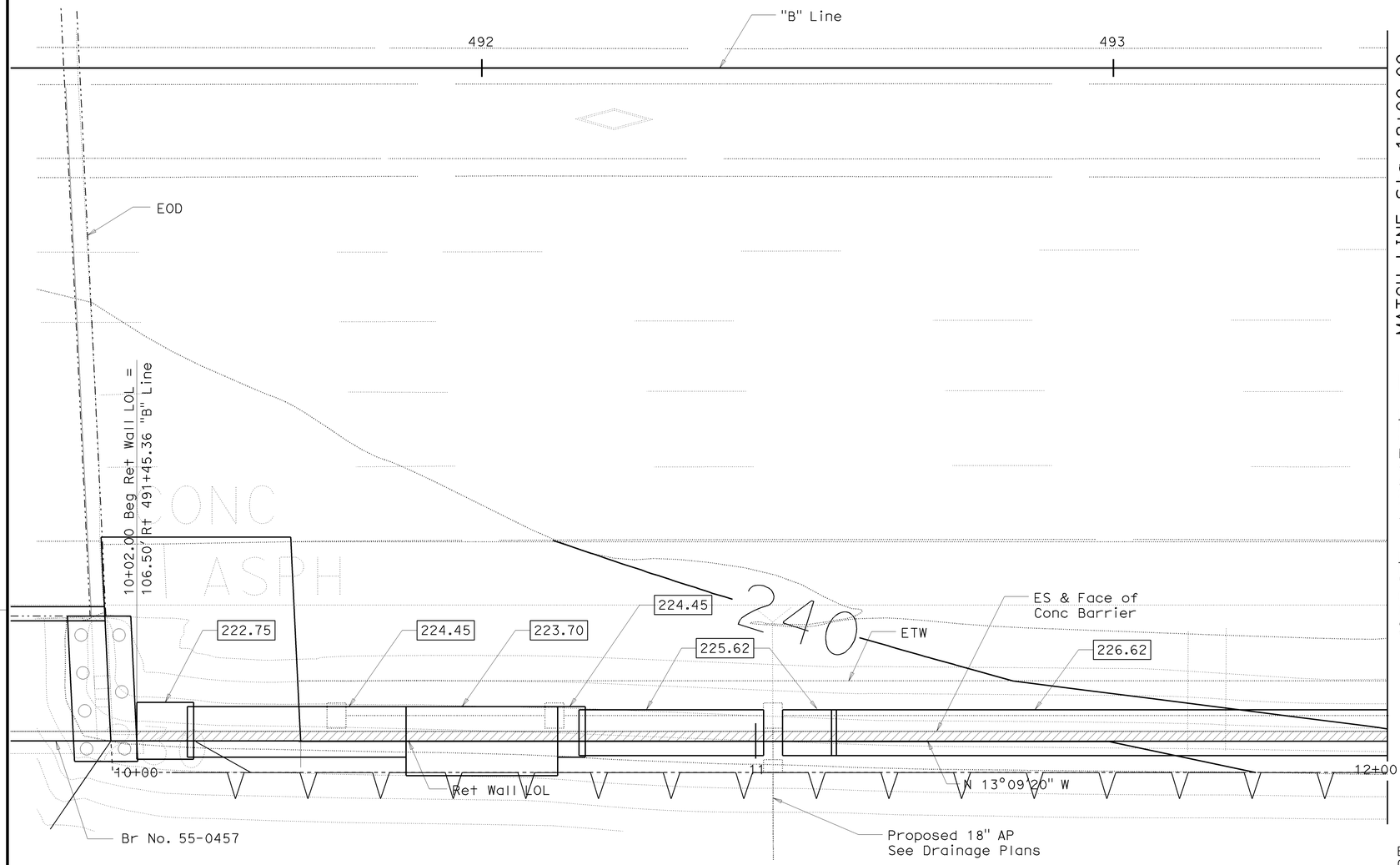

MATCH LINE Sta 12+00.00

FOUNDATION PLAN

1" = 10'

BENCHMARKS:

Designation: 1L-54-82 Elev = 153.171
Described by OCS 2002 - Found 3¾" OCS Aluminum Benchmark Disk Stamped "1L-54-82", set in the Top of a 6 in. by 6 in. Concrete Post. Monument is located along the Westerly Levee of the Santa Ana River, 0.25 Miles Northerly along Levee from the Centerline of Orangewood Avenue, 200 ft. Northeasterly of the Easterly Leg of the Anaheim Angels 200 ft. tall sign, 69 ft. Westerly of the Centerline of the Bike Trail and 1.5 ft. Westerly of a Steel OCS Witness Post. Monument is set 0.3 below the Ground.

Designation: 2G-25-70 Elev = 275.872
Described by OCS 2003 - Found 3¾" OCS Aluminum Benchmark Disk Stamped "2G-25-70", set in the Southeasterly Corner of a 4 ft. by 6 ft. Concrete Catch Basin. Monument is Located in the Northwesterly Corner of the Intersection of Yorba Linda Boulevard and Deerpark Drive, 75 ft. Westerly of the Centerline of Deerpark and 46 ft. Northerly of the Centerline of Yorba Linda. Monument is set Level with the Sidewalk.

BASIS OF COORDINATES:

Bearings and Coordinates as shown hereon are in terms of the California Coordinate System of 1983 (CCS83, Epoch 1991.35), Zone 6; based locally upon the following Control Stations as published by the County of Orange:

Name	Northing (ft.)-GRID	Easting (ft.)-GRID
2001 OCS 3282	2247998.84	6069149.29
2017 OCS 0560	2260355.81	6065880.43
2023 OCS 0111	2270990.23	6066809.18

All Coordinates and Distances are in terms of the U.S. Survey Foot,
1 meter = 39.37/12 feet

NOTES:

1. For Location of Existing Utilities, see "Road Plans."

LEGEND:

XXX.XX — Indicates Bottom of Footing Elevation
Indicates Existing Structure
Indicates New Construction
Indicates Retaining Wall

NOTE:
THE CONTRACTOR SHALL VERIFY ALL CONTROLLING FIELD DIMENSIONS BEFORE ORDERING OR FABRICATING ANY MATERIAL.

Jon Hamaguchi
GEOTECHNICAL PROFESSIONAL — APPROVAL DATE 6-17-09

DESIGN OVERSIGHT Jon Hamaguchi
6-24-09
SIGN OFF DATE

SCALE:	VERT.DATUM NAVD 88	HORZ.DATUM CCS83	DESIGN	BY Chad Harden	CHECKED
PHOTOGRAMMETRY AS OF: 12-02-2007	ALIGNMENT TIES		DETAILS	BY Gerald Fetters	CHECKED Chad Harden
SURVEYED BY B. Madigan	DRAFTED BY B. Zeman		QUANTITIES	BY	CHECKED
FIELD CHECKED BY B. Cox	CHECKED BY T. Rai				

PREPARED FOR THE STATE OF CALIFORNIA DEPARTMENT OF TRANSPORTATION

Chad W. Harden
PROJECT ENGINEER

CU 12
EA 0F0311

BRIDGE NO. 55E0082
POST MILE 16.6

RETAINING WALL NO 492
FOUNDATION PLAN NO. 1

FOUNDATION PLAN SHEET (ENGLISH) (REV. 2-25-05)

ORIGINAL SCALE IN INCHES FOR REDUCED PLANS 0 1 2 3

DISREGARD PRINTS BEARING EARLIER REVISION DATES →

REVISION DATES (PRELIMINARY STAGE ONLY): 7/1/08 | 10/24/08 | 2/13/09 | 4/6/09

SHEET 12 OF 83

FILE => 55e-492-g-rwftg01.dgn

USERNAME => trmguye DATE PLOTTED => 17-DEC-2009 TIME PLOTTED => 08:05

DIST	COUNTY	ROUTE	POST MILES TOTAL PROJECT	SHEET No	TOTAL
12	Ora	57	16.2/18.6	475	960

REGISTERED CIVIL ENGINEER — DATE 06/17/09

12-14-09
PLANS APPROVAL DATE

REGISTERED PROFESSIONAL ENGINEER — Chad W Harden — No. 67648 — Exp. 06/30/2011 — CIVIL — STATE OF CALIFORNIA

The State of California or its officers or agents shall not be responsible for the accuracy or completeness of electronic copies of this plan sheet.

OCTA
550 S MAIN STREET
ORANGE, CA 92868

RBF CONSULTING
14725 ALTON PKWY
IRVINE, CA 92618

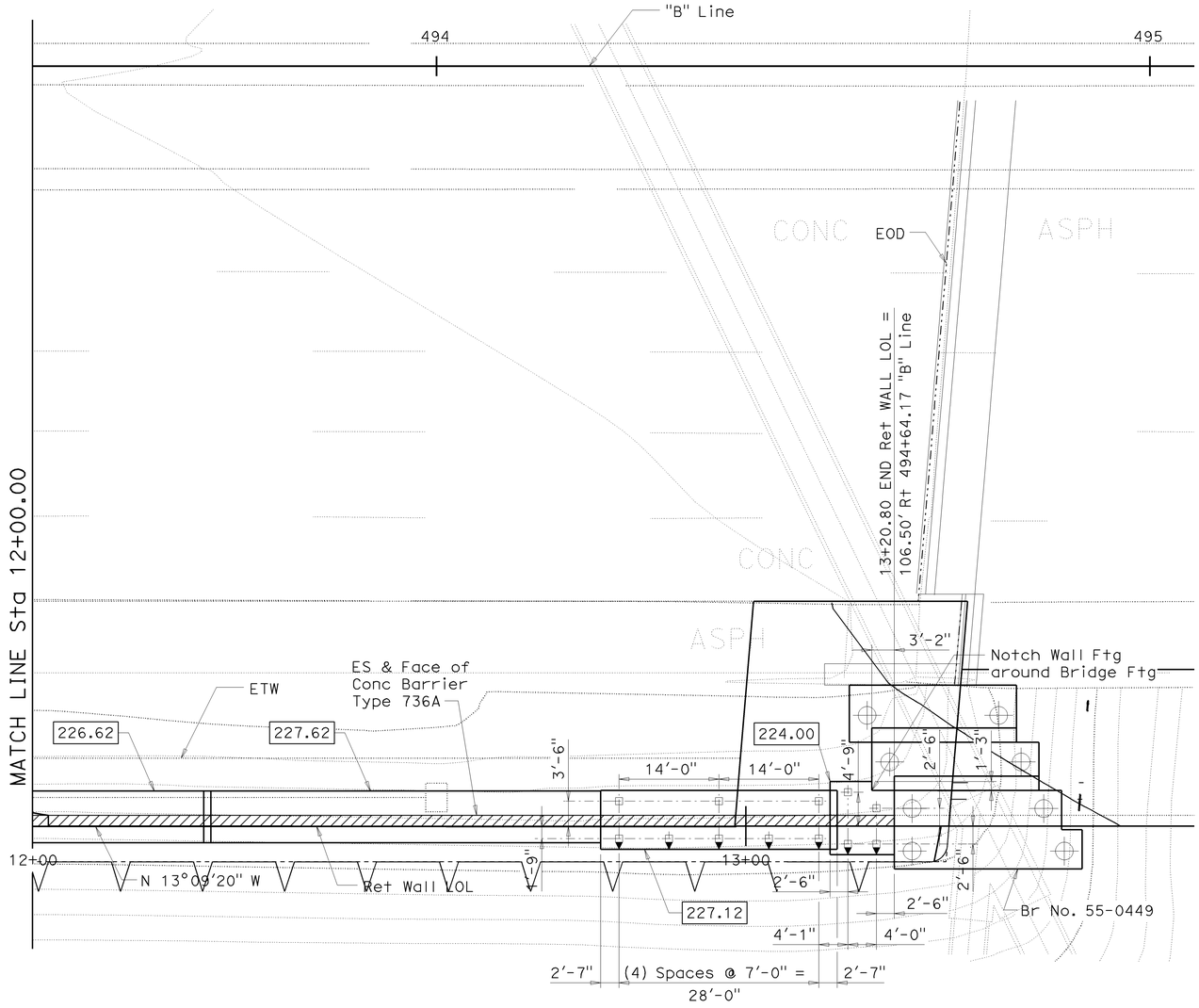

FOUNDATION PLAN

1" = 10'

LEGEND:

- XXX.XX — Indicates Bottom of Footing Elevation
- Indicates Existing Structure
- Indicates New Construction
- Indicates Retaining Wall
- Indicates Precast Concrete Pile
- Indicates Precast Concrete Pile (Battered 3:1)

NOTES:

1. For Location of Existing Utilities, see "Road Plans."

PILE DATA TABLE

Location	Pile Type	Design Loading (Service) (kips)	Nominal Resistance (kips)		Design Tip Elevation (ft)	Specified Tip Elevation (ft)
			Compression	Tension		
All Piles	12-inch Pre-cast Square Concrete (Alt-X)	90	180	90	+173.0 (a) & (b) +194.0 (c)	+173.0

NOTES:

1. Design Tip Elevations are controlled by: (a) Compression, (b) Tension, and (c) Lateral Load.
2. The Specified Tip Elevation shall not be raised above the Design Tip Elevations for Compression Load, Tension Load, and Lateral Load.

NOTE:
THE CONTRACTOR SHALL VERIFY ALL CONTROLLING FIELD DIMENSIONS BEFORE ORDERING OR FABRICATING ANY MATERIAL.

Jon Hamaguchi — GEOTECHNICAL PROFESSIONAL — 6-17-09 APPROVAL DATE

Jon Hamaguchi — DESIGN OVERSIGHT — 6-24-09 SIGN OFF DATE

SCALE:	VERT.DATUM NAVD 88	HORZ.DATUM CCS83	DESIGN	BY Chad Harden	CHECKED
PHOTOGRAMMETRY AS OF: 12-02-2007	ALIGNMENT TIES		DETAILS	BY Gerald Fetters	CHECKED Chad Harden
SURVEYED BY B. Madigan	DRAFTED BY B. Zeman		QUANTITIES	BY	CHECKED
FIELD CHECKED BY B. Cox	CHECKED BY T. Rai				

PREPARED FOR THE STATE OF CALIFORNIA DEPARTMENT OF TRANSPORTATION

Chad W. Harden
PROJECT ENGINEER

BRIDGE NO. 55E0082
POST MILE 16.6

RETAINING WALL NO 492
FOUNDATION PLAN NO. 2

FOUNDATION PLAN SHEET (ENGLISH) (REV. 2-25-05)

ORIGINAL SCALE IN INCHES FOR REDUCED PLANS 0 1 2 3

CU 12
EA 0F0311

DISREGARD PRINTS BEARING EARLIER REVISION DATES →

REVISION DATES (PRELIMINARY STAGE ONLY): 7/1/08 | 10/24/08 | 2/13/09 | 4/6/09

SHEET 13 OF 83

FILE => 55e-492-g-rwftg02.dgn

USERNAME = rtrmnguye DATE PLOTTED => 17-DEC-2009 TIME PLOTTED => 08:05

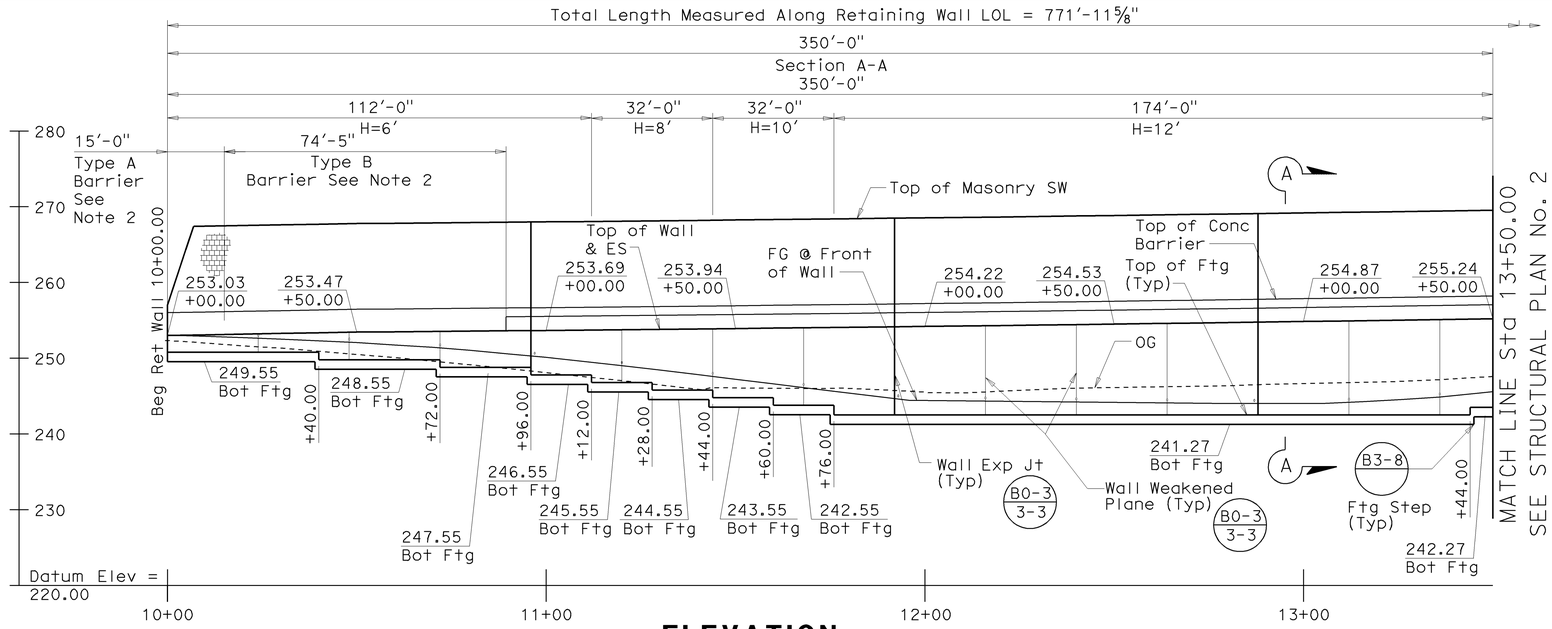

ELEVATION

SCALE: HORIZ 1" = 20'
VERT 1" = 10'

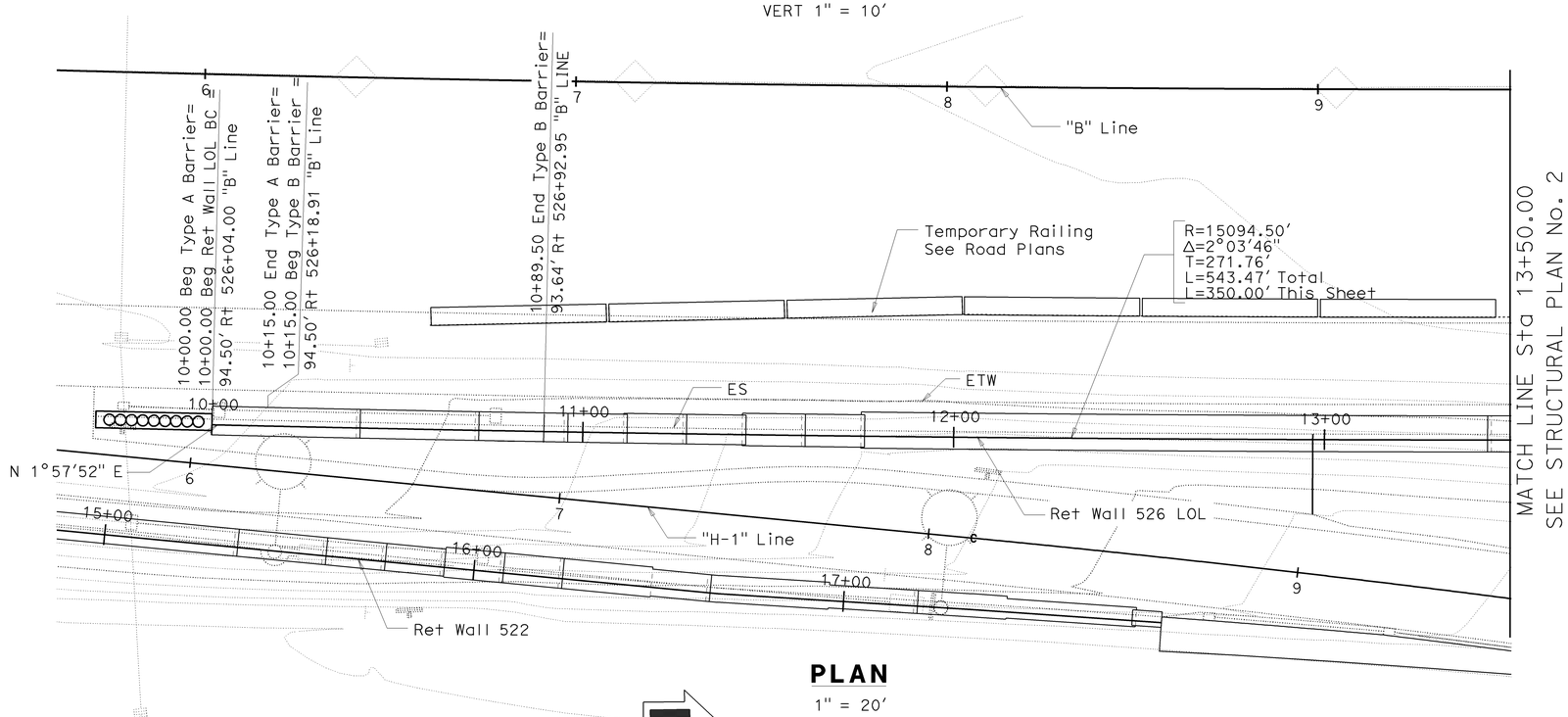

PLAN

1" = 20'

NOTE:
THE CONTRACTOR SHALL VERIFY ALL CONTROLLING FIELD DIMENSIONS BEFORE ORDERING OR FABRICATING ANY MATERIAL.

DIST	COUNTY	ROUTE	POST MILES TOTAL PROJECT	SHEET No	TOTAL SHEETS
12	Ora	57	16.2/18.6	476	960

REGISTERED CIVIL ENGINEER — 06/17/09 DATE

12-14-09
PLANS APPROVAL DATE

REGISTERED PROFESSIONAL ENGINEER — Chad W Harden — No. 67648 — Exp. 06/30/11 — CIVIL — STATE OF CALIFORNIA

The State of California or its officers or agents shall not be responsible for the accuracy or completeness of electronic copies of this plan sheet.

OCTA
550 S MAIN STREET
ORANGE, CA 92868

RBF CONSULTING
14725 ALTON PKWY
IRVINE, CA 92618

RETAINING WALL NO. 526 — BRIDGE NO 55E0084

QUANTITIES

STRUCTURE EXCAVATION (RETAINING WALL)	998	CY
STRUCTURE EXCAVATION (TYPE Y-1) (AERIALLY DEPOSITED LEAD)	987	CY
STRUCTURE BACKFILL (RETAINING WALL)	2,234	CY
16" CAST-IN-DRILLED-HOLE CONCRETE PILING	328	LF
STRUCTURAL CONCRETE, RETAINING WALL	456	CY
FRACTURED RIB TEXTURE	3,579	SQFT
SOUND WALL (MASONRY BLOCK)	8,727	SQFT
BAR REINFORCING STEEL (RETAINING WALL)	51,271	LB
CONCRETE BARRIER (TYPE 736A MODIFIED)	427	LF
CONCRETE BARRIER (TYPE 736S MODIFIED)	256	LF
CONCRETE BARRIER (TYPE A)	15	LF
CONCRETE BARRIER (TYPE B)	74	LF

NOTES:

1. This Plan Accurate for Sound Wall and Retaining Wall Work Only.
2. For Specified Barrier, See "RETAINING WALL DETAILS - TYPE A AND TYPE B BARRIER DETAILS" Sheet.
3. For Section A-A, See "RETAINING WALL No. 526 - STRUCTURE PLAN No. 2" Sheet.

DESIGN OVERSIGHT — Jon Hamaguchi — 6-24-09 SIGN OFF DATE

DESIGN	BY Chad Harden	CHECKED Kevin Burke	LFD DESIGN	LIVE LOADING: 2 FOOT SURCHARGE	
DETAILS	BY Gerald Fetters	CHECKED Chad Harden	LAYOUT	BY Gerald Fetters	CHECKED Chad Harden
QUANTITIES	BY Kelly Gillis	CHECKED Chad Harden	SPECIFICATIONS	BY S. Sheikh	PLANS AND SPECS COMPARED S. Sheikh

DESIGN GENERAL PLAN SHEET (ENGLISH) (REV. 2/25/05)

ORIGINAL SCALE IN INCHES FOR REDUCED PLANS 0 1 2 3

PREPARED FOR THE STATE OF CALIFORNIA DEPARTMENT OF TRANSPORTATION

Chad W. Harden
PROJECT ENGINEER

CU 12
EA 0F0311

BRIDGE NO.	RETAINING WALL NO 526
55E0084	STRUCTURE PLAN No. 1
POST MILE 17.2	

DISREGARD PRINTS BEARING EARLIER REVISION DATES →

REVISION DATES (PRELIMINARY STAGE ONLY): 1/4/08 | 10/24/08 | 2/13/09 | 4/6/09 | 6/17/09

SHEET 14 OF 83

FILE => 55e-526-g-rw_lo01.dgn

USERNAME => rtmmguye DATE PLOTTED => 17-DEC-2009 TIME PLOTTED => 08:05

DIST	COUNTY	ROUTE	POST MILES TOTAL PROJECT	SHEET No	TOTAL SHEETS
12	Ora	57	16.2/18.6	477	960

REGISTERED CIVIL ENGINEER — 06/17/09 DATE

12-14-09
PLANS APPROVAL DATE

REGISTERED PROFESSIONAL ENGINEER — Chad W Harden No. 67648 Exp. 06/30/11 CIVIL — STATE OF CALIFORNIA

The State of California or its officers or agents shall not be responsible for the accuracy or completeness of electronic copies of this plan sheet.

OCTA
550 S MAIN STREET
ORANGE, CA 92868

RBF CONSULTING
14725 ALTON PKWY
IRVINE, CA 92618

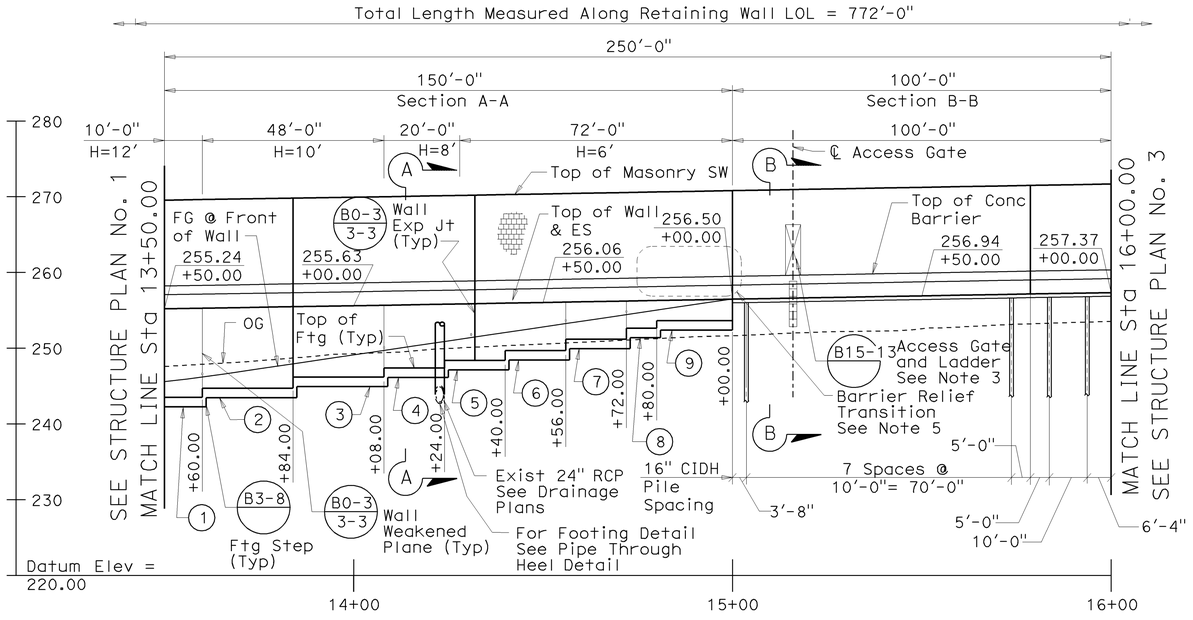

ELEVATION

SCALE: HORIZ 1" = 20'
VERT 1" = 10'

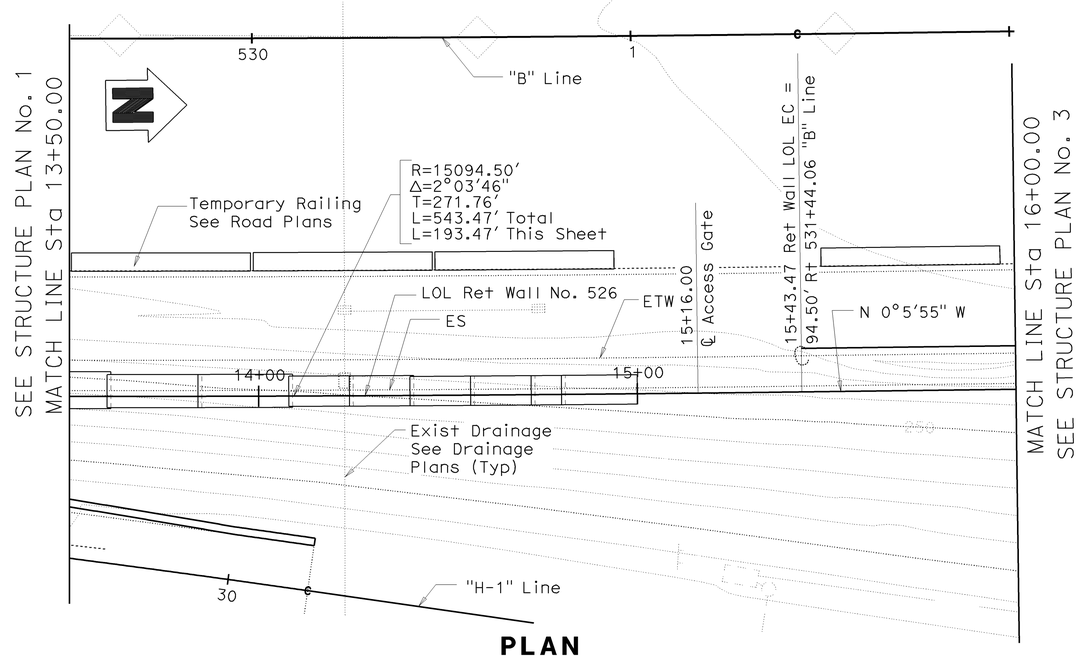

PLAN

SCALE: 1" = 20'

NOTES:

1. This Plan Accurate for Sound Wall and Retaining Wall Work Only.
2. For Excavation and Backfill Details, See "RETAINING WALL DETAILS - LIMITS OF PAYMENT FOR EXCAVATION AND BACKFILL" Sheet.
3. For Barrier Modification of Access Gate, See Barrier at Access Gate Detail on "SOUND WALL - MASONRY BLOCK WITH BARRIER ON RETAINING WALL - DETAILS No. 3" Sheet.
4. For Sound Wall Texture and Color, See "SOUNDWALL - MASONRY BLOCK WITH BARRIER ON RETAINING WALL - DETAILS No. 2" Sheet.
5. For Barrier Relief Transition Detail, See "SOUND WALL ON RETAINING WALL DETAILS - MISCELLANEOUS DETAILS No. 1" Sheet.
6. For Barrier Relief Detail, See "SOUND WALL ON RETAINING WALL DETAILS - MISCELLANEOUS DETAILS No. 1" Sheet.

BOTTOM OF FOOTING ELEVATIONS	
LABEL	ELEVATION
1	242.27
2	243.47
3	244.95
4	246.15
5	247.15
6	248.45
7	249.95
8	251.40
9	252.40

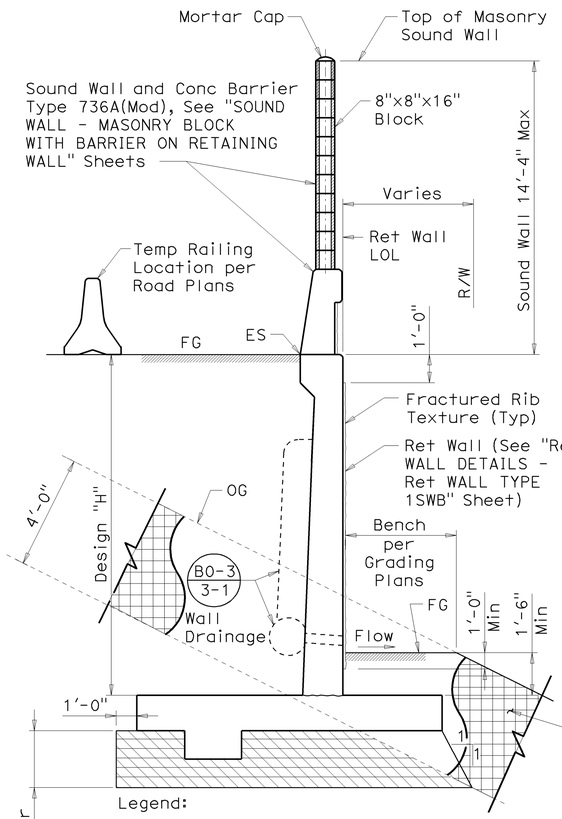

SECTION A-A

No Scale

DESIGN "H"	OVER EXCAVATION DEPTH
6'-0" AND LESS	2'-0"
8'-0"	3'-6"
10'-0"	5'-0"
12'-0"	5'-0"

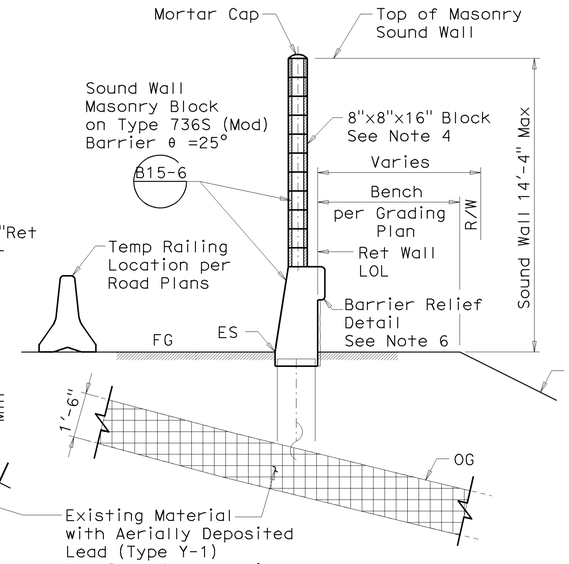

SECTION B-B

NO SCALE

NOTE:
THE CONTRACTOR SHALL VERIFY ALL CONTROLLING FIELD DIMENSIONS BEFORE ORDERING OR FABRICATING ANY MATERIAL.

Jon Hamaguchi
DESIGN OVERSIGHT
6-24-09
SIGN OFF DATE

DESIGN	BY Chad Harden	CHECKED Kevin Burke	LFD DESIGN	LIVE LOADING: 2 FOOT SURCHARGE	
DETAILS	BY Gerald Fetters	CHECKED Chad Harden	LAYOUT	BY Gerald Fetters	CHECKED Chad Harden
QUANTITIES	BY Kelly Gillis	CHECKED Chad Harden	SPECIFICATIONS	BY S. Sheikh	PLANS AND SPECS COMPARED S. Sheikh

PREPARED FOR THE STATE OF CALIFORNIA
DEPARTMENT OF TRANSPORTATION

Chad W. Harden
PROJECT ENGINEER

BRIDGE NO.	POST MILE
55E0084	17.2

RETAINING WALL NO 526
STRUCTURE PLAN No. 2

DESIGN GENERAL PLAN SHEET (ENGLISH) (REV. 2/25/05)

ORIGINAL SCALE IN INCHES FOR REDUCED PLANS 0 1 2 3

CU 12
EA 0F0311

DISREGARD PRINTS BEARING EARLIER REVISION DATES →

REVISION DATES (PRELIMINARY STAGE ONLY)									SHEET	OF
7/31/08	10/24/08	2/13/09	4/6/09	6/11/09					15	83

FILE => 55e-526-g-rw_lo02.dgn

USERNAME => trmguye DATE PLOTTED => 17-DEC-2009 TIME PLOTTED => 08:05

DIST	COUNTY	ROUTE	POST MILES TOTAL PROJECT	SHEET No	TOTAL SHEETS
12	Ora	57	16.2/18.6	478	960

REGISTERED CIVIL ENGINEER — DATE 06/17/09

12-14-09
PLANS APPROVAL DATE

Chad W Harden No. 67648 Exp. 06/30/11 CIVIL — REGISTERED PROFESSIONAL ENGINEER — STATE OF CALIFORNIA

The State of California or its officers or agents shall not be responsible for the accuracy or completeness of electronic copies of this plan sheet.

OCTA
550 S MAIN STREET
ORANGE, CA 92868

RBF CONSULTING
14725 ALTON PKWY
IRVINE, CA 92618

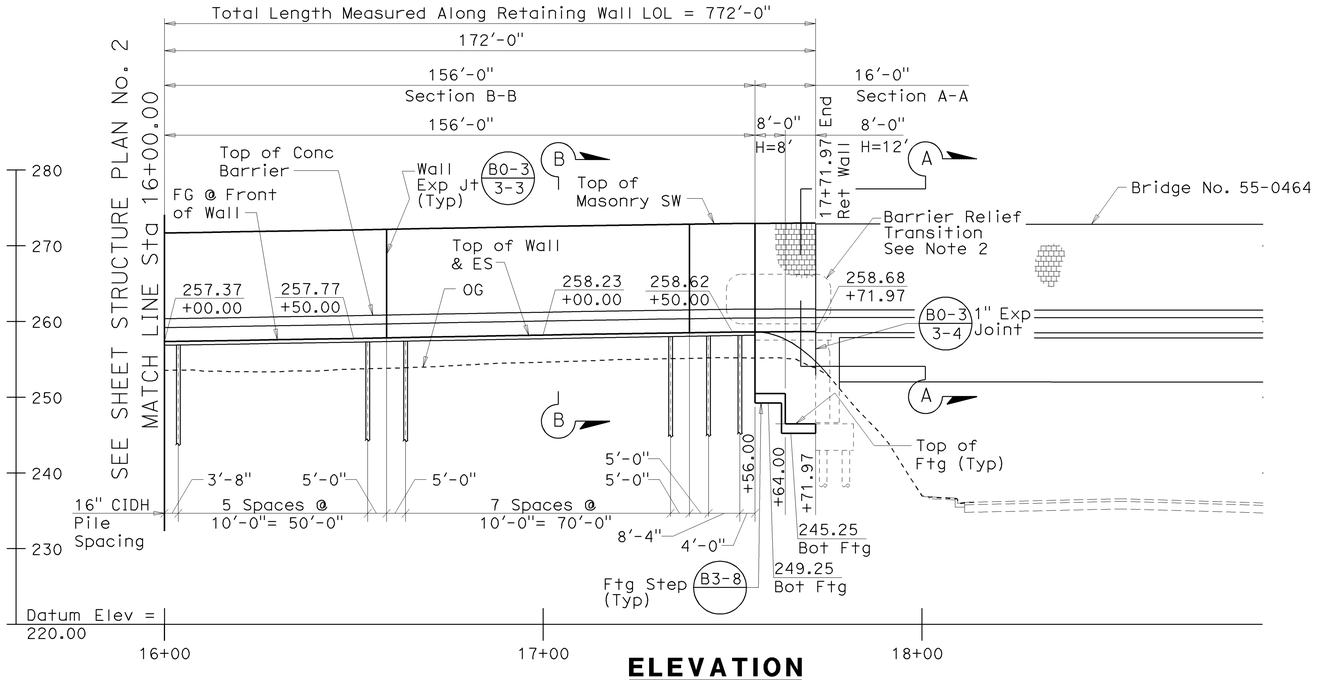

ELEVATION

SCALE: HORIZ 1" = 20'
VERT 1" = 10'

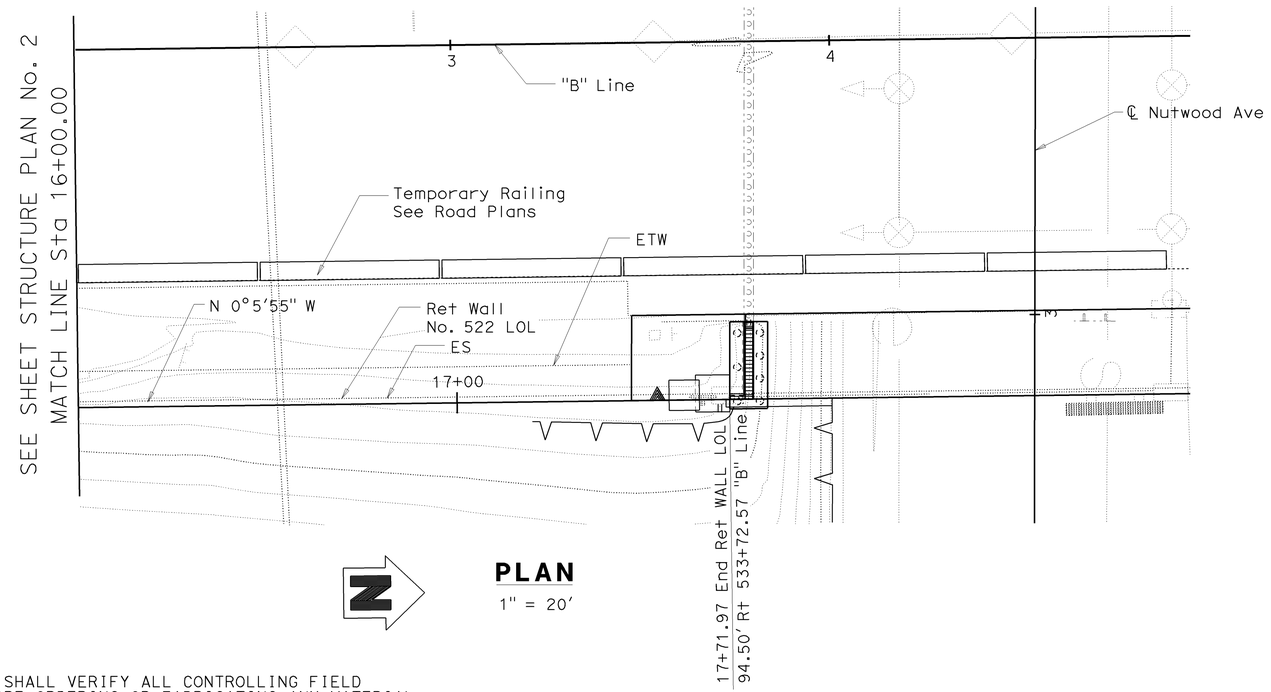

PLAN

1" = 20'

NOTES:

1. This Plan Accurate for Sound Wall and Retaining Wall Work Only.
2. For Barrier Relief Transition Detail, See "SOUND WALL ON RETAINING WALL DETAILS - MISCELLANEOUS DETAILS NO. 1" Sheet.

NOTE:
THE CONTRACTOR SHALL VERIFY ALL CONTROLLING FIELD DIMENSIONS BEFORE ORDERING OR FABRICATING ANY MATERIAL.

Jon Hamaguchi
DESIGN OVERSIGHT Jon Hamaguchi
6-24-09
SIGN OFF DATE

DESIGN	BY Chad Harden	CHECKED Kevin Burke	LFD DESIGN	LIVE LOADING: 2 FOOT SURCHARGE	
DETAILS	BY Gerald Fetters	CHECKED Chad Harden	LAYOUT	BY Gerald Fetters	CHECKED Chad Harden
QUANTITIES	BY Kelly Gillis	CHECKED Chad Harden	SPECIFICATIONS	BY S. Sheikh	PLANS AND SPECS COMPARED S. Sheikh

PREPARED FOR THE STATE OF CALIFORNIA DEPARTMENT OF TRANSPORTATION

Chad W. Harden
PROJECT ENGINEER

BRIDGE NO.	RETAINING WALL NO. 526
55E0084	
POST MILE	STRUCTURE PLAN No. 3
17.2	

DESIGN GENERAL PLAN SHEET (ENGLISH) (REV. 2/25/05)

ORIGINAL SCALE IN INCHES FOR REDUCED PLANS 0 1 2 3

CU 12
EA 0F0311

DISREGARD PRINTS BEARING EARLIER REVISION DATES →

REVISION DATES (PRELIMINARY STAGE ONLY): 7/3/08 | 10/24/08 | 2/13/09 | 4/6/09 | 6/17/09

SHEET 16 OF 83

FILE => 55e-526-g-rw_lo03.dgn

USERNAME => frmnguye DATE PLOTTED => 17-DEC-2009 TIME PLOTTED => 08:21

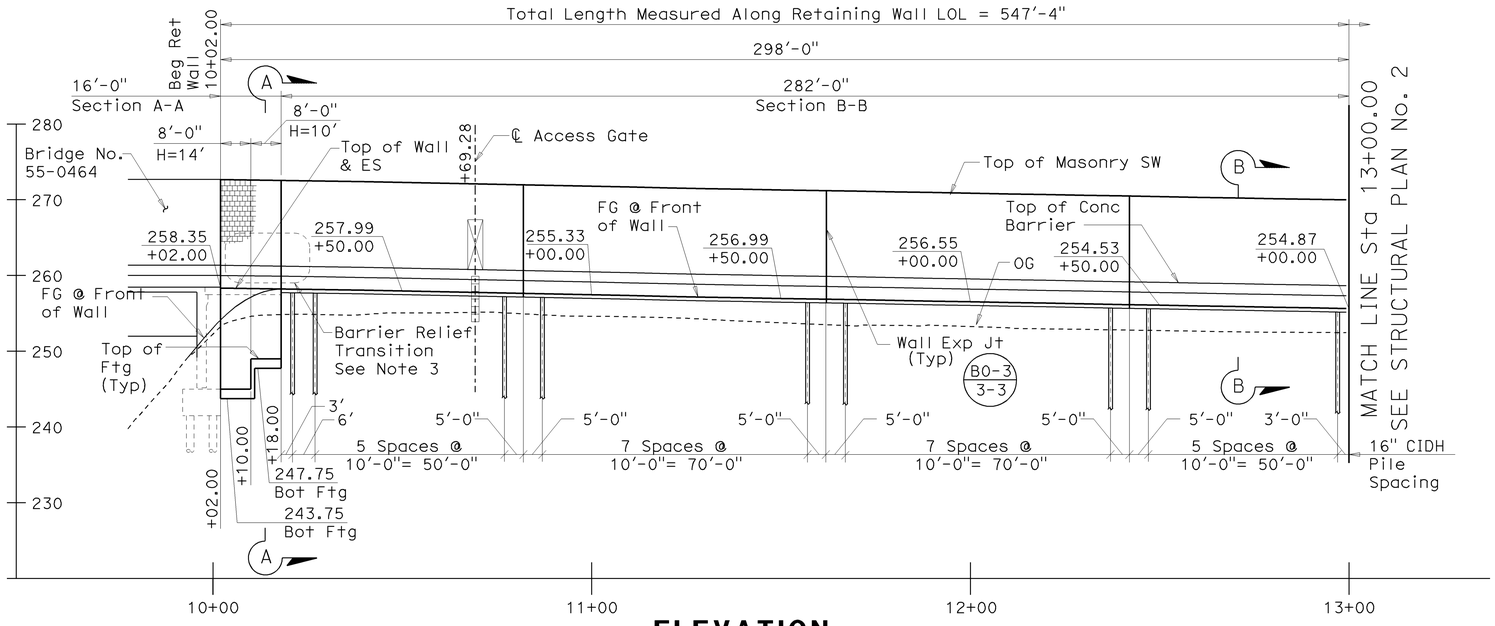

ELEVATION

SCALE: HORIZ 1" = 20'
VERT 1" = 10'

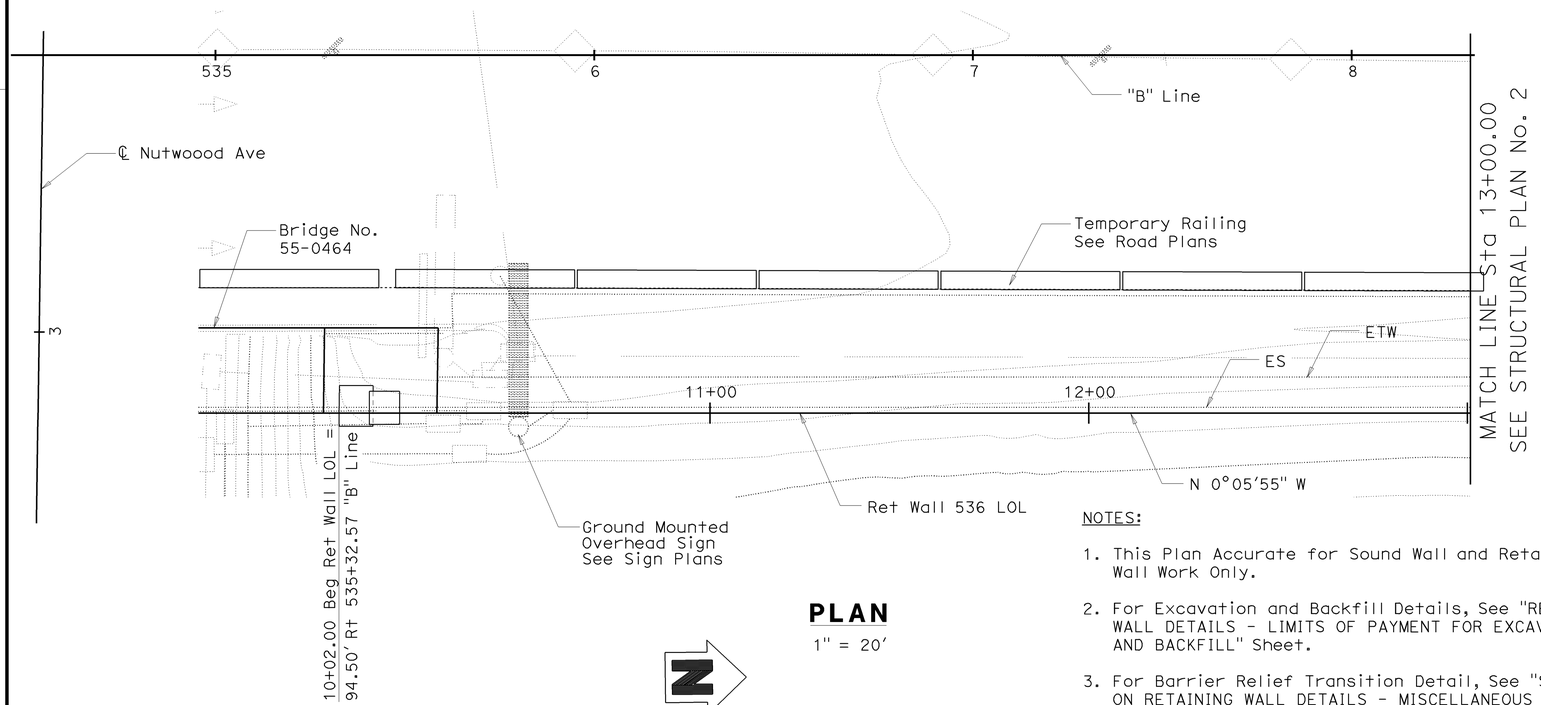

PLAN

1" = 20'

NOTES:

1. This Plan Accurate for Sound Wall and Retaining Wall Work Only.
2. For Excavation and Backfill Details, See "RETAINING WALL DETAILS - LIMITS OF PAYMENT FOR EXCAVATION AND BACKFILL" Sheet.
3. For Barrier Relief Transition Detail, See "SOUND WALL ON RETAINING WALL DETAILS - MISCELLANEOUS DETAILS No. 1" Sheet.

NOTE:
THE CONTRACTOR SHALL VERIFY ALL CONTROLLING FIELD DIMENSIONS BEFORE ORDERING OR FABRICATING ANY MATERIAL.

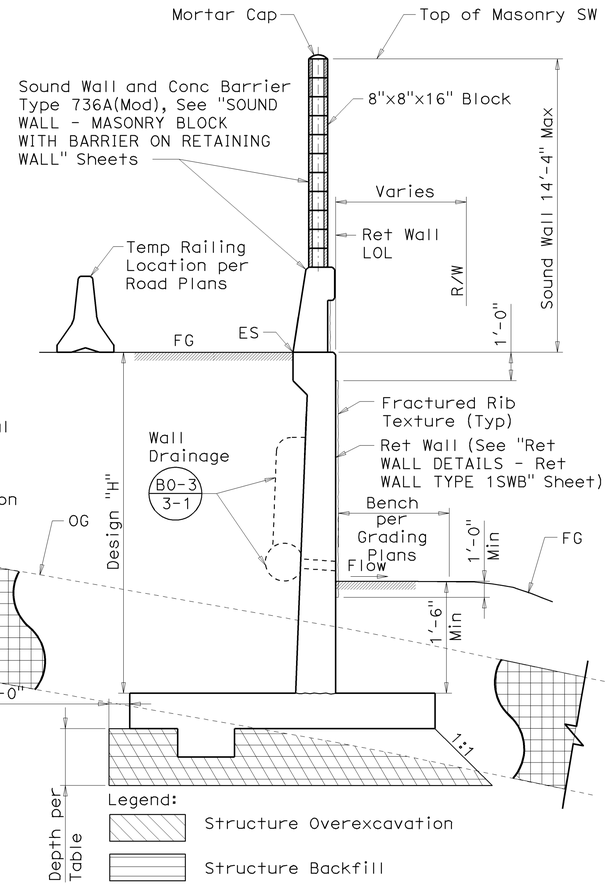

DESIGN "H"	OVER EXCAVATION DEPTH
10'-0"	1'-6"
14'-0"	3'-0"

SECTION A-A

No Scale

DIST	COUNTY	ROUTE	POST MILES TOTAL PROJECT	SHEET No	TOTAL SHEETS
12	Ora	57	16.2/18.6	479	960

REGISTERED CIVIL ENGINEER — DATE 06/17/09

REGISTERED PROFESSIONAL ENGINEER — Chad W Harden — No. 67648 — Exp. 06/30/11 — CIVIL — STATE OF CALIFORNIA

12-14-09
PLANS APPROVAL DATE

The State of California or its officers or agents shall not be responsible for the accuracy or completeness of electronic copies of this plan sheet.

OCTA
550 S MAIN STREET
ORANGE, CA 92868

RBF CONSULTING
14725 ALTON PKWY
IRVINE, CA 92618

Jon Hanaguchi
DESIGN OVERSIGHT Jon Hanaguchi
6-24-09
SIGN OFF DATE

	BY	CHECKED			
DESIGN	Chad Harden	Kevin Burke	LFD DESIGN	LIVE LOADING: 2 FOOT SURCHARGE	
DETAILS	Gerald Fetters	Chad Harden	LAYOUT	Gerald Fetters	Chad Harden
QUANTITIES	Kelly Gillis	Chad Harden	SPECIFICATIONS	S. Sheikh	PLANS AND SPECS COMPARED S. Sheikh

PREPARED FOR THE STATE OF CALIFORNIA DEPARTMENT OF TRANSPORTATION

Chad W. Harden
PROJECT ENGINEER

BRIDGE NO. 55E0085
POST MILE 17.4

RETAINING WALL NO 536
STRUCTURE PLAN No. 1

DESIGN GENERAL PLAN SHEET (ENGLISH) (REV. 2/25/05)

ORIGINAL SCALE IN INCHES FOR REDUCED PLANS 0 1 2 3

CU 12
EA 0F0311

DISREGARD PRINTS BEARING EARLIER REVISION DATES →

REVISION DATES (PRELIMINARY STAGE ONLY): 7/31/08 | 10/24/08 | 2/13/09 | 4/6/09 | 6/17/09

SHEET 17 OF 83

FILE => 55e-536-g-rw_lo01.dgn

USERNAME = frmnguye DATE PLOTTED => 17-DEC-2009 TIME PLOTTED => 08:05

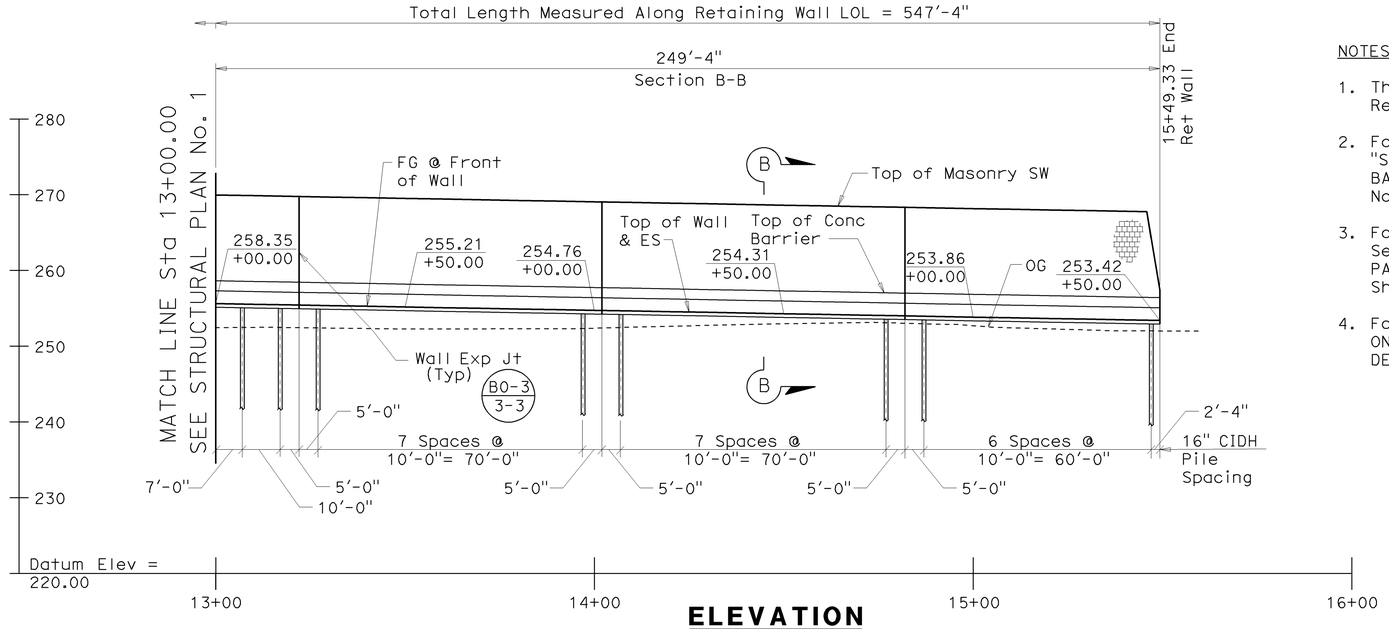

ELEVATION

SCALE: HORIZ 1" = 20'
VERT 1" = 10'

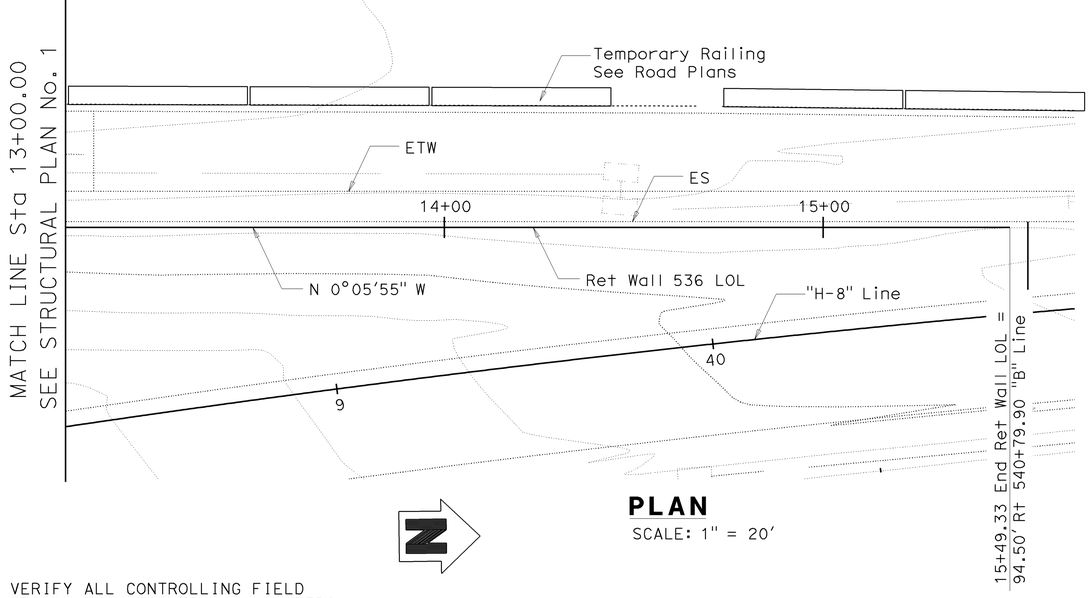

PLAN

SCALE: 1" = 20'

NOTE:
THE CONTRACTOR SHALL VERIFY ALL CONTROLLING FIELD DIMENSIONS BEFORE ORDERING OR FABRICATING ANY MATERIAL.

NOTES:

1. This Plan Accurate for Sound Wall and Retaining Wall Work Only.
2. For Sound Wall Texture and Color, See "SOUNDWALL - MASONRY BLOCK WITH BARRIER ON RETAINING WALL - DETAIL No. 2" Sheet.
3. For Excavation and Backfill Details, See "RETAINING WALL DETAILS - LIMITS OF PAYMENT FOR EXCAVATION AND BACKFILL" Sheet.
4. For Barrier Relief Detail, See "SOUND WALL ON RETAINING WALL DETAILS - MISCELLANEOUS DETAILS No. 1" Sheet.

DIST	COUNTY	ROUTE	POST MILES TOTAL PROJECT	SHEET No	TOTAL SHEETS
12	Ora	57	16.2/18.6	480	960

REGISTERED CIVIL ENGINEER — DATE 06/17/09

12-14-09
PLANS APPROVAL DATE

REGISTERED PROFESSIONAL ENGINEER — Chad W Harden — No. 67648 — Exp. 06/30/11 — CIVIL — STATE OF CALIFORNIA

The State of California or its officers or agents shall not be responsible for the accuracy or completeness of electronic copies of this plan sheet.

OCTA
550 S MAIN STREET
ORANGE, CA 92868

RBF CONSULTING
14725 ALTON PKWY
IRVINE, CA 92618

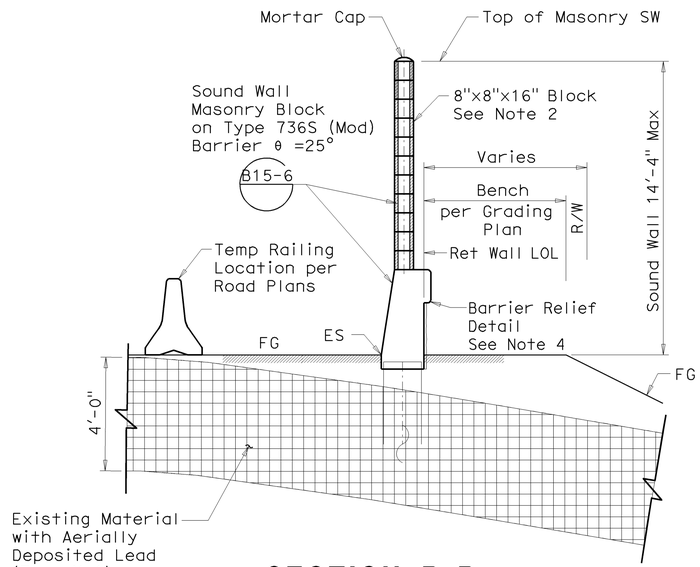

SECTION B-B

NO SCALE

RETAINING WALL No. 536 — BRIDGE No. 55E0085

QUANTITIES

STRUCTURE EXCAVATION (RETAINING WALL)	56	CY
STRUCTURE EXCAVATION (TYPE Y-1) (AERIALLY DEPOSITED LEAD)	31	CY
STRUCTURE BACKFILL (RETAINING WALL)	93	CY
16" CAST-IN-DRILLED-HOLE CONCRETE PILING	682	LF
STRUCTURAL CONCRETE, RETAINING WALL	18	CY
FRACTURED RIB TEXTURE	157	SQFT
SOUND WALL (MASONRY BLOCK)	6,206	SQFT
BAR REINFORCING STEEL (RETAINING WALL)	2,458	LB
CONCRETE BARRIER (TYPE 736A MODIFIED)	16	LF
CONCRETE BARRIER (TYPE 736S MODIFIED)	531	LF

Jon Hamaguchi
DESIGN OVERSIGHT — Jon Hamaguchi
6-24-09
SIGN OFF DATE

	BY	CHECKED			
DESIGN	Chad Harden	Kevin Burke	LFD DESIGN	LIVE LOADING: 2 FOOT SURCHARGE	
DETAILS	Gerald Fetters	Chad Harden	LAYOUT	Gerald Fetters	Chad Harden
QUANTITIES	Kelly Gillis	Chad Harden	SPECIFICATIONS	S. Sheikh	PLANS AND SPECS COMPARED S. Sheikh

PREPARED FOR THE STATE OF CALIFORNIA
DEPARTMENT OF TRANSPORTATION

Chad W. Harden
PROJECT ENGINEER

CU 12
EA 0F0311

BRIDGE NO.	RETAINING WALL NO 536
55E0085	STRUCTURE PLAN No. 2
POST MILE 17.4	

DESIGN GENERAL PLAN SHEET (ENGLISH) (REV. 2/25/05)

ORIGINAL SCALE IN INCHES FOR REDUCED PLANS 0 1 2 3

DISREGARD PRINTS BEARING EARLIER REVISION DATES →

REVISION DATES (PRELIMINARY STAGE ONLY): 7/31/08 | 10/24/08 | 2/13/09 | 4/16/09 | 6/17/09

SHEET 18 OF 83

FILE => 55e-536-g-rw_lo02.dgn

USERNAME = trmartin DATE PLOTTED => 17-DEC-2009 TIME PLOTTED => 09:47

DIST	COUNTY	ROUTE	POST MILES TOTAL PROJECT	SHEET No	TOTAL SHEETS
12	Ora	57	16.2/18.6	481	960

REGISTERED CIVIL ENGINEER — 06/17/09 DATE

12-14-09
PLANS APPROVAL DATE

REGISTERED PROFESSIONAL ENGINEER — Chad W Harden — No. 67648 — Exp. 06/30/11 — CIVIL — STATE OF CALIFORNIA

The State of California or its officers or agents shall not be responsible for the accuracy or completeness of electronic copies of this plan sheet.

OCTA
550 S MAIN STREET
ORANGE, CA 92868

RBF CONSULTING
14725 ALTON PKWY
IRVINE, CA 92618

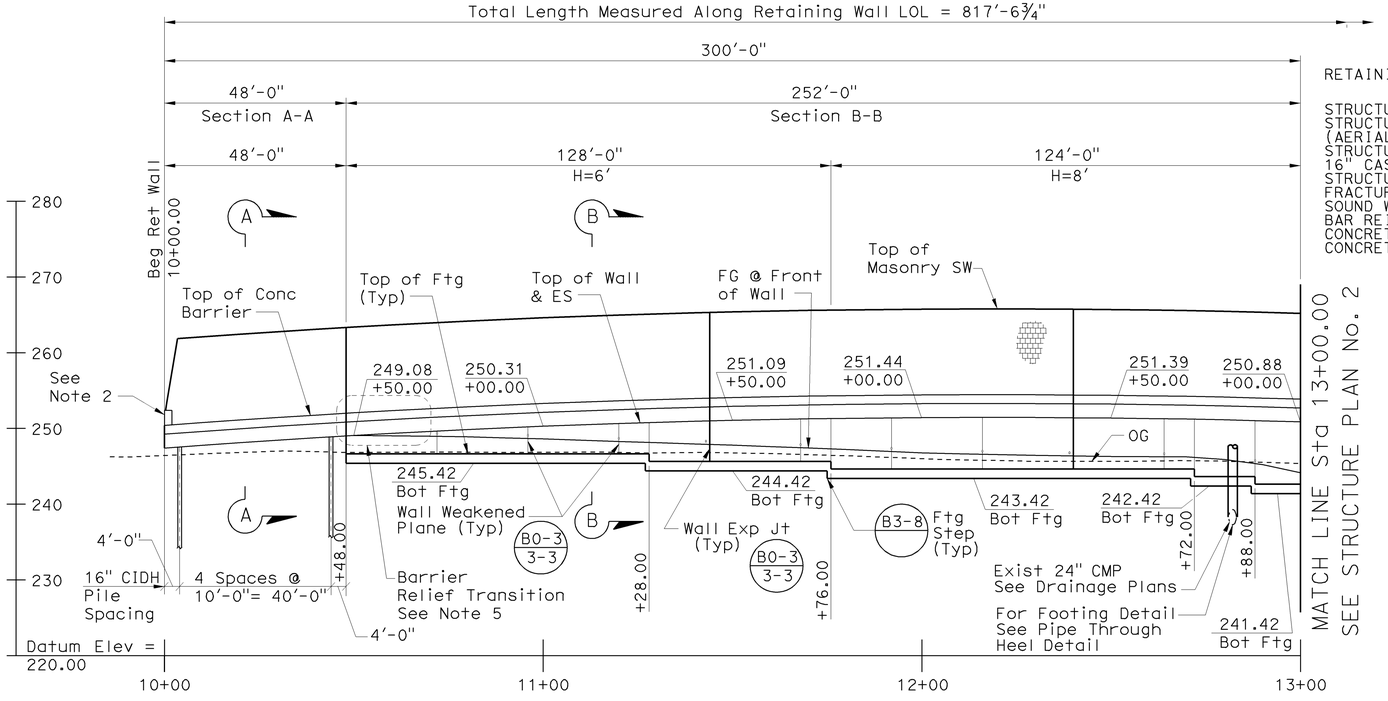

ELEVATION

SCALE: HORIZ 1" = 20'
VERT 1" = 10'

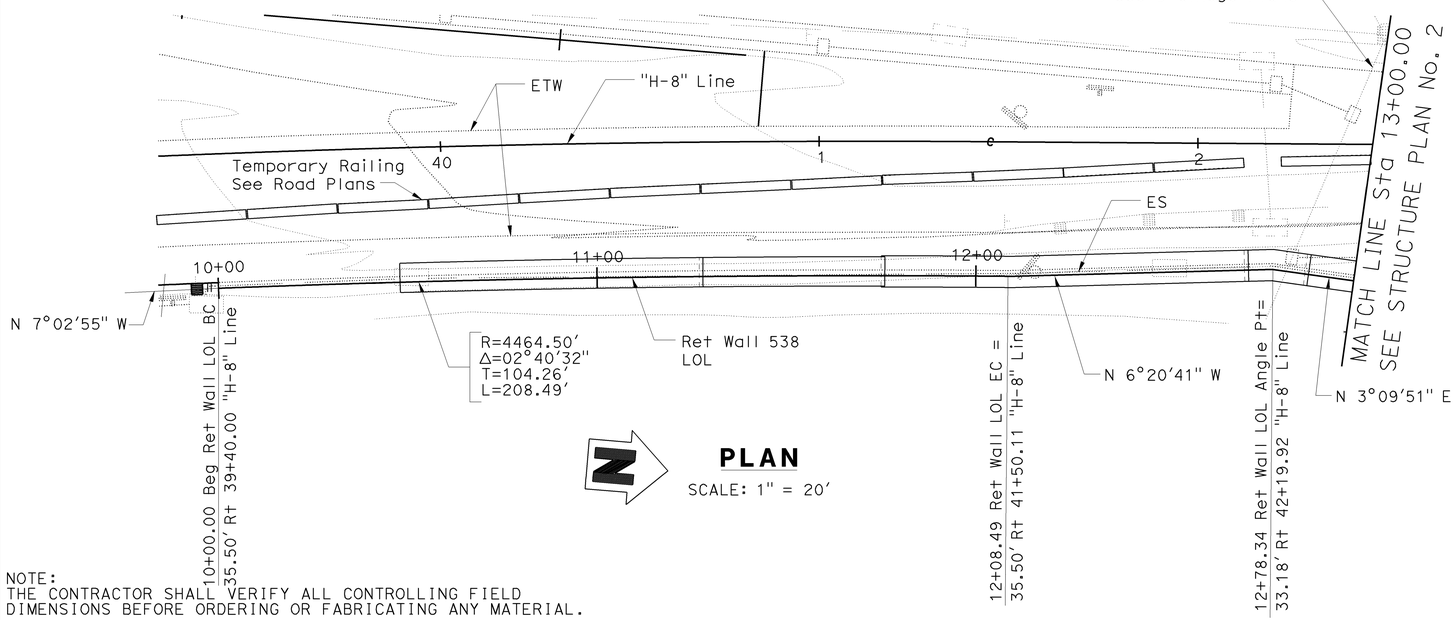

PLAN

SCALE: 1" = 20'

NOTE:
THE CONTRACTOR SHALL VERIFY ALL CONTROLLING FIELD DIMENSIONS BEFORE ORDERING OR FABRICATING ANY MATERIAL.

RETAINING WALL No. 538 — BRIDGE No. 55E0086

QUANTITIES

STRUCTURE EXCAVATION (RETAINING WALL)	859	CY
STRUCTURE EXCAVATION (TYPE Y-1) (AERIALLY DEPOSITED LEAD)	548	CY
STRUCTURE BACKFILL (RETAINING WALL)	1,372	CY
16" CAST-IN-DRILLED-HOLE CONCRETE PILING	227	LF
STRUCTURAL CONCRETE, RETAINING WALL	442	CY
FRACTURED RIB TEXTURE	2,491	SQFT
SOUND WALL (MASONRY BLOCK)	9,204	SQFT
BAR REINFORCING STEEL (RETAINING WALL)	47,235	LB
CONCRETE BARRIER (TYPE 736A MODIFIED)	640	LF
CONCRETE BARRIER (TYPE 736S MODIFIED)	170	LF

NOTES:

1. This Plan Accurate for Sound Wall and Retaining Wall Work Only.
2. For Barrier Detail at Beginning of Wall, See Thrie Beam Barrier Block Detail on "SOUND WALL ON RETAINING WALL DETAILS - MISCELLANEIOUS DETAILS No. 3" Sheet.
3. For Sound Wall Texture and Color, See "SOUNDWALL - MASONRY BLOCK WITH BARRIER ON RETAINING WALL - DETAILS No. 2 Sheet.
4. For Excavation and Backfill Details, See "RETAINING WALL DETAILS - LIMITS OF PAYMENT FOR EXCAVATION AND BACKFILL" Sheet.
5. For Barrier Relief Transition Detail, See "SOUND WALL ON RETAINING WALL DETAILS - MISCELLANEOUS DETAILS No. 1" Sheet.
6. For Barrier Relief Detail, See "SOUND WALL ON RETAINING WALL DETAILS - MISCELLANEOUS DETAILS No. 1" Sheet.

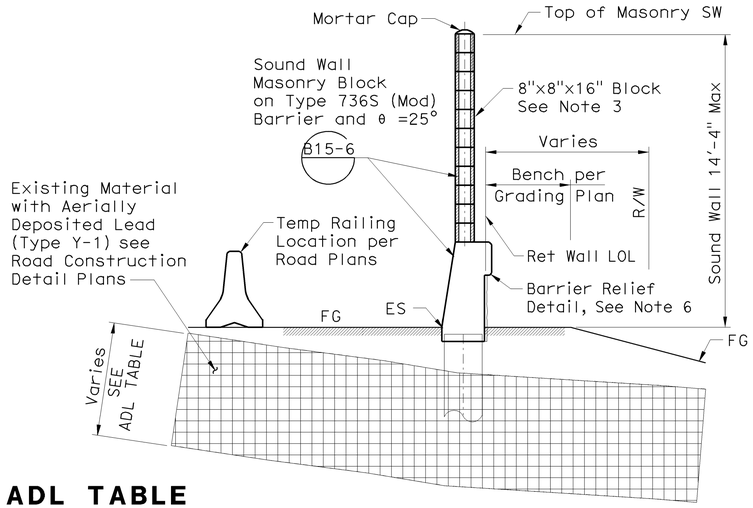

ADL TABLE

WALL LOL STATION	DEPTH OF EXIST ADL
10+00.00 to 13+55.61	4'-0"
13+55.61 to 18+17.56	6"

SECTION A-A

NO SCALE

DESIGN OVERSIGHT: Jon Hamaguchi	DESIGN	BY Chad Harden	CHECKED Kevin Burke	LFD DESIGN	LIVE LOADING: 2 FOOT SURCHARGE		
6-24-09 SIGN OFF DATE	DETAILS	BY Gerald Fetters	CHECKED Chad Harden	LAYOUT	BY Gerald Fetters	CHECKED Chad Harden	
	QUANTITIES	BY Kelly Gillis	CHECKED Chad Harden	SPECIFICATIONS	BY S. Sheikh	PLANS AND SPECS COMPARED S. Sheikh	

PREPARED FOR THE STATE OF CALIFORNIA DEPARTMENT OF TRANSPORTATION

Chad W. Harden
PROJECT ENGINEER

CU 12
EA 0F0311

BRIDGE NO. 55E0086
POST MILE 17.5

RETAINING WALL No. 538
STRUCTURE PLAN No. 1

DISREGARD PRINTS BEARING EARLIER REVISION DATES →

REVISION DATES (PRELIMINARY STAGE ONLY): 1/4/08 | 10/24/08 | 2/13/09 | 4/6/09 | 6/17/09

SHEET 19 OF 83

DESIGN GENERAL PLAN SHEET (ENGLISH) (REV. 2/25/05)

ORIGINAL SCALE IN INCHES FOR REDUCED PLANS 0 1 2 3

FILE => 55e-538-g-rw_lo01.dgn

USERNAME => ttmartin DATE PLOTTED => 17-DEC-2009 TIME PLOTTED => 09:47

DIST	COUNTY	ROUTE	POST MILES TOTAL PROJECT	SHEET No	TOTAL SHEETS
12	Ora	57	16.2/18.6	482	960

REGISTERED CIVIL ENGINEER — 06/17/09 DATE

12-14-09
PLANS APPROVAL DATE

REGISTERED PROFESSIONAL ENGINEER — Chad W Harden — No. 67648 — Exp. 06/30/11 — CIVIL — STATE OF CALIFORNIA

The State of California or its officers or agents shall not be responsible for the accuracy or completeness of electronic copies of this plan sheet.

OCTA
550 S MAIN STREET
ORANGE, CA 92868

RBF CONSULTING
14725 ALTON PKWY
IRVINE, CA 92618

Total Length Measured Along Retaining Wall = 817′-6¾"

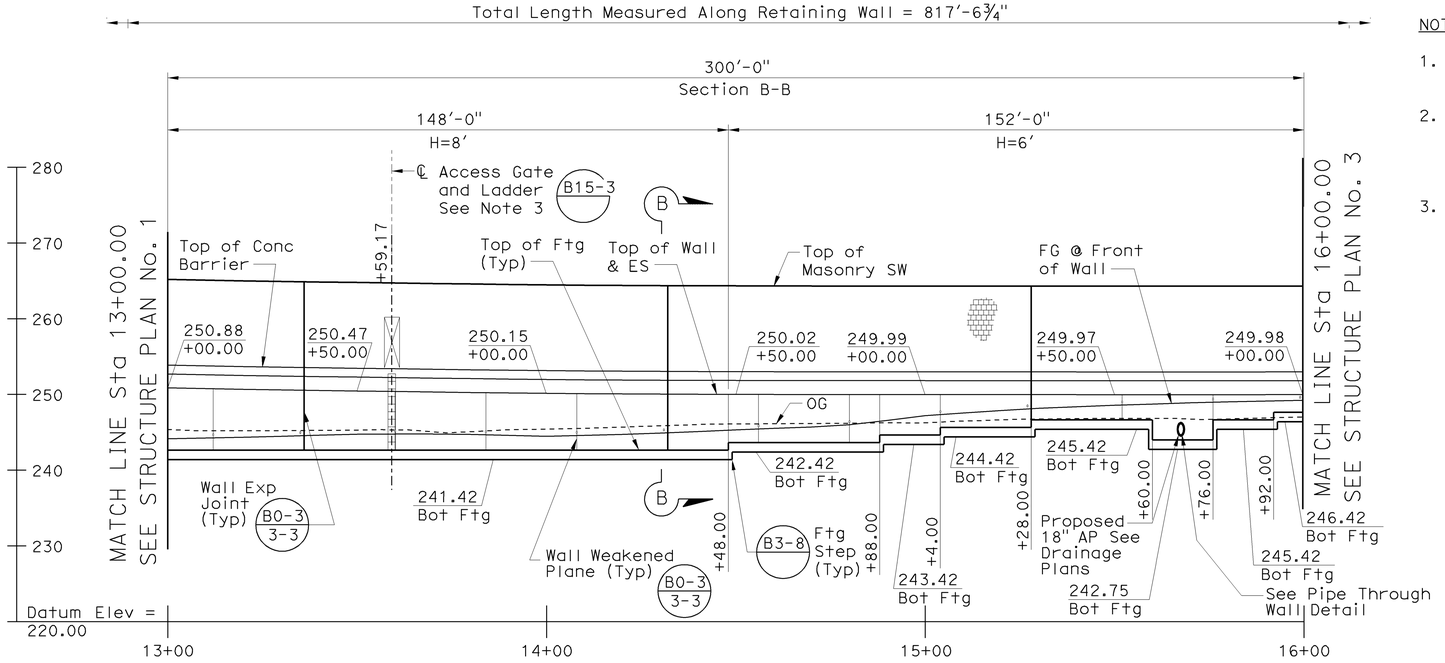

ELEVATION

SCALE: HORIZ 1" = 20′
VERT 1" = 10′

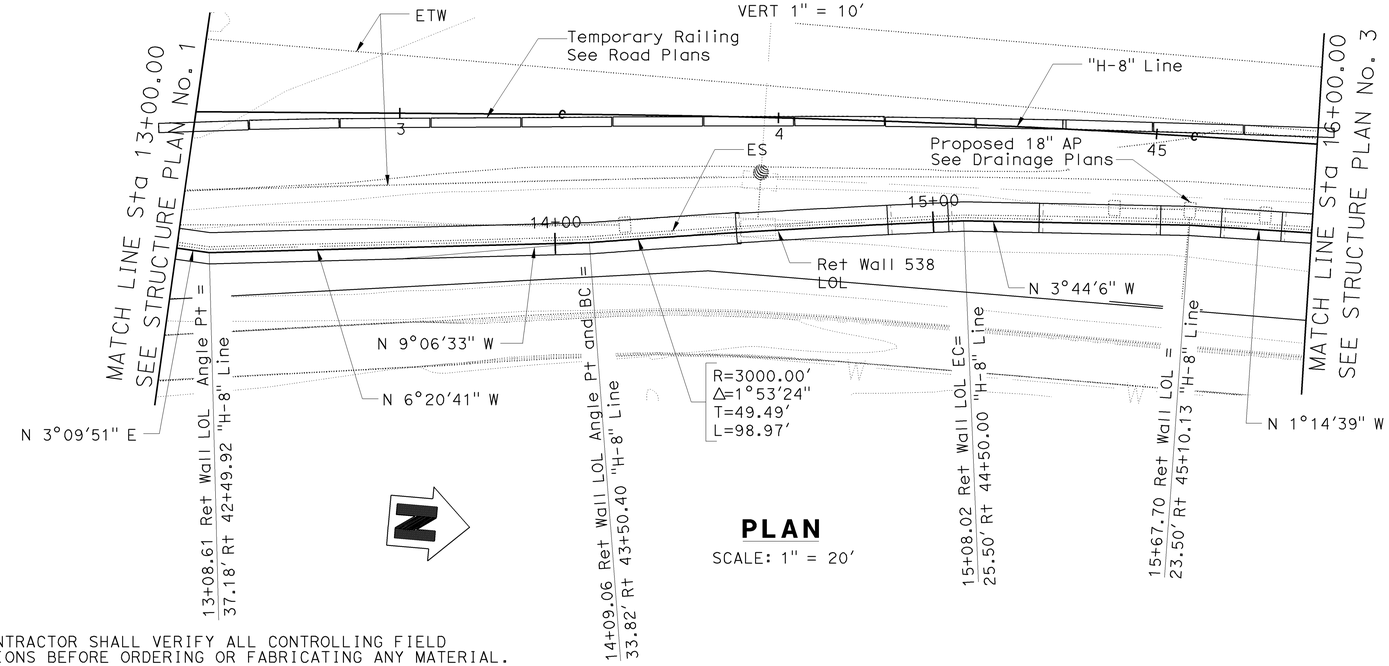

PLAN

SCALE: 1" = 20′

NOTES:

1. This Plan Accurate for Sound Wall and Retaining Wall Work Only.
2. For Excavation and Backfill Details See "RETAINING WALL DETAILS - LIMITS OF PAYMENT FOR EXCAVATION AND BACKFILL" Sheet.
3. For Barrier Modification of Access Gate, See Barrier at Access Gate Detail on "SOUND WALL - MASONRY BLOCK WITH BARRIER ON RETAINING WALL - DETAILS No. 3" Sheet.

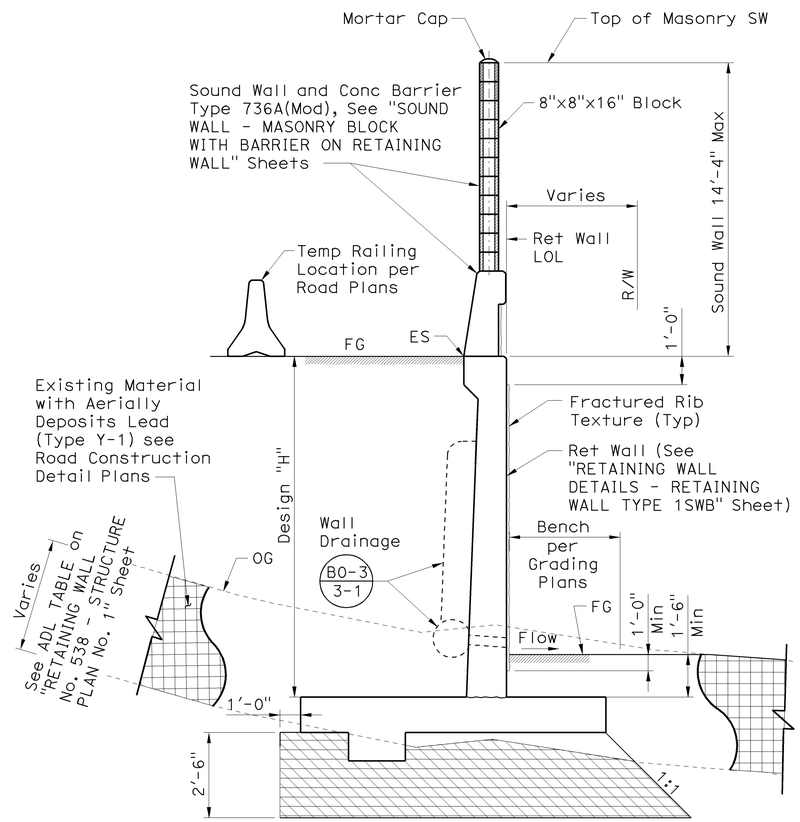

LEGEND:

Structure Overexcavation

Structure Backfill

SECTION B-B

NO SCALE

NOTE:
THE CONTRACTOR SHALL VERIFY ALL CONTROLLING FIELD DIMENSIONS BEFORE ORDERING OR FABRICATING ANY MATERIAL.

Jon Hanaguchi
DESIGN OVERSIGHT Jon Hanaguchi

6-24-09
SIGN OFF DATE

DESIGN	BY Chad Harden	CHECKED Kevin Burke	LFD DESIGN	LIVE LOADING: 2 FOOT SURCHARGE			
DETAILS	BY Gerald Fetters	CHECKED Chad Harden	LAYOUT	BY Gerald Fetters	CHECKED Chad Harden		
QUANTITIES	BY Kelly Gillis	CHECKED Chad Harden	SPECIFICATIONS	BY S. Sheikh	PLANS AND SPECS COMPARED S. Sheikh		

PREPARED FOR THE STATE OF CALIFORNIA DEPARTMENT OF TRANSPORTATION

Chad W. Harden
PROJECT ENGINEER

BRIDGE NO. 55E0086
POST MILE 17.5

RETAINING WALL No. 538
STRUCTURE PLAN No. 2

DESIGN GENERAL PLAN SHEET (ENGLISH) (REV. 2/25/05)

ORIGINAL SCALE IN INCHES FOR REDUCED PLANS 0 1 2 3

CU 12
EA 0F0311

FILE => 55e-538-g-rw_lo02.dgn

DISREGARD PRINTS BEARING EARLIER REVISION DATES

REVISION DATES (PRELIMINARY STAGE ONLY): 7/1/08 | 10/24/08 | 2/13/09 | 4/6/09 | 6/11/09

SHEET 20 OF 83

USERNAME => tmartin DATE PLOTTED => 17-DEC-2009 TIME PLOTTED => 09:47

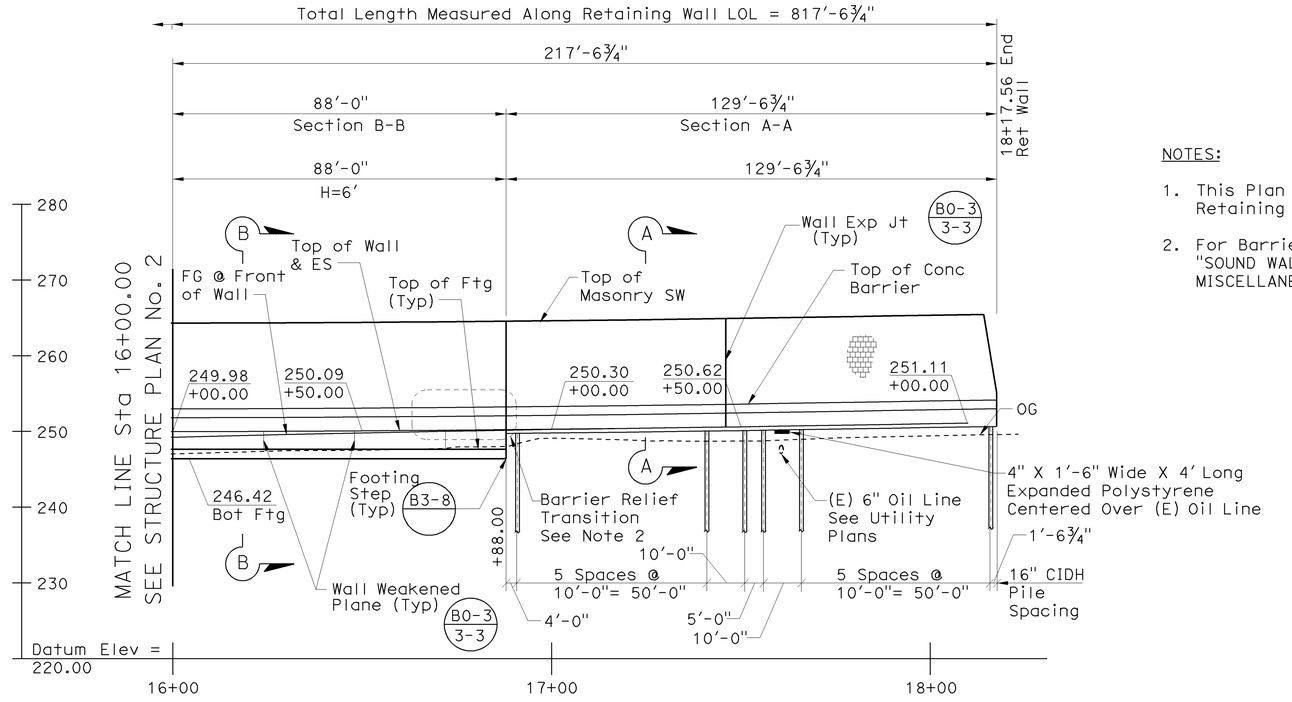

ELEVATION

SCALE: HORIZ 1" = 20'
VERT 1" = 10'

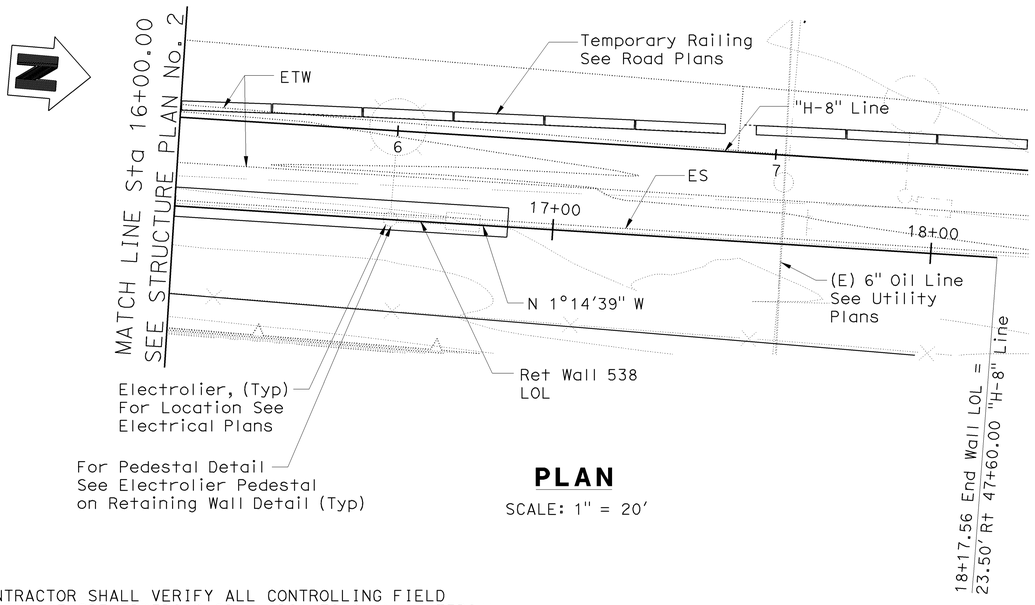

PLAN

SCALE: 1" = 20'

NOTES:

1. This Plan Accurate for Sound Wall and Retaining Wall Work Only.
2. For Barrier Relief Transition Detail, See "SOUND WALL ON RETAINING WALL DETAILS - MISCELLANEOUS DETAILS No. 1" Sheet.

NOTE:
THE CONTRACTOR SHALL VERIFY ALL CONTROLLING FIELD DIMENSIONS BEFORE ORDERING OR FABRICATING ANY MATERIAL.

DIST	COUNTY	ROUTE	POST MILES TOTAL PROJECT	SHEET No	TOTAL SHEETS
12	Ora	57	16.2/18.6	483	960

REGISTERED CIVIL ENGINEER — 06/17/09 DATE

12-14-09
PLANS APPROVAL DATE

REGISTERED PROFESSIONAL ENGINEER — Chad W Harden — No. 67648 — Exp. 06/30/11 — CIVIL — STATE OF CALIFORNIA

The State of California or its officers or agents shall not be responsible for the accuracy or completeness of electronic copies of this plan sheet.

OCTA
550 S MAIN STREET
ORANGE, CA 92868

RBF CONSULTING
14725 ALTON PKWY
IRVINE, CA 92618

Jon Hamaguchi — Jon Hamaguchi
DESIGN OVERSIGHT
6-24-09
SIGN OFF DATE

DESIGN	BY Chad Harden	CHECKED Kevin Burke	LFD DESIGN	LIVE LOADING: 2 FOOT SURCHARGE	
DETAILS	BY Gerald Fetters	CHECKED Chad Harden	LAYOUT	BY Gerald Fetters	CHECKED Chad Harden
QUANTITIES	BY Kelly Gillis	CHECKED Chad Harden	SPECIFICATIONS	BY S. Sheikh	PLANS AND SPECS COMPARED S. Sheikh

PREPARED FOR THE STATE OF CALIFORNIA DEPARTMENT OF TRANSPORTATION

Chad W. Harden
PROJECT ENGINEER

BRIDGE NO. 55E0086
POST MILE 17.5

RETAINING WALL No. 538
STRUCTURE PLAN No. 3

DESIGN GENERAL PLAN SHEET (ENGLISH) (REV. 2/25/05)

ORIGINAL SCALE IN INCHES FOR REDUCED PLANS 0 1 2 3

CU 12
EA 0F0311

DISREGARD PRINTS BEARING EARLIER REVISION DATES →

REVISION DATES (PRELIMINARY STAGE ONLY): 7/1/08 | 10/24/08 | 2/13/09 | 4/6/09 | 6/11/09

SHEET 21 OF 83

FILE => 55e-538-g-rw_lo03.dgn

USERNAME => tmartin DATE PLOTTED => 17-DEC-2009 TIME PLOTTED => 09:47

DIST.	COUNTY	ROUTE	POST MILES TOTAL PROJECT	SHEET NO.	TOTAL SHEETS
12	Ora	57	16.2/18.6	484	960

06/17/09
REGISTERED ENGINEER - CIVIL

12-14-09
PLANS APPROVAL DATE

REGISTERED PROFESSIONAL ENGINEER
Chad W Harden
No. 67648
Exp 06/30/11
CIVIL
STATE OF CALIFORNIA

The State of California or its officers or agents shall not be responsible for the accuracy or completeness of electronic copies of this plan sheet.

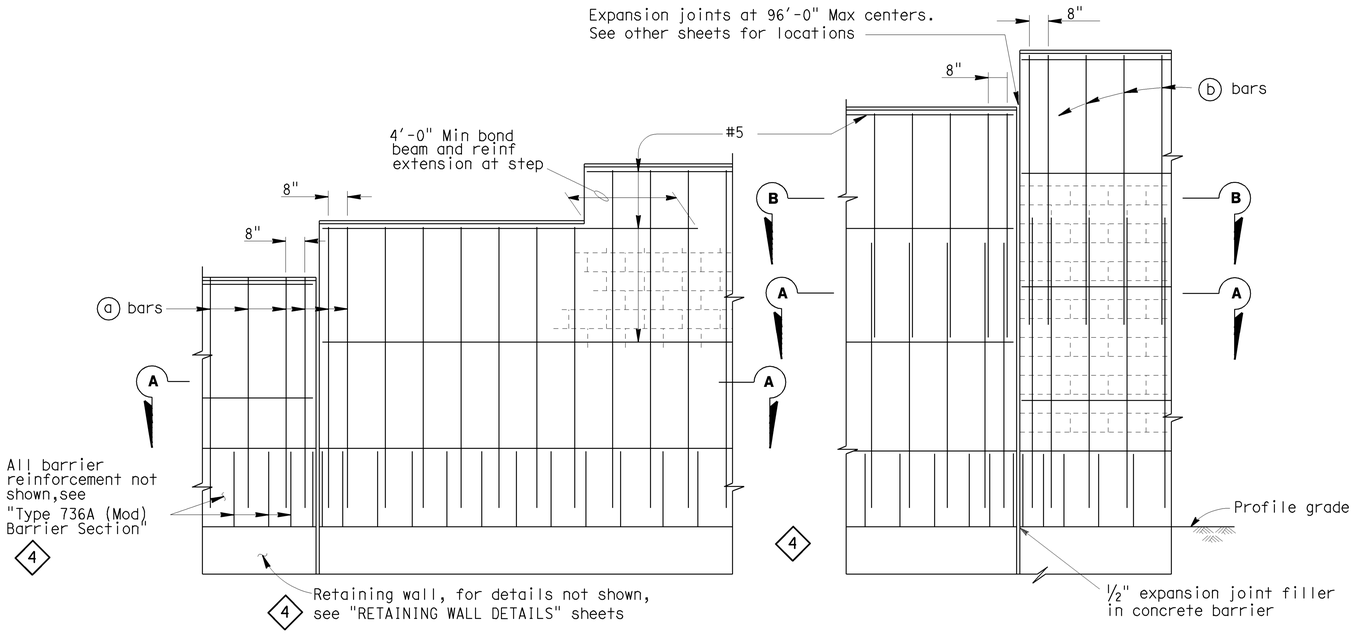

PART ELEVATIONS

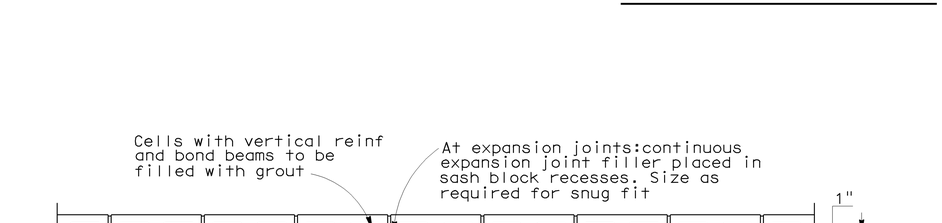

SECTION A-A

For details not shown,see other details

H=6'-4" THRU H=10'-4"

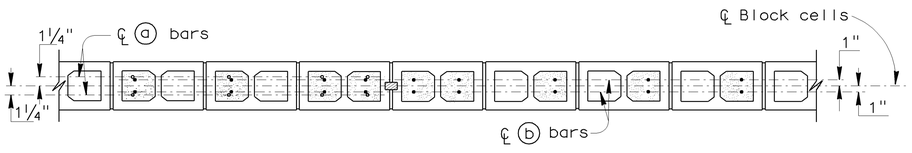

SECTION A-A SECTION B-B

For details not shown,see other details

H=12'-4" THRU H=16'-4"

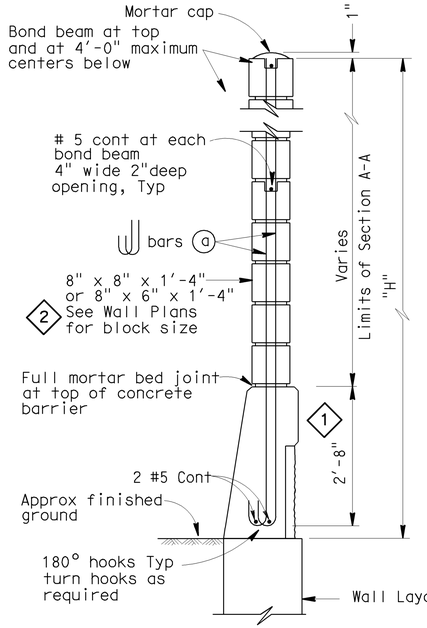

H=6'-4" THRU H=10'-4"

For details not shown,see H=12'-4" thru H=16'-4"

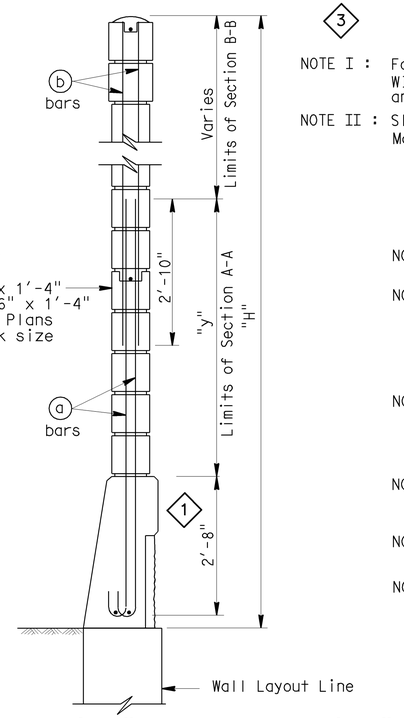

H=12'-4" THRU H=16'-4"

For details not shown,see H=6'-4" thru H=10'-4"

TYPICAL SECTIONS

SOUNDWALL REINFORCEMENT TABLE

Maximum H	a bars @ 1'-4" Max	b bars @ 1'-4" Max	"y"	f'm (KSI)	Compressive Strength of CMU (KSI)	Maximum H
6'-4"	# 4	———	———	1.5	1.9	6'-4"
8'-4"	# 4	———	———	1.5	1.9	8'-4"
10'-4"	# 4	———	———	1.5	1.9	10'-4"
12'-4"	# 5	# 4	5'-0"	1.5	1.9	12'-4"
14'-4"	# 6	# 4	7'-0"	1.5	1.9	14'-4"
16'-4"	# 6	# 4	9'-0"	2.5	3.7	16'-4"

3

NOTE I : For details not shown,see "SOUNDWALL - MASONRY BLOCK WITH BARRIER ON RETAINING WALL - DETAILS No.2" and "DETAILS No.3" Sheets

NOTE II : Slope ground at traffic side of barrier to drain. Maximum slope ±10%.

GENERAL NOTES:

NOTE A: For type of block and joint finish, see other sheets.

NOTE B: When blocks are laid in stacked bond, ladder type, galvanized joint reinforcement shall be provided. A minimum of 0.07"-0.14" wire continuous at 4'-0" maximum to be used. Locate reinforcement in joints that are at the approximate midpoint between bond beams.

NOTE C: Horizontal joints shall be tooled concave or may be weathered.
Vertical joints shall be tooled concave or may be raked.

NOTE D: For intermediate wall heights that are between the "H's" given. Use the tabular information for the next higher "H".

NOTE E: Masonry strengths are listed in "SOUNDWALL REINFORCEMENT TABLE".

NOTE F: Concrete to be used for the barrier shall contain not less than 590 pounds of cementitious material per cubic yard.

STANDARD DRAWING

FILE NO. xs15-130-1e

APPROVED BY T SATTER
RESPONSIBLE TECHNICAL SPECIALIST
APPROVAL DATE 9-2-08

RELEASED BY ROBERTO LACALLE
RESPONSIBLE OFFICE CHIEF
RELEASE DATE 9-2-08

1 Modified barrier shape and reversed hook direction of stem bar
2 Block size referenced to wall plans
3 Notes revised
4 References coordinated

STATE OF CALIFORNIA
DEPARTMENT OF TRANSPORTATION

DIVISION OF ENGINEERING SERVICES

BRIDGE NO. 55E0078, 55E0079, 55E0082, 55E0083, 55E0085, 55E0086
POST MILE VARIES

SOUNDWALL - MASONRY BLOCK WITH BARRIER ON RETAINING WALL
DETAILS NO. 1

DS OSD 2147A (ENGLISH STANDARD DRAWING "XS" BORDER REV. 01/11/08)

ORIGINAL SCALE IN INCHES FOR REDUCED PLANS 0 1 2 3

CU EA

DISREGARD PRINTS BEARING EARLIER REVISION DATES →

REVISION DATES (PRELIMINARY STAGE ONLY)

SHEET 22 OF 83

USERNAME => trmartin

55e-538-u-miscdt01.dgn

DATE PLOTTED => 17-DEC-2009 TIME PLOTTED => 10:06

DIST.	COUNTY	ROUTE	POST MILES TOTAL PROJECT	SHEET NO.	TOTAL SHEETS
12	Ora	57	16.2/18.6	485	960

06/17/09
REGISTERED ENGINEER - CIVIL

12-14-09
PLANS APPROVAL DATE

REGISTERED PROFESSIONAL ENGINEER
Chad W Harden
No. 67648
Exp 06/30/11
CIVIL
STATE OF CALIFORNIA

The State of California or its officers or agents shall not be responsible for the accuracy or completeness of electronic copies of this plan sheet.

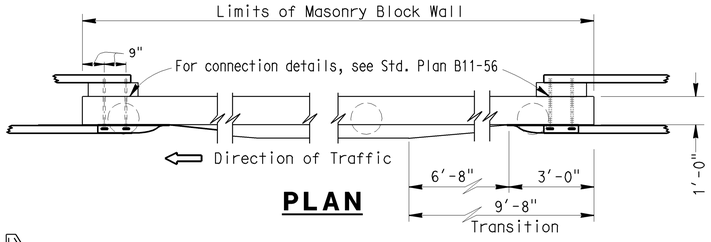

PLAN

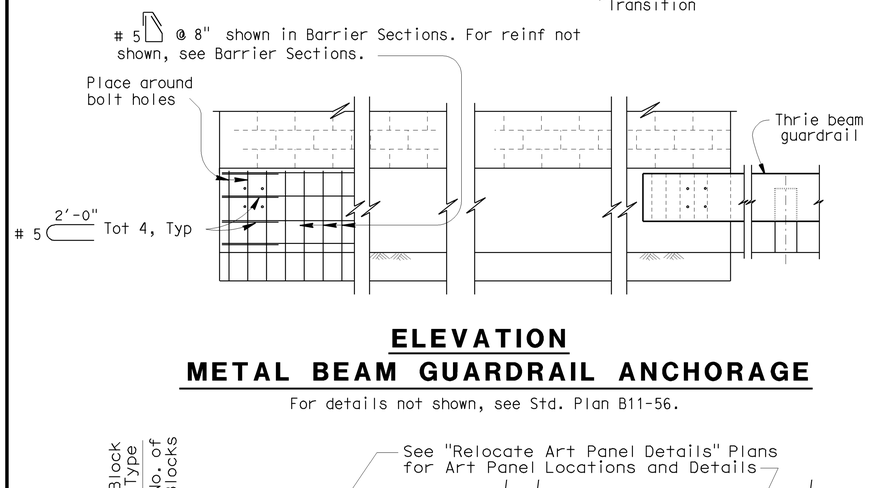

ELEVATION
METAL BEAM GUARDRAIL ANCHORAGE

For details not shown, see Std. Plan B11-56.

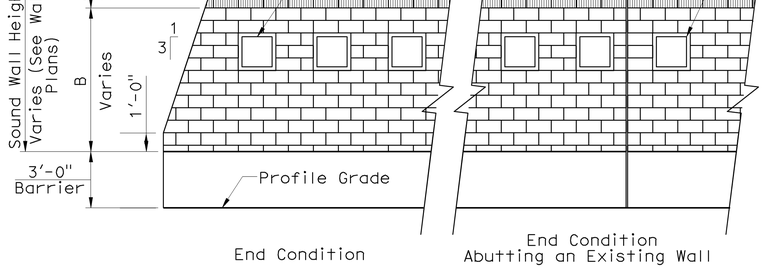

SOUND WALL AESTHETICS ◇1

NO SCALE

MASONRY BLOCK TYPE TABLE

Wall Numbers	Block Type	Block Description
462, 466, 474	A	Wall cap rows (Sand Colored scored split face concrete both sides) 3-scored. See Detail B
492, 526, 536, 538	A	Wall cap rows (Tan scored split face concrete both sides) 3-scored. See Detail B
462, 466, 474	B	Main Wall surface (Sand Colored split face concrete both sides)
492, 526, 536, 538	B	Main Wall surface (Tan split face concrete both sides)

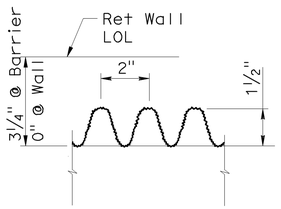

FRACTURED RIB TEXTURE (PROJECTING) ◇2

NO SCALE

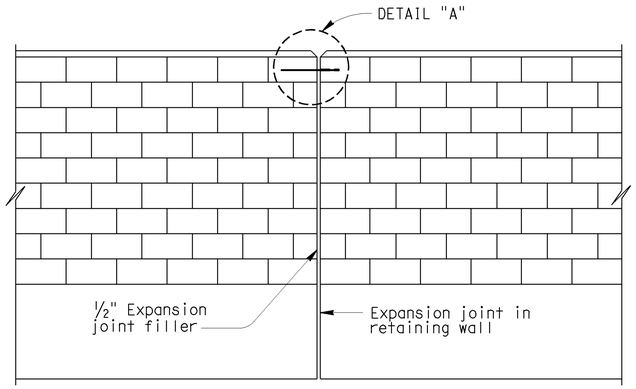

ALIGNMENT KEY DETAIL

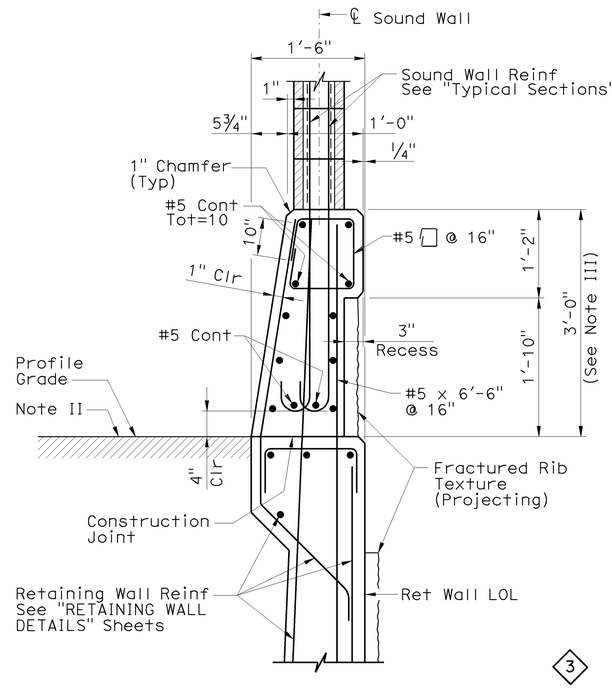

◇3

TYPE 736A (Mod) BARRIER SECTION

NOTES:

I : For details not shown, see "RETAINING WALL DETAILS" sheets.

II : Slope ground at traffic side of barrier to drain. Maximum slope ±10%. See Standard Plan B11-56, Note D.

III : Dimension may vary with roadway cross slope, and with certain thickness of surfacing.

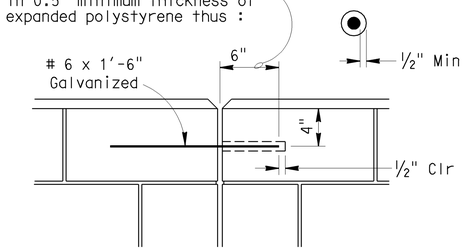

DETAIL A

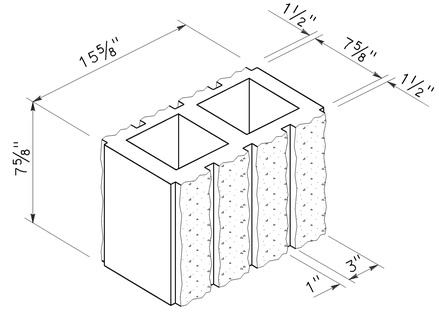

DETAIL B

NO SCALE

8" Wide 3-Score split face both sides

DESIGN NOTES

DESIGN

Uniform Building Code, 1997 Edition and the Bridge Design Specifications.

DESIGN WIND LOAD

33 PSF

DESIGN SEISMIC LOAD

0.57 Dead load

CONCRETE MASONRY

REINFORCED CONCRETE

f'c = 3250 PSI
fy = 60 KSI

REGULAR STRENGTH	HIGH STRENGTH	
f'm = 1500 PSI	f'm = 2000 PSI	f'm = 2500 PSI
f_b = 1500 PSI	f_b = 660 PSI	f_b = 830 PSI
fs = 24.0 KSI	fs = 24.0 KSI	fs = 24000 PSI
n = 25.8	n = 19.3	n = 15.5

LOAD FACTORS AND LOAD COMBINATIONS

Working Stress Design (WSD) Percentage of unit stress

Group 1: D + E + SC 100%
Group 2: D + W + SC + E 100%
Group 3: D + 0.71 EQD + E 100%

Where:

D = Dead load
E = Lateral earth pressure
SC = Live load surcharge
W = Wind load
EQD = Seismic dead load

Load Factor Design (LFD)

Group A: BD +1.7 E + 1.7 SC
Group B: BD +1.7 E + 1.3 W
Group C: BD +1.3 E + 1.0 EQE
Group D: BD +1.3 E + 1.0 EQD
Group E: BD +1.1 E + 0.85 (EQE + EQD)

Where : β = 0.9 or 1.2, whichever controls in design
D = Dead load
E = Lateral earth pressure
SC = Live load surcharge
W = Wind load
EQD = Seismic dead load
EQE = Seismic earth load

STRENGTH REDUCTION FACTORS, Ø

Reinforced concrete:
For flexure ---------- Ø=0.90
For shear ---------- Ø=0.85

Concrete masonry:
For flexure ---------- Ø=0.80
For shear ---------- Ø=0.60

Foundations :

See "RETAINING WALL DETAILS" sheets.

STANDARD DRAWING

FILE NO. xs15-130-2e

APPROVED BY T SATTER — RESPONSIBLE TECHNICAL SPECIALIST
APPROVAL DATE 4-15-08

RELEASED BY ROBERTO LACALLE — RESPONSIBLE OFFICE CHIEF
RELEASE DATE 4-15-08

◇1 Removed clearance detail. Added aesthetics details
◇2 Added fractured rib texture detail
◇3 Revised barrier section

STATE OF CALIFORNIA
DEPARTMENT OF TRANSPORTATION

DIVISION OF ENGINEERING SERVICES

CU
EA

BRIDGE NO.
58E0078; 58E0079
58E0080; 58E0081
58E0085; 58E0086
POST MILE
VARIES

SOUNDWALL - MASONRY BLOCK WITH BARRIER ON RETAINING WALL

DETAILS NO. 2

DS OSD 2147A (ENGLISH STANDARD DRAWING "XS" BORDER REV. 01/11/08)

ORIGINAL SCALE IN INCHES FOR REDUCED PLANS 0 1 2 3

DISREGARD PRINTS BEARING EARLIER REVISION DATES →

REVISION DATES (PRELIMINARY STAGE ONLY)

SHEET 23 OF 83

USERNAME => trmartin

55e-538-u-miscdt02.dgn

DATE PLOTTED => 17-DEC-2009 TIME PLOTTED => 08:08:48

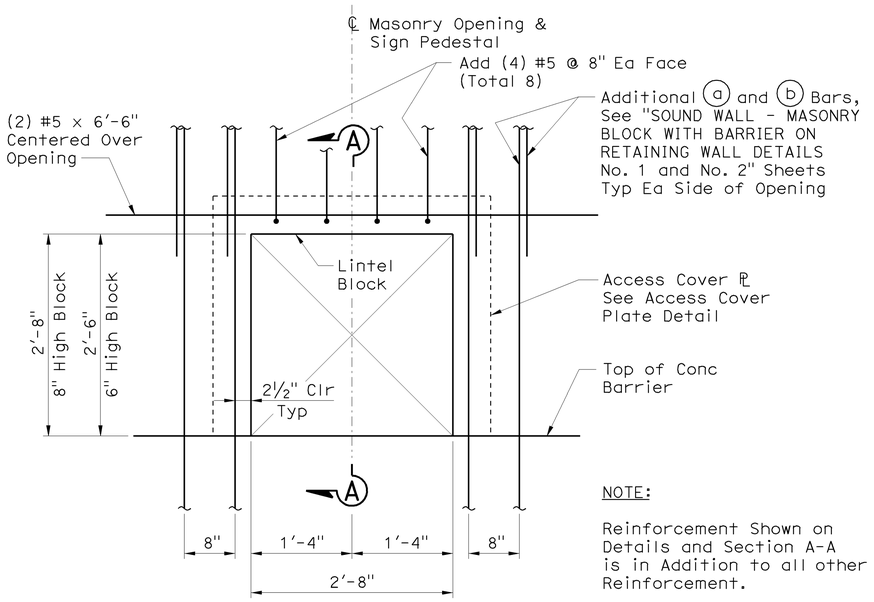

NOTE:

Reinforcement Shown on Details and Section A-A is in Addition to all other Reinforcement.

SOUND WALL ACCESS OPENING DETAIL

1" = 1'-0"

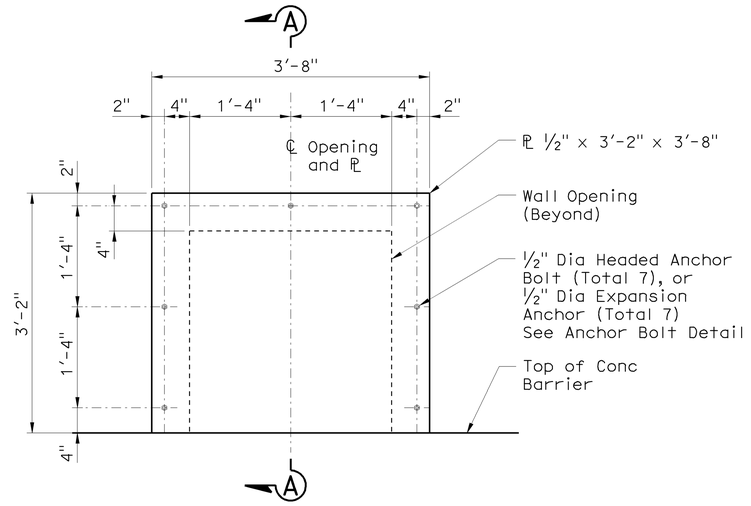

ACCESS COVER PLATE DETAIL

1" = 1'-0"

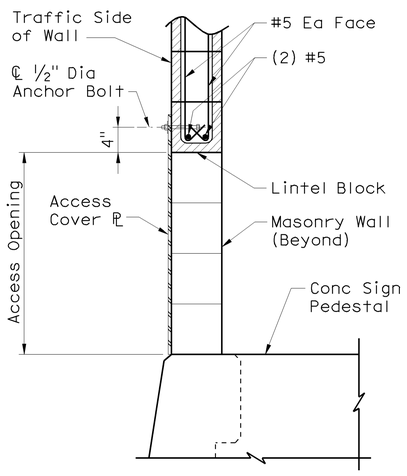

SECTION A-A

1" = 1'-0"

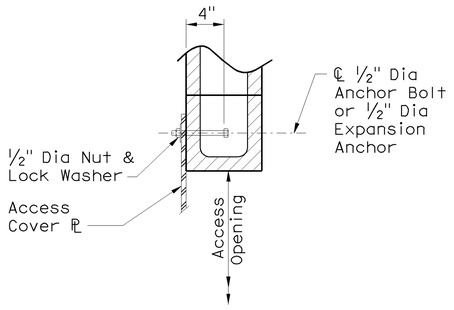

ANCHOR BOLT DETAIL

NO SCALE

NOTE:
Reinforcing Shown is in Addition to all other Reinforcement.

SECTION B-B

ELEVATION AT BACK OF WALL

BARRIER AT ACCESS GATE DETAIL

½" = 1'-0"

NOTE:
THE CONTRACTOR SHALL VERIFY ALL CONTROLLING FIELD DIMENSIONS BEFORE ORDERING OR FABRICATING ANY MATERIAL.

DIST	COUNTY	ROUTE	POST MILES TOTAL PROJECT	SHEET No	TOTAL SHEETS
12	Ora	57	16.2/18.6	486	960

REGISTERED CIVIL ENGINEER — 06/17/09 DATE

12-14-09
PLANS APPROVAL DATE

Chad W Harden No. 67648 Exp. 06/30/11 CIVIL — REGISTERED PROFESSIONAL ENGINEER — STATE OF CALIFORNIA

The State of California or its officers or agents shall not be responsible for the accuracy or completeness of electronic copies of this plan sheet.

OCTA
550 S MAIN STREET
ORANGE, CA 92868

RBF CONSULTING
14725 ALTON PKWY
IRVINE, CA 92618

DESIGN	BY Chad Harden	CHECKED Kevin Burke	
DETAILS	BY Gerald Fetters	CHECKED Chad Harden	
QUANTITIES	BY Kelly Gillis	CHECKED Chad Harden	

PREPARED FOR THE STATE OF CALIFORNIA DEPARTMENT OF TRANSPORTATION

Jon Hamaguchi
DESIGN OVERSIGHT Jon Hamaguchi
6-24-09
SIGN OFF DATE

Chad W. Harden
PROJECT ENGINEER

BRIDGE NO. 55E0078; 55E0079; 55E0082; 55E0083; 55E0084; 55E0085; 55E0086
POST MILE VARIES

SOUNDWALL - MASONRY BLOCK WITH BARRIER ON RETAINING WALL
DETAILS No. 3

DESIGN DETAIL SHEET (ENGLISH) (REV. 2/25/05)

ORIGINAL SCALE IN INCHES FOR REDUCED PLANS 0 1 2 3

CU 12
EA 0F0311

DISREGARD PRINTS BEARING EARLIER REVISION DATES →

REVISION DATES (PRELIMINARY STAGE ONLY): 2/13/09 4/6/09 6/17/09

SHEET 24 OF 83

FILE => 55e-538-u-miscdt03.dgn

USERNAME => ttmorrin DATE PLOTTED => 17-DEC-2009 TIME PLOTTED => 09:48

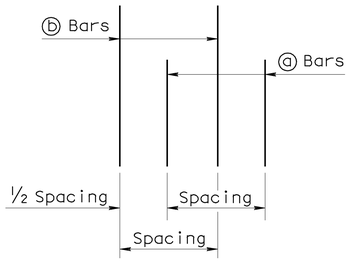

DETAIL A
NO SCALE

GENERAL NOTES:

1. For soundwall and retaining wall architectural finish or texture, see details elsewhere in project plans.
2. For details not shown and drainage notes, see B3-8
3. Footing cover, 1'-6" minimum.
4. Limit of no splicing rebars = 3 times the bottom thickness of the stem.
5. Placement of reinforcements :
   - ⓑ & ⓒ bars are spliced together.
   - ✳ ⓐ & ⓑ bars are bundled together.
   - ✳✳ Alternate ⓐ & ⓑ bars are shown in "Detail A".
   - Cont = Continuous.
6. For Sound Wall & Barrier reinforcement, see "Soundwall - Masonry Block with Barrier on Retaining Wall - Details No. 1 and No. 2" sheets.
7. For plain concrete band height see structure plan sheets.

TABLE 1: TABLE OF REINFORCING STEEL DIMENSIONS AND DATA

	STEM WITH HAUNCH								
Design H	6'	8'	10'	12'	14'	16'	18'	20'	22'
W	7'-9"	8'-3"	8'-9"	9'-9"	10'-9"	12'-0"	13'-0"	14'-3"	15'-3"
C	2'-9"	3'-0"	3'-0"	3'-3"	3'-6"	4'-0"	4'-3"	4'-9"	5'-0"
B	5'-0"	5'-3"	5'-9"	6'-6"	7'-3"	8'-0"	8'-9"	9'-6"	10'-3"
F Spread footing	1'-3"	1'-3"	1'-3"	1'-3"	1'-3"	1'-6"	1'-6"	1'-9"	2'-0"
Batter	½:12	½:12	½:12	½:12	½:12	½:12	½:12	½:12	½:12
Stem thickn. @ Haunch	1'-0"	1'-0"	1'-0"	1'-0"	1'-0"	1'-0"	1'-0"	1'-0"	1'-0"
ⓐ Bars			#7 @18✳✳	#7 @18✳✳	#8 @18✳✳	#9 @18✳✳	#7 @ 9✳✳	#8 @ 9✳✳	#9 @ 9✳
X			Cont	Cont	Cont	Cont	Cont	Cont	Cont
Y			9'-8"	9'-0"	11'-2"	10'-10"	9'-0"	9'-8"	10'-8"
ⓑ Bars	#6 @12	#6 @ 9	#6 @18	#7 @18✳✳	#7 @18✳✳	#8 @18✳✳	#7 @ 9✳✳	#8 @ 9✳✳	#9 @ 9✳
X	Cont	Cont	Cont	Cont	Cont	Cont	Cont	Cont	Cont
Y	Cont	Cont	Cont	Cont	14'-2"	16'-6"	18'-3"	20'-6"	22'-10"
ⓒ Bars					#6 @18	#6 @18	#6 @18	#6 @18	#6 @18
ⓓ Bars	#5 @12	#5 @12	#5 @ 9	#6 @ 9	#7 @ 9	#8 @ 9	#9 @ 9	#10 @ 9	#10 @ 9

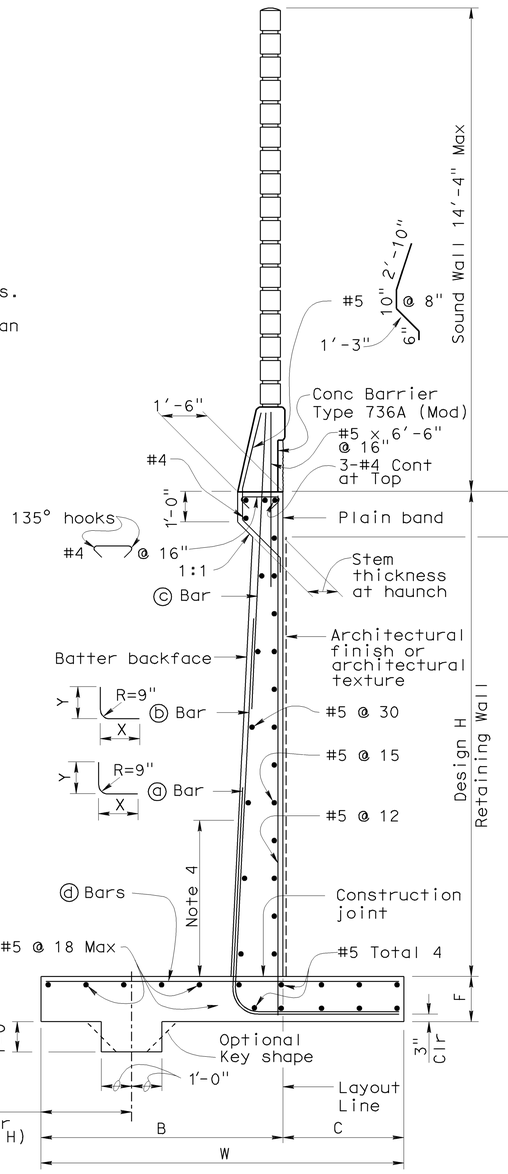

SPREAD FOOTING SECTION
NO SCALE

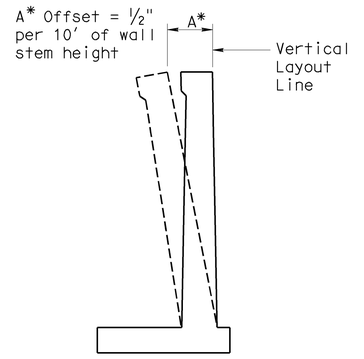

WALL OFFSET
NO SCALE

Values for offsetting forms to be determined by the Engineer.

DESIGN DATA

DESIGN: Load Factor Design (LFD)

CONCRETE: Reinforced Concrete, f'c = 3600 psi
fy = 60,000 psi

LOADING CASE:
Level ground with 240 psf surcharge and 14'-4" Soundwall

Seismic Load	= 0.3 Dead Load
Wind Load	= 30 psf
Dead Load of Sound Wall	= 1090 lb/ft
Dead Load of Barrier	= 489 lb/ft

SEISMIC LOAD: SOIL
Kh = 0.3g
Kv = 0.0
Kae : Mononobe-Okabe Method

SOIL: Ø = 34° γ = 120 pcf
Equivalent fluid pressure:
= 36 pcf for determination of toe pressure
= 27 pcf for determination of heel pressure

EXTERNAL STABILITY:
Group 1 : D + E + SC
Group 2 : D + E + SC + W
Group 3 : D + PYM/1.4
Additional Load Combinations per Caltrans Bridge Design Specifications

INTERNAL STABILITY (LFD):
Group A : βD + 1.7E + 1.7SC
Group B : βD + 1.7E + 1.3W
Group C (stem) : 1.0D + 1.0E + 1.0EQD + 1.0EQE
Group C (footing) : D + PYM
Additional Load Combinations per Caltrans Bridge Design Specifications

Where : β = 1.0 or 1.3 whichever controls design
D = Dead Load
E = Lateral Earth Pressure
SC = Surcharge
W = Wind load
EQD = Seismic Dead Load
EQE = Seismic Lateral Earth Pressure
PYM = Probable Yield Moment (1.3 x Nominal Yield Moment of Stem)

NOTE:
THE CONTRACTOR SHALL VERIFY ALL CONTROLLING FIELD DIMENSIONS BEFORE ORDERING OR FABRICATING ANY MATERIAL.

DIST	COUNTY	ROUTE	POST MILES TOTAL PROJECT	SHEET No	TOTAL SHEETS
12	Ora	57	16.2/18.6	487	960

REGISTERED CIVIL ENGINEER — DATE 06/17/09

Chad W Harden No. 67648 Exp. 06/30/11 CIVIL — REGISTERED PROFESSIONAL ENGINEER — STATE OF CALIFORNIA

12-14-09
PLANS APPROVAL DATE

The State of California or its officers or agents shall not be responsible for the accuracy or completeness of electronic copies of this plan sheet.

OCTA
550 S MAIN STREET
ORANGE, CA 92868

RBF CONSULTING
14725 ALTON PKWY
IRVINE, CA 92618

Jon Hamaguchi
DESIGN OVERSIGHT Jon Hamaguchi

6-24-09
SIGN OFF DATE

	BY	CHECKED
DESIGN	Chad Harden	Kevin Burke
DETAILS	Gerald Fetters	Chad Harden
QUANTITIES	Kelly Gillis	Chad Harden

PREPARED FOR THE STATE OF CALIFORNIA DEPARTMENT OF TRANSPORTATION

Chad W. Harden
PROJECT ENGINEER

BRIDGE NO. 55E0078 55E0079 55E0080 55E0082 55E0084 55E0085 55E0086
POST MILE VARIES

RETAINING WALL DETAILS
RETAINING WALL TYPE 1SWB

DESIGN DETAIL SHEET (ENGLISH) (REV. 2/25/05)

ORIGINAL SCALE IN INCHES FOR REDUCED PLANS 0 1 2 3

CU 12
EA 0F0311

DISREGARD PRINTS BEARING EARLIER REVISION DATES

REVISION DATES (PRELIMINARY STAGE ONLY): 2/13/09 4/6/09 6/17/09

SHEET 25 OF 83

FILE => 55e-538-u-miscdt04.dgn

USERNAME => ttmartin DATE PLOTTED => 17-DEC-2009 TIME PLOTTED => 09:48

DIST	COUNTY	ROUTE	POST MILES TOTAL PROJECT	SHEET No	TOTAL SHEETS
12	Ora	57	16.2/18.6	488	960

REGISTERED CIVIL ENGINEER — 06/17/09 DATE

12-14-09
PLANS APPROVAL DATE

REGISTERED PROFESSIONAL ENGINEER — Chad W Harden — No. 67648 — Exp. 06/30/11 — CIVIL — STATE OF CALIFORNIA

The State of California or its officers or agents shall not be responsible for the accuracy or completeness of electronic copies of this plan sheet.

OCTA
550 S MAIN STREET
ORANGE, CA 92868

RBF CONSULTING
14725 ALTON PKWY
IRVINE, CA 92618

TABLE OF PILE SPACING: CLASS 45 - STEEL PILES AND CONCRETE PILES (ALT-X)		
DESIGN H	12′	16′
W	8′-3"	10′-3"
C	3′-3"	4′-0"
B	5′-0"	6′-3"
F	2′-0"	2′-6"
M	1′-9"	2′-6"
N	3′-6"	4′-9"
ROW 1	7′-0"	4′-6"
ROW 2	14′-0"	9′-0"
CONFIGURATION	I	I

TABLE 1: TABLE OF REINFORCING STEEL DIMENSIONS AND DATA		
	STEM WITH HAUNCH	
DESIGN H	12′	16′
STEM BATTER	½:12	½:12
STEM THICKNESS @ TOP	1′-6"	1′-6"
STEM THICKNESS @ HAUNCH	1′-0"	1′-0"
ⓐ BARS	#7@18 XX	#9@18 XX
X	CONT	CONT
Y	9′-6"	11′-8"
ⓑ BARS	#7@18 XX	#8@18 XX
X	CONT	CONT
Y	12′-6"	17′-2"
ⓒ BARS		#6 @ 18
ⓓ BARS	#8 @ 12	#9 @ 12
TOTAL ⓔ BARS	6 #5	8 #5
TOTAL ⓕ BARS	6 #5	8 #5
ⓖ BARS	#6 @ 18	#8 @ 18

CONT = CONTINUOUS

* = ⓐ AND ⓑ BARS ARE BUNDLED TOGETHER.

~~XX~~ = ALTERNATE ⓐ AND ⓑ BARS AS SHOWN IN DETAIL A.

DESIGN DATA

DESIGN: LOAD FACTOR DESIGN (LFD)

CONCRETE: REINFORCED CONCRETE, f′c = 3600 psi
fy = 60000 psi

LOADING CASE:

LEVEL GROUND WITH 240 psf LIVE LOAD SURCHARGE AND 14′-4" SOUNDWALL.
SEISMIC LOAD = 0.30 DEAD LOAD
WIND LOAD = 30 psf
DEAD LOAD OF SOUND WALL = 1090 lb/lf
DEAD LOAD OF BARRIER = 489 lb/lf

SEISMIC LOAD: SOIL

Kh = 0.3g
Kv = 0.0
Kae : MONONOBE-OKABE METHOD

SOIL: Ø = 34° γ = 120 pcf

EQUIVALENT FLUID PRESSURE:
= 36 pcf FOR DETERMINATION OF TOE PRESSURE
= 27 pcf FOR DETERMINATION OF HEEL PRESSURE

LOAD COMBINATIONS:

EXTERNAL STABILITY:
Group 1: D + PYM/1.4
Additional Load Combinations per Caltrans Bridge Design Specifications

INTERNAL STABILITY:
GROUP A : βD+1.7E+1.7SC
GROUP B : βD+1.7E+1.7SC+W
GROUP C :
STEM : 1.0D+1.0E+1.0EQD+1.0EQE
FOOTING : D+PYM
Additional Load Combinations per Caltrans Bridge Design Specifications

WHERE : β = 1.0 OR 1.3 WHICHEVER CONTROLS DESIGN
D = DEAD LOAD
E = LATERAL EARTH PRESSURE
SC = SURCHARGE
W = WIND LOAD
EQD = SEISMIC DEAD LOAD
EQE = SEISMIC LATERAL EARTH PRESSURE
PYM = PROBABLE YIELD MOMENT (1.3* NOMINAL YIELD MOMENT OF STEM)

GENERAL NOTES:

1. CLASS 45-STEEL PILES AND CONCRETE PILES (ALT-X) WERE USED FOR THE DESIGN.
2. PILE BATTER SHOWN ARE 1:3.
3. MINIMUM DISTANCE BETWEEN CENTER PILE AND EDGE OF FOOTING IS 1′-6".
4. SEE FOUNDATION PLAN FOR NOMINAL PILE RESISTANCE.
5. MAXIMUM SPACING BETWEEN PILES IS SHOWN IN THE TABLE. REDUCE TO SUIT THE LENGHTH OF FOOTING.
6. MINIMUM DISTANCE BETWEEN ANY TWO PILES IS 3′-0".
7. LIMIT OF NO SPLICING FOR REBARS = 3 TIMES THE BOTTOM THICKNESS OF STEM.

NOTE:
THE CONTRACTOR SHALL VERIFY ALL CONTROLLING FIELD DIMENSIONS BEFORE ORDERING OR FABRICATING ANY MATERIAL.

DESIGN OVERSIGHT — Jon Hamaguchi
6-24-09
SIGN OFF DATE

	BY	CHECKED
DESIGN	Chad Harden	Kevin Burke
DETAILS	Gerald Fetters	Chad Harden
QUANTITIES	Kelly Gillis	Chad Harden

PREPARED FOR THE
STATE OF CALIFORNIA
DEPARTMENT OF TRANSPORTATION

Chad W. Harden
PROJECT ENGINEER

CU 12
EA 0F0311

BRIDGE NO.
55E0078, 55E0079
55E0082, 55E0083
55E0084, 55E0085
55E0086
POST MILE
VARIES

RETAINING WALL DETAILS
RETAINING WALL TYPE 1SWBP - DETAILS No. 1

DESIGN DETAIL SHEET (ENGLISH) (REV. 2/25/05)

ORIGINAL SCALE IN INCHES FOR REDUCED PLANS 0 1 2 3

DISREGARD PRINTS BEARING EARLIER REVISION DATES →

REVISION DATES (PRELIMINARY STAGE ONLY): 2/13/09 | 4/6/09 | 6/17/09

SHEET 26 OF 83

FILE => 55e-538-u-miscdt05.dgn

USERNAME => tmorton DATE PLOTTED => 17-DEC-2009 TIME PLOTTED => 09:48

DIST	COUNTY	ROUTE	POST MILES TOTAL PROJECT	SHEET No	TOTAL SHEETS
12	Ora	57	16.2/18.6	489	960

REGISTERED CIVIL ENGINEER — DATE 06/17/09

12-14-09
PLANS APPROVAL DATE

REGISTERED PROFESSIONAL ENGINEER — Chad W Harden — No. 67648 — Exp. 06/30/11 — CIVIL — STATE OF CALIFORNIA

The State of California or its officers or agents shall not be responsible for the accuracy or completeness of electronic copies of this plan sheet.

OCTA
550 S MAIN STREET
ORANGE, CA 92868

RBF CONSULTING
14725 ALTON PKWY
IRVINE, CA 92618

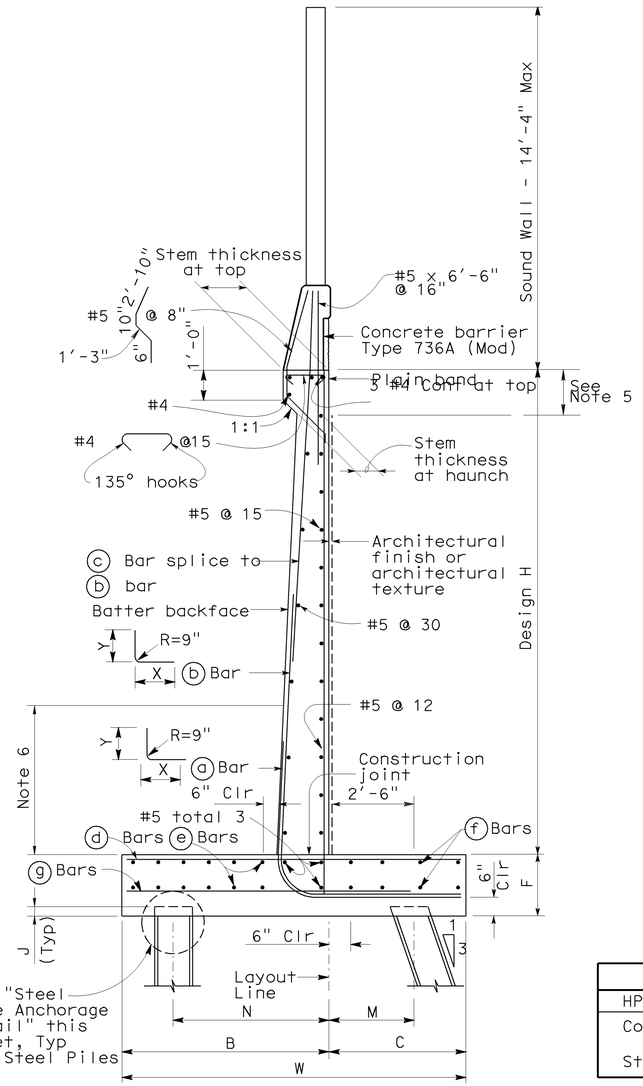

45T PILE FOOTING SECTION

NO SCALE

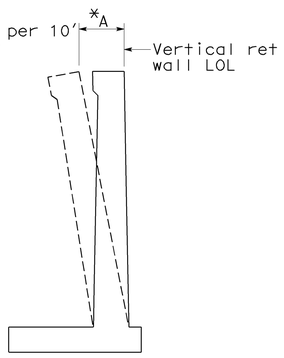

WALL OFFSET

NO SCALE

Values for offsetting forms to be determined by the engineer

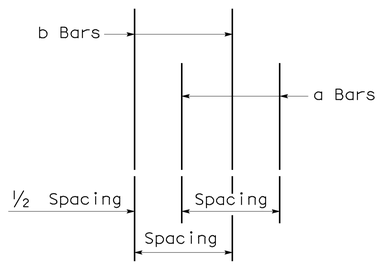

DETAIL A

NO SCALE

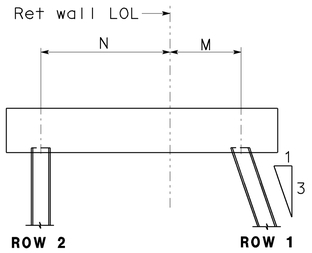

CONFIGURATION I

PILE TYPE	EMBEDMENT "J"
HP Steel Pile	5"
Concrete Pile (Alt-x) Std Plan B2-5	3"

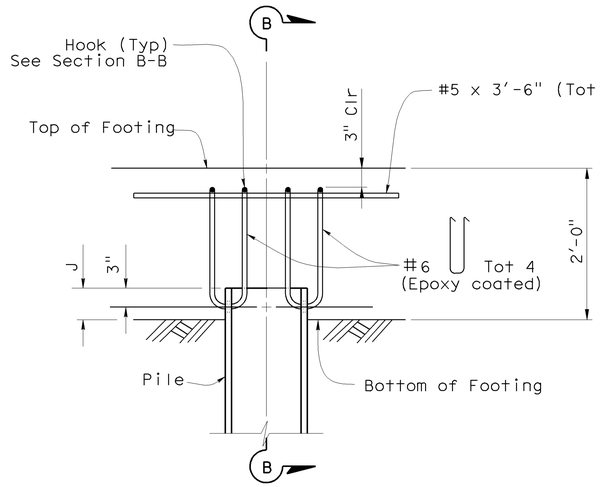

ELEVATION

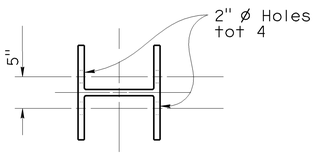

PLAN

(45 Ton Pile)
STEEL PILE ANCHORAGE DETAIL

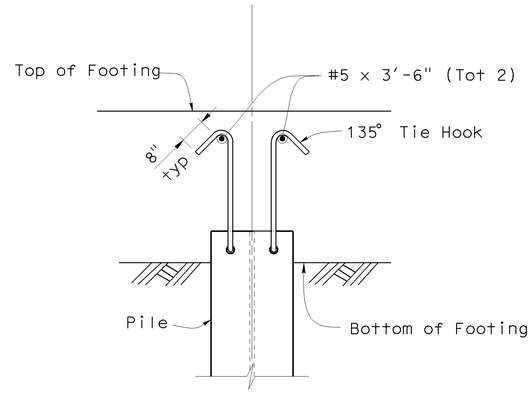

SECTION B-B

NOTES:

1. For Sound Wall and retaining wall architectural finish or texture, see details elsewhere in project plans.
2. For details not shown and drainage notes, see B3-8
3. Footing cover, 1'-6" minimum.
4. For Sound Wall & Barrier reinforcement, see "Soundwall - Masonry Block with Barrier on Retaining Wall - Details No. 1 and No. 2" sheets.
5. For plain concrete band height see structure plan sheets.
6. Limit of no splicing for rebars = 3 times the bottom thickness of stem.

NOTE:
THE CONTRACTOR SHALL VERIFY ALL CONTROLLING FIELD DIMENSIONS BEFORE ORDERING OR FABRICATING ANY MATERIAL.

DESIGN OVERSIGHT — Jon Hamaguchi
6-24-09
SIGN OFF DATE

	BY	CHECKED
DESIGN	Chad Harden	Kevin Burke
DETAILS	Gerald Fetters	Chad Harden
QUANTITIES	Kelly Gillis	Chad Harden

PREPARED FOR THE STATE OF CALIFORNIA DEPARTMENT OF TRANSPORTATION

Chad W. Harden
PROJECT ENGINEER

CU 12
EA 0F0311

BRIDGE NO.
55E0078, 55E0079
55E0080, 55E0082
55E0083, 55E0085
55E0086

POST MILE
VARIES

RETAINING WALL DETAILS
RETAINING WALL TYPE 1SWBP - DETAILS No. 2

DISREGARD PRINTS BEARING EARLIER REVISION DATES →

REVISION DATES (PRELIMINARY STAGE ONLY): 2/13/09 | 4/6/09 | 6/17/09

SHEET 27 OF 83

DESIGN DETAIL SHEET (ENGLISH) (REV. 2/25/05)

ORIGINAL SCALE IN INCHES FOR REDUCED PLANS 0 1 2 3

FILE => 55e-538-u-miscdt06.dgn

USERNAME => ttmorrin DATE PLOTTED => 17-DEC-2009 TIME PLOTTED => 09:48

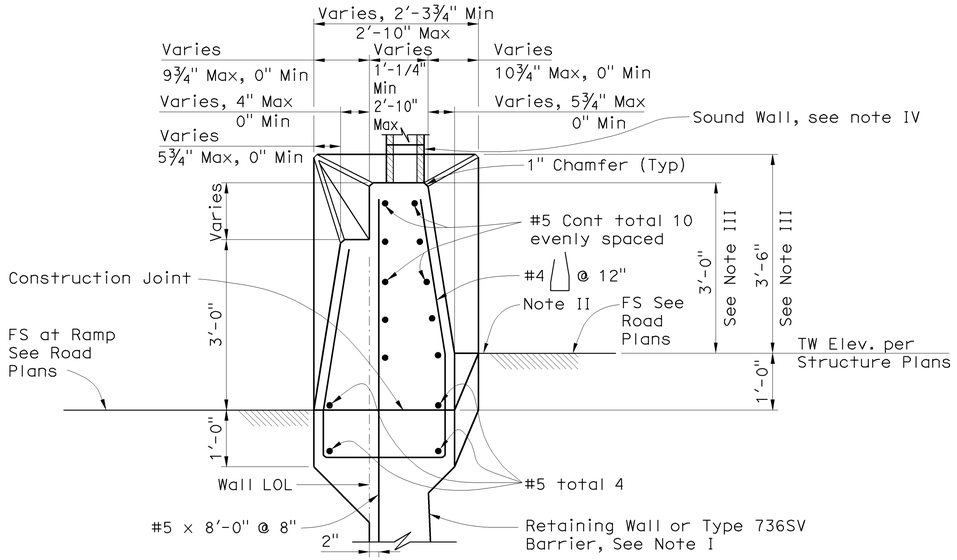

TYPE A BARRIER SECTION A-A

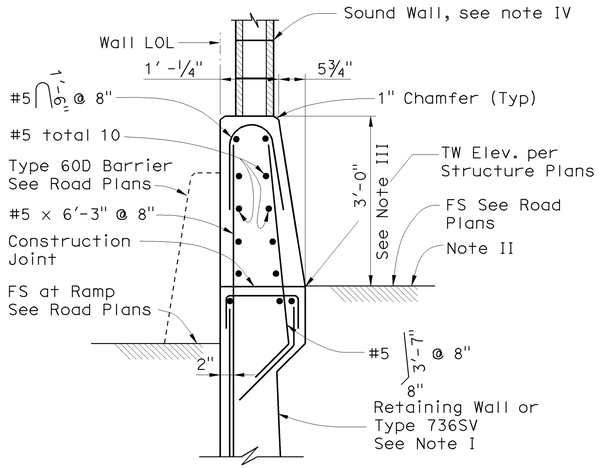

TYPE B BARRIER SECTION B-B

¾" = 1'-0"

DIST	COUNTY	ROUTE	POST MILES TOTAL PROJECT	SHEET No	TOTAL SHEETS
12	Ora	57	16.2/18.6	490	960

REGISTERED CIVIL ENGINEER — DATE 06/17/09

12-14-09
PLANS APPROVAL DATE

REGISTERED PROFESSIONAL ENGINEER — Chad W Harden No. 67648 Exp. 06/30/11 CIVIL — STATE OF CALIFORNIA

The State of California or its officers or agents shall not be responsible for the accuracy or completeness of electronic copies of this plan sheet.

OCTA
550 S MAIN STREET
ORANGE, CA 92868

RBF CONSULTING
14725 ALTON PKWY
IRVINE, CA 92618

NOTES:

I. Reinforcement shown is in addition to all other reinforcement, see "RETAINING WALL DETAILS" sheets.

II. Slope ground at traffic side of barrier to drain. Maximum slope ±10%. See Standard Plan B11-56, Note D.

III. Dimension may vary with roadway cross slope, and with certain thickness of surfacing.

IV. For Sound Wall details and reinforcement see "SOUNDWALL-MASONRY BLOCK WITH BARRIER ON RETAINING WALL-DETAILS No. 1 AND No. 2" sheets.

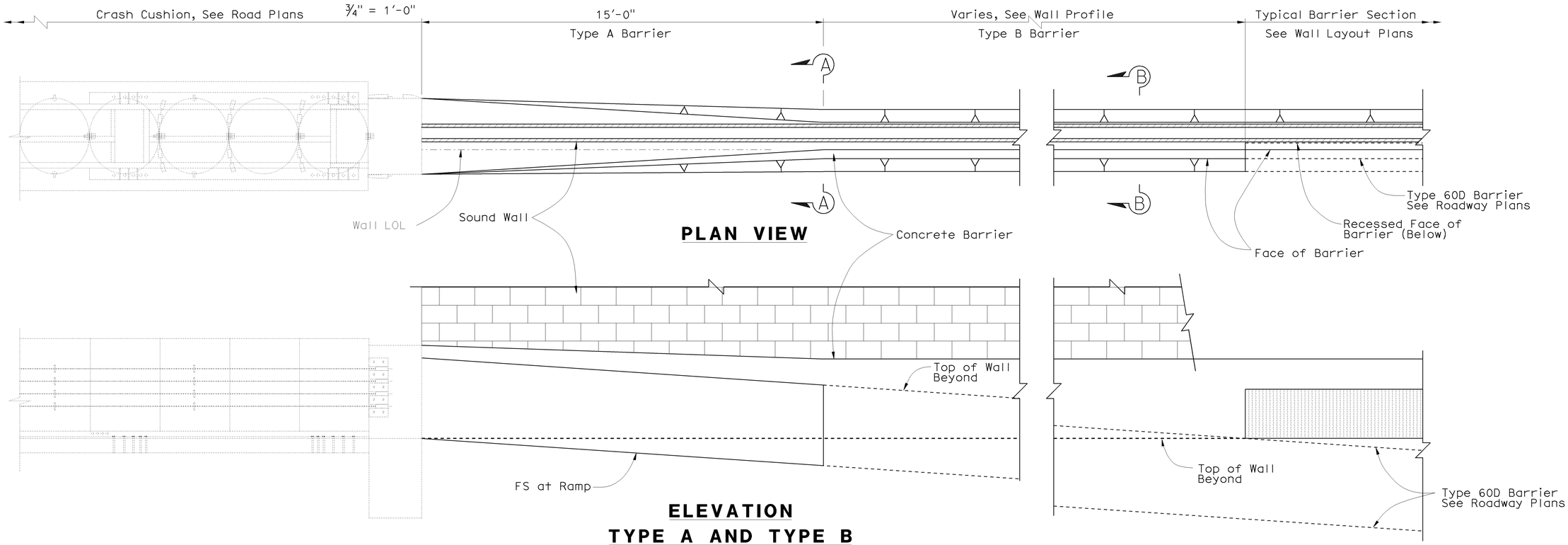

PLAN VIEW

ELEVATION
TYPE A AND TYPE B
TRANSITION BARRIER DETAIL

½" = 1'-0"

NOTE:
THE CONTRACTOR SHALL VERIFY ALL CONTROLLING FIELD DIMENSIONS BEFORE ORDERING OR FABRICATING ANY MATERIAL.

Jon Hamaguchi
DESIGN OVERSIGHT Jon Hamaguchi

6-24-09
SIGN OFF DATE

DESIGN DETAIL SHEET (ENGLISH) (REV. 2/25/05)

	BY	CHECKED
DESIGN	Chad Harden	Kevin Burke
DETAILS	Gerald Fetters	Chad Harden
QUANTITIES	Kelly Gillis	Chad Harden

PREPARED FOR THE STATE OF CALIFORNIA DEPARTMENT OF TRANSPORTATION

Chad W. Harden
PROJECT ENGINEER

ORIGINAL SCALE IN INCHES FOR REDUCED PLANS 0 1 2 3

CU 12
EA 0F0311

BRIDGE NO.
58E0078;58E0079
58E0080;58E0082
58E0083;58E0085
58E0086

POST MILE
VARIES

DISREGARD PRINTS BEARING EARLIER REVISION DATES →

RETAINING WALL DETAILS
TYPE A AND TYPE B BARRIER DETAILS

REVISION DATES (PRELIMINARY STAGE ONLY): 2/13/09 5/6/09 6/17/09

SHEET 28 OF 83

FILE => 55e-538-u-miscdt07.dgn

USERNAME => tmiller1 DATE PLOTTED => 17-DEC-2009 TIME PLOTTED => 07:40

DIST	COUNTY	ROUTE	POST MILES TOTAL PROJECT	SHEET No	TOTAL SHEETS
12	Ora	57	16.2/18.6	491	960

REGISTERED CIVIL ENGINEER — 06/17/09 DATE

12-14-09
PLANS APPROVAL DATE

REGISTERED PROFESSIONAL ENGINEER — Chad W Harden — No. 67648 — Exp. 06/30/11 — CIVIL — STATE OF CALIFORNIA

The State of California or its officers or agents shall not be responsible for the accuracy or completeness of electronic copies of this plan sheet.

OCTA
550 S MAIN STREET
ORANGE, CA 92868

RBF CONSULTING
14725 ALTON PKWY
IRVINE, CA 92618

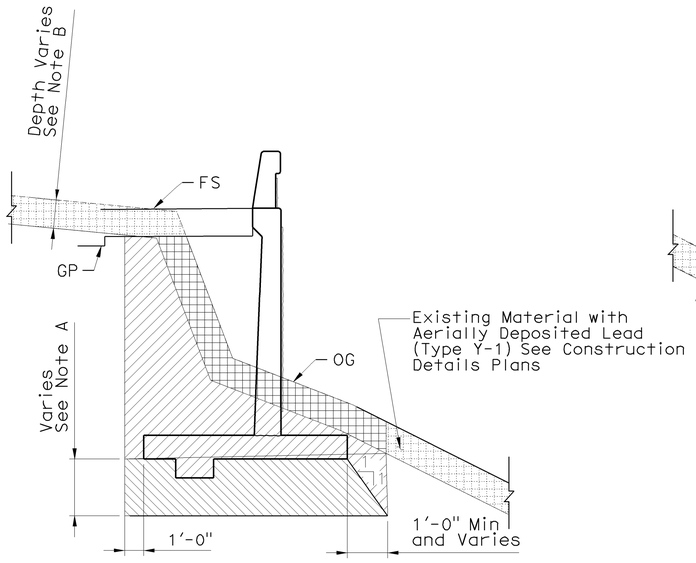

EXCAVATION
NO SCALE

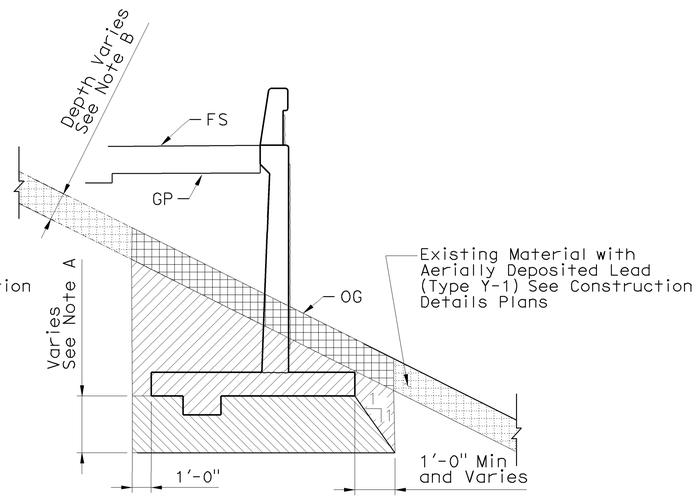

EXCAVATION
NO SCALE

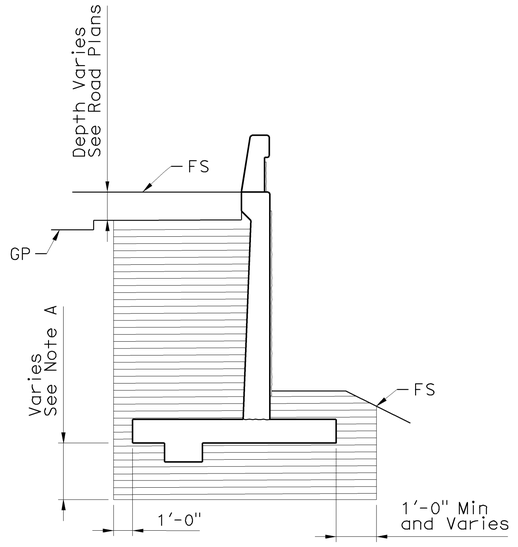

BACKFILL
NO SCALE

RETAINING WALL IN FILL AND CUT

LIMITS OF PAVEMENT FOR RETAINING WALL EXCAVATION AND BACKFILL

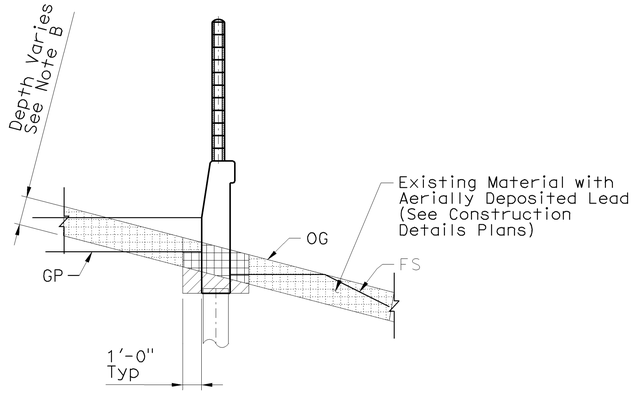

EXCAVATION
NO SCALE

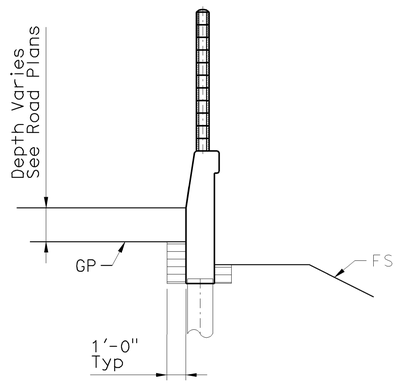

BACKFILL
NO SCALE

LEGEND:

- Structure Excavation
- Structure Backfill
- Structure Overexcavation See Note A
- Structure Excavation (Type Y-1) (Aerially Deposited Lead)

NOTES

A. For Depth of Structure Overexcavation, See Retaining Wall Typical Section(s).

B. For Depth of Existing Material with Aerially Deposited Lead, See Retaining Wall Typical Section(s).

NOTE:
THE CONTRACTOR SHALL VERIFY ALL CONTROLLING FIELD DIMENSIONS BEFORE ORDERING OR FABRICATING ANY MATERIAL.

DESIGN OVERSIGHT

SIGN OFF DATE

	BY	CHECKED
DESIGN	Chad Harden	Kevin Burke
DETAILS	Gerald Fetters	Chad Harden
QUANTITIES	Kelly Gillis	Chad Harden

PREPARED FOR THE STATE OF CALIFORNIA
DEPARTMENT OF TRANSPORTATION

Chad W. Harden
PROJECT ENGINEER

CU 12
EA 0F0311

BRIDGE NO.
POST MILE
VARIES

RETAINING WALL DETAILS

LIMITS OF PAYMENT FOR EXCAVATION AND BACKFILL

DESIGN DETAIL SHEET (ENGLISH) (REV. 2/25/05)

ORIGINAL SCALE IN INCHES FOR REDUCED PLANS 0 1 2 3

DISREGARD PRINTS BEARING EARLIER REVISION DATES →

REVISION DATES (PRELIMINARY STAGE ONLY): 2/13/09 | 5/6/09 | 6/17/09

SHEET 29 OF 83

FILE => 55e-538-u-miscdt08.dgn

USERNAME => rmitkes1 DATE PLOTTED => 17-DEC-2009 TIME PLOTTED => 07:40

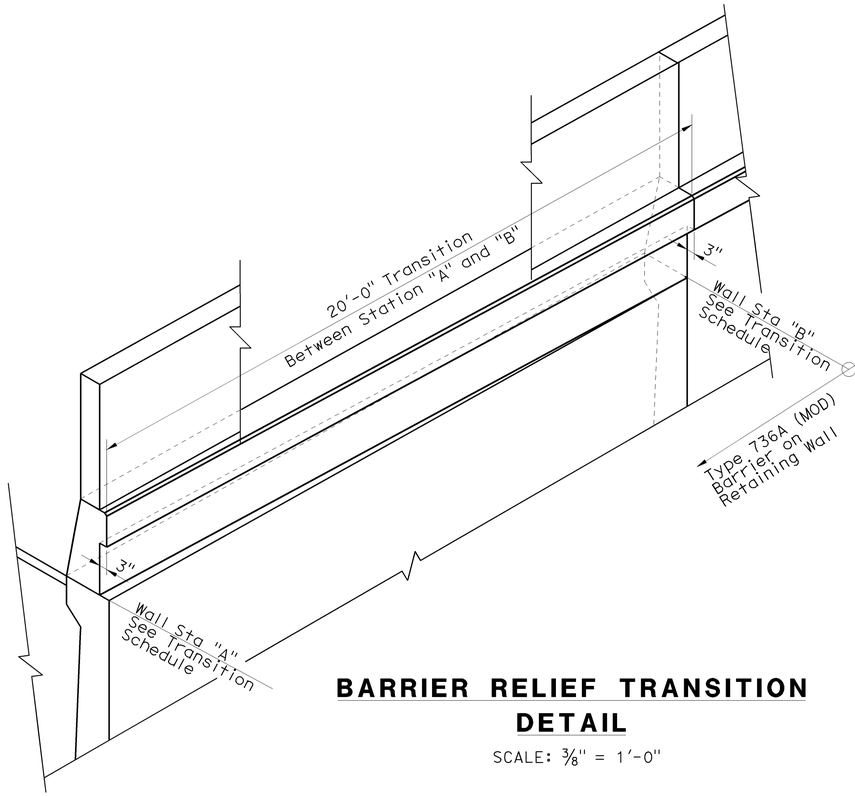

BARRIER RELIEF TRANSITION DETAIL

SCALE: 3/8" = 1'-0"

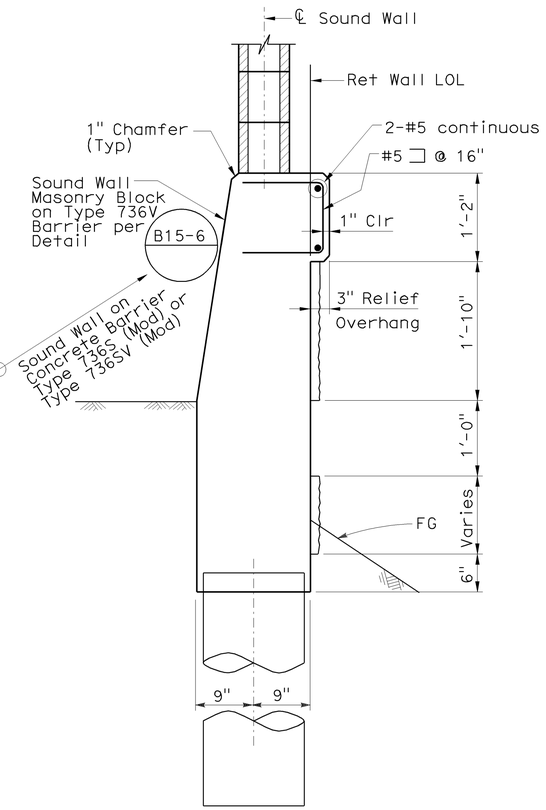

TYPE 736SV (Mod) BARRIER

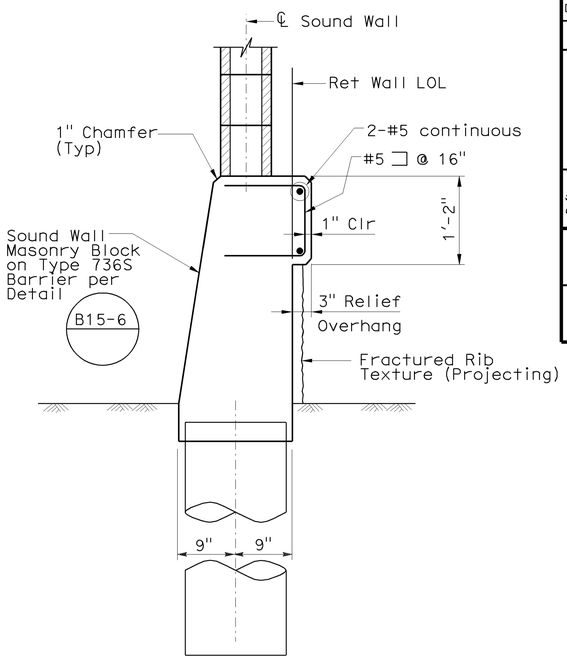

TYPE 736S (Mod) BARRIER

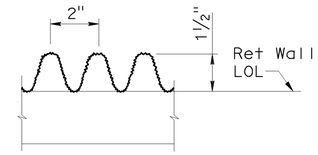

FRACTURED RIB DETAIL (PROJECTING)

No Scale

DIST	COUNTY	ROUTE	POST MILES TOTAL PROJECT	SHEET No	TOTAL SHEETS
12	Ora	57	16.2/18.6	492	960

REGISTERED CIVIL ENGINEER — 06/17/09 DATE

Chad W Harden No. 67648 Exp. 06/30/11 CIVIL — REGISTERED PROFESSIONAL ENGINEER — STATE OF CALIFORNIA

12-14-09
PLANS APPROVAL DATE

The State of California or its officers or agents shall not be responsible for the accuracy or completeness of electronic copies of this plan sheet.

OCTA
550 S MAIN STREET
ORANGE, CA 92868

RBF CONSULTING
14725 ALTON PKWY
IRVINE, CA 92618

Transition Schedule

Wall No.	Sta "A"	Sta "B"
462	16+12.00	16+32.00
466	15+40.00	15+20.00
474	13+00.00	13+20.00
526	14+80.00	15+00.00
526	17+71.97	17+56.00
536	10+02.00	10+18.00
538	10+68.00	10+48.00
538	16+68.00	16+88.00

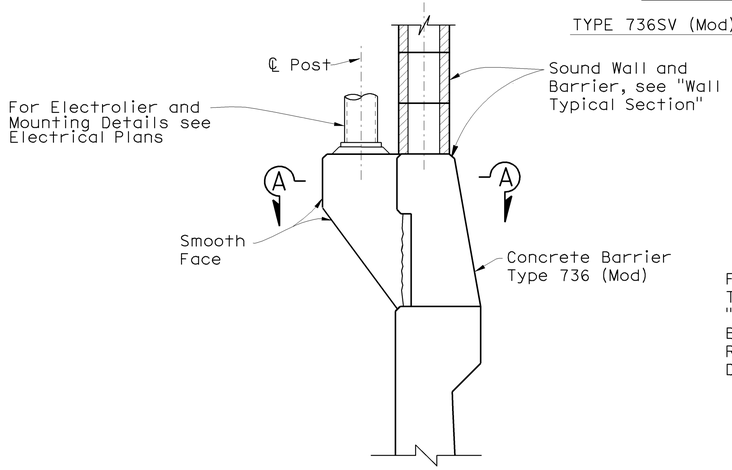

ELEVATION

NOTE: For additional information, see B11-56

ELECTROLIER PEDESTAL ON RETAINING WALL

No Scale

BARRIER RELIEF DETAIL

1" = 1'-0"

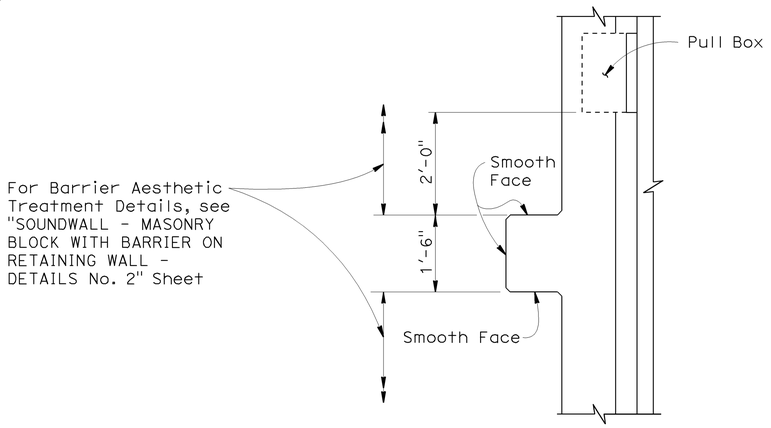

SECTION A-A

No Scale

NOTE:
THE CONTRACTOR SHALL VERIFY ALL CONTROLLING FIELD DIMENSIONS BEFORE ORDERING OR FABRICATING ANY MATERIAL.

Jon Hamaguchi
DESIGN OVERSIGHT Jon Hamaguchi
6-24-09
SIGN OFF DATE

	BY	CHECKED
DESIGN	Chad Harden	Kevin Burke
DETAILS	Gerald Fetters	Chad Harden
QUANTITIES	Kelly Gillis	Chad Harden

PREPARED FOR THE STATE OF CALIFORNIA DEPARTMENT OF TRANSPORTATION

Chad W. Harden
PROJECT ENGINEER

BRIDGE NO. 55E0078,55E0079, 55E0080,55E0082, 55E0083,55E0085, 55E0086
POST MILE VARIES

SOUND WALL ON RETAINING WALL DETAILS
MISCELLANEOUS DETAILS No. 1

DESIGN DETAIL SHEET (ENGLISH) (REV. 2/25/05)

ORIGINAL SCALE IN INCHES FOR REDUCED PLANS 0 1 2 3

CU 12
EA 0F0311

DISREGARD PRINTS BEARING EARLIER REVISION DATES →

REVISION DATES (PRELIMINARY STAGE ONLY): 2/23/09 5/6/09 6/17/09

SHEET 30 OF 83

FILE => 55e-538-u-miscdt09.dgn

USERNAME = tmahesl DATE PLOTTED => 17-DEC-2009 TIME PLOTTED => 07:40

DIST	COUNTY	ROUTE	POST MILES TOTAL PROJECT	SHEET No	TOTAL SHEETS
12	Ora	57	16.2/18.6	493	960

REGISTERED CIVIL ENGINEER — 06/17/09 DATE

12-14-09
PLANS APPROVAL DATE

REGISTERED PROFESSIONAL ENGINEER — Chad W Harden, No. 67648, Exp. 06/30/11, CIVIL, STATE OF CALIFORNIA

The State of California or its officers or agents shall not be responsible for the accuracy or completeness of electronic copies of this plan sheet.

OCTA
550 S MAIN STREET
ORANGE, CA 92868

RBF CONSULTING
14725 ALTON PKWY
IRVINE, CA 92618

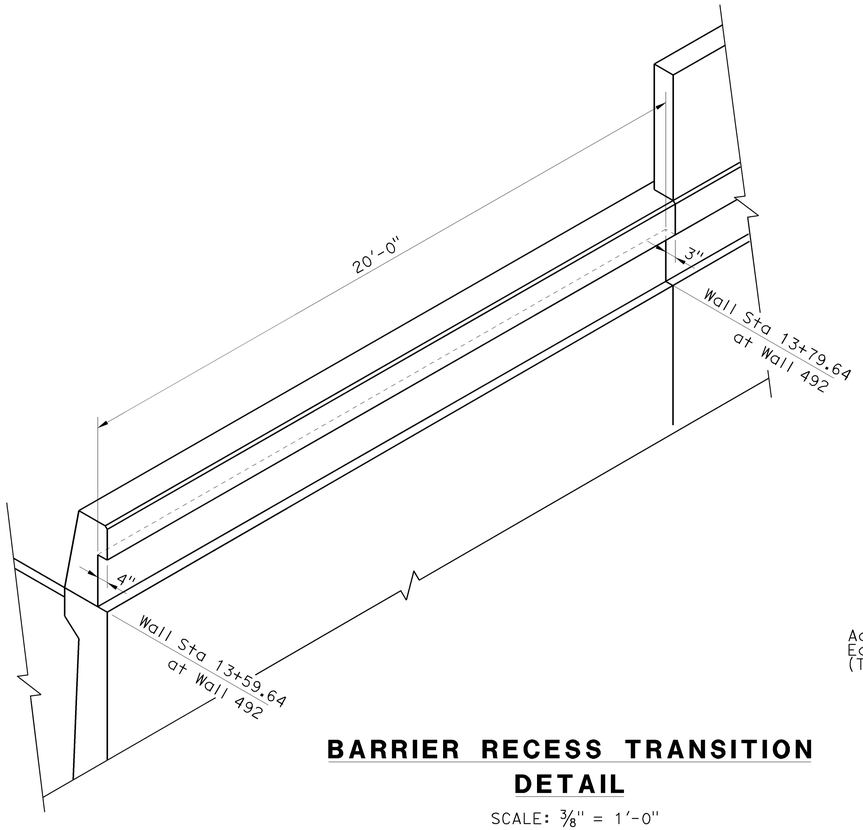

BARRIER RECESS TRANSITION DETAIL

SCALE: 3/8" = 1'-0"

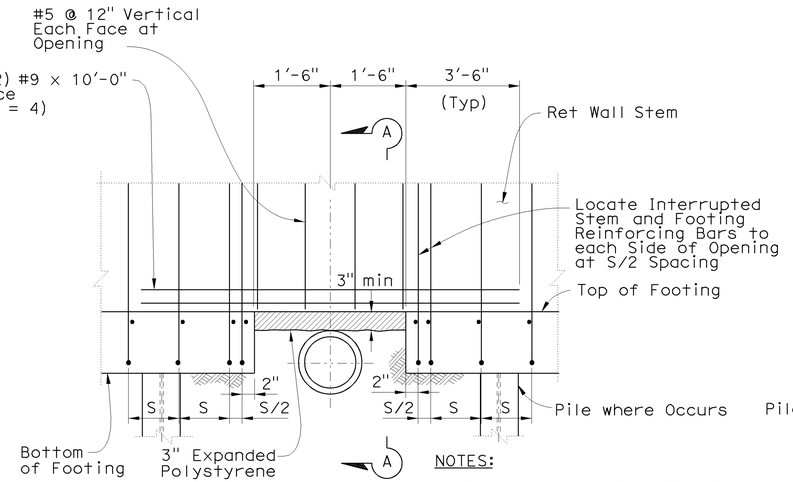

NOTES:

1. S = Typical Vertical Bar Spacing.
2. Do Not Splice Horizontal Wall Reinf Above Utility Bridge.

UTILITY BRIDGE OVER DETAIL

NO SCALE

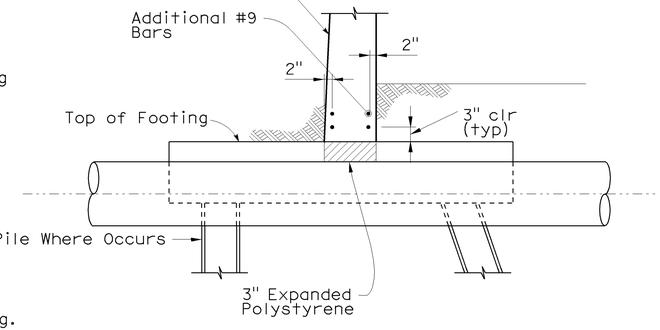

SECTION A-A

NO SCALE

NOTE:
THE CONTRACTOR SHALL VERIFY ALL CONTROLLING FIELD DIMENSIONS BEFORE ORDERING OR FABRICATING ANY MATERIAL.

Jon Hamaguchi
DESIGN OVERSIGHT — Jon Hamaguchi

6-24-09
SIGN OFF DATE

	BY	CHECKED
DESIGN	Chad Harden	Kevin Burke
DETAILS	Gerald Fetters	Chad Harden
QUANTITIES	Kelly Gillis	Chad Harden

PREPARED FOR THE STATE OF CALIFORNIA DEPARTMENT OF TRANSPORTATION

Chad W. Harden
PROJECT ENGINEER

BRIDGE NO.
55C0078, 55C0079
55C0080, 55C0082
55C0083, 55C0085
55C0086
POST MILE
VARIES

SOUND WALL ON RETAINING WALL DETAILS
MISCELLANEOUS DETAILS No. 2

DESIGN DETAIL SHEET (ENGLISH) (REV. 2/25/05)

ORIGINAL SCALE IN INCHES FOR REDUCED PLANS 0 1 2 3

CU 12
EA 0F0311

DISREGARD PRINTS BEARING EARLIER REVISION DATES →

REVISION DATES (PRELIMINARY STAGE ONLY): 2/13/09, 4/6/09, 6/17/09

SHEET 31 OF 83

FILE => 55e-538-u-miscdt10.dgn

USERNAME => tmmikes\ DATE PLOTTED => 17-DEC-2009 TIME PLOTTED => 07:40

DIST	COUNTY	ROUTE	POST MILES TOTAL PROJECT	SHEET No	TOTAL SHEETS
12	Ora	57	16.2/18.6	494	960

REGISTERED CIVIL ENGINEER 06/17/09 DATE

12-14-09
PLANS APPROVAL DATE

REGISTERED PROFESSIONAL ENGINEER Chad W Harden No. 67648 Exp. 06/30/11 CIVIL STATE OF CALIFORNIA

The State of California or its officers or agents shall not be responsible for the accuracy or completeness of electronic copies of this plan sheet.

OCTA
550 S MAIN STREET
ORANGE, CA 92868

RBF CONSULTING
14725 ALTON PKWY
IRVINE, CA 92618

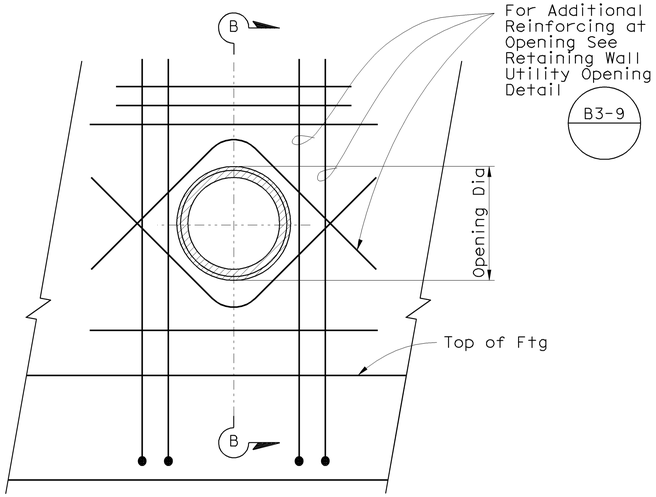

ELEVATION

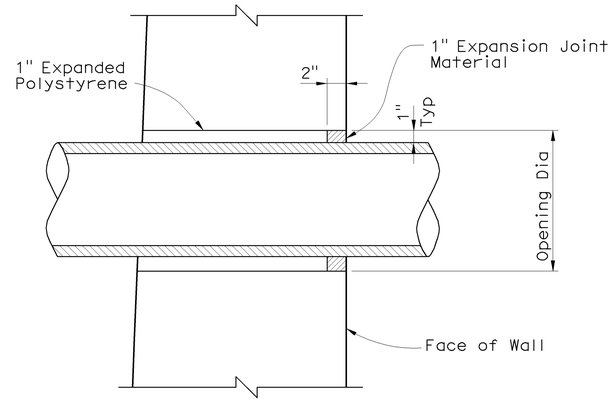

SECTION B-B

PIPE THROUGH WALL DETAIL

NO SCALE

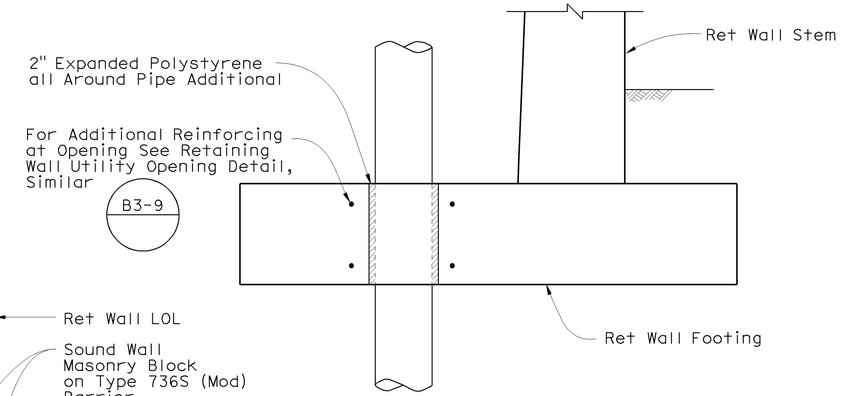

PIPE THROUGH HEEL DETAIL

NO SCALE

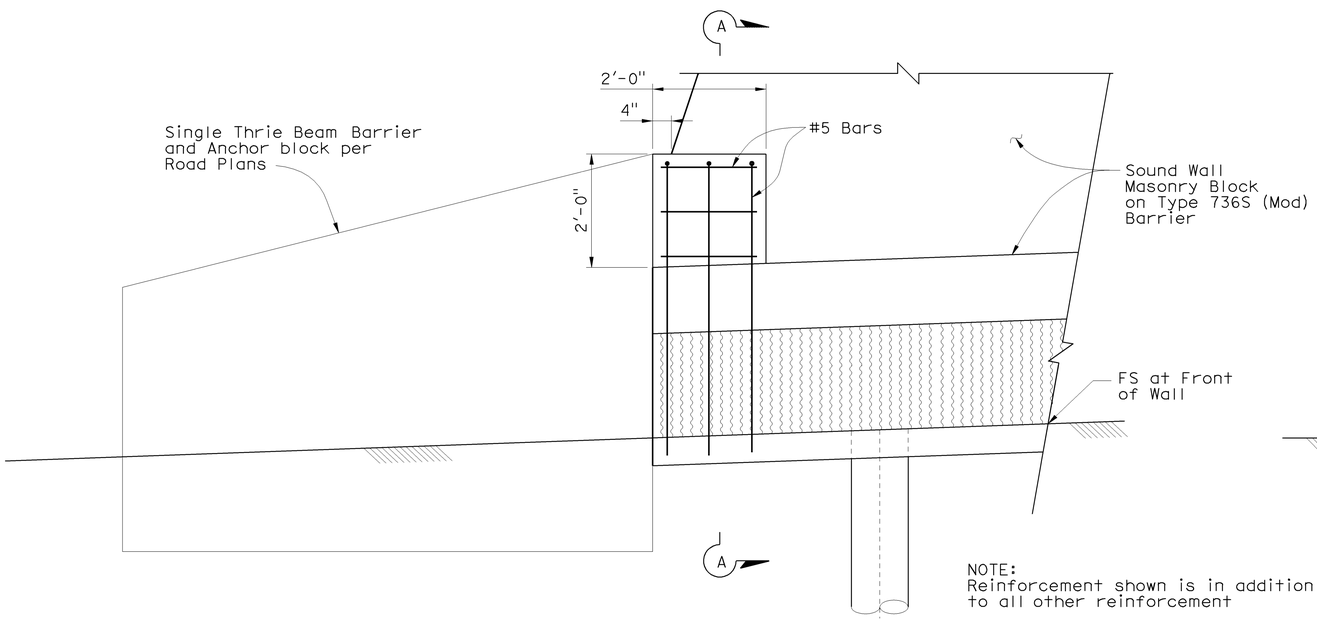

NOTE:
Reinforcement shown is in addition to all other reinforcement

ELEVATION

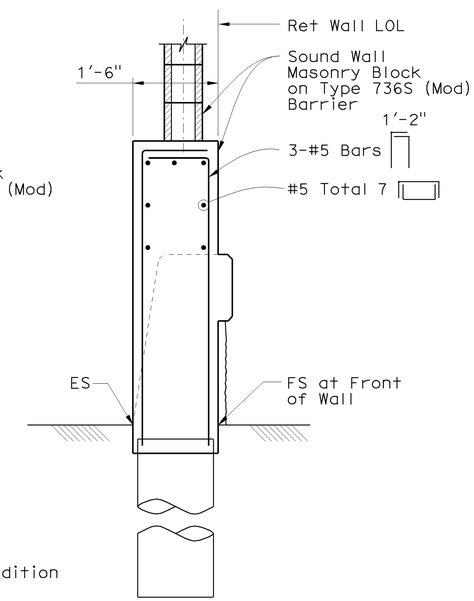

SECTION A-A

THRIE BEAM BARRIER BLOCK DETAIL

SCALE: 3/4"=1'-0"

NOTE:
THE CONTRACTOR SHALL VERIFY ALL CONTROLLING FIELD DIMENSIONS BEFORE ORDERING OR FABRICATING ANY MATERIAL.

DESIGN OVERSIGHT Jon Hamaguchi
6-24-09
SIGN OFF DATE

	BY	CHECKED
DESIGN	Chad Harden	Kevin Burke
DETAILS	Gerald Fetters	Chad Harden
QUANTITIES	Kelly Gillis	Chad Harden

PREPARED FOR THE STATE OF CALIFORNIA DEPARTMENT OF TRANSPORTATION

Chad W. Harden
PROJECT ENGINEER

BRIDGE NO. 55E0078,55E0079, 55E0080,55E0082, 55E0083,55E0085, 55E0086
POST MILE VARIES

SOUND WALL ON RETAINING WALL DETAILS
MISCELLANEOUS DETAILS No. 3

DESIGN DETAIL SHEET (ENGLISH) (REV. 2/25/05)

ORIGINAL SCALE IN INCHES FOR REDUCED PLANS 0 1 2 3

CU 12
EA 0F0311

DISREGARD PRINTS BEARING EARLIER REVISION DATES

REVISION DATES (PRELIMINARY STAGE ONLY) 2/13/09 4/6/09 6/17/09

SHEET 32 OF 83

FILE => 55e-538-u-miscdt11.dgn

USERNAME => trmikesl DATE PLOTTED => 17-DEC-2009 TIME PLOTTED => 07:40

DIST	COUNTY	ROUTE	POST MILES TOTAL PROJECT	SHEET No	TOTAL SHEETS
12	Ora	57	16.2/18.6	495	960

REGISTERED CIVIL ENGINEER — DATE 06/17/09

12-14-09
PLANS APPROVAL DATE

REGISTERED PROFESSIONAL ENGINEER — Chad W Harden, No. 67648, Exp. 06/30/11, CIVIL, STATE OF CALIFORNIA

The State of California or its officers or agents shall not be responsible for the accuracy or completeness of electronic copies of this plan sheet.

OCTA
550 S MAIN STREET
ORANGE, CA 92868

RBF CONSULTING
14725 ALTON PKWY
IRVINE, CA 92618

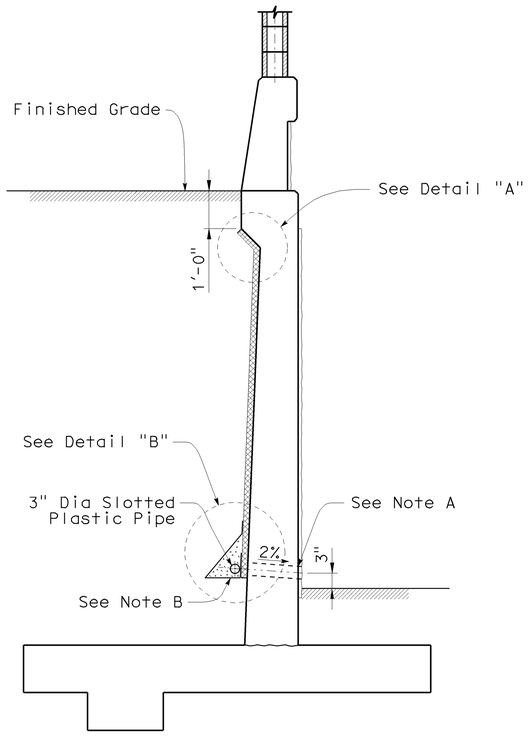

RETAINING WALL
WEEP HOLE AND GEOCOMPOSITE DRAIN

NO SCALE

Alternative to Bridge Detail BO-3

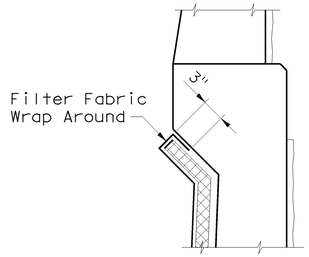

DETAIL "A"

NO SCALE

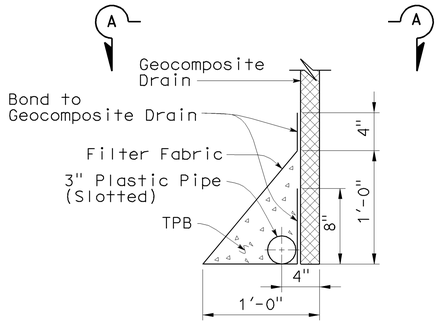

DETAIL "B"

NO SCALE

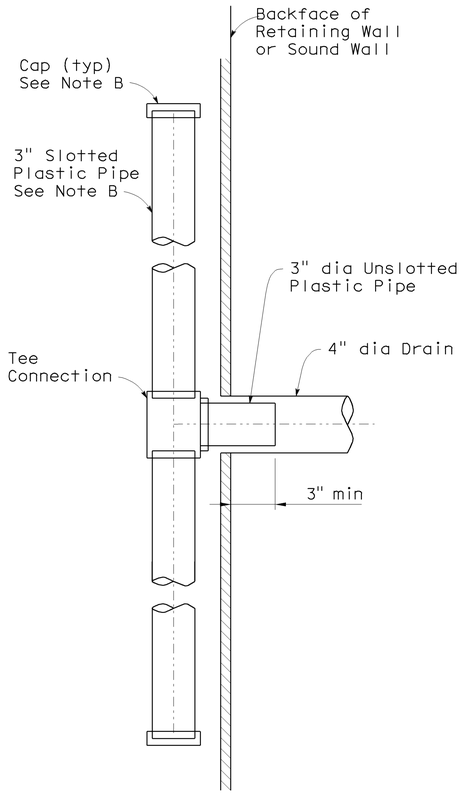

SECTION A-A

NO SCALE

NOTES

A. 4" Dia drains at intermediate sag points and at 25' max center to center (9'-0" c-c for Type 3 and 9'-3" c-c for Type 4 retaining walls). For wall adjacent to sidewalks or curbs, provide 4' cast iron or asbestos cement pipe under the sidewalk to discharge through curb face. Exposed wall drains shall be located 3"± above finished grade.

B. Geocomposite drain, cement treated permeable base, and 3" dia slotted plastic pipe continuous behind retaining wall or abutment. Cap ends of pipe. Provide 'Tee' connection at each 4" dia drain.

C. Connect the low end of plastic pipe to the main outlet pipe as applicable.

NOTE:
THE CONTRACTOR SHALL VERIFY ALL CONTROLLING FIELD DIMENSIONS BEFORE ORDERING OR FABRICATING ANY MATERIAL.

DESIGN OVERSIGHT Jon Hamaguchi
6-24-09
SIGN OFF DATE

	BY	CHECKED
DESIGN	Chad Harden	Kevin Burke
DETAILS	Gerald Fetters	Chad Harden
QUANTITIES	Kelly Gillis	Chad Harden

PREPARED FOR THE STATE OF CALIFORNIA DEPARTMENT OF TRANSPORTATION

Chad W. Harden
PROJECT ENGINEER

BRIDGE NO.
[illegible]
POST MILE
VARIES

SOUND WALL ON RETAINING WALL DETAILS
MISCELLANEOUS DETAILS No. 4

DESIGN DETAIL SHEET (ENGLISH) (REV. 2/25/05)

ORIGINAL SCALE IN INCHES FOR REDUCED PLANS 0 1 2 3

CU 12
EA 0F0311

DISREGARD PRINTS BEARING EARLIER REVISION DATES →

REVISION DATES (PRELIMINARY STAGE ONLY): 2/13/09, 4/8/09, 6/17/09

SHEET 33 OF 83

FILE => 55e-538-u-miscdt12.dgn

USERNAME => tmirkes\ DATE PLOTTED => 17-DEC-2009 TIME PLOTTED => 07:40

DIST	COUNTY	ROUTE	POST MILES TOTAL PROJECT	SHEET No	TOTAL SHEETS
12	Ora	57	16.2/18.6	496	960

REGISTERED CIVIL ENGINEER — 06/17/09 DATE

12-14-09
PLANS APPROVAL DATE

Chad W Harden No. 67648 Exp. 06/30/11 CIVIL — REGISTERED PROFESSIONAL ENGINEER — STATE OF CALIFORNIA

The State of California or its officers or agents shall not be responsible for the accuracy or completeness of electronic copies of this plan sheet.

OCTA
550 S MAIN STREET
ORANGE, CA 92868

RBF CONSULTING
14725 ALTON PKWY
IRVINE, CA 92618

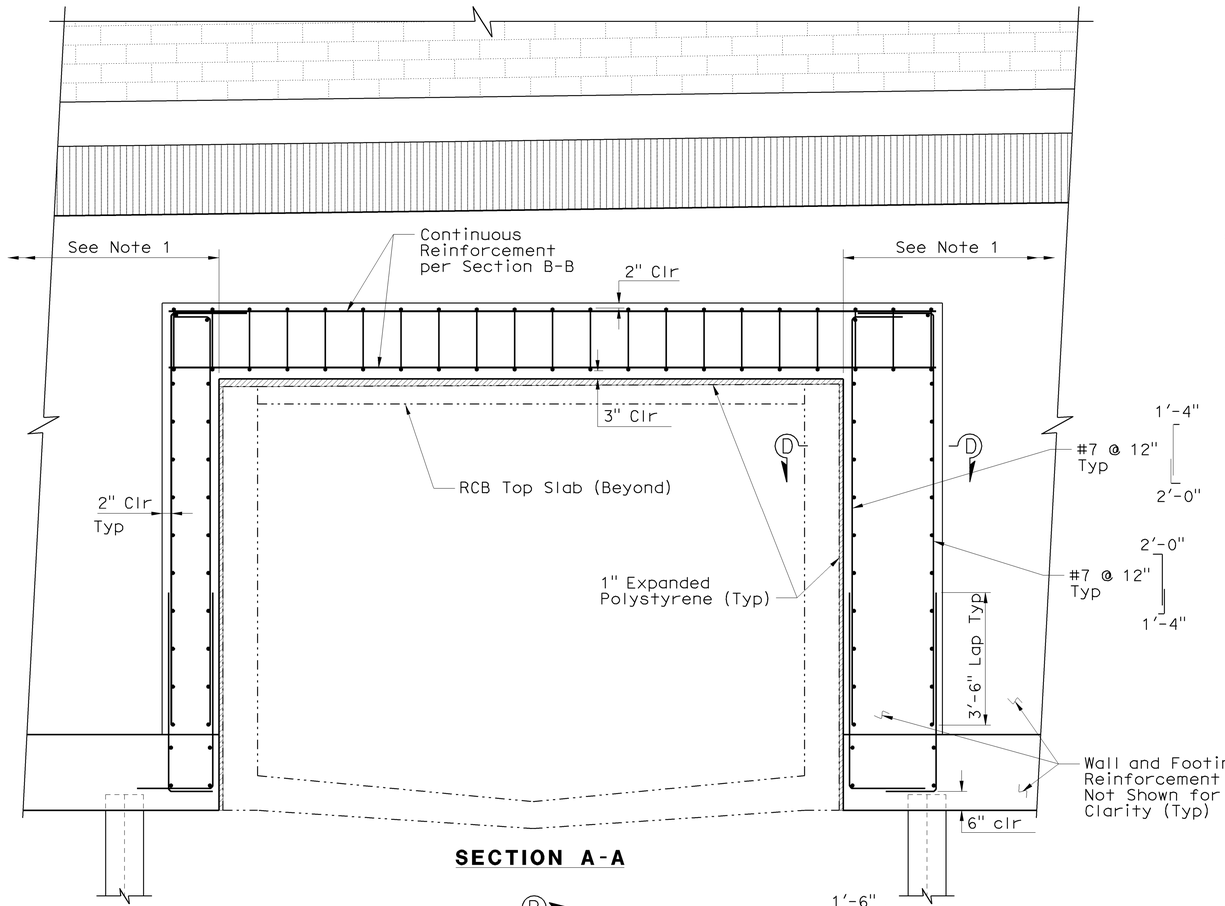

SECTION A-A

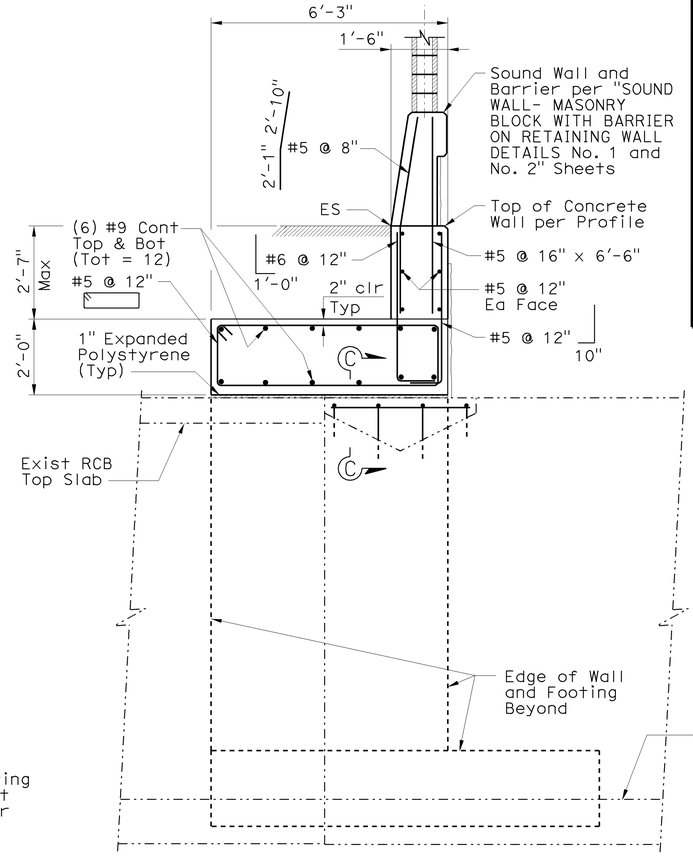

SECTION B-B

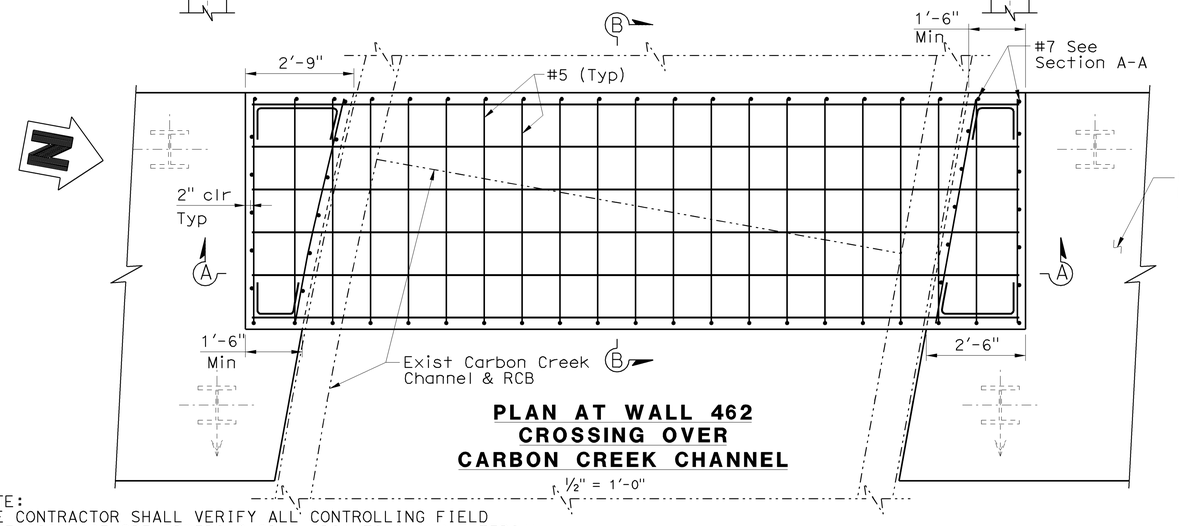

PLAN AT WALL 462 CROSSING OVER CARBON CREEK CHANNEL

½" = 1'-0"

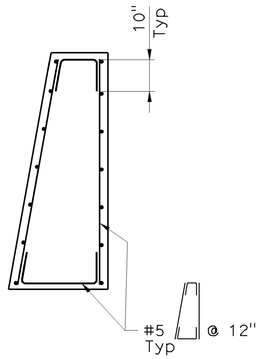

SECTION D-D

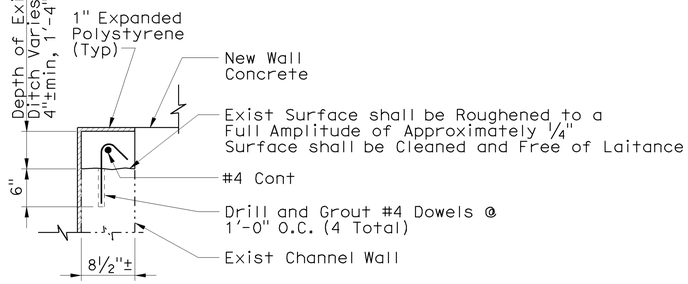

SECTION C-C

NOTE:

For Wall and Footing, See "RETAINING WALL DETAILS - RETAINING WALL TYPE 1SWBP - DETAILS No. 1" and "DETAILS No. 2" Sheets, per H=16' Schedule.

NOTE:
THE CONTRACTOR SHALL VERIFY ALL CONTROLLING FIELD DIMENSIONS BEFORE ORDERING OR FABRICATING ANY MATERIAL.

DESIGN OVERSIGHT — Jon Hamaguchi
6-24-09
SIGN OFF DATE

	BY	CHECKED
DESIGN	Chad Harden	Kevin Burke
DETAILS	Gerald Fetters	Chad Harden
QUANTITIES	Kelly Gillis	Chad Harden

PREPARED FOR THE STATE OF CALIFORNIA DEPARTMENT OF TRANSPORTATION

Chad W. Harden
PROJECT ENGINEER

BRIDGE NO.	SOUND WALL ON RETAINING WALL DETAILS
55E0078	WALL 462 CHANNEL BRIDGE DETAILS
POST MILE 16.0	

DESIGN DETAIL SHEET (ENGLISH) (REV. 2/25/05)

ORIGINAL SCALE IN INCHES FOR REDUCED PLANS 0 1 2 3

CU 12
EA 0F0311

DISREGARD PRINTS BEARING EARLIER REVISION DATES →

REVISION DATES (PRELIMINARY STAGE ONLY): 2/13/09 | 5/8/09 | 6/17/09

SHEET 34 OF 83

FILE => 55e-538-u-miscdt13.dgn

USERNAME => trmikesl DATE PLOTTED => 17-DEC-2009 TIME PLOTTED => 07:40

DIST	COUNTY	ROUTE	POST MILES TOTAL PROJECT	SHEET No	TOTAL SHEETS
12	Ora	57	16.2/18.6	497	960

REGISTERED CIVIL ENGINEER 06/17/09 DATE

12-14-09
PLANS APPROVAL DATE

REGISTERED PROFESSIONAL ENGINEER Chad W Harden No. 67648 Exp. 06/30/11 CIVIL STATE OF CALIFORNIA

The State of California or its officers or agents shall not be responsible for the accuracy or completeness of electronic copies of this plan sheet.

OCTA
550 S MAIN STREET
ORANGE, CA 92868

RBF CONSULTING
14725 ALTON PKWY
IRVINE, CA 92618

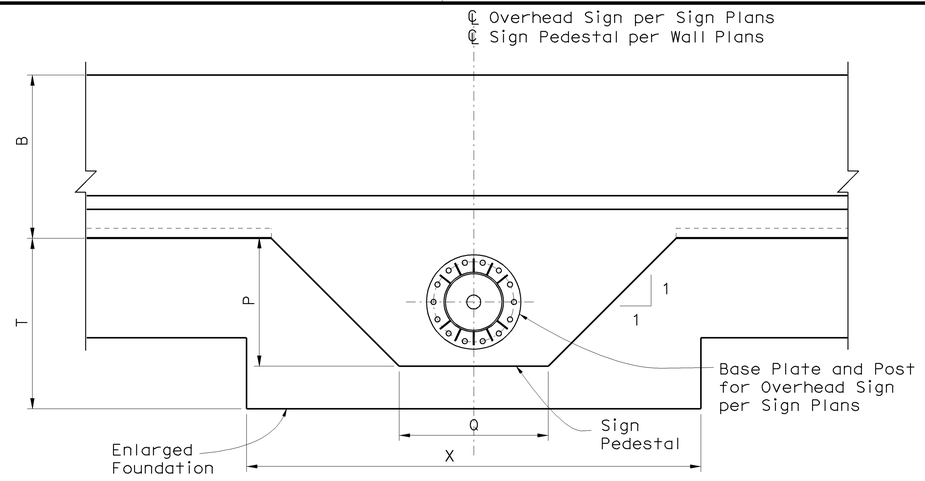

PLAN
3/8" = 1'-0"

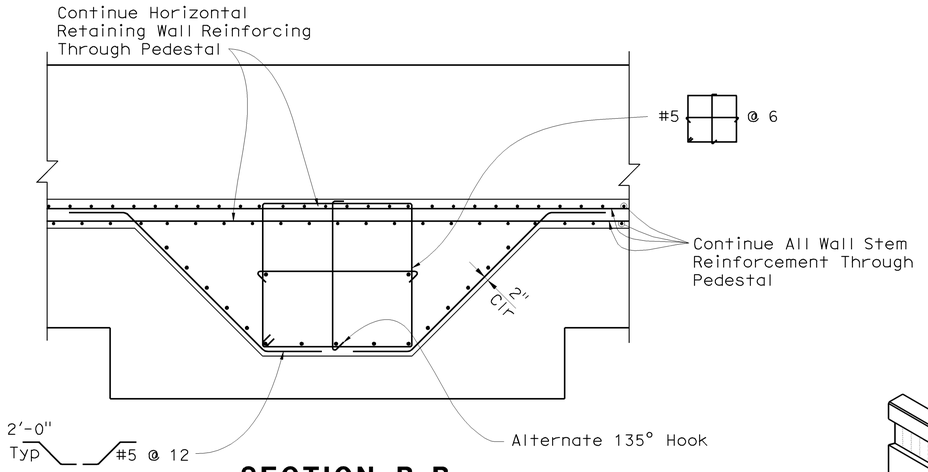

SECTION B-B
3/8" = 1'-0"

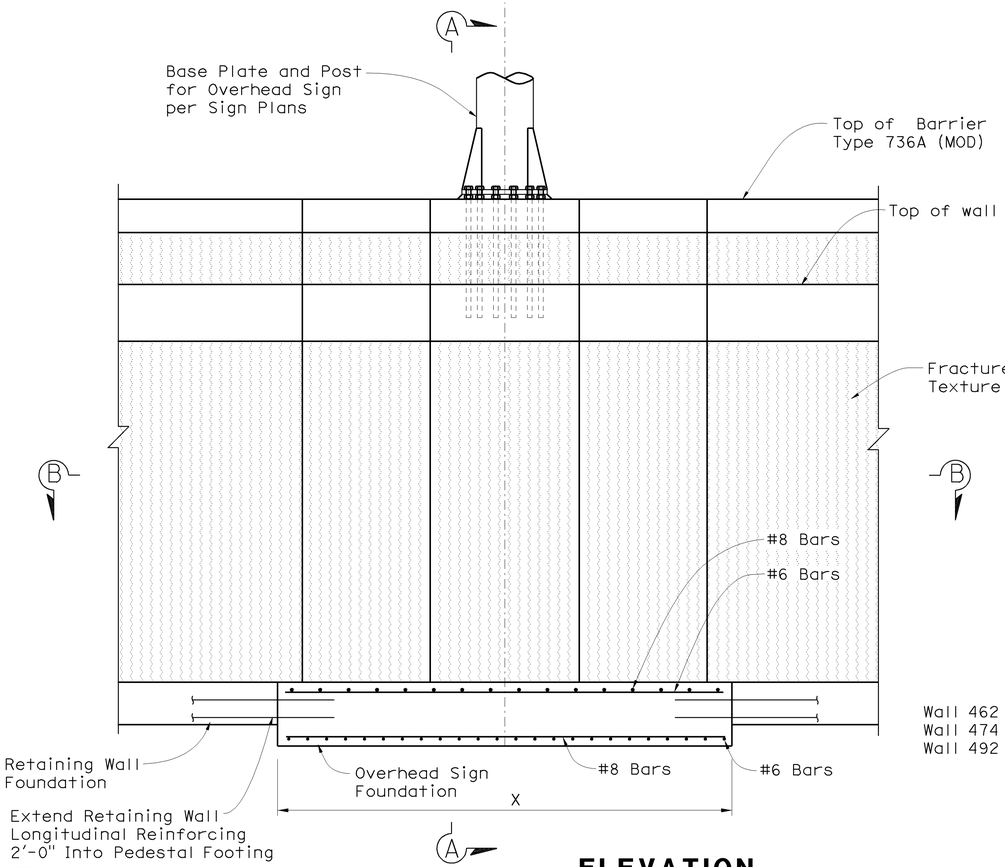

ELEVATION
3/8" = 1'-0"

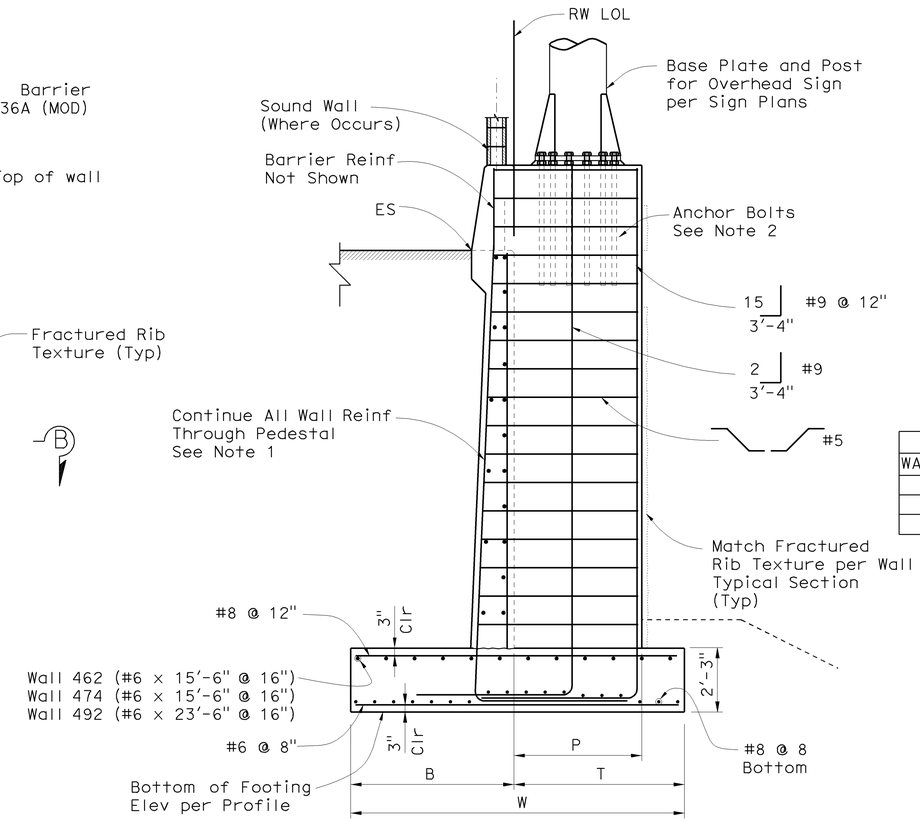

SECTION A-A
3/8" = 1'-0"

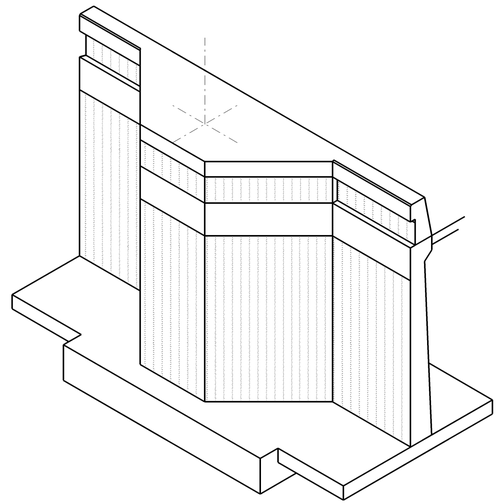

NOTE: Sound Wall not Shown for Clarity

ISOMETRIC VIEW
No Scale

SIGN PEDESTAL SCHEDULE

WALL No.	STATION	P	Q	T	B	W	X
462	461+51.56	4'-6"	5'-3"	5'-6"	5'-0"	10'-6"	16'-0"
474	473+60.00	4'-6"	5'-3"	5'-0"	5'-3"	10'-3"	16'-0"
492	492+00.00	4'-6"	5'-3"	5'-0"	5'-5"	10'-5"	24'-0"

NOTES

1. Reinforcement shown on Elevation and Sections is in Addition to all other Reinforcement. See "Retaining Wall Details" Sheets.
2. For Anchor Bolt size, Bolt Circle and Bolt Embedment, See Sign Plans.

NOTE:
THE CONTRACTOR SHALL VERIFY ALL CONTROLLING FIELD DIMENSIONS BEFORE ORDERING OR FABRICATING ANY MATERIAL.

DESIGN OVERSIGHT Jon Hamaguchi
6-24-09
SIGN OFF DATE

	BY	CHECKED
DESIGN	Chad Harden	Kevin Burke
DETAILS	Gerald Fetters	Chad Harden
QUANTITIES	Kelly Gillis	Chad Harden

PREPARED FOR THE STATE OF CALIFORNIA DEPARTMENT OF TRANSPORTATION

Chad W. Harden
PROJECT ENGINEER

BRIDGE NO. 55E0078 55E0080 55E0082
POST MILE 16.0,16.2,16.6

SOUND WALL ON RETAINING WALL DETAILS
OVERHEAD SIGN PEDESTAL DETAILS

DESIGN DETAIL SHEET (ENGLISH) (REV. 2/25/05)

ORIGINAL SCALE IN INCHES FOR REDUCED PLANS 0 1 2 3

CU 12
EA 0F0311

DISREGARD PRINTS BEARING EARLIER REVISION DATES

REVISION DATES (PRELIMINARY STAGE ONLY) 2/13/09 4/6/09 6/17/09

SHEET 35 OF 83

FILE => 55e-538-u-miscdt14.dgn

USERNAME => trmikesl DATE PLOTTED => 17-DEC-2009 TIME PLOTTED => 07:41

Dist	COUNTY	ROUTE	POST MILES TOTAL PROJECT	SHEET No.	TOTAL SHEETS
12	Ora	57	16.2/18.6	498	960

Chien-Tai Yang 06/17/09
REGISTERED CIVIL ENGINEER DATE

12-14-09
PLANS APPROVAL DATE

REGISTERED PROFESSIONAL ENGINEER
Chien-Tai Yang
No. C 66394
Exp. 6-30-10
CIVIL
STATE OF CALIFORNIA

THE STATE OF CALIFORNIA OR ITS OFFICERS OR AGENTS SHALL NOT BE RESPONSIBLE FOR THE ACCURACY OR COMPLETENESS OF SCANNED COPIES OF THIS PLAN SHEET.

ORANGE COUNTY TRANSPORTATION AUTHORITY
550 S. MAIN STREET
ORANGE, CA 92863-1584

EARTH MECHANICS, INC.
17660 NEWHOPE STREET, SUITE E
FOUNTAIN VALLEY, CA 92708

BENCHMARKS:

Vertical Datum NAVD 88

Designation: 1L-54-82 Elev = 153.171
Described by OCS 2002 - Found 3¾" OCS Aluminum Benchmark Disk Stamped "1L-54-82", set in the Top of a 6 in. by 6 in. Concrete Post. Monument is located along the Westerly Levee of the Santa Ana River, 0.25 Miles Northerly along Levee from the Centerline of Orangewood Avenue, 200 ft. Northeasterly of the Easterly Leg of the Anaheim Angels 200 ft. tall sign, 69 ft. Westerly of the Centerline of the Bike Trail and 1.5 ft. Westerly of a Steel OCS Witness Post. Monument is set 0.3 below the Ground.

Designation: 2G-25-70 Elev = 275.872
Described by OCS 2003 - Found 3¾" OCS Aluminum Benchmark Disk Stamped "2G-25-70", set in the Southeasterly Corner of a 4 ft by 6 ft Concrete Catch Basin. Monument is Located in the Northwesterly Corner of the Intersection of Yorba Linda Boulevard and Deerpark Drive, 75 ft Westerly of the Centerline of Deerpark and 46 ft Northerly of the Centerline of Yorba Linda. Monument is set Level with the Sidewalk.

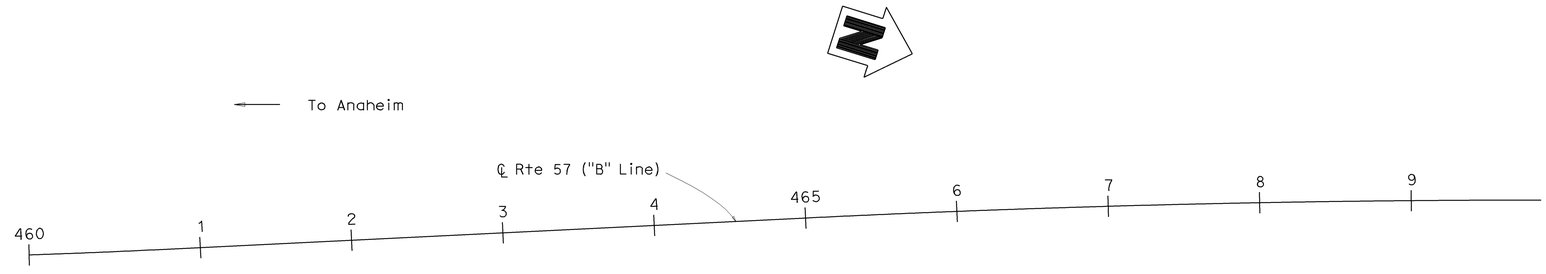

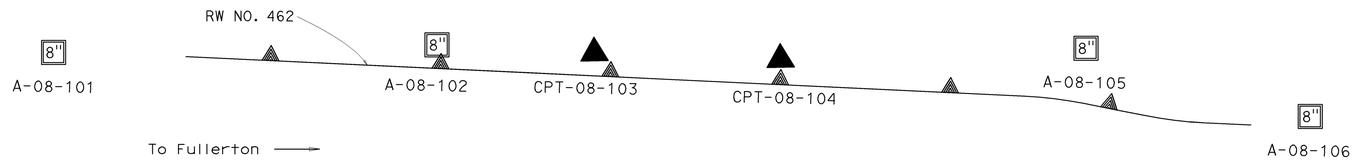

PLAN
1" = 50'

DESIGN OVERSIGHT Jon Hamaguchi 6-24-09 SIGN OFF DATE	DRAWN BY: J.Fang CHECKED BY: L.Cheang	FIELD INVESTIGATION BY: R.Jie	PREPARED FOR THE STATE OF CALIFORNIA DEPARTMENT OF TRANSPORTATION	C. Yang PROJECT ENGINEER	BRIDGE NO. 55E0078 POST MILES 16.2/18.6	RETAINING WALL NO. 462 LOG OF TEST BORINGS NO. 1

DESIGN GENERAL PLAN SHEET (ENGLISH) (REV. 2/25/05)

ORIGINAL SCALE IN INCHES FOR REDUCED PLANS 0 1 2 3

CU 12
EA 0F0311

DISREGARD PRINTS BEARING EARLIER REVISION DATES →

REVISION DATES (PRELIMINARY STAGE ONLY)										SHEET	OF
4/30/09										36	83

FILE => 55e-538-z-462-1tb01.dgn

USERNAME => trmikesl DATE PLOTTED => 17-DEC-2009 TIME PLOTTED => 07:41

DIST	COUNTY	ROUTE	POST MILES TOTAL PROJECT	SHEET No	TOTAL SHEETS
12	Ora	57	16.2/18.6	499	960

REGISTERED CIVIL ENGINEER — 06/17/09 DATE

12-14-09
PLANS APPROVAL DATE

REGISTERED PROFESSIONAL ENGINEER — Chien-Tai Yang — NO. C 66394 — EXP. 6-30-10 — GEOTECHNICAL — STATE OF CALIFORNIA

The State of California or its officers or agents shall not be responsible for the accuracy or completeness of electronic copies of this plan sheet.

ORANGE COUNTY TRANSPORTATION AUTHORITY
550 S. MAIN STREET
ORANGE, CA 92863-1584

EARTH MECHANICS, INC.
17660 NEWHOPE STREET, SUITE E
FOUNTAIN VALLEY, CA 92708

FOR PLAN VIEW SEE "RETAINING WALL NO. 462, LOG OF TEST BORINGS NO. 1"

NOTES:

(1) This LOTB sheet was prepared in accordance with the Caltrans Soil and Rock Logging, Classification and Presentation Manual (June 2007)
(2) 2.4" samples were taken using a California Modified Sampler.
(3) An automatic trip hammer system consisting of a hammer weight of 140 lbs falling a distance of 30" was used to advance the drive sampler.
(4) Conversion factor from 2.4" Modified California Ring Sampler blowcounts to Standard Penetration Test (SPT) blowcounts is 0.5.

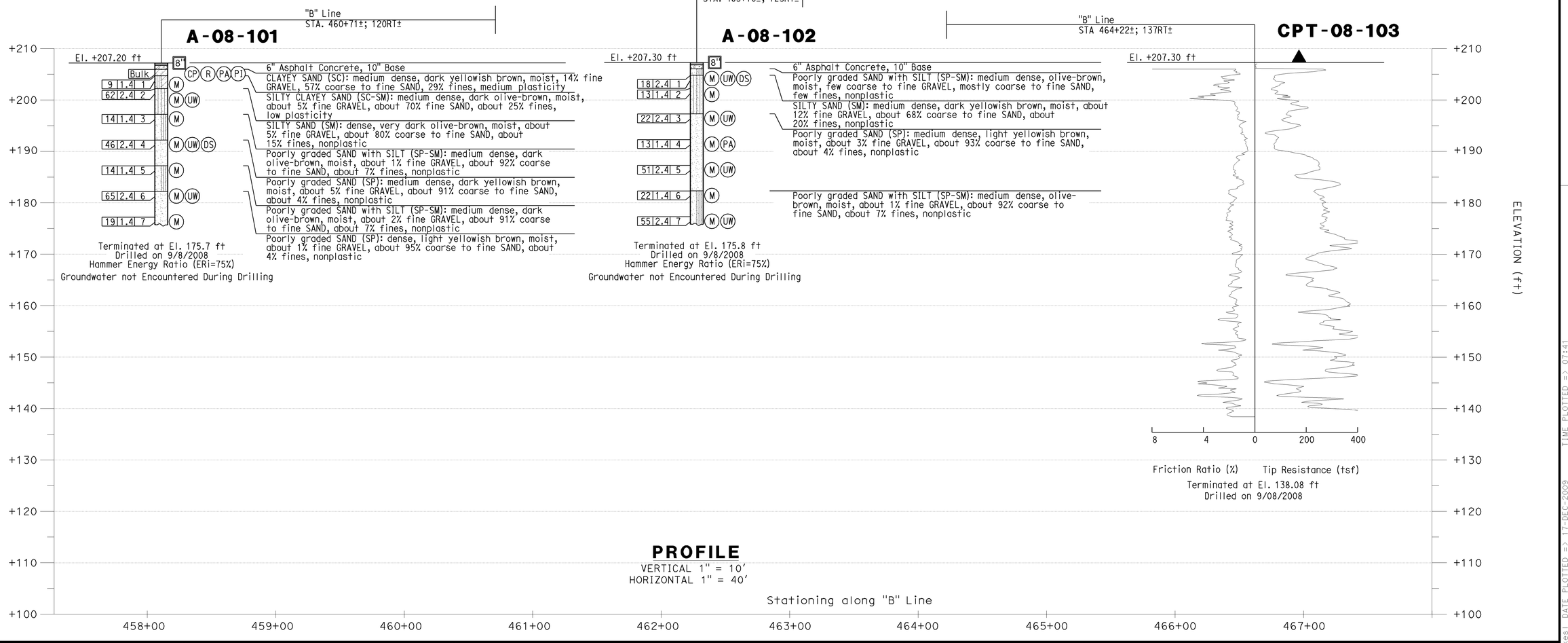

PROFILE
VERTICAL 1" = 10'
HORIZONTAL 1" = 40'

DESIGN OVERSIGHT — Jon Hamaguchi
6-24-09
SIGN OFF DATE

DRAWN BY: J.Fang
CHECKED BY: L.Cheang

FIELD INVESTIGATION BY:
R.Jie

PREPARED FOR THE STATE OF CALIFORNIA DEPARTMENT OF TRANSPORTATION

C.Yang
PROJECT ENGINEER

BRIDGE NO. 55E0078
POST MILES 16.2/18.6

RETAINING WALL NO. 462
LOG OF TEST BORINGS NO. 2

DESIGN GENERAL PLAN SHEET (ENGLISH) (REV. 2/25/05)

ORIGINAL SCALE IN INCHES FOR REDUCED PLANS 0 1 2 3

CU 12
EA 0F0311

DISREGARD PRINTS BEARING EARLIER REVISION DATES →

REVISION DATES (PRELIMINARY STAGE ONLY): 4/30/09

SHEET 37 OF 83

FILE => 55e-538-z-462-1tb02.dgn

USERNAME => trmikesl DATE PLOTTED => 17-DEC-2009 TIME PLOTTED => 07:41

Dist	COUNTY	ROUTE	POST MILES TOTAL PROJECT	SHEET No.	TOTAL SHEETS
12	Ora	57	16.2/18.6	500	960

REGISTERED CIVIL ENGINEER — DATE 06/17/09

12-14-09
PLANS APPROVAL DATE

REGISTERED PROFESSIONAL ENGINEER — Chien-Tai Yang — No. C 66394 — Exp. 6-30-10 — CIVIL — STATE OF CALIFORNIA

THE STATE OF CALIFORNIA OR ITS OFFICERS OR AGENTS SHALL NOT BE RESPONSIBLE FOR THE ACCURACY OR COMPLETENESS OF SCANNED COPIES OF THIS PLAN SHEET.

ORANGE COUNTY TRANSPORTATION AUTHORITY
550 S. MAIN STREET
ORANGE, CA 92863-1584

EARTH MECHANICS, INC.
17660 NEWHOPE STREET, SUITE E
FOUNTAIN VALLEY, CA 92708

FOR PLAN VIEW SEE "RETAINING WALL NO. 462, LOG OF TEST BORINGS NO. 1"

(1) This LOTB sheet was prepared in accordance with the Caltrans Soil and Rock Logging, Classification and Presentation Manual (June 2007)
(2) 2.4" samples were taken using a California Modified Sampler.
(3) An automatic trip hammer system consisting of a hammer weight of 140 lbs falling a distance of 30" was used to advance the drive sampler.
(4) Conversion factor from 2.4" Modified California Ring Sampler blowcounts to Standard Penetration Test (SPT) blowcounts is 0.5.

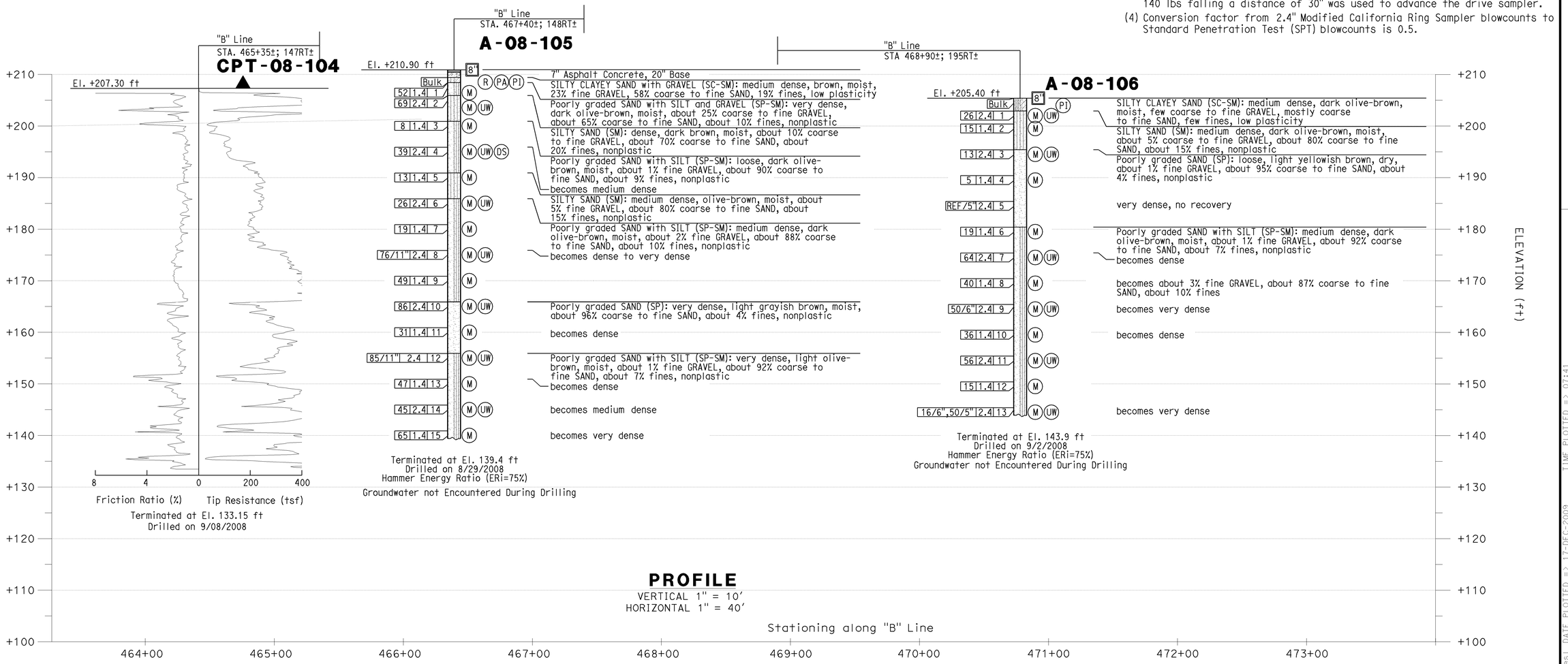

PROFILE

VERTICAL 1" = 10'
HORIZONTAL 1" = 40'

DESIGN OVERSIGHT Jon Hanaguchi 6-24-09 SIGN OFF DATE	DRAWN BY: J.Fang CHECKED BY: L.Cheang	FIELD INVESTIGATION BY: R.Jie	PREPARED FOR THE STATE OF CALIFORNIA DEPARTMENT OF TRANSPORTATION	C.Yang PROJECT ENGINEER	BRIDGE NO. 55E0078 POST MILES 16.2/18.6	RETAINING WALL NO. 462 LOG OF TEST BORINGS NO. 3

DESIGN GENERAL PLAN SHEET (ENGLISH) (REV. 2/25/05)

ORIGINAL SCALE IN INCHES FOR REDUCED PLANS 0 1 2 3

CU 12
EA 0F0311

DISREGARD PRINTS BEARING EARLIER REVISION DATES →

REVISION DATES (PRELIMINARY STAGE ONLY): 4/30/09

SHEET 38 OF 83

FILE => 55e-538-z-462-ltb03.dgn

USERNAME => tmikesl DATE PLOTTED => 17-DEC-2009 TIME PLOTTED => 07:41