DIST	COUNTY	ROUTE	POST MILES TOTAL PROJECT	SHEET No	TOTAL SHEETS
12	Ora	57	16.2/18.6	801	960

REGISTERED CIVIL ENGINEER — DATE 6-17-09

12-14-09
PLANS APPROVAL DATE

REGISTERED PROFESSIONAL ENGINEER — Romeo Firme — No. C43929 — Exp. 06/30/09 — CIVIL — STATE OF CALIFORNIA

The State of California or its officers or agents shall not be responsible for the accuracy or completeness of electronic copies of this plan sheet.

OCTA
550 S MAIN STREET
ORANGE, CA 92868

RBF CONSULTING
14725 ALTON PKWY
IRVINE, CA 92618

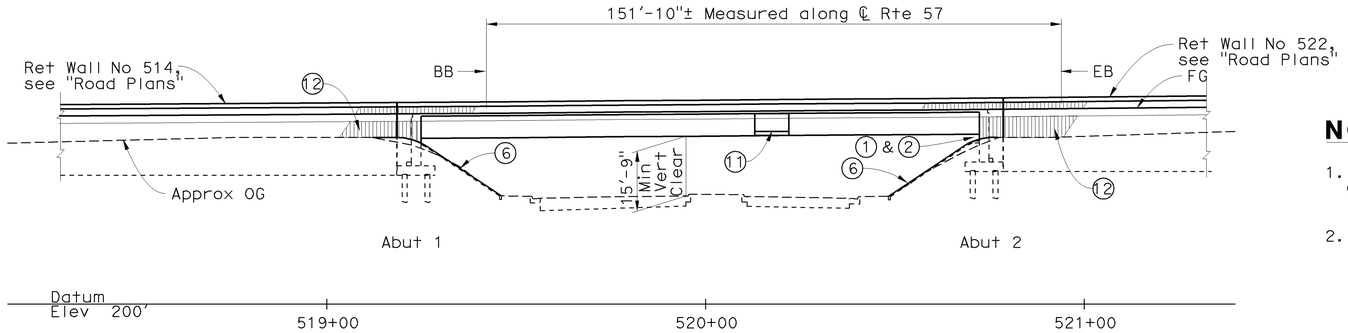

ELEVATION

1" = 20'

CURVE DATA				
NO.	R	Δ	T	L
1	1000'	14°07'17"	246.47'	123.86'

NOTES:

1. For General Notes and Index to Plans, see "Index to Plans & General Notes" sheet.
2. For Pile Data Table, see "Foundation Plan" sheet.

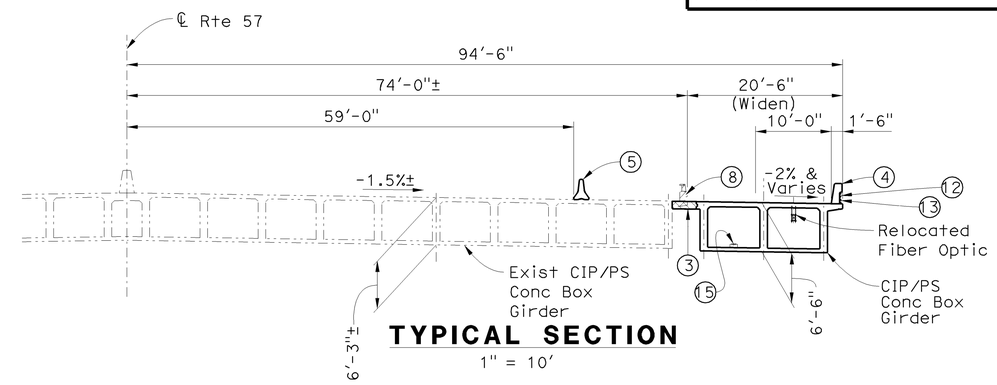

TYPICAL SECTION

1" = 10'

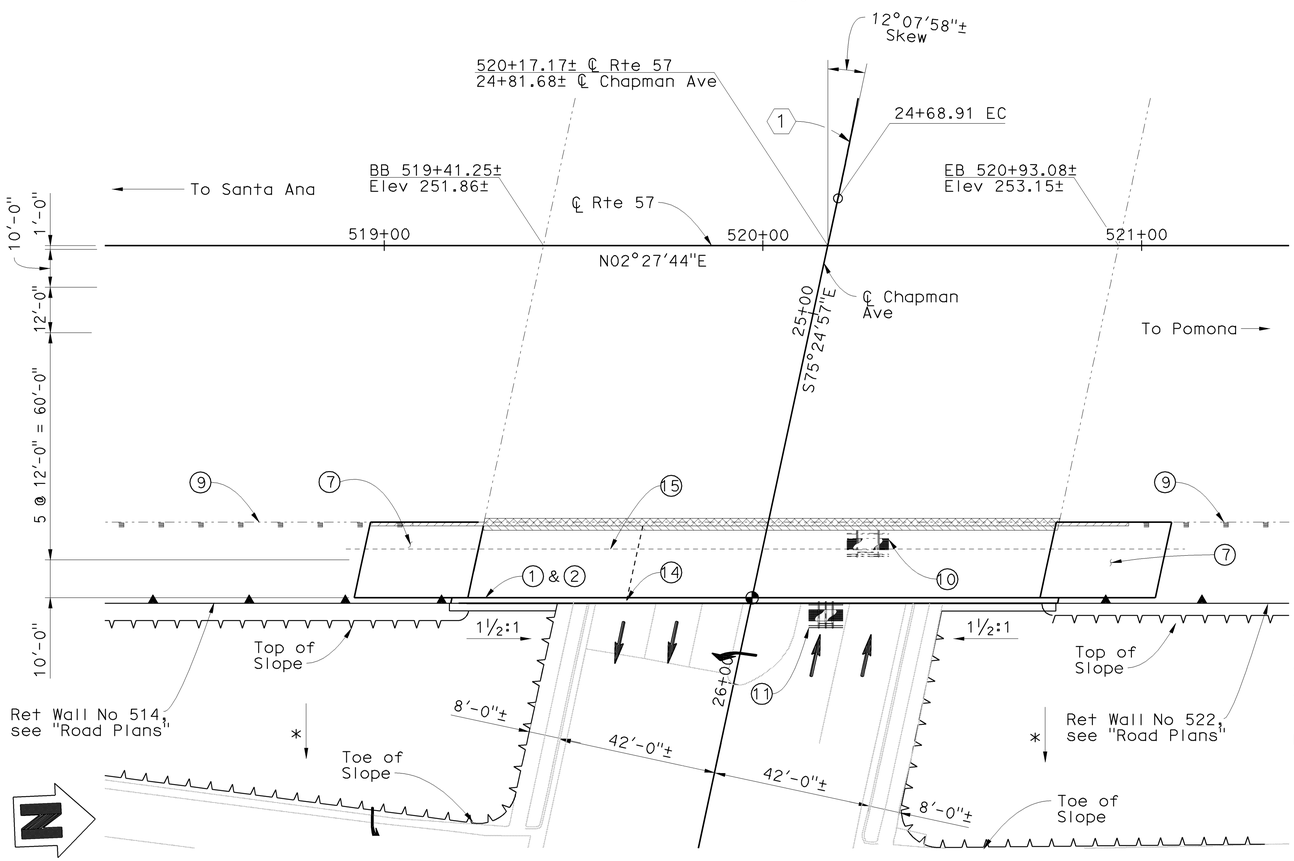

PLAN

1" = 20'

CHAPMAN AVENUE UC — BRIDGE NO 55-0456

QUANTITIES

BRIDGE REMOVAL (PORTION), LOCATION F	LUMP	SUM
JACKING SUPERSTRUCTURE	LUMP	SUM
STRUCTURE EXCAVATION (BRIDGE)	179	CY
STRUCTURE EXCAVATION (TYPE Y-1) (AERIALLY DEPOSITED LEAD)	11	CY
STRUCTURE BACKFILL (BRIDGE)	160	CY
WATER SUPPLY LINE (BRIDGE)	222	LF
24" CAST-IN-DRILLED-HOLE CONCRETE PILING	900	LF
PRESTRESSING CAST-IN-PLACE CONCRETE	LUMP	SUM
STRUCTURAL CONCRETE, BRIDGE FOOTING	46	CY
STRUCTURAL CONCRETE, BRIDGE	295	CY
STRUCTURAL CONCRETE, APPROACH SLAB (TYPE N)	43	CY
FRACTURED RIB TEXTURE	87	SQFT
DRILL AND BOND DOWEL	111	LF
JOINT SEAL (MR 1")	42	LF
BAR REINFORCING STEEL (BRIDGE)	100,876	LB
FURNISH SIGN STRUCTURE (BRIDGE MOUNTED WITH WALKWAY)	1,095	LB
INSTALL SIGN STRUCTURE (BRIDGE MOUNTED WITH WALKWAY)	1,095	LB
SLOPE PAVING (CONCRETE)	17	CY
SLOPE PAVING (AESTHETIC TREATMENT)	800	SQFT
MISCELLANEOUS METAL (BRIDGE)	204	LB
CONCRETE BARRIER (TYPE 736 MODIFIED)	163	LF

LEGEND:

1. Paint "Bridge No 55-0456" and year constructed
2. Paint "Chapman Ave UC"
3. Closure Pour
4. Concrete Barrier Type 736 (Mod)
5. Temporary Railing, Type K, see "Road Plans"
6. Slope Paving
7. Structure Approach Type N(30D)
8. Exist Fiber Optic to be relocated
9. Metal Beam Guard Rail, to be removed, see "Road Plans"
10. Remove Bridge Mounted Sign
11. Bridge Mounted Sign
12. Architectural Treatment
13. Communication and Sprinkler Control
14. Pull box at barrier, for location and conduit, see "Lighting Plans"
15. Water Supply Line

Indicates Existing Structure
Bridge Removal (Portion)
Closure Pour
Point of Min Vert Clearance
* Match Exist Slope

NOTE:
THE CONTRACTOR SHALL VERIFY ALL CONTROLLING FIELD DIMENSIONS BEFORE ORDERING OR FABRICATING ANY MATERIAL.

DESIGN OVERSIGHT — Jon Hamaguchi — 6-24-09 SIGN OFF DATE

	BY	CHECKED				
DESIGN	Chris Cho	T. A. Kirilov	LRFD DESIGN	LIVE LOADING: HL93 AND PERMIT DESIGN LOAD		
DETAILS	J. Saldana	T. A. Kirilov	LAYOUT	M. Strahota	Romeo M. Firme	
QUANTITIES	Chris Cho	H. Montoya	SPECIFICATIONS	S. Sheikh	PLANS AND SPECS COMPARED: S. Sheikh	

PREPARED FOR THE STATE OF CALIFORNIA DEPARTMENT OF TRANSPORTATION

Romeo M. Firme — PROJECT ENGINEER

BRIDGE NO. 55-0456
POST MILE 17.3

CHAPMAN AVENUE UC (WIDEN)
GENERAL PLAN

DESIGN GENERAL PLAN SHEET (ENGLISH) (REV. 2/25/05)

ORIGINAL SCALE IN INCHES FOR REDUCED PLANS 0 1 2 3

CU 12
EA 0F0311

DISREGARD PRINTS BEARING EARLIER REVISION DATES

REVISION DATES (PRELIMINARY STAGE ONLY): 7/24/08 10/24/08 2/13/09 4/6/09 6/17/09

SHEET 1 OF 23

FILE => 55-0456-a-gp01.dgn

USERNAME => trlenard DATE PLOTTED => 16-DEC-2009 TIME PLOTTED => 09:57

DIST	COUNTY	ROUTE	POST MILES TOTAL PROJECT	SHEET No	TOTAL SHEETS
12	Ora	57	16.2/18.6	802	960

REGISTERED CIVIL ENGINEER 6-17-09 DATE

12-14-09
PLANS APPROVAL DATE

REGISTERED PROFESSIONAL ENGINEER Romeo Firme No. C43929 Exp. 06/30/09 CIVIL STATE OF CALIFORNIA

The State of California or its officers or agents shall not be responsible for the accuracy or completeness of electronic copies of this plan sheet.

OCTA
550 S MAIN STREET
ORANGE, CA 92868

RBF CONSULTING
14725 ALTON PKWY
IRVINE, CA 92618

GENERAL NOTES
LOAD AND RESISTANCE FACTOR DESIGN

DESIGN:
AASHTO LRFD Bridge Design Specifications, 3rd edition with interims through 2006 and the Caltrans Amendments 3.06.01; except that abutments, earth retaining systems, bridge (including barrier and railing) details taken from Standard Plans May 2006 and earlier versions, and Standard Bridge Details XS sheets, are designed using Bridge Design Specifications (`96 AASHTO w/Revisions by Caltrans).

SEISMIC DESIGN:
Caltrans Seismic Design Criteria (SDC), Version 1.4 dated June 2006.

DEAD LOAD:
Includes 35 psf for future wearing surface.

LIVE LOADING:
HL93 and permit design load.

SEISMIC LOADING:
Soil profile type D
Magnitude group 6.5 ± 0.25 (PBA = 0.7g) Scaled from 0.6g
Magnitude group 7.5 ± 0.25 (PBA = 0.6g)
Enveloped & Modified for near fault effects
as per SDC Section 6.1.2.1

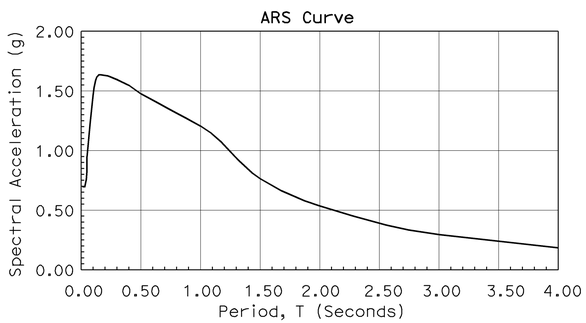

REINFORCED CONCRETE:
f_y = 60,000 psi
f'_c = 3,600 psi
n = 8
Transverse Deck Slabs (Working Stress Design)
f_s = 20,000 psi
f_c = 1,200 psi
n = 10

PRESTRESSED CONCRETE: See "Prestressing Notes"

NOTE:
THE CONTRACTOR SHALL VERIFY ALL CONTROLLING FIELD DIMENSIONS BEFORE ORDERING OR FABRICATING ANY MATERIAL.

INDEX TO PLANS

SHEET NO.	TITLE
1.	General Plan
2.	Index to Plans & General Notes
3.	Construction Sequence
4.	Bridge Removal Details
5.	Deck Elevations
6.	Foundation Plan
7.	Abutment 1 Layout
8.	Abutment 2 Layout
9.	Abutment Pile Layout
10.	Abutment Details
11.	Typical Section
12.	Girder Layout
13.	Additional Girder Reinforcement
14.	Bridge Mounted Sign Detail No. 1
15.	Bridge Mounted Sign Detail No. 2
16.	Structure Approach Type N (30D)
17.	Structure Approach Drainage Details
18.	Slope Paving - Full Slope
19.	Slope Paving Aesthetic Treatment
20.	Log of Test Borings No. 1
21.	Log of Test Borings No. 2
22.	Log of Test Borings No. 3
23.	As-Built Log of Test Borings

STANDARD PLANS DATED MAY 2006

	A10A	Acronyms and Abbreviations (Sheet 1 of 2)
	A10B	Acronyms and Abbreviations (Sheet 2 of 2)
	A10C	Symbols (Sheet 1 of 2)
	A10D	Symbols (Sheet 2 of 2)
	A62C	Limits of Payment for Excavation and Backfill (Bridge)
	B0-1	Bridge Details
	B0-3	Bridge Details
	B0-5	Bridge Details
	B0-13	Bridge Details
	B2-3	16" and 24" Cast-in-Drilled-Hole Concrete Pile
RSP	B6-21	Joint Seal (Maximum Movement Rating = 2")
	B7-1	Box Girder Details
	B7-10	Utility Opening Box Girder
	B8-5	Cast-in-Place Prestressed Girder Details
	B11-56	Concrete Barrier Type 736
	B14-3	Communication and Sprinkler Control Conduits (Conduits less Than Size 4")
	B14-4	Water Supply Line (Bridge) (Pipe Sizes less than 4")
	B14-5	Water Supply Line (Details) (Pipe Sizes less than 4")

PLAN SYMBOLS

Standard Plan Sheet No.
Detail No.
Section Identification

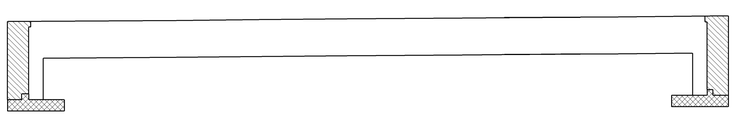

LEGEND FOR CONCRETE STRENGTH & TYPE LIMITS

Structural Concrete, Bridge (f'c = 5.5 ksi @ 28 days)

Structural Concrete, Bridge Footing (f'c = 3.6 ksi @ 28 days)

Structural Concrete, Bridge (f'c = 3.6 ksi @ 28 days)

CONCRETE STRENGTH AND TYPE LIMITS
No Scale

LEGEND FOR LIMITS OF EXPANSIVE SOIL

Low Expansion Material EI < 50 and SE>20

Structure Excavation (Bridge)

Structure Backfill (Bridge)

Roadway Excavation, See "Road Plans"

Roadway Embankment, see "Road Plans"

Structure Excavation (Type Y-1) (Aerially Deposited Lead)
Abut 1, C=0.5'
Abut 2, C=0.5'

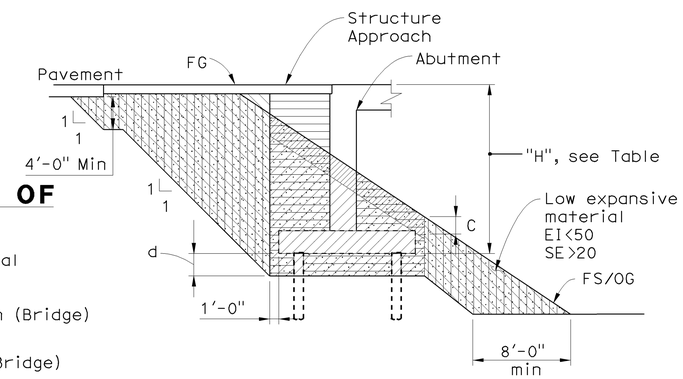

H	d
< 16'-0"	4'-0"
> 16'-0"	0

Note:
1. Transverse limit of Low Expansive Material shall be 12" from edges of abutment footing to end of existing abutment stem.
2. This special detail supercedes "Section A-A" on Sheet No. A62C, page 18 of the Standard Plans dated May 2006.

LIMITS OF EXPANSIVE SOIL EXCLUSION ZONE IN BRIDGE EMBANKMENT
No Scale

DESIGN OVERSIGHT Jon Hamaguchi
6-24-09
SIGN OFF DATE

	BY	CHECKED
DESIGN	Chris Cho	T. A. Kirilov
DETAILS	J. Saldana	T. A. Kirilov
QUANTITIES	Chris Cho	H. Montoya

PREPARED FOR THE STATE OF CALIFORNIA DEPARTMENT OF TRANSPORTATION

Romeo M. Firme
PROJECT ENGINEER

BRIDGE NO. 55-0456
POST MILE 17.3

CHAPMAN AVENUE UC (WIDEN)
INDEX TO PLANS & GENERAL NOTES

DESIGN DETAIL SHEET (ENGLISH) (REV. 2/25/05)

ORIGINAL SCALE IN INCHES FOR REDUCED PLANS 0 1 2 3

CU 12
EA 0F0311

DISREGARD PRINTS BEARING EARLIER REVISION DATES
REVISION DATES (PRELIMINARY STAGE ONLY) 2/13/09 4/06/09 6/17/09

SHEET 2 OF 23

FILE => 55-0456-a-itp01.dgn

USERNAME => rfriehord DATE PLOTTED => 16-DEC-2009 TIME PLOTTED => 09:57

DIST	COUNTY	ROUTE	POST MILES TOTAL PROJECT	SHEET No	TOTAL SHEETS
12	Ora	57	16.2/18.6	803	960

REGISTERED CIVIL ENGINEER 6-17-09 DATE

12-14-09
PLANS APPROVAL DATE

REGISTERED PROFESSIONAL ENGINEER
Romeo Firme
No. C43929
Exp. 06/30/09
CIVIL
STATE OF CALIFORNIA

The State of California or its officers or agents shall not be responsible for the accuracy or completeness of electronic copies of this plan sheet.

OCTA
550 S MAIN STREET
ORANGE, CA 92868

RBF CONSULTING
14725 ALTON PKWY
IRVINE, CA 92618

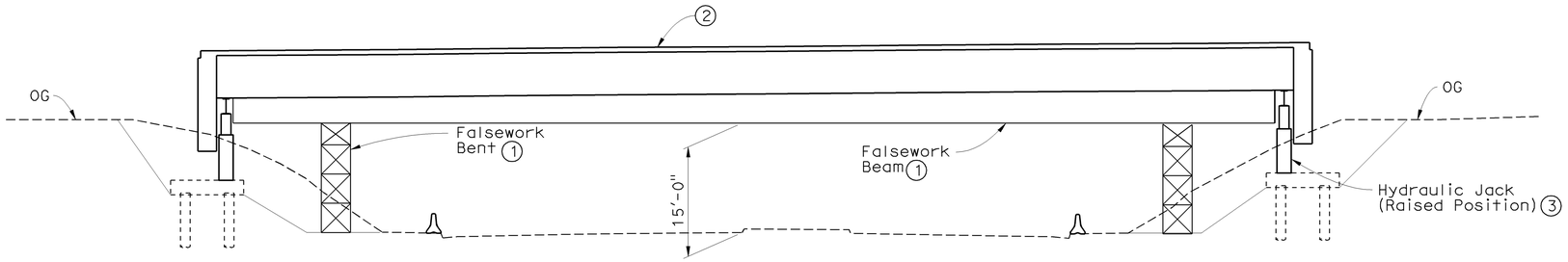

CAST HIGH ELEVATION

1" = 10'

CONSTRUCTION SEQUENCE:

1. Erect falsework bents and beam. Provide minimum vertical clearance of 15' over roadway.
2. Build superstructure and diaphragm abutment and stress superstructure.
3. Engage hydraulic jack. Remove falsework beam and bents.
4. Lower bridge into final position.
5. Cast internal shear key and return wall.
6. Cast deck and abutment closure pour.

Jacking Loads	Abut 1	Abut 2
Vertical*	600k	600k
Horizontal	60k	60k

* Approximate Unfactored Dead Load without Barrier and Wingwall.

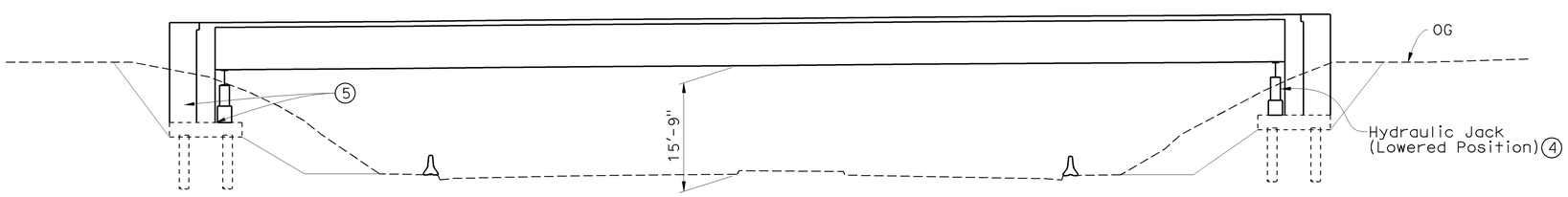

LOWERED INTO FINAL POSITION ELEVATION

1" = 10'

NOTE:
THE CONTRACTOR SHALL VERIFY ALL CONTROLLING FIELD DIMENSIONS BEFORE ORDERING OR FABRICATING ANY MATERIAL.

DESIGN OVERSIGHT Jon Hamaguchi
6-24-09
SIGN OFF DATE

	BY	CHECKED
DESIGN	Chris Cho	T. A. Kirilov
DETAILS	J. Saldana	T. A. Kirilov
QUANTITIES	Chris Cho	H. Montoya

PREPARED FOR THE STATE OF CALIFORNIA DEPARTMENT OF TRANSPORTATION

Romeo M. Firme
PROJECT ENGINEER

BRIDGE NO. 55-0456
POST MILE 17.3

CHAPMAN AVENUE UC (WIDEN)
CONSTRUCTION SEQUENCE

DESIGN DETAIL SHEET (ENGLISH) (REV. 2/25/05)

ORIGINAL SCALE IN INCHES FOR REDUCED PLANS 0 1 2 3

CU 12
EA 0F0311

DISREGARD PRINTS BEARING EARLIER REVISION DATES

REVISION DATES (PRELIMINARY STAGE ONLY) 2/13/09 4/6/09 6/17/09

SHEET 3 OF 23

FILE => 55-0456-b-br-conseq.dgn

USERNAME => trlenard DATE PLOTTED => 16-DEC-2009 TIME PLOTTED => 09:57

DIST	COUNTY	ROUTE	POST MILES TOTAL PROJECT	SHEET No	TOTAL SHEETS
12	Ora	57	16.2/18.6	804	960

REGISTERED CIVIL ENGINEER 6-17-09 DATE

12-14-09
PLANS APPROVAL DATE

REGISTERED PROFESSIONAL ENGINEER Romeo Firme No. C43929 Exp. 06/30/09 CIVIL STATE OF CALIFORNIA

The State of California or its officers or agents shall not be responsible for the accuracy or completeness of electronic copies of this plan sheet.

OCTA
550 S MAIN STREET
ORANGE, CA 92868

RBF CONSULTING
14725 ALTON PKWY
IRVINE, CA 92618

NOTES:

1. The limit of overhang removal is from BB to EB
2. The limit of barrier removal is between ends of WW

LEGEND:

Limits of Bridge Removal (portion)

Existing Structure

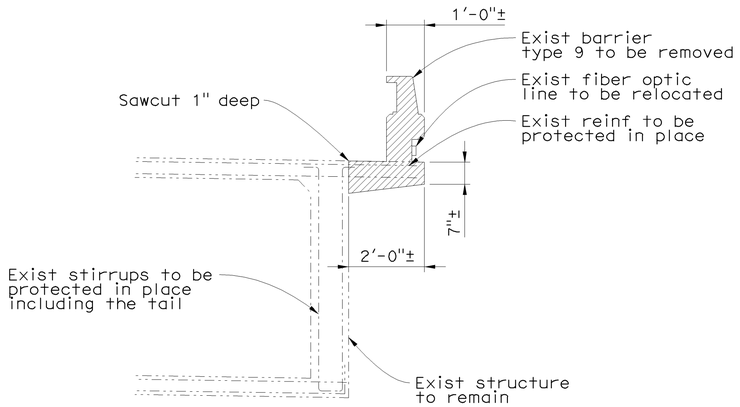

OVERHANG REMOVAL DETAILS

No Scale

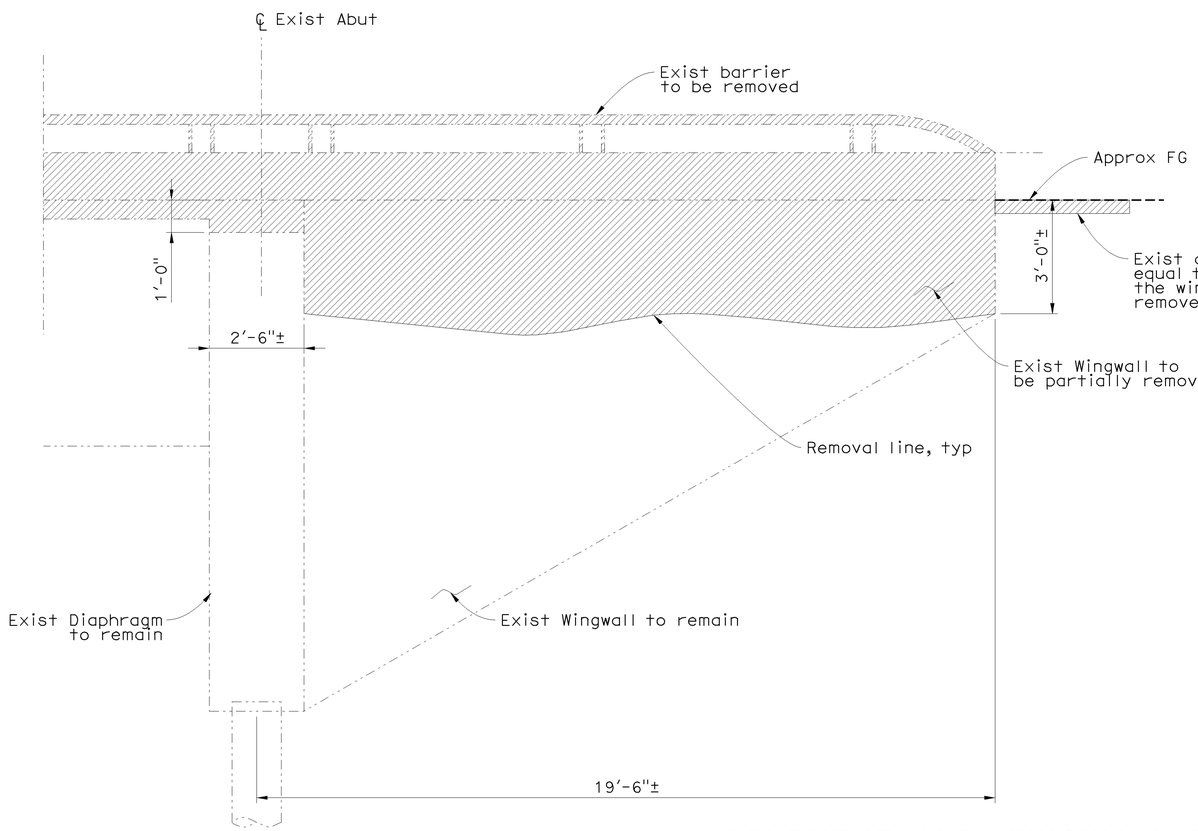

ABUTMENT AND WINGWALL REMOVAL DETAILS

No Scale

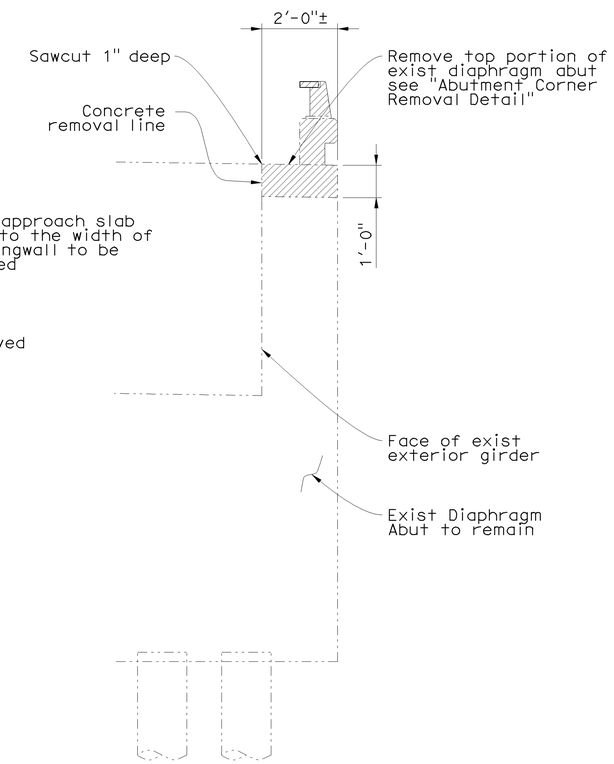

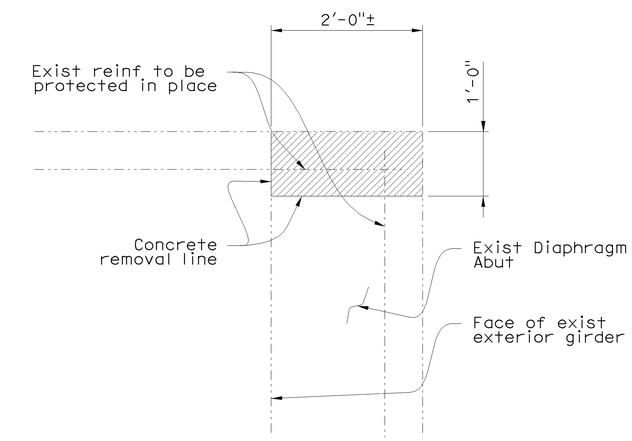

ABUTMENT CORNER REMOVAL DETAIL

No Scale

NOTE:
THE CONTRACTOR SHALL VERIFY ALL CONTROLLING FIELD DIMENSIONS BEFORE ORDERING OR FABRICATING ANY MATERIAL.

DESIGN OVERSIGHT Jon Hamaguchi
6-24-09
SIGN OFF DATE

	BY	CHECKED
DESIGN	Chris Cho	T. A. Kirilov
DETAILS	Chris Cho	T. A. Kirilov
QUANTITIES	Chris Cho	H. Montoya

PREPARED FOR THE STATE OF CALIFORNIA DEPARTMENT OF TRANSPORTATION

Romeo M. Firme
PROJECT ENGINEER

BRIDGE NO. 55-0456
POST MILE 17.3

CHAPMAN AVENUE UC (WIDEN)
BRIDGE REMOVAL DETAILS

DESIGN DETAIL SHEET (ENGLISH) (REV. 2/25/05)

ORIGINAL SCALE IN INCHES FOR REDUCED PLANS 0 1 2 3

CU 12
EA 0F0311

DISREGARD PRINTS BEARING EARLIER REVISION DATES → 2/13/09 5/18/09 6/17/09

REVISION DATES (PRELIMINARY STAGE ONLY)

SHEET 4 OF 23

FILE => 55-0456-b-br-rmv.dgn

USERNAME => trlenard DATE PLOTTED => 16-DEC-2009 TIME PLOTTED => 09:57

DIST	COUNTY	ROUTE	POST MILES TOTAL PROJECT	SHEET No	TOTAL SHEETS
12	Ora	57	16.2/18.6	805	960

REGISTERED CIVIL ENGINEER — DATE 6-17-09

12-14-09
PLANS APPROVAL DATE

REGISTERED PROFESSIONAL ENGINEER — Romeo Firme — No. C43929 — Exp. 06/30/09 — CIVIL — STATE OF CALIFORNIA

The State of California or its officers or agents shall not be responsible for the accuracy or completeness of electronic copies of this plan sheet.

OCTA
550 S MAIN STREET
ORANGE, CA 92868

RBF CONSULTING
14725 ALTON PKWY
IRVINE, CA 92618

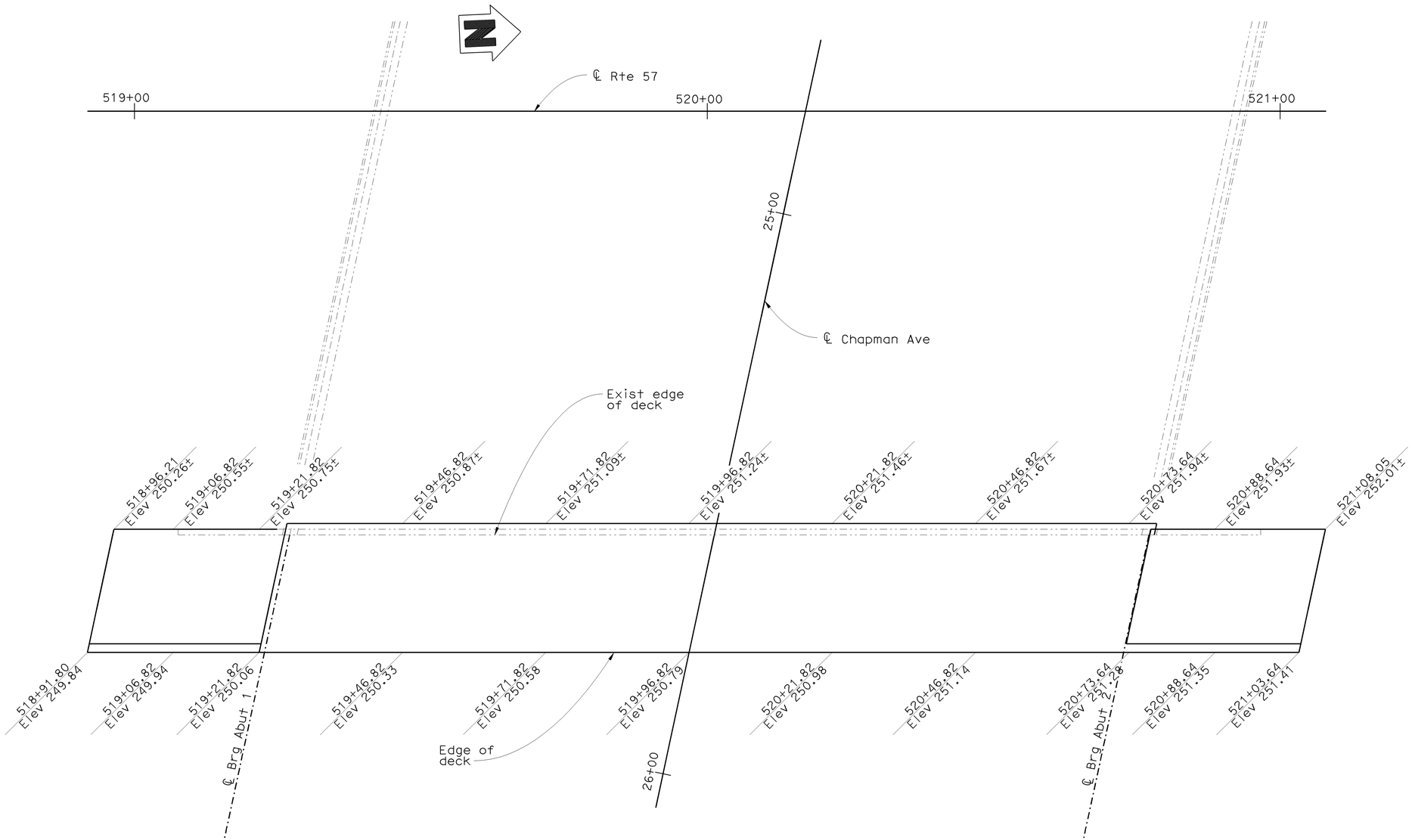

PLAN
1" = 10'

NOTE:

1. Elevations do not include camber

NOTE:
THE CONTRACTOR SHALL VERIFY ALL CONTROLLING FIELD DIMENSIONS BEFORE ORDERING OR FABRICATING ANY MATERIAL.

DESIGN OVERSIGHT — Jon Hamaguchi
6-24-09
SIGN OFF DATE

	BY	CHECKED
DESIGN	Chris Cho	T. A. Kirilov
DETAILS	J. Saldana	T. A. Kirilov
QUANTITIES	Chris Cho	H. Montoya

PREPARED FOR THE STATE OF CALIFORNIA DEPARTMENT OF TRANSPORTATION

Romeo Firme
PROJECT ENGINEER

BRIDGE NO. 55-0456
POST MILE 17.3

CHAPMAN AVENUE UC (WIDEN)
DECK ELEVATIONS

DESIGN DETAIL SHEET (ENGLISH) (REV. 2/25/05)

ORIGINAL SCALE IN INCHES FOR REDUCED PLANS 0 1 2 3

CU 12
EA 0F0311

DISREGARD PRINTS BEARING EARLIER REVISION DATES

REVISION DATES (PRELIMINARY STAGE ONLY): 2/13/09 4/06/09 6/17/09

SHEET 5 OF 23

FILE => 55-0456-d-dc01.dgn

USERNAME => trhenord DATE PLOTTED => 16-DEC-2009 TIME PLOTTED => 09:58

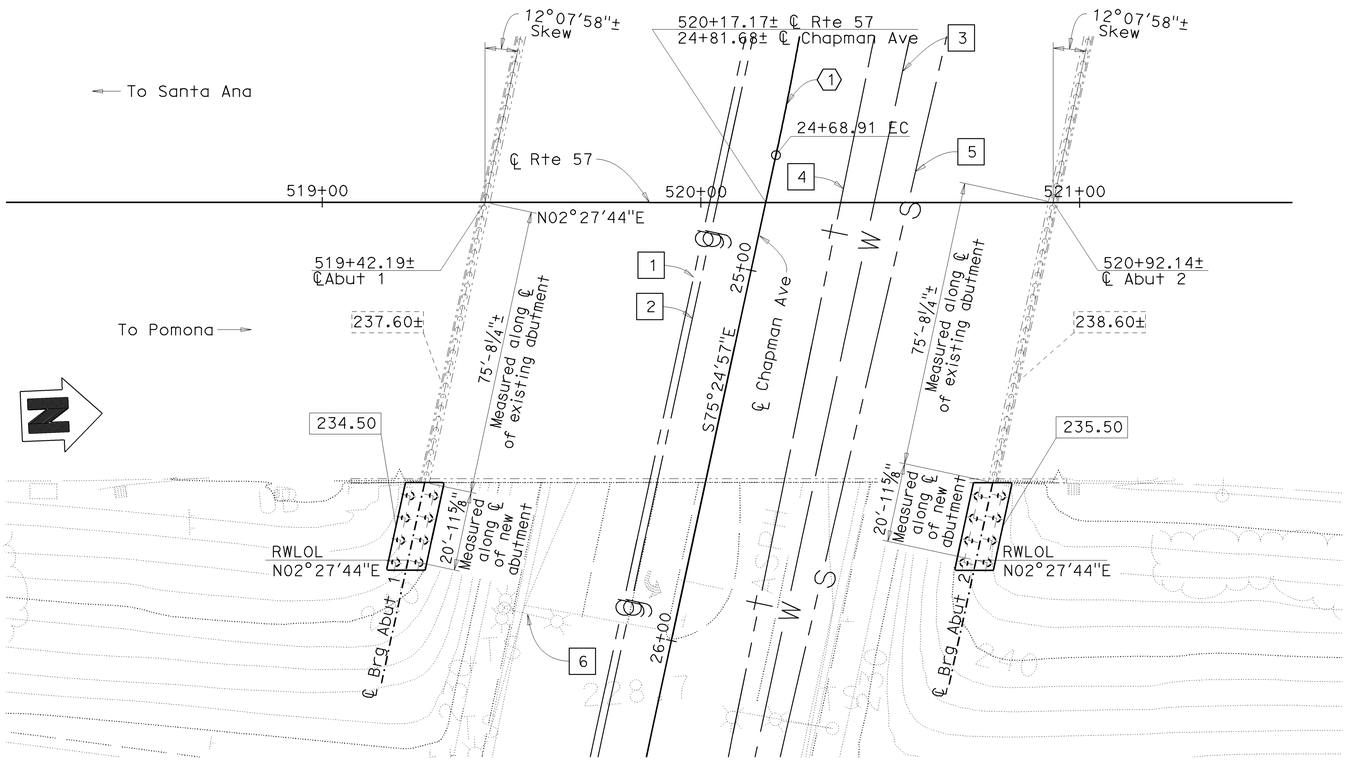

PLAN

1" = 20'

	CURVE DATA			
NO.	R	Δ	T	L
1	1000'	14°07'17"	246.47'	123.86'

DIST	COUNTY	ROUTE	POST MILES TOTAL PROJECT	SHEET No	TOTAL SHEETS
12	Ora	57	16.2/18.6	806	960

REGISTERED CIVIL ENGINEER — DATE 6-17-09

12-14-09
PLANS APPROVAL DATE

REGISTERED PROFESSIONAL ENGINEER — Romeo Firme No. C43929 Exp. 06/30/09 CIVIL — STATE OF CALIFORNIA

The State of California or its officers or agents shall not be responsible for the accuracy or completeness of electronic copies of this plan sheet.

OCTA
550 S MAIN STREET
ORANGE, CA 92868

RBF CONSULTING
14725 ALTON PKWY
IRVINE, CA 92618

NOTES:

1. Location of exist structure foundation is approximate.

LEGEND:

- XXX.XX — Indicates Bottom of Footing Elevation
- XXX.XX± — Indicates Bottom of Existing Footing Elevation
- Indicates Existing Structure
- Indicates New Construction
- Indicates Existing Piling
- Indicates New Piling

UTILITY NOTES:

1. Exist 3" Gas, So Cal
2. Exist 6" Gas, So Cal
3. Exist 8" Water Line, City of Fullerton
4. Exist AT&T Telephone Line
5. Exist 8" Sewer Line, City of Fullerton
6. Temporarily relocate traffic signal, see "Roadway Plans"

BENCHMARKS:

Designation: 1L-54-82 Elev = 153.171
Described by OCS 2002 - Found 3¾" OCS Aluminum Benchmark Disk Stamped "1L-54-82", set in the Top of a 6 in. by 6 in. Concrete Post. Monument is located along the Westerly Levee of the Santa Ana River, 0.25 Miles Northerly along Levee from the Centerline of Orangewood Avenue, 200 ft. Northeasterly of the Easterly Leg of the Anaheim Angels 200 ft. tall sign, 69 ft. Westerly of the Centerline of the Bike Trail and 1.5 ft. Westerly of a Steel OCS Witness Post. Monument is set 0.3 below the Ground.

Designation: 2G-25-70 Elev = 275.872
Described by OCS 2003 - Found 3¾" OCS Aluminum Benchmark Disk Stamped "2G-25-70", set in the Southeasterly Corner of a 4 ft. by 6 ft. Concrete Catch Basin. Monument is Located in the Northwesterly Corner of the Intersection of Yorba Linda Boulevard and Deerpark Drive, 75 ft. Westerly of the Centerline of Deerpark and 46 ft. Northerly of the Centerline of Yorba Linda. Monument is set Level with the Sidewalk.

BASIS OF COORDINATES:

Bearings and Coordinates as shown hereon are in terms of the California Coordinate System of 1983 (CCS83, Epoch 1991.35), Zone 6; based locally upon the following Control Stations as published by the County of Orange:

Name	Northing (ft.)-GRID	Easting (ft.)-GRID
2001 OCS 3282	2247998.84	6069149.29
2017 OCS 0560	2260355.81	6065880.43
2023 OCS 0111	2270990.23	6066809.18

All Coordinates and Distances are in terms of the U.S. Survey Foot, 1 meter = 39.37/12 feet

PILE DATA TABLE

Location	Pile Type	Nominal Resistance (kips)		Design Tip Elevation (ft)	Specified Tip Elevation (ft)	Nominal Driving Reistance (kips)
		Compression	Tension			
Abut 1	24" CIDH	400	0	179(a),187(c),195(d)	179.0	N/A
Abut 2	24" CIDH	400	0	179(a),192(c),196(d)	179.0	N/A

Notes:

1) Design tip elevations for ABUTMENTS are controlled by:
(a) Compression, (c) Settlement, (d) Lateral Load

2) The specified tip elevation shall not be raised above the design tip elevations for tension load, lateral load, and tolerable settlement.

GEOTECHNICAL PROFESSIONAL — APPROVAL DATE 6-17-09

NOTE:
THE CONTRACTOR SHALL VERIFY ALL CONTROLLING FIELD DIMENSIONS BEFORE ORDERING OR FABRICATING ANY MATERIAL.

DESIGN OVERSIGHT — Jon Hamaguchi — 6-24-09 — SIGN OFF DATE

SCALE:	VERT.DATUM NAVD 88	HORZ.DATUM CCS83
PHOTOGRAMMETRY AS OF: 12-02-2007	ALIGNMENT TIES	
SURVEYED BY B. Madigan	DRAFTED BY B. Zeman	
FIELD CHECKED BY B. Cox	CHECKED BY T. Rai	

DESIGN	BY Chris Cho	CHECKED	T. A. Kirilov
DETAILS	BY J. Saldana	CHECKED	T. A. Kirilov
QUANTITIES	BY Chris Cho	CHECKED	H. Montoya

PREPARED FOR THE STATE OF CALIFORNIA DEPARTMENT OF TRANSPORTATION

Romeo M. Firme
PROJECT ENGINEER

BRIDGE NO. 55-0456
POST MILE 17.3

CHAPMAN AVENUE UC (WIDEN)
FOUNDATION PLAN

FOUNDATION PLAN SHEET (ENGLISH) (REV. 2-25-05)

ORIGINAL SCALE IN INCHES FOR REDUCED PLANS 0 1 2 3

CU 12
EA 0F0311

DISREGARD PRINTS BEARING EARLIER REVISION DATES

REVISION DATES (PRELIMINARY STAGE ONLY) 7/10/08 10/24/08 2/13/09 4/16/09 6/17/09

SHEET 6 OF 23

FILE => 55-0456-e-fdn01.dgn

USERNAME => trlenard DATE PLOTTED => 16-DEC-2009 TIME PLOTTED => 09:58

DIST	COUNTY	ROUTE	POST MILES TOTAL PROJECT	SHEET No	TOTAL SHEETS
12	Ora	57	16.2/18.6	807	960

REGISTERED CIVIL ENGINEER — DATE 6-17-09

12-14-09
PLANS APPROVAL DATE

REGISTERED PROFESSIONAL ENGINEER — Romeo Firme No. C43929 Exp. 06/30/09 CIVIL — STATE OF CALIFORNIA

The State of California or its officers or agents shall not be responsible for the accuracy or completeness of electronic copies of this plan sheet.

OCTA
550 S MAIN STREET
ORANGE, CA 92868

RBF CONSULTING
14725 ALTON PKWY
IRVINE, CA 92618

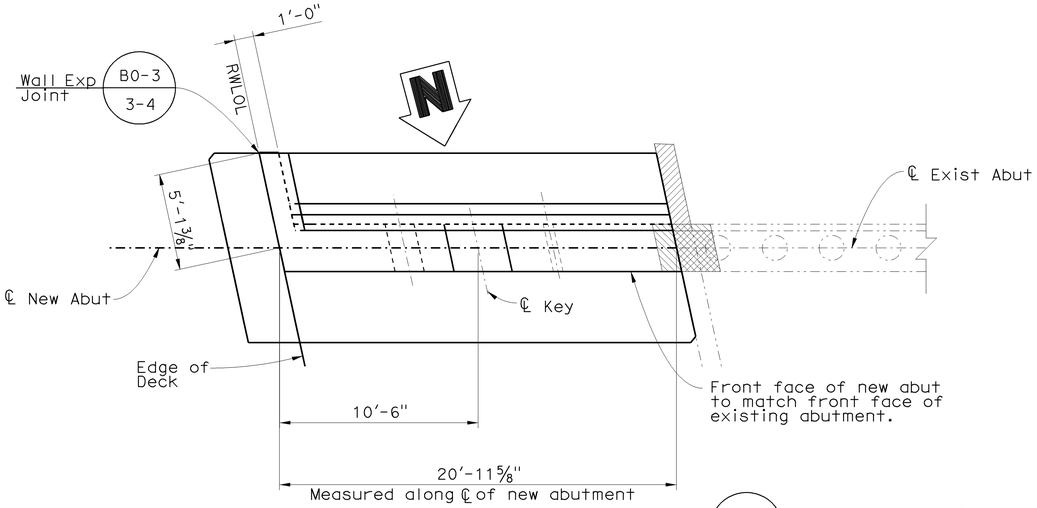

PLAN
1/4" = 1'-0"

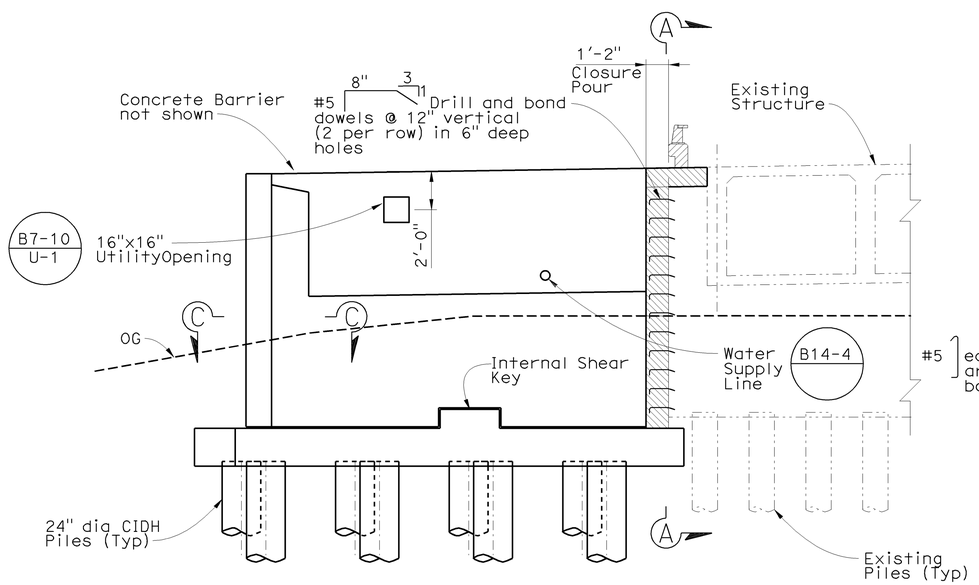

ELEVATION
1/4" = 1'-0"

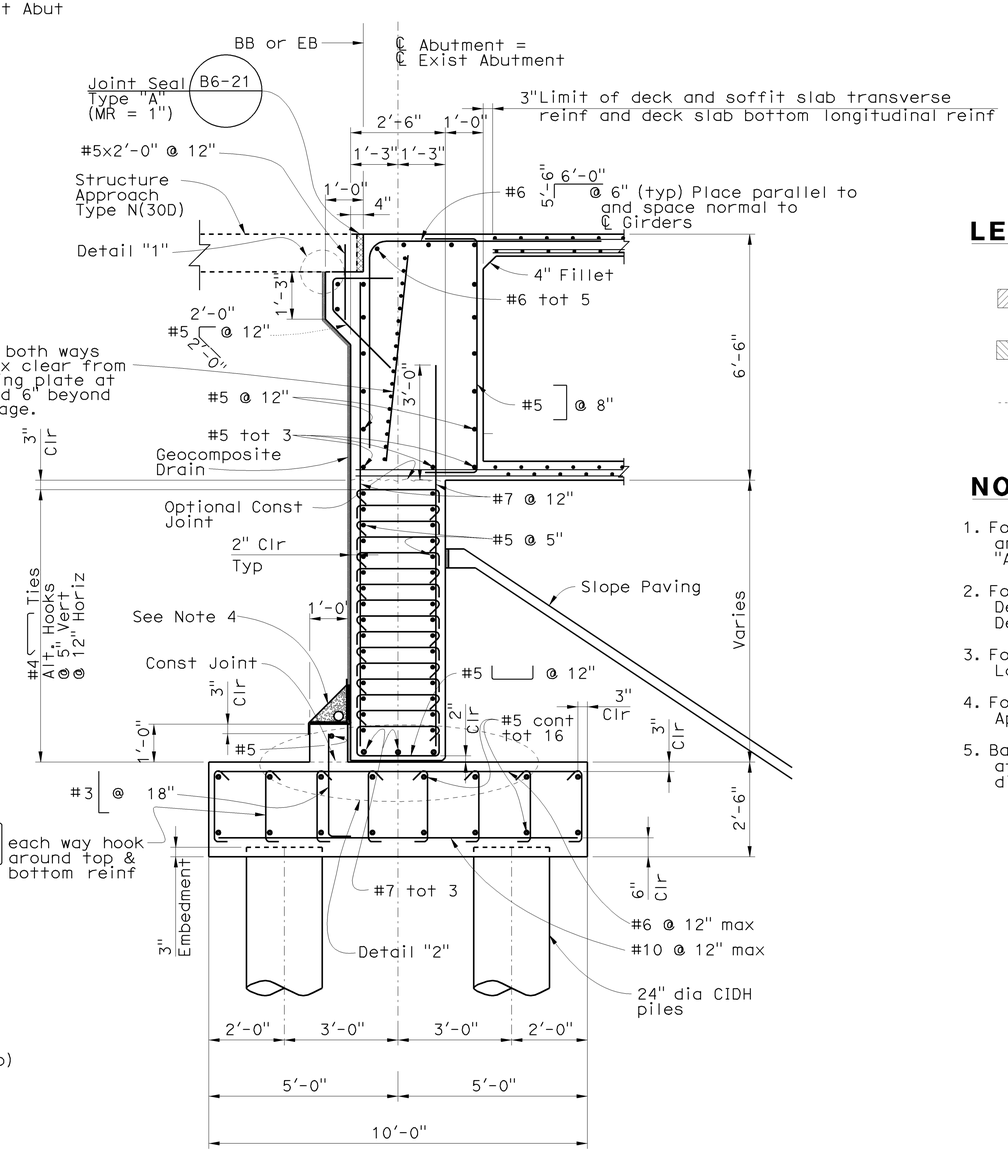

TYPICAL SECTION
1/2" = 1'-0"

LEGEND:

- Limits of Bridge Removal (portion)
- Closure Pour
- Indicates Existing Structure

NOTES:

1. For pile locations, footing dimensions and footing reinforcement details, see "Abutment Pile Layout" sheet.
2. For Internal Shear Key Details, Detail 1, Detail 2 and Section A-A, see "Abutment Details" sheet.
3. For Section C-C, see "Abutment 2 Layout" sheet.
4. For drainage behind abutment see "Structure Approach Drainage Details" sheet.
5. Backfill shall be placed simultaneously at both abutments with no more than 2 feet differential between abutments.

NOTE:
THE CONTRACTOR SHALL VERIFY ALL CONTROLLING FIELD DIMENSIONS BEFORE ORDERING OR FABRICATING ANY MATERIAL.

DESIGN OVERSIGHT — Jon Hanaguchi
6-24-09
SIGN OFF DATE

	BY	CHECKED
DESIGN	Chris Cho	T. A. Kirilov
DETAILS	J. Saldana	T. A. Kirilov
QUANTITIES	Chris Cho	H. Montoya

PREPARED FOR THE STATE OF CALIFORNIA DEPARTMENT OF TRANSPORTATION

Romeo M. Firme
PROJECT ENGINEER

BRIDGE NO. 55-0456
POST MILE 17.3

CHAPMAN AVENUE UC (WIDEN)
ABUTMENT 1 LAYOUT

DESIGN DETAIL SHEET (ENGLISH) (REV. 2/25/05)

ORIGINAL SCALE IN INCHES FOR REDUCED PLANS 0 1 2 3

CU 12
EA 0F0311

DISREGARD PRINTS BEARING EARLIER REVISION DATES — REVISION DATES (PRELIMINARY STAGE ONLY) 2/23/09 3/26/09 6/17/09

SHEET 7 OF 23

FILE => 55-0456-f-a01_101.dgn

USERNAME => trlenard DATE PLOTTED => 16-DEC-2009 TIME PLOTTED => 09:58

DIST	COUNTY	ROUTE	POST MILES TOTAL PROJECT	SHEET No	TOTAL SHEETS
12	Ora	57	16.2/18.6	808	960

REGISTERED CIVIL ENGINEER 6-17-09 DATE

12-14-09
PLANS APPROVAL DATE

REGISTERED PROFESSIONAL ENGINEER Romeo Firme No. C43929 Exp. 06/30/09 CIVIL STATE OF CALIFORNIA

The State of California or its officers or agents shall not be responsible for the accuracy or completeness of electronic copies of this plan sheet.

OCTA
550 S MAIN STREET
ORANGE, CA 92868

RBF CONSULTING
14725 ALTON PKWY
IRVINE, CA 92618

LEGEND:

Limits of Bridge Removal (portion)

Closure Pour

Indicates Existing Structure

NOTES:

1. For pile locations, footing dimension and footing reinforcement details, see "Abutment Pile Layout" sheet.
2. For Internal Shear Key Details, Detail 1, Detail 3 and Section A-A, see "Abutment Details" sheet.
3. For drainage behind abutment see "Structure Approach Drainage Details" sheet.
4. Backfill shall be placed simultaneously at both abutments with no more than 2 feet differential between abutments.

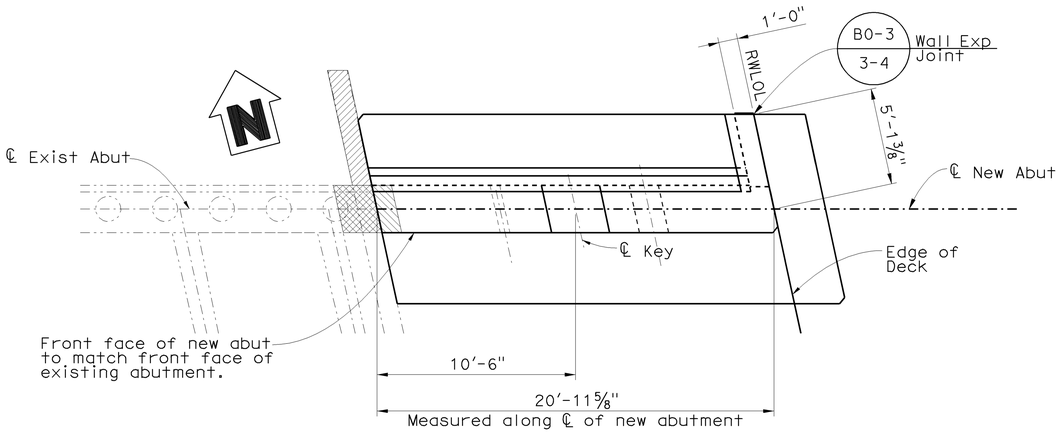

PLAN
1/4" = 1'-0"

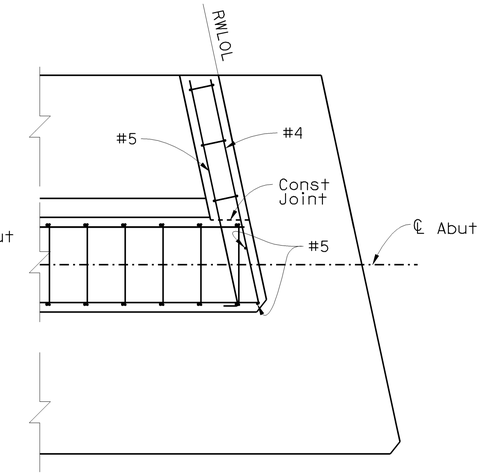

SECTION C-C
1/2" = 1'-0"

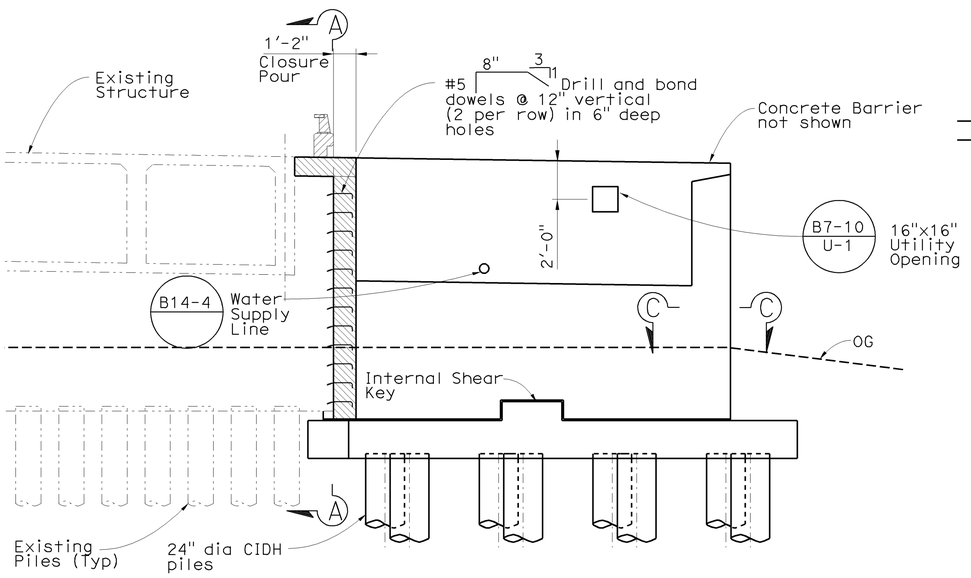

ELEVATION
1/4" = 1'-0"

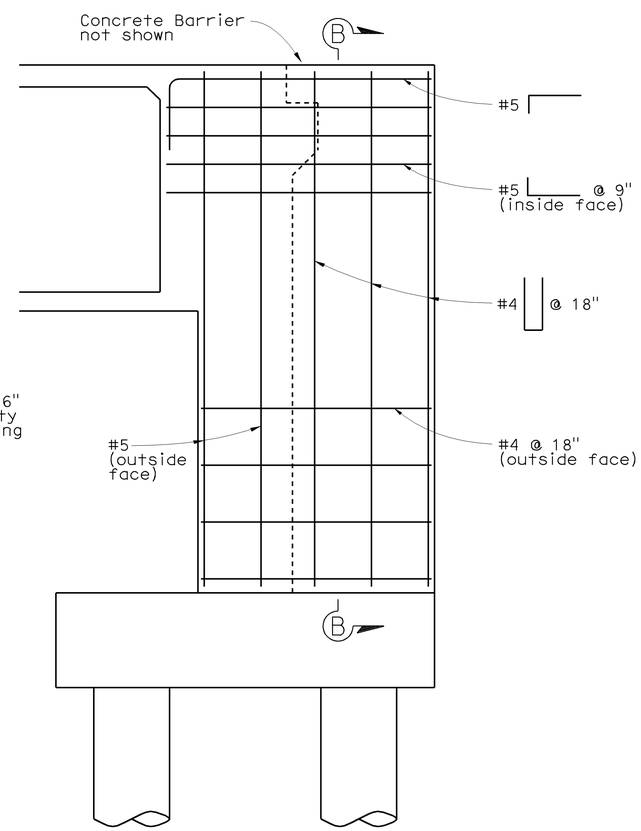

RETURN WALL ELEVATION
1/2" = 1'-0"

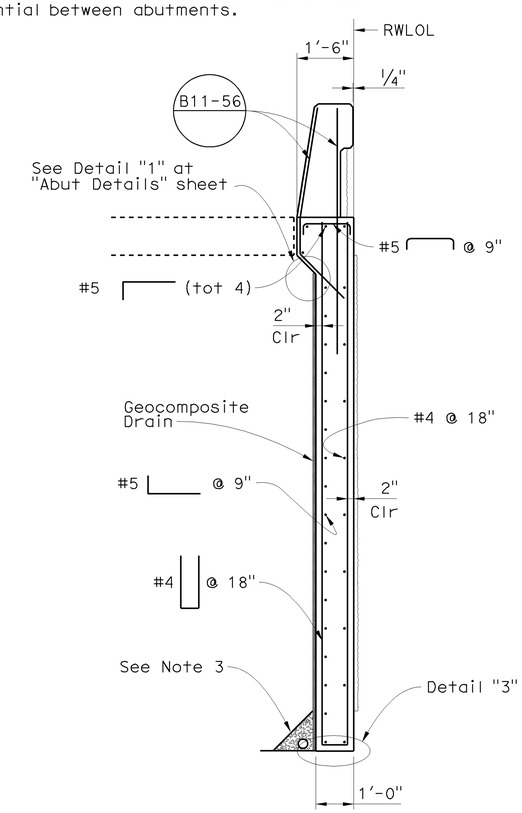

SECTION B-B
1/2" = 1'-0"

NOTE:
THE CONTRACTOR SHALL VERIFY ALL CONTROLLING FIELD DIMENSIONS BEFORE ORDERING OR FABRICATING ANY MATERIAL.

DESIGN OVERSIGHT Jon Hamaguchi
6-24-09
SIGN OFF DATE

	BY	CHECKED
DESIGN	Chris Cho	T. A. Kirilov
DETAILS	J. Saldana	T. A. Kirilov
QUANTITIES	Chris Cho	H. Montoya

PREPARED FOR THE STATE OF CALIFORNIA DEPARTMENT OF TRANSPORTATION

Romeo M. Firme
PROJECT ENGINEER

BRIDGE NO. 55-0456
POST MILE 17.3

CHAPMAN AVENUE UC (WIDEN)
ABUTMENT 2 LAYOUT

DESIGN DETAIL SHEET (ENGLISH) (REV. 2/25/05)

ORIGINAL SCALE IN INCHES FOR REDUCED PLANS 0 1 2 3

CU 12
EA 0F0311

DISREGARD PRINTS BEARING EARLIER REVISION DATES 2/13/09 4/16/09 6/17/09

REVISION DATES (PRELIMINARY STAGE ONLY)

SHEET 8 OF 23

FILE => 55-0456-f-a01_102.dgn

USERNAME => friehard DATE PLOTTED => 16-DEC-2009 TIME PLOTTED => 09:58

DIST	COUNTY	ROUTE	POST MILES TOTAL PROJECT	SHEET No	TOTAL SHEETS
12	Ora	57	16.2/18.6	809	960

REGISTERED CIVIL ENGINEER 6-17-09 DATE

12-14-09
PLANS APPROVAL DATE

REGISTERED PROFESSIONAL ENGINEER Romeo Firme No. C43929 Exp. 06/30/09 CIVIL STATE OF CALIFORNIA

The State of California or its officers or agents shall not be responsible for the accuracy or completeness of electronic copies of this plan sheet.

OCTA
550 S MAIN STREET
ORANGE, CA 92868

RBF CONSULTING
14725 ALTON PKWY
IRVINE, CA 92618

NOTES:

1. Bar hooks to be oriented to provide 3" min clearance to edge of footing. For piles at corners or near footing step, bar hooks may be oriented parallel to edge of footing.
2. No two adjacent piles can be constructed concurrently.

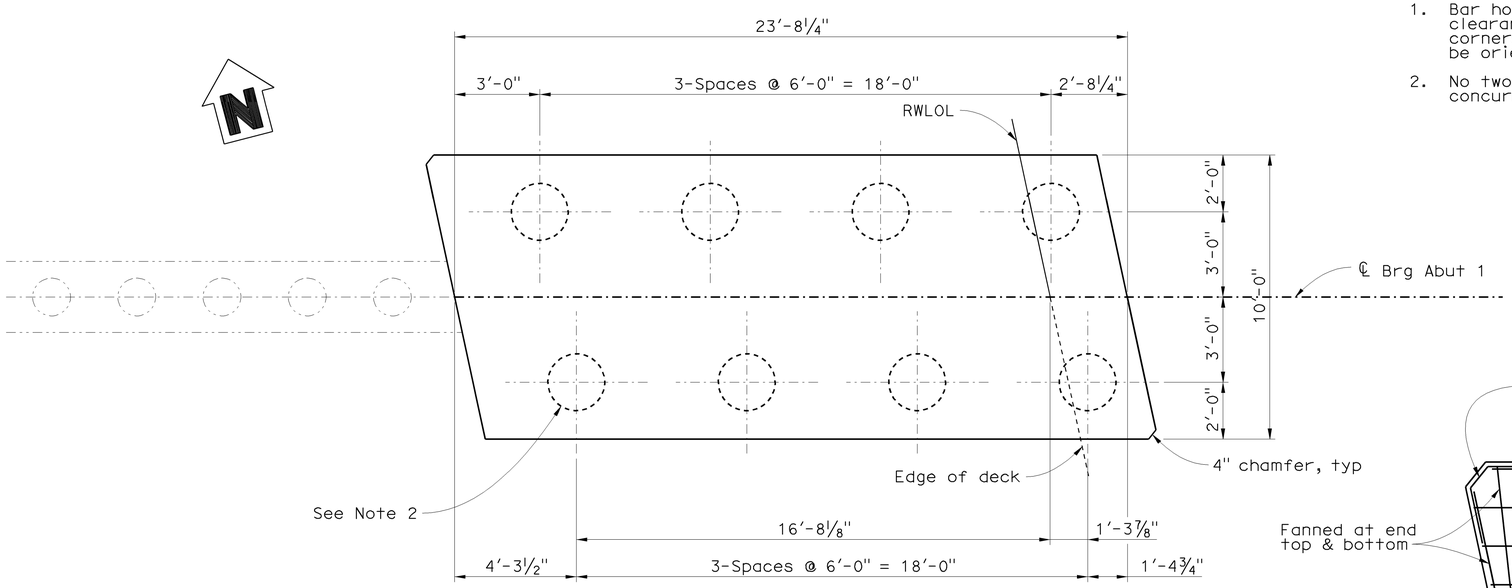

ABUTMENT 1 PLAN

⅜" = 1'-0"

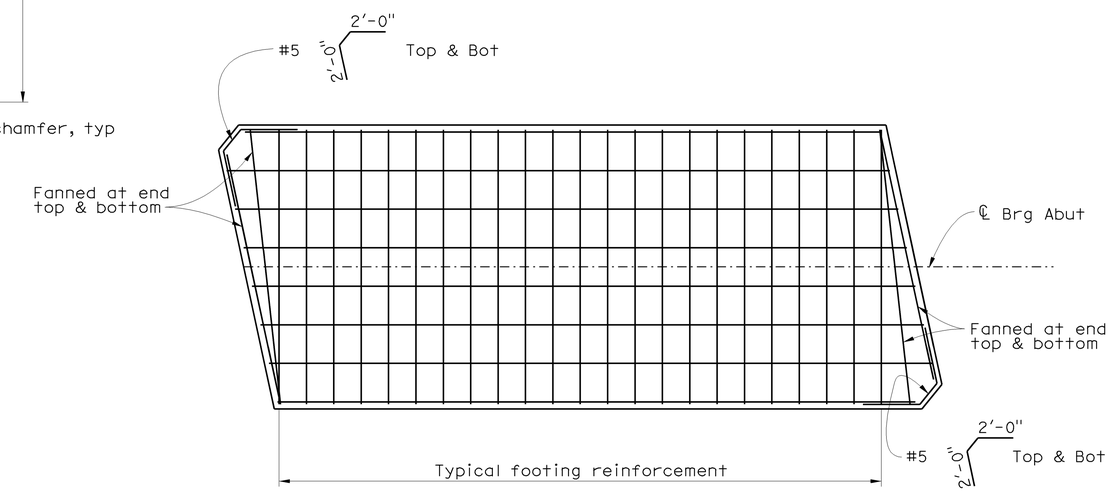

FOOTING REINFORCING DETAIL

⅜" = 1'-0"

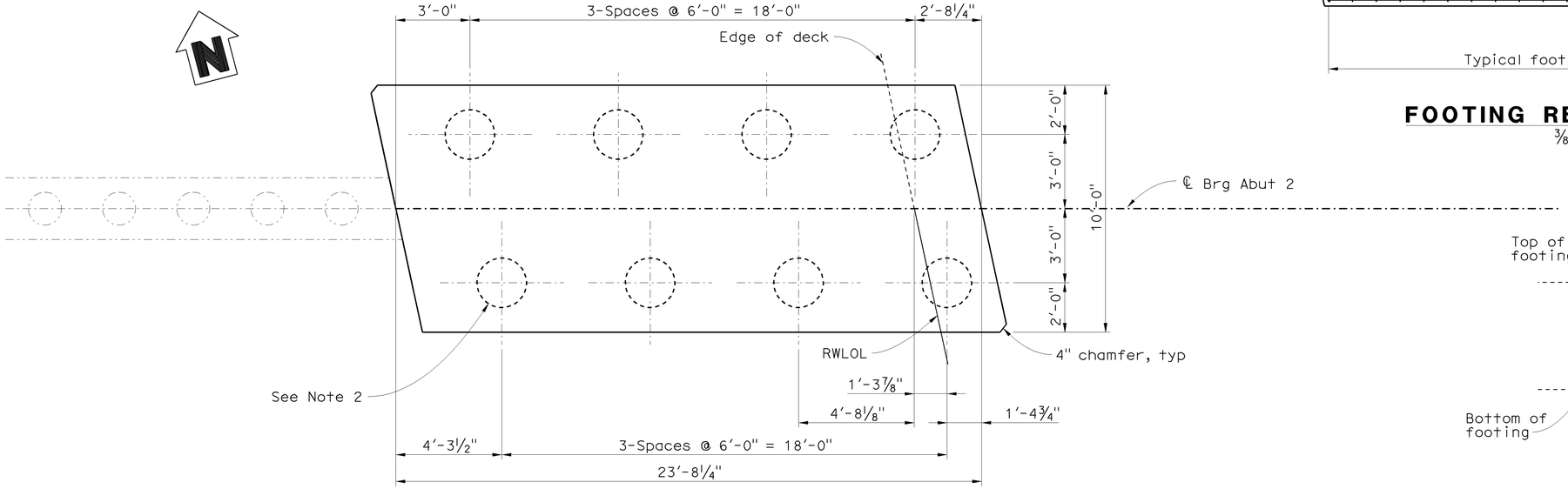

ABUTMENT 2 PLAN

⅜" = 1'-0"

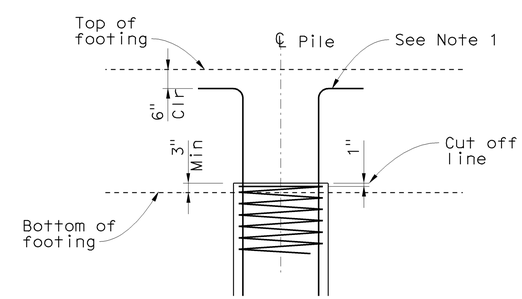

24" CIDH CONCRETE PILE

NO SCALE

NOTE:
THE CONTRACTOR SHALL VERIFY ALL CONTROLLING FIELD DIMENSIONS BEFORE ORDERING OR FABRICATING ANY MATERIAL.

DESIGN OVERSIGHT Jon Hamaguchi
6-24-09
SIGN OFF DATE

DESIGN DETAIL SHEET (ENGLISH) (REV. 2/25/05)

	BY	CHECKED
DESIGN	Chris Cho	T. A. Kirilov
DETAILS	J. Saldana	T. A. Kirilov
QUANTITIES	Chris Cho	H. Montoya

ORIGINAL SCALE IN INCHES FOR REDUCED PLANS 0 1 2 3

PREPARED FOR THE STATE OF CALIFORNIA DEPARTMENT OF TRANSPORTATION

Romeo M. Firme
PROJECT ENGINEER

CU 12
EA 0F0311

BRIDGE NO. 55-0456
POST MILE 17.3

CHAPMAN AVENUE UC (WIDEN)
ABUTMENT PILE LAYOUT

DISREGARD PRINTS BEARING EARLIER REVISION DATES

REVISION DATES (PRELIMINARY STAGE ONLY) 2/13/09 4/06/09 6/17/09

SHEET 9 OF 23

FILE => 55-0456-f-a01dt01.dgn

USERNAME => trlehard DATE PLOTTED => 16-DEC-2009 TIME PLOTTED => 09:58

DIST	COUNTY	ROUTE	POST MILES TOTAL PROJECT	SHEET No	TOTAL SHEETS
12	Ora	57	16.2/18.6	810	960

REGISTERED CIVIL ENGINEER 6-17-09 DATE

12-14-09
PLANS APPROVAL DATE

REGISTERED PROFESSIONAL ENGINEER Romeo Firme No. C43929 Exp. 06/30/09 CIVIL STATE OF CALIFORNIA

The State of California or its officers or agents shall not be responsible for the accuracy or completeness of electronic copies of this plan sheet.

OCTA
550 S MAIN STREET
ORANGE, CA 92868

RBF CONSULTING
14725 ALTON PKWY
IRVINE, CA 92618

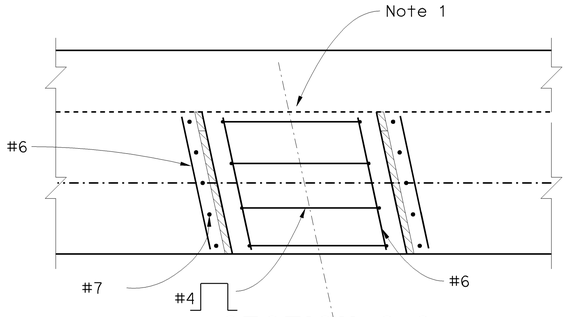

SECTION S-S

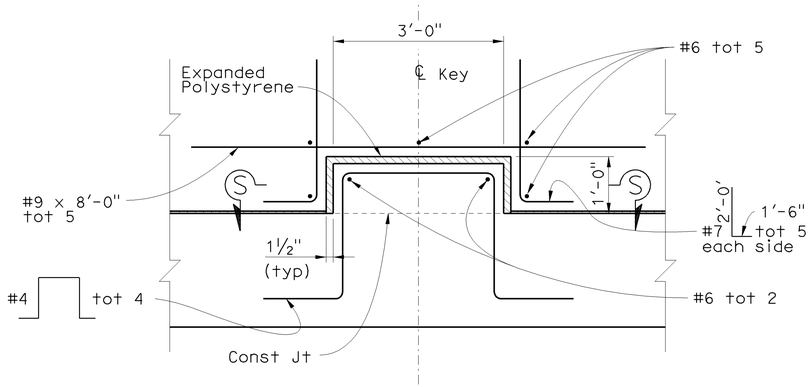

INTERNAL SHEAR KEY

¾" = 1'-0"

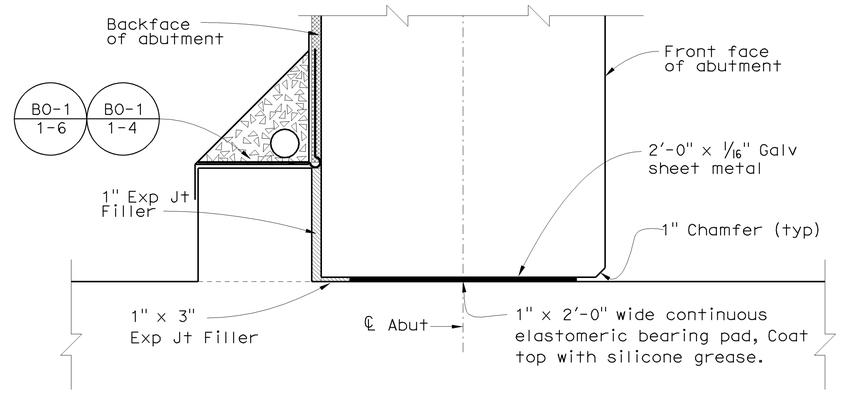

DETAIL "2"

No Scale

NOTES:

1. Mandatory joint surface to be smooth finish and lined with 15 pound construction paper.

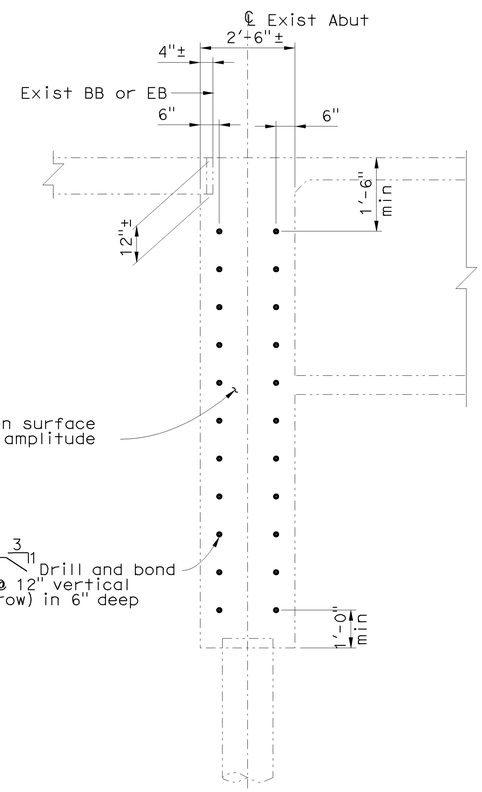

SECTION A-A

½" = 1'-0"

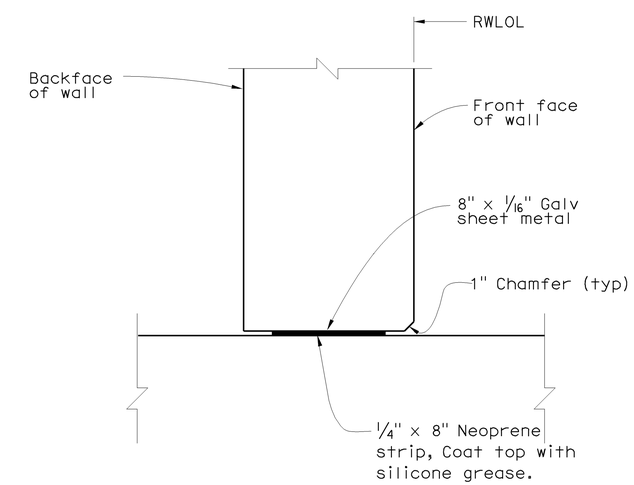

DETAIL "3"

No Scale

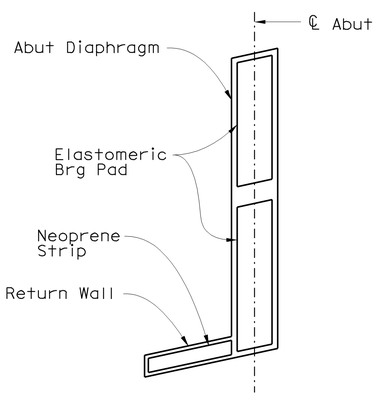

ELASTOMERIC BEARING PAD & NEOPRENE KEY PLAN

NO SCALE

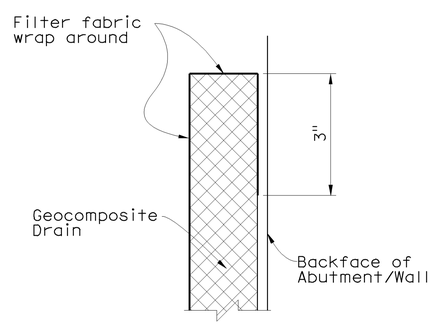

DETAIL "1"

No Scale

NOTE:
THE CONTRACTOR SHALL VERIFY ALL CONTROLLING FIELD DIMENSIONS BEFORE ORDERING OR FABRICATING ANY MATERIAL.

DESIGN OVERSIGHT Jon Hamaguchi
6-24-09
SIGN OFF DATE

	BY	CHECKED
DESIGN	Chris Cho	T. A. Kirilov
DETAILS	J. Saldana	T. A. Kirilov
QUANTITIES	Chris Cho	H. Montoya

PREPARED FOR THE STATE OF CALIFORNIA DEPARTMENT OF TRANSPORTATION

Romeo M. Firme
PROJECT ENGINEER

BRIDGE NO. 55-0456
POST MILE 17.3

CHAPMAN AVENUE UC (WIDEN)

ABUTMENT DETAILS

DESIGN DETAIL SHEET (ENGLISH) (REV. 2/25/05)

ORIGINAL SCALE IN INCHES FOR REDUCED PLANS 0 1 2 3

CU 12
EA 0F0311

DISREGARD PRINTS BEARING EARLIER REVISION DATES

REVISION DATES (PRELIMINARY STAGE ONLY) 2/13/09 4/16/09 6/17/09

SHEET 10 OF 23

FILE => 55-0456-f-a01dt02.dgn

USERNAME => rfirmikest DATE PLOTTED => 23-DEC-2009 TIME PLOTTED => 14:02

DIST	COUNTY	ROUTE	POST MILES TOTAL PROJECT	SHEET No	TOTAL SHEETS
12	Ora	57	16.2/18.6	811	960

REGISTERED CIVIL ENGINEER 6-17-09 DATE

12-14-09
PLANS APPROVAL DATE

REGISTERED PROFESSIONAL ENGINEER Romeo Firme No. C43929 Exp. 06/30/09 CIVIL STATE OF CALIFORNIA

The State of California or its officers or agents shall not be responsible for the accuracy or completeness of electronic copies of this plan sheet.

OCTA
550 S MAIN STREET
ORANGE, CA 92868

RBF CONSULTING
14725 ALTON PKWY
IRVINE, CA 92618

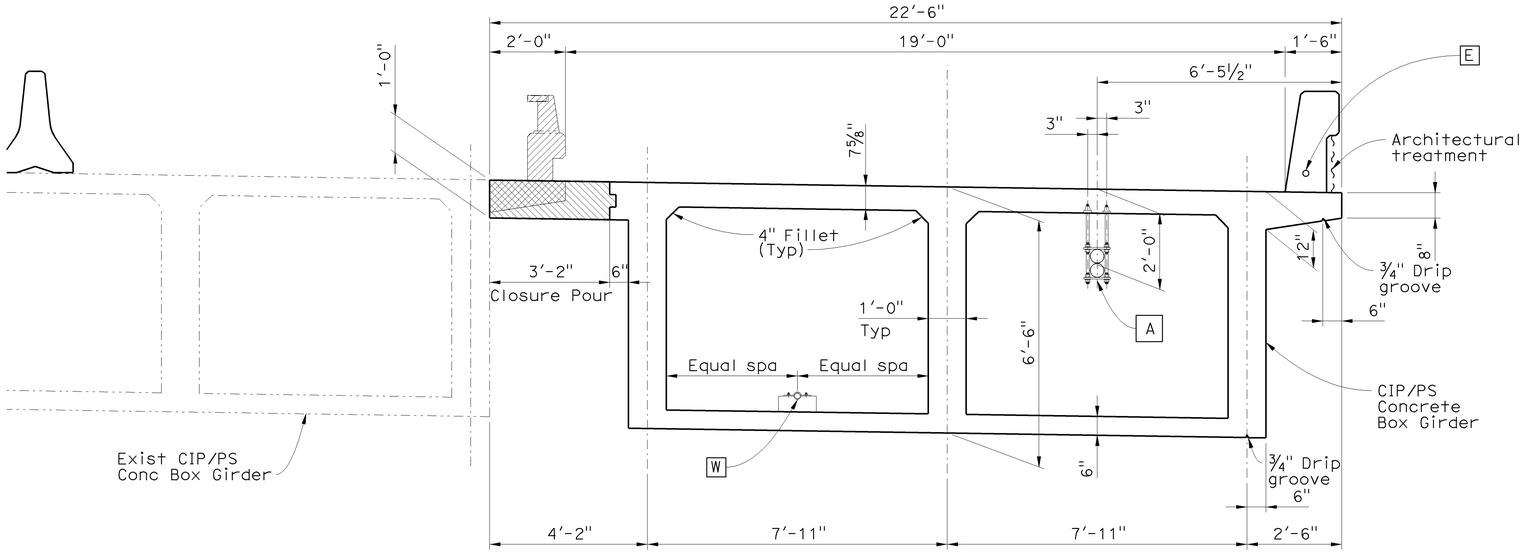

TYPICAL SECTION

½" = 1'-0"

UTILITIES:

A Relocated fiber optic lines, see "Additional Girder Reinforcement"

E 2" electrical conduit

W 3" Water Supply Line

NOTES:

1. Reinforcing shall be made continuous and meet "Service Splice " requirements.

2. Replace any damage exist transverse deck reinf with an additional #5 1 3 3'-0" drill & bond dowel into 6" hole.

3. Falsework Release:
   Alternative 1:
   Falsework shall be released as soon as permitted by the specifications. Closure pour shall not be placed sooner than 60 days after the falsework has been released.
   Alternative 2:
   Falsework shall not be released less than 28 days after the last concrete has been placed. Closure pour shall not be placed sooner than 14 days after the falsework has been released. When Falsework Alternative 2 is used, camber values are 0.75 times those shown.

4. For additional girder reinforcement and architectural treatment, see "Additional Girder Reinforcement" sheet.

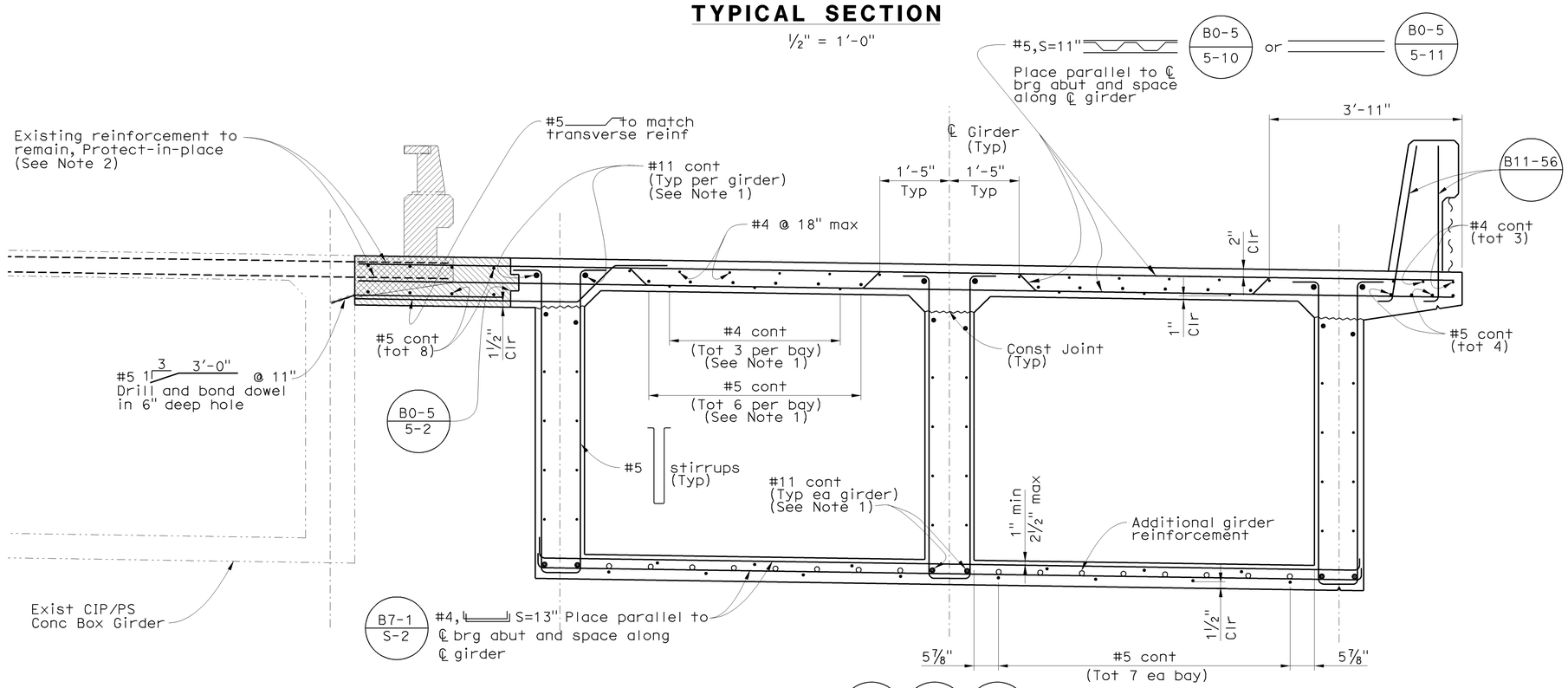

PART TYPICAL SECTION

¾" = 1'-0"

B0-5 B7-1 B8-5

NOTE:
THE CONTRACTOR SHALL VERIFY ALL CONTROLLING FIELD DIMENSIONS BEFORE ORDERING OR FABRICATING ANY MATERIAL.

LEGEND:

- Limits of Bridge Removal (portion)
- Closure Pour
- Indicates Existing Structure
- • Indicates continuous slab reinforcement
- ○ Indicates additional girder reinforcement

DESIGN OVERSIGHT Jon Hamaguchi
6-24-09
SIGN OFF DATE

	BY	CHECKED
DESIGN	Chris Cho	T. A. Kirilov
DETAILS	J. Saldana	T. A. Kirilov
QUANTITIES	Chris Cho	H. Montoya

PREPARED FOR THE STATE OF CALIFORNIA DEPARTMENT OF TRANSPORTATION

Romeo M. Firme
PROJECT ENGINEER

BRIDGE NO. 55-0456
POST MILE 17.3

CHAPMAN AVENUE UC (WIDEN)

TYPICAL SECTION

DESIGN DETAIL SHEET (ENGLISH) (REV. 2/25/05)

ORIGINAL SCALE IN INCHES FOR REDUCED PLANS 0 1 2 3

CU 12
EA 0F0311

DISREGARD PRINTS BEARING EARLIER REVISION DATES

REVISION DATES (PRELIMINARY STAGE ONLY) 2/23/09 3/16/09 6/17/09

SHEET 11 OF 23

FILE => 55-0456-k-ts01.dgn

USERNAME => trlenard DATE PLOTTED => 16-DEC-2009 TIME PLOTTED => 09:58

DIST	COUNTY	ROUTE	POST MILES TOTAL PROJECT	SHEET No	TOTAL SHEETS
12	Ora	57	16.2/18.6	812	960

REGISTERED CIVIL ENGINEER 6-17-09 DATE

12-14-09
PLANS APPROVAL DATE

REGISTERED PROFESSIONAL ENGINEER Romeo Firme No. C43929 Exp. 06/30/09 CIVIL STATE OF CALIFORNIA

The State of California or its officers or agents shall not be responsible for the accuracy or completeness of electronic copies of this plan sheet.

OCTA
550 S MAIN STREET
ORANGE, CA 92868

RBF CONSULTING
14725 ALTON PKWY
IRVINE, CA 92618

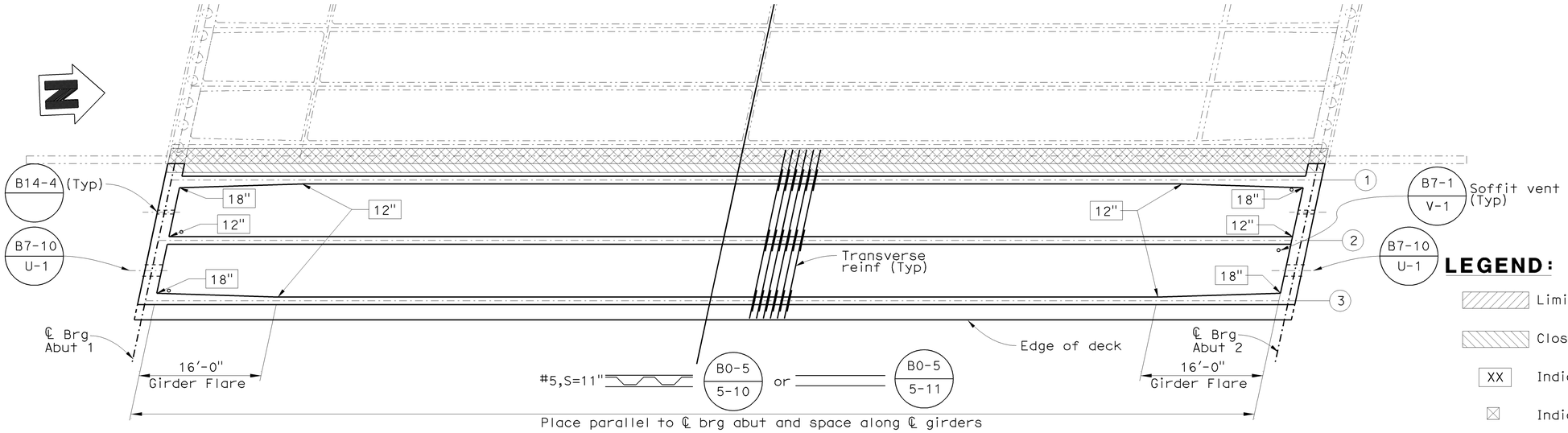

GIRDER LAYOUT

1/8" = 1'-0"

LEGEND:

- Limits of Bridge Removal (portion)
- Closure Pour
- XX — Indicates girder stem width in inches
- ⊠ — Indicates point of no movement
- (1) — Indicates girder number

PRESTRESSING NOTES:

270 KSI Low Relaxation Strand:

P_{jack} = 7168 kips

Anchor Set = 3/8 in

Total Number of Girders = 3

Distribution of prestress force (Pjack) between girders shall not exceed the ratio of 3:2. Maximum final force variation between girders shall not exceed 725 kips.

Concrete: f'_c = 5,500 psi @ 28 days

f'_{ci} = 4,500 psi @ time of stressing

Contractor shall submit elongation calculations based on initial stress at

⊠ = 0.952 times jacking stress.

One end stressing shall be performed from abutment 1 end

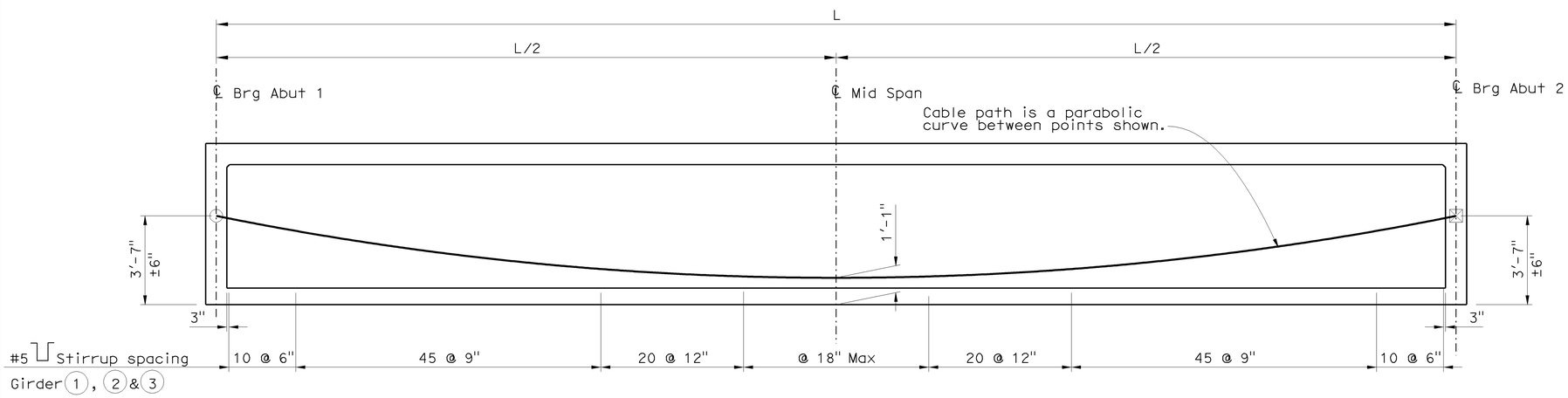

LONGITUDINAL SECTION

No Scale

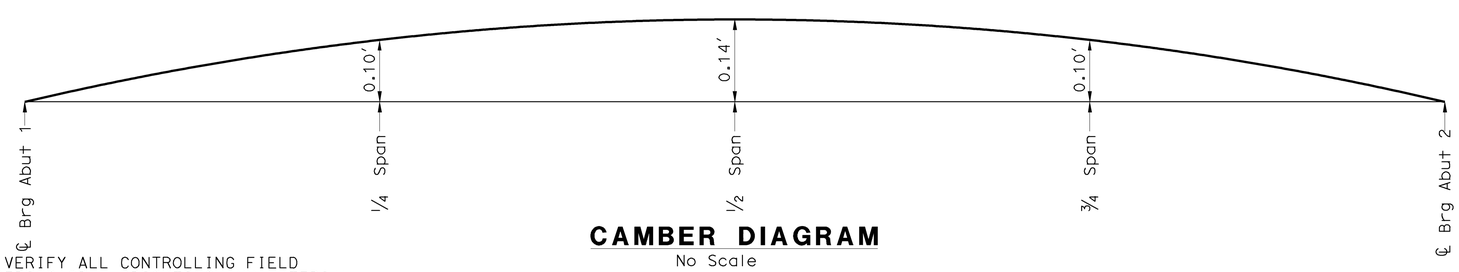

CAMBER DIAGRAM

No Scale

NOTE:
THE CONTRACTOR SHALL VERIFY ALL CONTROLLING FIELD DIMENSIONS BEFORE ORDERING OR FABRICATING ANY MATERIAL.

DESIGN OVERSIGHT Jon Hamaguchi
6-24-09
SIGN OFF DATE

DESIGN DETAIL SHEET (ENGLISH) (REV. 2/25/05)

	BY	CHECKED
DESIGN	M. Strahota	T. A. Kirilov
DETAILS	J. Saldana	T. A. Kirilov
QUANTITIES	Chris Cho	H. Montoya

ORIGINAL SCALE IN INCHES FOR REDUCED PLANS 0 1 2 3

PREPARED FOR THE STATE OF CALIFORNIA DEPARTMENT OF TRANSPORTATION

Romeo M. Firme
PROJECT ENGINEER

CU 12
EA 0F0311

BRIDGE NO. 55-0456
POST MILE 17.3

CHAPMAN AVENUE UC (WIDEN)

GIRDER LAYOUT

DISREGARD PRINTS BEARING EARLIER REVISION DATES

REVISION DATES (PRELIMINARY STAGE ONLY) 2/13/09 4/16/09 6/17/09

SHEET 12 OF 23

FILE => 55-0456-1-g_1o01.dgn

USERNAME => friehard DATE PLOTTED => 16-DEC-2009 TIME PLOTTED => 09:58

DIST	COUNTY	ROUTE	POST MILES TOTAL PROJECT	SHEET No	TOTAL SHEETS
12	Ora	57	16.2/18.6	813	960

REGISTERED CIVIL ENGINEER 6-17-09 DATE

12-14-09
PLANS APPROVAL DATE

REGISTERED PROFESSIONAL ENGINEER Romeo Firme No. C43929 Exp. 06/30/09 CIVIL STATE OF CALIFORNIA

The State of California or its officers or agents shall not be responsible for the accuracy or completeness of electronic copies of this plan sheet.

OCTA
550 S MAIN STREET
ORANGE, CA 92868

RBF CONSULTING
14725 ALTON PKWY
IRVINE, CA 92618

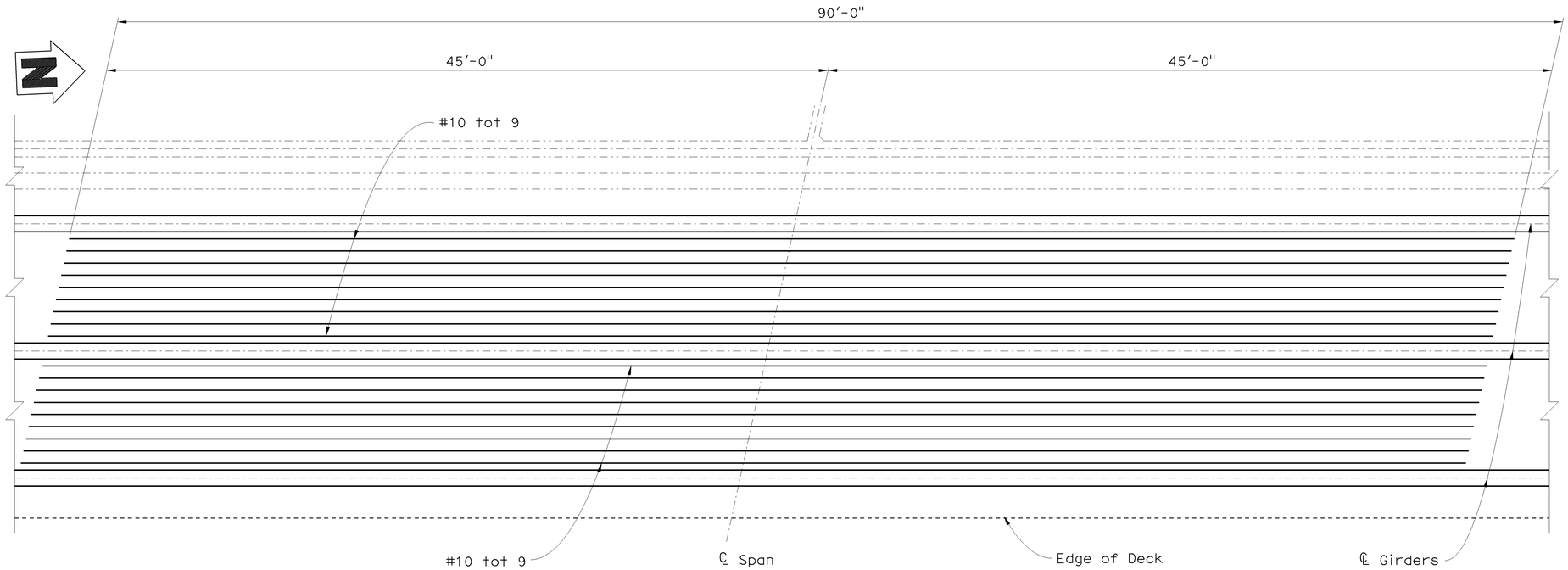

ADDITIONAL BOTTOM SLAB LONGITUDINAL REINFORCEMENT

1/4" = 1'-0"

NOTES:

1. All the Main Girder reinforcement shall meet "Service Splice" requirements.
2. Additional bottom slab girder reinforcement shall be equally spaced within bays.

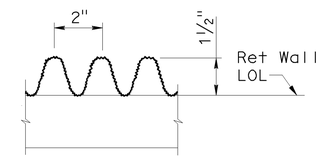

FRACTURED RIB TEXTURE (PROJECTING)

No Scale

Anvil insert Fig 282 or approved equal. Insert to be installed level longitudinally and transversely. Place insert to provide for transverse adjustment of hanger rods. 2 EA at 10'-0" Max centers

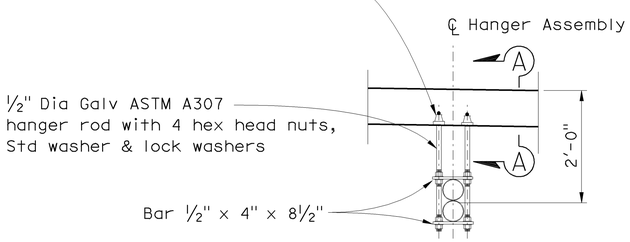

FIBER OPTIC CONDUIT HANGER SUPPORT DETAIL

3/4" = 1'-0"

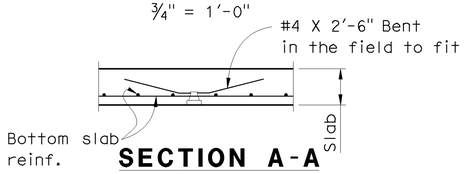

SECTION A-A

3/4" = 1'-0"

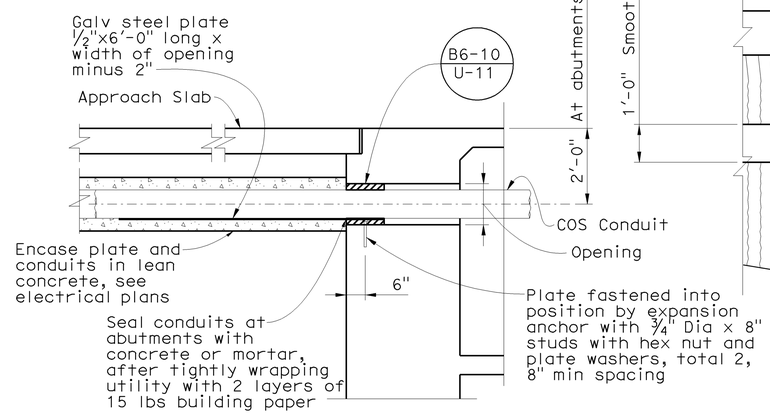

DETAIL AT ABUTMENT OPENING FOR FIBER OPTIC CONDUIT

1/2" = 1'-0"

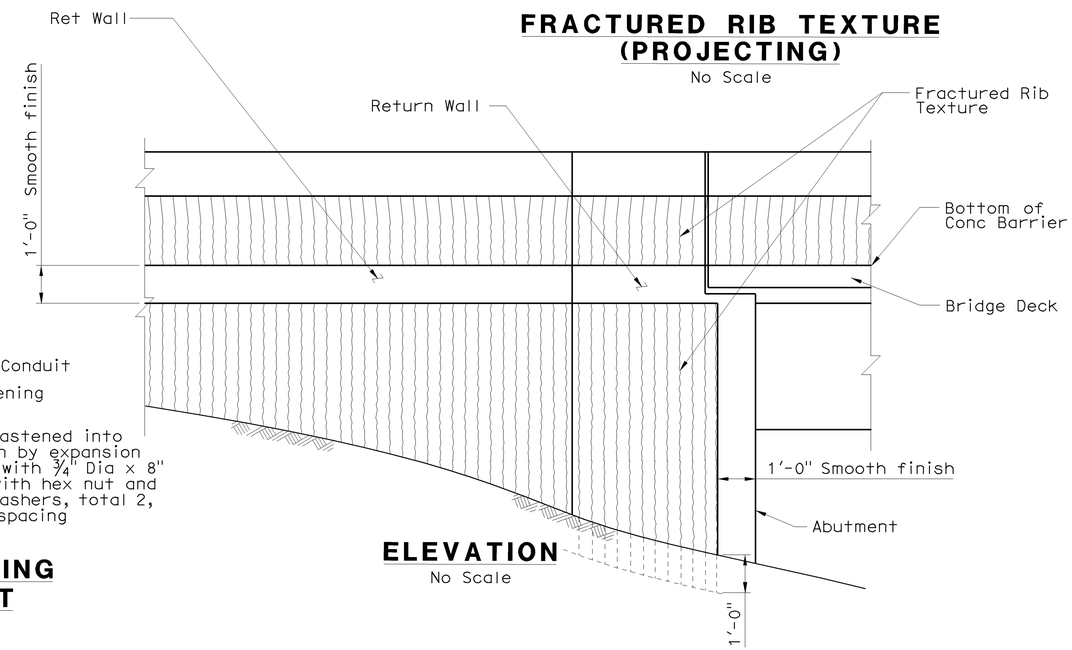

ELEVATION

No Scale

NOTE:
THE CONTRACTOR SHALL VERIFY ALL CONTROLLING FIELD DIMENSIONS BEFORE ORDERING OR FABRICATING ANY MATERIAL.

DESIGN OVERSIGHT Jon Hamaguchi
6-24-09
SIGN OFF DATE

	BY	CHECKED
DESIGN	Chris Cho	T. A. Kirilov
DETAILS	J. Saldana	T. A. Kirilov
QUANTITIES	Chris Cho	H. Montoya

PREPARED FOR THE STATE OF CALIFORNIA DEPARTMENT OF TRANSPORTATION

Romeo M. Firme
PROJECT ENGINEER

BRIDGE NO. 55-0456
POST MILE 17.3

CHAPMAN AVENUE UC (WIDEN)
ADDITIONAL GIRDER REINFORCEMENT

DESIGN DETAIL SHEET (ENGLISH) (REV. 2/25/05)

ORIGINAL SCALE IN INCHES FOR REDUCED PLANS 0 1 2 3

CU 12
EA 0F0311

DISREGARD PRINTS BEARING EARLIER REVISION DATES

REVISION DATES (PRELIMINARY STAGE ONLY) 2/23/09 3/26/09 6/17/09

SHEET 13 OF 23

FILE => 55-0456-1-gdt01.dgn

USERNAME => trlenard DATE PLOTTED => 16-DEC-2009 TIME PLOTTED => 09:58

DIST	COUNTY	ROUTE	POST MILES TOTAL PROJECT	SHEET No	TOTAL SHEETS
12	Ora	57	16.2/18.6	814	960

REGISTERED CIVIL ENGINEER 6-17-09 DATE

12-14-09
PLANS APPROVAL DATE

REGISTERED PROFESSIONAL ENGINEER Romeo Firme No. C43929 Exp. 08/30/09 CIVIL STATE OF CALIFORNIA

The State of California or its officers or agents shall not be responsible for the accuracy or completeness of electronic copies of this plan sheet.

OCTA
550 S MAIN STREET
ORANGE, CA 92868

RBF CONSULTING
14725 ALTON PKWY
IRVINE, CA 92618

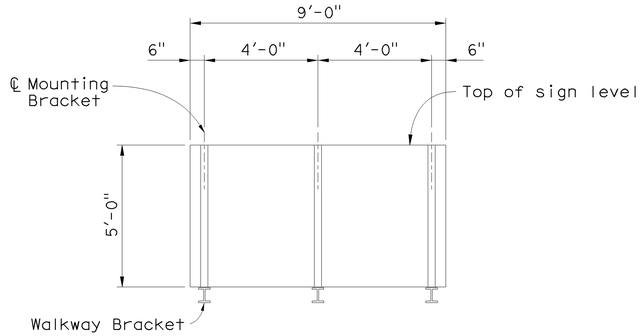

MOUNTING BRACKET ASSEMBLY SPACING

Scale: 3/8" = 1'-0"

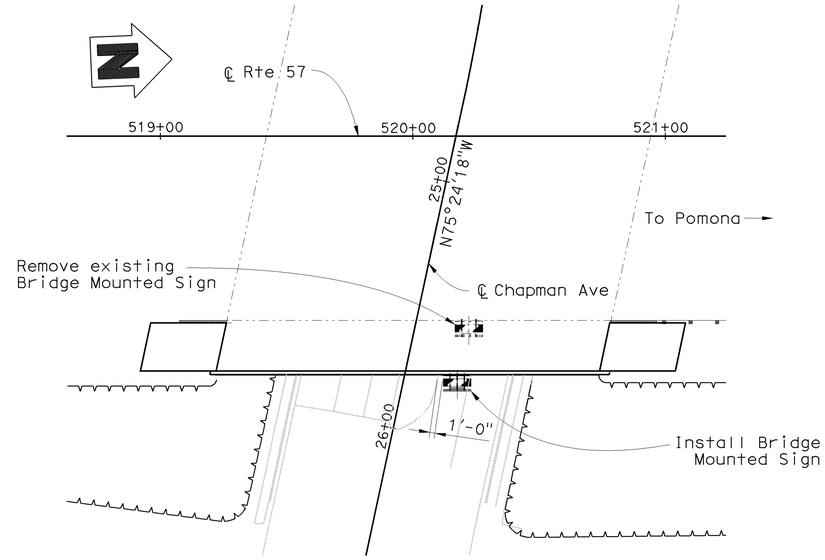

LOCATION PLAN

Scale: 1" = 30'

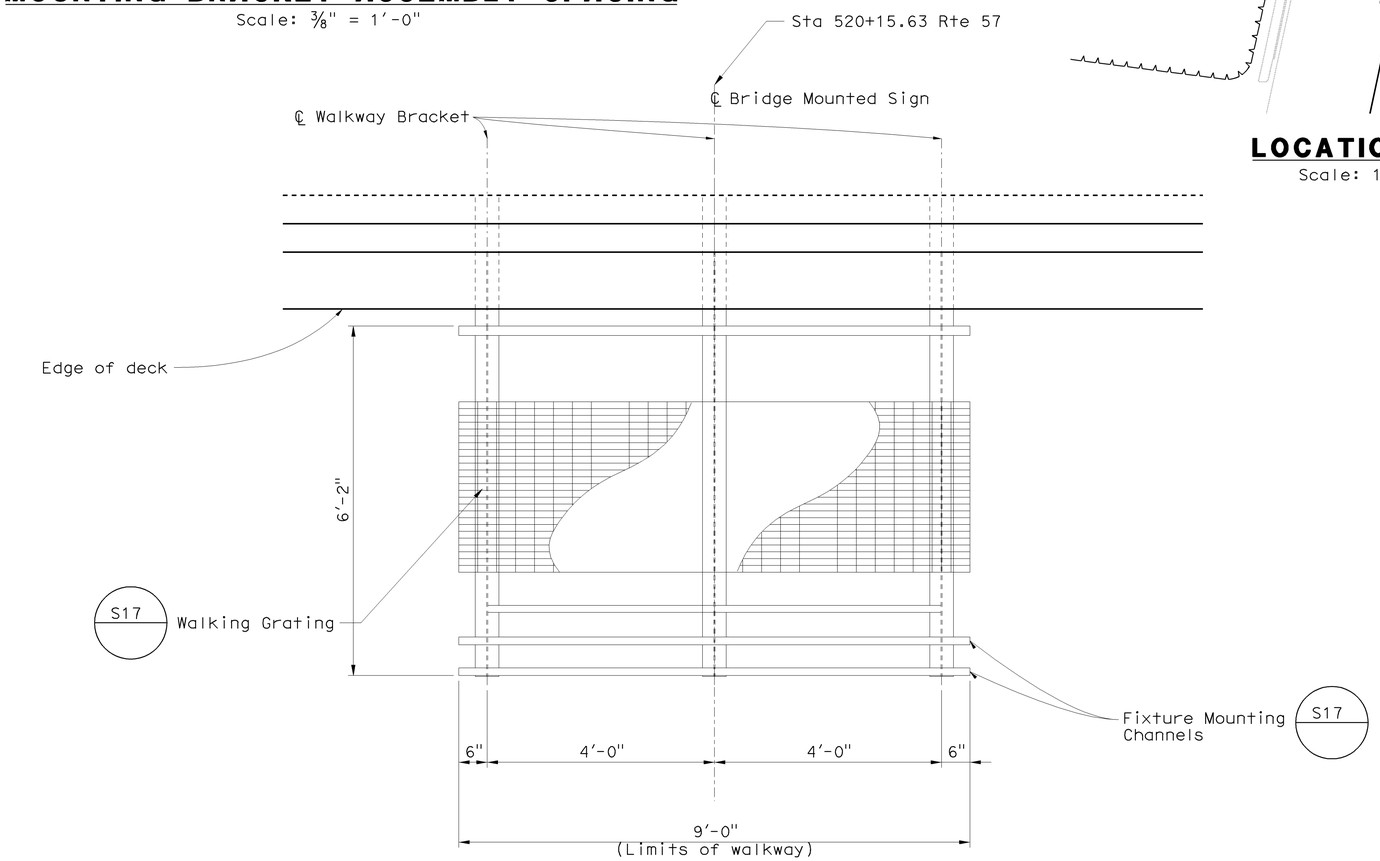

LAYOUT

Scale: 3/4" = 1'-0"

NOTES:

1. For details not shown see "Standard Plans"
2. Unless otherwise shown all steel shall be galvanized after fabrication.
3. All high strength (H.S.) bolts shall be wrench tightened.
4. Min size fillet weld is 1/4" or smaller piece thickness unless noted otherwise.
5. Contractor to provide Anchor Bolt Layout before Anchor Bolts are placed.
6. Special care shall be taken to insure that the complete hinge and latch assembly will hold the safety railing in a steady manner, free of wobble while in a raised position. Max allowable displacement from vertical at top of railing when latched shall be 1".
7. Safety chain shall be 1/4" galvanized steel coil chain, approximately 12 links per foot. Length shall be min which allows lock-up of safety railing. Min of two safety chains at each end of safety railing. Material shall be Grade A3 high test chain ASTM A413.

NOTE:
THE CONTRACTOR SHALL VERIFY ALL CONTROLLING FIELD DIMENSIONS BEFORE ORDERING OR FABRICATING ANY MATERIAL.

DESIGN OVERSIGHT Jon Hamaguchi
6-24-09
SIGN OFF DATE

	BY	CHECKED
DESIGN	Chris Cho	Tihomir Kirilov
DETAILS	Chris Cho	Tihomir Kirilov
QUANTITIES	Chris Cho	Hernan Montoya

PREPARED FOR THE STATE OF CALIFORNIA DEPARTMENT OF TRANSPORTATION

Romeo M. Firme
PROJECT ENGINEER

BRIDGE NO. 55-0456
POST MILE 17.3

CHAPMAN AVENUE UC (WIDEN)

BRIDGE MOUNTED SIGN DETAILS NO. 1

DESIGN DETAIL SHEET (ENGLISH) (REV. 2/25/05)

ORIGINAL SCALE IN INCHES FOR REDUCED PLANS 0 1 2 3

CU 12
EA 0F0311

DISREGARD PRINTS BEARING EARLIER REVISION DATES

REVISION DATES (PRELIMINARY STAGE ONLY) 2/13/09 5/17/09

SHEET 14 OF 23

FILE => 55-0456-u-sign01.dgn

USERNAME => friehard DATE PLOTTED => 16-DEC-2009 TIME PLOTTED => 09:58

DIST	COUNTY	ROUTE	POST MILES TOTAL PROJECT	SHEET No	TOTAL SHEETS
12	Ora	57	16.2/18.6	815	960

REGISTERED CIVIL ENGINEER — DATE 6-17-09

12-14-09
PLANS APPROVAL DATE

REGISTERED PROFESSIONAL ENGINEER — Romeo Firme No. C43929 Exp. 08/30/09 CIVIL — STATE OF CALIFORNIA

The State of California or its officers or agents shall not be responsible for the accuracy or completeness of electronic copies of this plan sheet.

OCTA
550 S MAIN STREET
ORANGE, CA 92868

RBF CONSULTING
14725 ALTON PKWY
IRVINE, CA 92618

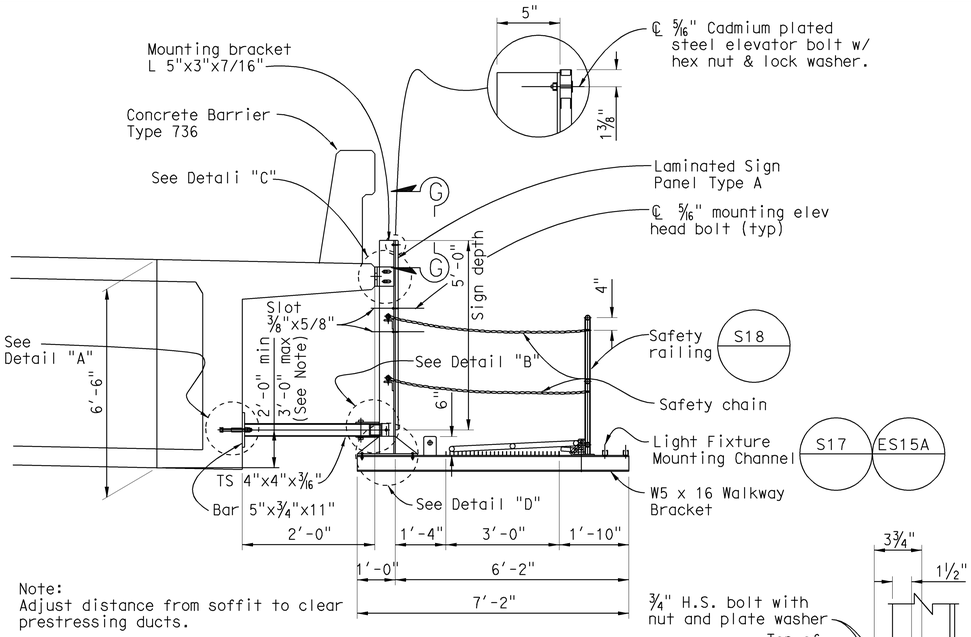

Note:
Adjust distance from soffit to clear prestressing ducts.

TYPICAL SECTION

No Scale

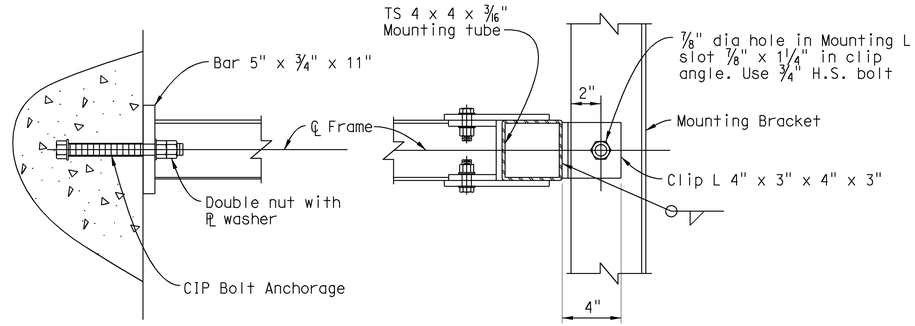

DETAIL "A"

DETAIL "B"

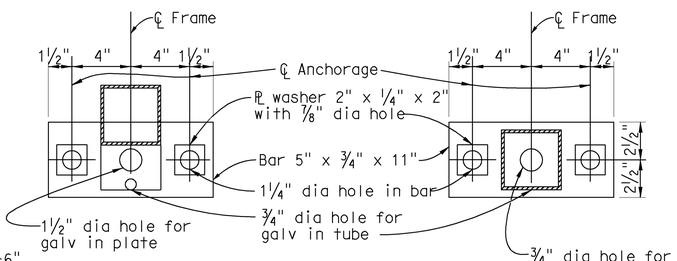

BOTTOM

TOP

ANCHOR PLATE DETAILS

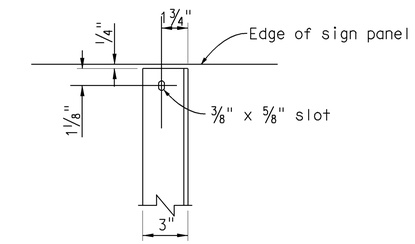

SECTION G-G

NOTE: For notes, See "General Plan" sheet.

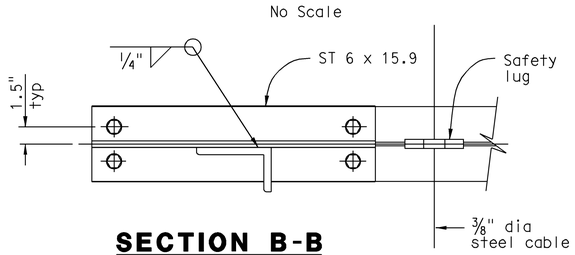

SECTION B-B

No Scale

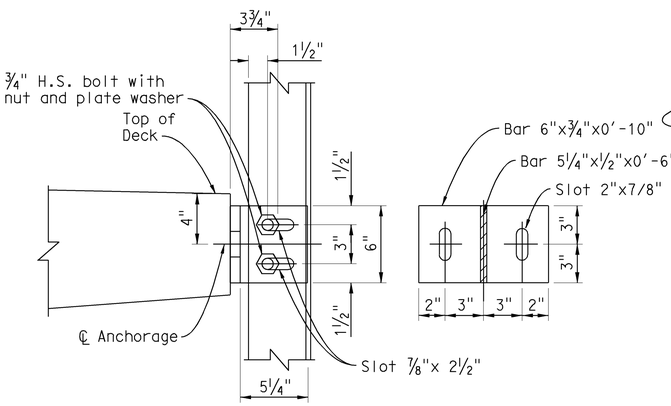

DETAIL C

No Scale

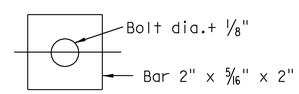

PLATE WASHER

No Scale

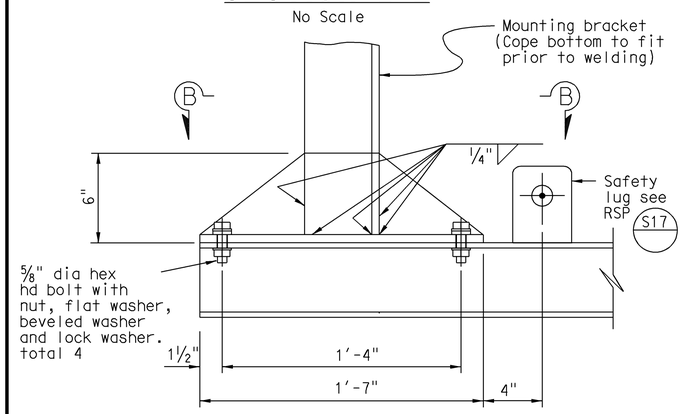

DETAIL D

No Scale

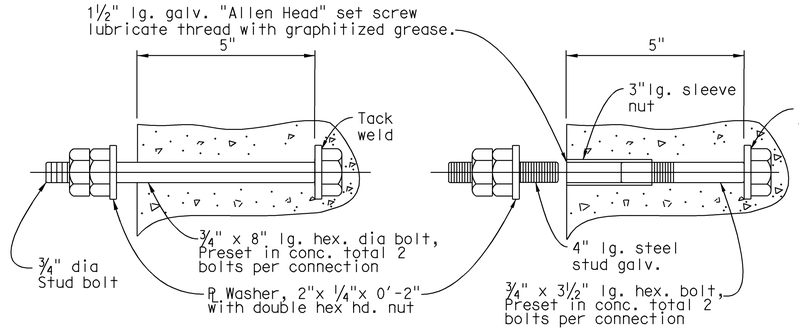

CIP BOLT ANCHORAGE

No Scale

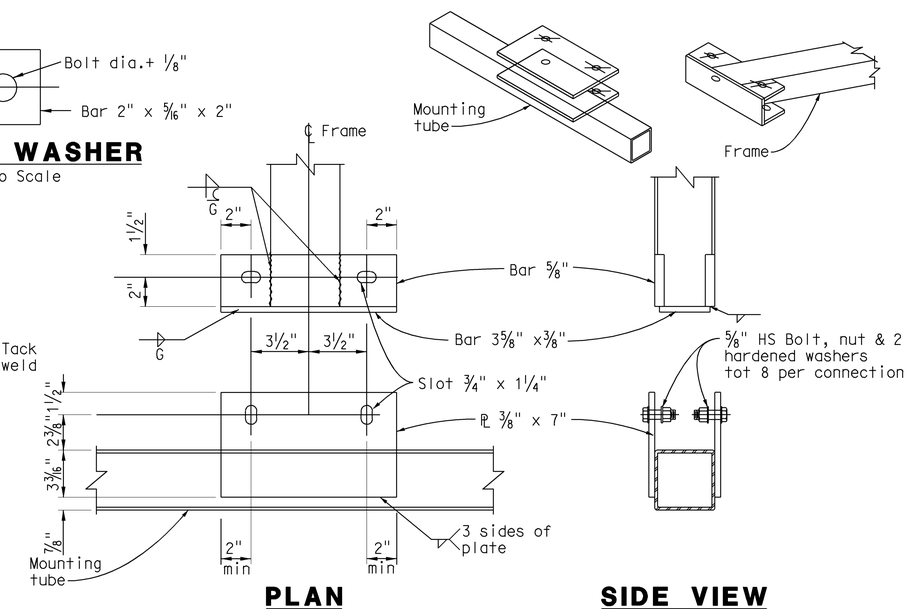

PLAN

SIDE VIEW

FRAME - MOUNTING TUBE CONNECTION

Scale 1:5

NOTE:
THE CONTRACTOR SHALL VERIFY ALL CONTROLLING FIELD DIMENSIONS BEFORE ORDERING OR FABRICATING ANY MATERIAL.

DESIGN OVERSIGHT — Jon Hamaguchi
6-24-09
SIGN OFF DATE

	BY	CHECKED
DESIGN	Chris Cho	Tihomir Kirilov
DETAILS	Chris Cho	Tihomir Kirilov
QUANTITIES	Chris Cho	Hernan Montoya

PREPARED FOR THE STATE OF CALIFORNIA DEPARTMENT OF TRANSPORTATION

Romeo M. Firme
PROJECT ENGINEER

BRIDGE NO. 55-0456
POST MILE 17.3

CHAPMAN AVENUE UC (WIDEN)

BRIDGE MOUNTED SIGN DETAILS NO. 2

DESIGN DETAIL SHEET (ENGLISH) (REV. 2/25/05)

ORIGINAL SCALE IN INCHES FOR REDUCED PLANS 0 1 2 3

CU 12
EA 0F0311

DISREGARD PRINTS BEARING EARLIER REVISION DATES — REVISION DATES (PRELIMINARY STAGE ONLY) 2/13/09 6/17/09

SHEET 15 OF 23

FILE => 55-0456-u-sign02.dgn

USERNAME => trlenard DATE PLOTTED => 16-DEC-2009 TIME PLOTTED => 09:58

DIST.	COUNTY	ROUTE	POST MILES TOTAL PROJECT	SHEET NO.	TOTAL SHEETS
12	Ora	57	16.2/18.6	816	960

REGISTERED ENGINEER - CIVIL

12-14-09

PLANS APPROVAL DATE

REGISTERED PROFESSIONAL ENGINEER Romeo Firme No. C43929 Exp. 06/30/09 CIVIL STATE OF CALIFORNIA

The State of California or its officers or agents shall not be responsible for the accuracy or completeness of electronic copies of this plan sheet.

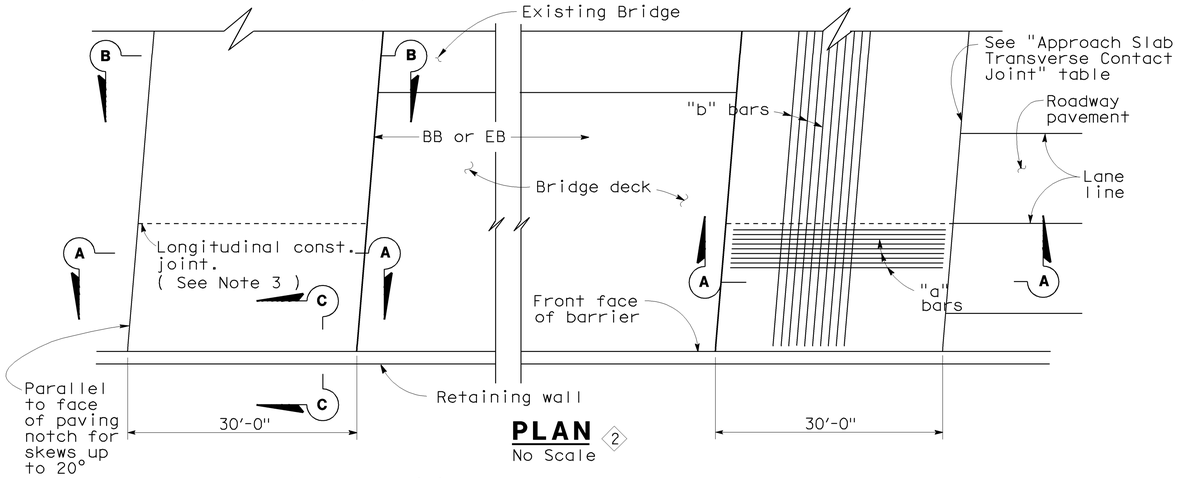

PLAN 2
No Scale

APPROACH SLAB TRANSVERSE CONTACT JOINT		
APPROACH SKEW	WITH AC ROADWAY PAVEMENT	WITH PCC ROADWAY PAVEMENT
< 20°	Parallel to face of paving notch	Parallel to face of paving notch

1

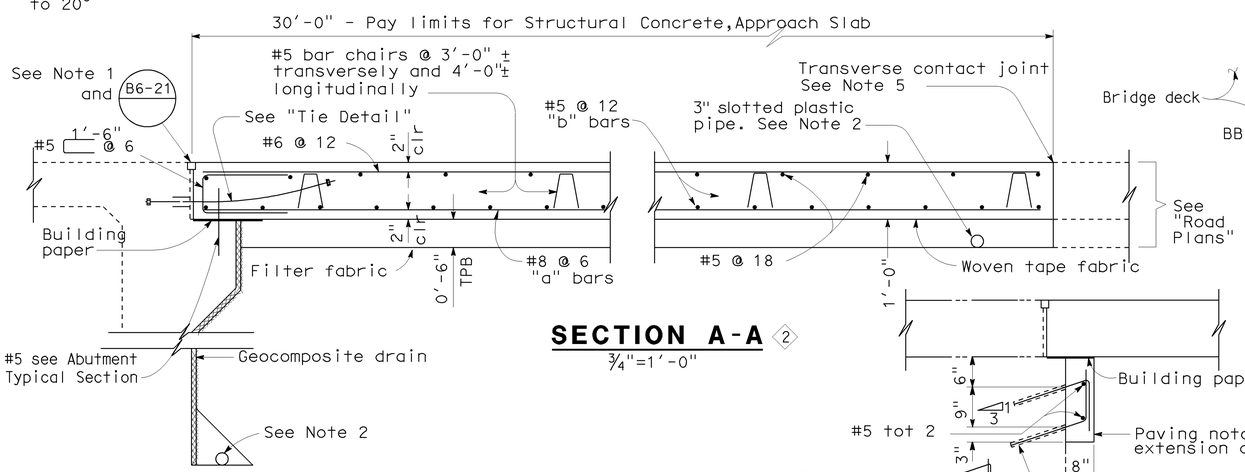

SECTION A-A 2
3/4"=1'-0"

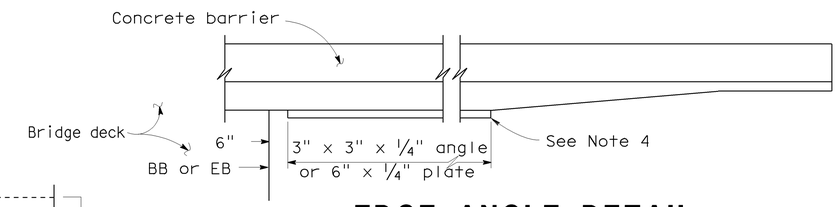

EDGE ANGLE DETAIL
1/2"=1'-0"

1

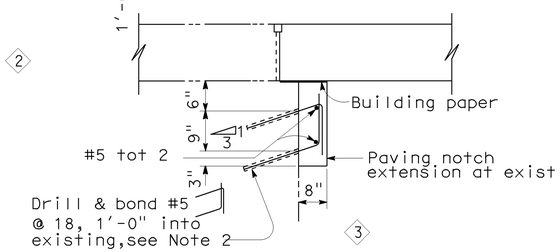

SECTION B-B 3
3/4" = 1'-0"

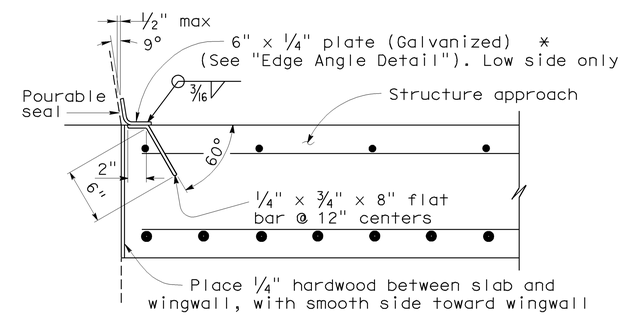

***(TO BE USED WITH TYPE 732 OR TYPE 736 CONCRETE BARRIER)**

DETAIL B
1 1/2"=1'-0"

1

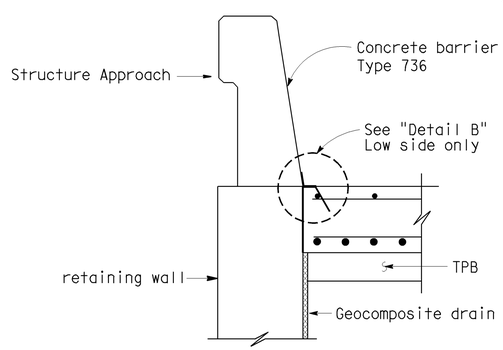

TYPE E-2

SECTION C-C
3/4"=1'-0"

(Type E-1 to be used, unless otherwise shown on plans)

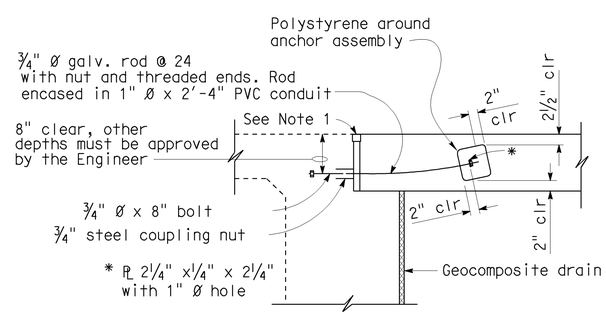

TIE DETAIL
3/4"=1'-0"

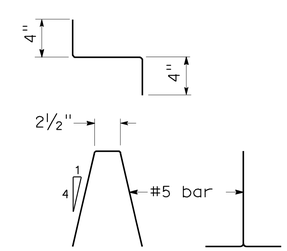

BAR CHAIR DETAIL
1 1/2"=1'-0"

NOTES:

1. For details not noted or shown, see Structure Plans.
2. For drainage details, see "Structure Approach Drainage Details" sheet.
3. Longitudinal construction joints, when permitted by the Engineer, shall be located on lane lines.
4. End angle or plate at beginning of barrier transition, end of wingwall or end of structure approach, as applicable.
5. For transverse contact joint with new PCC paving, refer to Standard Plan P10.
6. At the contractor's option, approach slab transverse reinforcement may be placed parallel to paving notch. Spacing of transverse reinforcement is measured along ℄ roadway.

Polystyrene to be removed.

STANDARD DRAWING

FILE NO. xs3-180e

APPROVED BY M. Ha — RESPONSIBLE TECHNICAL SPECIALIST
APPROVAL DATE 8-12-08

RELEASED BY O. Alcantara — RESPONSIBLE OFFICE CHIEF
RELEASE DATE 8-12-08

1 Deleted detail
2 Revised detail
3 Added detail

STATE OF CALIFORNIA
DEPARTMENT OF TRANSPORTATION

DIVISION OF ENGINEERING SERVICES

BRIDGE NO. 55-0456
POST MILE 17.3

CHAPMAN AVENUE UC (WIDEN)

STRUCTURE APPROACH TYPE N(30D)

DS OSD 2147A (ENGLISH STANDARD DRAWING "XS" BORDER REV. 01/11/08)

ORIGINAL SCALE IN INCHES FOR REDUCED PLANS 0 1 2 3

CU 12
EA 0F0311

DISREGARD PRINTS BEARING EARLIER REVISION DATES 6/17/09

REVISION DATES (PRELIMINARY STAGE ONLY)

SHEET 16 OF 23

USERNAME => trlenard

55-0456-v-sa30n.dgn

DATE PLOTTED => 16-DEC-2009 TIME PLOTTED => 09:58

DIST.	COUNTY	ROUTE	MILE POST TOTAL PROJECT	SHEET NO.	TOTAL SHEETS
12	Ora	57	16.2/18.6	817	960

REGISTERED ENGINEER - CIVIL

12-14-09

PLANS APPROVAL DATE

REGISTERED PROFESSIONAL ENGINEER Romeo Firme No. C43929 Exp. 06/30/09 CIVIL STATE OF CALIFORNIA

The State of California or its officers or agents shall not be responsible for the accuracy or completeness of electronic copies of this plan sheet.

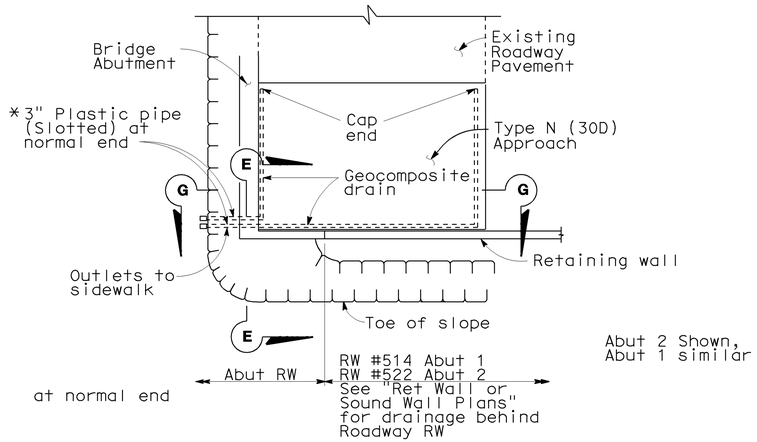

TYPICAL PLAN 2

1"=10'

*For pipe layout at staggered end,see "Detail B".

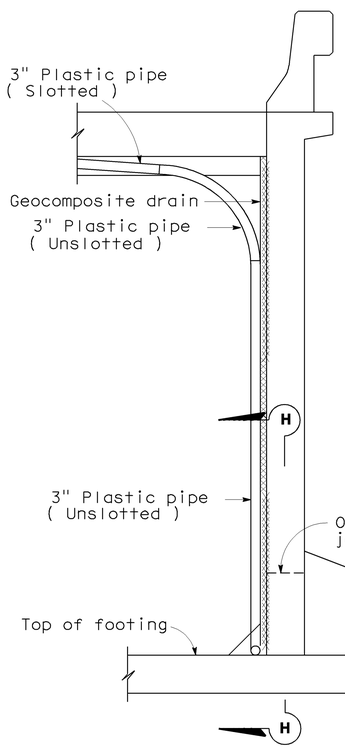

SECTION E-E 2

1/2"=1'-0"

NOTE: Bends and junctions in 3" plastic pipe are 30" radius min.

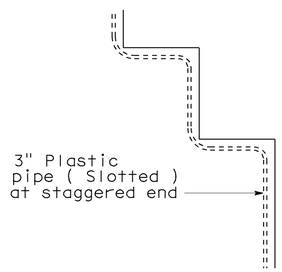

DETAIL B

No Scale

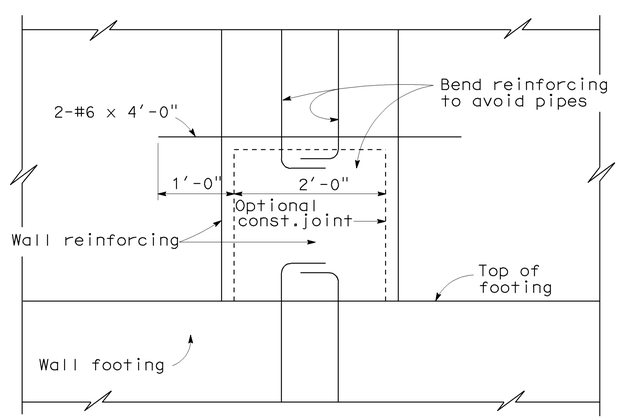

SECTION H-H

1"=1'-0"

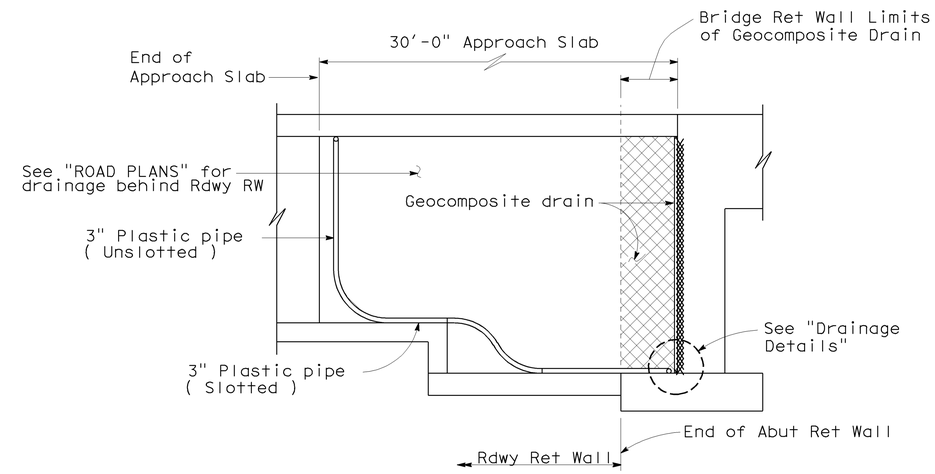

SECTION G-G 2

1/4"=1'-0"

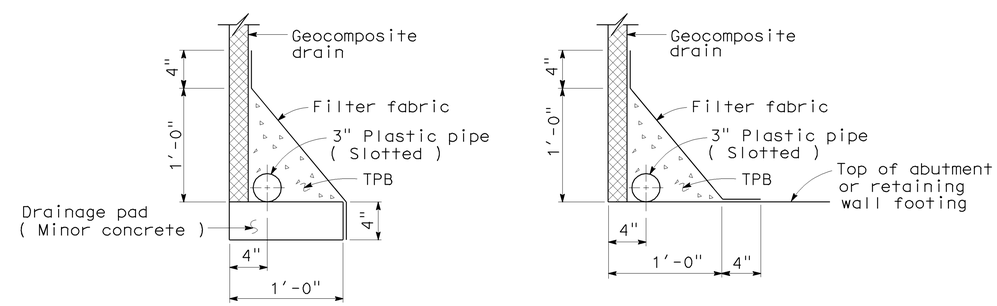

WITHOUT FOOTING

WITH FOOTING

DRAINAGE DETAILS

1 1/2"=1'-0"

1 Deleted Detail

2 Revised Detail

STANDARD DRAWING

RELEASE DATE 4/23/98	DESIGN	BY M.TRAFFALIS	CHECKED E.THORKILDSEN	RELEASED BY
FILE NO. xs3-110e	DETAILS	BY R.YEE	CHECKED E.THORKILDSEN	OFFICE CHIEF
	SUBMITTED	BY M.HA	DRAWING DATE 4/98	

STATE OF CALIFORNIA DEPARTMENT OF TRANSPORTATION

DIVISION OF ENGINEERING SERVICES

BRIDGE NO. 55-0456

MILE POST 17.3

CHAPMAN AVENUE UC (WIDEN)

STRUCTURE APPROACH DRAINAGE DETAILS

DS OSD 2147A (ENGLISH) (REV. X/XX/XX)

ORIGINAL SCALE IN INCHES FOR REDUCED PLANS 0 1 2 3

CU 12
EA 0F0311

DISREGARD PRINTS BEARING EARLIER REVISION DATES 6/17/09

REVISION DATES (PRELIMINARY STAGE ONLY)

SHEET 17 OF 23

USERNAME => trlenard

55-0456-v-sadd.dgn

DATE PLOTTED => 16-DEC-2009 TIME PLOTTED => 09:59

RELEASED 10-30-97

DIST.	COUNTY	ROUTE	POST MILES TOTAL PROJECT	SHEET NO.	TOTAL SHEETS
12	Ora	57	16.2/18.6	818	960

REGISTERED ENGINEER - CIVIL

REGISTERED PROFESSIONAL ENGINEER
Romeo Firme
No. C43929
Exp. 06/30/09
CIVIL
STATE OF CALIFORNIA

12-14-09
PLANS APPROVAL DATE

The State of California or its officers or agents shall not be responsible for the accuracy or completeness of electronic copies of this plan sheet.

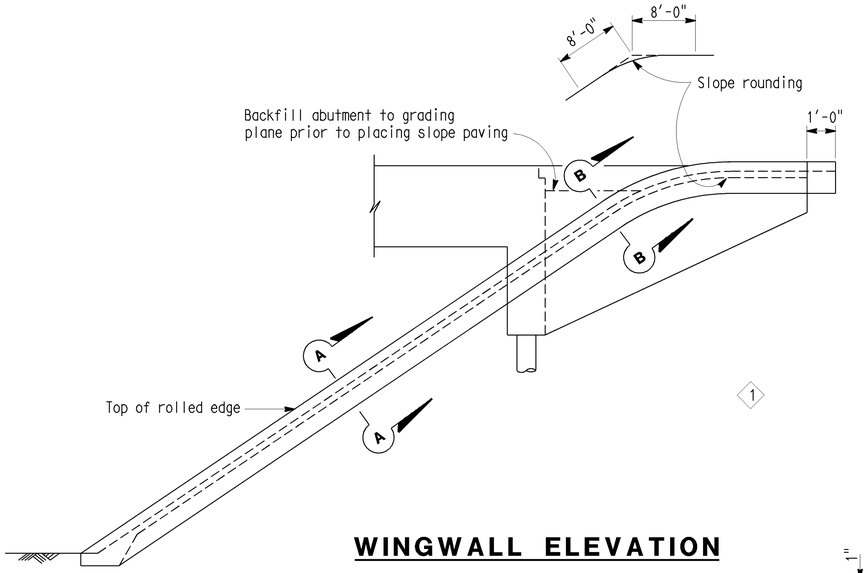

WINGWALL ELEVATION

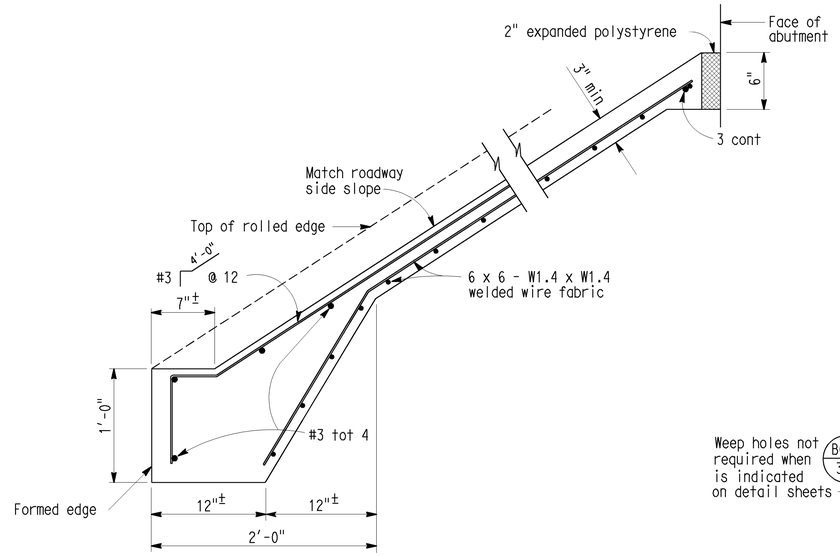

TYPICAL SECTION - CONCRETE PAVING

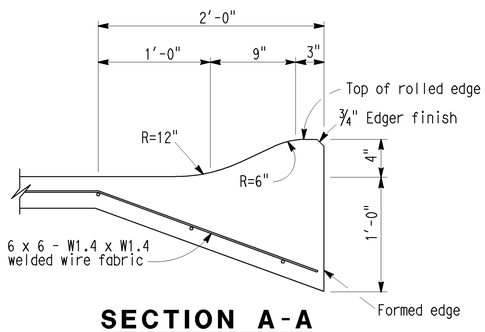

SECTION A-A

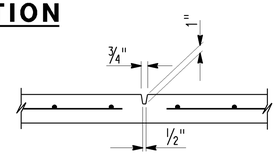

PREFORMED GROOVE

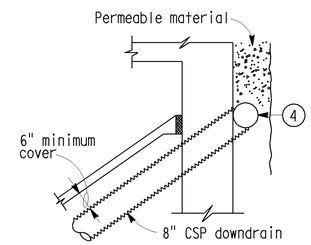

TYPICAL - DRAIN CONNECTION

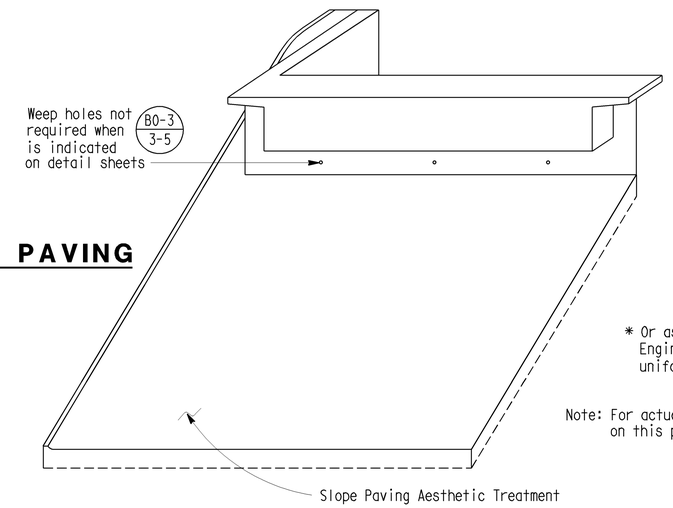

* Or as directed by the Engineer to provide uniform spacing

Note: For actual limits of slope paving on this project, see sketch below.

PICTORIAL VIEW OF TYPICAL INSTALLATION

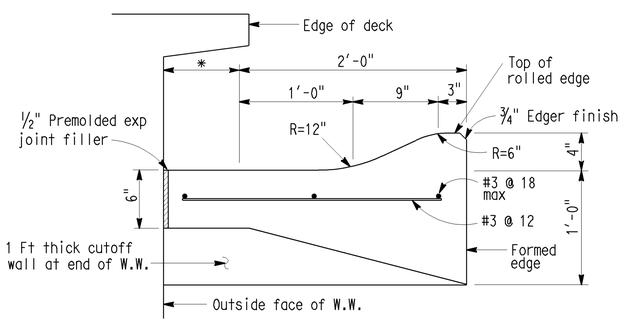

SECTION B-B

* This dimension becomes zero when edge of deck is at outside face of W.W.

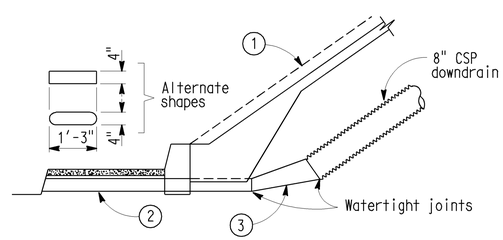

TYPICAL - WITH SIDEWALK

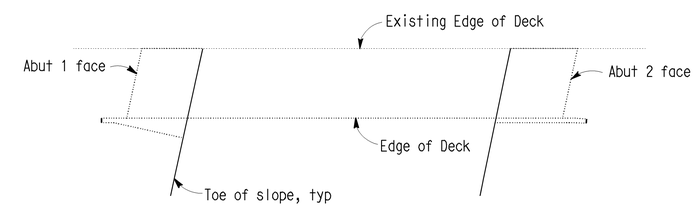

LIMITS OF SLOPE PAVING & DRAINAGE LAYOUT

DRAINAGE DETAILS

Note: Drainage details are only applicable when is indicated on detail sheets. (B0-3 / 3-5)

1. Top of rolled edge
2. Conduit: 0.064" galv corrugated steel or 0.109" smooth galv steel
3. Taper: { 0.064" galv corrugated steel or 0.109" smooth galv steel
4. 8" perforated steel pipe (0.064" thick) underdrain behind abutment. Connect to downdrain as shown on limits of Slope Paving & Drainage layout.

1 Deleted Detail

STANDARD DRAWING			
FILE NO. XS 22-11	DESIGN BY	CHECKED	APPROVAL RECOMMENDED BY
DESIGN DATE 3/89	DETAILS BY R. YEE	CHECKED	DESIGN SUPERVISOR
	SUBMITTED BY C.W. PURKISS		

STATE OF CALIFORNIA
DEPARTMENT OF TRANSPORTATION

DIVISION OF STRUCTURES
STRUCTURE DESIGN

BRIDGE NO. 55-0456
POST MILE 17.3

CHAPMAN AVENUE UC (WIDEN)

SLOPE PAVING - FULL SLOPE

DS OSD 2147A (CADD 7/97)

ORIGINAL SCALE IN INCHES FOR REDUCED PLANS 0 1 2 3

CU 12
EA 0F0311

DISREGARD PRINTS BEARING EARLIER REVISION DATES

REVISION DATES (PRELIMINARY STAGE ONLY) 6/17/09

SHEET 18 OF 23

XS2211.DGN

DIST	COUNTY	ROUTE	POST MILES TOTAL PROJECT	SHEET No	TOTAL SHEETS
12	Ora	57	16.2/18.6	819	960

REGISTERED CIVIL ENGINEER — DATE 6-17-09

12-14-09
PLANS APPROVAL DATE

REGISTERED PROFESSIONAL ENGINEER — Romeo Firme — No. C43929 — Exp. 08/30/09 — CIVIL — STATE OF CALIFORNIA

The State of California or its officers or agents shall not be responsible for the accuracy or completeness of electronic copies of this plan sheet.

OCTA
550 S MAIN STREET
ORANGE, CA 92868

RBF CONSULTING
14725 ALTON PKWY
IRVINE, CA 92618

NOTES:

1. Separate neighboring paving segments with premolded expansion joint filler.
2. Grid shown is reference for pattern layout only and not to be rendered on finished paving.
3. Flower and Stem segments shall be colored concrete.

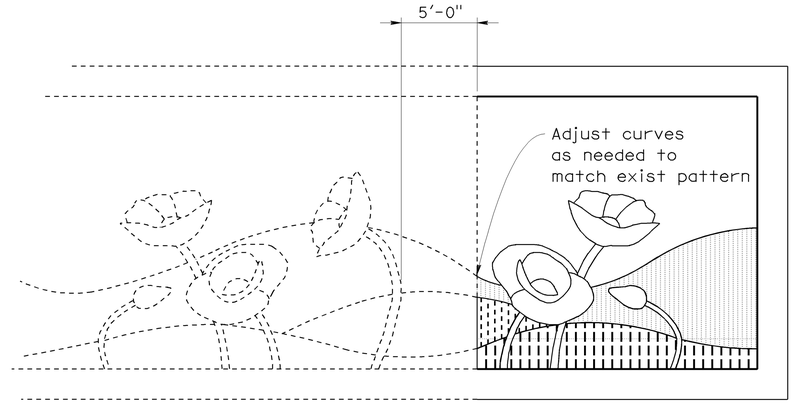

Sawcut and remove exist rolled edge gutter

PATTERN ADJOINING EXIST SLOPE PAVING

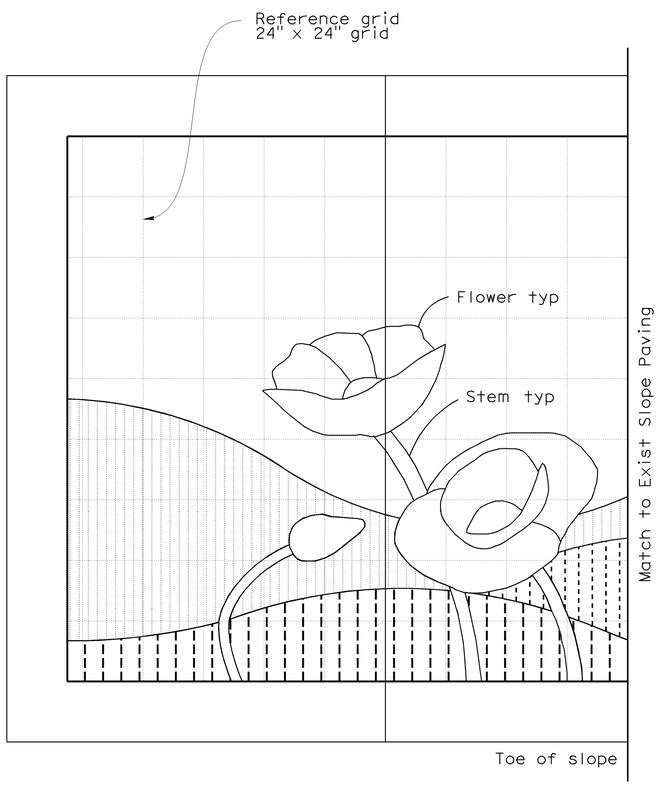

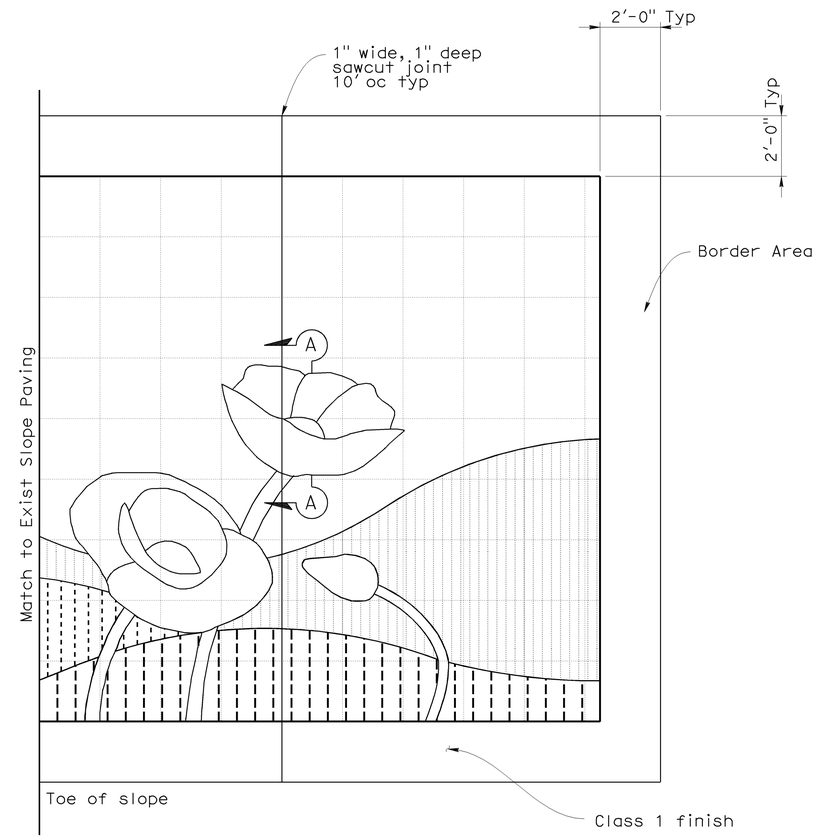

SLOPE PAVING ARCHITECTURAL TREATMENT

No Scale

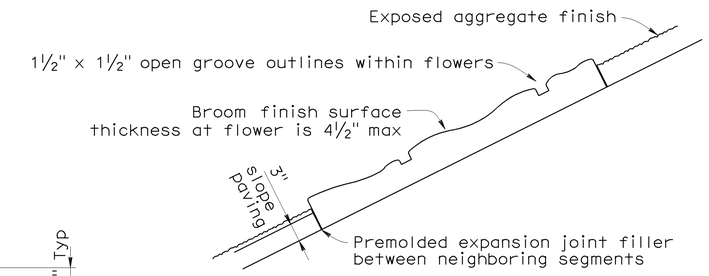

SECTION A-A

No Scale

LEGEND TO TEXTURES

- Exposed aggregate finish (except at flowers, stems and border area)
- Exposed aggregate finish with small grooves ⅜" × ⅜" × 1" oc vertical to slope
- Exposed aggregate finish with medium grooves ½" × ½" × 1½" oc vertical to slope
- Exposed aggregate finish with large grooves 1" × ¾" × 3" oc vertical to slope

NOTE:
THE CONTRACTOR SHALL VERIFY ALL CONTROLLING FIELD DIMENSIONS BEFORE ORDERING OR FABRICATING ANY MATERIAL.

DESIGN OVERSIGHT — Jon Hamaguchi
6-24-09
SIGN OFF DATE

	BY	CHECKED
DESIGN	Chris Cho	T. A. Kirilov
DETAILS	J. Saldana	T. A. Kirilov
QUANTITIES	Chris Cho	H. Montoya

PREPARED FOR THE STATE OF CALIFORNIA DEPARTMENT OF TRANSPORTATION

Romeo M. Firme
PROJECT ENGINEER

BRIDGE NO. 55-0456
POST MILE 17.3

CHAPMAN AVENUE UC (WIDEN)
SLOPE PAVING AESTHETIC TREATMENT

DESIGN DETAIL SHEET (ENGLISH) (REV. 2/25/05)

ORIGINAL SCALE IN INCHES FOR REDUCED PLANS 0 1 2 3

CU 12
EA 0F0311

DISREGARD PRINTS BEARING EARLIER REVISION DATES 6/17/09

REVISION DATES (PRELIMINARY STAGE ONLY)

SHEET 19 OF 23

FILE => 55-0456-v-spfsat.dgn

USERNAME => trlenard DATE PLOTTED => 16-DEC-2009 TIME PLOTTED => 09:59

DIST	COUNTY	ROUTE	POST MILES TOTAL PROJECT	SHEET No	TOTAL SHEETS
12	Ora	57	16.2/18.6	820	960

Lino Cheang 6-17-09
REGISTERED ENGINEER DATE

12-14-09
PLANS APPROVAL DATE

REGISTERED PROFESSIONAL ENGINEER L. CHEANG NO. GE 2345 EXP. 9-30-09 GEOTECHNICAL STATE OF CALIFORNIA

The State of California or its officers or agents shall not be responsible for the accuracy or completeness of electronic copies of this plan sheet.

ORANGE COUNTY TRANSPORTATION AUTHORITY
550 S. MAIN STREET
ORANGE, CA 92863-1584

EARTH MECHANICS, INC.
17660 NEWHOPE STREET, SUITE E
FOUNTAIN VALLEY, CA 92708

BENCHMARKS:

Vertical Datum NAVD 88

Designation: 1L-54-82 Elev = 153.171
Described by OCS 2002 - Found 3¾" OCS Aluminum Benchmark Disk Stamped "1L-54-82", set in the Top of a 6 in. by 6 in. Concrete Post. Monument is located along the Westerly Levee of the Santa Ana River, 0.25 Miles Northerly along Levee from the Centerline of Orangewood Avenue, 200 ft. Northeasterly of the Easterly Leg of the Anaheim Angels 200 ft. tall sign, 69 ft. Westerly of the Centerline of the Bike Trail and 1.5 ft. Westerly of a Steel OCS Witness Post. Monument is set 0.3 below the Ground.

Designation: 2G-25-70 Elev = 275.872
Described by OCS 2003 - Found 3¾" OCS Aluminum Benchmark Disk Stamped "2G-25-70", set in the Southeasterly Corner of a 4 ft by 6 ft Concrete Catch Basin. Monument is Located in the Northwesterly Corner of the Intersection of Yorba Linda Boulevard and Deerpark Drive, 75 ft Westerly of the Centerline of Deerpark and 46 ft Northerly of the Centerline of Yorba Linda. Monument is set Level with the Sidewalk.

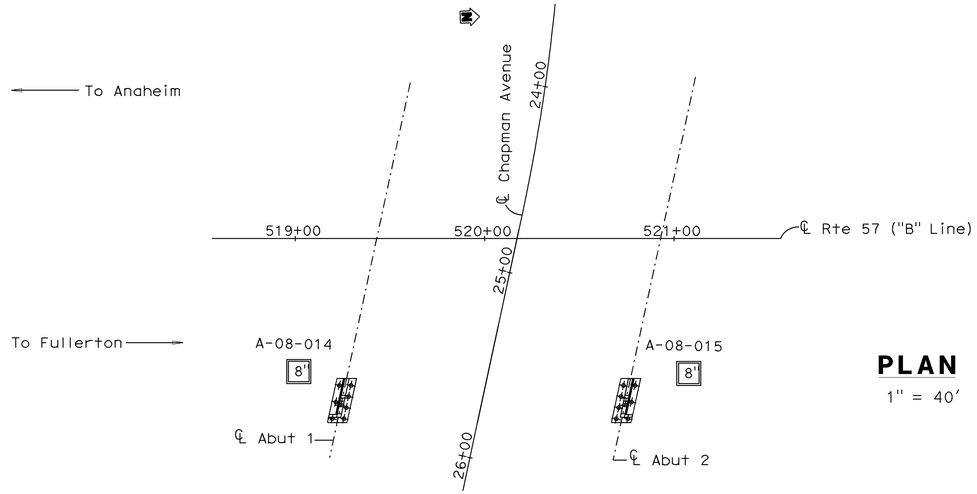

PLAN
1" = 40'

NOTES:

(1) This LOTB sheet was prepared in accordance with the Caltrans Soil and Rock Logging, Classification and Presentation Manual (June 2007)

(2) 2.4" samples were taken using a California Modified Sampler.

(3) An automatic trip hammer system consisting of a hammer weight of 140 lbs falling a distance of 30" was used to advance the drive sampler.

(4) Conversion factor from 2.4" Modified California Ring Sampler blowcounts to Standard Penetration Test (SPT) blowcounts is 0.5.

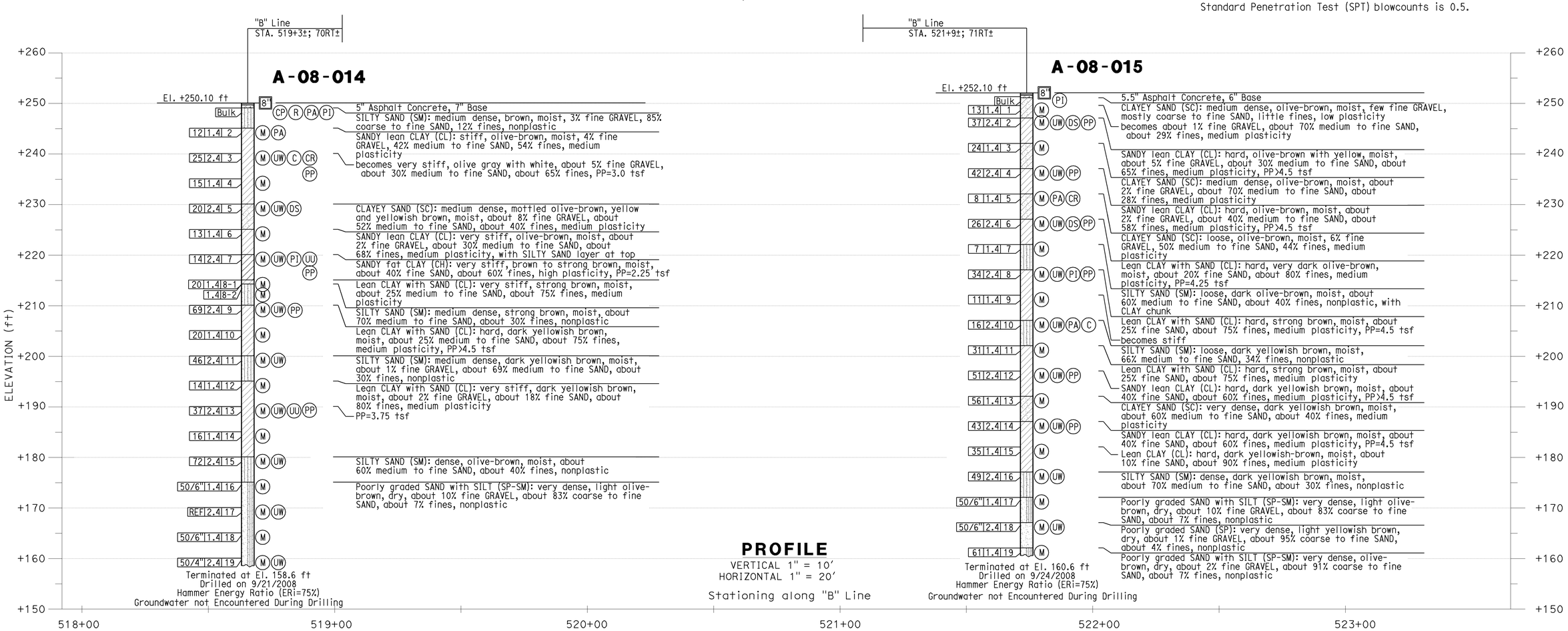

PROFILE
VERTICAL 1" = 10'
HORIZONTAL 1" = 20'
Stationing along "B" Line

Jon Hamaguchi
DESIGN OVERSIGHT Jon Hamaguchi
6-24-09
SIGN OFF DATE

DRAWN BY: J.Fang
CHECKED BY: L.Cheang

FIELD INVESTIGATION BY:
R.Jie

PREPARED FOR THE
STATE OF CALIFORNIA
DEPARTMENT OF TRANSPORTATION

L.Cheang
PROJECT ENGINEER

BRIDGE NO. 55-0456
POST MILES 17.3

CHAPMAN AVENUE UC (WIDEN)
LOG OF TEST BORINGS NO. 1

DESIGN GENERAL PLAN SHEET (ENGLISH) (REV. 2/25/05)

ORIGINAL SCALE IN INCHES FOR REDUCED PLANS 0 1 2 3

CU 12
EA 0F0311

DISREGARD PRINTS BEARING EARLIER REVISION DATES
REVISION DATES (PRELIMINARY STAGE ONLY) 4/30/09

SHEET 20 OF 23

FILE => 55-0456-Z-LOTB01.dgn

USERNAME => rfriesenhard DATE PLOTTED => 16-DEC-2009 TIME PLOTTED => 09:59

DIST	COUNTY	ROUTE	POST MILES TOTAL PROJECT	SHEET No	TOTAL SHEETS
12	Ora	57	16.2/18.6	821	960

Lino Cheang 6-17-09
REGISTERED ENGINEER DATE

12-14-09
PLANS APPROVAL DATE

REGISTERED PROFESSIONAL ENGINEER L. CHEANG NO. GE 2345 EXP. 9-30-09 GEOTECHNICAL STATE OF CALIFORNIA

The State of California or its officers or agents shall not be responsible for the accuracy or completeness of electronic copies of this plan sheet.

ORANGE COUNTY TRANSPORTATION AUTHORITY
550 S. MAIN STREET
ORANGE, CA 92863-1584

EARTH MECHANICS, INC.
17660 NEWHOPE STREET, SUITE E
FOUNTAIN VALLEY, CA 92708

REFERENCE: CALTRANS SOIL & ROCK LOGGING, CLASSIFICATION, AND PRESENTATION MANUAL (JUNE 2007)

CEMENTATION

Description	Criteria
Weak	Crumbles or breaks with handling or little finger pressure.
Moderate	Crumbles or breaks with considerable finger pressure.
Strong	Will not crumble or break with finger pressure.

CONSISTENCY OF COHESIVE SOILS

Description	Unconfined Compressive Strength (tsf)	Pocket Penetrometer Measurement (tsf)	Torvane Measurement (tsf)	Field Approximation
Very Soft	< 0.25	< 0.25	< 0.12	Easily penetrated several inches by fist
Soft	0.25 to 0.50	0.25 to 0.50	0.12 to 0.25	Easily penetrated several inches by thumb
Medium Stiff	0.50 to 1.0	0.50 to 1.0	0.25 to 0.50	Penetrated several inches by thumb with moderate effort
Stiff	1 to 2	1 to 2	0.50 to 1.0	Readily indented by thumb but penetrated only with great effort
Very Stiff	2 to 4	2 to 4	1.0 to 2.0	Readily indented by thumbnail
Hard	> 4.0	> 4.0	> 2.0	Indented by thumbnail with difficulty

BOREHOLE IDENTIFICATION

Symbol	Hole Type	Description
Size	A	Auger Boring
Size	R P	Rotary drilled boring Rotary percussion boring (air)
Size	R	Rotary drilled diamond core
Size	HD HA	Hand driven (1-inch soil tube) Hand Auger
●	D	Dynamic Cone Penetration Boring
▲	CPT	Cone Penetration Test (ASTM D 5778-95)
⬚	O	Other

Note: Size in inches.

PLASTICITY OF FINE-GRAINED SOILS

Description	Criteria
Nonplastic	A 1/8-inch thread cannot be rolled at any water content.
Low	The thread can barely be rolled and the lump cannot be formed when drier than the plastic limit.
Medium	The thread is easy to roll and not much time is required to reach the plastic limit. The thread cannot be rerolled after reaching the plastic limit. The lump crumbles when drier than the plastic limit.
High	It takes considerable time rolling and kneading to reach the plastic limit. The thread can be rerolled several times after reaching the plastic limit. The lump can be formed without crumbling when drier than the plastic limit.

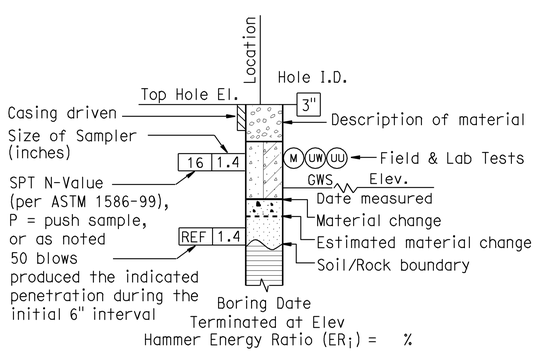

ROTARY BORING

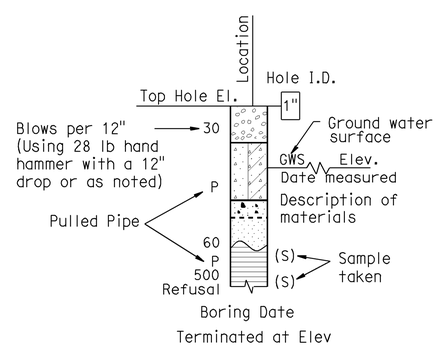

HAND BORING

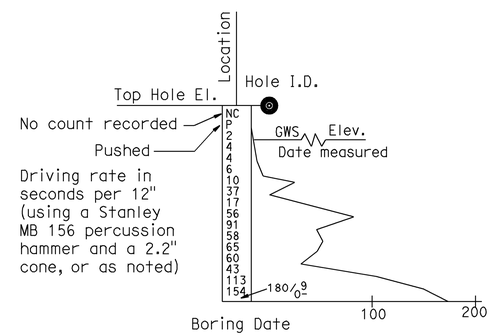

DYNAMIC CONE PENETRATION BORING

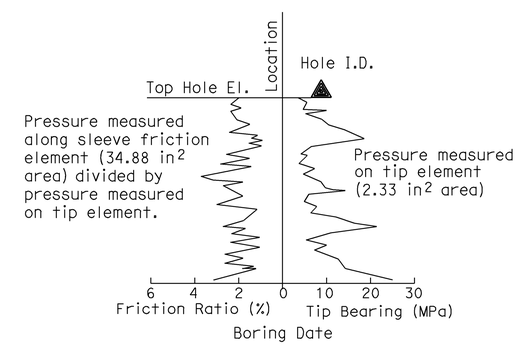

CONE PENETRATION TEST (CPT) SOUNDING

Jon Hamaguchi
DESIGN OVERSIGHT
6-24-09
SIGN OFF DATE

DRAWN BY: J.Fang
CHECKED BY: L.Cheang

FIELD INVESTIGATION BY:
R.Jie

PREPARED FOR THE STATE OF CALIFORNIA DEPARTMENT OF TRANSPORTATION

L.Cheang
PROJECT ENGINEER

BRIDGE NO. 55-0456
POST MILES 17.3

CHAPMAN AVENUE UC (WIDEN)
LOG OF TEST BORINGS NO. 2

DESIGN GENERAL PLAN SHEET (ENGLISH) (REV. 2/25/05)

ORIGINAL SCALE IN INCHES FOR REDUCED PLANS 0 1 2 3

CU 12
EA 0F0311

DISREGARD PRINTS BEARING EARLIER REVISION DATES

REVISION DATES (PRELIMINARY STAGE ONLY)

SHEET 21 OF 23

FILE => 55-0456-Z-LOTB02.dgn

USERNAME => rtrienard DATE PLOTTED => 16-DEC-2009 TIME PLOTTED => 10:34

REFERENCE: CALTRANS SOIL & ROCK LOGGING, CLASSIFICATION, AND PRESENTATION MANUAL (JUNE 2007)

GROUP SYMBOLS AND NAMES

Graphic/Symbol	Group Names
GW	Well-graded GRAVEL Well-graded GRAVEL with SAND
GP	Poorly graded GRAVEL Poorly graded GRAVEL with SAND
GW-GM	Well-graded GRAVEL with SILT Well-graded GRAVEL with SILT and SAND
GW-GC	Well-graded GRAVEL with CLAY (or SILTY CLAY) Well-graded GRAVEL with CLAY and SAND (or SILTY CLAY and SAND)
GP-GM	Poorly graded GRAVEL with SILT Poorly graded GRAVEL with SILT and SAND
GP-GC	Poorly graded GRAVEL with CLAY (or SILTY CLAY) Poorly graded GRAVEL with CLAY and SAND (or SILTY CLAY and SAND)
GM	SILTY GRAVEL SILTY GRAVEL with SAND
GC	CLAYEY GRAVEL CLAYEY GRAVEL with SAND
GC-GM	SILTY, CLAYEY GRAVEL SILTY, CLAYEY GRAVEL with SAND
SW	Well-graded SAND Well-graded SAND with GRAVEL
SP	Poorly graded SAND Poorly graded SAND with GRAVEL
SW-SM	Well-graded SAND with SILT Well-graded SAND with SILT and GRAVEL
SW-SC	Well-graded SAND with CLAY (or SILTY CLAY) Well-graded SAND with CLAY and GRAVEL (or SILTY CLAY and GRAVEL)
SP-SM	Poorly graded SAND with SILT Poorly graded SAND with SILT and GRAVEL
SP-SC	Poorly graded SAND with CLAY (or SILTY CLAY) Poorly graded SAND with CLAY and GRAVEL (or SILTY CLAY and GRAVEL)
SM	SILTY SAND SILTY SAND with GRAVEL
SC	CLAYEY SAND CLAYEY SAND with GRAVEL
SC-SM	SILTY, CLAYEY SAND SILTY, CLAYEY SAND with GRAVEL
PT	PEAT
	COBBLES COBBLES and BOULDERS BOULDERS

Graphic/Symbol	Group Names
CL	Lean CLAY Lean CLAY with SAND Lean CLAY with GRAVEL SANDY lean CLAY SANDY lean CLAY with GRAVEL GRAVELLY lean CLAY GRAVELLY lean CLAY with SAND
CL-ML	SILTY CLAY SILTY CLAY with SAND SILTY CLAY with GRAVEL SANDY SILTY CLAY SANDY SILTY CLAY with GRAVEL GRAVELLY SILTY CLAY GRAVELLY SILTY CLAY with SAND
ML	SILT SILT with SAND SILT with GRAVEL SANDY SILT SANDY SILT with GRAVEL GRAVELLY SILT GRAVELLY SILT with SAND
OL	ORGANIC lean CLAY ORGANIC lean CLAY with SAND ORGANIC lean CLAY with GRAVEL SANDY ORGANIC lean CLAY SANDY ORGANIC lean CLAY with GRAVEL GRAVELLY ORGANIC lean CLAY GRAVELLY ORGANIC lean CLAY with SAND
OL	ORGANIC SILT ORGANIC SILT with SAND ORGANIC SILT with GRAVEL SANDY ORGANIC SILT SANDY ORGANIC SILT with GRAVEL GRAVELLY ORGANIC SILT GRAVELLY ORGANIC SILT with SAND
CH	Fat CLAY Fat CLAY with SAND Fat CLAY with GRAVEL SANDY fat CLAY SANDY fat CLAY with GRAVEL GRAVELLY fat CLAY GRAVELLY fat CLAY with SAND
MH	Elastic SILT Elastic SILT with SAND Elastic SILT with GRAVEL SANDY elastic SILT SANDY elastic SILT with GRAVEL GRAVELLY elastic SILT GRAVELLY elastic SILT with SAND
OH	ORGANIC fat CLAY ORGANIC fat CLAY with SAND ORGANIC fat CLAY with GRAVEL SANDY ORGANIC fat CLAY SANDY ORGANIC fat CLAY with GRAVEL GRAVELLY ORGANIC fat CLAY GRAVELLY ORGANIC fat CLAY with SAND
OH	ORGANIC elastic SILT ORGANIC elastic SILT with SAND ORGANIC elastic SILT with GRAVEL SANDY ORGANIC elastic SILT SANDY ORGANIC elastic SILT with GRAVEL GRAVELLY ORGANIC elastic SILT GRAVELLY ORGANIC elastic SILT with SAND
OL/OH	ORGANIC SOIL ORGANIC SOIL with SAND ORGANIC SOIL with GRAVEL SANDY ORGANIC SOIL SANDY ORGANIC SOIL with GRAVEL GRAVELLY ORGANIC SOIL GRAVELLY ORGANIC SOIL with SAND

FIELD AND LABORATORY TESTING

- (C) Consolidation (ASTM D 2435)
- (CL) Collapse Potential (ASTM D 5333)
- (CP) Compaction Curve (CTM 216)
- (CR) Corrosivity Testing (CTM 643, CTM 422, CTM 417)
- (CU) Consolidated Undrained Triaxial (ASTM D 4767)
- (DS) Direct Shear (ASTM D 3080)
- (EI) Expansion Index (ASTM D 4829)
- (M) Moisture Content (ASTM D 2216)
- (OC) Organic Content-% (ASTM D 2974)
- (P) Permeability (CTM 220)
- (PA) Particle Size Analysis (ASTM D 422)
- (PI) Plasticity Index (AASHTO T 90) Liquid Limit (AASHTO T 89)
- (PL) Point Load Index (ASTM D 5731)
- (PM) Pressure Meter
- (PP) Pocket Penetrometer
- (R) R-Value (CTM 301)
- (SE) Sand Equivalent (CTM 217)
- (SG) Specific Gravity (AASHTO T 100)
- (SL) Shrinkage Limit (ASTM D 427)
- (SW) Swell Potential (ASTM D 4546)
- (TV) Pocket Torvane
- (UC) Unconfined Compression-Soil (ASTM D 2166) Unconfined Compression-Rock (ASTM D 2938)
- (UU) Unconsolidated Undrained Triaxial (ASTM D 2850)
- (UW) Unit Weight (ASTM D 4767)
- (VS) Vane Shear (AASHTO T 223)

DIST	COUNTY	ROUTE	POST MILES TOTAL PROJECT	SHEET No	TOTAL SHEETS
12	Ora	57	16.2/18.6	822	960

Lino Cheang 6-17-09
REGISTERED ENGINEER DATE

12-14-09
PLANS APPROVAL DATE

REGISTERED PROFESSIONAL ENGINEER L. CHEANG NO. GE 2345 EXP. 9-30-09 GEOTECHNICAL STATE OF CALIFORNIA

The State of California or its officers or agents shall not be responsible for the accuracy or completeness of electronic copies of this plan sheet.

ORANGE COUNTY TRANSPORTATION AUTHORITY
550 S. MAIN STREET
ORANGE, CA 92863-1584

EARTH MECHANICS, INC.
17660 NEWHOPE STREET, SUITE E
FOUNTAIN VALLEY, CA 92708

APPARENT DENSITY OF COHESIONLESS SOILS

Description	SPT N_{60} (Blows / 12 inches)
Very loose	0 - 4
Loose	5 - 10
Medium Dense	11 - 30
Dense	31 - 50
Very Dense	> 50

MOISTURE

Description	Criteria
Dry	Absence of moisture, dusty, dry to the touch
Moist	Damp but no visible water
Wet	Visible free water, usually soil is below water table

PERCENT OR PROPORTION OF SOILS

Description	Criteria
Trace	Particles are present but estimated to be less than 5%
Few	5 to 10%
Little	15 to 25%
Some	30 to 45%
Mostly	50 to 100%

PARTICLE SIZE

Description		Size
Boulder		> 12"
Cobble		3" to 12"
Gravel	Coarse	3/4" to 3"
	Fine	No. 4 to 3/4"
Sand	Coarse	No. 10 to No. 4
	Medium	No. 40 to No. 10
	Fine	No. 200 to No. 40

Jon Hamaguchi
DESIGN OVERSIGHT Jon Hamaguchi
6-24-09
SIGN OFF DATE

DRAWN BY: J.Fang
CHECKED BY: L.Cheang

FIELD INVESTIGATION BY:
R.Jie

PREPARED FOR THE STATE OF CALIFORNIA DEPARTMENT OF TRANSPORTATION

L.Cheang
PROJECT ENGINEER

BRIDGE NO. 55-0456
POST MILES 17.3

CHAPMAN AVENUE UC (WIDEN)
LOG OF TEST BORINGS NO. 3

DESIGN GENERAL PLAN SHEET (ENGLISH) (REV. 2/25/05)

ORIGINAL SCALE IN INCHES FOR REDUCED PLANS 0 1 2 3

CU 12
EA 0F0311

DISREGARD PRINTS BEARING EARLIER REVISION DATES

REVISION DATES (PRELIMINARY STAGE ONLY)

SHEET 22 OF 23

FILE => 55-0456-Z-LOTB03.dgn

USERNAME => rfriehard DATE PLOTTED => 16-DEC-2009 TIME PLOTTED => 10:34

FED. ROAD DIV. NO.	STATE	F.A. PROJECT NO.	SHEET NO.	TOTAL SHEETS
7	CALIF.			

DIST.	COUNTY	ROUTE	SECTION	SHEET NO.	TOTAL SHEETS
07	Ora	57	15.6/21.8	185	197

DIST. ENGINEER — CHIEF ENGINEER — DIRECTOR

DATE APPROVED August 28, 1967

DIVISION OF ENGINEERING SERVICES - GEOTECHNICAL SERVICES

As-Built Log of Test Borings sheet is considered an informational document only. As such, the State of California registration seal with signature, license number and registration certificate expiration date confirm that this is a true and accurate copy of the original document. This drawing is available and presented only for the convenience of any bidder, contractor or other interested party.

DIST.	COUNTY	ROUTE	POST MILES -TOTAL PROJECT	Sheet No.	Total Sheets
12	Ora	57	16.2/18.6	823	960

Lino Cheang — 6-17-09
REGISTERED CIVIL ENGINEER — DATE

REGISTERED PROFESSIONAL ENGINEER — LINO C. CHEANG — NO. GE 2345 — EXP. 9/30/09 — GEOTECHNICAL — STATE OF CALIFORNIA

CHAPMAN AVENUE UC (WIDEN)

AS-BUILT LOG OF TEST BORINGS

NOTE: A COPY OF THIS LOG OF TEST BORINGS IS AVAILABLE AT OFFICE OF STRUCTURE MAINTENANCE AND INVESTIGATIONS, SACRAMENTO, CALIFORNIA

CU: 12 EA: 0F0311 — BRIDGE No. 55-0456 — Sheet 21 of 21

To accompany plans dated 12-14-09

AS BUILT PLANS
Contract No. 07-032124
Date Completed
Document No. 70000668

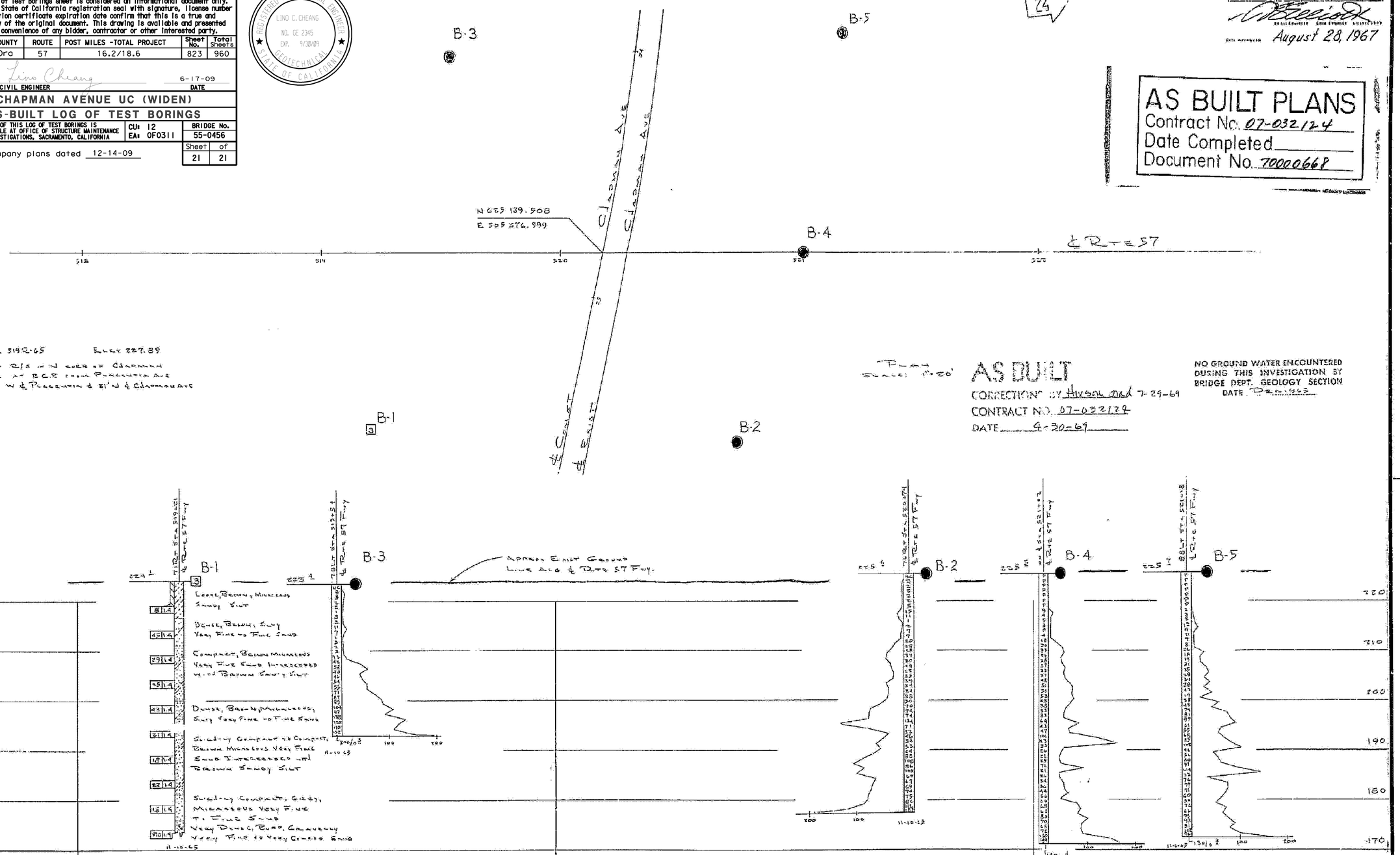

AS BUILT
CORRECTIONS BY Hudson Dated 7-29-69
CONTRACT NO. 07-032124
DATE 4-30-69

NO GROUND WATER ENCOUNTERED DURING THIS INVESTIGATION BY BRIDGE DEPT. GEOLOGY SECTION
DATE December 1965

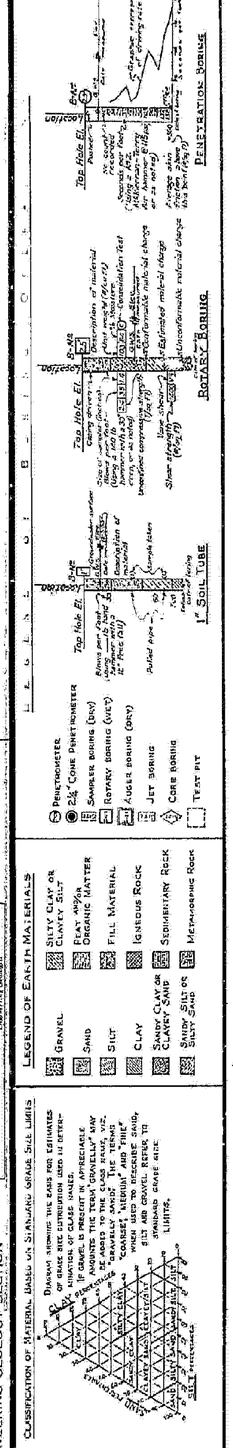

FIELD STUDY	By W. C. Cheung	1-14-66
DRAWN	By	3-14-66
CHECKED	By	3-14-66

Approval Recommended By [signature] Engineering Geologist

NOTE: Classification of earth material as shown on this sheet is based upon field inspection and is not to be construed to imply mechanical analysis.

BRIDGE DEPARTMENT
ENGINEERING GEOLOGY SECTION

STATE OF CALIFORNIA
DEPARTMENT OF PUBLIC WORKS
DIVISION OF HIGHWAYS

SHEET 12 OF 12

CHAPMAN AVENUE UNDERCROSSING

LOG OF TEST BORINGS

SCALE As Noted | BRIDGE 55-456 | FILE | DRAWING 55456-12

185

FILENAME => 55-0456-Z-LOTB04.tif

Clearance 07208
W.O. 032121

Disregard prints bearing earlier numbers

PREL. DRAWING No. PR-

DIST	COUNTY	ROUTE	POST MILES TOTAL PROJECT	SHEET No	TOTAL SHEETS
12	Ora	57	16.2/18.6	824	960

REGISTERED CIVIL ENGINEER — DATE 6/15/09

12-14-09
PLANS APPROVAL DATE

REGISTERED PROFESSIONAL ENGINEER — Miguel Carbuccia — No. C70531 — Exp. 12/31/10 — CIVIL — STATE OF CALIFORNIA

The State of California or its officers or agents shall not be responsible for the accuracy or completeness of electronic copies of this plan sheet.

OCTA
550 S Main Street
Orange, CA 92868

PBS&J
625 The City Drive South, Suite 200
Orange, CA 92868

NOTES

1. For Index to Plans, Standard Plans and General Notes, see "Index To Plans & General Notes" sheet.
2. For Pile Data Table, see "Foundation Plan" sheet.

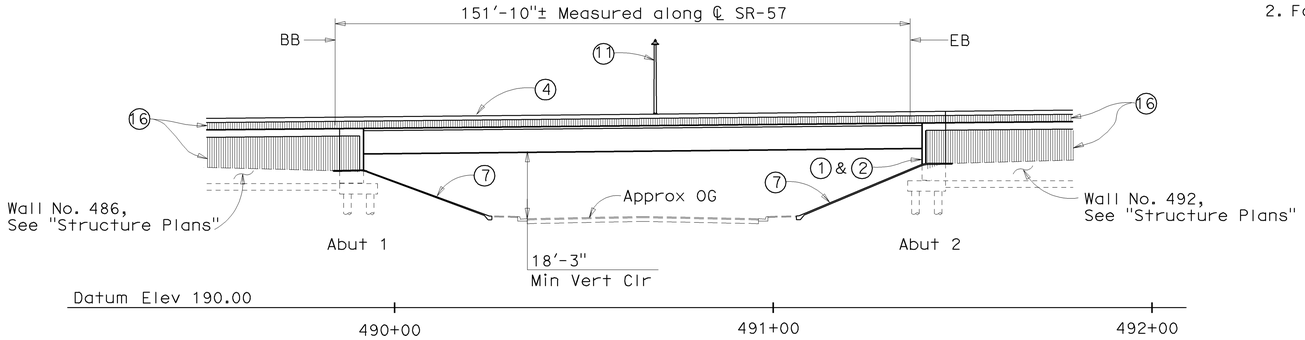

ELEVATION
1" = 20'

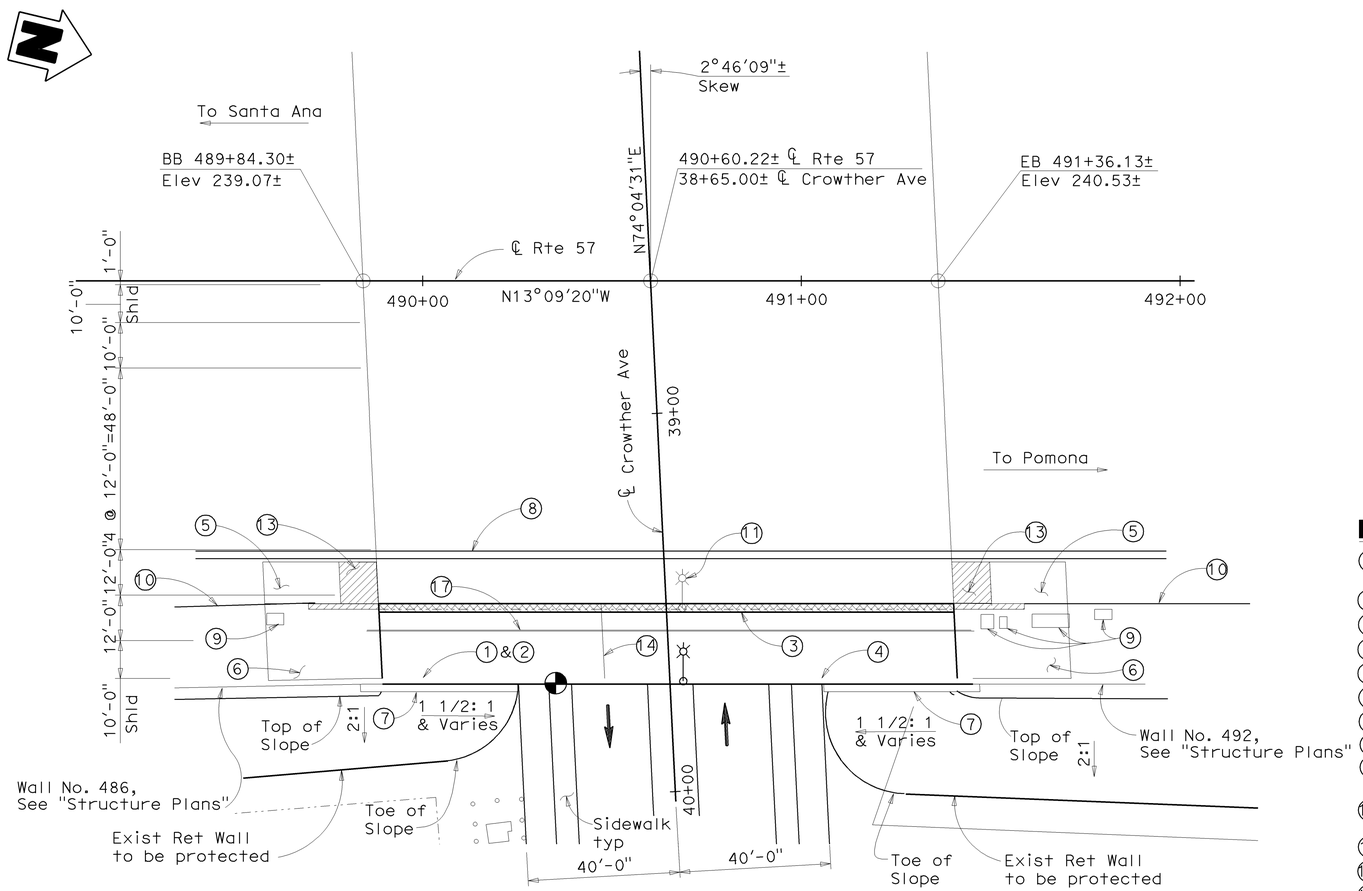

PLAN
1" = 20'

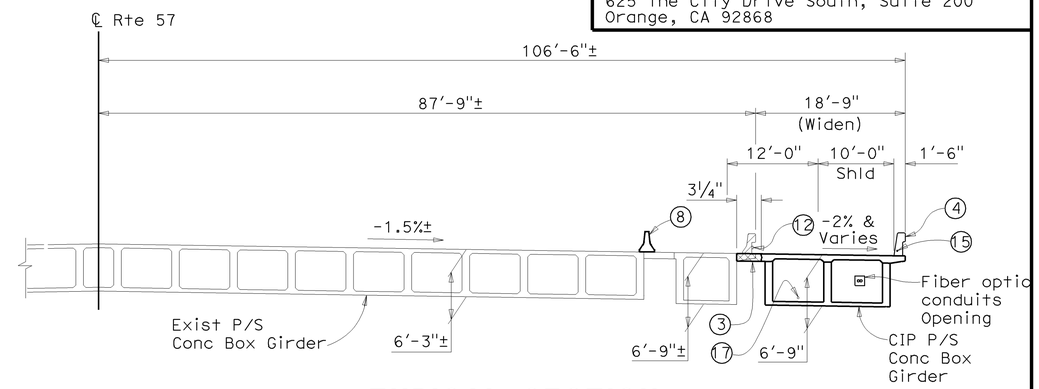

TYPICAL SECTION
1" = 10'

CROWTHER AVENUE UC — BRIDGE NO 55-0457

QUANTITIES

BRIDGE REMOVAL (PORTION), LOCATION C	LUMP	SUM
STRUCTURE EXCAVATION (BRIDGE)	206	CY
STRUCTURE BACKFILL (BRIDGE)	164	CY
AGGREGATE BASE (APPROACH SLAB)	3	CY
24" CAST-IN-DRILLED-HOLE CONCRETE PILING	597	LF
PRESTRESSING CAST-IN-PLACE CONCRETE	LUMP	SUM
STRUCTURAL CONCRETE, BRIDGE FOOTING	60	CY
STRUCTURAL CONCRETE, BRIDGE	363	CY
STRUCTURAL CONCRETE, APPROACH SLAB (TYPE N)	50	CY
STRUCTURAL CONCRETE, APPROACH SLAB (TYPE R)	27	CY
FRACTURED RIB TEXTURE	129	SQFT
DRILL AND BOND DOWEL	125	LF
JOINT SEAL (MR 1")	69	LF
BAR REINFORCING STEEL (BRIDGE)	115,080	LB
SLOPE PAVING (CONCRETE)	19	CY
MISCELLANEOUS METAL (BRIDGE)	400	LB
CONCRETE BARRIER (TYPE 736A MODIFIED)	8	LF
CONCRETE BARRIER (TYPE 736 MODIFIED)	153	LF

LEGEND

1. Paint "Bridge No. 55-0457" and year constructed
2. Paint "Crowther Ave UC"
3. Closure Pour
4. Conc Barrier Type 736 (Mod)
5. Structure Approach, type R(30D)
6. Structure Approach, Type N(30D)
7. Slope Paving
8. Temporary Railing Type K, See "Road Plans"
9. Ramp Meter Control Panel to be removed, see "Road Plans"
10. Metal Beam Guard Rail to be removed, see "Road Plans"
11. Exist Light Pole to be relocated
12. Exist Fiber Optic conduits to be relocated
13. Exist Approach slab to be removed
14. Pull box barrier, for location and conduit, see "Lighting Plans"
15. 2" Sprinkler control conduit, see "Irrigation Plans"
16. Fractured Rib Texture
17. 3" Water Supply Line, see "Irrigation Plans".

Indicates Point of Minimum Vertical Clearance
Indicates Closure Pour
Indicates Bridge Removal (Portion)
Indicates Existing Structure
Indicates New Structure

NOTES:
THE CONTRACTOR SHALL VERIFY ALL CONTROLLING FIELD DIMENSIONS BEFORE ORDERING OR FABRICATING ANY MATERIAL.

DESIGN OVERSIGHT — Jon Hamaguchi — 6-24-09 SIGN OFF DATE	DESIGN	BY M. Carbuccia	CHECKED K. Allam	LRFD DESIGN	LIVE LOADING: HL93 W/'LOW-BOY'AND PERMIT DESIGN VEHICLE
	DETAILS	BY I. Karkoutli	CHECKED K. Allam	LAYOUT	BY I. Karkoutli — CHECKED Alaedin Moubayed
	QUANTITIES	BY L. Khaleghi	CHECKED V. Nong	SPECIFICATIONS	BY S. Sheikh — PLANS AND SPECS COMPARED S. Sheikh

PREPARED FOR THE STATE OF CALIFORNIA DEPARTMENT OF TRANSPORTATION

Alaedin Moubayed — PROJECT ENGINEER

BRIDGE NO. 55-0457 — POST MILES 16.8

CROWTHER AVENUE UC (WIDEN)
GENERAL PLAN

DESIGN GENERAL PLAN SHEET (ENGLISH) (REV. 2/25/05)

ORIGINAL SCALE IN INCHES FOR REDUCED PLANS 0 1 2 3

CU 12
EA 0F0311

DISREGARD PRINTS BEARING EARLIER REVISION DATES

REVISION DATES (PRELIMINARY STAGE ONLY)

SHEET 1 OF 22

FILE => 55-0457-a-gp01.dgn

USERNAME => trlenard DATE PLOTTED => 16-DEC-2009 TIME PLOTTED => 10:34

DIST	COUNTY	ROUTE	POST MILES TOTAL PROJECT	SHEET No	TOTAL SHEETS
12	Ora	57	16.2/18.6	825	960

REGISTERED CIVIL ENGINEER — DATE 6/15/09

12-14-09
PLANS APPROVAL DATE

The State of California or its officers or agents shall not be responsible for the accuracy or completeness of electronic copies of this plan sheet.

REGISTERED PROFESSIONAL ENGINEER — Miguel Carbuccia No. C70531 Exp. 12/31/10 CIVIL — STATE OF CALIFORNIA

OCTA
550 S Main Street
Orange, CA 92868

PBS&J
625 The City Drive South, Suite 200
Orange, CA 92868

GENERAL NOTES
LOAD AND RESISTANCE FACTOR DESIGN

Design:

AASHTO LRFD Bridge Design Specification, 3rd edition with interims through 2006 and the Caltrans Amendments 3.06.01; except that abutment, earth retaining systems, details taken from Standard plans March 2006 and earlier versions, and standard Bridge details XS sheets, are designed using Bridge Design Specifications ('96 AASHTO w/Revisions by Caltrans).

Seismic Design:

Caltrans Seismic Design Criteria (SDC), Version 1.4 June 2006

Dead Load:

Includes 35 psf for future wearing surface

Live Load:

HL-93 and permit design load

Seismic Loading:

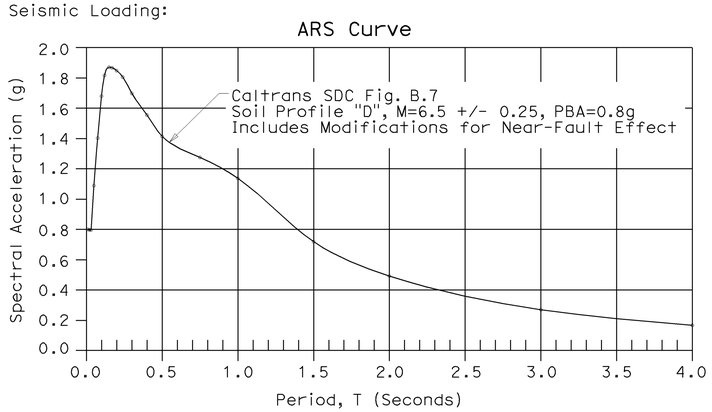

Reinforced Concrete:

REINFORCED CONCRETE (LRFD):

f_y = 6.0 ksi

f'_c = See "Concrete Strength and Type Limits"

INDEX TO PLANS

SHEET NO.	TITLE
1	General Plan
2	Index to Plans & General Notes
3	Bridge Removal Details
4	Deck Elevations
5	Foundation Plan
6	Abutment Layout
7	Abutment Details No. 1
8	Abutment Details No. 2
9	Typical Section
10	Girder Layout
11	Additional Soffit Reinforcement
12	Fiber Optic Conduits Details
13	Structure Approach Type R(30D)
14	Structure Approach Type N(30D)
15	Structure Approach Drainage Details
16	Concrete Barrier Type 736 (Mod)
17	Slope Paving
18	Log of Test Borings 1 of 3
19	Log of Test Borings 2 of 3
20	Log of Test Borings 3 of 3
21	As-Built Log of Test Borings No. 1
22	As-Built Log of Test Borings No. 2

STANDARD PLANS DATED MAY 2006

	A10A	Acronyms and Abbreviations (Sheet 1 of 2)
	A10B	Acronyms and Abbreviations (Sheet 2 of 2)
	A10C	Symbols (Sheet 1 of 2)
	A10D	Symbols (Sheet 2 of 2)
	A62C	Limits of Payment for Excavation and Backfill - Bridge
	B0-1	Bridge Details
	B0-3	Bridge Details
	B0-5	Bridge Details
	B0-13	Bridge Details
	B2-3	16" and 24" Cast-In-Drilled-Hole Concrete Pile
RSP	B6-21	Joint Seals (Maximum Movement Rating = 2")
	B7-1	Box Girder Details
	B7-10	Utility Opening Box Girder
	B8-5	Cast-in-Place Prestressed Girder Details
	B11-56	Concrete Barrier Type 736
	B14-3	Communication and Sprinkier Control Conduits (Conduit less Than Size 4")
	B14-4	Water Supply Line (Bridge) (Pipe Size Less Than 4")
	B14-5	Water Supply Line (Details) (Pipe Size Less Than 4")

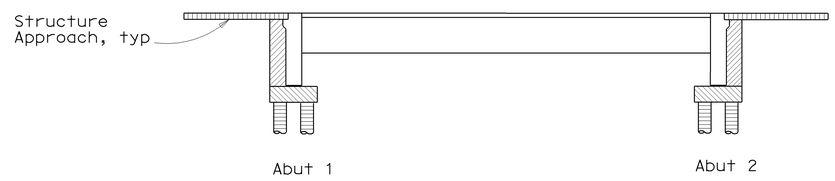

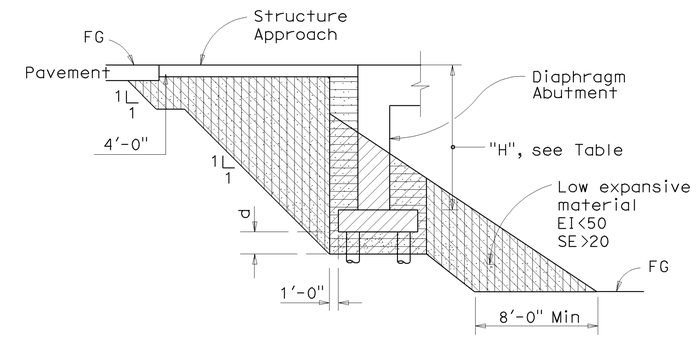

LEGEND

- Structural Concrete, Bridge (f'c =6.0 ksi @ 28 days)
- Structural Concrete, Bridge (f'c =4.0 ksi @ 28 days)
- Structural Concrete, Approach Slab
- (f'c =4.0 ksi @ 28 days)
- Structural Concrete, Bridge footing CIDH Concrete

CONCRETE STRENGTH AND TYPE LIMITS

No Scale

LEGEND

- Low Expansive Material EI<50 and SE>20
- Structure Excavation (Bridge)
- Structure Backfill (Bridge)
- Roadway Excavation (see "Road Plans")
- Roadway Embankment (See "Road Plans")

H	d
< 16'-0"	4'-0"
> 16'-0"	0'-0"

NOTE:

Transverse limit of Low Expansive Material shall be 1'-0" from edges of abutment footing to end of exist Abutment stem

LIMITS OF EXPANSIVE SOIL EXCLUSION ZONE IN BRIDGE EMBANKMENT

No Scale

PLAN SYMBOLS

- Standard Plan Sheet No.
- Detail No.
- Section Identification
- Girder Identification

NOTE:
THE CONTRACTOR SHALL VERIFY ALL CONTROLLING FIELD DIMENSIONS BEFORE ORDERING OR FABRICATING ANY MATERIAL.

DESIGN OVERSIGHT — Jon Hamaguchi
6-24-09
SIGN OFF DATE

	BY	CHECKED
DESIGN	M. Carbuccia	K. Allam
DETAILS	I. Karkoutli	K. Allam
QUANTITIES	L. Khaleghi	V. Nong

PREPARED FOR THE STATE OF CALIFORNIA DEPARTMENT OF TRANSPORTATION

Alaedin Moubayed
PROJECT ENGINEER

BRIDGE NO. 55-0457
POST MILE 16.8

CROWTHER AVENUE UC (WIDEN)
INDEX TO PLANS & GENERAL NOTES

DESIGN DETAIL SHEET (ENGLISH) (REV. 2/25/05)

ORIGINAL SCALE IN INCHES FOR REDUCED PLANS 0 1 2 3

CU 12
EA 0F0311

DISREGARD PRINTS BEARING EARLIER REVISION DATES

REVISION DATES (PRELIMINARY STAGE ONLY)

SHEET 2 OF 22

FILE => 55-0457-a-itp.dgn

USERNAME => friehard DATE PLOTTED => 16-DEC-2009 TIME PLOTTED => 10:34

DIST	COUNTY	ROUTE	POST MILES TOTAL PROJECT	SHEET No	TOTAL SHEETS
12	Ora	57	16.2/18.6	826	960

REGISTERED CIVIL ENGINEER 6/15/09 DATE

12-14-09
PLANS APPROVAL DATE

The State of California or its officers or agents shall not be responsible for the accuracy or completeness of electronic copies of this plan sheet.

REGISTERED PROFESSIONAL ENGINEER
Miguel Carbuccia
No. C70531
Exp. 12/31/10
CIVIL
STATE OF CALIFORNIA

OCTA
550 S Main Street
Orange, CA 92868

PBS&J
625 The City Drive South, Suite 200
Orange, CA 92868

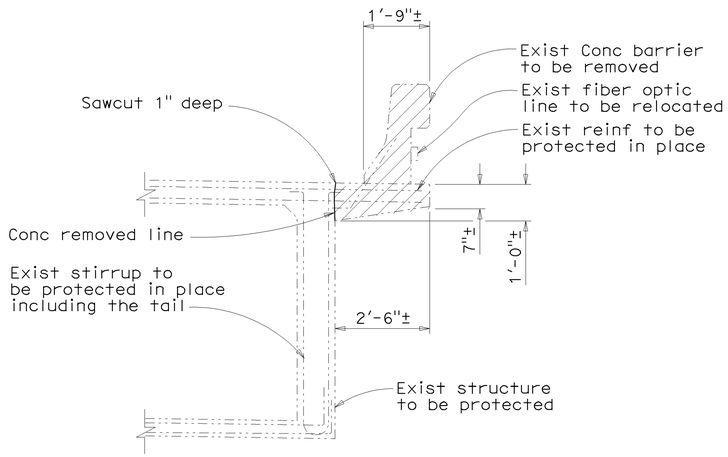

OVERHANG REMOVAL DETAILS & DECK REFINISH LIMIT

No Scale

LEGEND

Indicates Bridge removal (Portion)

Indicates Exist Structure

NOTES:

1. The limit of overhang removal is from BB to EB
2. The limit of barrier removal is between ends of WW.

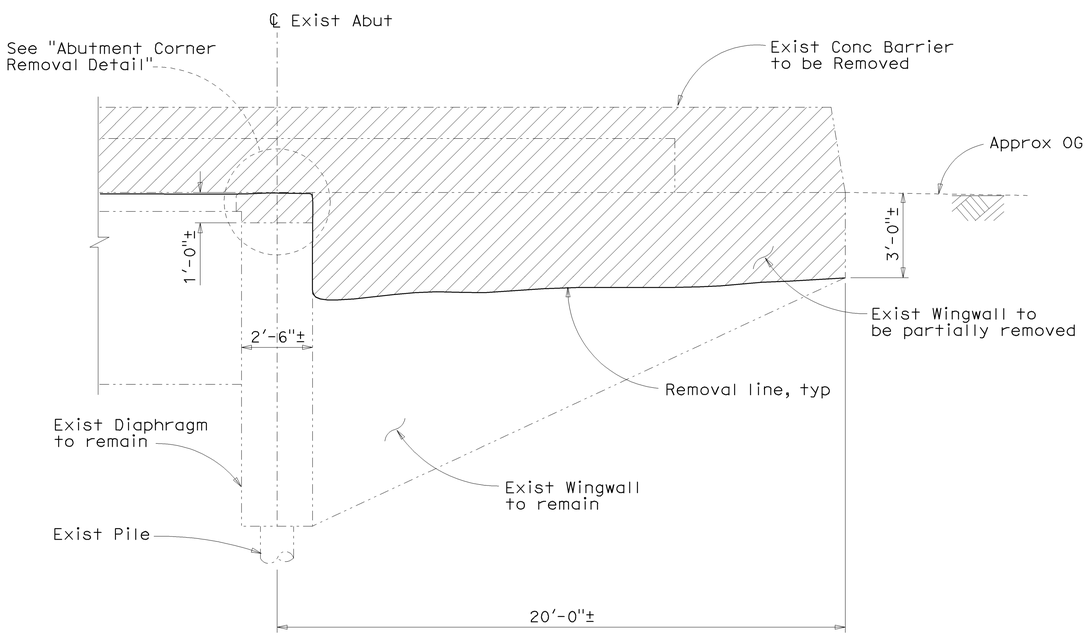

ABUTMENT AND WINGWALL REMOVAL DETAILS

No Scale

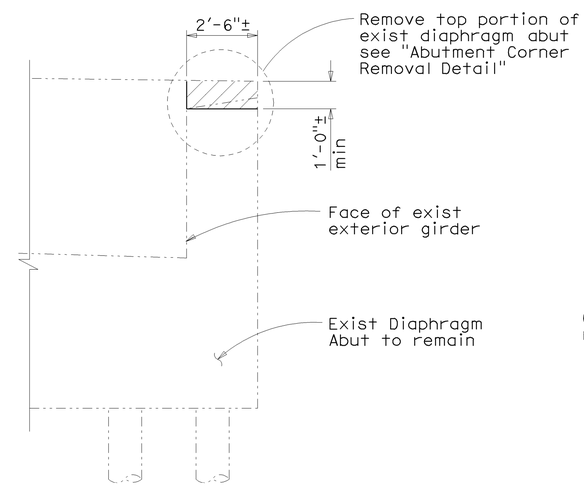

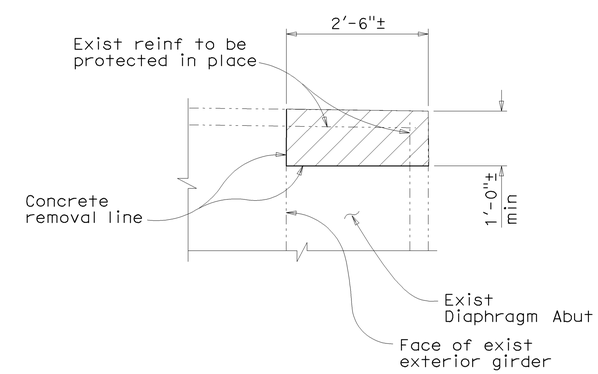

ABUTMENT CORNER REMOVAL DETAIL

NOTE:
THE CONTRACTOR SHALL VERIFY ALL CONTROLLING FIELD DIMENSIONS BEFORE ORDERING OR FABRICATING ANY MATERIAL.

DESIGN OVERSIGHT Jon Hamaguchi
6-24-09
SIGN OFF DATE

	BY	CHECKED
DESIGN	M. Carbuccia	K. Allam
DETAILS	I. Karkoutli	K. Allam
QUANTITIES	L. Khaleghi	V. Nong

PREPARED FOR THE STATE OF CALIFORNIA DEPARTMENT OF TRANSPORTATION

Alaedin Moubayed
PROJECT ENGINEER

BRIDGE NO. 55-0457
POST MILE 16.8

CROWTHER AVENUE UC (WIDEN)
BRIDGE REMOVAL DETAILS

DESIGN DETAIL SHEET (ENGLISH) (REV. 2/25/05)

ORIGINAL SCALE IN INCHES FOR REDUCED PLANS 0 1 2 3

CU 12
EA 0F0311

DISREGARD PRINTS BEARING EARLIER REVISION DATES

REVISION DATES (PRELIMINARY STAGE ONLY)

SHEET 3 OF 22

FILE => 55-0457-c-brd.dgn

USERNAME => trmikesl DATE PLOTTED => 17-DEC-2009 TIME PLOTTED => 13:08

DIST	COUNTY	ROUTE	POST MILES TOTAL PROJECT	SHEET No	TOTAL SHEETS
12	Ora	57	16.2/18.6	827	960

REGISTERED CIVIL ENGINEER 6/15/09 DATE

12-14-09
PLANS APPROVAL DATE

REGISTERED PROFESSIONAL ENGINEER
Miguel Carbuccia
No. C70531
Exp. 12/31/10
CIVIL
STATE OF CALIFORNIA

The State of California or its officers or agents shall not be responsible for the accuracy or completeness of electronic copies of this plan sheet.

OCTA
550 S Main Street
Orange, CA 92868

PBS&J
625 The City Drive South, Suite 200
Orange, CA 92868

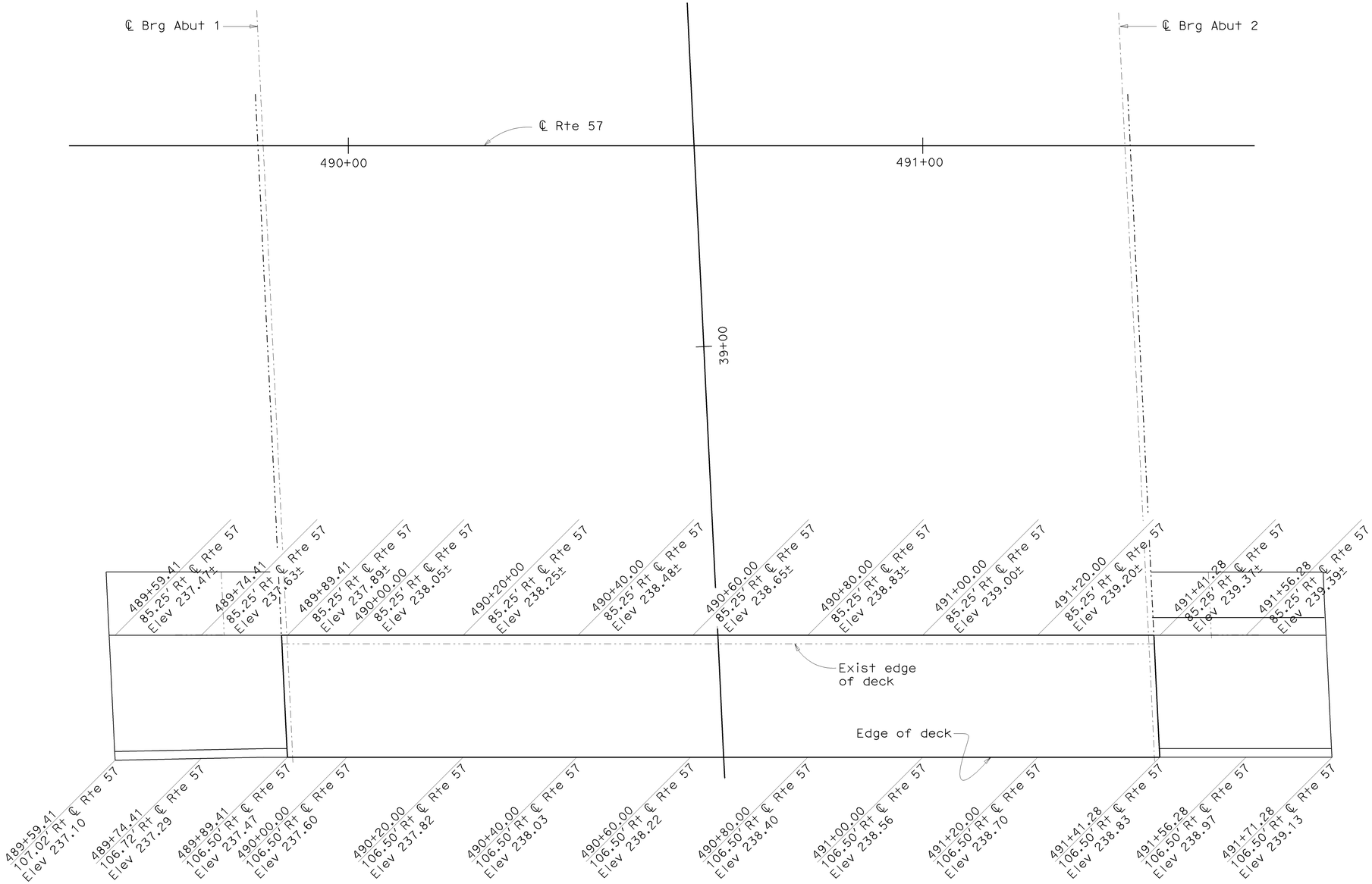

NOTE:
THE CONTRACTOR SHALL VERIFY ALL CONTROLLING FIELD DIMENSIONS BEFORE ORDERING OR FABRICATING ANY MATERIAL.

DESIGN OVERSIGHT Jon Hamaguchi
6-24-09
SIGN OFF DATE

	BY	CHECKED
DESIGN	M. Carbuccia	K. Allam
DETAILS	I. Karkoutli	K. Allam
QUANTITIES	L. Khaleghi	V. Nong

PREPARED FOR THE
STATE OF CALIFORNIA
DEPARTMENT OF TRANSPORTATION

Alaedin Moubayed
PROJECT ENGINEER

BRIDGE NO. 55-0457
POST MILE 16.8

CROWTHER AVENUE UC (WIDEN)
DECK ELEVATIONS

DESIGN DETAIL SHEET (ENGLISH) (REV. 2/25/05)

ORIGINAL SCALE IN INCHES FOR REDUCED PLANS 0 1 2 3

CU 12
EA 0F0311

DISREGARD PRINTS BEARING EARLIER REVISION DATES

REVISION DATES (PRELIMINARY STAGE ONLY)

SHEET 4 OF 22

FILE => 55-0457-d-de01.dgn

USERNAME => trlenard DATE PLOTTED => 16-DEC-2009 TIME PLOTTED => 10:34

DIST	COUNTY	ROUTE	POST MILES TOTAL PROJECT	SHEET No	TOTAL SHEETS
12	Ora	57	16.2/18.6	828	960

REGISTERED CIVIL ENGINEER — DATE 6/15/09

12-14-09
PLANS APPROVAL DATE

REGISTERED PROFESSIONAL ENGINEER — Miguel Carbuccia — No. C70531 — Exp. 12/31/10 — CIVIL — STATE OF CALIFORNIA

The State of California or its officers or agents shall not be responsible for the accuracy or completeness of electronic copies of this plan sheet.

OCTA
550 S Main Street
Orange, CA 92868

PBS&J
625 The City Drive South, Suite 200
Orange, CA 92868

NOTES

1. Not all piles are shown
2. Location of exist structure foundations is approximate.

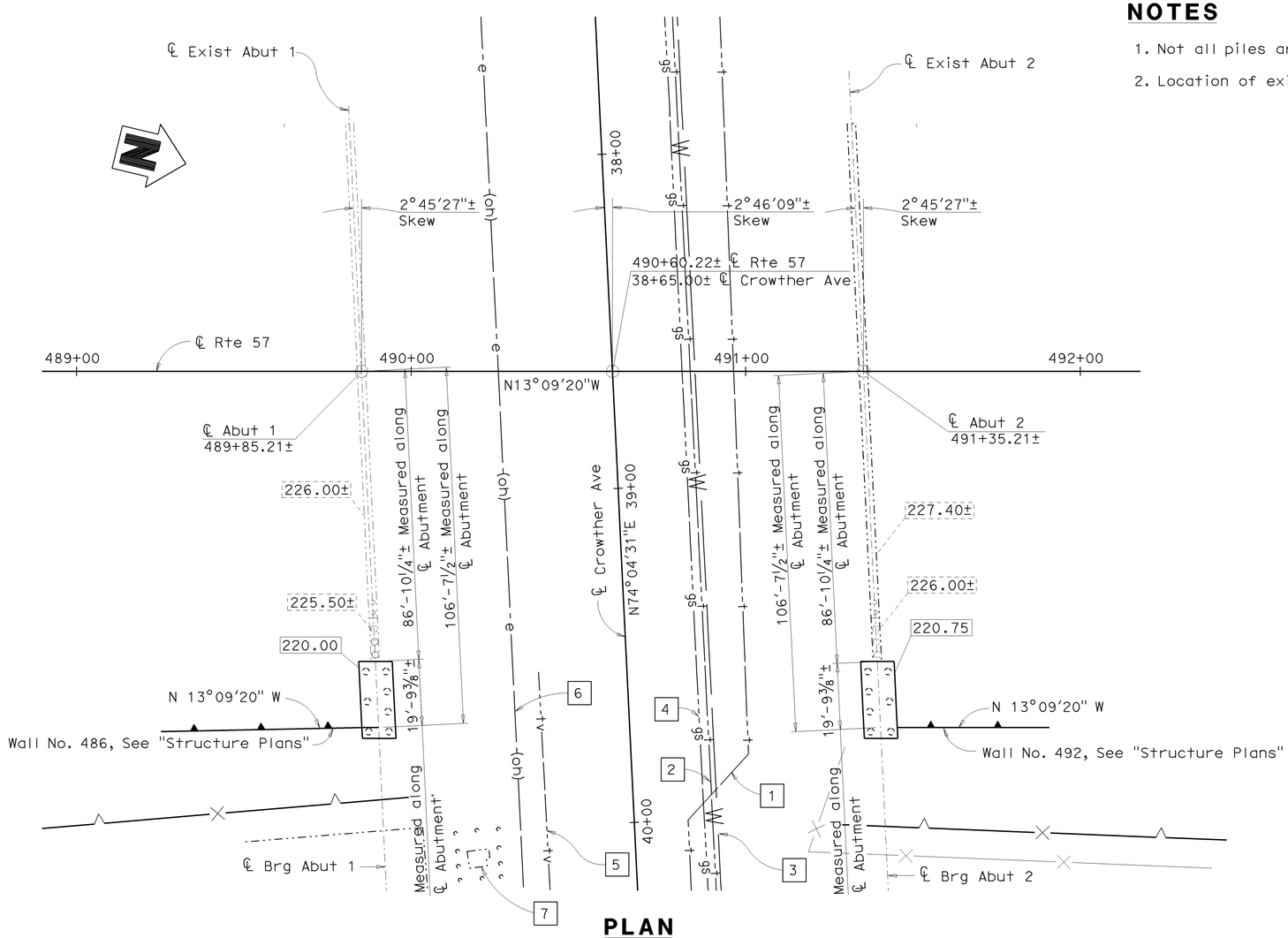

PLAN
1" = 20′

LEGEND

XX.XX	Indicates bottom of footing elevation
XX.XX±	Indicates bottom of Exist footing elevation
○	Indicates Existing CIDH Pile
◌	Indicates New CIDH Pile
—·—·—	Indicates Exist Structure
———	Indicates New Structure

UTILITY NOTES

1	Exist 2-4" CPC PAC. Bell U.G. Conduit AT&T
2	Exist (ABN) PAC. Bell U.G. Conduit AT&T
3	Exist 12" AC Water (GSWC)
4	Exist 2" PE SO CAL GAS Line
5	Exist Television (UG)
6	Exist SCE OH Transmission Line (4 Wire & Comm.)
7	Power Post

PILE DATA TABLE

Location	Pile Type	Nominal Resistance		Design Tip Elevation (ft)	Specified Tip Elevation (ft)	Nominal Driving Resistance (kips)
		Compression (kips)	Tension (kips)			
Abut 1	24" CIDH	400	0	+178(a) +191(c) +190(d)	+178	N/A
Abut 2	24" CIDH	400	0	+178(a) +191(c) +190(d)	+178	N/A

Note: Design tip elevation are controlled by: (a) Compression, (c) Settlement, and (d) Lateral Loads

GEOTECHNICAL PROFESSIONAL — APPROVAL DATE 6/15/09

NOTES:
THE CONTRACTOR SHALL VERIFY ALL CONTROLLING FIELD DIMENSIONS BEFORE ORDERING OR FABRICATING ANY MATERIAL.

BASIS OF COORDINATES:

Bearings and Coordinates as shown hereon are in terms of the California Coordinate System of 1983 (CCS83, Epoch 1991.35), Zone 6; based locally upon the following Control Stations as published by the County of Orange:

Name	Northing (ft.)-GRID	Easting (ft.)-GRID
2001 OCS 3282	2247998.84	6069149.29
2017 OCS 0560	2260355.81	6065880.43
2023 OCS 0111	2270990.23	6066809.18

All Coordinates and Distances are in terms of the U.S. Survey Foot, 1 meter = 39.37/12 feet
As-Built elevation is adjusted by adding 2.00 feet to match with survey data based on the current vertical datum.

BENCHMARKS:

Designation: 1L-54-82 Elev = 153.171
Described by OCS 2002 - Found 3¾" OCS Aluminum Benchmark Disk Stamped "1L-54-82", set in the Top of a 6 in. by 6 in. Concrete Post. Monument is located along the Westerly Levee of the Santa Ana River, 0.25 Miles Northerly along Levee from the Centerline of Orangewood Avenue, 200 ft. Northeasterly of the Easterly Leg of the Anaheim Angels 200 ft. tall sign, 69 ft. Westerly of the Centerline of the Bike Trail and 1.5 ft. Westerly of a Steel OCS Witness Post. Monument is set 0.3 below the Ground.

Designation: 2G-25-70 Elev = 275.872
Described by OCS 2003 - Found 3¾" OCS Aluminum Benchmark Disk Stamped "2G-25-70", set in the Southeasterly Corner of a 4 ft. by 6 ft. Concrete Catch Basin. Monument is Located in the Northwesterly Corner of the Intersection of Yorba Linda Boulevard and Deerpark Drive, 75 ft. Westerly of the Centerline of Deerpark and 46 ft. Northerly of the Centerline of Yorba Linda. Monument is set Level with the Sidewalk.

DESIGN OVERSIGHT Jon Hamaguchi
6-24-09
SIGN OFF DATE

SCALE: 1"= 20′	VERT.DATUM NAVD88	HORZ.DATUM CCS83	
PHOTOGRAMMETRY AS OF: 12-02-2007	ALIGNMENT TIES		
SURVEYED BY B. Madigan	DRAFTED BY B. Zemam		
FIELD CHECKED BY B. Cox	CHECKED BY B. Rai		

DESIGN	BY M. Carbuccia	CHECKED K. Allam
DETAILS	BY I. Karkoutli	CHECKED K. Allam
QUANTITIES	BY L. Khaleghi	CHECKED V. Nong

PREPARED FOR THE STATE OF CALIFORNIA DEPARTMENT OF TRANSPORTATION

Alaedin Moubayed
PROJECT ENGINEER

BRIDGE NO. 55-0457
POST MILE 16.8

CROWTHER AVENUE UC (WIDEN)
FOUNDATION PLAN

FOUNDATION PLAN SHEET (ENGLISH) (REV. 2-25-05)

ORIGINAL SCALE IN INCHES FOR REDUCED PLANS 0 1 2 3

CU 12
EA 0F0311

DISREGARD PRINTS BEARING EARLIER REVISION DATES

REVISION DATES (PRELIMINARY STAGE ONLY)

SHEET 5 OF 22

FILE => 55-0457-e-fdp101.dgn

USERNAME => trlenard DATE PLOTTED => 16-DEC-2009 TIME PLOTTED => 10:34

DIST	COUNTY	ROUTE	POST MILES TOTAL PROJECT	SHEET No	TOTAL SHEETS
12	Ora	57	16.2/18.6	829	960

REGISTERED CIVIL ENGINEER — DATE 6/15/09

12-14-09
PLANS APPROVAL DATE

The State of California or its officers or agents shall not be responsible for the accuracy or completeness of electronic copies of this plan sheet.

REGISTERED PROFESSIONAL ENGINEER — Miguel Carbuccia — No. C70531 — Exp. 12/31/10 — CIVIL — STATE OF CALIFORNIA

OCTA
550 S Main Street
Orange, CA 92868

PBS&J
625 The City Drive South, Suite 200
Orange, CA 92868

NOTES

1. Abutment 1 is shown, Abutment 2 similar.
2. For Abutment removal details, see "Bridge Removal Details" sheet.
3. For section "B-B" see "Abutment Details No. 1" sheet.
4. For Section"C-C" see "Abutment Details No. 2" sheet.
5. For "Detail 1", see "Abutment Details No. 2" sheet.
6. See "Drainage Details" on "Structure Approach Drainage Details" sheet.
7. For Shear Key Detail, see "Abutment Details No. 2" sheet
8. For Girder prestress Grillage and block out, See "End Diaphragm Detail" on "Typical Section" Sheet
9. For Utility opening, see "Fiber Optic Conduits Details" sheet.
10. Contractor to use Joint Seal type to match Existing.

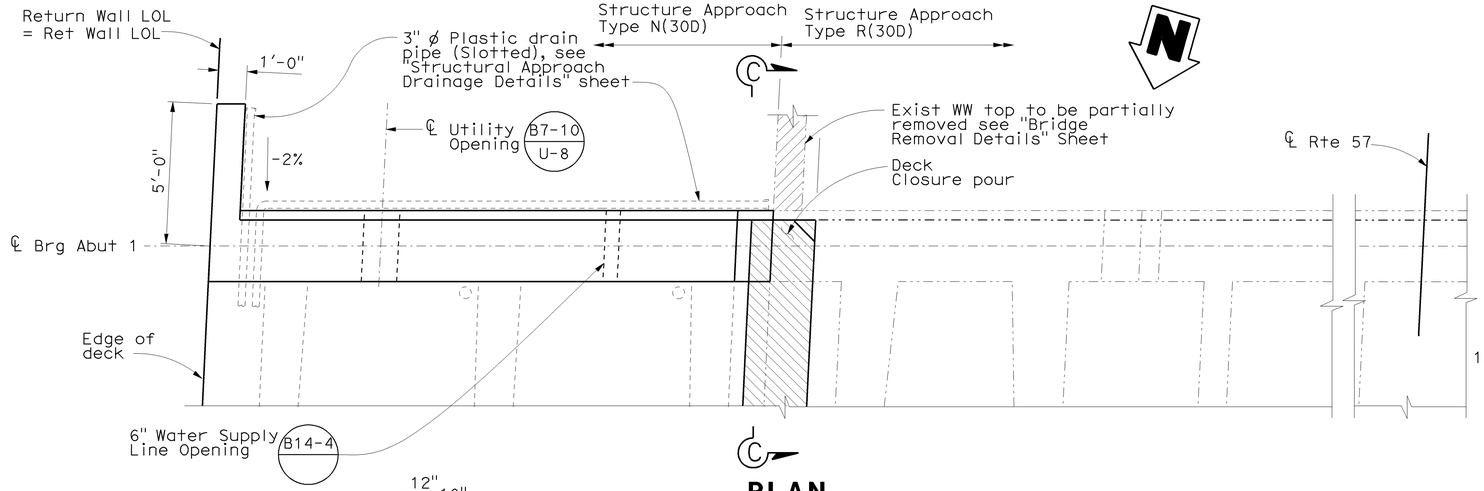

PLAN

3/8" = 1'-0"

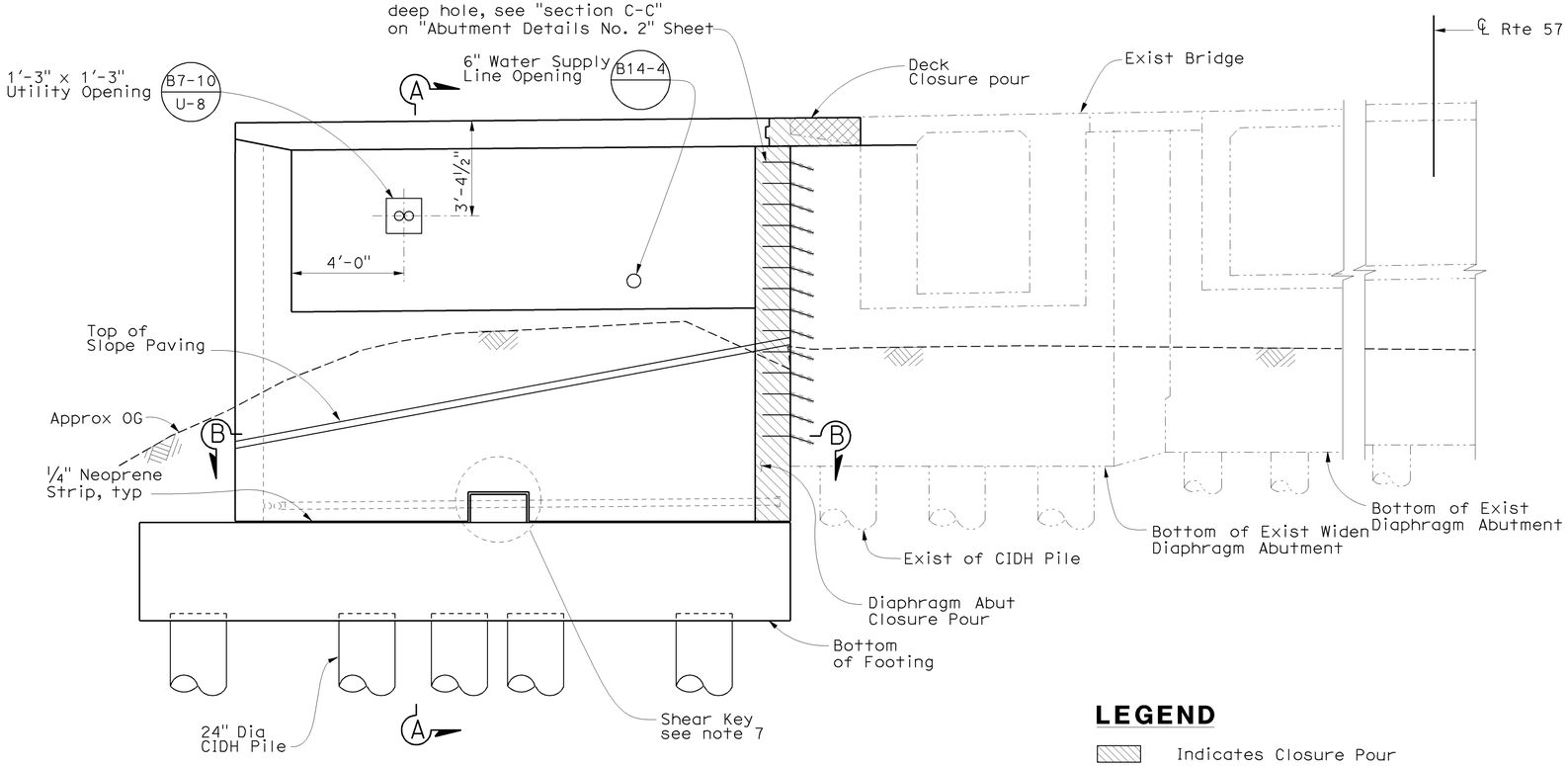

ELEVATION

3/8" = 1'-0"

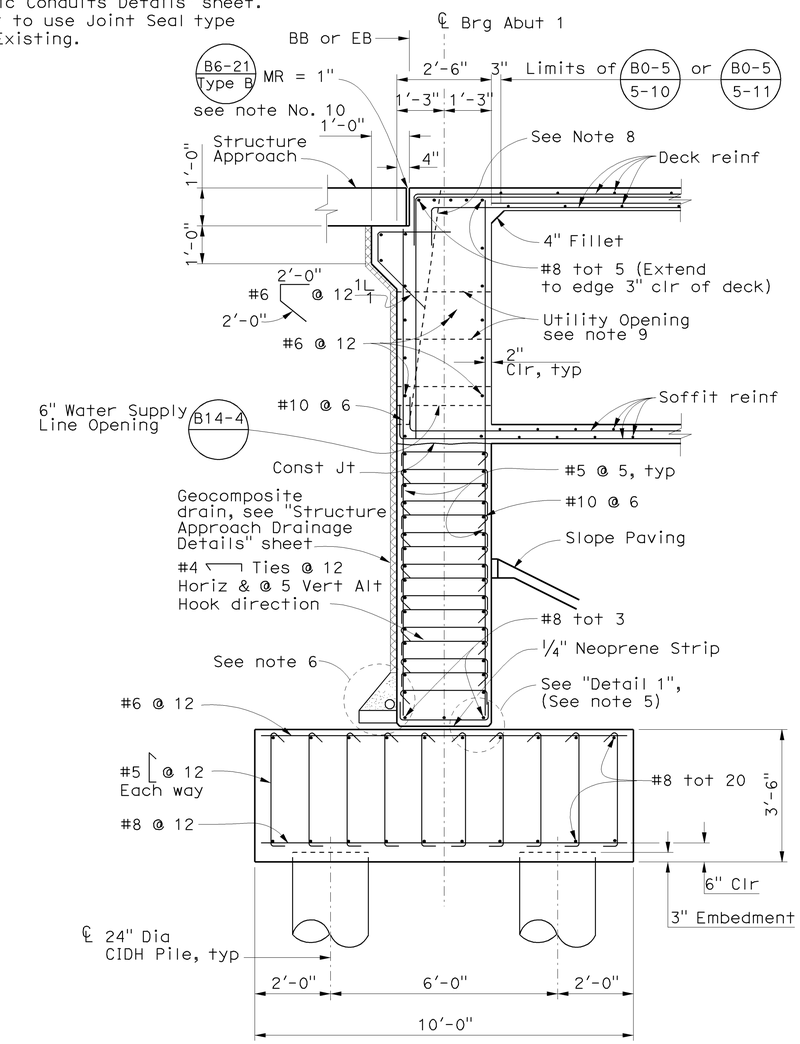

SECTION A-A

1/2" = 1'-0"

LEGEND

- Indicates Closure Pour
- Indicates Bridge Removal (Portion)
- Indicates Exist Structure
- Indicates New Structure

NOTE:
THE CONTRACTOR SHALL VERIFY ALL CONTROLLING FIELD DIMENSIONS BEFORE ORDERING OR FABRICATING ANY MATERIAL.

DESIGN OVERSIGHT — Jon Hamaguchi
6-24-09
SIGN OFF DATE

	BY	CHECKED
DESIGN	M. Carbuccia	K. Allam
DETAILS	I. Karkoutli	K. Allam
QUANTITIES	L. Khaleghi	V. Nong

PREPARED FOR THE STATE OF CALIFORNIA DEPARTMENT OF TRANSPORTATION

Alaedin Moubayed
PROJECT ENGINEER

BRIDGE NO. 55-0457
POST MILE 16.8

CROWTHER AVENUE UC (WIDEN)
ABUTMENT LAYOUT

DESIGN DETAIL SHEET (ENGLISH) (REV. 2/25/05)

ORIGINAL SCALE IN INCHES FOR REDUCED PLANS 0 1 2 3

CU 12
EA 0F0311

DISREGARD PRINTS BEARING EARLIER REVISION DATES

REVISION DATES (PRELIMINARY STAGE ONLY)

SHEET 6 OF 22

FILE => 55-0457-f-a01_1o1.dgn

USERNAME => trlenard DATE PLOTTED => 16-DEC-2009 TIME PLOTTED => 10:34

DIST	COUNTY	ROUTE	POST MILES TOTAL PROJECT	SHEET No	TOTAL SHEETS
12	Ora	57	16.2/18.6	830	960

REGISTERED CIVIL ENGINEER 6/15/09 DATE

12-14-09
PLANS APPROVAL DATE

The State of California or its officers or agents shall not be responsible for the accuracy or completeness of electronic copies of this plan sheet.

REGISTERED PROFESSIONAL ENGINEER Miguel Carbuccia No. C70531 Exp. 12/31/10 CIVIL STATE OF CALIFORNIA

OCTA
550 S Main Street
Orange, CA 92868

PBS&J
625 The City Drive South, Suite 200
Orange, CA 92868

LEGEND

- Indicates Closure Pour
- Indicates Bridge Removal (Portion)
- Indicates Exist Structure
- Indicates New Structure

NOTES

1. Abutment 1 shown, Abutment 2 similar.
2. For Section "D-D" See "Abutment Details No. 2" sheet.
3. No two adjacent piles can be constructed concurrently

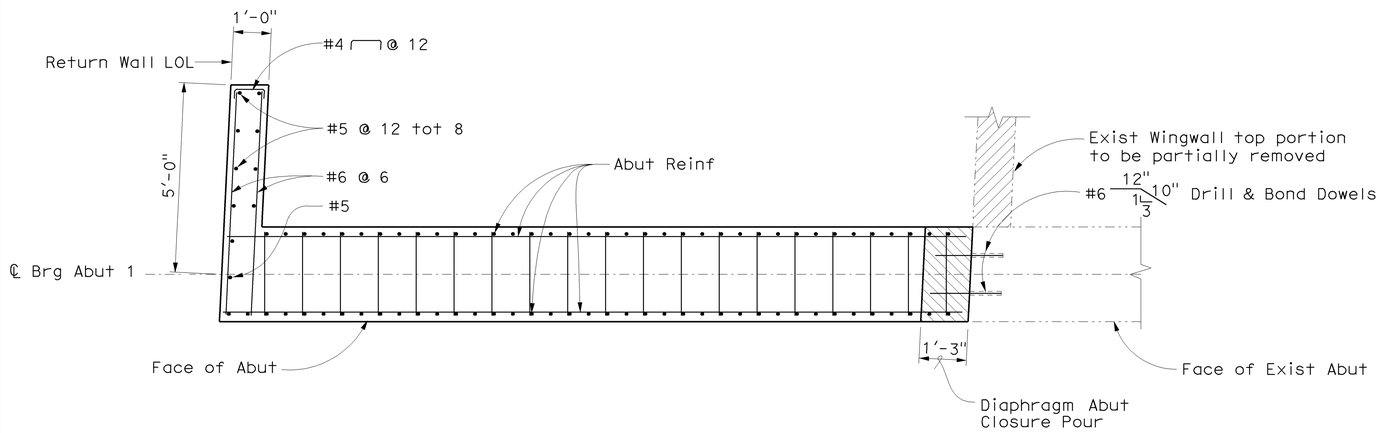

SECTION B-B

½" = 1'-0"

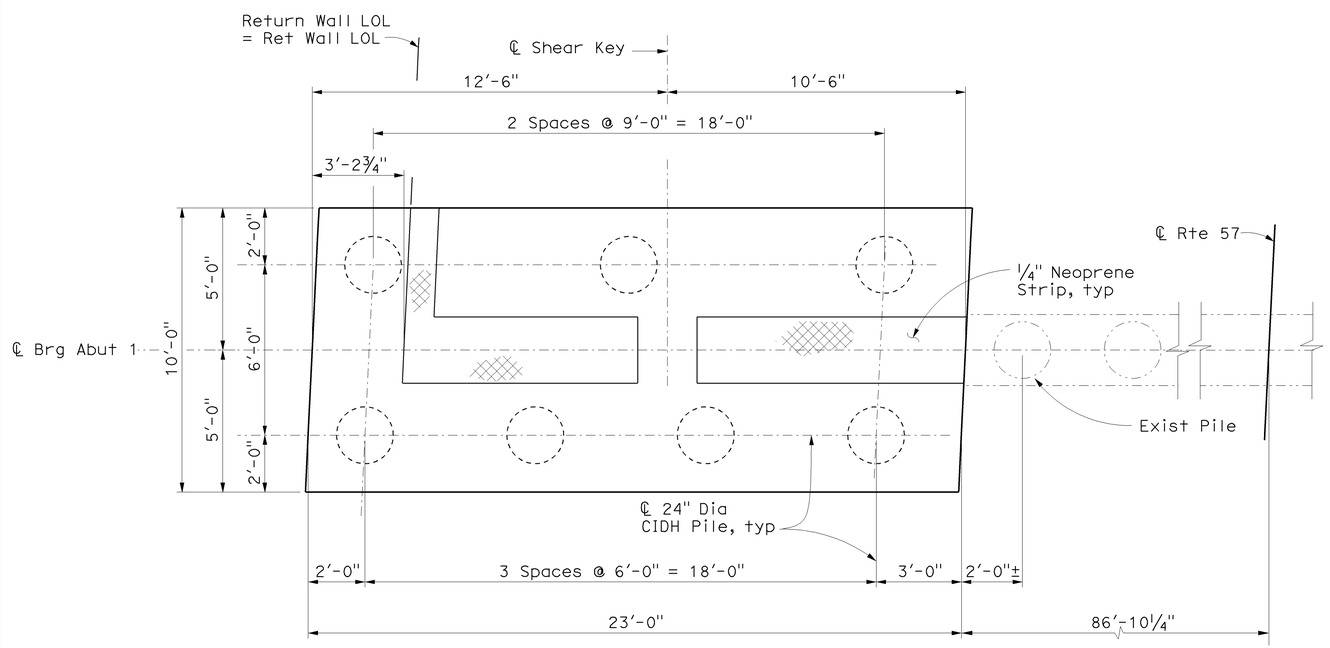

PILES LAYOUT

⅜" = 1'-0"

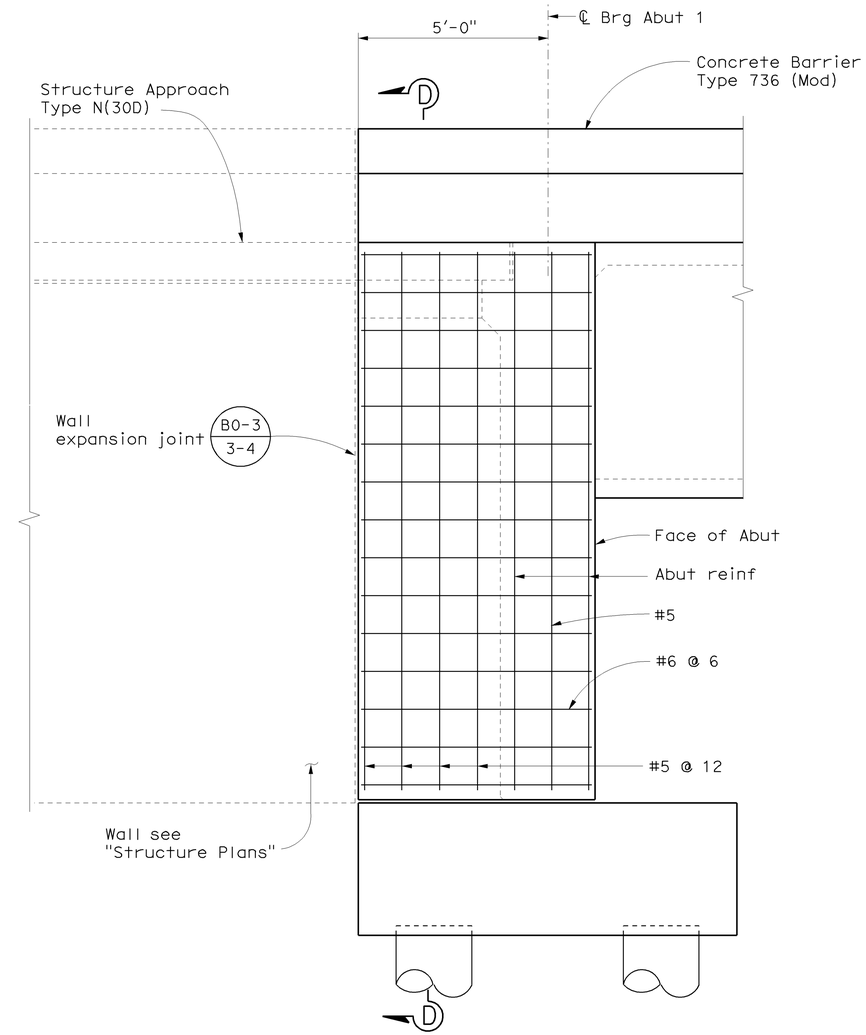

RETURN WALL ELEVATION

½" = 1'-0"

NOTE:
THE CONTRACTOR SHALL VERIFY ALL CONTROLLING FIELD DIMENSIONS BEFORE ORDERING OR FABRICATING ANY MATERIAL.

DESIGN OVERSIGHT Jon Hamaguchi
6-24-09
SIGN OFF DATE

	BY	CHECKED
DESIGN	M. Carbuccia	K. Allam
DETAILS	I. Karkoutli	K. Allam
QUANTITIES	L. Khaleghi	V. Nong

PREPARED FOR THE STATE OF CALIFORNIA DEPARTMENT OF TRANSPORTATION

Alaedin Moubayed
PROJECT ENGINEER

BRIDGE NO. 55-0457
POST MILE 16.8

CROWTHER AVENUE UC (WIDEN)
ABUTMENT DETAILS NO. 1

DESIGN DETAIL SHEET (ENGLISH) (REV. 2/25/05)

ORIGINAL SCALE IN INCHES FOR REDUCED PLANS 0 1 2 3

CU 12
EA 0F0311

DISREGARD PRINTS BEARING EARLIER REVISION DATES

REVISION DATES (PRELIMINARY STAGE ONLY)

SHEET 7 OF 22

FILE => 55-0457-f-a01dt01.dgn

USERNAME => trienard DATE PLOTTED => 16-DEC-2009 TIME PLOTTED => 10:35

DIST	COUNTY	ROUTE	POST MILES TOTAL PROJECT	SHEET No	TOTAL SHEETS
12	Ora	57	16.2/18.6	831	960

REGISTERED CIVIL ENGINEER 6/15/09 DATE

12-14-09
PLANS APPROVAL DATE

REGISTERED PROFESSIONAL ENGINEER Miguel Carbuccia No. C70531 Exp. 12/31/10 CIVIL STATE OF CALIFORNIA

The State of California or its officers or agents shall not be responsible for the accuracy or completeness of electronic copies of this plan sheet.

OCTA
550 S Main Street
Orange, CA 92868

PBS&J
625 The City Drive South, Suite 200
Orange, CA 92868

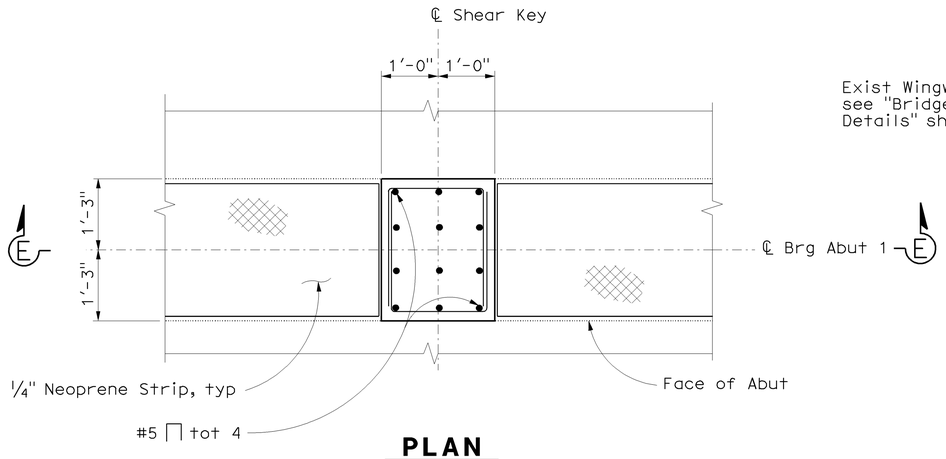

PLAN
¾" = 1'-0"

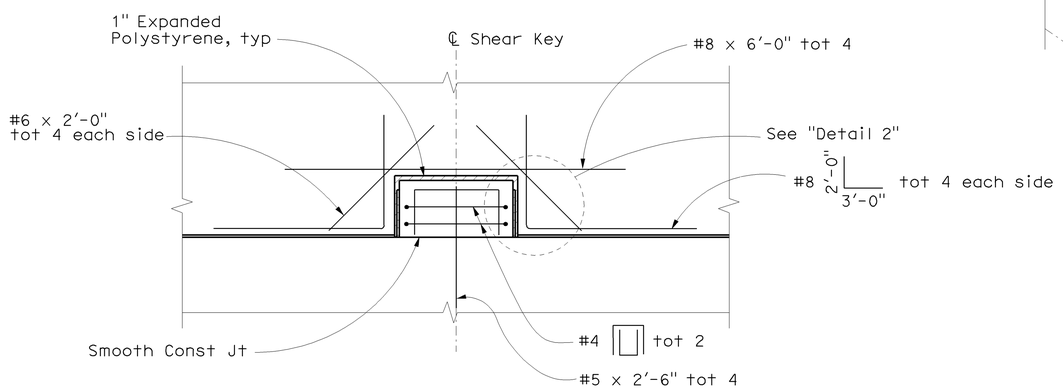

SECTION E-E
SHEAR KEY DETAILS
¾" = 1'-0"

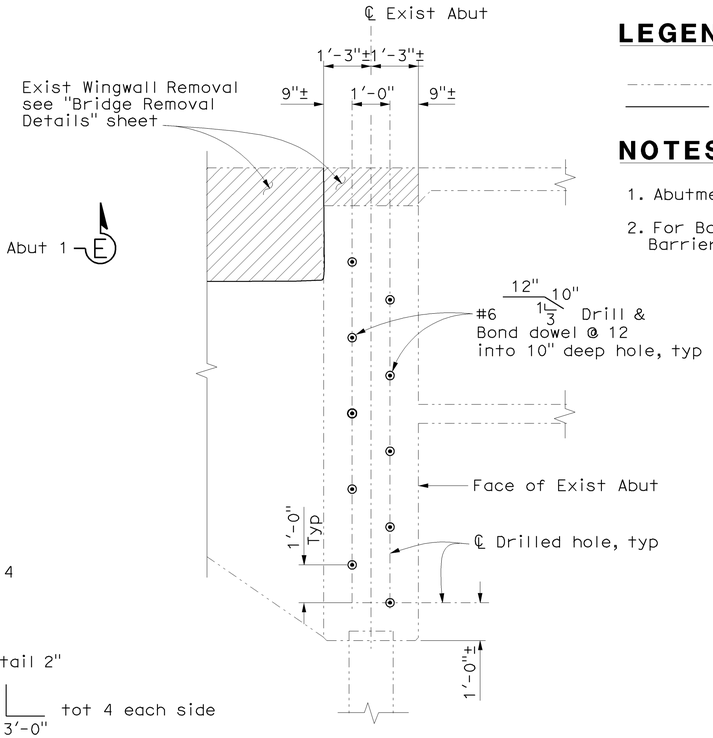

SECTION C-C
½" = 1'-0"

LEGEND

Indicates Existing Structure
Indicates New Structure

NOTES

1. Abutment 1 shown, Abutment 2 similar.
2. For Barrier on return wall, see "Concrete Barrier Type 736 (Mod)" sheet.

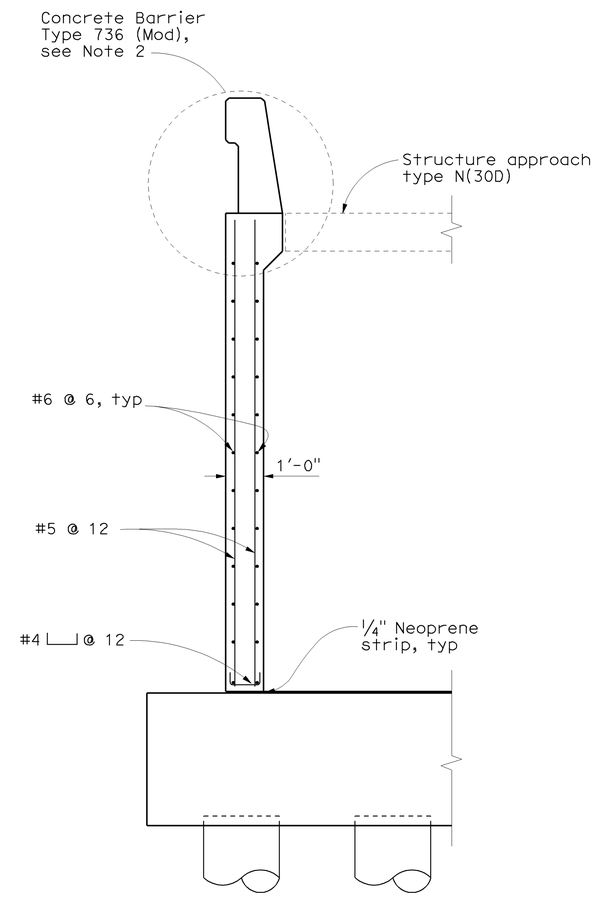

SECTION D-D
No Scale

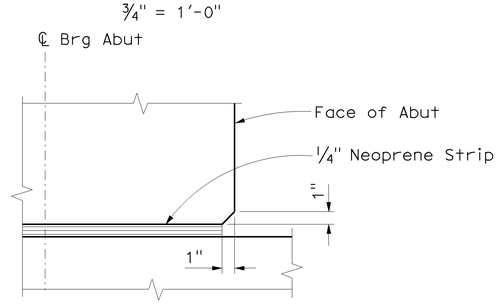

DETAIL 1
No Scale

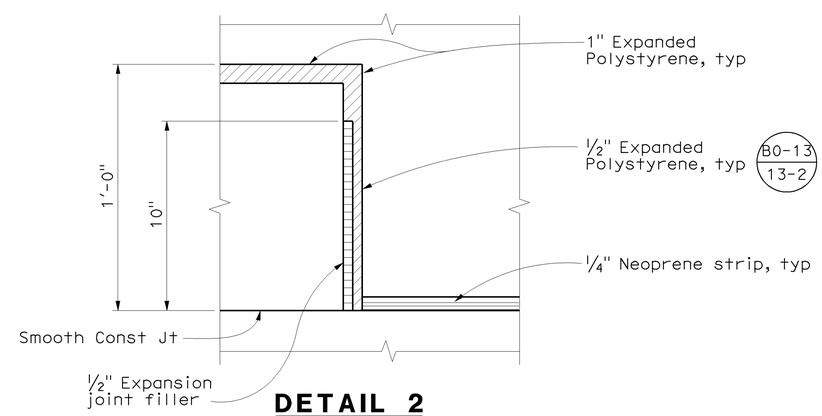

DETAIL 2
No Scale

NOTE:
THE CONTRACTOR SHALL VERIFY ALL CONTROLLING FIELD DIMENSIONS BEFORE ORDERING OR FABRICATING ANY MATERIAL.

DESIGN OVERSIGHT Jon Hamaguchi
6-24-09
SIGN OFF DATE

	BY	CHECKED
DESIGN	M. Carbuccia	K. Allam
DETAILS	I. Karkoutli	K. Allam
QUANTITIES	L. Khaleghi	V. Nong

PREPARED FOR THE STATE OF CALIFORNIA DEPARTMENT OF TRANSPORTATION

Alaedin Moubayed
PROJECT ENGINEER

BRIDGE NO. 55-0457
POST MILE 16.8

CROWTHER AVENUE UC (WIDEN)
ABUTMENT DETAILS NO. 2

DESIGN DETAIL SHEET (ENGLISH) (REV. 2/25/05)

ORIGINAL SCALE IN INCHES FOR REDUCED PLANS 0 1 2 3

CU 12
EA 0F0311

DISREGARD PRINTS BEARING EARLIER REVISION DATES

REVISION DATES (PRELIMINARY STAGE ONLY)

SHEET 8 OF 22

FILE => 55-0457-f-a01dt02.dgn

USERNAME => trlenard DATE PLOTTED => 16-DEC-2009 TIME PLOTTED => 10:35

DIST	COUNTY	ROUTE	POST MILES TOTAL PROJECT	SHEET No	TOTAL SHEETS
12	Ora	57	16.2/18.6	832	960

REGISTERED CIVIL ENGINEER 6/15/09 DATE

12-14-09
PLANS APPROVAL DATE

The State of California or its officers or agents shall not be responsible for the accuracy or completeness of electronic copies of this plan sheet.

REGISTERED PROFESSIONAL ENGINEER Miguel Carbuccia No. C70531 Exp. 12/31/10 CIVIL STATE OF CALIFORNIA

OCTA
550 S Main Street
Orange, CA 92868

PBS&J
625 The City Drive South, Suite 200
Orange, CA 92868

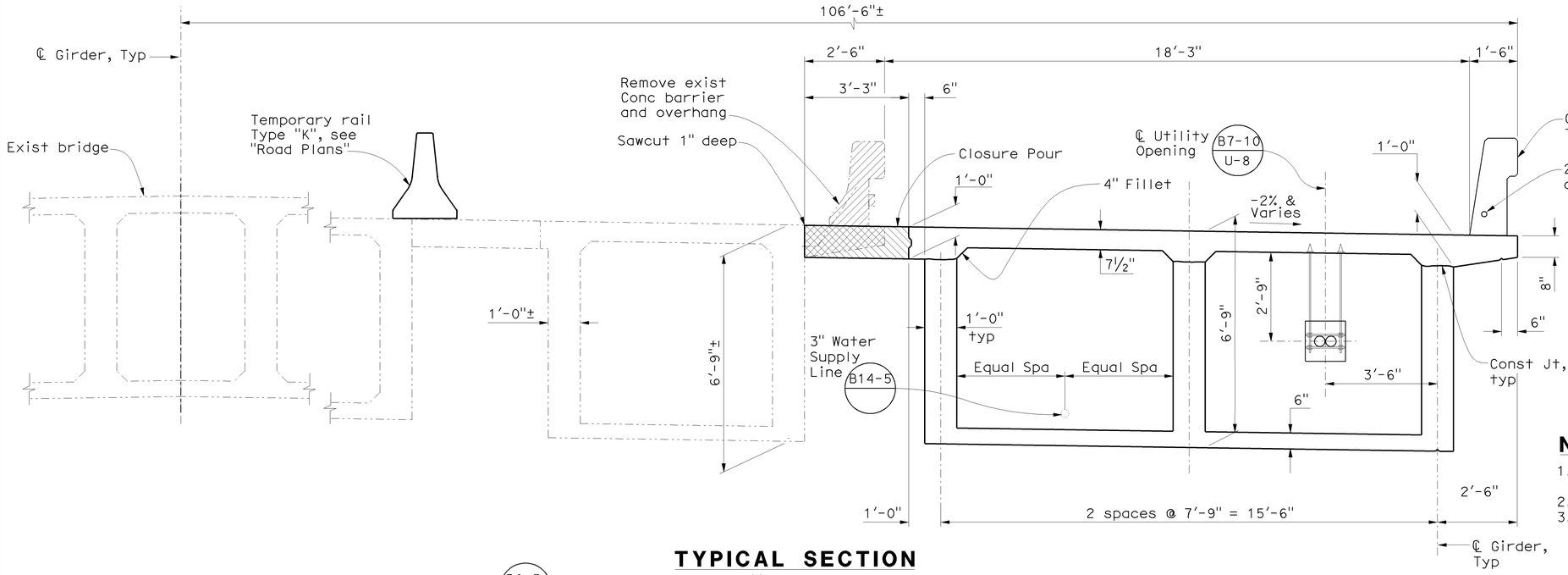

TYPICAL SECTION

½" = 1'-0"

LEGEND

- Indicates Closure Pour
- Indicates Bridge Removal (Portion)
- Indicates Existing Structure
- Indicates New Structure
- ○ Indicates Additional Longitudinal Reinforcement
- ✳ Indicates 2½" min clr & 4" max clr to stirrups, see B8-5

NOTES

1. See "Additional Soffit Reinforcement" sheet for rebar details.
2. Bottom transverse reinf shall be placed along ℄ Rte 57.
3. Falsework Release:
   Alternative 1: Falsework shall be released as soon as permitted by the specifications . Closure pour shall not be placed sooner than 60 days after the falsework has been released.
   Alternative 2: Falsework shall not be released less than 28 days after the last concrete has been placed Closure pour shall not be placed sooner than 14 days after the falsework has been released.
   When falsework release alternative 2 is used, camber values are 0.75 times those shown.
4. For additional transverse reinf, see "Girder Layout" sheet.

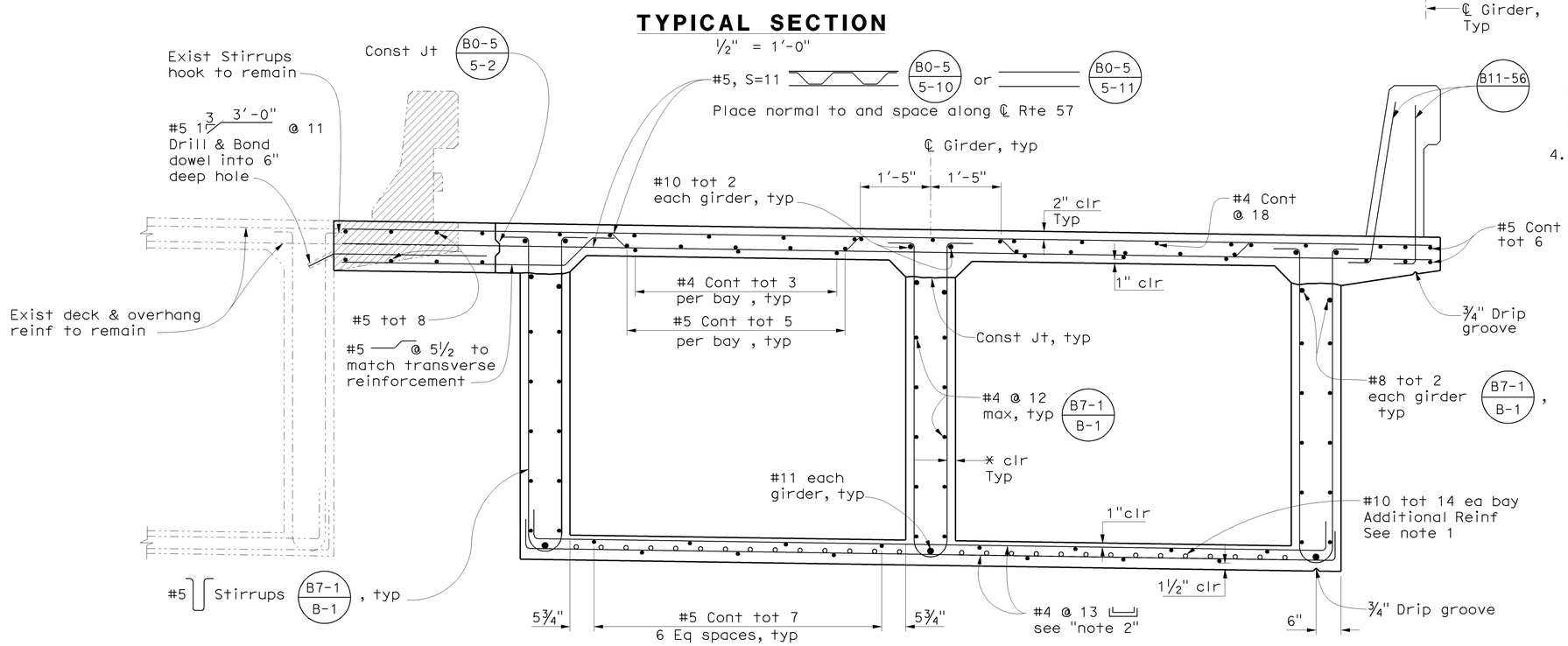

TYPICAL REINFORCEMENT SECTION

¾" = 1'-0"

B0-5 B7-1 B8-5

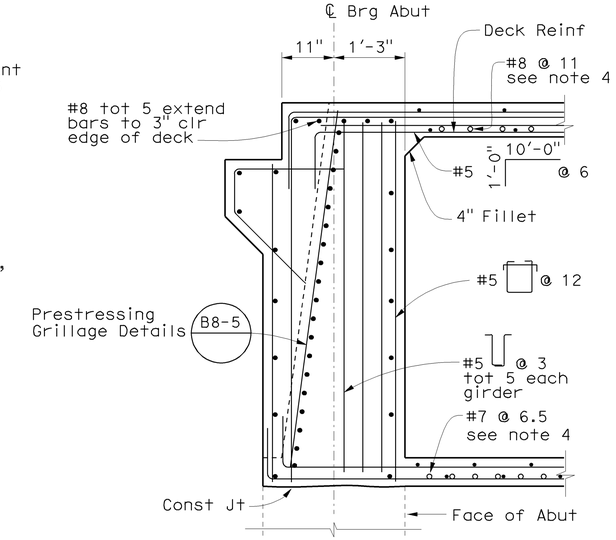

END DIAPHRAGM DETAIL

¾" = 1'-0"

NOTE:
THE CONTRACTOR SHALL VERIFY ALL CONTROLLING FIELD DIMENSIONS BEFORE ORDERING OR FABRICATING ANY MATERIAL.

DESIGN OVERSIGHT Jon Hamaguchi
6-24-09
SIGN OFF DATE

	BY	CHECKED
DESIGN	M. Carbuccia	K. Allam
DETAILS	I. Karkoutli	K. Allam
QUANTITIES	L. Khaleghi	V. Nong

PREPARED FOR THE STATE OF CALIFORNIA DEPARTMENT OF TRANSPORTATION

Alaedin Moubayed
PROJECT ENGINEER

BRIDGE NO. 55-0457
POST MILE 16.8

CROWTHER AVENUE UC (WIDEN)
TYPICAL SECTION

DESIGN DETAIL SHEET (ENGLISH) (REV. 2/25/05)

ORIGINAL SCALE IN INCHES FOR REDUCED PLANS 0 1 2 3

CU 12
EA 0F0311

DISREGARD PRINTS BEARING EARLIER REVISION DATES

REVISION DATES (PRELIMINARY STAGE ONLY)

SHEET 9 OF 22

FILE => 55-0457-k-ts01.dgn

USERNAME => friehard DATE PLOTTED => 16-DEC-2009 TIME PLOTTED => 10:35

DIST	COUNTY	ROUTE	POST MILES TOTAL PROJECT	SHEET No	TOTAL SHEETS
12	Ora	57	16.2/18.6	833	960

REGISTERED CIVIL ENGINEER 6/15/09 DATE

12-14-09
PLANS APPROVAL DATE

The State of California or its officers or agents shall not be responsible for the accuracy or completeness of electronic copies of this plan sheet.

REGISTERED PROFESSIONAL ENGINEER
Miguel Carbuccia
No. C70531
Exp. 12/31/10
CIVIL
STATE OF CALIFORNIA

OCTA
550 S Main Street
Orange, CA 92868

PBS&J
625 The City Drive South, Suite 200
Orange, CA 92868

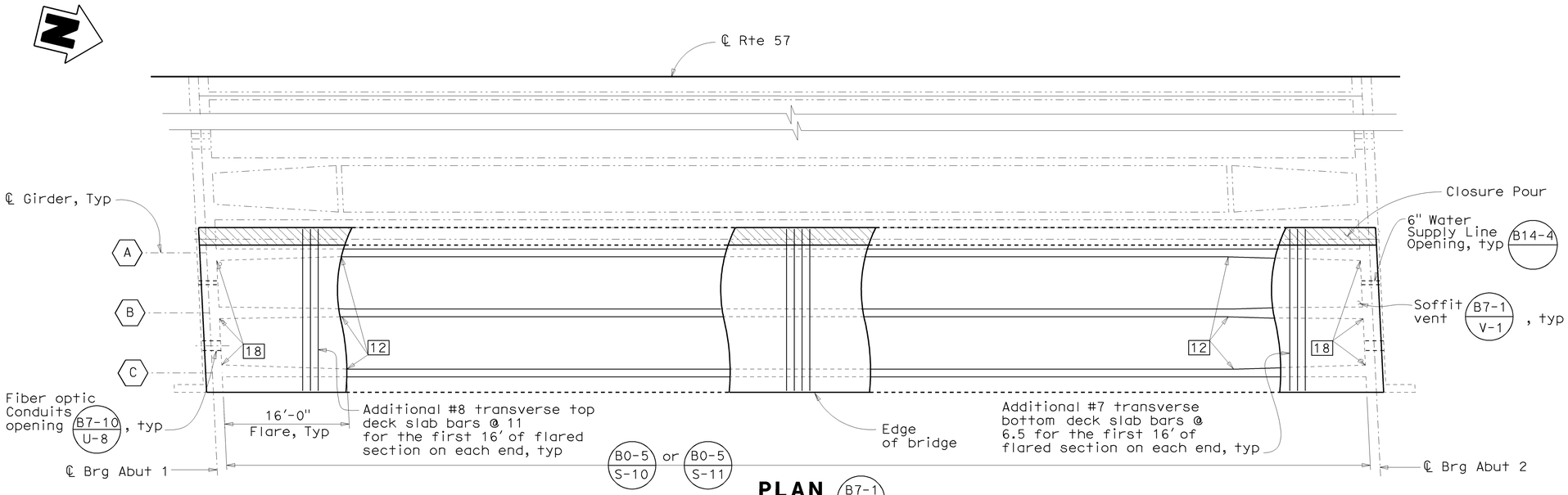

PLAN B7-1
1/8" = 1'-0"

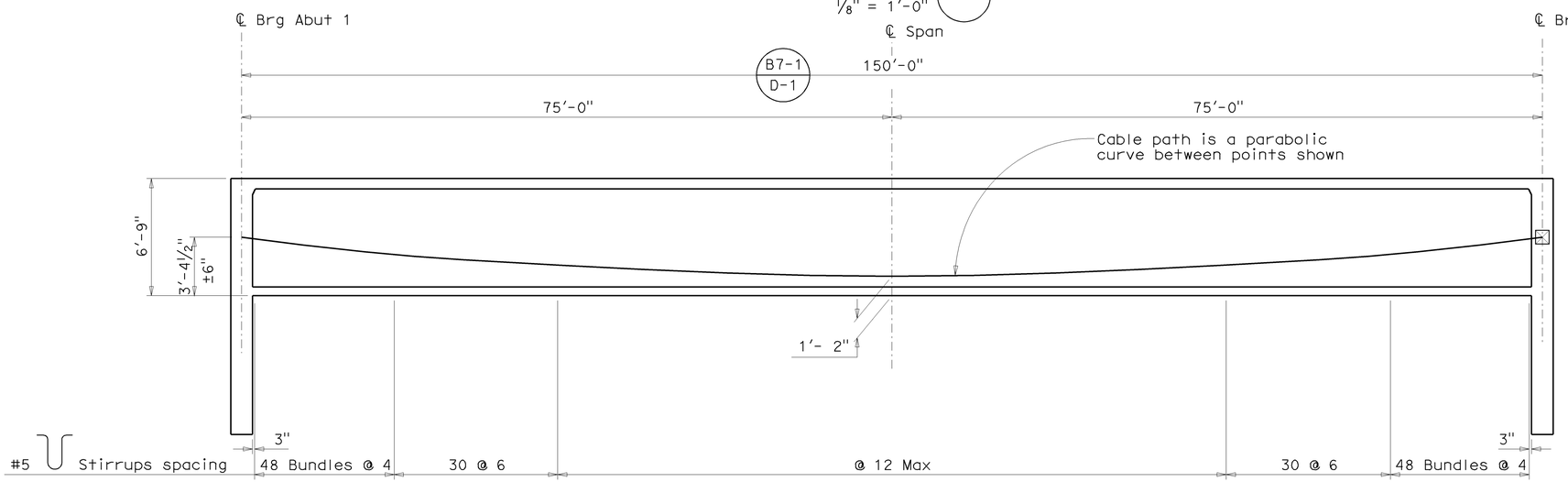

LONGITUDINAL SECTION B8-5
No Scale

PRESTRESSING NOTES

270 ksi Low Relaxation Strand:
Pjack = 7500 kips
Anchor Set = 3/8 inch
Total Number of Girders = 3
Distribution of prestress force (Pjack) between girders shall not exceed the ratio of 3:2.
Maximum final force variation between girders shall not exceed 725 kips.
Concrete: f'_c = 6.0 ksi @ 28 days
f'_{ci} = 4.8 ksi @ time of stressing
Contractor shall submit elongation calculations based on initial stress at ⊠ = 0.9532 times jacking stress
Stressing shall be performed from Abut 1.
Design is based on friction curvature
Coefficient μ= 0.15 and friction
Wobble coefficient k= 0.0002/Ft

LEGEND

- 12 Indicates girder stem width in inches
- Indicates Closure Pour
- Indicates Existing Structure
- Indicates New Structure
- ⊠ Indicates Theoretical Point of No Movement

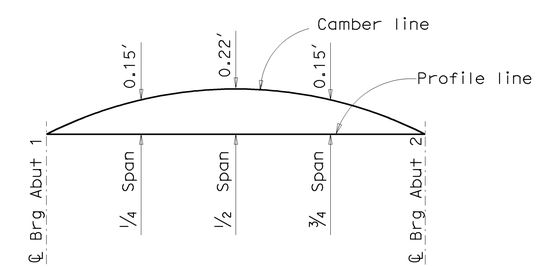

CAMBER DIAGRAGM
No Scale

NOTES

1. Camber does not include allowance for falsework settlement
2. When Falswork Released Alternative 2 is used, camber values are 0.75 times those shown.

NOTE:
THE CONTRACTOR SHALL VERIFY ALL CONTROLLING FIELD DIMENSIONS BEFORE ORDERING OR FABRICATING ANY MATERIAL.

DESIGN OVERSIGHT Jon Hanaguchi	DESIGN	BY M. Carbuccia	CHECKED K. Allam	PREPARED FOR THE STATE OF CALIFORNIA DEPARTMENT OF TRANSPORTATION	Alaedin Moubayed PROJECT ENGINEER
6-24-09 SIGN OFF DATE	DETAILS	BY I. Karkoutli	CHECKED K. Allam		
	QUANTITIES	BY L. Khaleghi	CHECKED V. Nong		

BRIDGE NO. 55-0457
POST MILE 16.8

CROWTHER AVENUE UC (WIDEN)
GIRDER LAYOUT

DESIGN DETAIL SHEET (ENGLISH) (REV. 2/25/05)
ORIGINAL SCALE IN INCHES FOR REDUCED PLANS 0 1 2 3
CU 12
EA 0F0311
DISREGARD PRINTS BEARING EARLIER REVISION DATES
REVISION DATES (PRELIMINARY STAGE ONLY)
SHEET 10 OF 22
FILE => 55-0457-l-g_lo01.dgn
USERNAME => trlenard DATE PLOTTED => 16-DEC-2009 TIME PLOTTED => 10:35

DIST	COUNTY	ROUTE	POST MILES TOTAL PROJECT	SHEET No	TOTAL SHEETS
12	Ora	57	16.2/18.6	834	960

REGISTERED CIVIL ENGINEER 6/15/09 DATE

12-14-09
PLANS APPROVAL DATE

REGISTERED PROFESSIONAL ENGINEER
Miguel Carbuccia
No. C70531
Exp. 12/31/10
CIVIL
STATE OF CALIFORNIA

The State of California or its officers or agents shall not be responsible for the accuracy or completeness of electronic copies of this plan sheet.

OCTA
550 S Main Street
Orange, CA 92868

PBS&J
625 The City Drive South, Suite 200
Orange, CA 92868

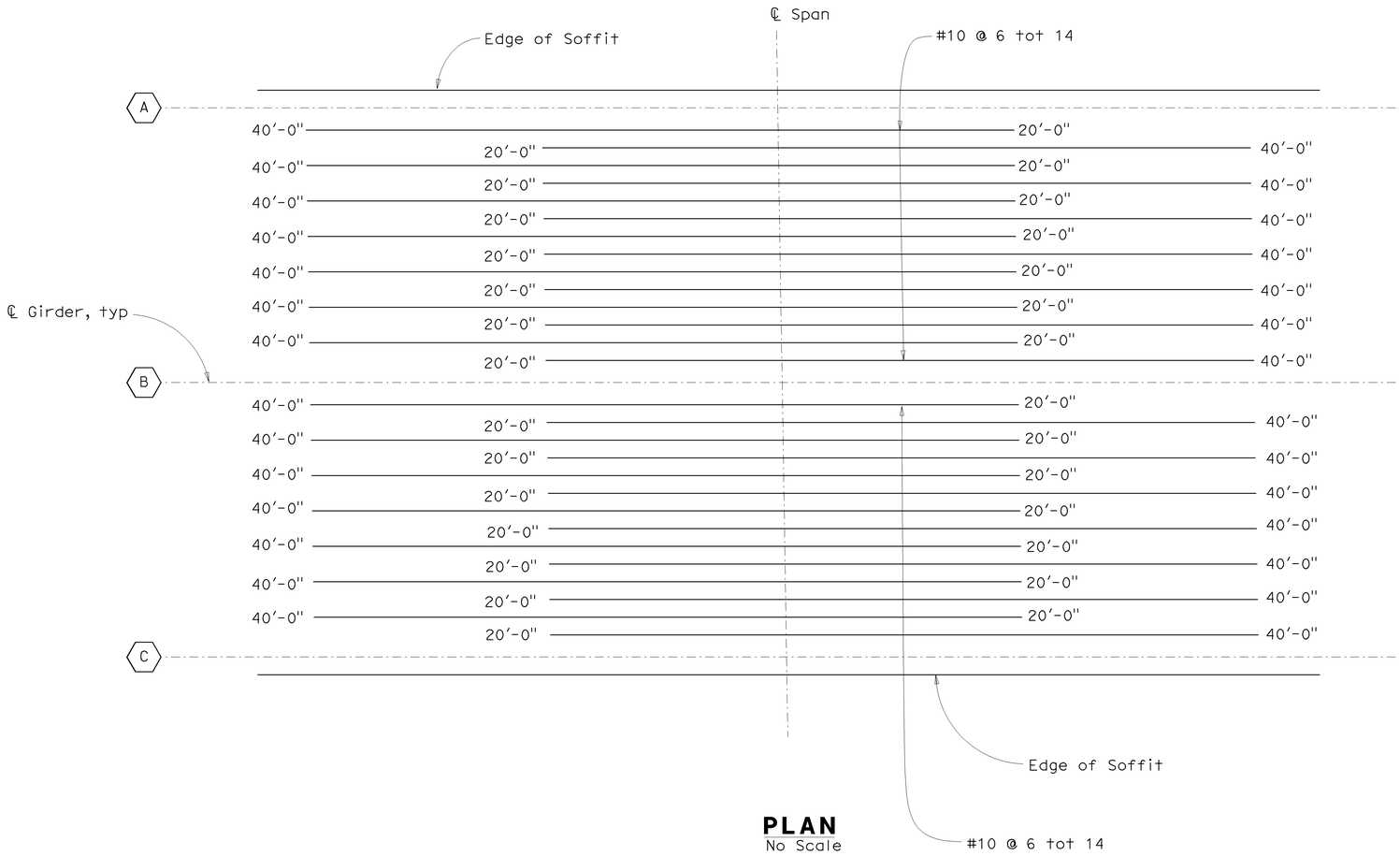

PLAN
No Scale

NOTES

No splice is allowed within the additional soffit Reinforcement

NOTE:
THE CONTRACTOR SHALL VERIFY ALL CONTROLLING FIELD DIMENSIONS BEFORE ORDERING OR FABRICATING ANY MATERIAL.

DESIGN OVERSIGHT Jon Hamaguchi
6-24-09
SIGN OFF DATE

	BY	CHECKED
DESIGN	M. Carbuccia	K. Allam
DETAILS	I. Karkoutli	K. Allam
QUANTITIES	L. Khaleghi	V. Nong

PREPARED FOR THE
STATE OF CALIFORNIA
DEPARTMENT OF TRANSPORTATION

Alaedin Moubayed
PROJECT ENGINEER

BRIDGE NO. 55-0457
POST MILE 16.8

CROWTHER AVENUE UC (WIDEN)
ADDITIONAL SOFFIT REINFORCEMENT

DESIGN DETAIL SHEET (ENGLISH) (REV. 2/25/05)

ORIGINAL SCALE IN INCHES FOR REDUCED PLANS 0 1 2 3

CU 12
EA 0F0311

DISREGARD PRINTS BEARING EARLIER REVISION DATES

REVISION DATES (PRELIMINARY STAGE ONLY)

SHEET 11 OF 22

FILE => 55-0457-1-o-gir-rf01.dgn

USERNAME => frlenard DATE PLOTTED => 16-DEC-2009 TIME PLOTTED => 10:35

DIST	COUNTY	ROUTE	POST MILES TOTAL PROJECT	SHEET No	TOTAL SHEETS
12	Ora	57	16.2/18.6	835	960

REGISTERED CIVIL ENGINEER 6/15/09 DATE

12-14-09
PLANS APPROVAL DATE

The State of California or its officers or agents shall not be responsible for the accuracy or completeness of electronic copies of this plan sheet.

REGISTERED PROFESSIONAL ENGINEER Miguel Carbuccia No. C70531 Exp. 12/31/10 CIVIL STATE OF CALIFORNIA

OCTA
550 S Main Street
Orange, CA 92868

PBS&J
625 The City Drive South, Suite 200
Orange, CA 92868

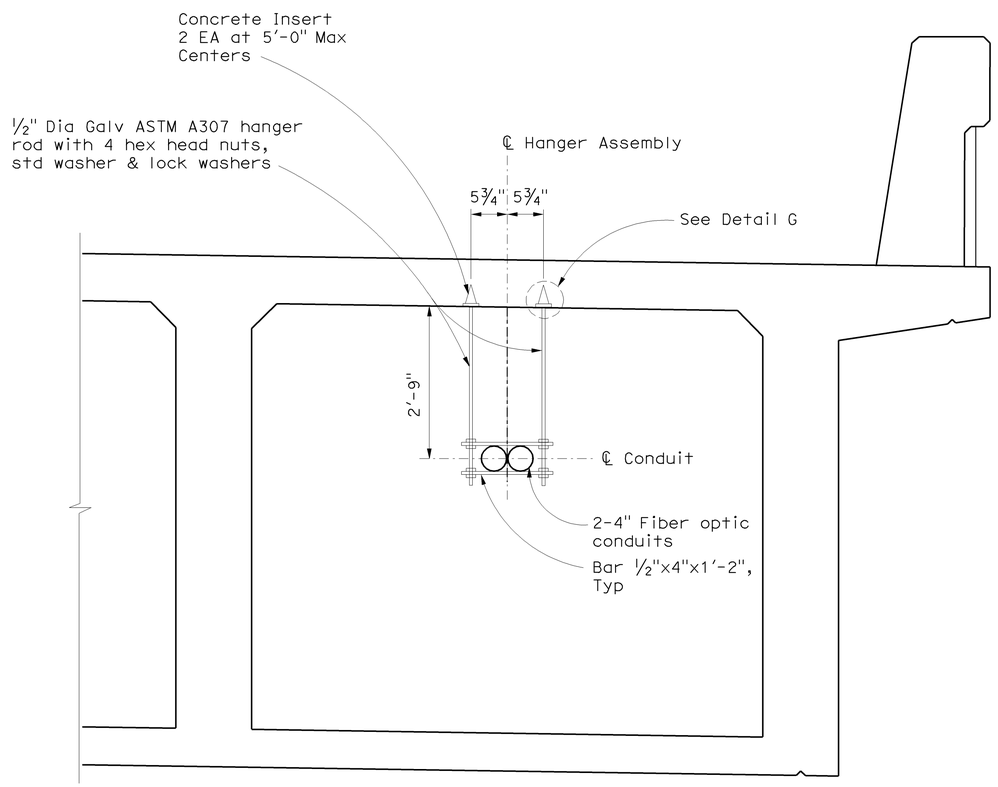

FIBER OPTIC CONDUIT HANGER SUPPORT DETAIL

No Scale

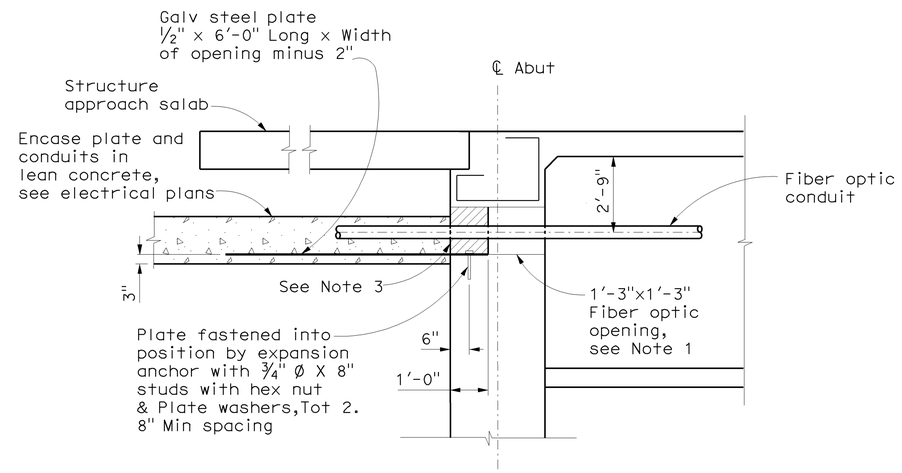

DETAIL AT ABUTMENT OPENING FOR FIBER OPTIC CONDUITS

No Scale

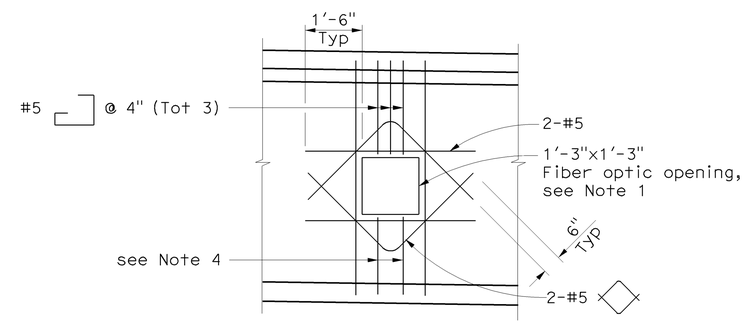

ABUTMENT DIAPHRAGM

FIBER OPTIC CONDUIT OPENING DETAIL

No Scale

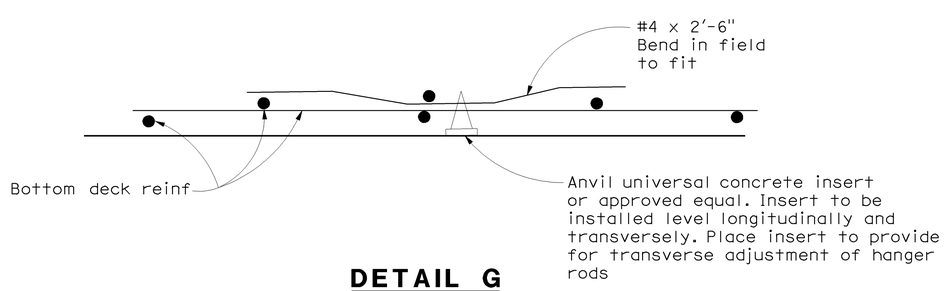

DETAIL G

No Scale

NOTES

1. The exact location, elevation,size and direction of Fiber optic openings, see "Abutment 1 Layout" "Abutment 2 Layout" and "Typical Section sheets.
2. All reinforcement detailed to be placed in addition to reinforcement shown on project plans.
3. Seal conduits at abutments with concrete or mortar, after tightly wrapping utility with 2 layers of 15 LBS building paper.
4. Reinforcement to be same bar size, and 2/3 the spacing of adjacent reiforcement shown on project plans.
5. Reinforcement to be same bar size and shape as adjacent reiforcement shown on project plans.
6. When there is insufficient space to place reinforcement as shown, hook reinforcement into exterior girder.

NOTE:
THE CONTRACTOR SHALL VERIFY ALL CONTROLLING FIELD DIMENSIONS BEFORE ORDERING OR FABRICATING ANY MATERIAL.

DESIGN OVERSIGHT Jon Hamaguchi
6-24-09
SIGN OFF DATE

	BY	CHECKED
DESIGN	M. Carbuccia	K. Allam
DETAILS	I. Karkoutli	K. Allam
QUANTITIES	L. Khaleghi	V. Nong

PREPARED FOR THE STATE OF CALIFORNIA DEPARTMENT OF TRANSPORTATION

Alaedin Moubayed
PROJECT ENGINEER

BRIDGE NO. 55-0457
POST MILE 16.8

CROWTHER AVENUE UC (WIDEN)
FIBER OPTIC CONDUITS DETAILS

DESIGN DETAIL SHEET (ENGLISH) (REV. 2/25/05)

ORIGINAL SCALE IN INCHES FOR REDUCED PLANS 0 1 2 3

CU 12
EA 0F0311

DISREGARD PRINTS BEARING EARLIER REVISION DATES

REVISION DATES (PRELIMINARY STAGE ONLY)

SHEET 12 OF 22

FILE => 55-0457-u-miscdt01.dgn

USERNAME => rtrienard DATE PLOTTED => 16-DEC-2009 TIME PLOTTED => 10:35

DIST.	COUNTY	ROUTE	KILOMETER POST TOTAL PROJECT	SHEET NO.	TOTAL SHEETS
12	Ora	57	16.2/18.6	836	960

REGISTERED ENGINEER - CIVIL

12-14-09

PLANS APPROVAL DATE

REGISTERED PROFESSIONAL ENGINEER Miguel Carbuccia No. C70531 Exp. 12/31/10 CIVIL STATE OF CALIFORNIA

The State of California or its officers or agents shall not be responsible for the accuracy or completeness of electronic copies of this plan sheet.

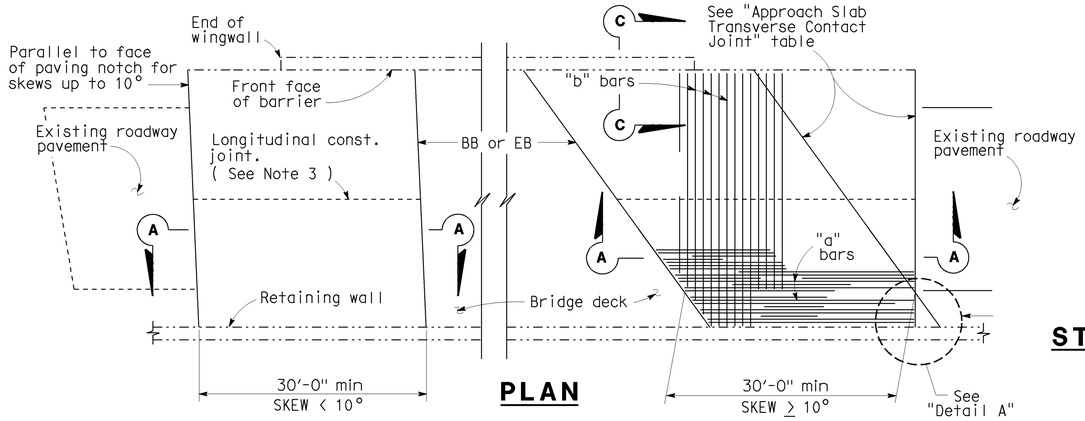

PLAN

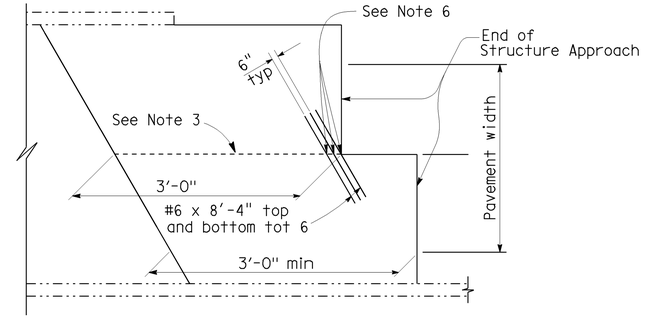

STRUCTURE APPROACH - END STAGGER DETAIL

APPROACH SLAB TRANSVERSE CONTACT JOINT		
APPROACH SKEW	WITH AC ROADWAY PAVEMENT	WITH PCC ROADWAY PAVEMENT
< 10°	Parallel to face of paving notch	Parallel to face of paving notch
10°- 45°	Parallel to face of P N use (Detail A)	Stagger lines 24' to 36' apart
> 45°	Parallel to face of P N use (Detail A)	Stagger at each lane line

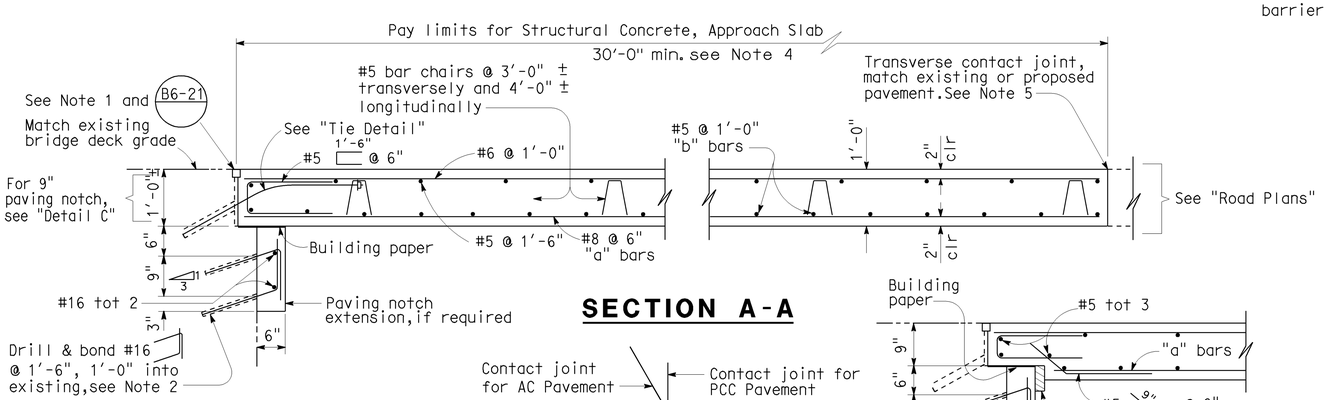

SECTION A-A

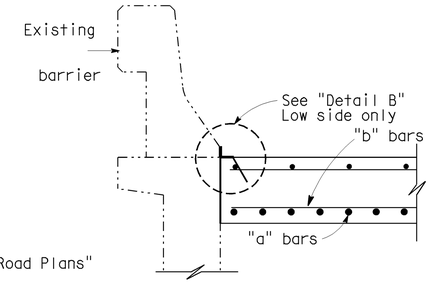

SECTION C-C

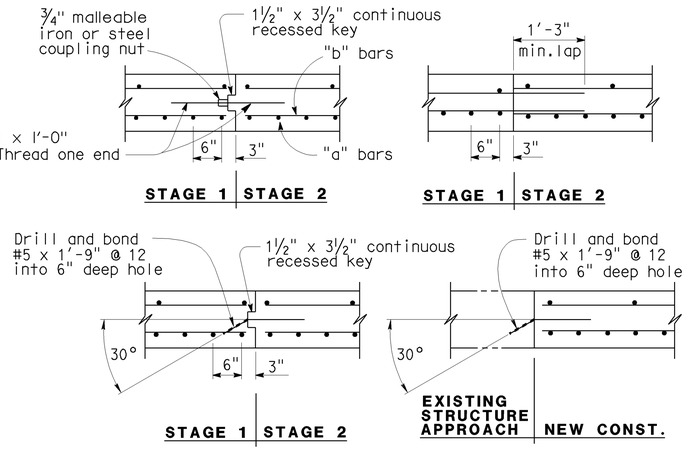

LONGITUDINAL CONSTRUCTION JOINT ALTERNATIVES

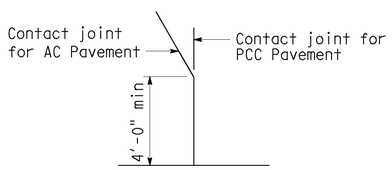

DETAIL A

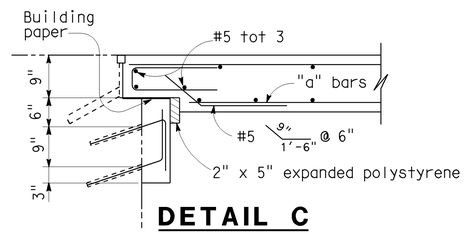

DETAIL C

NOTE: For details not shown, see "Section A-A".

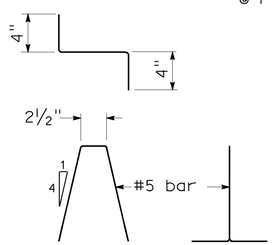

BAR CHAIR DETAIL

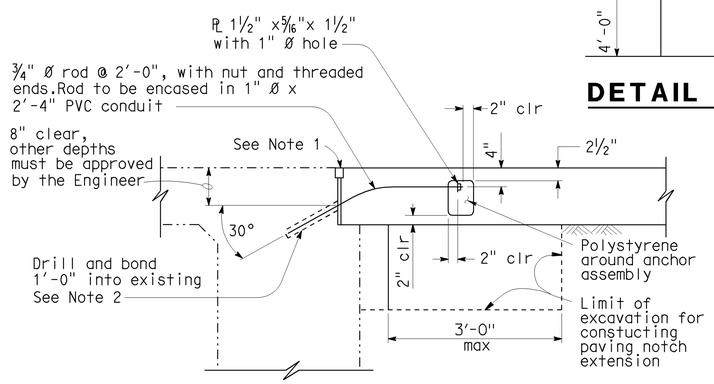

TIE DETAIL

NOTE:
THE CONTRACTOR SHALL VERIFY ALL CONTROLLING FIELD DIMENSIONS BEFORE ORDERING OR FABRICATING ANY MATERIAL.

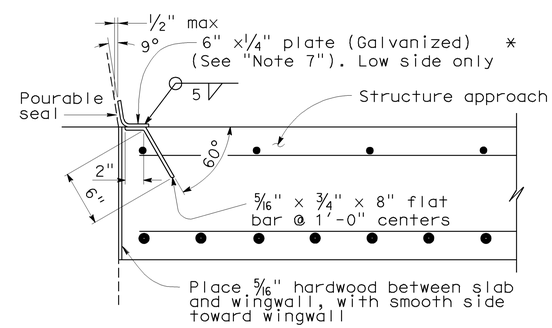

*(TO BE USED WITH TYPE 732 OR TYPE 736 CONCRETE BARRIER)

DETAIL B

NOTES:

1. For details not shown or noted, see Structure Plans. Adjust bar reinforcement to clear a sawcut for sealed joint, when required.
2. Space to avoid existing prestress anchorages and main reinforcement.
3. Longitudinal construction joints, when permitted by the Engineer, shall be located on lane lines.
4. Transverse contact joint shall be a minimum of 5'-0" from an existing or constructed weakened plane joint.
5. For transverse contact joint with new PCC paving. refer to Standard Plan P10.
6. Couplers are required for stage construction.
7. End angle or plate at beginning of barrier transition, end of wingwall or end of structure approach as applicable.

NO SCALE

STANDARD DRAWING					
RELEASE DATE 3/14/05	DESIGN	BY M. TRAFFALIS	CHECKED E. THORKILDSEN	RELEASED BY	
FILE NO. xs3-140	DETAILS	BY R. YEE	CHECKED E. THORKILDSEN		
	SUBMITTED	BY M. HA	DRAWING DATE 8/92	OFFICE CHIEF	

1 Deleted Details

STATE OF CALIFORNIA
DEPARTMENT OF TRANSPORTATION

DIVISION OF ENGINEERING SERVICES

CU 12
EA 0F0311

BRIDGE NO. 55-0450
KILOMETER POST 16.7

CROWTHER AVENUE UC (WIDEN)
STRUCTURE APPROACH TYPE R(30D)

DS OSD 2147A (METRIC) (REV. 2/25/97)

ORIGINAL SCALE IN MILLIMETERS FOR REDUCED PLANS 0 10 20 30 40 50 60 70 80 90 100

DISREGARD PRINTS BEARING EARLIER REVISION DATES

REVISION DATES (PRELIMINARY STAGE ONLY)

SHEET 13 OF 22

USERNAME => trlenard

DATE PLOTTED => 16-DEC-2009 TIME PLOTTED => 10:35

55-0457-s-sap01.dg

RELEASED 11-10-97

DIST.	COUNTY	ROUTE	POST MILES TOTAL PROJECT	SHEET NO.	TOTAL SHEETS
12	Ora	57	16.2/18.6	837	960

REGISTERED ENGINEER - CIVIL

REGISTERED PROFESSIONAL ENGINEER Miguel Carbuccia No. C70531 Exp. 12/31/10 CIVIL STATE OF CALIFORNIA

12-14-09
PLANS APPROVAL DATE

The State of California or its officers or agents shall not be responsible for the accuracy or completeness of electronic copies of this plan sheet.

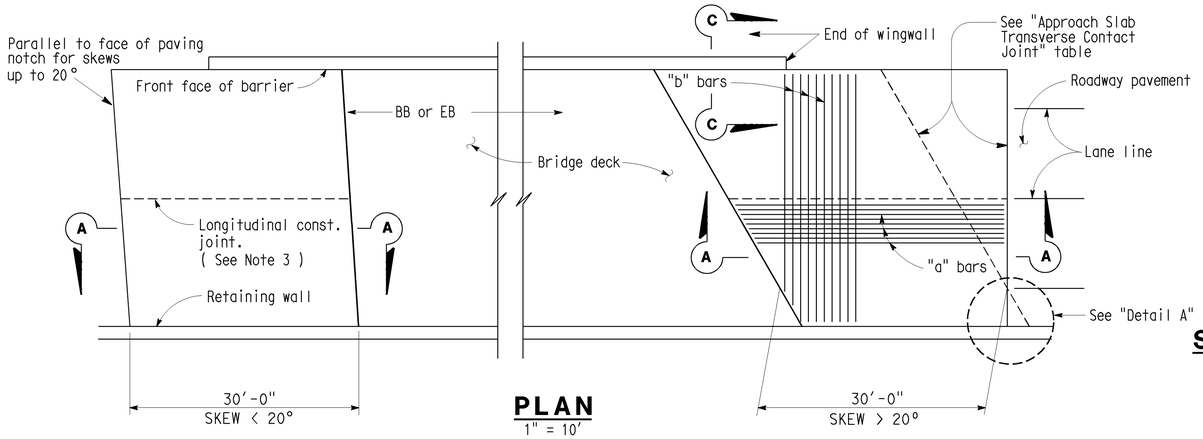

PLAN
1" = 10'

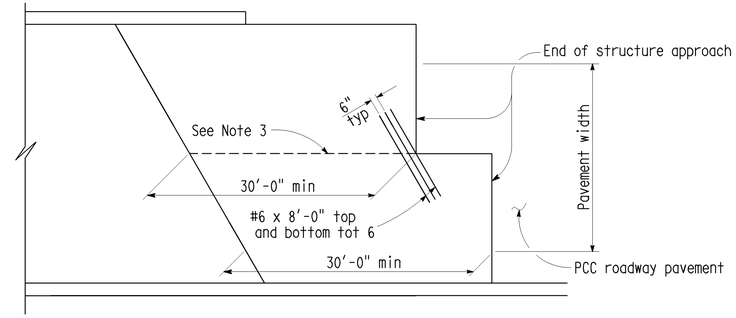

STRUCTURE APPROACH - END STAGGER DETAIL
No Scale

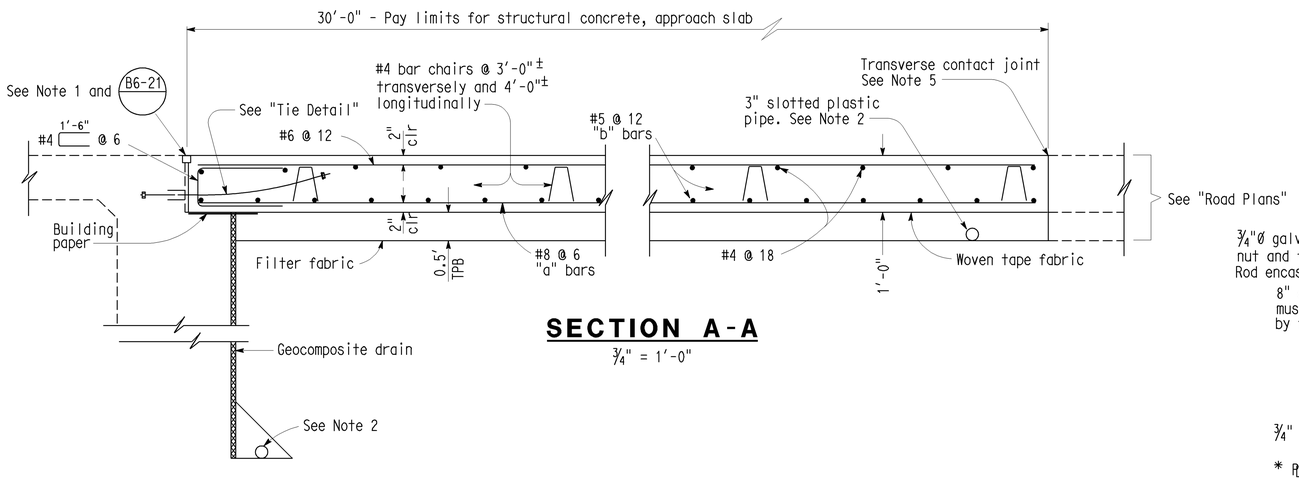

SECTION A-A
¾" = 1'-0"

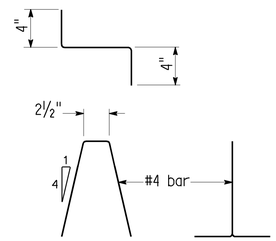

BAR CHAIR DETAIL
1½" = 1'-0"

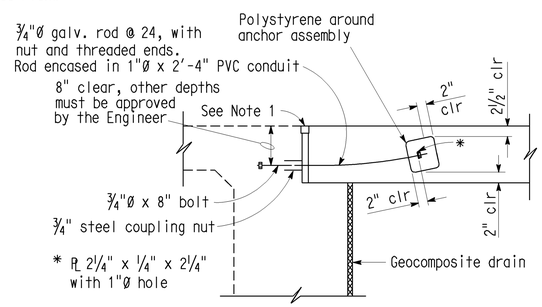

TIE DETAIL
¾" = 1'-0"

APPROACH SLAB TRANSVERSE CONTACT JOINT		
APPROACH SKEW	WITH AC ROADWAY PAVEMENT	WITH PCC ROADWAY PAVEMENT
< 20°	Parallel to face of paving notch	Parallel to face of paving notch
20° - 45°	Parallel to face of P N use (Detail A)	Stagger lines 24' to 36' apart
> 45°	Parallel to face of P N use (Detail A)	Stagger at each lane line

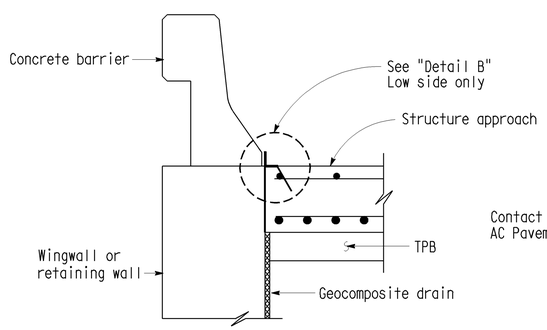

TYPE E-2

SECTION C-C
¾" = 1'-0"
~~(Type E-1 to be used, unless otherwise shown on plans)~~

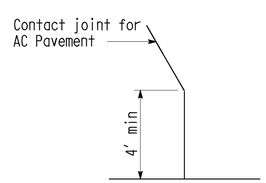

DETAIL A
No Scale

NOTES:

1. For details not noted or shown, see Structure Plans.
2. For drainage details, see "Structure Approach Drainage Details" sheet.
3. Longitudinal construction joints, when permitted by the Engineer, shall be located on lane lines.
4. ◇2
5. For transverse contact joint with new PCC paving, refer to Standard Plan A35-A.
6. At the contractor's option, approach slab transverse reinforcement may be placed parallel to paving notch. Spacing of transverse reinforcement is measured along ℄ roadway.

Polystyrene to be removed.

◇1 Delete Detail
◇2 Deletes Note 4

STANDARD DRAWING

FILE NO. XS 22-24	DESIGN	BY M. TRAFFALIS	CHECKED E. THORKILDSEN	APPROVAL RECOMMENDED BY
DESIGN DATE 8/92	DETAILS	BY R. YEE	CHECKED E. THORKILDSEN	DESIGN SUPERVISOR
	SUBMITTED BY M. HA			

STATE OF CALIFORNIA
DEPARTMENT OF TRANSPORTATION

DIVISION OF STRUCTURES
STRUCTURE DESIGN

BRIDGE NO. 55-0457
POST MILE 16.8

CROWTHER AVENUE UC (WIDEN)
STRUCTURE APPROACH TYPE N(30D)

DS OSD 2147A (CADD 7/97)

ORIGINAL SCALE IN INCHES FOR REDUCED PLANS 0 1 2 3

CU 12
EA OF 0311

DISREGARD PRINTS BEARING EARLIER REVISION DATES

REVISION DATES (PRELIMINARY STAGE ONLY)

SHEET 14 OF 22

XS2224.DGN VI=1

DIST.	COUNTY	ROUTE	KILOMETER POST TOTAL PROJECT	SHEET NO.	TOTAL SHEETS
12	Ora	57	16.2/18.6	838	960

REGISTERED ENGINEER - CIVIL

12-14-09

PLANS APPROVAL DATE

REGISTERED PROFESSIONAL ENGINEER Miguel Carbuccia No. C70531 Exp. 12/31/10 CIVIL STATE OF CALIFORNIA

The State of California or its officers or agents shall not be responsible for the accuracy or completeness of electronic copies of this plan sheet.

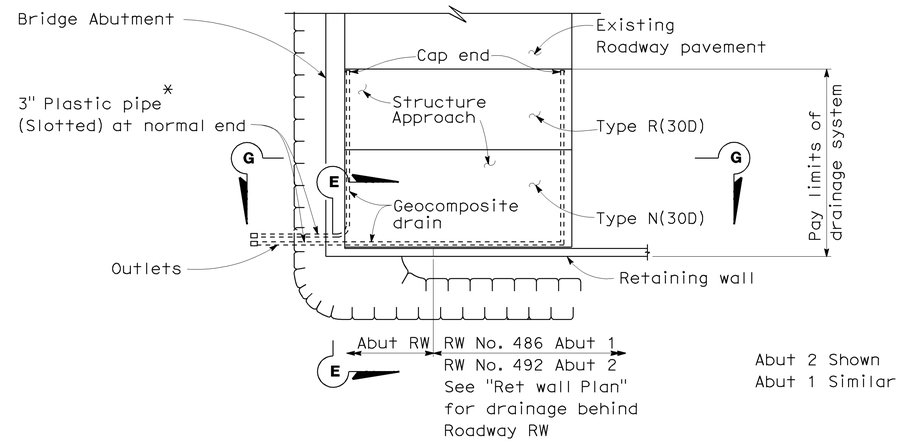

TYPICAL PLAN

* For pipe layout at staggered end,see "Detail B".

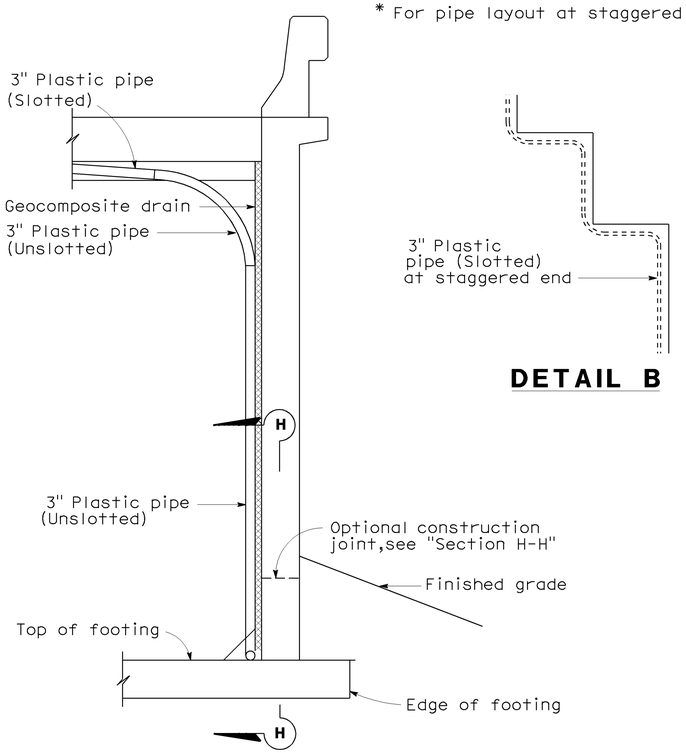

SECTION E-E

NOTE: Bends and junctions in 3" plastic pipe are 2'-6" radius min.

DETAIL B

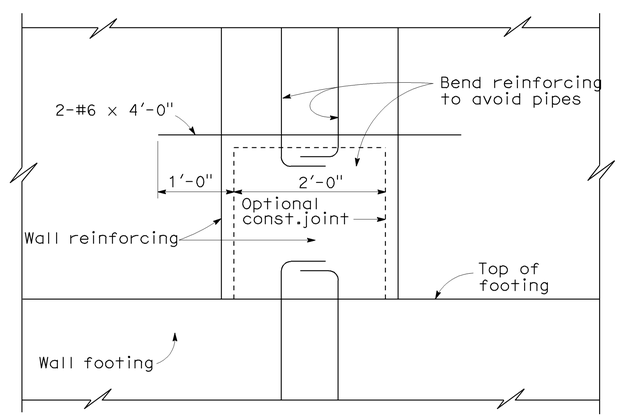

SECTION H-H

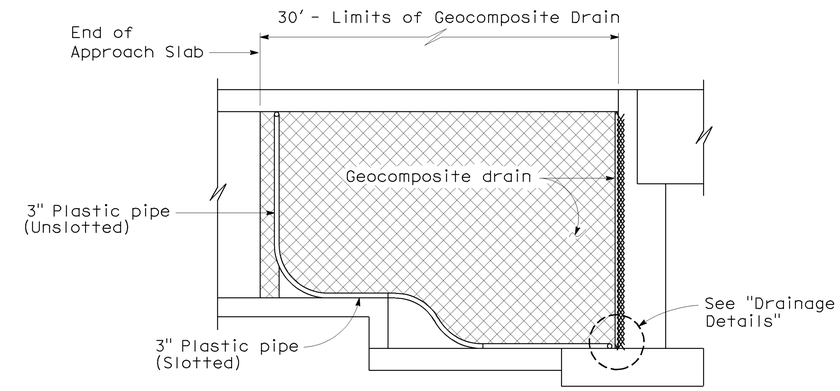

RETAINING WALL WINGWALL
SECTION G-G

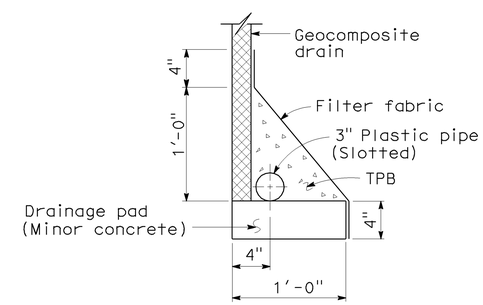

WITHOUT FOOTING

DRAINAGE DETAILS

SPECIAL DETAILS

STANDARD DRAWING					
RELEASE DATE Revised	DESIGN	BY M. TRAFFALIS	CHECKED E. THORKILDSEN	RELEASED BY	
FILE NO. xs3-110	DETAILS	BY R. YEE	CHECKED E. THORKILDSEN		
	SUBMITTED	BY M. HA	DRAWING DATE 4/98	OFFICE CHIEF	

DS OSD 2147A (METRIC) (REV. 2/25/97)

1 Deleted Details
2 Revise Section "E-E", Typical Plan

STATE OF CALIFORNIA DEPARTMENT OF TRANSPORTATION

DIVISION OF ENGINEERING SERVICES

BRIDGE NO. 55-0457

KILOMETER POST 16.8

CROWTHER AVENUE UC (WIDEN)

STRUCTURE APPROACH DRAINAGE DETAILS

ORIGINAL SCALE IN MILLIMETERS FOR REDUCED PLANS 0 10 20 30 40 50 60 70 80 90 100

CU 12
EA OF 0311

DISREGARD PRINTS BEARING EARLIER REVISION DATES

REVISION DATES (PRELIMINARY STAGE ONLY) 09/17/08

SHEET 15 OF 22

FILE => 55-0457-s-sadd.dgn

DATE PLOTTED => 16-DEC-2009 TIME PLOTTED => 10:35

55-0457-s-sadd.dgn

DIST	COUNTY	ROUTE	POST MILES TOTAL PROJECT	SHEET No	TOTAL SHEETS
12	Ora	57	16.2/18.6	839	960

REGISTERED CIVIL ENGINEER 6/15/09 DATE

12-14-09
PLANS APPROVAL DATE

The State of California or its officers or agents shall not be responsible for the accuracy or completeness of electronic copies of this plan sheet.

REGISTERED PROFESSIONAL ENGINEER Miguel Carbuccia No. C70531 Exp. 12/31/10 CIVIL STATE OF CALIFORNIA

OCTA
550 S Main Street
Orange, CA 92868

PBS&J
625 The City Drive South, Suite 200
Orange, CA 92868

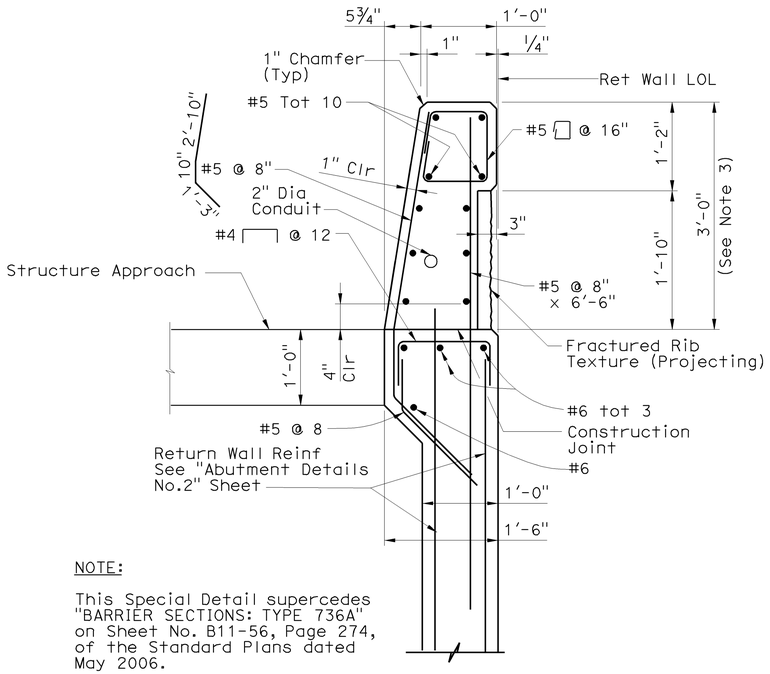

NOTE:

This Special Detail supercedes "BARRIER SECTIONS: TYPE 736A" on Sheet No. B11-56, Page 274, of the Standard Plans dated May 2006.

BARRIER TYPE 736A (MODIFIED) ON RETURNWALL

1" = 1'-0"

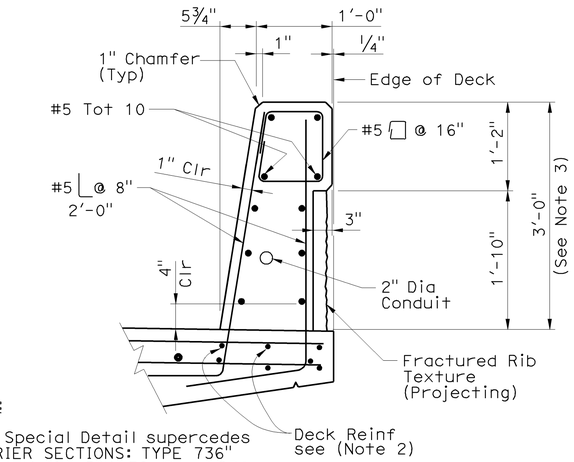

NOTE:

This Special Detail supercedes "BARRIER SECTIONS: TYPE 736" on Sheet No. B11-56, Page 274, of the Standard Plans dated May 2006.

BARRIER TYPE 736 (MODIFIED) ON BRIDGE DECK

1" = 1'-0"

NOTES

1. For Conc deck overhang Reinf See "Typical Section" sheet.
2. Dimension may vary with roadway cross slope, and with certain thickness of surfacing.
3. Longitudinal Reinf to stop at all Exp Joints.

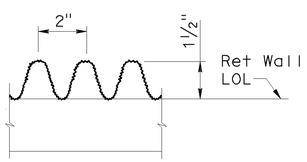

FRACTURED RIB TEXTURE (PROJECTING)

No Scale

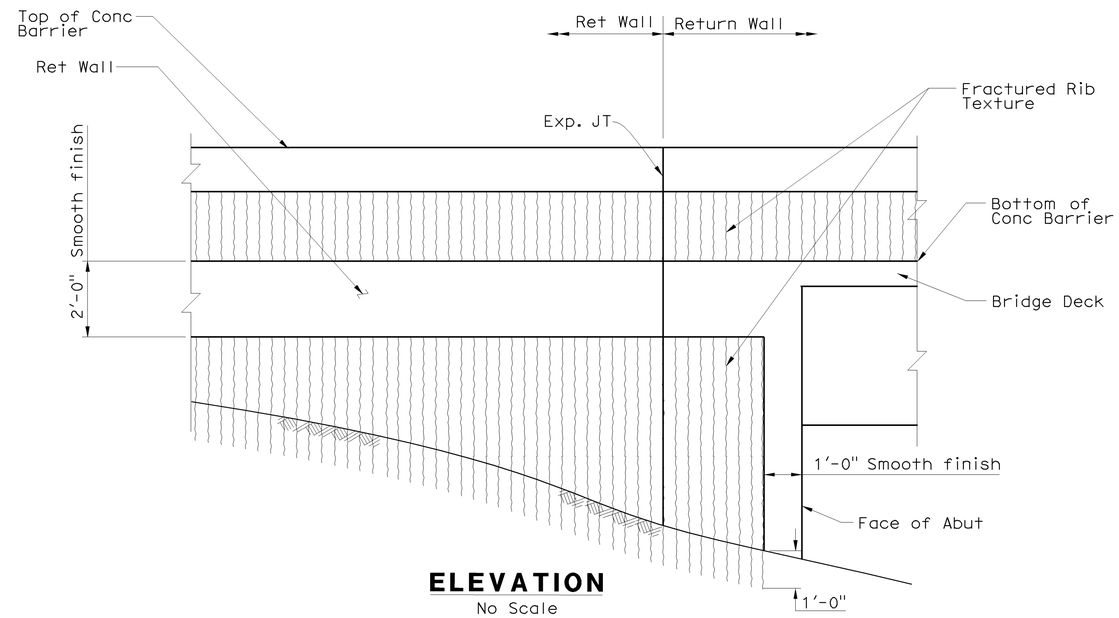

ELEVATION

No Scale

NOTE:
THE CONTRACTOR SHALL VERIFY ALL CONTROLLING FIELD DIMENSIONS BEFORE ORDERING OR FABRICATING ANY MATERIAL.

DESIGN OVERSIGHT
6-24-09
SIGN OFF DATE

	BY	CHECKED
DESIGN	M. Carbuccia	K. Allam
DETAILS	I. Karkoutli	K. Allam
QUANTITIES	L. Khaleghi	V. Nong

PREPARED FOR THE STATE OF CALIFORNIA DEPARTMENT OF TRANSPORTATION

Alaedin Moubayed
PROJECT ENGINEER

BRIDGE NO. 55-0457
POST MILE 16.8

CROWTHER AVENUE UC (WIDEN)
CONCRETE BARRIER TYPE 736 (MOD)

DESIGN DETAIL SHEET (ENGLISH) (REV. 2/25/05)

ORIGINAL SCALE IN INCHES FOR REDUCED PLANS 0 1 2 3

CU 12
EA 0F0311

DISREGARD PRINTS BEARING EARLIER REVISION DATES

REVISION DATES (PRELIMINARY STAGE ONLY)

SHEET 16 OF 22

FILE => 55-0457-t-brdt.dgn

USERNAME => trlenard DATE PLOTTED => 16-DEC-2009 TIME PLOTTED => 10:36

DIST.	COUNTY	ROUTE	KILOMETER POST TOTAL PROJECT	SHEET NO.	TOTAL SHEETS
12	Ora	57	16.2/18.6	840	960

REGISTERED ENGINEER - CIVIL

12-14-09

PLANS APPROVAL DATE

REGISTERED PROFESSIONAL ENGINEER Miguel Carbuccia No. C70531 Exp. 12/31/10 CIVIL STATE OF CALIFORNIA

The State of California or its officers or agents shall not be responsible for the accuracy or completeness of electronic copies of this plan sheet.

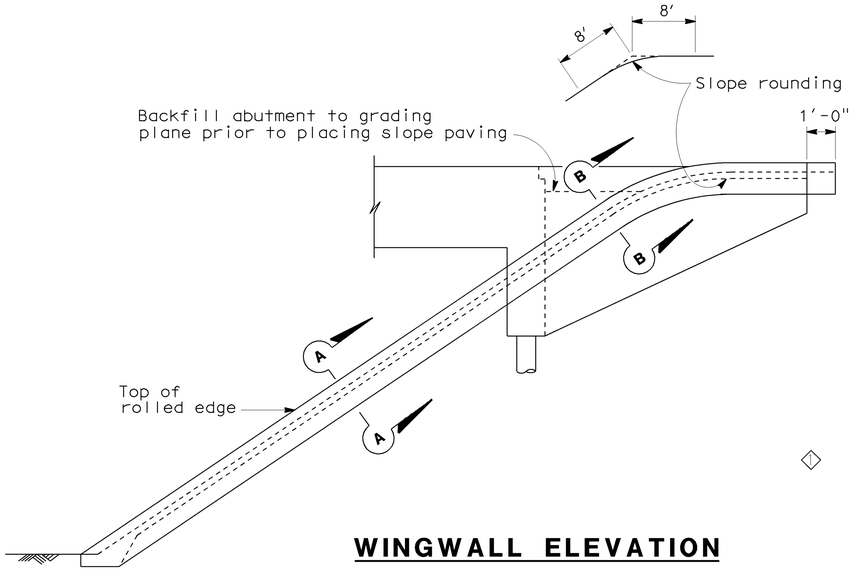

WINGWALL ELEVATION

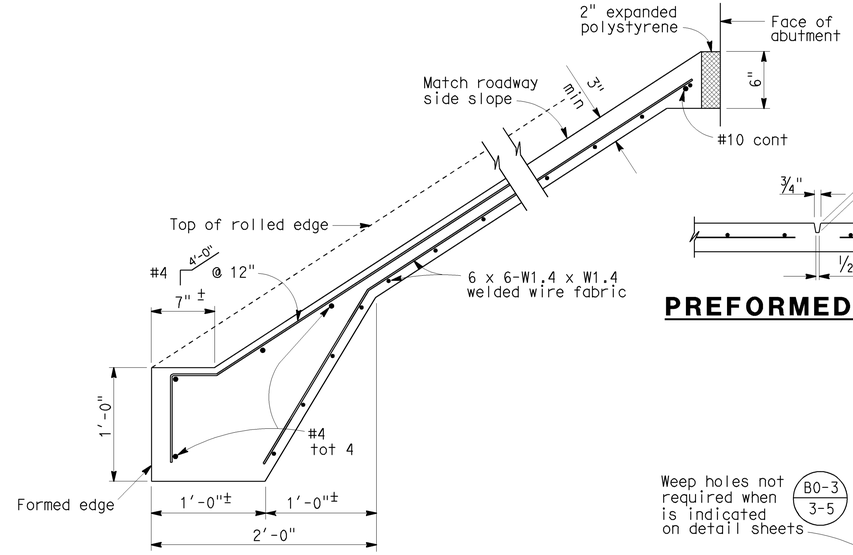

TYPICAL SECTION - CONCRETE PAVING

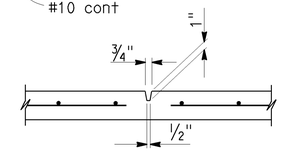

PREFORMED GROOVE

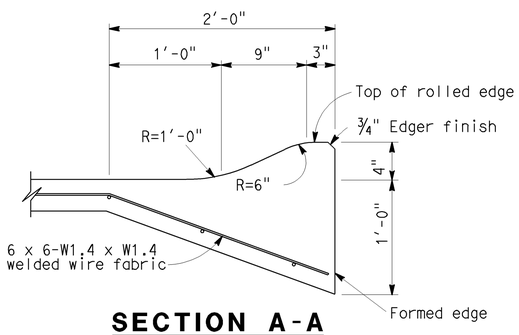

SECTION A-A

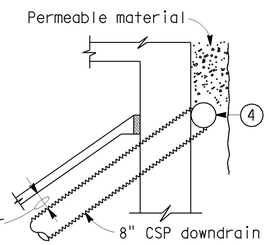

TYPICAL - DRAIN CONNECTION

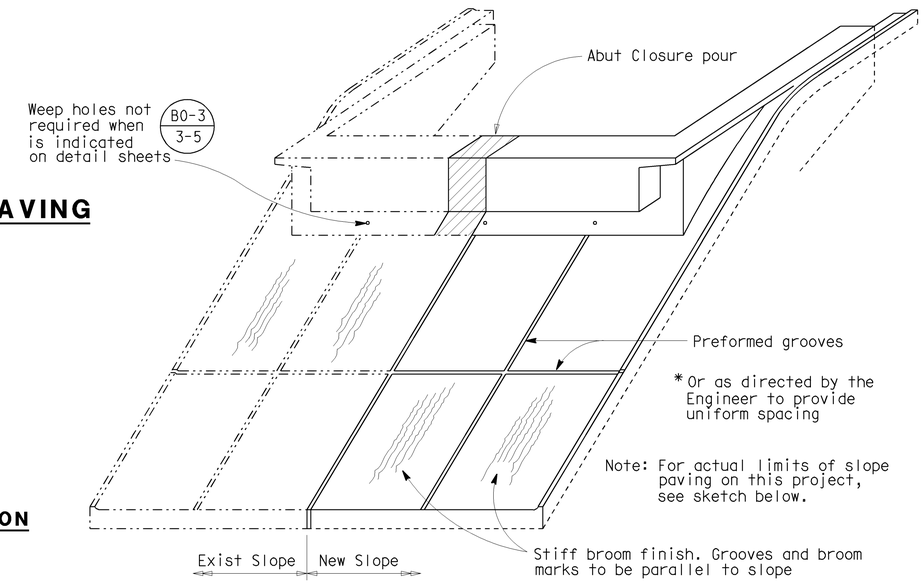

PICTORIAL VIEW OF TYPICAL INSTALLATION

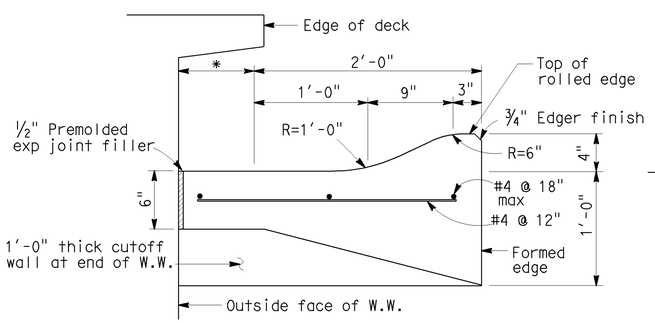

SECTION B-B

* This dimension becomes zero when edge of deck is at outside face of W.W.

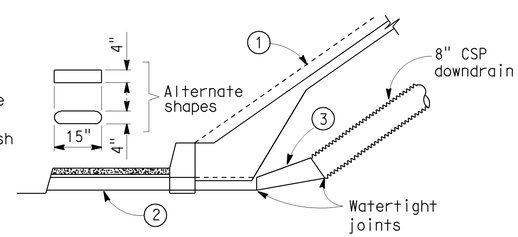

TYPICAL - WITH SIDEWALK

DRAINAGE DETAILS

Note: Drainage details are only applicable when B0-3/3-5 is indicated on detail sheets.

1. Top of rolled edge
2. Conduit: 1/16" galv corrugated steel or 0.109" smooth galv steel
3. Taper: { 1/16" / 0.109" smooth galv steel
4. 8" perforated steel pipe (1/16" thick) underdrain behind abutment. Connect to downdrain as shown on limits of Slope Paving & Drainage layout.

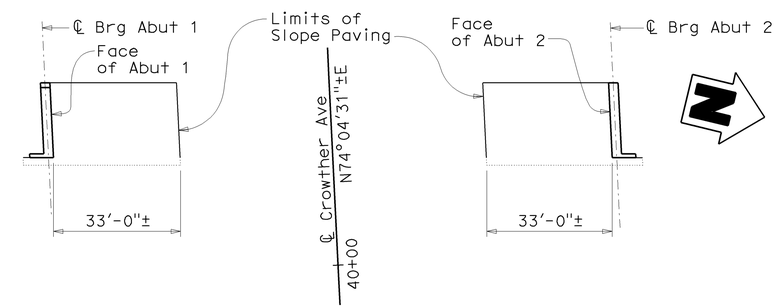

LIMITS OF SLOPE PAVING & DRAINAGE LAYOUT

STANDARD DRAWING					
RELEASE DATE Revised	DESIGN	BY M. TRAFFALIS	CHECKED E. THORKILDSEN	RELEASED BY	
FILE NO. xs3-110	DETAILS	BY R. YEE	CHECKED E. THORKILDSEN		
	SUBMITTED	BY M. HA	DRAWING DATE 4/98	OFFICE CHIEF	

1 Deleted Details

STATE OF CALIFORNIA DEPARTMENT OF TRANSPORTATION

DIVISION OF ENGINEERING SERVICES

BRIDGE NO. 55-0457

KILOMETER POST 16.8

CROWTHER AVENUE UC (WIDEN)

SLOPE PAVING

DS OSD 2147A (METRIC) (REV. 2/25/97)

ORIGINAL SCALE IN MILLIMETERS FOR REDUCED PLANS 0 10 20 30 40 50 60 70 80 90 100

CU 12 EA OF 0311

DISREGARD PRINTS BEARING EARLIER REVISION DATES

REVISION DATES (PRELIMINARY STAGE ONLY) 09/17/08

SHEET 17 OF 22

FILE => 55-0457-w-slp.dgn

TIME PLOTTED => 10:36

DATE PLOTTED => 16-DEC-2009

55-0457-w-slp.dgn

DIST	COUNTY	ROUTE	POST MILES TOTAL PROJECT	SHEET No	TOTAL SHEETS
12	Ora	57	16.2/18.6	841	960

REGISTERED ENGINEER Lino Cheang DATE 6/15/09

12-14-09
PLANS APPROVAL DATE

REGISTERED PROFESSIONAL ENGINEER L. CHEANG NO. GE 2345 EXP. 9-30-09 GEOTECHNICAL STATE OF CALIFORNIA

The State of California or its officers or agents shall not be responsible for the accuracy or completeness of electronic copies of this plan sheet.

ORANGE COUNTY TRANSPORTATION AUTHORITY
550 S. MAIN STREET
ORANGE, CA 92863-1584

EARTH MECHANICS, INC.
17660 NEWHOPE STREET, SUITE E
FOUNTAIN VALLEY, CA 92708

REFERENCE: CALTRANS SOIL & ROCK LOGGING, CLASSIFICATION, AND PRESENTATION MANUAL (JUNE 2007)

CEMENTATION

Description	Criteria
Weak	Crumbles or breaks with handling or little finger pressure.
Moderate	Crumbles or breaks with considerable finger pressure.
Strong	Will not crumble or break with finger pressure.

CONSISTENCY OF COHESIVE SOILS

Description	Unconfined Compressive Strength (tsf)	Pocket Penetrometer Measurement (tsf)	Torvane Measurement (tsf)	Field Approximation
Very Soft	< 0.25	< 0.25	< 0.12	Easily penetrated several inches by fist
Soft	0.25 to 0.50	0.25 to 0.50	0.12 to 0.25	Easily penetrated several inches by thumb
Medium Stiff	0.50 to 1.0	0.50 to 1.0	0.25 to 0.50	Penetrated several inches by thumb with moderate effort
Stiff	1 to 2	1 to 2	0.50 to 1.0	Readily indented by thumb but penetrated only with great effort
Very Stiff	2 to 4	2 to 4	1.0 to 2.0	Readily indented by thumbnail
Hard	> 4.0	> 4.0	> 2.0	Indented by thumbnail with difficulty

BOREHOLE IDENTIFICATION

Symbol	Hole Type	Description
Size	A	Auger Boring
Size	R P	Rotary drilled boring Rotary percussion boring (air)
Size	R	Rotary drilled diamond core
Size	HD HA	Hand driven (1-inch soil tube) Hand Auger
●	D	Dynamic Cone Penetration Boring
▲	CPT	Cone Penetration Test (ASTM D 5778-95)
⬚	O	Other

Note: Size in inches.

PLASTICITY OF FINE-GRAINED SOILS

Description	Criteria
Nonplastic	A 1/8-inch thread cannot be rolled at any water content.
Low	The thread can barely be rolled and the lump cannot be formed when drier than the plastic limit.
Medium	The thread is easy to roll and not much time is required to reach the plastic limit. The thread cannot be rerolled after reaching the plastic limit. The lump crumbles when drier than the plastic limit.
High	It takes considerable time rolling and kneading to reach the plastic limit. The thread can be rerolled several times after reaching the plastic limit. The lump can be formed without crumbling when drier than the plastic limit.

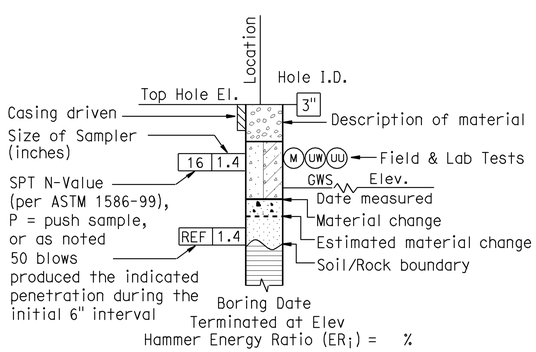

ROTARY BORING

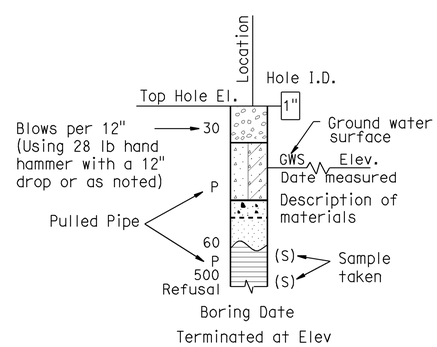

HAND BORING

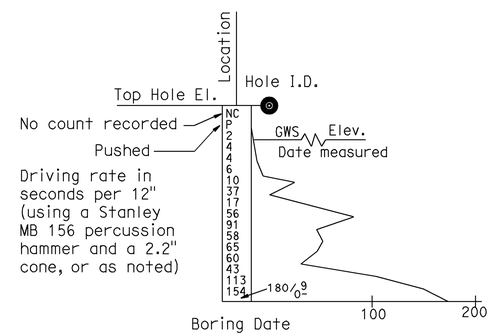

DYNAMIC CONE PENETRATION BORING

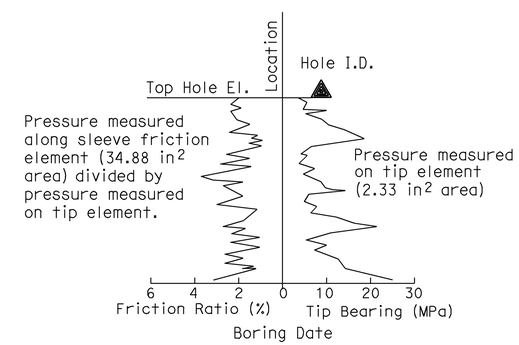

CONE PENETRATION TEST (CPT) SOUNDING

DESIGN OVERSIGHT Jon Hamaguchi
6-24-09
SIGN OFF DATE

DRAWN BY: J.Fang
CHECKED BY: L.Cheang

FIELD INVESTIGATION BY:
R.Jie

PREPARED FOR THE STATE OF CALIFORNIA DEPARTMENT OF TRANSPORTATION

L.Cheang
PROJECT ENGINEER

BRIDGE NO. 55-0457
POST MILES 16.8

CROWTHER AVENUE UC (WIDEN)
LOG OF TEST BORINGS 1 OF 3

DESIGN GENERAL PLAN SHEET (ENGLISH) (REV. 2/25/05)

ORIGINAL SCALE IN INCHES FOR REDUCED PLANS 0 1 2 3

CU 12
EA 0F0311

DISREGARD PRINTS BEARING EARLIER REVISION DATES

REVISION DATES (PRELIMINARY STAGE ONLY)

SHEET 18 OF 22

FILE => 55-0457-z-1tb01.dgn

USERNAME => rtrienard DATE PLOTTED => 16-DEC-2009 TIME PLOTTED => 12:45

REFERENCE: CALTRANS SOIL & ROCK LOGGING, CLASSIFICATION, AND PRESENTATION MANUAL (JUNE 2007)

DIST	COUNTY	ROUTE	POST MILES TOTAL PROJECT	SHEET No	TOTAL SHEETS
12	Ora	57	16.2/18.6	842	960

Lino Cheang 6/15/09
REGISTERED ENGINEER DATE

12-14-09
PLANS APPROVAL DATE

REGISTERED PROFESSIONAL ENGINEER L. CHEANG NO. GE 2345 EXP. 9-30-09 GEOTECHNICAL STATE OF CALIFORNIA

The State of California or its officers or agents shall not be responsible for the accuracy or completeness of electronic copies of this plan sheet.

ORANGE COUNTY TRANSPORTATION AUTHORITY
550 S. MAIN STREET
ORANGE, CA 92863-1584

EARTH MECHANICS, INC.
17660 NEWHOPE STREET, SUITE E
FOUNTAIN VALLEY, CA 92708

GROUP SYMBOLS AND NAMES

Graphic/Symbol	Group Names	Graphic/Symbol	Group Names
GW	Well-graded GRAVEL Well-graded GRAVEL with SAND	CL	Lean CLAY Lean CLAY with SAND Lean CLAY with GRAVEL SANDY lean CLAY SANDY lean CLAY with GRAVEL GRAVELLY lean CLAY GRAVELLY lean CLAY with SAND
GP	Poorly graded GRAVEL Poorly graded GRAVEL with SAND		
GW-GM	Well-graded GRAVEL with SILT Well-graded GRAVEL with SILT and SAND	CL-ML	SILTY CLAY SILTY CLAY with SAND SILTY CLAY with GRAVEL SANDY SILTY CLAY SANDY SILTY CLAY with GRAVEL GRAVELLY SILTY CLAY GRAVELLY SILTY CLAY with SAND
GW-GC	Well-graded GRAVEL with CLAY (or SILTY CLAY) Well-graded GRAVEL with CLAY and SAND (or SILTY CLAY and SAND)		
GP-GM	Poorly graded GRAVEL with SILT Poorly graded GRAVEL with SILT and SAND	ML	SILT SILT with SAND SILT with GRAVEL SANDY SILT SANDY SILT with GRAVEL GRAVELLY SILT GRAVELLY SILT with SAND
GP-GC	Poorly graded GRAVEL with CLAY (or SILTY CLAY) Poorly graded GRAVEL with CLAY and SAND (or SILTY CLAY and SAND)		
GM	SILTY GRAVEL SILTY GRAVEL with SAND	OL	ORGANIC lean CLAY ORGANIC lean CLAY with SAND ORGANIC lean CLAY with GRAVEL SANDY ORGANIC lean CLAY SANDY ORGANIC lean CLAY with GRAVEL GRAVELLY ORGANIC lean CLAY GRAVELLY ORGANIC lean CLAY with SAND
GC	CLAYEY GRAVEL CLAYEY GRAVEL with SAND		
GC-GM	SILTY, CLAYEY GRAVEL SILTY, CLAYEY GRAVEL with SAND	OL	ORGANIC SILT ORGANIC SILT with SAND ORGANIC SILT with GRAVEL SANDY ORGANIC SILT SANDY ORGANIC SILT with GRAVEL GRAVELLY ORGANIC SILT GRAVELLY ORGANIC SILT with SAND
SW	Well-graded SAND Well-graded SAND with GRAVEL		
SP	Poorly graded SAND Poorly graded SAND with GRAVEL	CH	Fat CLAY Fat CLAY with SAND Fat CLAY with GRAVEL SANDY fat CLAY SANDY fat CLAY with GRAVEL GRAVELLY fat CLAY GRAVELLY fat CLAY with SAND
SW-SM	Well-graded SAND with SILT Well-graded SAND with SILT and GRAVEL		
SW-SC	Well-graded SAND with CLAY (or SILTY CLAY) Well-graded SAND with CLAY and GRAVEL (or SILTY CLAY and GRAVEL)	MH	Elastic SILT Elastic SILT with SAND Elastic SILT with GRAVEL SANDY elastic SILT SANDY elastic SILT with GRAVEL GRAVELLY elastic SILT GRAVELLY elastic SILT with SAND
SP-SM	Poorly graded SAND with SILT Poorly graded SAND with SILT and GRAVEL		
SP-SC	Poorly graded SAND with CLAY (or SILTY CLAY) Poorly graded SAND with CLAY and GRAVEL (or SILTY CLAY and GRAVEL)	OH	ORGANIC fat CLAY ORGANIC fat CLAY with SAND ORGANIC fat CLAY with GRAVEL SANDY ORGANIC fat CLAY SANDY ORGANIC fat CLAY with GRAVEL GRAVELLY ORGANIC fat CLAY GRAVELLY ORGANIC fat CLAY with SAND
SM	SILTY SAND SILTY SAND with GRAVEL		
SC	CLAYEY SAND CLAYEY SAND with GRAVEL	OH	ORGANIC elastic SILT ORGANIC elastic SILT with SAND ORGANIC elastic SILT with GRAVEL SANDY ORGANIC elastic SILT SANDY ORGANIC elastic SILT with GRAVEL GRAVELLY ORGANIC elastic SILT GRAVELLY ORGANIC elastic SILT with SAND
SC-SM	SILTY, CLAYEY SAND SILTY, CLAYEY SAND with GRAVEL		
PT	PEAT	OL/OH	ORGANIC SOIL ORGANIC SOIL with SAND ORGANIC SOIL with GRAVEL SANDY ORGANIC SOIL SANDY ORGANIC SOIL with GRAVEL GRAVELLY ORGANIC SOIL GRAVELLY ORGANIC SOIL with SAND
	COBBLES COBBLES and BOULDERS BOULDERS		

FIELD AND LABORATORY TESTING

- (C) Consolidation (ASTM D 2435)
- (CL) Collapse Potential (ASTM D 5333)
- (CP) Compaction Curve (CTM 216)
- (CR) Corrosivity Testing (CTM 643, CTM 422, CTM 417)
- (CU) Consolidated Undrained Triaxial (ASTM D 4767)
- (DS) Direct Shear (ASTM D 3080)
- (EI) Expansion Index (ASTM D 4829)
- (M) Moisture Content (ASTM D 2216)
- (OC) Organic Content-% (ASTM D 2974)
- (P) Permeability (CTM 220)
- (PA) Particle Size Analysis (ASTM D 422)
- (PI) Plasticity Index (AASHTO T 90) Liquid Limit (AASHTO T 89)
- (PL) Point Load Index (ASTM D 5731)
- (PM) Pressure Meter
- (PP) Pocket Penetrometer
- (R) R-Value (CTM 301)
- (SE) Sand Equivalent (CTM 217)
- (SG) Specific Gravity (AASHTO T 100)
- (SL) Shrinkage Limit (ASTM D 427)
- (SW) Swell Potential (ASTM D 4546)
- (TV) Pocket Torvane
- (UC) Unconfined Compression-Soil (ASTM D 2166) Unconfined Compression-Rock (ASTM D 2938)
- (UU) Unconsolidated Undrained Triaxial (ASTM D 2850)
- (UW) Unit Weight (ASTM D 4767)
- (VS) Vane Shear (AASHTO T 223)

APPARENT DENSITY OF COHESIONLESS SOILS

Description	SPT N_{60} (Blows / 12 inches)
Very loose	0 - 4
Loose	5 - 10
Medium Dense	11 - 30
Dense	31 - 50
Very Dense	> 50

MOISTURE

Description	Criteria
Dry	Absence of moisture, dusty, dry to the touch
Moist	Damp but no visible water
Wet	Visible free water, usually soil is below water table

PERCENT OR PROPORTION OF SOILS

Description	Criteria
Trace	Particles are present but estimated to be less than 5%
Few	5 to 10%
Little	15 to 25%
Some	30 to 45%
Mostly	50 to 100%

PARTICLE SIZE

Description		Size
Boulder		> 12"
Cobble		3" to 12"
Gravel	Coarse	3/4" to 3"
	Fine	No. 4 to 3/4"
Sand	Coarse	No. 10 to No. 4
	Medium	No. 40 to No. 10
	Fine	No. 200 to No. 40

Jon Hamaguchi
DESIGN OVERSIGHT Jon Hamaguchi
6-24-09
SIGN OFF DATE

DRAWN BY: J.Fang
CHECKED BY: L.Cheang

FIELD INVESTIGATION BY:
R.Jie

PREPARED FOR THE STATE OF CALIFORNIA DEPARTMENT OF TRANSPORTATION

L.Cheang
PROJECT ENGINEER

BRIDGE NO. 55-0457
POST MILES 16.8

CROWTHER AVENUE UC (WIDEN)
LOG OF TEST BORINGS 2 OF 3

DESIGN GENERAL PLAN SHEET (ENGLISH) (REV. 2/25/05)

ORIGINAL SCALE IN INCHES FOR REDUCED PLANS 0 1 2 3

CU 12
EA 0F0311

DISREGARD PRINTS BEARING EARLIER REVISION DATES

REVISION DATES (PRELIMINARY STAGE ONLY)

SHEET 19 OF 22

FILE => 55-0457-z-1tb02.dgn

USERNAME => rtrienard DATE PLOTTED => 16-DEC-2009 TIME PLOTTED => 12:45

DIST	COUNTY	ROUTE	POST MILES TOTAL PROJECT	SHEET No	TOTAL SHEETS
12	Ora	57	16.2/18.6	843	960

REGISTERED ENGINEER Lino Cheang DATE 6/15/09

12-14-09
PLANS APPROVAL DATE

REGISTERED PROFESSIONAL ENGINEER L. CHEANG NO. GE 2345 EXP. 9-30-09 GEOTECHNICAL STATE OF CALIFORNIA

The State of California or its officers or agents shall not be responsible for the accuracy or completeness of electronic copies of this plan sheet.

ORANGE COUNTY TRANSPORTATION AUTHORITY
550 S. MAIN STREET
ORANGE, CA 92863-1584

EARTH MECHANICS, INC.
17660 NEWHOPE STREET, SUITE E
FOUNTAIN VALLEY, CA 92708

BENCHMARKS:

Designation: 404-14-68 Elev = 210.124
Described by OCS 2003 - Found 3¾" OCS Aluminum Benchmark Disk Stamped "404-14-68", set in the Southwesterly Corner of a 4 ft by 8 ft Concrete Catch Basin. Monument is Located in the Northeasterly Corner of the Intersection of Placentia Avenue and the Atchinson Topeka Santa Fe Railway, 33.5 ft Easterly of the Centerline of Placentia Avenue and 87 ft Northerly of the Northerly Rail along the Railway. Monument is set Level with the Sidewalk.

Designation: 2G-25-70 Elev = 275.872
Described by OCS 2003 - Found 3¾" OCS Aluminum Benchmark Disk Stamped "2G-25-70", set in the Southeasterly Corner of a 4 ft by 6 ft Concrete Catch Basin. Monument is Located in the Northwesterly Corner of the Intersection of Yorba Linda Boulevard and Deerpark Drive, 75 ft Westerly of the Centerline of Deerpark and 46 ft Northerly of the Centerline of Yorba Linda. Monument is set Level with the Sidewalk.

NOTES:

(1) This LOTB sheet (Boring Record) was prepared in accordance with the Caltrans Soil and Rock Logging, Classification and Presentation Manual (June 2007)

(2) 2.4" samples were taken using a California Modified Sampler.

(3) An automatic trip hammer system consisting of a hammer weight of 140 lbs falling a distance of 30" was used to advance the drive sampler.

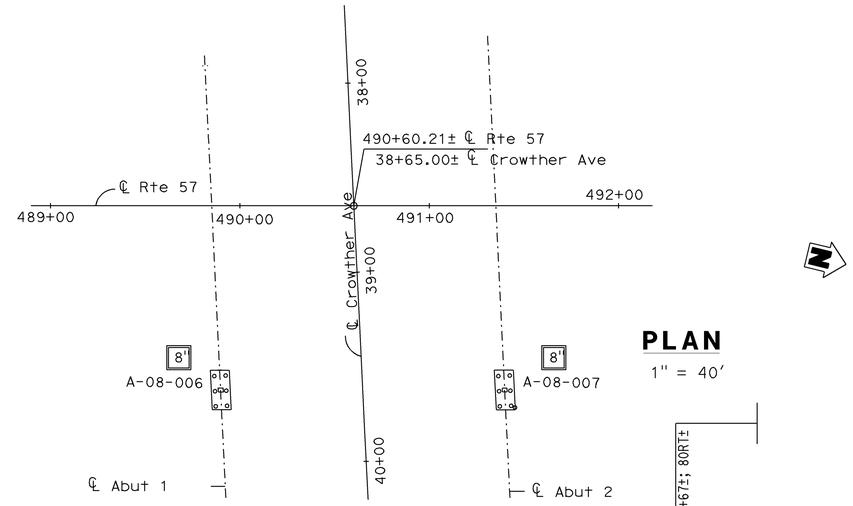

PLAN
1" = 40'

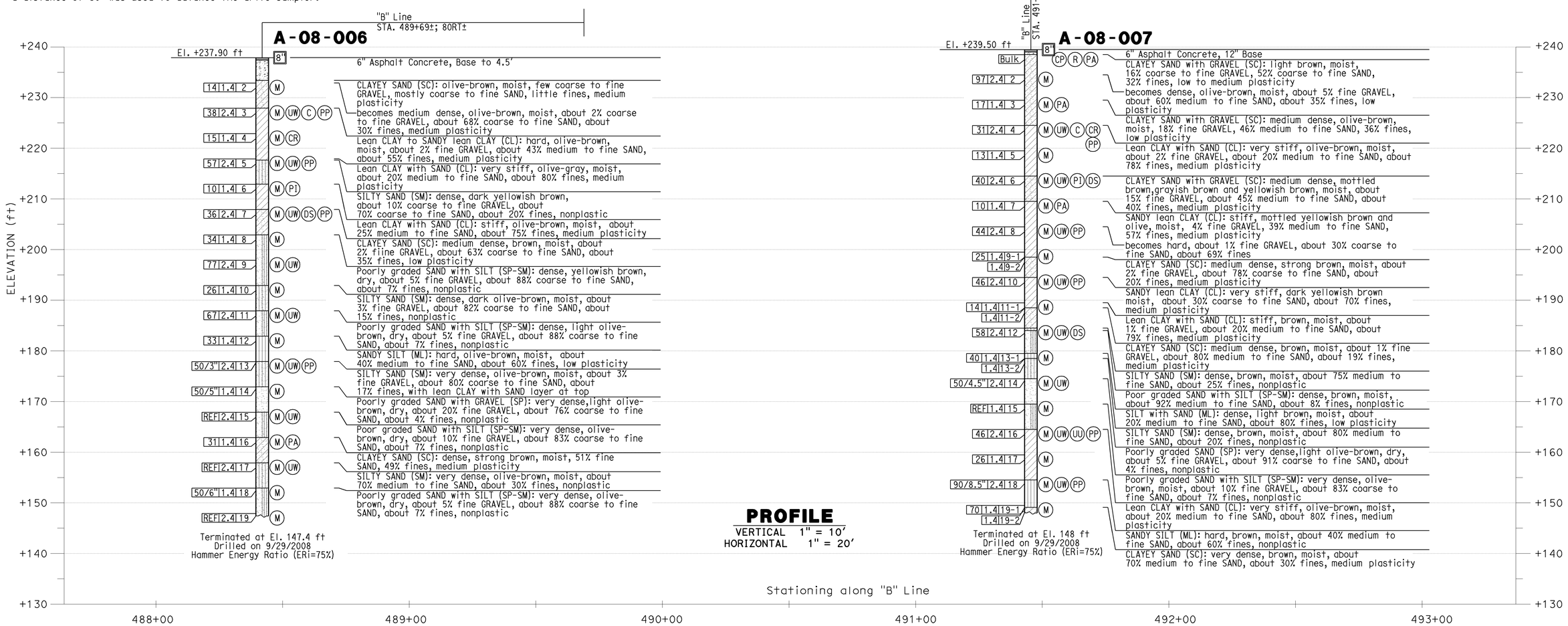

PROFILE
VERTICAL 1" = 10'
HORIZONTAL 1" = 20'

DESIGN OVERSIGHT Jon Hamaguchi 6-24-09 SIGN OFF DATE	DRAWN BY: J.Fang CHECKED BY: L.Cheang	FIELD INVESTIGATION BY: R.Jie	PREPARED FOR THE STATE OF CALIFORNIA DEPARTMENT OF TRANSPORTATION	L.Cheang PROJECT ENGINEER	BRIDGE NO. 55-0457 POST MILES 16.8

CROWTHER AVENUE UC (WIDEN)
LOG OF TEST BORINGS 3 OF 3

DESIGN GENERAL PLAN SHEET (ENGLISH) (REV. 2/25/05)

ORIGINAL SCALE IN INCHES FOR REDUCED PLANS 0 1 2 3

CU 12
EA 0F0311

DISREGARD PRINTS BEARING EARLIER REVISION DATES

REVISION DATES (PRELIMINARY STAGE ONLY)

SHEET 20 OF 22

FILE => 55-0457-z-1tb03.dgn

USERNAME => rtlehard DATE PLOTTED => 16-DEC-2009 TIME PLOTTED => 12:46

DIST	COUNTY	ROUTE	POST MILES TOTAL PROJECT	SHEET NO.	TOTAL SHEETS
12	Ora	57	11.1/21.2	476	491

Kul Bhushan 12/28/89
GEOTECHNICAL PROFESSIONAL
10-29-90
PLANS APPROVAL DATE

REGISTERED PROFESSIONAL ENGINEER — KUL BHUSHAN — No. GE 000144 — Exp. 12/31/1989 — GEOTECHNICAL — STATE OF CALIFORNIA

GEOFON, INC.
5552 CERRITOS AVENUE, SUITE B
CYPRESS, CALIFORNIA
JOB NO.: 88-353

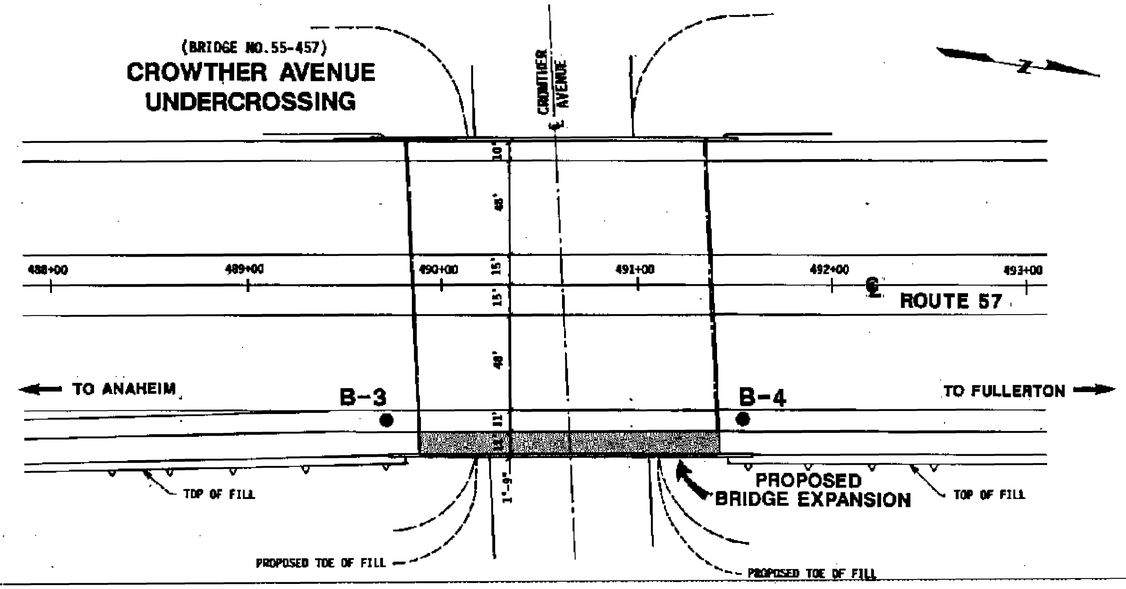

PLAN

SCALE: 1"=40'

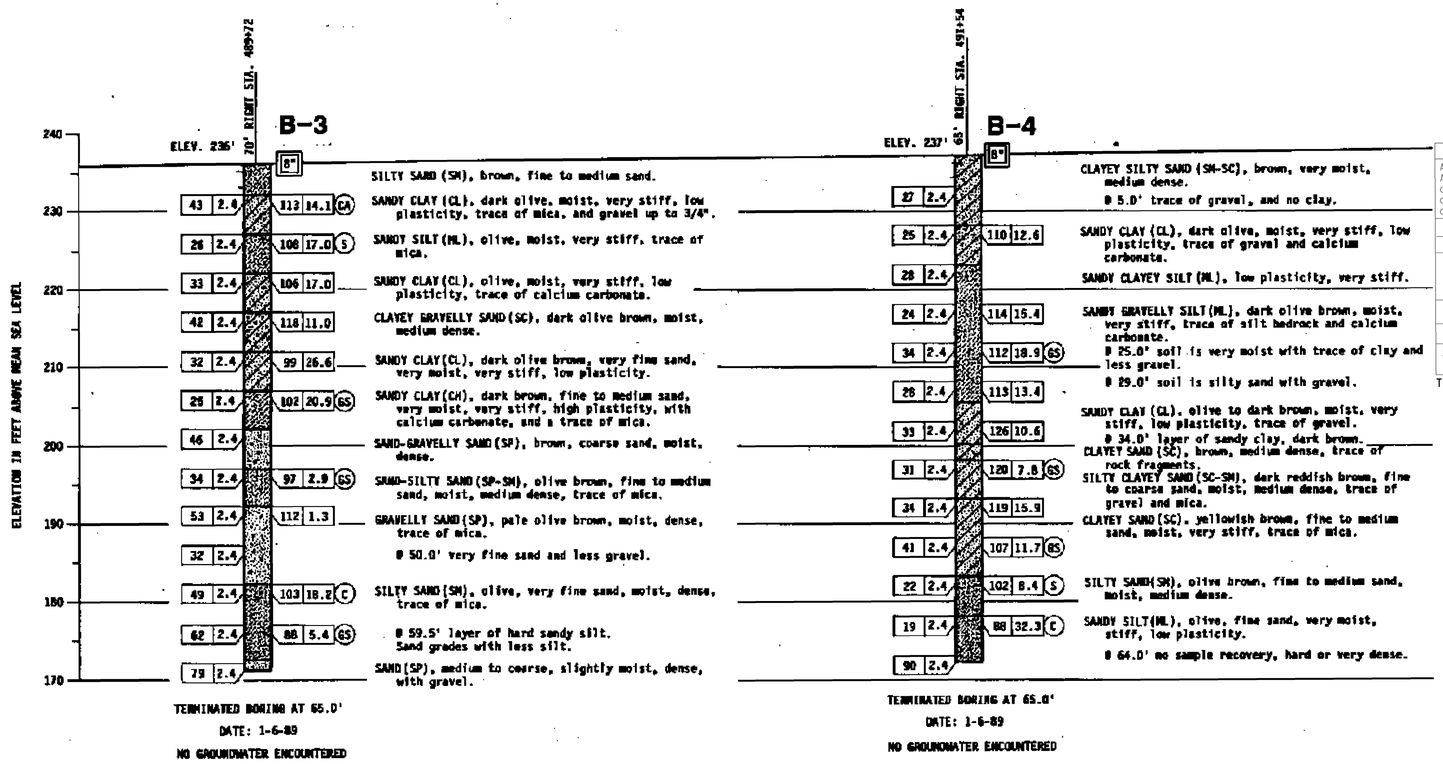

PROFILE

VERTICAL SCALE: 1"=10'
HORIZONTAL SCALE: 1"=20'

AS BUILT NO AS BUILT CHANGES
CORRECTIONS BY J. PINHEIRO I. PANGLE
CONTRACT NO. 12-0D104
DATE 11-24-92

DIVISION OF ENGINEERING SERVICES - GEOTECHNICAL SERVICES

As-Built Log of Test Borings sheet is considered an informational document only. As such, the State of California registration seal with signature, license number and registration certificate expiration date confirm that this is a true and accurate copy of the original document. This drawing is available and presented only for the convenience of any bidder, contractor or other interested party.

DIST.	COUNTY	ROUTE	POST MILES -TOTAL PROJECT	Sheet No.	Total Sheets
12	Ora	57	16.2/18.6	844	960

Lino Cheang 6/15/09
REGISTERED CIVIL ENGINEER DATE

CROWTHER AVENUE UC (WIDEN)
AS-BUILT LOG OF TEST BORINGS NO. 1

NOTE: A COPY OF THIS LOG OF TEST BORINGS IS AVAILABLE AT OFFICE OF STRUCTURE MAINTENANCE AND INVESTIGATIONS, SACRAMENTO, CALIFORNIA

CU: 12 EA: 0F0311 BRIDGE No. 55-0457

To accompany plans dated 12-14-09

Sheet 21 of 22

REGISTERED PROFESSIONAL ENGINEER — LINO C. CHEANG — NO. GE 2345 — EXP. 9/30/09 — GEOTECHNICAL — STATE OF CALIFORNIA

BM 535-0-70 ELEVATION 257.37

FOUND CHISELED CROSS ON TOP OF THE NW ANCHOR BOLT OF A SIGN BASE 77 FEET EASTERLY OF THE CENTERLINE OF ROUTE 57 (ORANGE FREEWAY) STATION 535+60 AND 105 FEET NORTHERLY OF THE CENTERLINE OF NUTWOOD AVE..

LEGEND OF BORING OPERATIONS

SAMPLE BORINGS (DRY)
ELECTRONIC CONE PENETROMETER TEST
ELECTRONIC CONE PENETROMETER
ROTARY SAMPLE BORING (WET)
ROTARY SAMPLE BORING (DRY)
AUGER BORING (DRY)
JET BORING
2½" CONE PENETROMETER
2½" CONE PENETROMETER BORING (WET)
BENCHMARK
TEST PIT

NOTE: 1. Penetration index based on 2.4 lb. sample diameter split barrel sampler driven with 140 lb. hammer falling 30 inches.

LEGEND OF EARTH MATERIALS

GRAVEL, SAND, SILT, CLAY, SANDY CLAY or CLAYEY SAND, SANDY SILT or SILTY SAND, SILTY CLAY, CLAYEY SILT, PEAT (MAY CONTAIN ORGANIC MATTER), FILL MATERIAL, IGNEOUS ROCK, SEDIMENTARY ROCK, METAMORPHIC ROCK

CONSISTENCY CLASSIFICATION FOR SOILS

According to the Standard Penetration Test

Penetration Index (Blows/Ft)	Granular	Cohesive
0-4	Very loose	Very soft
5-9	Loose	Soft
10-19	Slightly compact	Soft
20-34	Compact	Very stiff
35-50	Dense	Hard
>70	Very dense	Very hard

NOTE: Classification of earth material as shown on this sheet is based upon field inspection and is not to be construed to imply mechanical analysis.

DESIGN OFFICE CHIEF 8-22-90	DRAWN BY B. BASMADJIAN	S. MOHAMAD FIELD INVESTIGATOR	PREPARED FOR THE STATE OF CALIFORNIA DEPARTMENT OF TRANSPORTATION
SIGN OFF DATE	CHECKED BY H. ABDALLAH	DATE 12-20-89	

PROJECT ENGINEER

BRIDGE NO. 55-457
POST MILE 16.8

CROWTHER AVE. UNDERCROSSING (WIDEN)
LOG OF TEST BORINGS

ORIGINAL SCALE IN INCHES FOR REDUCED PLANS 0 1 2 3

CU 12208
EA 020180

DISREGARD PRINTS BEARING EARLIER REVISION DATES →

REVISION DATES (PRELIMINARY STAGE ONLY)

SHEET 8 OF 9

FILENAME => 55-0457-z-ltb04.tif

FED. ROAD DIV. NO.	STATE	F.A. PROJECTION	SHEET NO.	TOTAL SHEETS
7	CALIF.			

DIST.	COUNTY	ROUTE	SECTION	SHEET NO.	TOTAL SHEETS
07	Ora	57	16.6/21.8	134	197

August 28, 1967

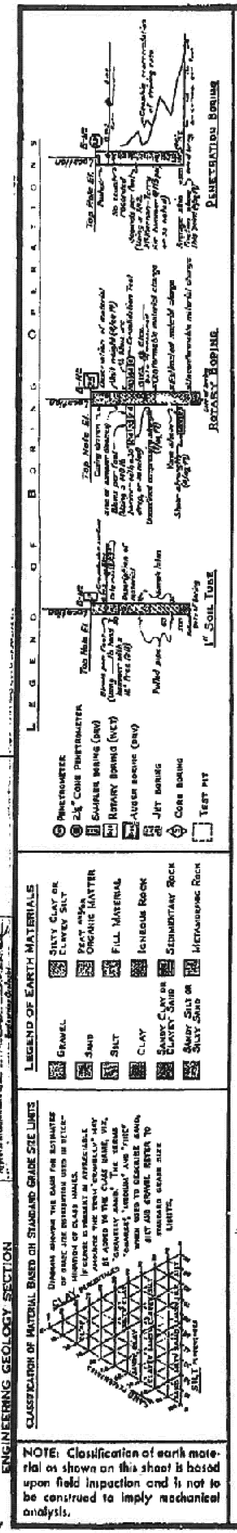

NOTE: Classification of earth material as shown on this sheet is based upon field inspection and is not to be construed to imply mechanical analysis.

BRIDGE DEPARTMENT
ENGINEERING GEOLOGY SECTION

FIELD STUDY By W. Cain 12-6-65
DRAWN By G. Bowie 12-21-65
CHECKED By O. Mikes 12-29-65

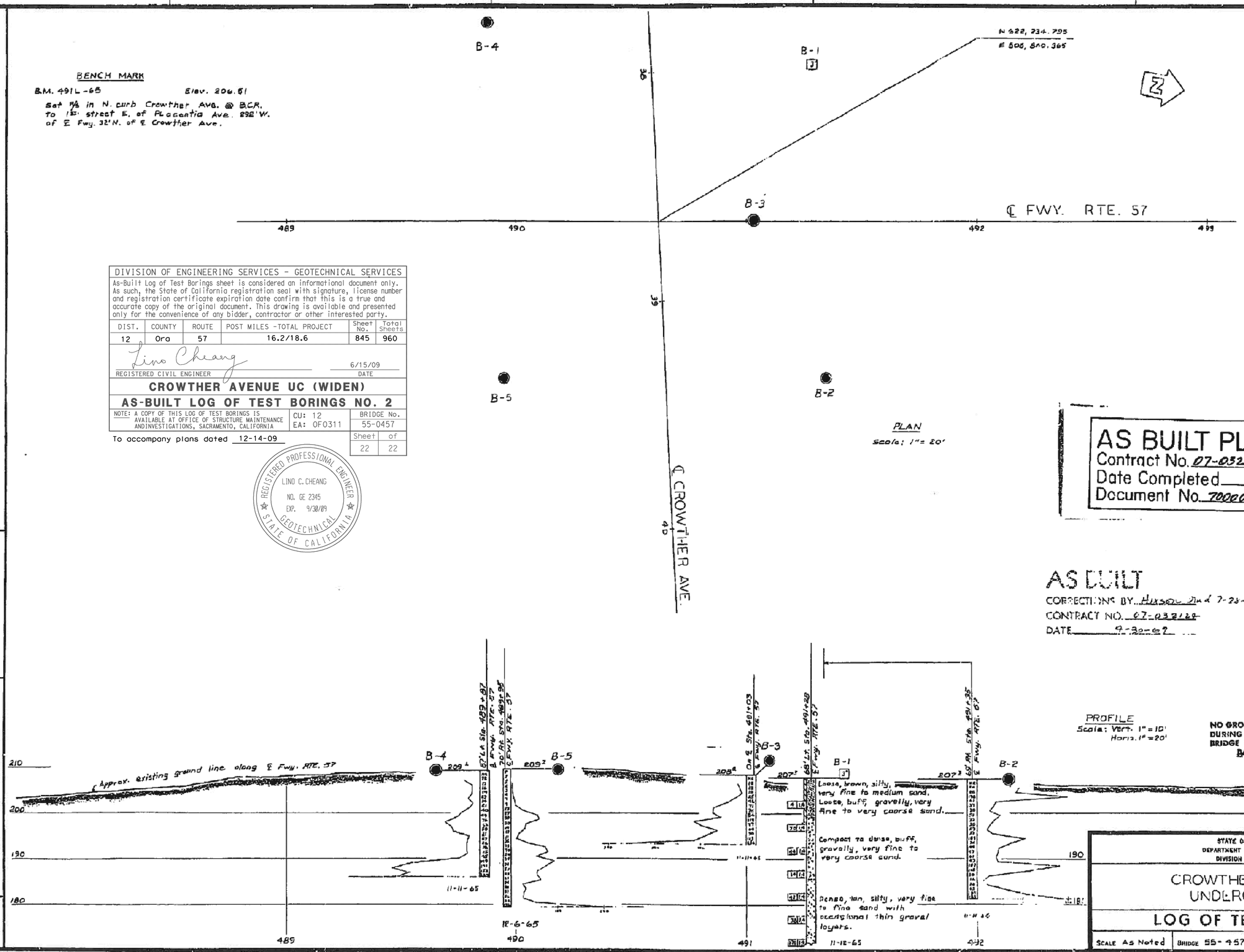

DIVISION OF ENGINEERING SERVICES - GEOTECHNICAL SERVICES

As-Built Log of Test Borings sheet is considered an informational document only. As such, the State of California registration seal with signature, license number and registration certificate expiration date confirm that this is a true and accurate copy of the original document. This drawing is available and presented only for the convenience of any bidder, contractor or other interested party.

DIST.	COUNTY	ROUTE	POST MILES -TOTAL PROJECT	Sheet No.	Total Sheets
12	Ora	57	16.2/18.6	845	960

Lino Cheang
REGISTERED CIVIL ENGINEER
6/15/09
DATE

CROWTHER AVENUE UC (WIDEN)

AS-BUILT LOG OF TEST BORINGS NO. 2

NOTE: A COPY OF THIS LOG OF TEST BORINGS IS AVAILABLE AT OFFICE OF STRUCTURE MAINTENANCE AND INVESTIGATIONS, SACRAMENTO, CALIFORNIA

CU: 12
EA: 0F0311

BRIDGE No. 55-0457

Sheet 22 of 22

To accompany plans dated 12-14-09

REGISTERED PROFESSIONAL ENGINEER
LINO C. CHEANG
NO. GE 2345
EXP. 9/30/09
GEOTECHNICAL
STATE OF CALIFORNIA

AS BUILT PLANS
Contract No. 07-032124
Date Completed
Document No. 70000668

AS BUILT
CORRECTIONS BY Hixson Dwd 7-28-69
CONTRACT NO. 07-032124
DATE 9-30-69

NO GROUND WATER ENCOUNTERED DURING THIS INVESTIGATION BY BRIDGE DEPT. GEOLOGY SECTION
DATE Nov & Dec. 1965

STATE OF CALIFORNIA
DEPARTMENT OF PUBLIC WORKS
DIVISION OF HIGHWAYS

SHEET 12 OF 12

CROWTHER AVENUE UNDERCROSSING

LOG OF TEST BORINGS

SCALE As Noted | BRIDGE 55-457 | FILE | DRAWING 55457-12

Charge: 07208
W.A.: 032121

Disregard prints bearing earlier numbers

PREL. DRAWING No. PR-

134

FILENAME => 55-0457-z-1tb05.tif

DIST	COUNTY	ROUTE	POST MILES TOTAL PROJECT	SHEET No	TOTAL SHEETS
12	Ora	57	16.2/18.6	846	960

Khaled Allam 6/15/09
REGISTERED CIVIL ENGINEER DATE

12-14-09
PLANS APPROVAL DATE

REGISTERED PROFESSIONAL ENGINEER Khaled Allam No. 67110 Exp. 9/30/10 CIVIL STATE OF CALIFORNIA

The State of California or its officers or agents shall not be responsible for the accuracy or completeness of electronic copies of this plan sheet.

OCTA
550 S Main Street
Orange, CA 92868

PBS&J
625 The City Drive South, Suite 200
Orange, CA 92868

NOTES

1. For pile data table, see "Foundation Plan" sheet
2. Not all piles are shown

RETROFIT LEGEND

(C) Column Casing (Class P/F)

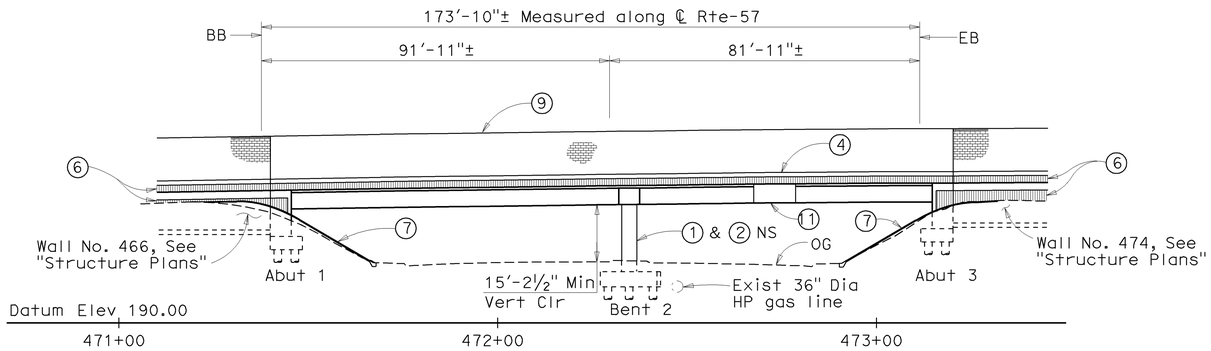

ELEVATION
1" = 20'

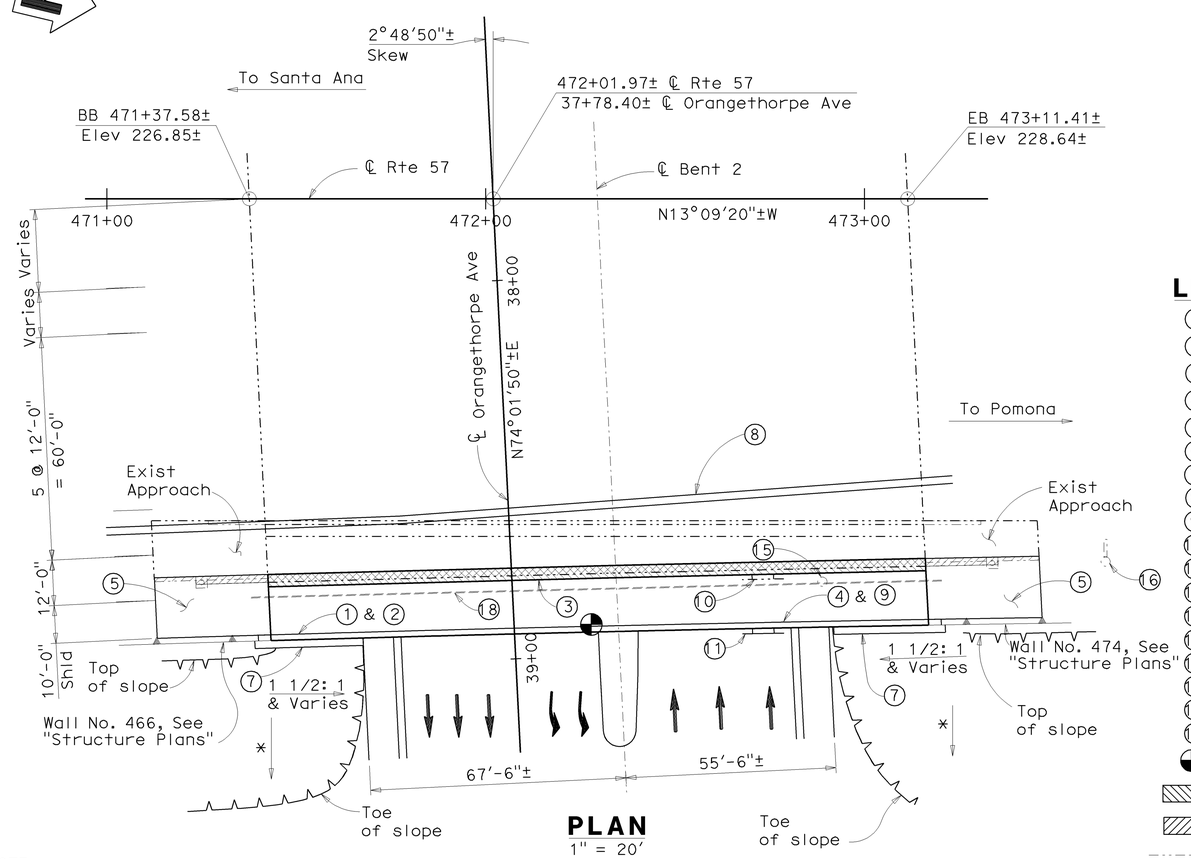

PLAN
1" = 20'

NOTE:
THE CONTRACTOR SHALL VERIFY ALL CONTROLLING FIELD DIMENSIONS BEFORE ORDERING OR FABRICATING ANY MATERIAL.

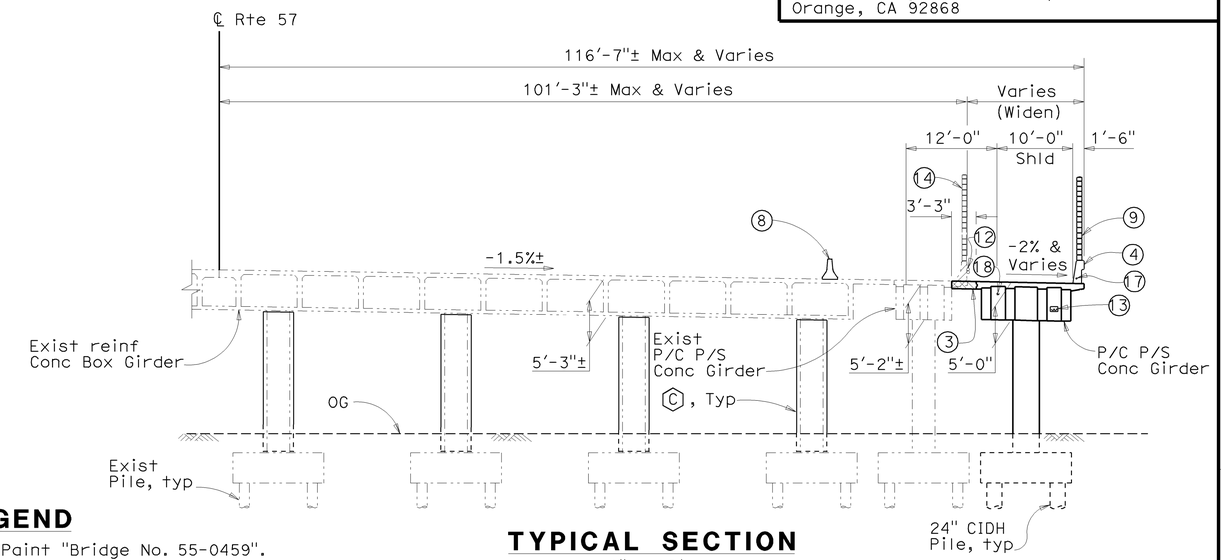

TYPICAL SECTION
1" = 10'

LEGEND

1. Paint "Bridge No. 55-0459".
2. Paint "Orangethorpe Ave UC"
3. Closure Pour
4. Conc Barrier Type 736 (Mod)
5. Structure Approach, Type N(30D)
6. Fractured Rib Texture
7. Slope Paving
8. Temporary Railing, Type K, See "Road Plans"
9. Sound wall (Masonry Block)
10. Relocate Exist Sign Panel, See "Road Plans".
11. Overhead Sign Structure
12. Relocate Exist Fiber Optic Conduits.
13. Relocated Fiber Optic Conduits (4" Dia Conduits tot 2)
14. Remove Existing Barrier Type 27 and Sound Wall.
15. Exist steel pole (relocate by other), see "Road plans"
16. Exist overhead sign to be relocated, see "Road plans"
17. 2" Sprinkler control conduit, see "Irrigation Plans"
18. 3" Water Supply Line, see "Irrigation Plans".

Indicates Point of Minimum Vertical Clearance
Indicates Closure Pour
Indicates Bridge Removal (Portion).
Indicates Existing Structure
* Match Exist Slope

ORANGETHORPE AVENUE UC — BRIDGE NO 55-0459

QUANTITIES		
BRIDGE REMOVAL (PORTION), LOCATION A	LUMP	SUM
STRUCTURE EXCAVATION (BRIDGE)	291	CY
STRUCTURE BACKFILL (BRIDGE)	215	CY
WATER SUPPLY LINE (BRIDGE)	244	LF
24" CAST-IN-DRILLED-HOLE CONCRETE PILING	698	LF
STRUCTURAL CONCRETE, BRIDGE FOOTING	72	CY
STRUCTURAL CONCRETE, BRIDGE	226	CY
STRUCTURAL CONCRETE, APPROACH SLAB (TYPE N)	40	CY
FRACTURED RIB TEXTURE	111	SQFT
DRILL AND BOND DOWEL	136	LF
FURNISH PRECAST PRESTRESSED CONCRETE RECTANGULAR GIRDER (70'-80')	4	EA
FURNISH PRECAST PRESTRESSED CONCRETE RECTANGULAR GIRDER (80'-90')	4	EA
ERECT PRECAST PRESTRESSED CONCRETE GIRDER	8	EA
SOUND WALL (MASONRY BLOCK)	2,166	SQFT
PRESSURE GROUT HOLE	75	LF
JOINT SEAL (MR 1")	36	LF
BAR REINFORCING STEEL (BRIDGE)	95,560	LB
HEADED BAR REINFORCEMENT	208	EA
ASPHALT MEMBRANE WATERPROOFING	121	SQFT
COLUMN CASING	8,721	LB
FURNISH SIGN STRUCTURE (BRIDGE MOUNTED WITH WALKWAY)	2,066	LB
INSTALL SIGN STRUCTURE (BRIDGE MOUNTED WITH WALKWAY)	2,066	LB
SLOPE PAVING (CONCRETE)	11	CY
MISCELLANEOUS METAL (BRIDGE)	450	LB
CONCRETE BARRIER (TYPE 736A MODIFIED)	7	LF
CONCRETE BARRIER (TYPE 736 MODIFIED)	174	LF

Jon Hanaguchi
DESIGN OVERSIGHT Jon Hanaguchi

6-24-09
SIGN OFF DATE

	BY	CHECKED
DESIGN	K. Allam/M. Carbuccia	S. Megaly/Y. Deng
DETAILS	I. Karkoutli	S. Megaly/Y. Deng
QUANTITIES	L. Khaleghi	V. Nong

LRFD DESIGN — LIVE LOADING: HL93 W/'LOW-BOY' AND PERMIT DESIGN VEHICLE
LAYOUT — BY I. Karkoutli — CHECKED Alaedin Moubayed
SPECIFICATIONS — BY S. Sheikh — PLANS AND SPECS COMPARED S. Sheikh

PREPARED FOR THE STATE OF CALIFORNIA DEPARTMENT OF TRANSPORTATION

Alaedin Moubayed
PROJECT ENGINEER

BRIDGE NO. 55-0459
POST MILES 16.4

ORANGETHORPE AVE UC (WIDEN)
GENERAL PLAN

DESIGN GENERAL PLAN SHEET (ENGLISH) (REV. 2/25/05)

ORIGINAL SCALE IN INCHES FOR REDUCED PLANS 0 1 2 3

CU 12
EA 0F0311

DISREGARD PRINTS BEARING EARLIER REVISION DATES

REVISION DATES (PRELIMINARY STAGE ONLY)

SHEET 1 OF 32

FILE => 55-0459-a-gp01.dgn

USERNAME => trlenard DATE PLOTTED => 16-DEC-2009 TIME PLOTTED => 12:54

DIST	COUNTY	ROUTE	POST MILES TOTAL PROJECT	SHEET No	TOTAL SHEETS
12	Ora	57	16.2/18.6	847	960

Khaled Allam 6/15/09
REGISTERED CIVIL ENGINEER DATE

12-14-09
PLANS APPROVAL DATE

REGISTERED PROFESSIONAL ENGINEER Khaled Allam No. 67110 Exp. 9/30/10 CIVIL STATE OF CALIFORNIA

The State of California or its officers or agents shall not be responsible for the accuracy or completeness of electronic copies of this plan sheet.

OCTA
550 SOUTH MAIN STREET
ORANGE, CA 92863

PBS&J
625 THE CITY DRIVE SOUTH, SUITE 200
ORANGE, CA 92868

GENERAL NOTES
LOAD AND RESISTANCE FACTOR DESIGN

Design:

AASHTO LRFD Bridge Design Specification, 3rd edition with interims through 2006 and the Caltrans Amendments 3.06.01; except that abutment, earth retaining systems, bridge details taken from Standard plans March 2006 and earlier versions, and standard Bridge details XS sheets, are designed using Bridge Design Specifications ('96 AASHTO w/Revisions by Caltrans).

Seismic Design:

Caltrans Seismic Design Criteria (SDC), Version 1.4
June 2006

Dead Load:

Includes 35 psf for future wearing surface

Live Load:

HL-93 and permit design load

Seismic Loading:

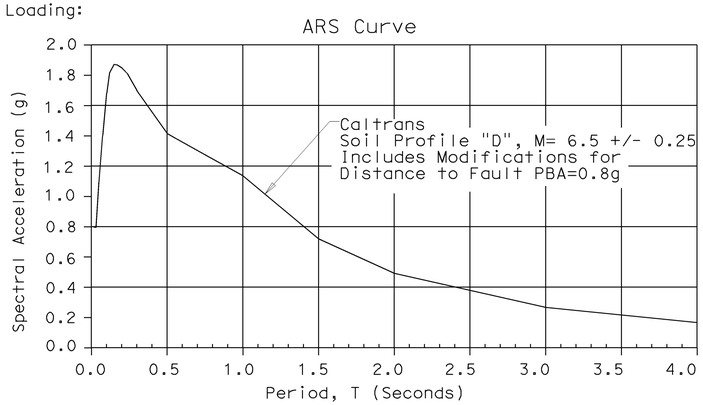

Reinforced Concrete:

f_y = 60 ksi

f'_c = See Concrete Strength and Type Limits

Prestressed Concrete:

For Prestressing notes, see "Precast Girders Details No. 1 Sheets

PLAN SYMBOLS

Standard Plan Sheet No.

Detail No.

Section Identification

Girder Identification

NOTE:
THE CONTRACTOR SHALL VERIFY ALL CONTROLLING FIELD DIMENSIONS BEFORE ORDERING OR FABRICATING ANY MATERIAL.

INDEX TO PLANS

SHEET NO.	TITLE
1	General Plan
2	Index to Plans & General Notes
3	Bridge Removal Details
4	Deck Elevations
5	Foundation Plan
6	Abutment Layout
7	Abutment Details No. 1
8	Abutment Details No. 2
9	Bent Layout
10	Bent Details No. 1
11	Bent Details No. 2
12	Typical Section
13	Girder Layout
14	Precast Girder Details No. 1
15	Precast Girder Details No. 2
16	Precast Girder Details No. 3
17	Precast Girder Details No. 4
18	Additional Deck Reinforcement
19	Fiber Optic Conduits Details
20	Structure Approach Type N(30D)
21	Structure Approach Drainage Details
22	Steel Column Casings
23	Concrete Barrier Type 736 (Mod)
24	Bridge Mounted Sign Details No. 1
25	Bridge Mounted Sign Details No. 2
26	Soundwall - Masonry Block on Bridge
27	Slope Paving
28	Log of Test Borings 1 of 3
29	Log of Test Borings 2 of 3
30	Log of Test Borings 3 of 3
31	As-Built Log of Test Borings No. 1
32	As-Built Log of Test Borings No. 2

STANDARD PLANS DATED MAY 2006

	A10A	Acronyms and Abbreviations (Sheet 1 of 2)
	A10B	Acronyms and Abbreviations (Sheet 2 of 2)
	A10C	Symbols (Sheet 1 of 2)
	A10D	Symbols (Sheet 2 of 2)
	A62C	Limits of Payment for Excavation and Backfill - Bridge
	B0-1	Bridge Details
	B0-3	Bridge Details
	B0-5	Bridge Details
	B0-13	Bridge Details
	B2-3	16" and 24" Cast-In-Drilled-Hole Concrete Pile
RSP	B6-21	Joint Seals (Maximum Movement Rating = 2")
	B7-10	Utility Opening Box Girder
	B11-56	Concrete Barrier Type 736 (MOD)
	B14-3	Communication and Sprinkler Control Conduits (Conduit less Than Size 4")
	B14-4	Water Supply Line (Bridge) (Pipe Size Less Than 4")
	B14-5	Water Supply Line (Details) (Pipe Size Less Than 4")
	T-3	Temporary Railing (Type K)

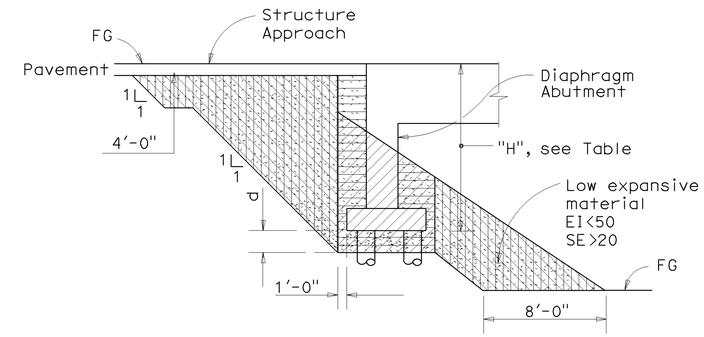

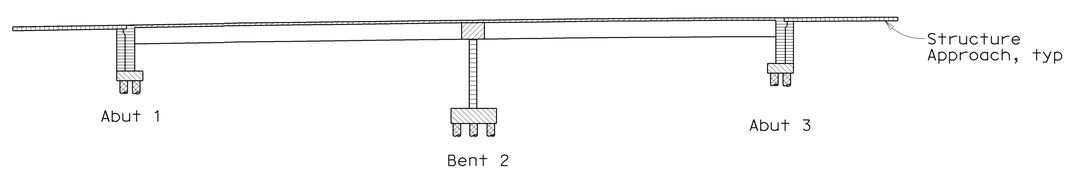

LEGEND

- Low Expansive Material EI<50 and SE>20
- Structure Excavation (Bridge)
- Structure Backfill (Bridge)
- Roadway Excavation (see "Road Plans")
- Roadway Abutment (See "Road Plans")

H	d
< 16-0"	4'-0"
> 16'-0"	0

NOTE:

Transverse limit of Low Expansive Material shall be 1'-0" from edges of abutment footing

LIMITS OF EXPANSIVE SOIL EXCLUSION ZONE IN BRIDGE EMBANKMENT

No Scale

- Precast Prestressed girder, see "Prestressing Notes" on "Precast Girder Details" for strength
- Structural Concrete, Bridge (f'c =5.0 ksi @ 28 days)
- Structural Concrete, CIDH Concrete Pile (f'c=4.0 ksi)
- Structural Concrete, Bridge footing
- Structural Concrete, Approach Slab
- Structural Concrete, Bridge (f'c =4.0 ksi @ 28 days)

CONCRETE STRENGTH AND TYPE LIMITS

No Scale

Jon Hamaguchi
DESIGN OVERSIGHT Jon Hamaguchi
6-24-09
SIGN OFF DATE

	BY	CHECKED
DESIGN	K. Allam/M. Carbuccia	S. Megally/Y. Deng
DETAILS	I. Karkoutli	S. Megally/Y. Deng
QUANTITIES	L. Khaleghi	V. Nong

PREPARED FOR THE STATE OF CALIFORNIA DEPARTMENT OF TRANSPORTATION

Alaedin Moubayed
PROJECT ENGINEER

BRIDGE NO. 55-0459
POST MILE 16.4

ORANGETHORPE AVE UC (WIDEN)
INDEX TO PLANS & GENERAL NOTES

DESIGN DETAIL SHEET (ENGLISH) (REV. 2/25/05)

ORIGINAL SCALE IN INCHES FOR REDUCED PLANS 0 1 2 3

CU 12
EA 0F0311

DISREGARD PRINTS BEARING EARLIER REVISION DATES

REVISION DATES (PRELIMINARY STAGE ONLY)

SHEET 2 OF 32

FILE => 55-0459-a-itp.dgn

USERNAME => trhenard DATE PLOTTED => 16-DEC-2009 TIME PLOTTED => 12:45

DIST	COUNTY	ROUTE	POST MILES TOTAL PROJECT	SHEET No	TOTAL SHEETS
12	Ora	57	16.2/18.6	848	960

Khaled Allam 6/15/09
REGISTERED CIVIL ENGINEER DATE

12-14-09
PLANS APPROVAL DATE

REGISTERED PROFESSIONAL ENGINEER
Khaled Allam
No. 67110
Exp. 9/30/10
CIVIL
STATE OF CALIFORNIA

The State of California or its officers or agents shall not be responsible for the accuracy or completeness of electronic copies of this plan sheet.

OCTA
550 SOUTH MAIN STREET
ORANGE, CA 92863

PBS&J
625 THE CITY DRIVE SOUTH, SUITE 200
ORANGE, CA 92868

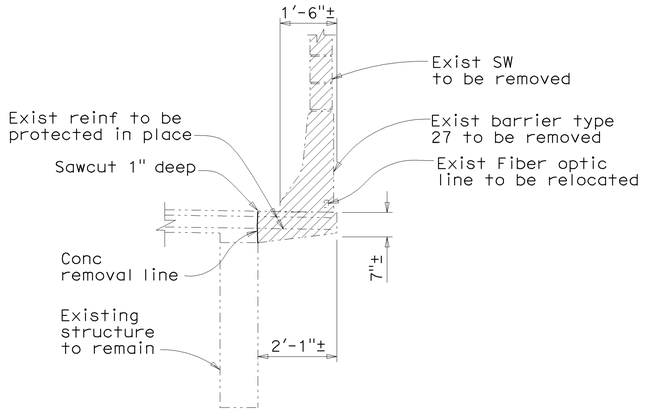

OVERHANG REMOVAL DETAILS & DECK REFINISH LIMIT

No Scale

LEGEND

Indicates Bridge removal (Portion)

Indicates Existing structure

NOTES:

1. The limit of overhang removal is from BB to EB for Diaphragm Abutment.
2. The limit of barrier removal is between ends of WW.

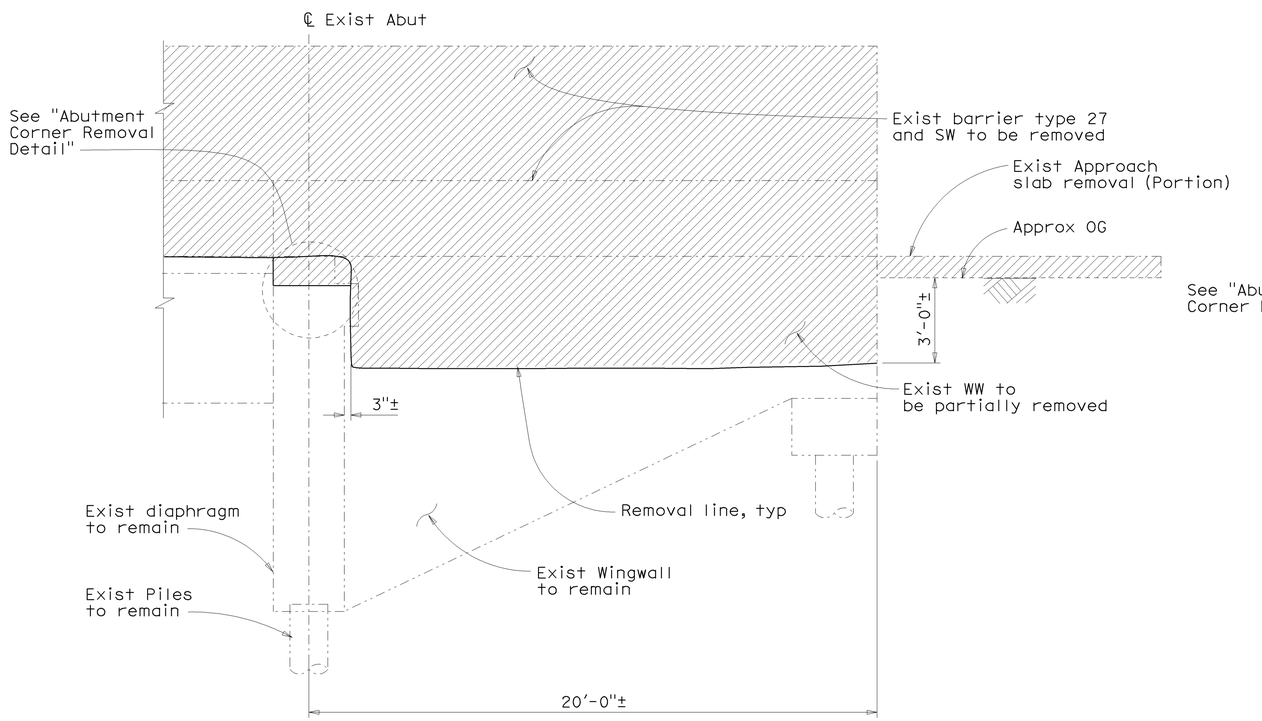

ABUTMENT AND WINGWALL REMOVAL DETAILS

No Scale

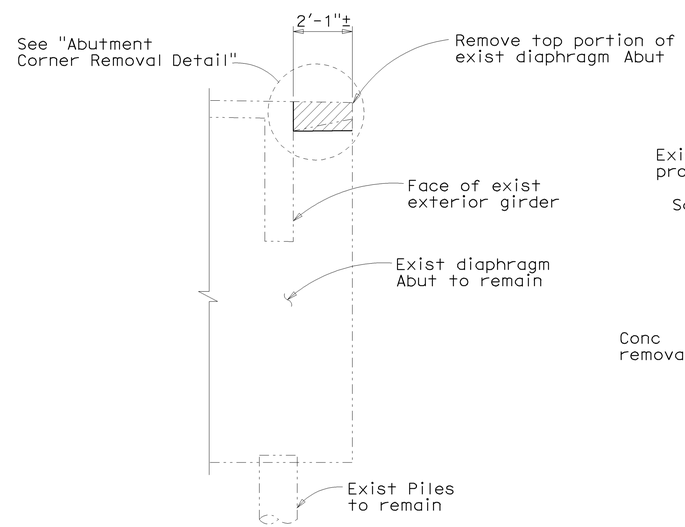

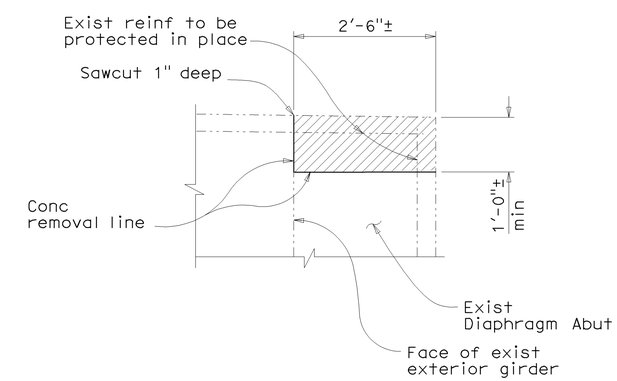

ABUTMENT CORNER REMOVAL DETAIL

NOTE:
THE CONTRACTOR SHALL VERIFY ALL CONTROLLING FIELD DIMENSIONS BEFORE ORDERING OR FABRICATING ANY MATERIAL.

Jon Hamaguchi
DESIGN OVERSIGHT Jon Hamaguchi
6-24-09
SIGN OFF DATE

	BY	CHECKED
DESIGN	K. Allam/M. Carbuccia	Y. Deng
DETAILS	I. Karkoutli	Y. Deng
QUANTITIES	L. Khaleghi	V. Nong

PREPARED FOR THE
STATE OF CALIFORNIA
DEPARTMENT OF TRANSPORTATION

Alaedin Moubayed
PROJECT ENGINEER

BRIDGE NO. 55-0459
POST MILE 16.4

ORANGETHORPE AVE UC (WIDEN)
BRIDGE REMOVAL DETAILS

DESIGN DETAIL SHEET (ENGLISH) (REV. 2/25/05)

ORIGINAL SCALE IN INCHES FOR REDUCED PLANS 0 1 2 3

CU 12
EA 0F0311

DISREGARD PRINTS BEARING EARLIER REVISION DATES

REVISION DATES (PRELIMINARY STAGE ONLY)

SHEET 3 OF 32

FILE => 55-0459-c-brd.dgn

USERNAME => trienard DATE PLOTTED => 16-DEC-2009 TIME PLOTTED => 12:45

DIST	COUNTY	ROUTE	POST MILES TOTAL PROJECT	SHEET No	TOTAL SHEETS
12	Ora	57	16.2/18.6	849	960

Khaled Allam 6/15/09
REGISTERED CIVIL ENGINEER DATE

12-14-09
PLANS APPROVAL DATE

REGISTERED PROFESSIONAL ENGINEER
Khaled Allam
No. 67110
Exp. 9/30/10
CIVIL
STATE OF CALIFORNIA

The State of California or its officers or agents shall not be responsible for the accuracy or completeness of electronic copies of this plan sheet.

OCTA
550 SOUTH MAIN STREET
ORANGE, CA 92863

PBS&J
625 THE CITY DRIVE SOUTH, SUITE 200
ORANGE, CA 92868

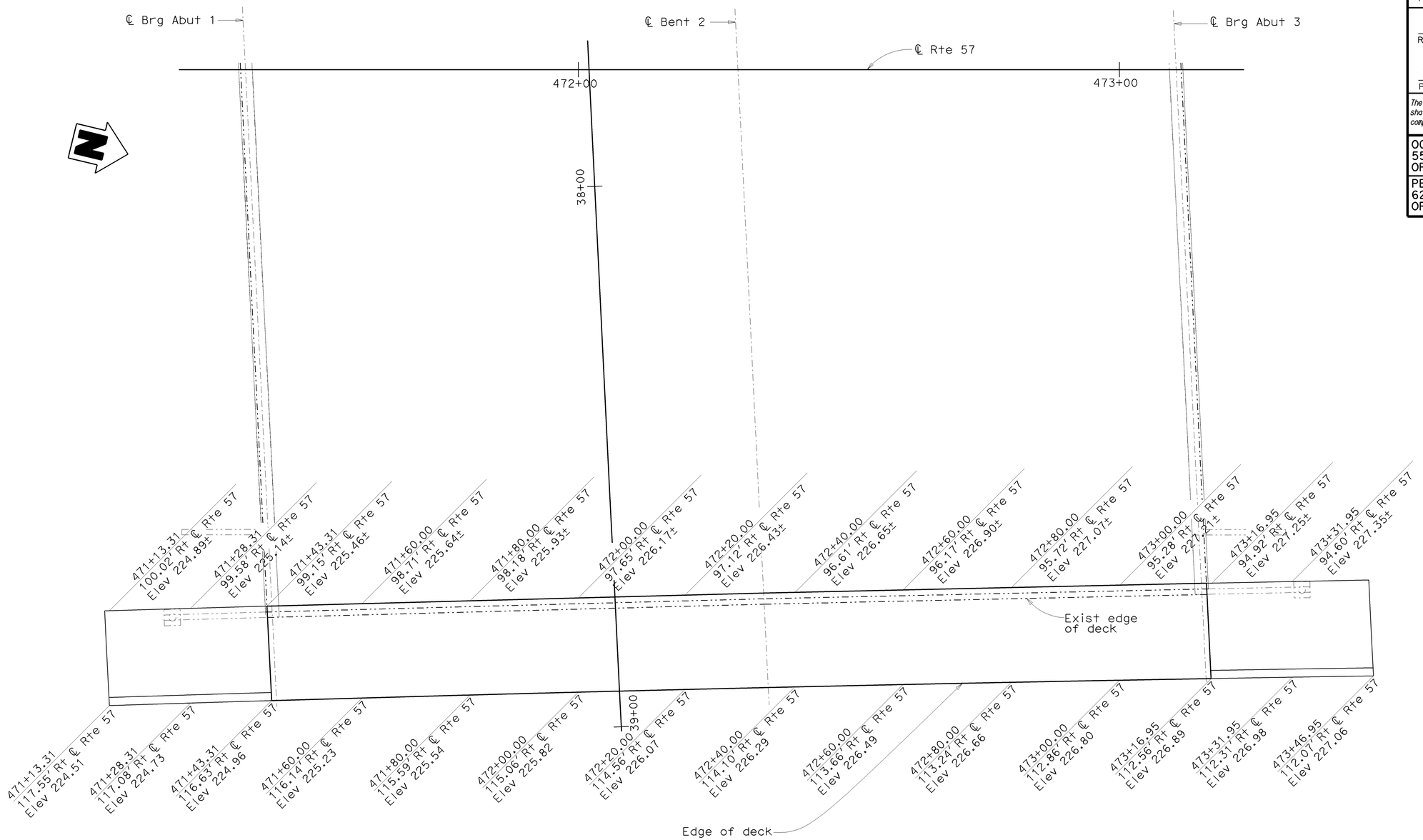

PLAN
1" = 10'

NOTE:
THE CONTRACTOR SHALL VERIFY ALL CONTROLLING FIELD DIMENSIONS BEFORE ORDERING OR FABRICATING ANY MATERIAL.

Jon Hamaguchi
DESIGN OVERSIGHT Jon Hamaguchi
6-24-09
SIGN OFF DATE

	BY	CHECKED
DESIGN	K. Allam/M. Carbuccia	Y. Deng
DETAILS	I. Karkoutli	Y. Deng
QUANTITIES	L. Khaleghi	V. Nong

PREPARED FOR THE
STATE OF CALIFORNIA
DEPARTMENT OF TRANSPORTATION

Alaedin Moubayed
PROJECT ENGINEER

BRIDGE NO. 55-0459
POST MILE 16.4

ORANGETHORPE AVE UC (WIDEN)
DECK ELEVATIONS

DESIGN DETAIL SHEET (ENGLISH) (REV. 2/25/05)

ORIGINAL SCALE IN INCHES FOR REDUCED PLANS 0 1 2 3

CU 12
EA 0F0311

DISREGARD PRINTS BEARING EARLIER REVISION DATES

REVISION DATES (PRELIMINARY STAGE ONLY)

SHEET 4 OF 32

FILE => 55-0459-d-de01.dgn

USERNAME => friehard DATE PLOTTED => 16-DEC-2009 TIME PLOTTED => 12:45

DIST	COUNTY	ROUTE	POST MILES TOTAL PROJECT	SHEET No	TOTAL SHEETS
12	Ora	57	16.2/18.6	850	960

Khaled Allam 6/15/09
REGISTERED CIVIL ENGINEER DATE

12-14-09
PLANS APPROVAL DATE

REGISTERED PROFESSIONAL ENGINEER Khaled Allam No. 67110 Exp. 9/30/10 CIVIL STATE OF CALIFORNIA

The State of California or its officers or agents shall not be responsible for the accuracy or completeness of electronic copies of this plan sheet.

OCTA
550 S Main Street
Orange, CA 92868

PBS&J
625 The City Drive South, Suite 200
Orange, CA 92868

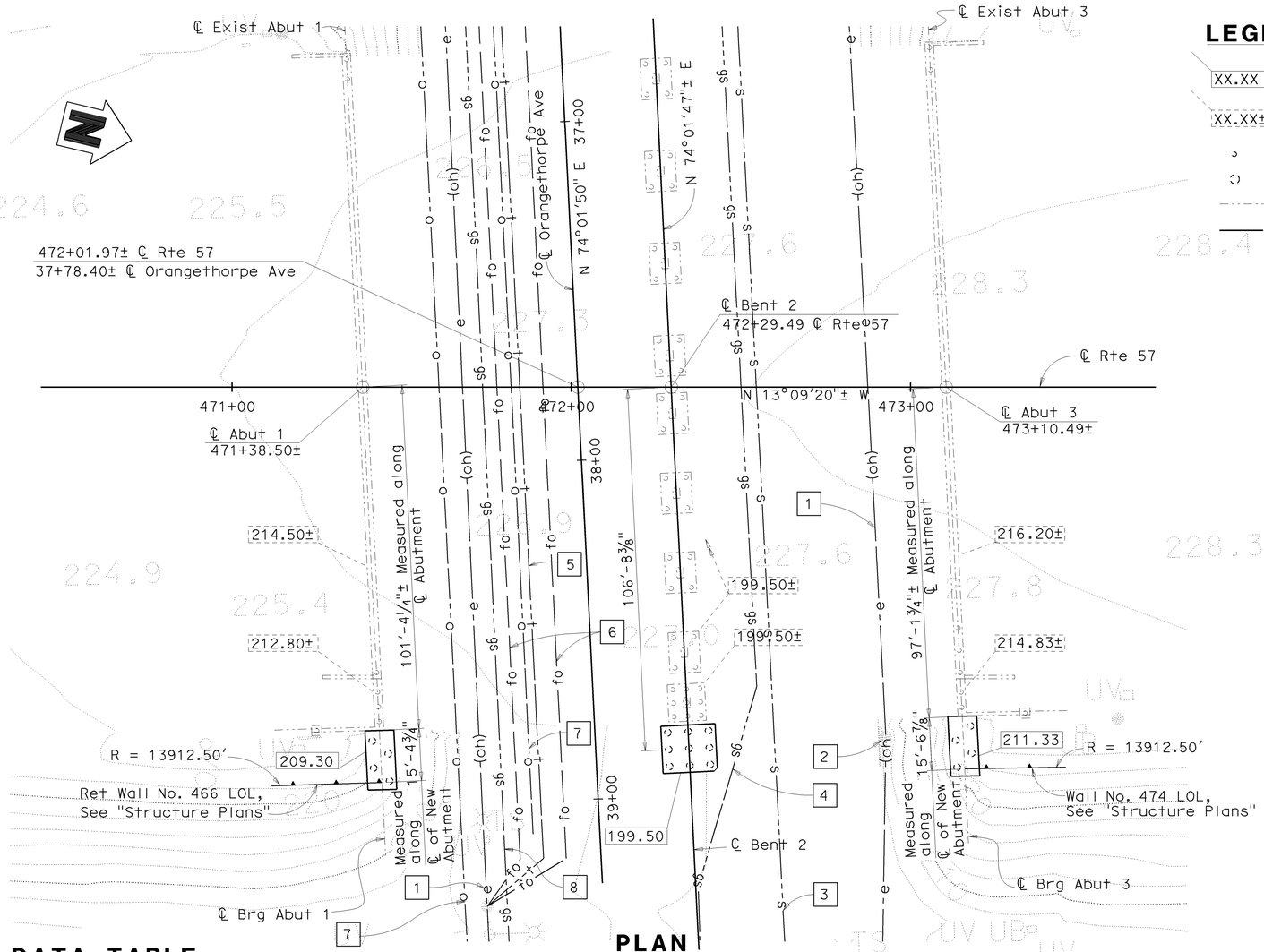

PLAN
1" = 20'

LEGEND

XX.XX	Indicates bottom of footing elevation
XX.XX±	Indicates bottom of Exist footing elevation
	Indicates Existing Piling
	Indicates New Dia CIDH Pile
	Indicates Existing Structure
	Indicates New Structure

NOTES

1. Not All piles are shown.
2. Location of existing structure foundations is approximate.

UTILITY NOTES

1	Exist SCE O.H. So Cal Edison
2	Exist Power Post to be Relocated
3	Exist 10" Sewer Line, City of Fullerton
4	Exist 36" HP Gas, SO CAL GAS
5	Exist PAC Bell Telephone Line AT&T
6	Exist Fiber Optic Line
7	Exist 6" Inactive Texaco Pipe Line
8	Exist 8" HP So Cal Gas

PILE DATA TABLE

Location	Pile Type	Nominal Resistance		Design Tip Elevation (ft)	Specified Tip Elevation (ft)	Nominal Driving Resistance (kips)
		Compression (kips)	Tension (kips)			
Abut 1	24" CIDH	400	0	+168(a) +172(c) +180(d)	+168	N/A
Bent 2	24" CIDH	400	200	+160(a) +171(b) +168(c) +170(d)	+160	N/A
Abut 3	24" CIDH	400	0	+168(a) +172(c) +180(d)	+168	N/A

Note: Design tip elevation is controlled by the following demands:
(a) Compression, (b) Tension, (c) Settlement, (d) Lateral Loads

BASIS OF COORDINATES:

Bearings and Coordinates as shown hereon are in terms of the California Coordinate System of 1983 (CCS83, Epoch 1991.35), Zone 6; based locally upon the following Control Stations as published by the County of Orange:

Name	Northing (ft.)-GRID	Easting (ft.)-GRID
2001 OCS 3282	2247998.84	6069149.29
2017 OCS 0560	2260355.81	6065880.43
2023 OCS 0111	2270990.23	6066809.18

All Coordinates and Distances are in terms of the U.S. Survey Foot, 1 meter = 39.37/12 feet

BENCHMARKS:

Designation: 1L-54-82 Elev = 153.171
Described by OCS 2002 - Found 3 3/4" OCS Aluminum Benchmark Disk Stamped "1L-54-82", set in the Top of a 6 in. by 6 in. Concrete Post. Monument is located along the Westerly Levee of the Santa Ana River, 0.25 Miles Northerly along Levee from the Centerline of Orangewood Avenue, 200 ft. Northeasterly of the Easterly Leg of the Anaheim Angels 200 ft. tall sign, 69 ft. Westerly of the Centerline of the Bike Trail and 1.5 ft. Westerly of a Steel OCS Witness Post. Monument is set 0.3 below the Ground.

Designation: 2G-25-70 Elev = 275.872
Described by OCS 2003 - Found 3 3/4" OCS Aluminum Benchmark Disk Stamped "2G-25-70", set in the Southeasterly Corner of a 4 ft. by 6 ft. Concrete Catch Basin. Monument is Located in the Northwesterly Corner of the Intersection of Yorba Linda Boulevard and Deerpark Drive, 75 ft. Westerly of the Centerline of Deerpark and 46 ft. Northerly of the Centerline of Yorba Linda. Monument is set Level with the Sidewalk.

GEOTECHNICAL PROFESSIONAL 6/15/09 APPROVAL DATE

NOTE:
THE CONTRACTOR SHALL VERIFY ALL CONTROLLING FIELD DIMENSIONS BEFORE ORDERING OR FABRICATING ANY MATERIAL.

Jon Hamaguchi
DESIGN OVERSIGHT
6-24-09
SIGN OFF DATE

SCALE:	VERT.DATUM NAVD 88	HORZ.DATUM CCS83	DESIGN	BY K. Allam/M. Carbuccia	CHECKED Y. Deng
PHOTOGRAMMETRY AS OF: 12-02-2007	ALIGNMENT TIES		DETAILS	BY I. Karkoutli	CHECKED Y. Deng
SURVEYED BY B. Madigan	DRAFTED BY B. Zeman		QUANTITIES	BY L. Khaleghi	CHECKED V. Nong
FIELD CHECKED BY B. Cox	CHECKED BY T. Rai				

PREPARED FOR THE STATE OF CALIFORNIA DEPARTMENT OF TRANSPORTATION

Alaedin Moubayed
PROJECT ENGINEER

BRIDGE NO. 55-0459
POST MILE 16.4

ORANGETHORPE AVE UC (WIDEN)
FOUNDATION PLAN

FOUNDATION PLAN SHEET (ENGLISH) (REV. 2-25-05)

ORIGINAL SCALE IN INCHES FOR REDUCED PLANS 0 1 2 3

CU 12
EA 0F0311

DISREGARD PRINTS BEARING EARLIER REVISION DATES

REVISION DATES (PRELIMINARY STAGE ONLY)

SHEET 5 OF 32

FILE => 55-0459-e-fdp101.dgn

USERNAME => rtrienard DATE PLOTTED => 16-DEC-2009 TIME PLOTTED => 12:46

DIST	COUNTY	ROUTE	POST MILES TOTAL PROJECT	SHEET No	TOTAL SHEETS
12	Ora	57	16.2/18.6	851	960

Khaled Allam 6/15/09
REGISTERED CIVIL ENGINEER DATE

12-14-09
PLANS APPROVAL DATE

REGISTERED PROFESSIONAL ENGINEER Khaled Allam No. 67110 Exp. 9/30/10 CIVIL STATE OF CALIFORNIA

The State of California or its officers or agents shall not be responsible for the accuracy or completeness of electronic copies of this plan sheet.

OCTA
550 SOUTH MAIN STREET
ORANGE, CA 92863

PBS&J
625 THE CITY DRIVE SOUTH, SUITE 200
ORANGE, CA 92868

LEGEND

- Closure Pour
- Bridge Removal (Portion)
- Indicates Existing Structure
- Indicates New Structure

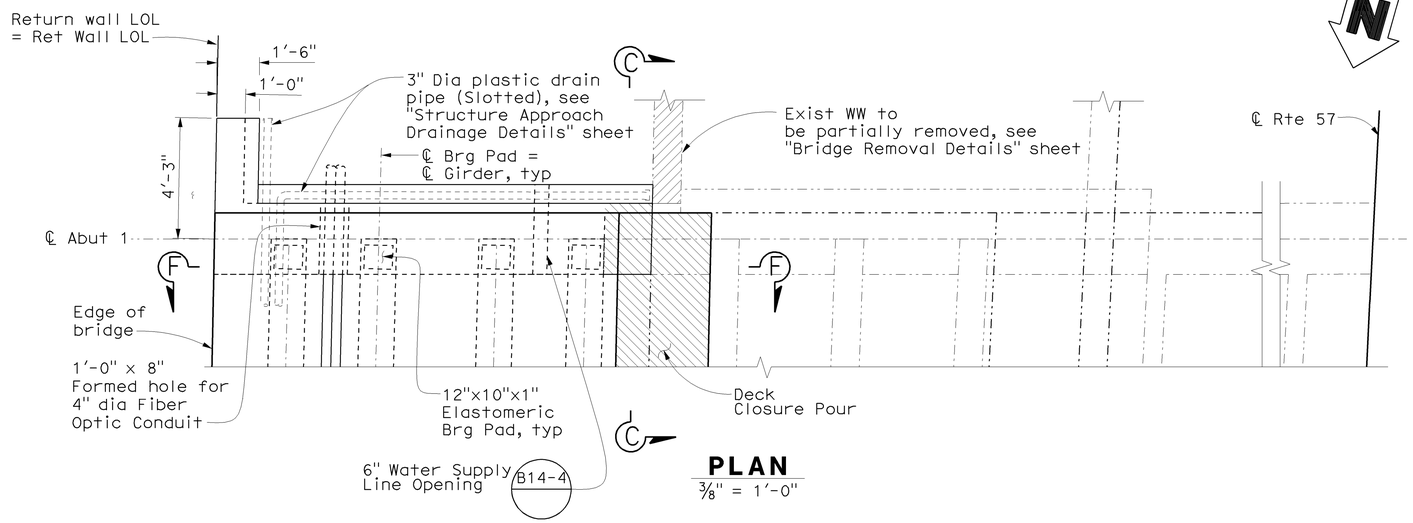

PLAN
3/8" = 1'-0"

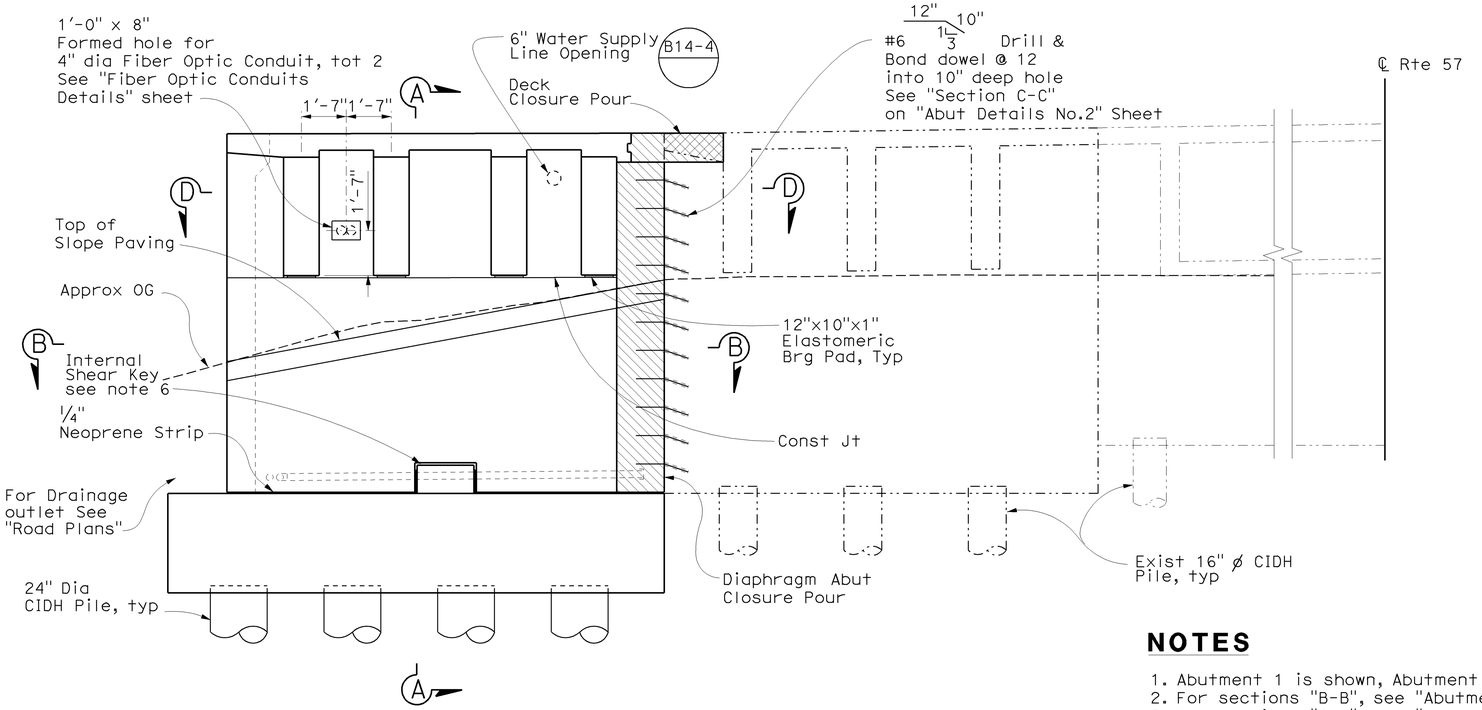

ELEVATION
3/8" = 1'-0"

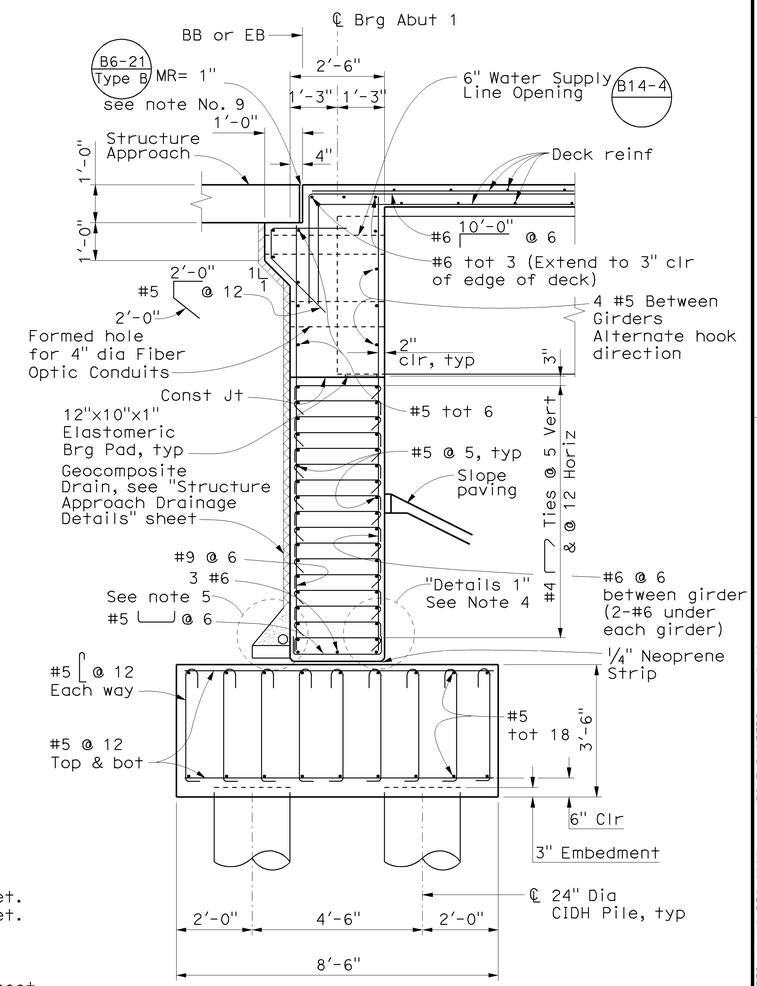

SECTION A-A
1/2" = 1'-0"

NOTES

1. Abutment 1 is shown, Abutment 3 similar.
2. For sections "B-B", see "Abutment Details No. 1" sheet.
3. For sections "C-C", see "Abutment Details No. 2" sheet.
4. For "Detail 1", see "Abutment Details No. 2" sheet.
5. See "Drainage Details" on "Structure Approach Drainage Details" sheet.
6. For Shear Key detail, see" Abutment Details No. 2" sheet.
7. For Abutment removal details, see "Bridge Removal Details" sheet.
8. For section "F-F", see "Bent Details No. 1" sheet.
9. Contractor to use Joint Seal type to match existing.

NOTE:
THE CONTRACTOR SHALL VERIFY ALL CONTROLLING FIELD DIMENSIONS BEFORE ORDERING OR FABRICATING ANY MATERIAL.

Jon Hamaguchi
DESIGN OVERSIGHT Jon Hamaguchi
6-24-09
SIGN OFF DATE

	BY	CHECKED
DESIGN	K. Allam/M. Carbuccia	S. Weggily/Y. Deng
DETAILS	I. Karkoutli	S. Weggily/Y. Deng
QUANTITIES	L. Khaleghi	V. Nong

PREPARED FOR THE STATE OF CALIFORNIA DEPARTMENT OF TRANSPORTATION

Alaedin Moubayed
PROJECT ENGINEER

BRIDGE NO. 55-0459
POST MILE 16.4

ORANGETHORPE AVE UC (WIDEN)
ABUTMENT LAYOUT

DESIGN DETAIL SHEET (ENGLISH) (REV. 2/25/05)

ORIGINAL SCALE IN INCHES FOR REDUCED PLANS 0 1 2 3

CU 12
EA 0F0311

DISREGARD PRINTS BEARING EARLIER REVISION DATES

REVISION DATES (PRELIMINARY STAGE ONLY)

SHEET 6 OF 32

FILE => 55-0459-f-a01_1o1.dgn

USERNAME => trlenard DATE PLOTTED => 16-DEC-2009 TIME PLOTTED => 12:46

DIST	COUNTY	ROUTE	POST MILES TOTAL PROJECT	SHEET No	TOTAL SHEETS
12	Ora	57	16.2/18.6	852	960

Khaled Allam 6/15/09
REGISTERED CIVIL ENGINEER DATE

12-14-09
PLANS APPROVAL DATE

REGISTERED PROFESSIONAL ENGINEER Khaled Allam No. 67110 Exp. 9/30/10 CIVIL STATE OF CALIFORNIA

The State of California or its officers or agents shall not be responsible for the accuracy or completeness of electronic copies of this plan sheet.

OCTA
550 SOUTH MAIN STREET
ORANGE, CA 92863

PBS&J
625 THE CITY DRIVE SOUTH, SUITE 200
ORANGE, CA 92868

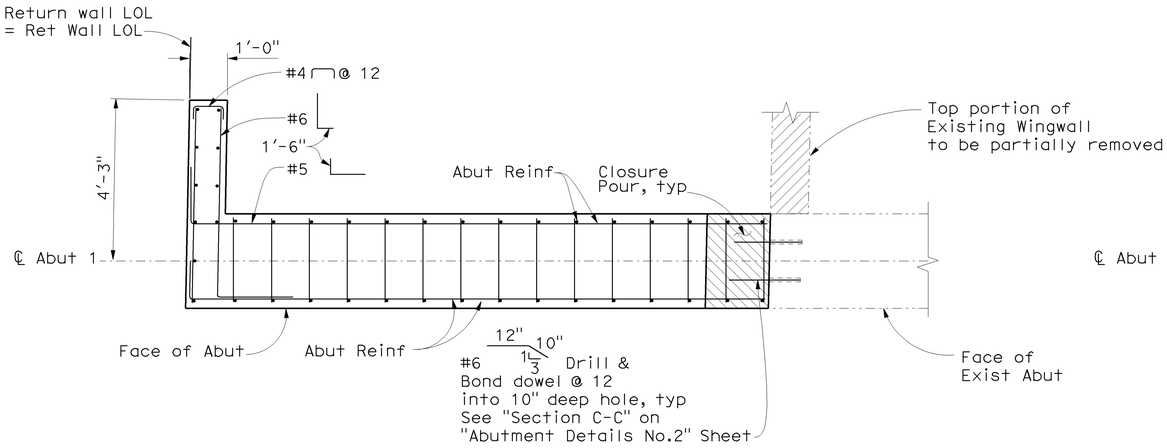

SECTION B-B

½" = 1'-0"

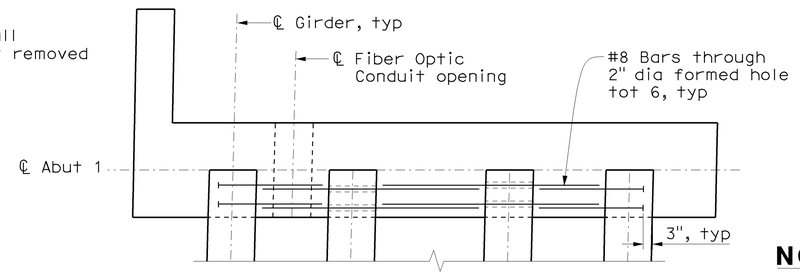

SECTION D-D

½" = 1'-0"

NOTES

1. Abutment 1 is shown, Abutment 3 is similar.
2. For section "E-E", see "Abutment Details No. 2" sheet.
3. No two adjacent piles can be constructed concurrently.

LEGEND

- Indicates Closure Pour
- Indicates Bridge Removal (Portion)
- Indicates ½" Neoprene Strip
- Indicates Existing Structure
- Indicates New Structure

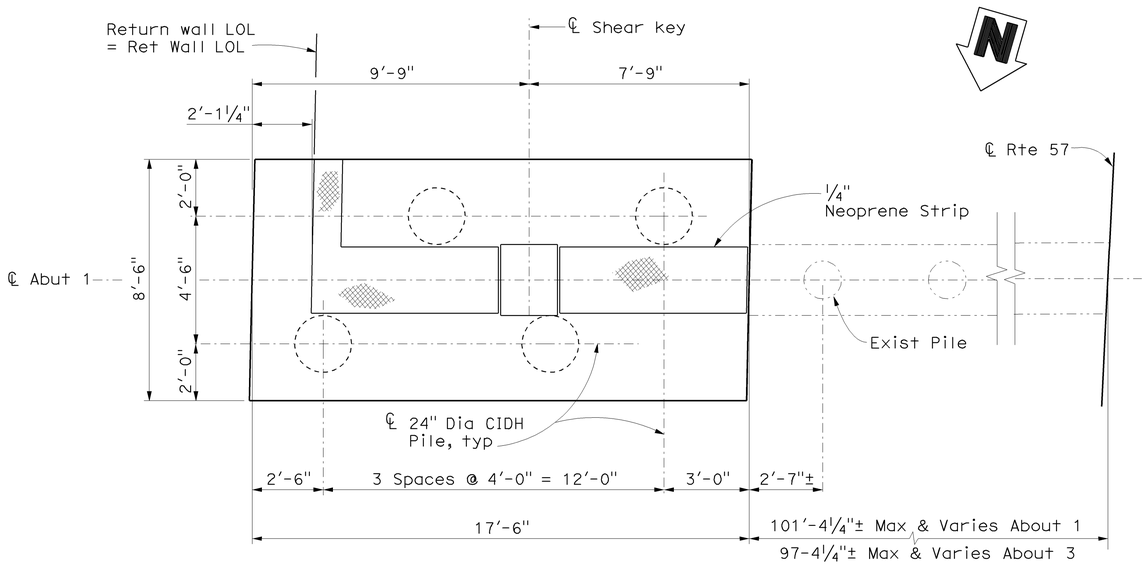

PILES LAYOUT

⅜" = 1'-0"

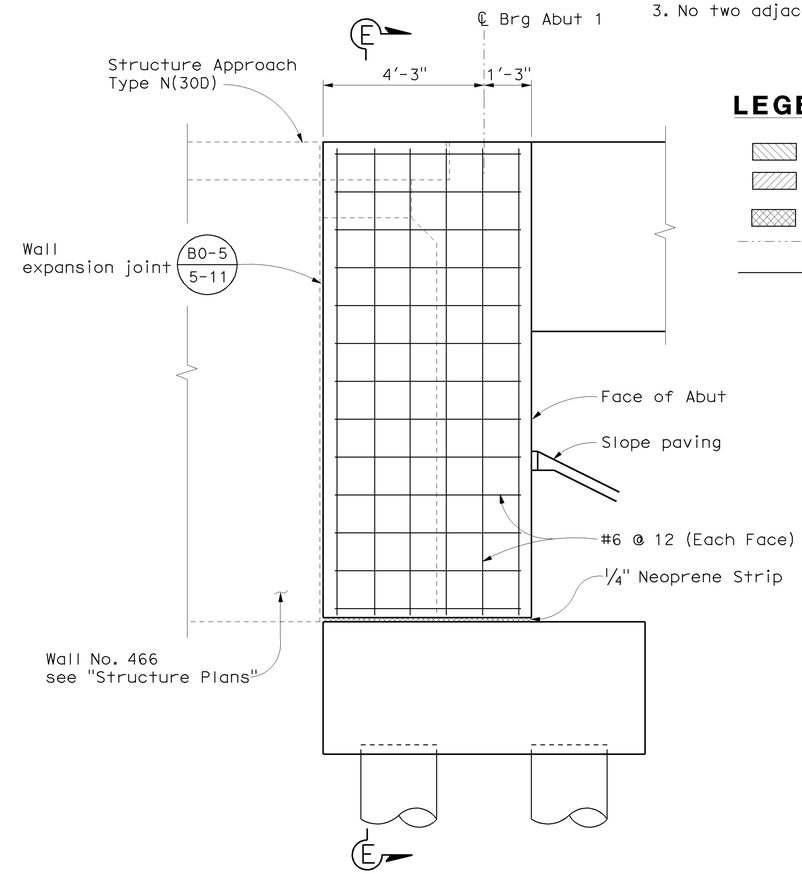

RETURN WALL ELEVATION

½" = 1'-0"

NOTE:
THE CONTRACTOR SHALL VERIFY ALL CONTROLLING FIELD DIMENSIONS BEFORE ORDERING OR FABRICATING ANY MATERIAL.

Jon Hamaguchi
DESIGN OVERSIGHT
6-24-09
SIGN OFF DATE

	BY	CHECKED
DESIGN	K. Allam/M. Carbuccia	Y. Deng
DETAILS	I. Karkoutli	Y. Deng
QUANTITIES	L. Khaleghi	V. Nong

PREPARED FOR THE STATE OF CALIFORNIA DEPARTMENT OF TRANSPORTATION

Alaedin Moubayed
PROJECT ENGINEER

BRIDGE NO. 55-0459
POST MILE 16.4

ORANGETHORPE AVE UC (WIDEN)
ABUTMENT DETAILS NO. 1

DESIGN DETAIL SHEET (ENGLISH) (REV. 2/25/05)

ORIGINAL SCALE IN INCHES FOR REDUCED PLANS 0 1 2 3

CU 12
EA 0F0311

DISREGARD PRINTS BEARING EARLIER REVISION DATES

REVISION DATES (PRELIMINARY STAGE ONLY)

SHEET 7 OF 32

FILE => 55-0459-f-a01dt01.dgn

USERNAME => trlenard DATE PLOTTED => 16-DEC-2009 TIME PLOTTED => 12:46

DIST	COUNTY	ROUTE	POST MILES TOTAL PROJECT	SHEET No	TOTAL SHEETS
12	Ora	57	16.2/18.6	853	960

Khaled Allam 6/15/09
REGISTERED CIVIL ENGINEER DATE

12-14-09
PLANS APPROVAL DATE

REGISTERED PROFESSIONAL ENGINEER Khaled Allam No. 67110 Exp. 9/30/10 CIVIL STATE OF CALIFORNIA

The State of California or its officers or agents shall not be responsible for the accuracy or completeness of electronic copies of this plan sheet.

OCTA
550 SOUTH MAIN STREET
ORANGE, CA 92863

PBS&J
625 THE CITY DRIVE SOUTH, SUITE 200
ORANGE, CA 92868

LEGEND

- Indicates Bridge Removal (Portion)
- Indicates 1/4" Neoprene Strip
- Indicates Existing Structure
- Indicates New Structure

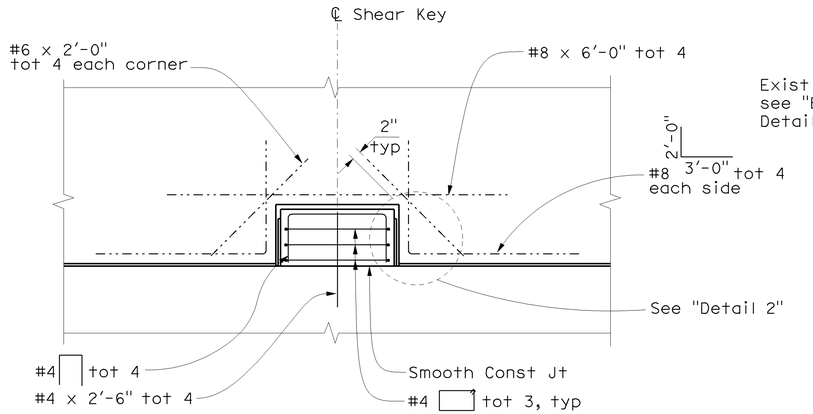

DIAPHRAGM DETAIL AT SHEAR KEY

3/4" = 1'-0"

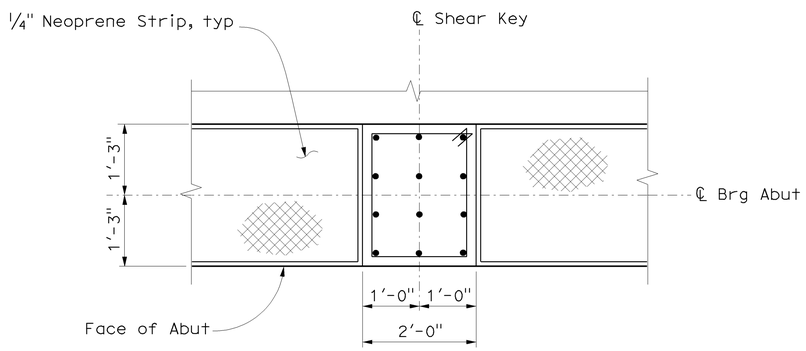

PLAN

3/4" = 1'-0"

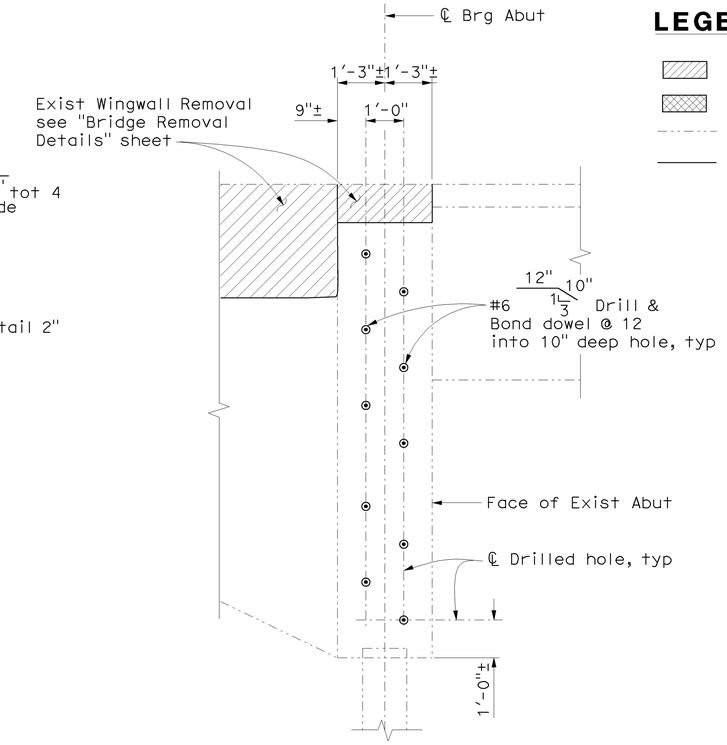

SECTION C-C

1/2" = 1'-0"

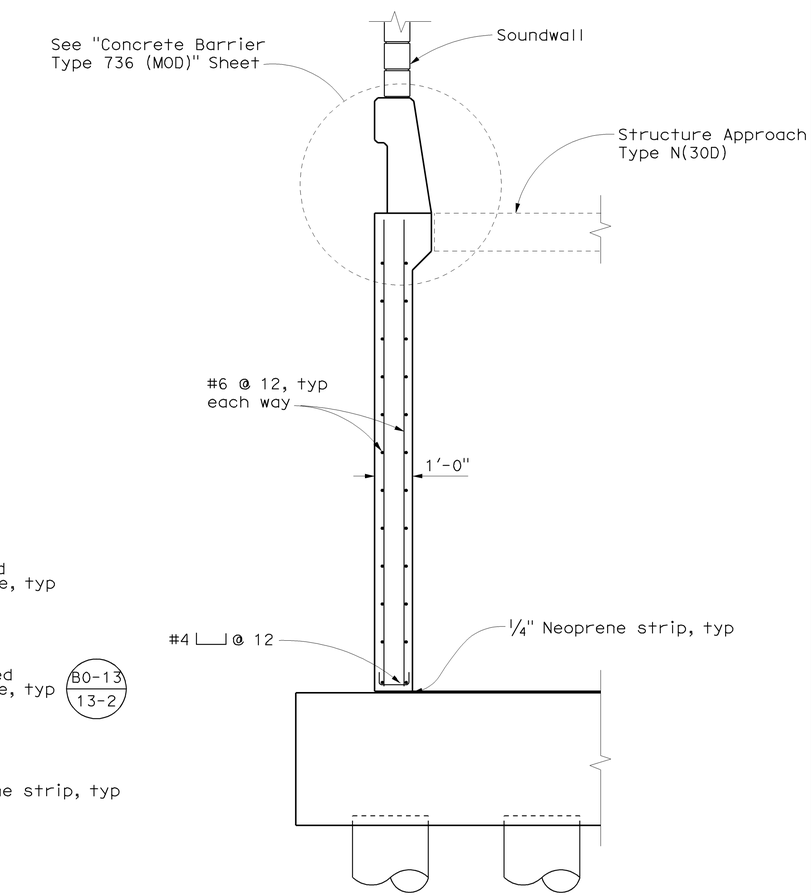

SECTION E-E

1/2" = 1'-0"

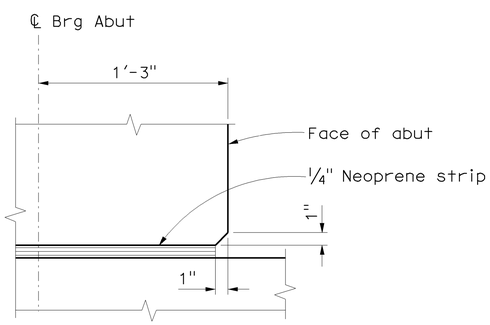

DETAIL 1

No Scale

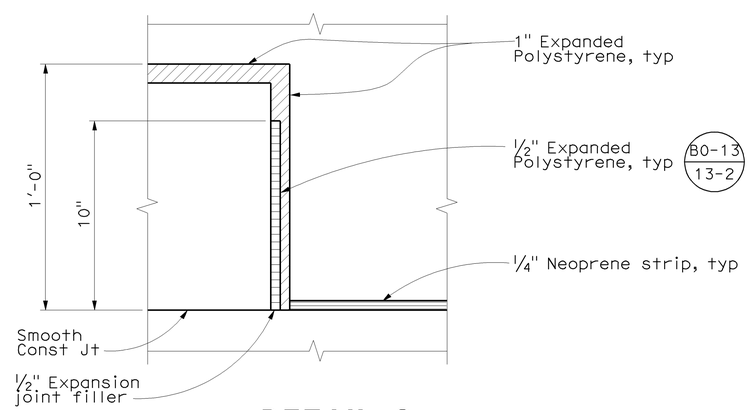

DETAIL 2

No Scale

NOTE:
THE CONTRACTOR SHALL VERIFY ALL CONTROLLING FIELD DIMENSIONS BEFORE ORDERING OR FABRICATING ANY MATERIAL.

Jon Hanaguchi
DESIGN OVERSIGHT Jon Hanaguchi
6-24-09
SIGN OFF DATE

	BY	CHECKED
DESIGN	K. Allam/M. Carbuccia	Y. Deng
DETAILS	I. Karkoutli	Y. Deng
QUANTITIES	L. Khaleghi	V. Nong

PREPARED FOR THE STATE OF CALIFORNIA DEPARTMENT OF TRANSPORTATION

Alaedin Moubayed
PROJECT ENGINEER

BRIDGE NO. 55-0459
POST MILE 16.4

ORANGETHORPE AVE UC (WIDEN)
ABUTMENT DETAILS NO. 2

DESIGN DETAIL SHEET (ENGLISH) (REV. 2/25/05)

ORIGINAL SCALE IN INCHES FOR REDUCED PLANS 0 1 2 3

CU 12
EA 0F0311

DISREGARD PRINTS BEARING EARLIER REVISION DATES

REVISION DATES (PRELIMINARY STAGE ONLY)

SHEET 8 OF 32

FILE => 55-0459-f-a01dt02.dgn

USERNAME => rfrehard DATE PLOTTED => 16-DEC-2009 TIME PLOTTED => 12:46

DIST	COUNTY	ROUTE	POST MILES TOTAL PROJECT	SHEET No	TOTAL SHEETS
12	Ora	57	16.2/18.6	854	960

Khaled Allam 6/15/09
REGISTERED CIVIL ENGINEER DATE

12-14-09
PLANS APPROVAL DATE

REGISTERED PROFESSIONAL ENGINEER Khaled Allam No. 67110 Exp. 9/30/10 CIVIL STATE OF CALIFORNIA

The State of California or its officers or agents shall not be responsible for the accuracy or completeness of electronic copies of this plan sheet.

OCTA
550 SOUTH MAIN STREET
ORANGE, CA 92863

PBS&J
625 THE CITY DRIVE SOUTH, SUITE 200
ORANGE, CA 92868

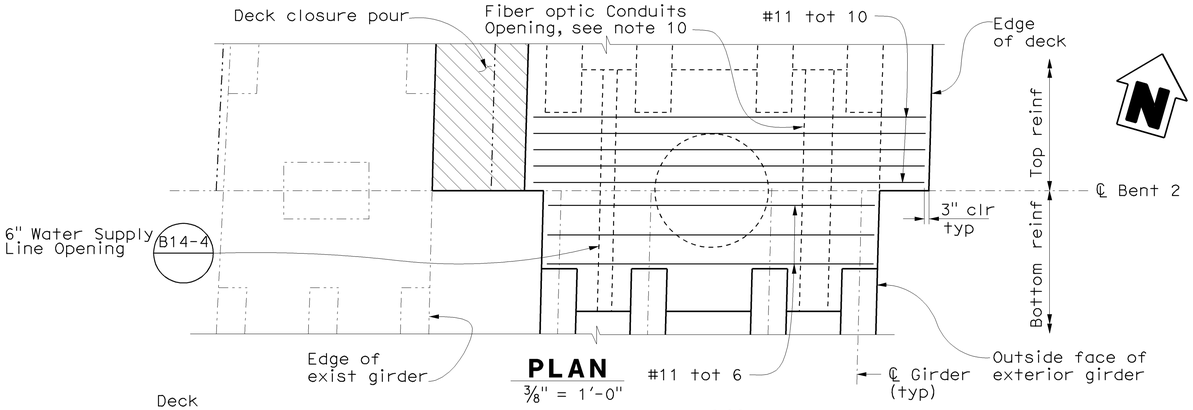

PLAN
3/8" = 1'-0"

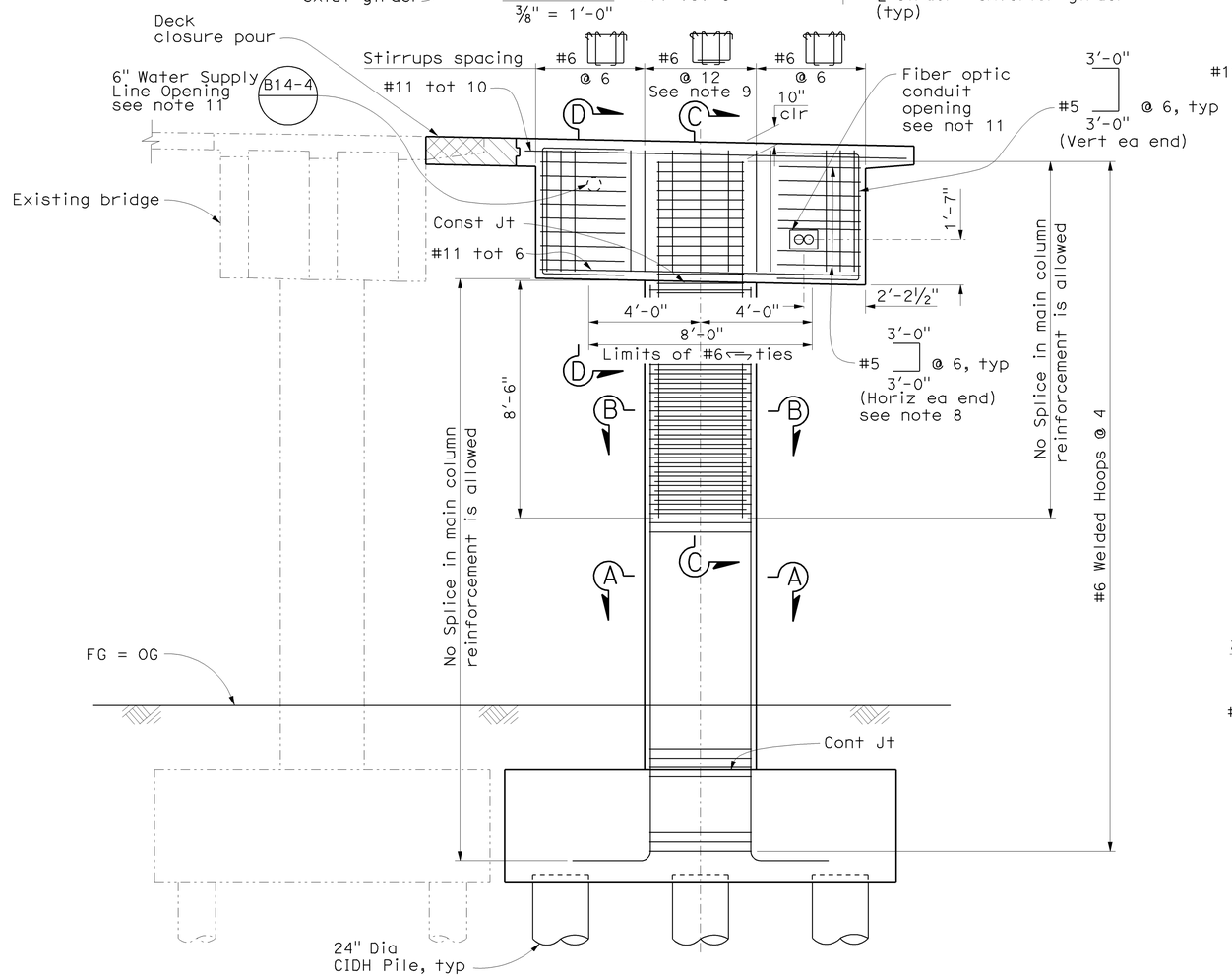

ELEVATION
3/8" = 1'-0"

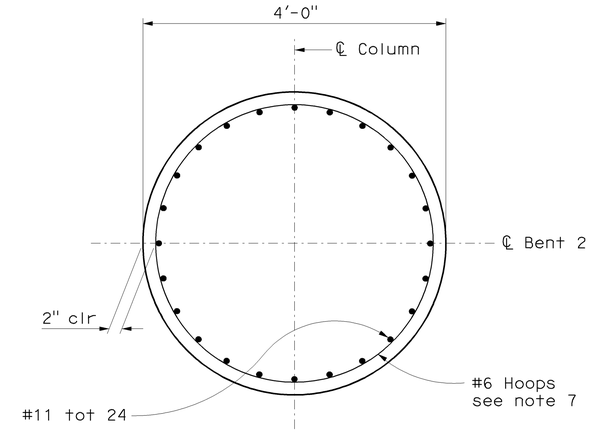

SECTION A-A
1" = 1'-0"

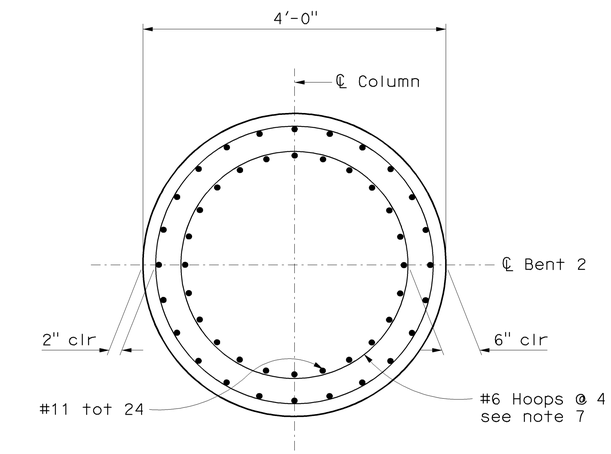

SECTION B-B
1" = 1'-0"

NOTES:

1. For deck slab reinf, see "Typical Section" sheet.
2. For section "C-C", see "Bent Details No. 1" sheet.
3. For section "D-D", see "Bent Details No. 2" sheet.
4. Place Stirrups reinf normal to & space along ℄ Bent.
5. No splice allowed in column and bent cap reinf.
6. For column footing and pile layout, see "Bent Details No. 2" sheet.
7. All hoops shall be butt welded Continuos and meet "Ultimate butt Splice" requirements.
8. Clear #5 @ 6 to accommodate utility opening.
9. Stirrups leg shall be lap spliced min 4'-6".
10. See "Fiber Optic Conduits Details" sheet.
11. Contractor should adjust rebars to provide 1" min clearance from opening.

LEGEND

- Indicates Bridge removal (Portion)
- Indicates Closure Pour
- Indicates Existing structure
- Indicates New Structure

NOTE:
THE CONTRACTOR SHALL VERIFY ALL CONTROLLING FIELD DIMENSIONS BEFORE ORDERING OR FABRICATING ANY MATERIAL.

Jon Hamaguchi
DESIGN OVERSIGHT Jon Hamaguchi
6-24-09
SIGN OFF DATE

	BY	CHECKED
DESIGN	K. Allam/M. Carbuccia	S. Megally/Y. Deng
DETAILS	I. Karkoutli	S. Megally/Y. Deng
QUANTITIES	L. Khaleghi	V. Nong

PREPARED FOR THE STATE OF CALIFORNIA DEPARTMENT OF TRANSPORTATION

Alaedin Moubayed
PROJECT ENGINEER

BRIDGE NO. 55-0459
POST MILE 16.4

ORANGETHORPE AVE UC (WIDEN)
BENT LAYOUT

DESIGN DETAIL SHEET (ENGLISH) (REV. 2/25/05)

ORIGINAL SCALE IN INCHES FOR REDUCED PLANS 0 1 2 3

CU 12
EA 0F0311

DISREGARD PRINTS BEARING EARLIER REVISION DATES

REVISION DATES (PRELIMINARY STAGE ONLY)

SHEET 9 OF 32

FILE => 55-0459-h-b01_1o01.dgn

USERNAME => trlenard DATE PLOTTED => 16-DEC-2009 TIME PLOTTED => 12:46

DIST	COUNTY	ROUTE	POST MILES TOTAL PROJECT	SHEET No	TOTAL SHEETS
12	Ora	57	16.2/18.6	855	960

Khaled Allam 6/15/09
REGISTERED CIVIL ENGINEER DATE

12-14-09
PLANS APPROVAL DATE

REGISTERED PROFESSIONAL ENGINEER Khaled Allam No. 67110 Exp. 9/30/10 CIVIL STATE OF CALIFORNIA

The State of California or its officers or agents shall not be responsible for the accuracy or completeness of electronic copies of this plan sheet.

OCTA
550 SOUTH MAIN STREET
ORANGE, CA 92863

PBS&J
625 THE CITY DRIVE SOUTH, SUITE 200
ORANGE, CA 92868

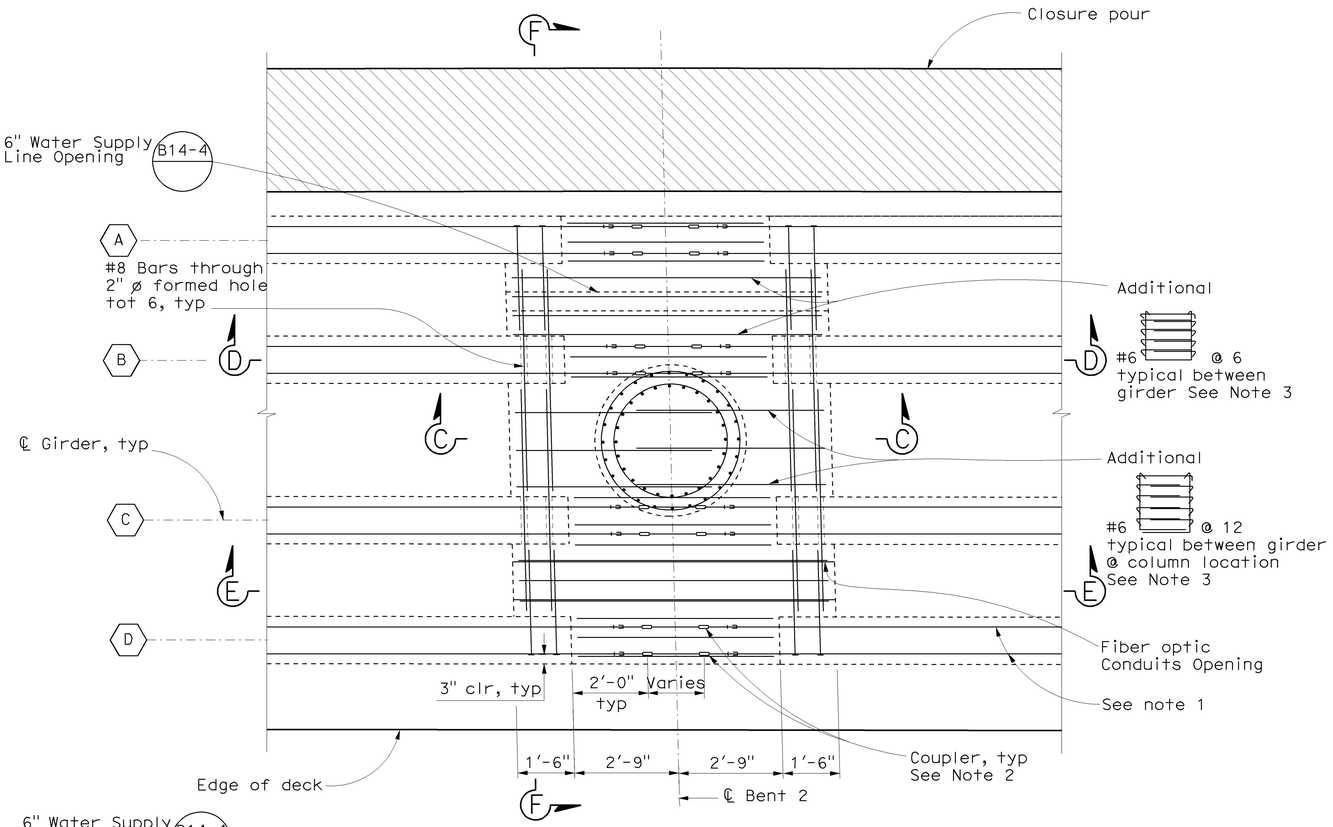

BENT REINFORCEMENT PLAN

½" = 1'-0"

NOTES:

1. For girder reinf callout, see "Precast Girder Details No. 1, 2 & 3" sheets.
2. Contractor shall field measure the distance between ends of girders after erection in order to fabricate the appropriate length to be coupled. Adjust accordingly, if distance between ends of girders vary in different locations.
3. Bent cap top & Bottom reinf and stirrups are not shown for clarity.
4. Roughen all girders surfaces inside bent cap.
5. For Section D-D & E-E, See "Bent Details No. 2" Sheet.
6. Vertical stirrups are not shown for clarity.
7. Section at bent 2 is shown, section at Abut 1 & 3 are similar.
8. #8 x 5'-6" dowels placed through 2" dia holes formed in girder pressure grout hole after rebar placement total 3 per girder (at intermediat diaphragm for girder (B) & (C) and total 6 at end diaphragm).

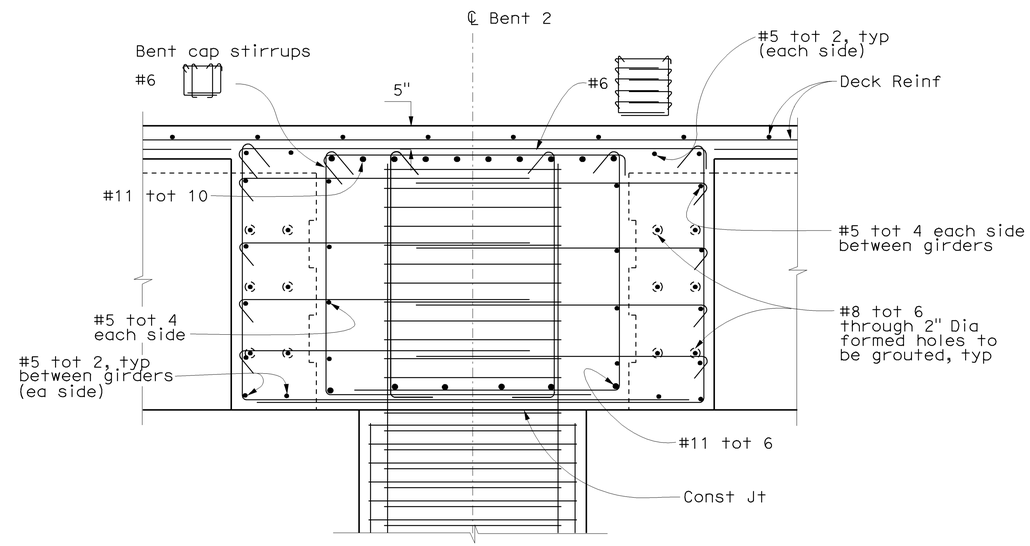

SECTION C-C

¾" = 1'-0"

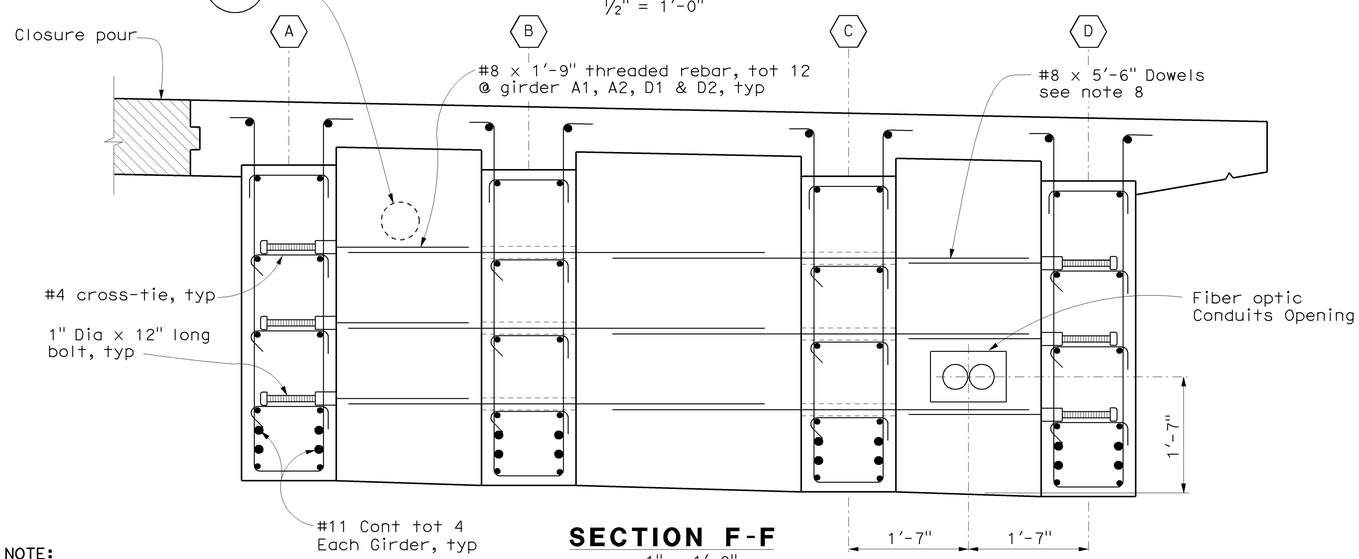

SECTION F-F

1" = 1'-0"

NOTE:
THE CONTRACTOR SHALL VERIFY ALL CONTROLLING FIELD DIMENSIONS BEFORE ORDERING OR FABRICATING ANY MATERIAL.

DIRECTION FOR CONSTRUCTION

1. Erect girder line (A) first.
2. Thread 1" dia x 1'-0" long bolts in place.
3. Erect the adjacent girder line (B).
4. Slide #8 bars in place.
5. Repeat steps 3 & 4.
6. Erect girder like (D) last and thread 1" dia x 1'-0" long bolts in place.

Jon Hamaguchi
DESIGN OVERSIGHT Jon Hamaguchi
6-24-09
SIGN OFF DATE

	BY	CHECKED
DESIGN	K. Allam/M. Carbuccia	S. Megally/Y. Deng
DETAILS	I. Karkoutli	S. Megally/Y. Deng
QUANTITIES	L. Khaleghi	V. Nong

PREPARED FOR THE STATE OF CALIFORNIA DEPARTMENT OF TRANSPORTATION

Alaedin Moubayed
PROJECT ENGINEER

BRIDGE NO. 55-0459
POST MILE 16.4

ORANGETHORPE AVE UC (WIDEN)
BENT DETAILS NO. 1

DESIGN DETAIL SHEET (ENGLISH) (REV. 2/25/05)

ORIGINAL SCALE IN INCHES FOR REDUCED PLANS 0 1 2 3

CU 12
EA 0F0311

DISREGARD PRINTS BEARING EARLIER REVISION DATES

REVISION DATES (PRELIMINARY STAGE ONLY)

SHEET 10 OF 32

FILE => 55-0459-h-b01dt01.dgn

USERNAME => trlenard DATE PLOTTED => 16-DEC-2009 TIME PLOTTED => 12:46

DIST	COUNTY	ROUTE	POST MILES TOTAL PROJECT	SHEET No	TOTAL SHEETS
12	Ora	57	16.2/18.6	856	960

Khaled Allam 6/15/09
REGISTERED CIVIL ENGINEER DATE

12-14-09
PLANS APPROVAL DATE

REGISTERED PROFESSIONAL ENGINEER Khaled Allam No. 67110 Exp. 9/30/10 CIVIL STATE OF CALIFORNIA

The State of California or its officers or agents shall not be responsible for the accuracy or completeness of electronic copies of this plan sheet.

OCTA
550 SOUTH MAIN STREET
ORANGE, CA 92863

PBS&J
625 THE CITY DRIVE SOUTH, SUITE 200
ORANGE, CA 92868

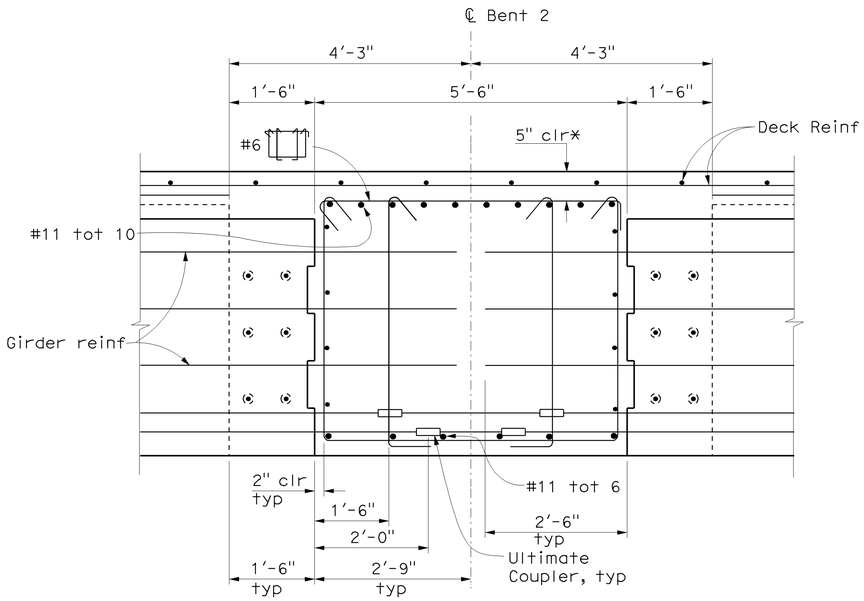

SECTION D-D
3/4" = 1'-0"

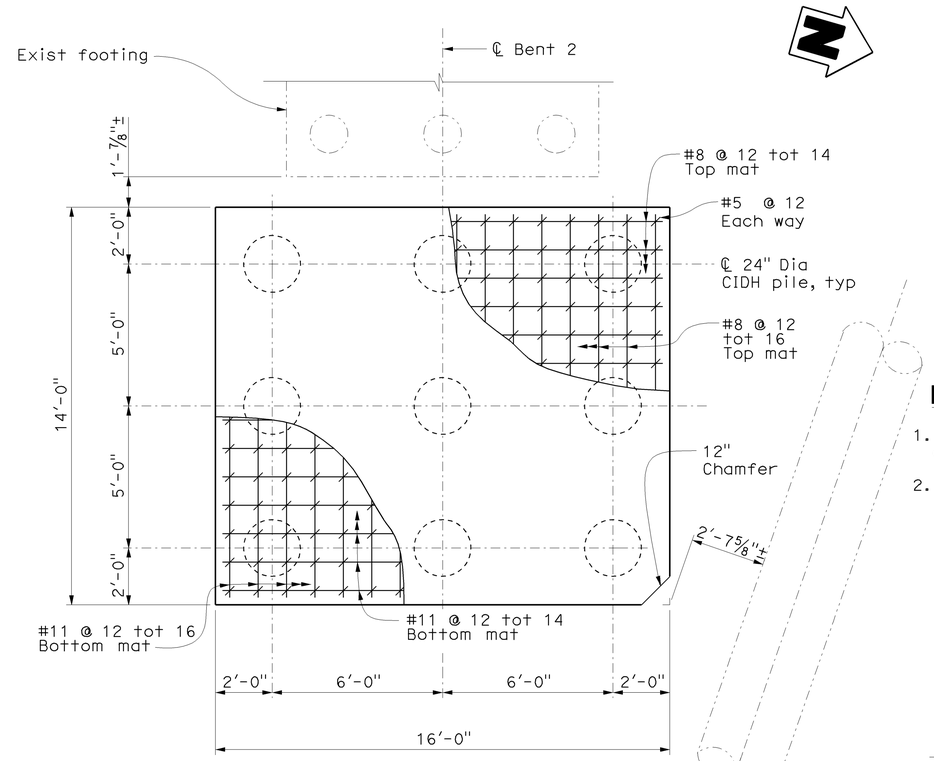

FOOTING PLAN
3/8" = 1'-0"

NOTES

1. No two adjacent pile can be constructed concurrently.
2. AT Bent 2, the row of piles adjacent to the existing gas line shall be constructed before excavation. Pothole in 3 locations using vacuum extraction method to expose and locate the gas line. Use vacuum extraction to evacuate the area of the CIDH piles to an elevation 1'-0" below the gas line. Prior to drilling and construction of CIDH piles, place a metal plate over the potholes. Complete footing work using vacuum extraction for any excavation within 2'-0" of the existing gas line.

LEGEND

- * Indicates Clearance to main cap Reinf
- Indicates Existing Structure
- Indicates New Structure
- Indicates headed reinforcement

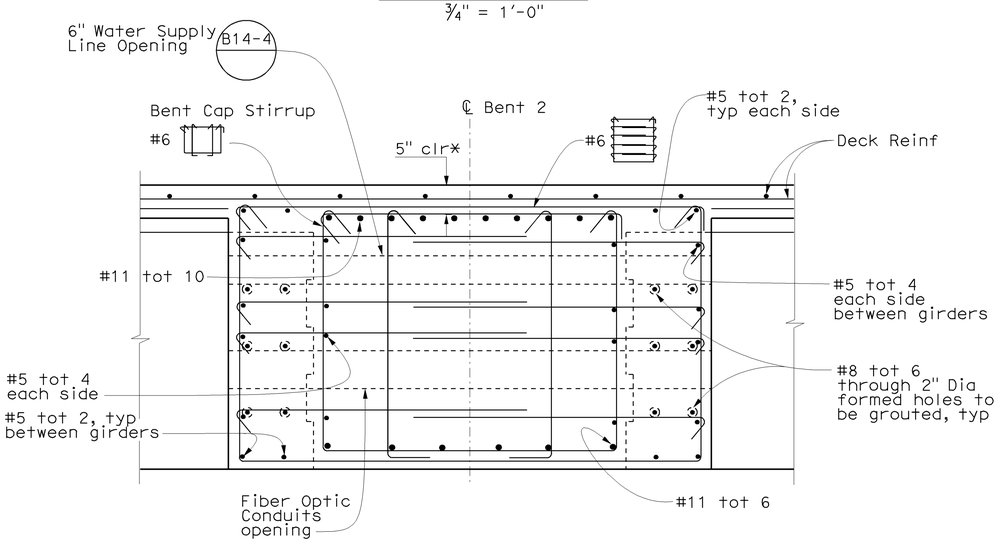

SECTION E-E
3/4" = 1'-0"

NOTE:

For information not shown, see Section C-C on "Bent Details No. 1" sheet.

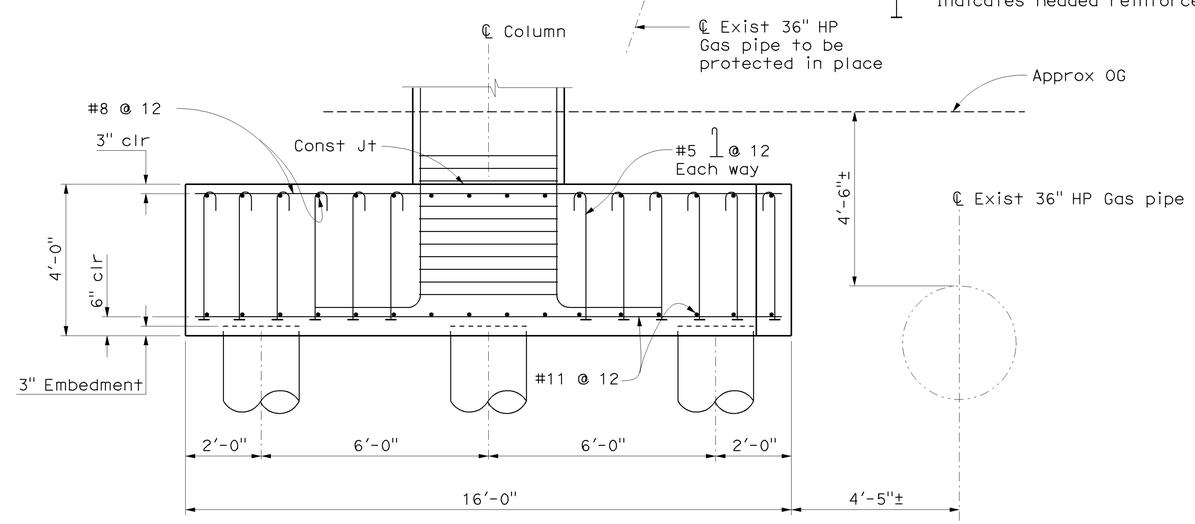

FOOTING ELEVATION
1/2" = 1'-0"

NOTE:
THE CONTRACTOR SHALL VERIFY ALL CONTROLLING FIELD DIMENSIONS BEFORE ORDERING OR FABRICATING ANY MATERIAL.

Jon Hamaguchi
DESIGN OVERSIGHT Jon Hamaguchi
6-24-09
SIGN OFF DATE

	BY	CHECKED
DESIGN	K. Allam/M. Carbuccia	S. Megally/Y. Deng
DETAILS	I. Karkoutli	S. Megally/Y. Deng
QUANTITIES	L. Khaleghi	V. Nong

PREPARED FOR THE STATE OF CALIFORNIA DEPARTMENT OF TRANSPORTATION

Alaedin Moubayed
PROJECT ENGINEER

BRIDGE NO. 55-0459
POST MILE 16.4

ORANGETHORPE AVE UC (WIDEN)
BENT DETAILS NO. 2

DESIGN DETAIL SHEET (ENGLISH) (REV. 2/25/05)

ORIGINAL SCALE IN INCHES FOR REDUCED PLANS 0 1 2 3

CU 12
EA 0F0311

DISREGARD PRINTS BEARING EARLIER REVISION DATES

REVISION DATES (PRELIMINARY STAGE ONLY)

SHEET 11 OF 32

FILE => 55-0459-h-b01dt02.dgn

USERNAME => trlenard DATE PLOTTED => 16-DEC-2009 TIME PLOTTED => 12:46

DIST	COUNTY	ROUTE	POST MILES TOTAL PROJECT	SHEET No	TOTAL SHEETS
12	Ora	57	16.2/18.6	857	960

Khaled Allam 6/15/09
REGISTERED CIVIL ENGINEER DATE

12-14-09
PLANS APPROVAL DATE

REGISTERED PROFESSIONAL ENGINEER Khaled Allam No. 67110 Exp. 9/30/10 CIVIL STATE OF CALIFORNIA

The State of California or its officers or agents shall not be responsible for the accuracy or completeness of electronic copies of this plan sheet.

OCTA
550 SOUTH MAIN STREET
ORANGE, CA 92863

PBS&J
625 THE CITY DRIVE SOUTH, SUITE 200
ORANGE, CA 92868

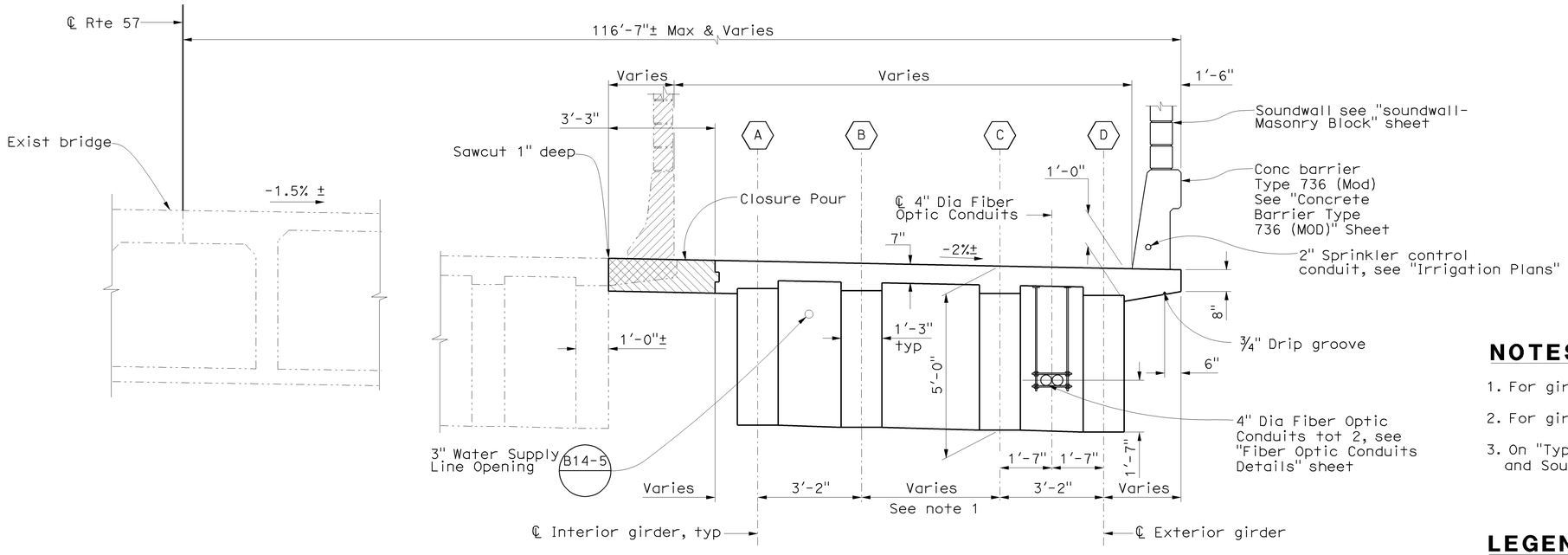

TYPICAL SECTION

½" = 1'-0"

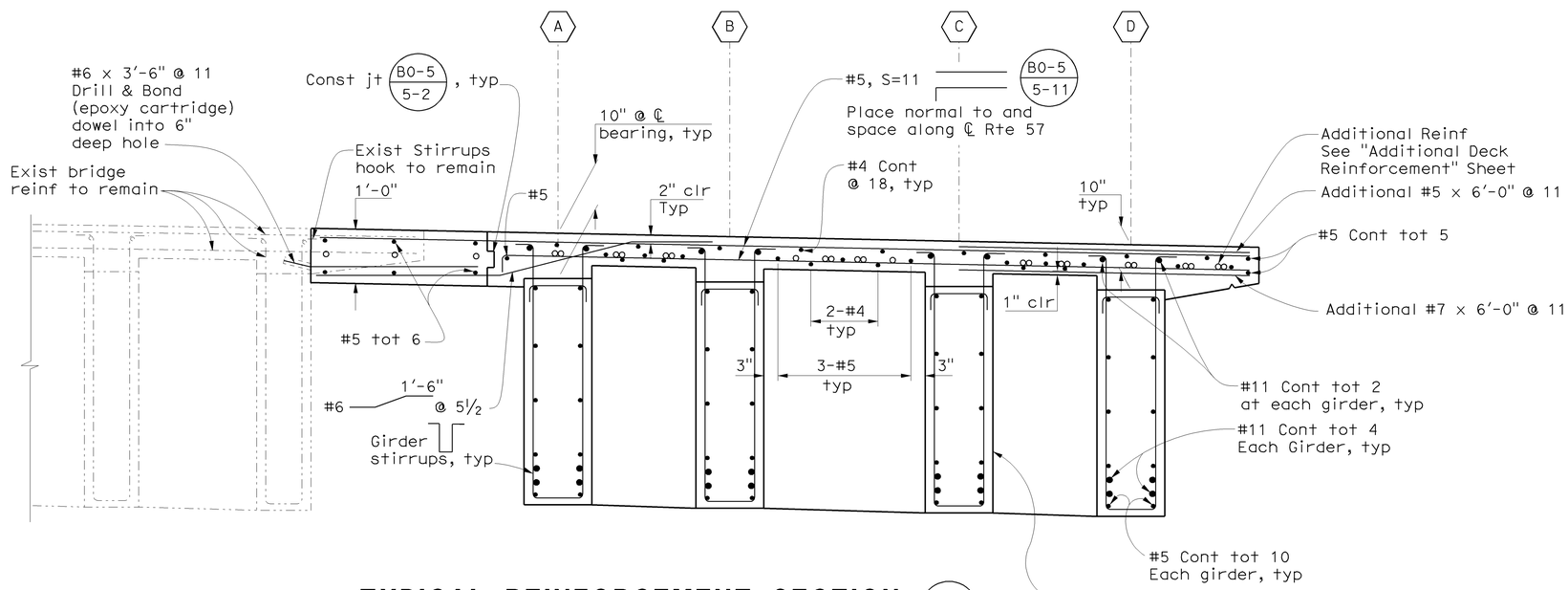

TYPICAL REINFORCEMENT SECTION B0-5

¾" = 1'-0"

NOTES:

1. For girder spacing, see "Girder Layout" sheet.
2. For girder Details, see "Precast Girder Details" sheets.
3. On "Typical Reinforcement Section" exist Barrier and Sound Wall are not shown for clarity.

LEGEND

- Indicates Closure Pour
- Indicates Bridge Removal (Portion)
- Indicates Existing Structure
- Indicates New Structure
- Indicates Additional Reinforcement

NOTE:
THE CONTRACTOR SHALL VERIFY ALL CONTROLLING FIELD DIMENSIONS BEFORE ORDERING OR FABRICATING ANY MATERIAL.

Jon Hamaguchi
DESIGN OVERSIGHT
6-24-09
SIGN OFF DATE

	BY	CHECKED
DESIGN	K. Allam/M. Carbuccia	S. Megally/Y. Deng
DETAILS	I. Karkoutli	S. Megally/Y. Deng
QUANTITIES	L. Khaleghi	V. Nong

PREPARED FOR THE STATE OF CALIFORNIA DEPARTMENT OF TRANSPORTATION

Alaedin Moubayed
PROJECT ENGINEER

BRIDGE NO. 55-0459
POST MILE 16.4

ORANGETHORPE AVE UC (WIDEN)
TYPICAL SECTION

DESIGN DETAIL SHEET (ENGLISH) (REV. 2/25/05)

ORIGINAL SCALE IN INCHES FOR REDUCED PLANS 0 1 2 3

CU 12
EA 0F0311

DISREGARD PRINTS BEARING EARLIER REVISION DATES

REVISION DATES (PRELIMINARY STAGE ONLY)

SHEET 12 OF 32

FILE => 55-0459-k-ts01.dgn

USERNAME => friehard DATE PLOTTED => 16-DEC-2009 TIME PLOTTED => 12:54

DIST	COUNTY	ROUTE	POST MILES TOTAL PROJECT	SHEET No	TOTAL SHEETS
12	Ora	57	16.2/18.6	858	960

Khaled Allam 6/15/09
REGISTERED CIVIL ENGINEER DATE

12-14-09
PLANS APPROVAL DATE

REGISTERED PROFESSIONAL ENGINEER
Khaled Allam
No. 67110
Exp. 9/30/10
CIVIL
STATE OF CALIFORNIA

The State of California or its officers or agents shall not be responsible for the accuracy or completeness of electronic copies of this plan sheet.

OCTA
550 SOUTH MAIN STREET
ORANGE, CA 92863

PBS&J
625 THE CITY DRIVE SOUTH, SUITE 200
ORANGE, CA 92868

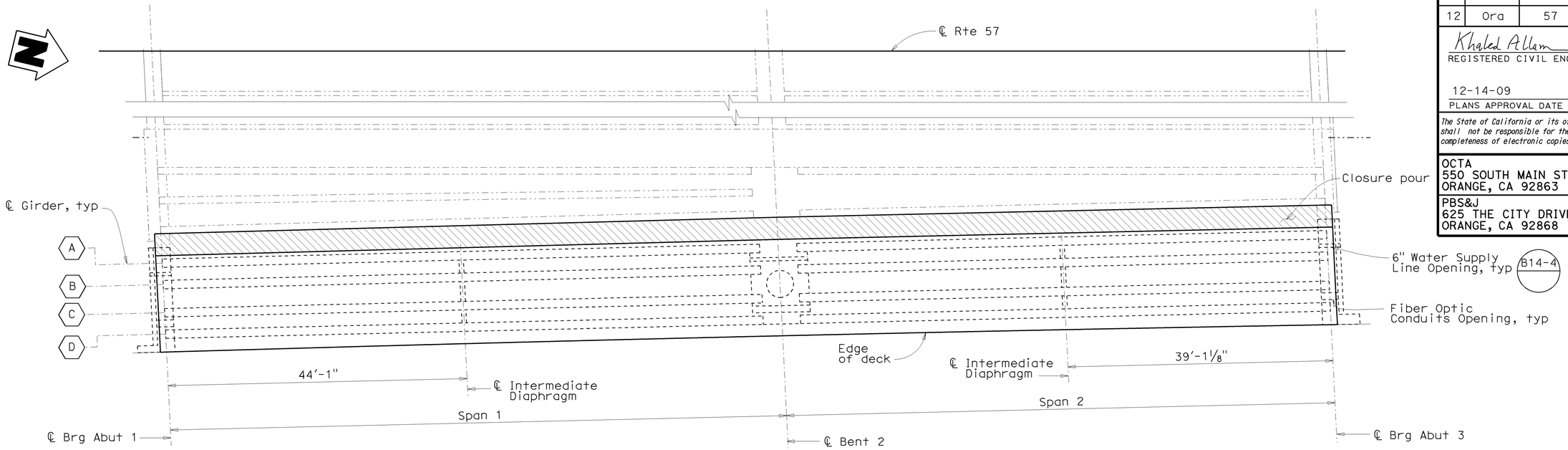

PLAN
1/8" = 1'-0"

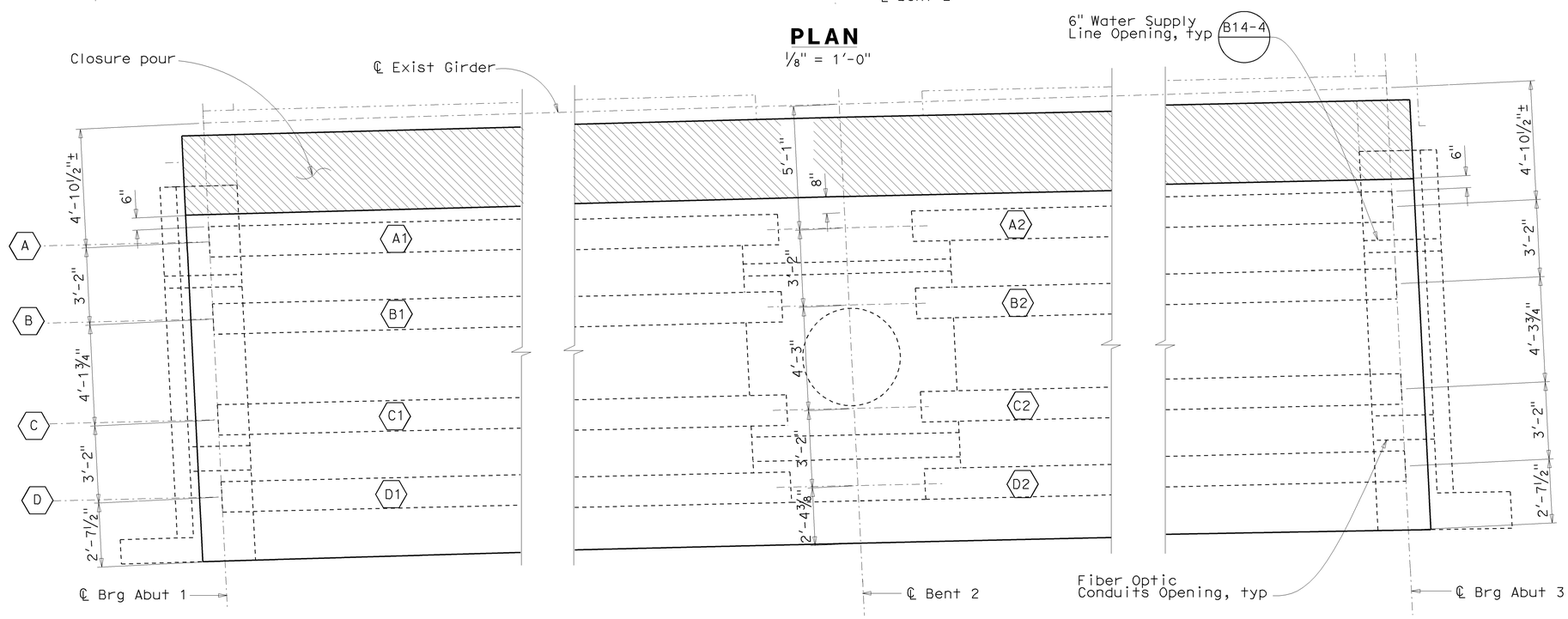

PARTIAL PLAN
3/8" = 1'-0"

LEGEND

Indicates Closure Pour

NOTE:
THE CONTRACTOR SHALL VERIFY ALL CONTROLLING FIELD DIMENSIONS BEFORE ORDERING OR FABRICATING ANY MATERIAL.

Jon Hamaguchi
DESIGN OVERSIGHT Jon Hamaguchi
6-24-09
SIGN OFF DATE

	BY	CHECKED
DESIGN	K. Allam/M. Carbuccia	S. Megally/Y. Deng
DETAILS	I. Karkoutli	S. Megally/Y. Deng
QUANTITIES	L. Khaleghi	V. Nong

PREPARED FOR THE STATE OF CALIFORNIA DEPARTMENT OF TRANSPORTATION

Alaedin Moubayed
PROJECT ENGINEER

BRIDGE NO. 55-0459
POST MILE 16.4

ORANGETHORPE AVE UC (WIDEN)
GIRDER LAYOUT

DESIGN DETAIL SHEET (ENGLISH) (REV. 2/25/05)

ORIGINAL SCALE IN INCHES FOR REDUCED PLANS 0 1 2 3

CU 12
EA 0F0311

DISREGARD PRINTS BEARING EARLIER REVISION DATES

REVISION DATES (PRELIMINARY STAGE ONLY)

SHEET 13 OF 32

FILE => 55-0459-1-g_1o01.dgn

USERNAME => trlenard DATE PLOTTED => 16-DEC-2009 TIME PLOTTED => 12:46

DIST	COUNTY	ROUTE	POST MILES TOTAL PROJECT	SHEET No	TOTAL SHEETS
12	Ora	57	16.2/18.6	859	960

Khaled Allam 6/15/09
REGISTERED CIVIL ENGINEER DATE

12-14-09
PLANS APPROVAL DATE

REGISTERED PROFESSIONAL ENGINEER Khaled Allam No. 67110 Exp. 9/30/10 CIVIL STATE OF CALIFORNIA

The State of California or its officers or agents shall not be responsible for the accuracy or completeness of electronic copies of this plan sheet.

OCTA
550 SOUTH MAIN STREET
ORANGE, CA 92863

PBS&J
625 THE CITY DRIVE SOUTH, SUITE 200
ORANGE, CA 92868

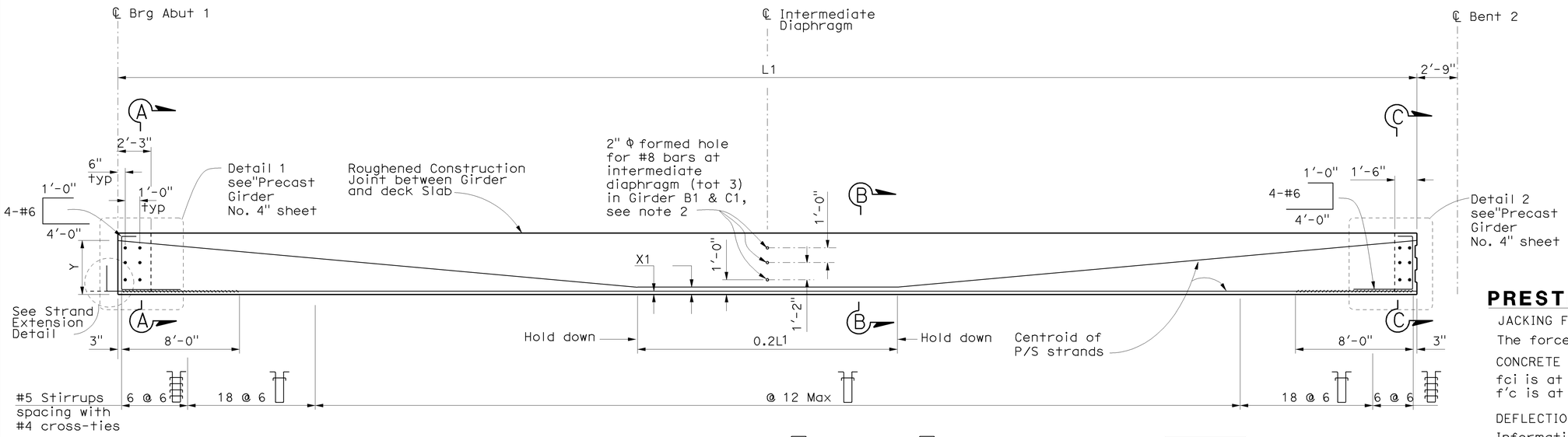

ELEVATION OF GIRDER (A1) THRU (C1)

1/8" = 1'-0"

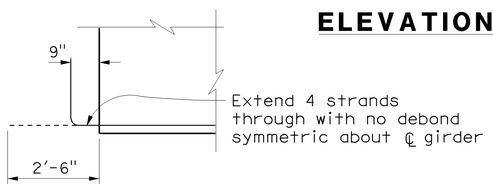

STRAND EXTENSION DETAIL

No Scale

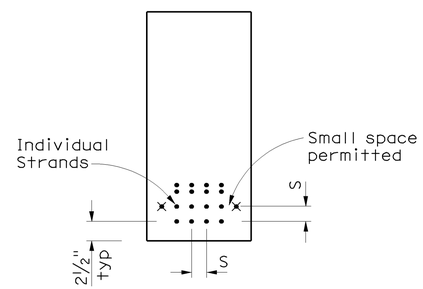

(A1) THRU (C1)

No Scale

PRESTRESSING NOTES

JACKING FORCE:

The force required at transfer, (See Table).

CONCRETE STRENGTH: (See Table)

fci is at time of initial stressing, ksi.
f'c is at 28 days, ksi.

DEFLECTION COMPONENTS:

Informational - to be used in setting screed line elevations.

Screed line elevation for deck concrete will be determined by the Engineer.

1. Strands may be bundled in groups consisting of 3 vertically 2 horizontally, and separated at the ends.
2. The min distance "S" between groups or individual strands is 1½" for ⅜" strands, 1¾" for 7/16" and 9/16" strands and 2" for ⅝" strands.
3. "S" is measured between centers of adjacent strands.
4. Approval of Engineer is required for deviation.

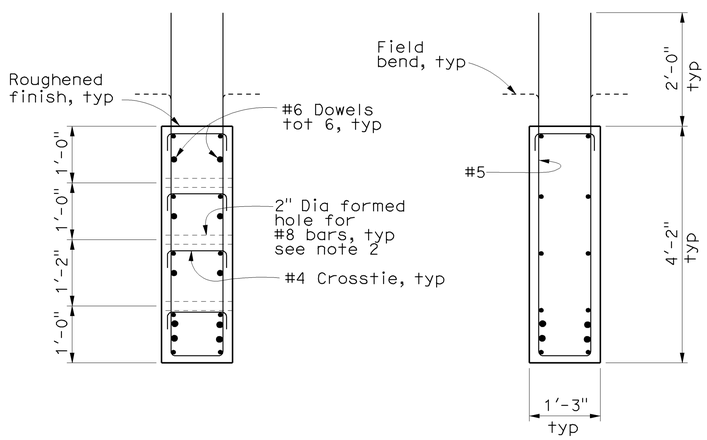

SECTION A-A

¾" = 1'-0"

SECTION B-B

¾" = 1'-0"

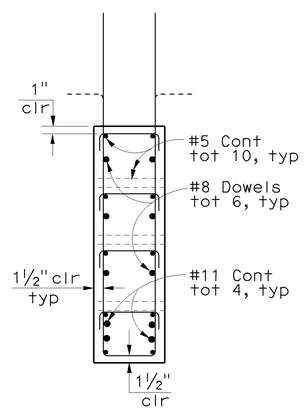

SECTION C-C

¾" = 1'-0"

NOTES

1. Debond 2 strands only, See section of girder (A1) thru (C1)
2. Girder A1 has 1" ø bolts instead of formed holes.

LEGEND

- • Indicates Pre-tensioned strand
- × Indicates Debonded Pre-tensioned straight strand
- ~~~~~ Indicates debonded length of pre-tensioned strand
- : Indicates bundled harped strands

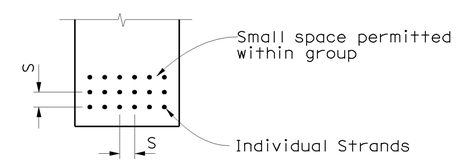

CLEARANCES FOR PRETENSIONED STRANDS

No Scale

Girder Location or Designation	Span	Girder Length (L)	P=Jacking Force (kips)	Number of Straight Strands	Number of Harped Strands	X1	X2	Y	Concrete Strength		Deflection	
									fci	f'c	Deck DL	Barrier & SW
A1	1	88'-2"	791	10	8	3.7"	6.75"	43.5"	5.5	6.5	0.43	0.16
B1	1	88'-2"	791	10	8	3.7"	6.75"	43.5"	5.5	6.5	0.54	0.16
C1	1	88'-2½"	791	10	8	3.7"	6.75"	43.5"	5.5	6.5	0.54	0.16

NOTE:
THE CONTRACTOR SHALL VERIFY ALL CONTROLLING FIELD DIMENSIONS BEFORE ORDERING OR FABRICATING ANY MATERIAL.

DESIGN OVERSIGHT Jon Hamaguchi
6-24-09
SIGN OFF DATE

	BY	CHECKED
DESIGN	K. Allam/M. Carbuccia	S. Megally/Y. Deng
DETAILS	I. Karkoutli	S. Megally/Y. Deng
QUANTITIES	L. Khaleghi	V. Nong

PREPARED FOR THE STATE OF CALIFORNIA DEPARTMENT OF TRANSPORTATION

Alaedin Moubayed
PROJECT ENGINEER

BRIDGE NO. 55-0459
POST MILE 16.4

ORANGETHORPE AVE UC (WIDEN)
PRECAST GIRDER DETAILS NO. 1

DESIGN DETAIL SHEET (ENGLISH) (REV. 2/25/05)

ORIGINAL SCALE IN INCHES FOR REDUCED PLANS 0 1 2 3

CU 12
EA 0F0311

DISREGARD PRINTS BEARING EARLIER REVISION DATES

REVISION DATES (PRELIMINARY STAGE ONLY)

SHEET 14 OF 32

FILE => 55-0459-1-gdt01.dgn

USERNAME => friehard DATE PLOTTED => 16-DEC-2009 TIME PLOTTED => 12:46

DIST	COUNTY	ROUTE	POST MILES TOTAL PROJECT	SHEET No	TOTAL SHEETS
12	Ora	57	16.2/18.6	860	960

Khaled Allam 6/15/09
REGISTERED CIVIL ENGINEER DATE

12-14-09
PLANS APPROVAL DATE

REGISTERED PROFESSIONAL ENGINEER Khaled Allam No. 67110 Exp. 9/30/10 CIVIL STATE OF CALIFORNIA

The State of California or its officers or agents shall not be responsible for the accuracy or completeness of electronic copies of this plan sheet.

OCTA
550 SOUTH MAIN STREET
ORANGE, CA 92863

PBS&J
625 THE CITY DRIVE SOUTH, SUITE 200
ORANGE, CA 92868

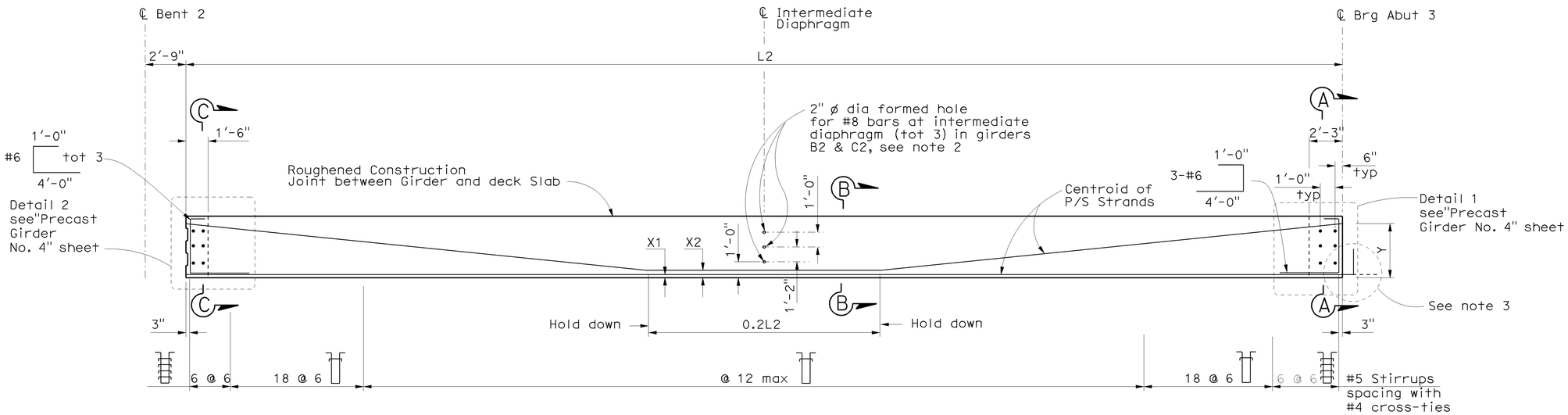

ELEVATION OF GIRDER (A2) THRU (C2)

1/8" = 1'-0"

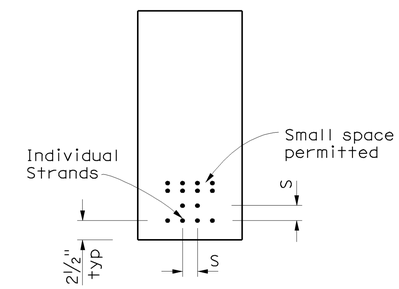

(A2) THRU (C2)

No Scale

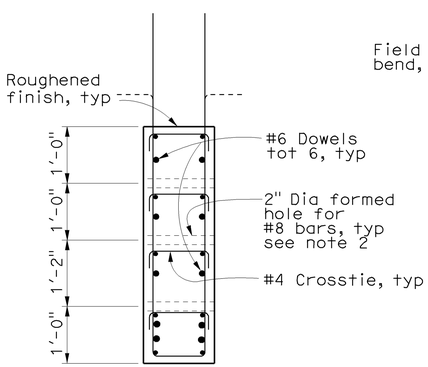

SECTION A-A

3/4" = 1'-0"

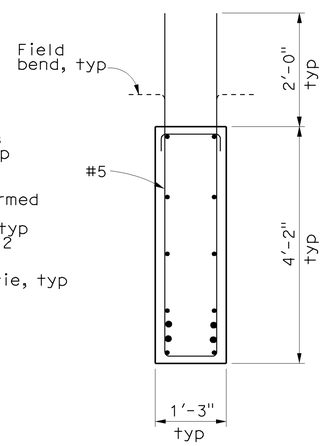

SECTION B-B

3/4" = 1'-0"

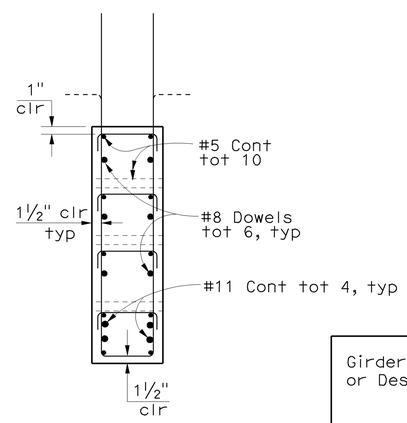

SECTION C-C

3/4" = 1'-0"

NOTES

1. For Prestressing Notes and Clearance for Pretensioned Strands, See "Precast Girder Details No. 1" sheet.
2. Girder A2 has 1" ø bolts instead of formed holes.
3. For strand Extension detail, see "Precast Girder Detail No. 1" sheet.

LEGEND

- • Indicates Pre-tensioned strand
- : Indicates bundled harped strands

Girder Location or Designation	Span	Girder Length (L)	P=Jacking Force (kips)	Number of Straight Strands	Number of Harped Strands	X1	X2	Y	Concrete Strength		Deflection	
									fci	fc'	Deck DL	Barrier & SW
A2	2	78'-2"	615	6	8	3.2"	6.75"	43.5"	5.5	6.5	0.26	0.07
B2	2	78'-2"	615	6	8	3.2"	6.75"	43.5"	5.5	6.5	0.33	0.07
C2	2	78'-2 1/2"	615	6	8	3.2"	6.75"	43.5"	5.5	6.5	0.33	0.07

NOTE:
THE CONTRACTOR SHALL VERIFY ALL CONTROLLING FIELD DIMENSIONS BEFORE ORDERING OR FABRICATING ANY MATERIAL.

Jon Hamaguchi
DESIGN OVERSIGHT Jon Hamaguchi
6-24-09
SIGN OFF DATE

	BY	CHECKED
DESIGN	K. Allam/M. Carbuccia	S. Megally/Y. Deng
DETAILS	I. Karkoutli	S. Megally/Y. Deng
QUANTITIES	L. Khaleghi	V. Nong

PREPARED FOR THE STATE OF CALIFORNIA DEPARTMENT OF TRANSPORTATION

Alaedin Moubayed
PROJECT ENGINEER

BRIDGE NO. 55-0459
POST MILE 16.4

ORANGETHORPE AVE UC (WIDEN)
PRECAST GIRDER DETAILS NO. 2

DESIGN DETAIL SHEET (ENGLISH) (REV. 2/25/05)

ORIGINAL SCALE IN INCHES FOR REDUCED PLANS 0 1 2 3

CU 12
EA 0F0311

DISREGARD PRINTS BEARING EARLIER REVISION DATES

REVISION DATES (PRELIMINARY STAGE ONLY)

SHEET 15 OF 32

FILE => 55-0459-1-gdt02.dgn

USERNAME => rtrienord DATE PLOTTED => 16-DEC-2009 TIME PLOTTED => 12:47

DIST	COUNTY	ROUTE	POST MILES TOTAL PROJECT	SHEET No	TOTAL SHEETS
12	Ora	57	16.2/18.6	861	960

Khaled Allam 6/15/09
REGISTERED CIVIL ENGINEER DATE

12-14-09
PLANS APPROVAL DATE

The State of California or its officers or agents shall not be responsible for the accuracy or completeness of electronic copies of this plan sheet.

REGISTERED PROFESSIONAL ENGINEER Khaled Allam No. 67110 Exp. 9/30/10 CIVIL STATE OF CALIFORNIA

OCTA
550 SOUTH MAIN STREET
ORANGE, CA 92863

PBS&J
625 THE CITY DRIVE SOUTH, SUITE 200
ORANGE, CA 92868

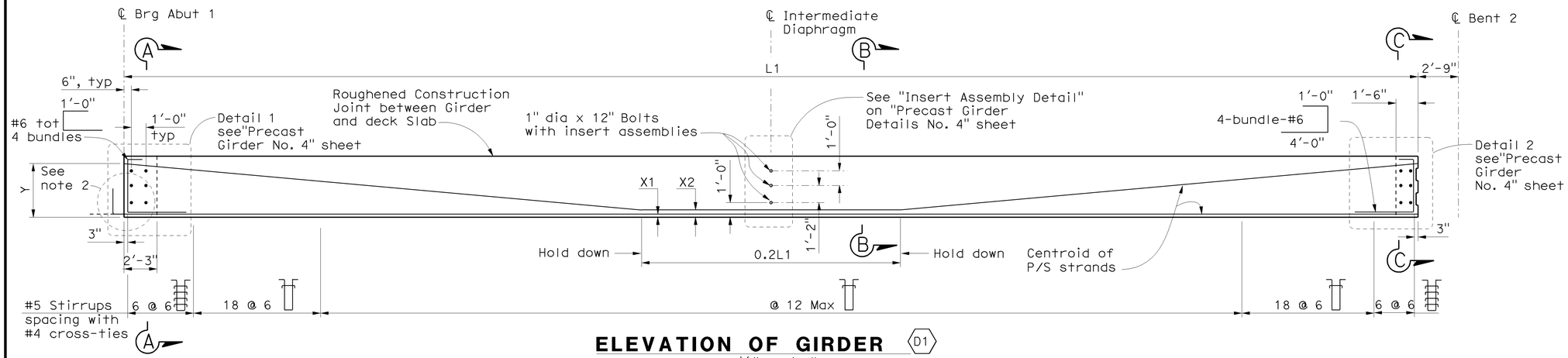

ELEVATION OF GIRDER (D1)

1/8" = 1'-0"

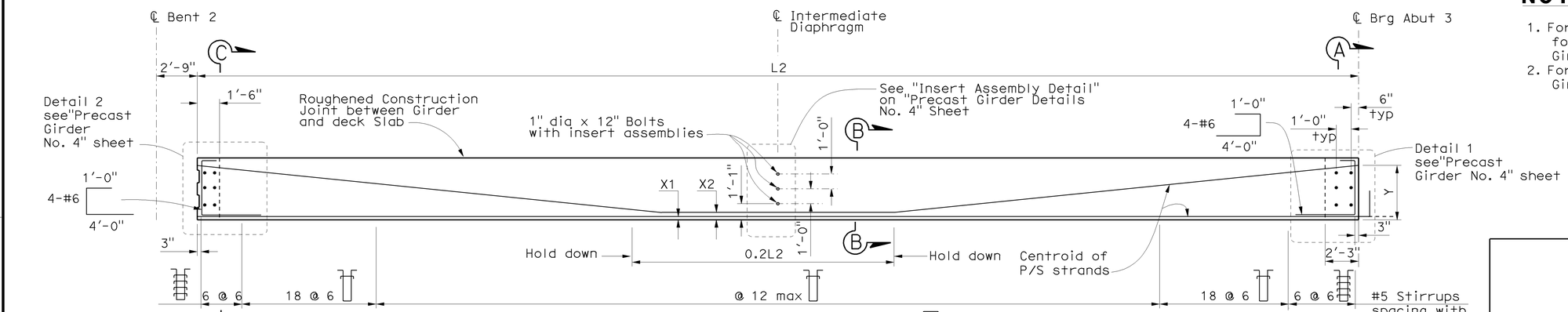

ELEVATION OF GIRDER (D2)

1/8" = 1'-0"

NOTES:

1. For prestressing notes and clearance for pretensioned strands, See "Precast Girder Details No. 1" sheet.
2. For Strand extension detail, see "Precast Girder Details No. 1" sheet.

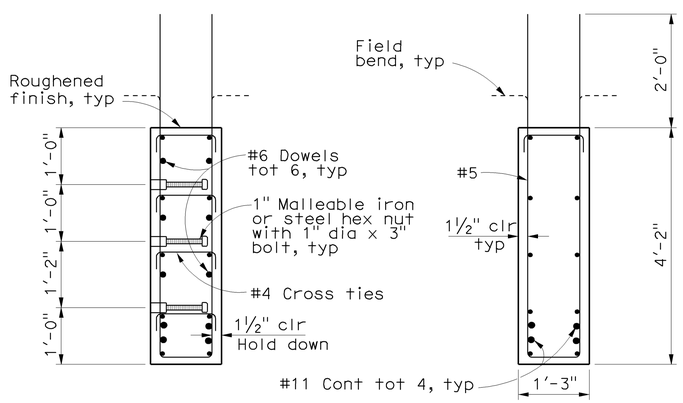

SECTION A-A

3/4" = 1'-0"

SECTION B-B

3/4" = 1'-0"

SECTION C-C

3/4" = 1'-0"

LEGEND

- Indicates Pre-tensioned strand
: Indicates bundled harped strands

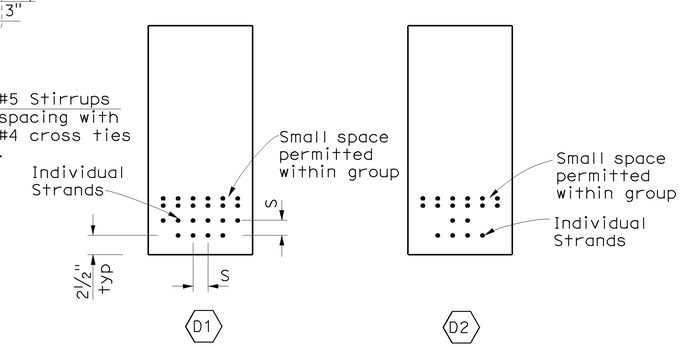

CLEARANCES FOR PRETENSIONED STRANDS

No Scale

Girder Location or Designation	Span	Girder Length (L)	P=Jacking Force (kips)	Number of Straight Strands	Number of Harped Strands	X1	X2	Y	Concrete Strength		Deflection	
									fci	fc'	Deck DL	Barrier & SW
D1	1	88'-2½"	967	10	12	3.7"	6.75"	45.5"	5.5	6.5	0.57	0.16
D2	2	78'-2½"	791	6	12	3.2"	6.75"	45.5"	5.5	6.5	0.35	0.07

NOTE:
THE CONTRACTOR SHALL VERIFY ALL CONTROLLING FIELD DIMENSIONS BEFORE ORDERING OR FABRICATING ANY MATERIAL.

Jon Hamaguchi
DESIGN OVERSIGHT
6-24-09
SIGN OFF DATE

	BY	CHECKED
DESIGN	K. Allam/M. Carbuccia	S. Megally/Y. Deng
DETAILS	I. Karkoutli	S. Megally/Y. Deng
QUANTITIES	L. Khaleghi	V. Nong

PREPARED FOR THE STATE OF CALIFORNIA DEPARTMENT OF TRANSPORTATION

Alaedin Moubayed
PROJECT ENGINEER

BRIDGE NO. 55-0459
POST MILE 16.4

ORANGETHORPE AVE UC (WIDEN)
PRECAST GIRDER DETAILS NO. 3

DESIGN DETAIL SHEET (ENGLISH) (REV. 2/25/05)

ORIGINAL SCALE IN INCHES FOR REDUCED PLANS 0 1 2 3

CU 12
EA 0F0311

DISREGARD PRINTS BEARING EARLIER REVISION DATES

REVISION DATES (PRELIMINARY STAGE ONLY)

SHEET 16 OF 32

FILE => 55-0459-1-gdt03.dgn

USERNAME => trlenard DATE PLOTTED => 16-DEC-2009 TIME PLOTTED => 13:43

DIST	COUNTY	ROUTE	POST MILES TOTAL PROJECT	SHEET No	TOTAL SHEETS
12	Ora	57	16.2/18.6	862	960

Khaled Allam 6/15/09
REGISTERED CIVIL ENGINEER DATE

12-14-09
PLANS APPROVAL DATE

REGISTERED PROFESSIONAL ENGINEER Khaled Allam No. 67110 Exp. 9/30/10 CIVIL STATE OF CALIFORNIA

The State of California or its officers or agents shall not be responsible for the accuracy or completeness of electronic copies of this plan sheet.

OCTA
550 SOUTH MAIN STREET
ORANGE, CA 92863

PBS&J
625 THE CITY DRIVE SOUTH, SUITE 200
ORANGE, CA 92868

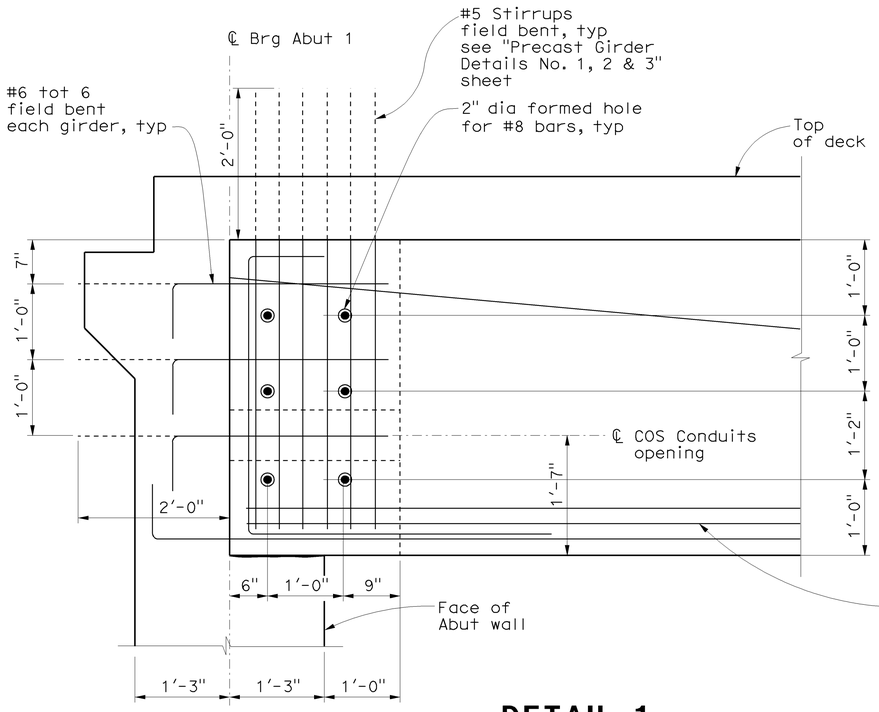

DETAIL 1
1" = 1'-0"

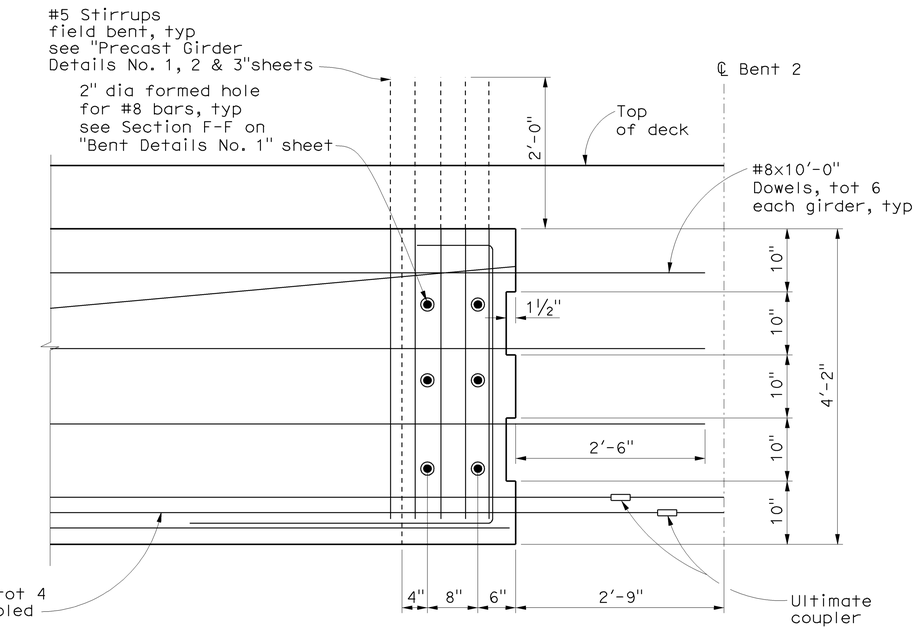

DETAIL 2
1" = 1'-0"

NOTES

1. Abut 1 is shown, Abut 3 is similar.
2. #8 x 5'-6" dowels placed through 2" dia holes formed in girder pressure grout hole after rebar placement total 3 per girder (at intermediat diaphragm for girder (B) & (C) and total 6 at end diaphragm).

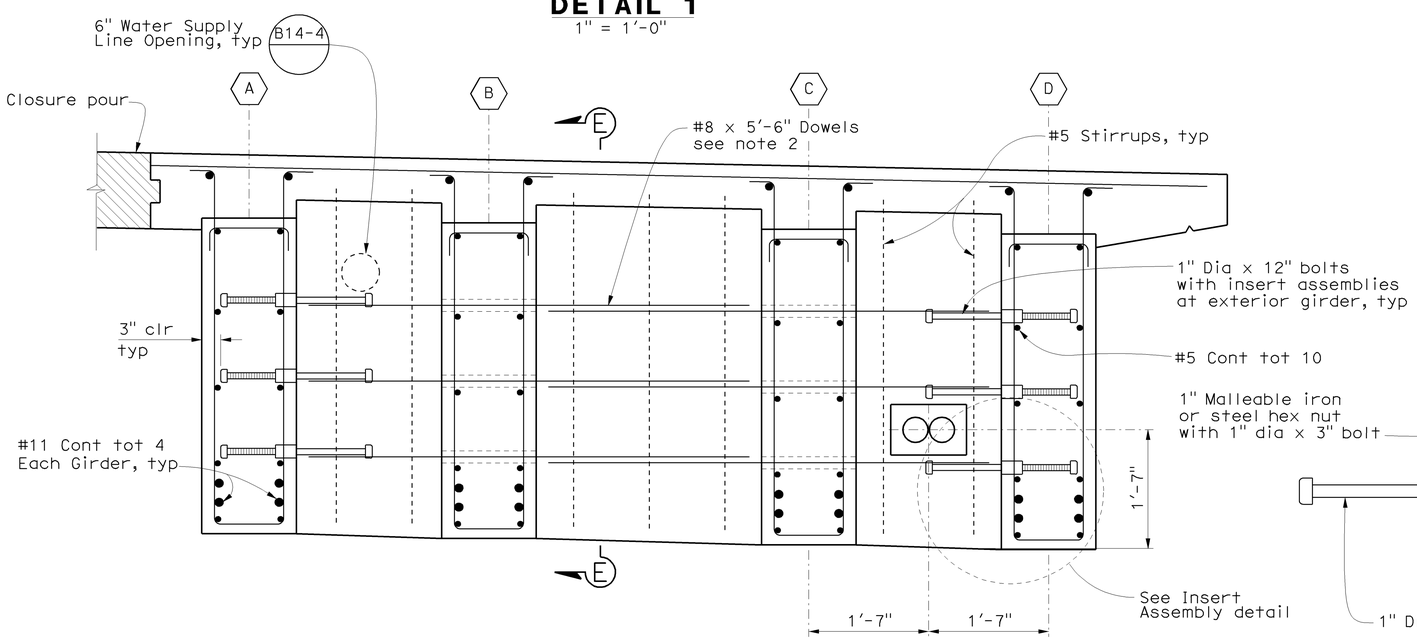

INTERMEDIATE DIAPHRAGM
1" = 1'-0"

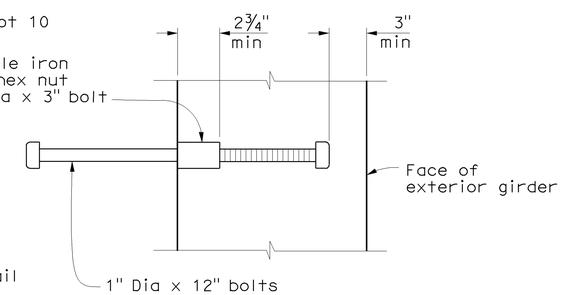

INSERT ASSEMBLY DETAIL
No Scale

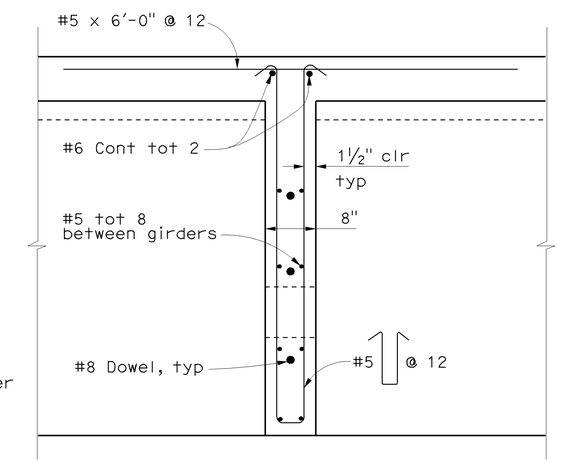

SECTION E-E
1" = 1'-0"

NOTE:
THE CONTRACTOR SHALL VERIFY ALL CONTROLLING FIELD DIMENSIONS BEFORE ORDERING OR FABRICATING ANY MATERIAL.

Jon Hamaguchi
DESIGN OVERSIGHT Jon Hamaguchi
6-24-09
SIGN OFF DATE

	BY	CHECKED
DESIGN	K. Allam/M. Carbuccia	S. Megally/Y. Deng
DETAILS	I. Karkoutli	S. Megally/Y. Deng
QUANTITIES	L. Khaleghi	V. Nong

PREPARED FOR THE STATE OF CALIFORNIA DEPARTMENT OF TRANSPORTATION

Alaedin Moubayed
PROJECT ENGINEER

BRIDGE NO. 55-0459
POST MILE 16.4

ORANGETHORPE AVE UC (WIDEN)
PRECAST GIRDER DETAILS NO. 4

DESIGN DETAIL SHEET (ENGLISH) (REV. 2/25/05)

ORIGINAL SCALE IN INCHES FOR REDUCED PLANS 0 1 2 3

CU 12
EA 0F0311

DISREGARD PRINTS BEARING EARLIER REVISION DATES

REVISION DATES (PRELIMINARY STAGE ONLY)

SHEET 17 OF 32

FILE => 55-0459-1-gdt04.dgn

USERNAME => friehard DATE PLOTTED => 16-DEC-2009 TIME PLOTTED => 13:43

DIST	COUNTY	ROUTE	POST MILES TOTAL PROJECT	SHEET No	TOTAL SHEETS
12	Ora	57	16.2/18.6	863	960

Khaled Allam 6/15/09
REGISTERED CIVIL ENGINEER DATE

12-14-09
PLANS APPROVAL DATE

REGISTERED PROFESSIONAL ENGINEER
Khaled Allam
No. 67110
Exp. 9/30/10
CIVIL
STATE OF CALIFORNIA

The State of California or its officers or agents shall not be responsible for the accuracy or completeness of electronic copies of this plan sheet.

OCTA
550 SOUTH MAIN STREET
ORANGE, CA 92863

PBS&J
625 THE CITY DRIVE SOUTH, SUITE 200
ORANGE, CA 92868

NOTES:

1. No splice allowed in #11 top girder reinforcement.
2. No splice allowed in #11 rebars

LEGEND

Indicates Closure Pour

Indicates bundled bars

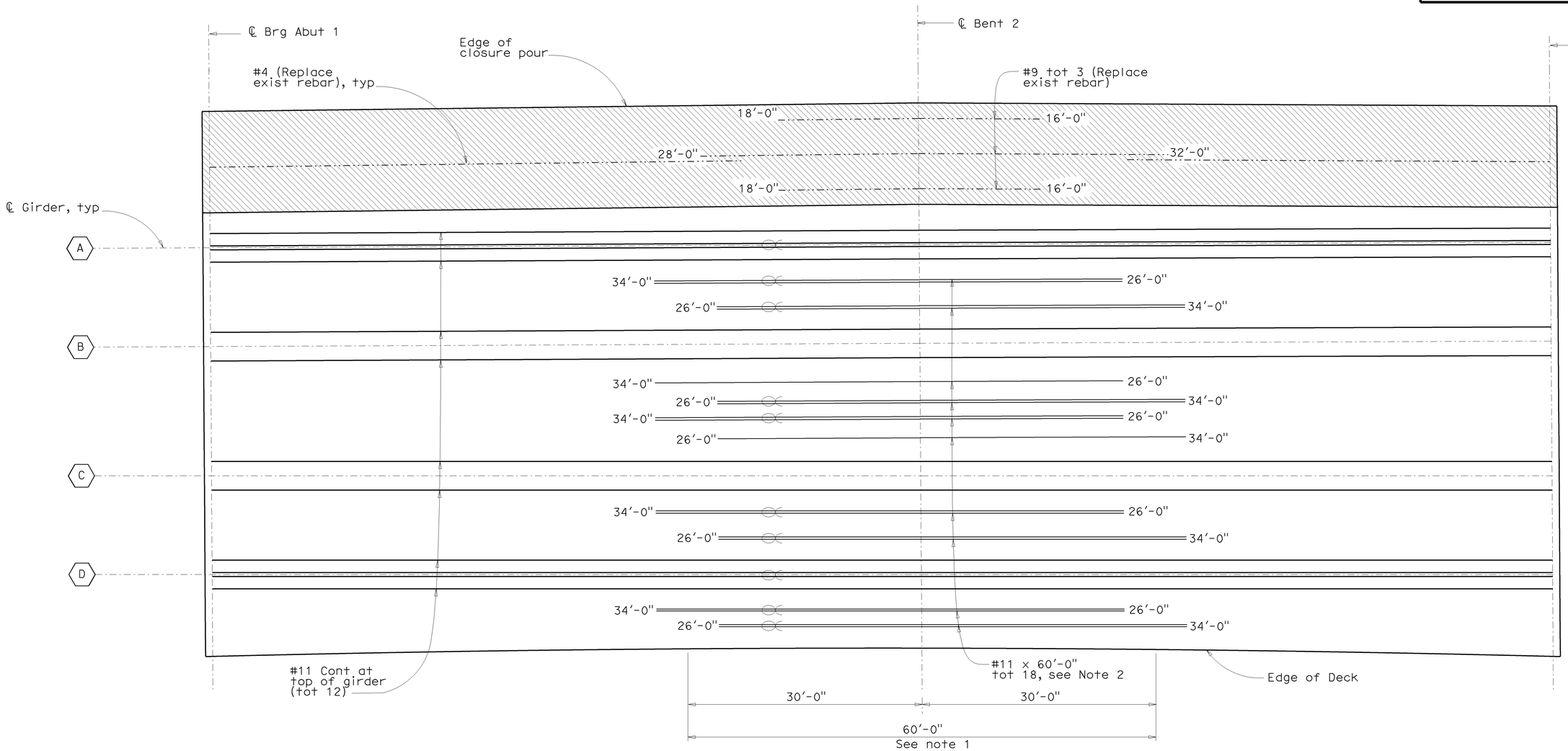

NOTE:
THE CONTRACTOR SHALL VERIFY ALL CONTROLLING FIELD DIMENSIONS BEFORE ORDERING OR FABRICATING ANY MATERIAL.

DECK ADDITIONAL LONGITUDINAL REINFORCEMENT

No Scale

Jon Hamaguchi
DESIGN OVERSIGHT Jon Hamaguchi
6-24-09
SIGN OFF DATE

	BY	CHECKED
DESIGN	K. Allam/M. Carbuccia	S. Megally/Y. Deng
DETAILS	I. Karkoutli	S. Megally/Y. Deng
QUANTITIES	L. Khaleghi	V. Nong

PREPARED FOR THE STATE OF CALIFORNIA DEPARTMENT OF TRANSPORTATION

Alaedin Moubayed
PROJECT ENGINEER

BRIDGE NO. 55-0459
POST MILE 16.4

ORANGETHORPE AVE UC (WIDEN)
ADDITIONAL DECK REINFORCEMENT

DESIGN DETAIL SHEET (ENGLISH) (REV. 2/25/05)

ORIGINAL SCALE IN INCHES FOR REDUCED PLANS 0 1 2 3

CU 12
EA 0F0311

DISREGARD PRINTS BEARING EARLIER REVISION DATES

REVISION DATES (PRELIMINARY STAGE ONLY)

SHEET 18 OF 32

FILE => 55-0459-1-o-gir-rf01.dgn

USERNAME => rfriehard DATE PLOTTED => 16-DEC-2009 TIME PLOTTED => 13:43

DIST	COUNTY	ROUTE	POST MILES TOTAL PROJECT	SHEET No	TOTAL SHEETS
12	Ora	57	16.2/18.6	864	960

Khaled Allam 6/15/09
REGISTERED CIVIL ENGINEER DATE

12-14-09
PLANS APPROVAL DATE

The State of California or its officers or agents shall not be responsible for the accuracy or completeness of electronic copies of this plan sheet.

REGISTERED PROFESSIONAL ENGINEER Khaled Allam No. 67110 Exp. 9/30/10 CIVIL STATE OF CALIFORNIA

OCTA
550 SOUTH MAIN STREET
ORANGE, CA 92863

PBS&J
625 THE CITY DRIVE SOUTH, SUITE 200
ORANGE, CA 92868

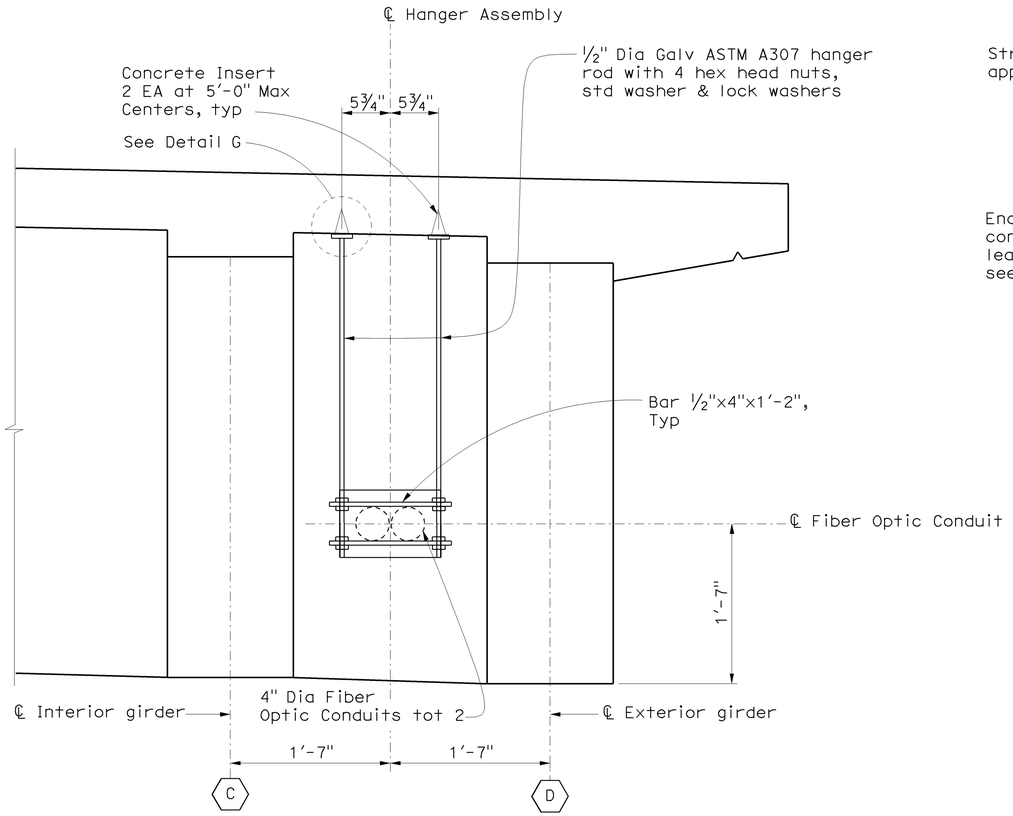

FIBER OPTIC CONDUIT HANGER SUPPORT DETAIL

No Scale

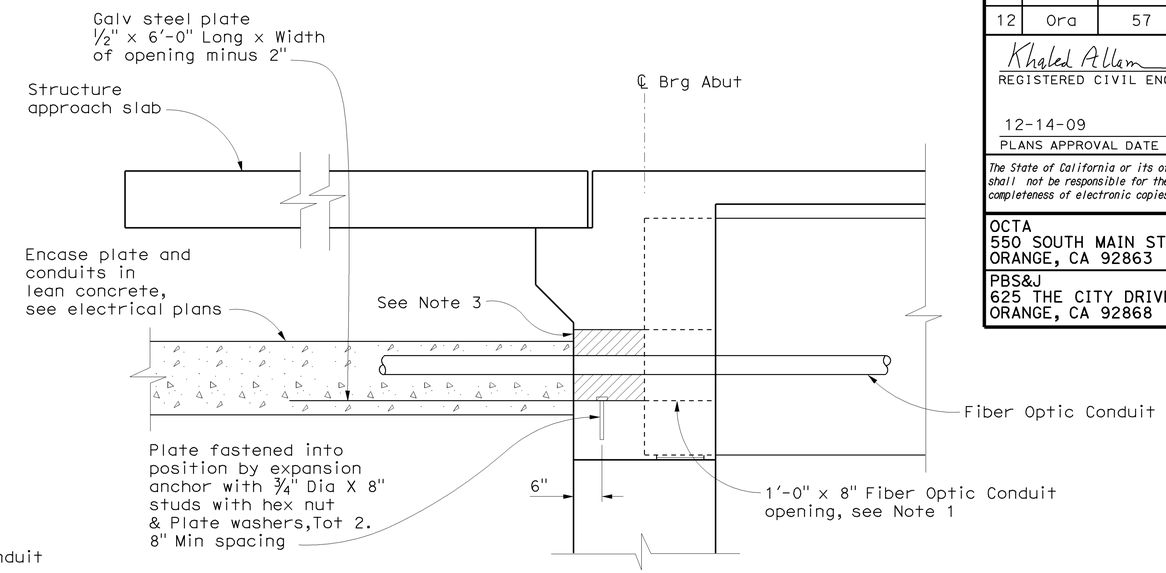

DETAIL AT ABUTMENT OPENING FOR FIBER OPTIC CONDUITS

¾" = 1'-0"

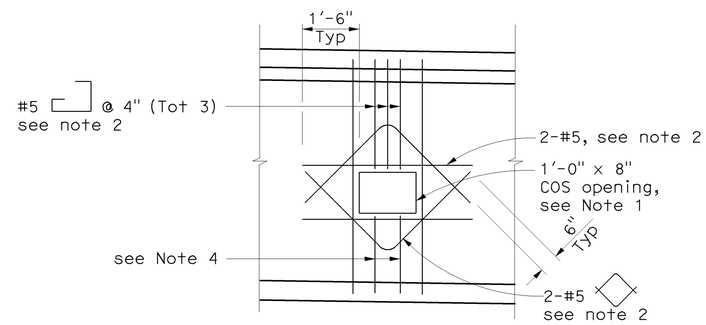

ABUTMENT DIAPHRAGM AND BENT CAP FIBER OPTIC CONDUIT OPENING DETAIL

No Scale

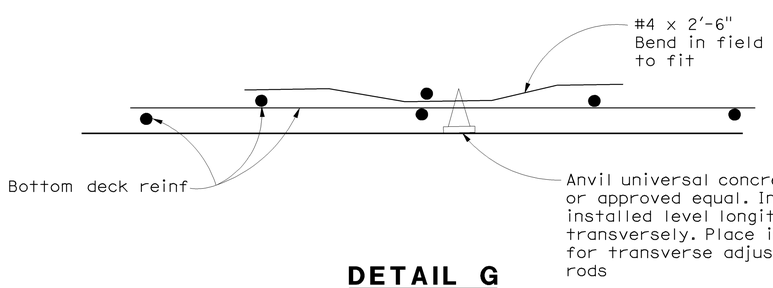

DETAIL G

No Scale

NOTES

1. The exact location, elevation, size and direction of Fiber optic openings, see "Typical Section sheets".
2. All reinforcement detailed to be placed in addition to reinforcement shown on project plans.
3. Seal conduits at abutments with concrete or mortar, after tightly wrapping utility with 2 layers of 15 LBS building paper.
4. Reinforcement to be same bar size and shape as adjacent reinforcement shown on project plans.

NOTE:
THE CONTRACTOR SHALL VERIFY ALL CONTROLLING FIELD DIMENSIONS BEFORE ORDERING OR FABRICATING ANY MATERIAL.

Jon Hamaguchi
DESIGN OVERSIGHT Jon Hamaguchi
6-24-09
SIGN OFF DATE

	BY	CHECKED
DESIGN	K. Allam/M. Carbuccia	S. Megally/Y. Deng
DETAILS	I. Karkoutli	S. Megally/Y. Deng
QUANTITIES	L. Khaleghi	V. Nong

PREPARED FOR THE STATE OF CALIFORNIA DEPARTMENT OF TRANSPORTATION

Alaedin Moubayed
PROJECT ENGINEER

BRIDGE NO. 55-0459
POST MILE 16.4

ORANGETHORPE AVE UC (WIDEN)
FIBER OPTIC CONDUITS DETAILS

DESIGN DETAIL SHEET (ENGLISH) (REV. 2/25/05)

ORIGINAL SCALE IN INCHES FOR REDUCED PLANS 0 1 2 3

CU 12
EA 0F0311

DISREGARD PRINTS BEARING EARLIER REVISION DATES

REVISION DATES (PRELIMINARY STAGE ONLY)

SHEET 19 OF 32

FILE => 55-0459-r-miscdt01.dgn

USERNAME => trlenard DATE PLOTTED => 16-DEC-2009 TIME PLOTTED => 13:43

RELEASED 11-10-97

DIST.	COUNTY	ROUTE	POST MILES TOTAL PROJECT	SHEET NO.	TOTAL SHEETS
12	Ora	57	16.2/18.6	865	960

Khaled Allam
REGISTERED ENGINEER - CIVIL

REGISTERED PROFESSIONAL ENGINEER
Khaled Allam
No. 67110
Exp. 9/3/10
CIVIL
STATE OF CALIFORNIA

12-14-09
PLANS APPROVAL DATE

The State of California or its officers or agents shall not be responsible for the accuracy or completeness of electronic copies of this plan sheet.

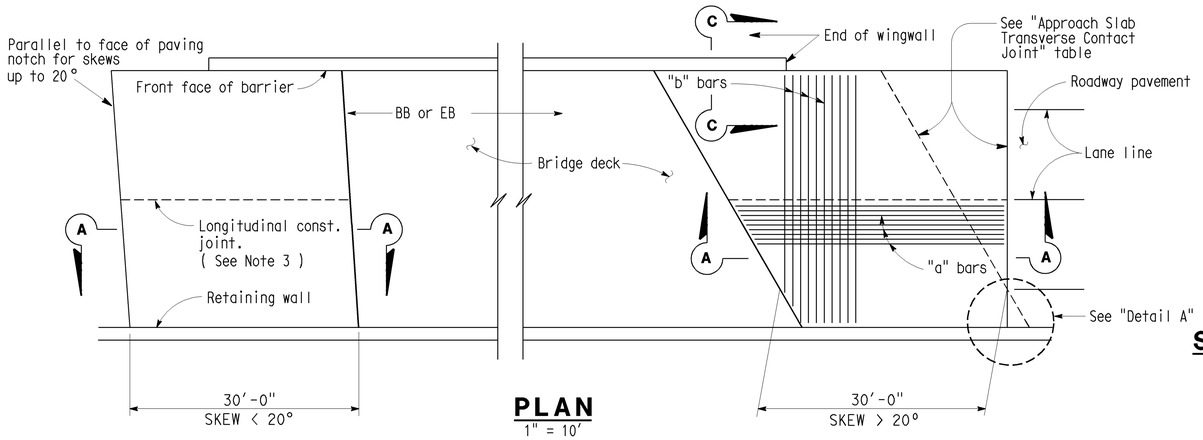

PLAN
1" = 10'

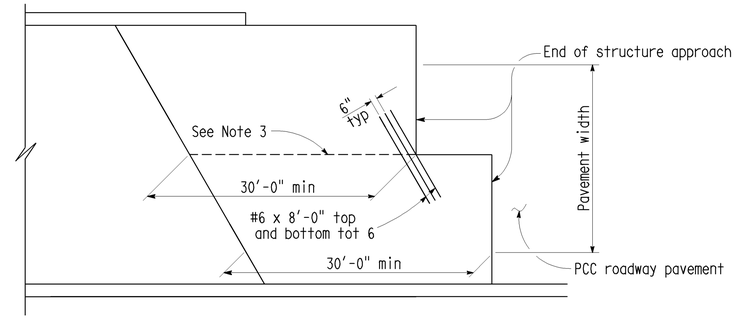

STRUCTURE APPROACH - END STAGGER DETAIL
No Scale

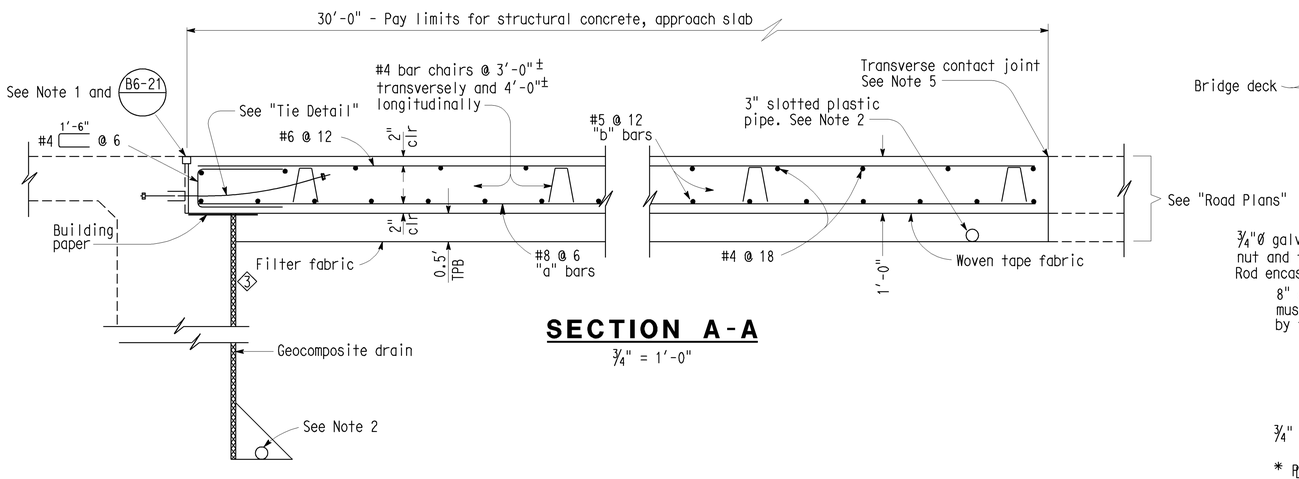

SECTION A-A
¾" = 1'-0"

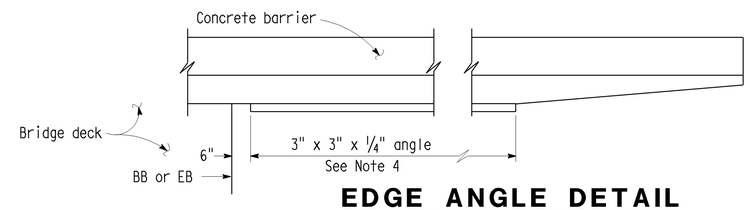

EDGE ANGLE DETAIL
½" = 1'-0"

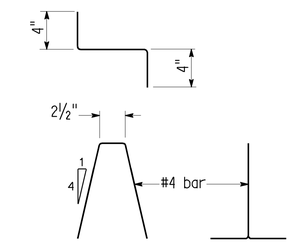

BAR CHAIR DETAIL
1½" = 1'-0"

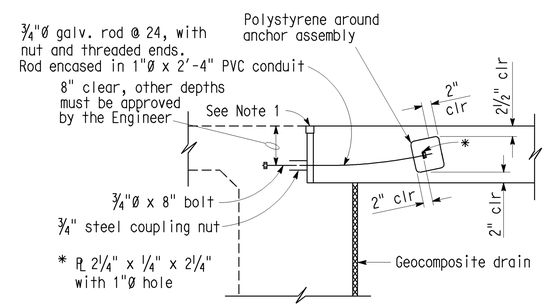

TIE DETAIL
¾" = 1'-0"

APPROACH SLAB TRANSVERSE CONTACT JOINT		
APPROACH SKEW	WITH AC ROADWAY PAVEMENT	WITH PCC ROADWAY PAVEMENT
< 20°	Parallel to face of paving notch	Parallel to face of paving notch
20° - 45°	Parallel to face of P N use (Detail A)	Stagger lines 24' to 36' apart
> 45°	Parallel to face of P N use (Detail A)	Stagger at each lane line

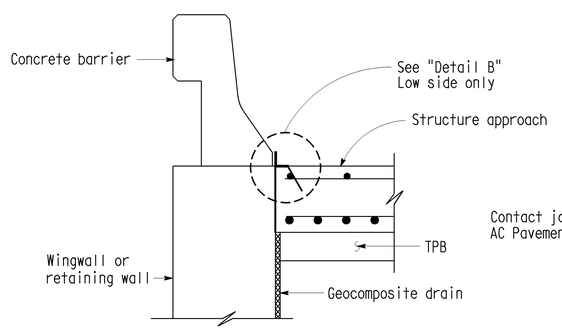

TYPE E-2

SECTION C-C
¾" = 1'-0"

~~(Type E-1 to be used, unless otherwise shown on plans)~~

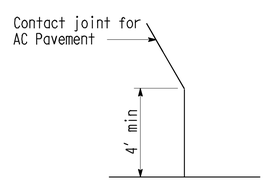

DETAIL A
No Scale

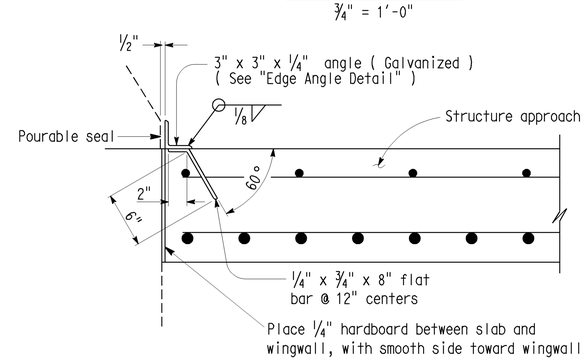

DETAIL B
1½" = 1'-0"

NOTES:

1. For details not noted or shown, see Structure Plans.
2. For drainage details, see "Structure Approach Drainage Details" sheet.
3. Longitudinal construction joints, when permitted by the Engineer, shall be located on lane lines.
4. End angle at beginning of barrier transition, end of wingwall or end of structure approach, as applicable
5. For transverse contact joint with new PCC paving, refer to Standard Plan A35-A.
6. At the contractor's option, approach slab transverse reinforcement may be placed parallel to paving notch. Spacing of transverse reinforcement is measured along ℄ roadway.

DIST.	COUNTY	ROUTE	KILOMETER POST TOTAL PROJECT	SHEET NO.	TOTAL SHEETS
12	Ora	57	16.2/18.6	866	960

Khaled Allam
REGISTERED ENGINEER - CIVIL

12-14-09
PLANS APPROVAL DATE

REGISTERED PROFESSIONAL ENGINEER
Khaled Allam
No. 67110
Exp. 9/3/10
CIVIL
STATE OF CALIFORNIA

The State of California or its officers or agents shall not be responsible for the accuracy or completeness of electronic copies of this plan sheet.

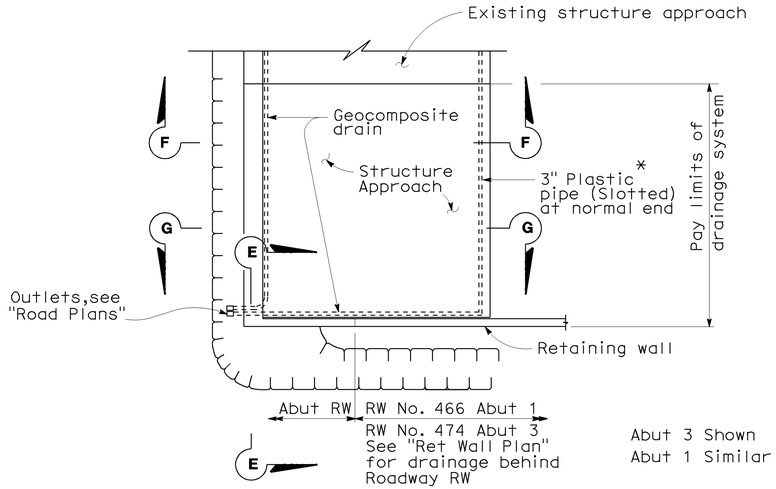

TYPICAL PLAN

*For pipe layout at staggered end,see "Detail B".

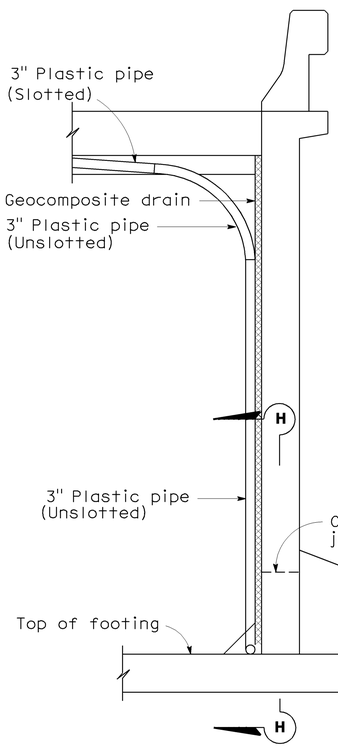

SECTION E-E ②

NOTE: Bends and junctions in 3" plastic pipe are 2'-6" radius min.

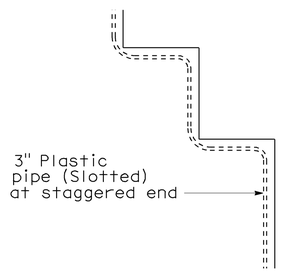

DETAIL B

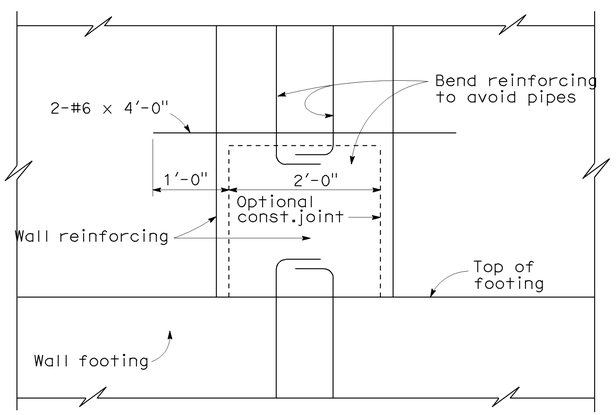

SECTION H-H

①

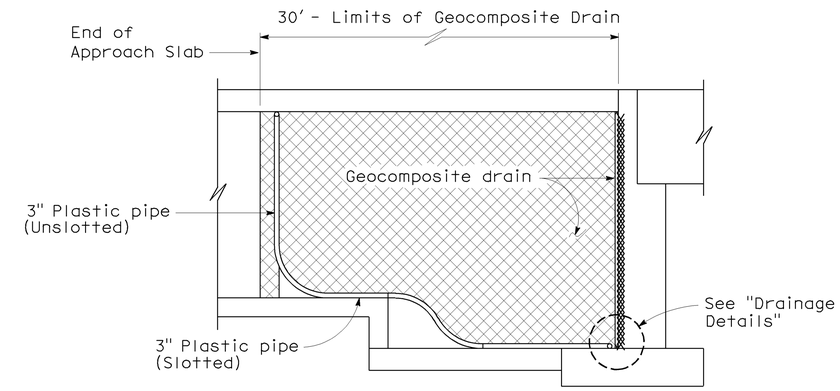

RETAINING WALL WINGWALL
SECTION G-G

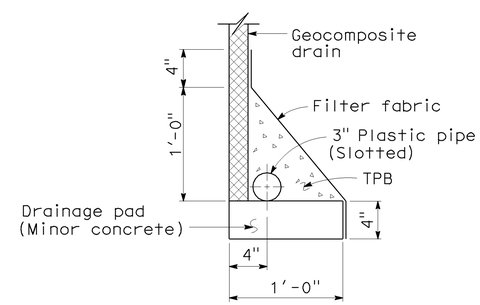

WITHOUT FOOTING
DRAINAGE DETAILS

①

SPECIAL DETAILS

STANDARD DRAWING					
RELEASE DATE Revised	DESIGN	BY M. TRAFFALIS	CHECKED E. THORKILDSEN	RELEASED BY	
FILE NO. xs3-110	DETAILS	BY R. YEE	CHECKED E. THORKILDSEN		
	SUBMITTED	BY M. HA	DRAWING DATE 4/98	OFFICE CHIEF	

① Deleted Details
② Revised Section E-E

STATE OF CALIFORNIA
DEPARTMENT OF TRANSPORTATION

DIVISION OF ENGINEERING SERVICES

BRIDGE NO. 55-0459
KILOMETER POST 16.4

ORANGETHORPE AVE UC (WIDEN)
STRUCTURE APPROACH DRAINAGE DETAILS

DS OSD 2147A (METRIC) (REV. 2/25/97)

ORIGINAL SCALE IN MILLIMETERS FOR REDUCED PLANS 0 10 20 30 40 50 60 70 80 90 100

CU 12
EA 0F0311

DISREGARD PRINTS BEARING EARLIER REVISION DATES 09/17/08

REVISION DATES (PRELIMINARY STAGE ONLY)

SHEET 21 OF 32

FILE => 55-0459-s-sadd.dgn

DATE PLOTTED => 16-DEC-2009 TIME PLOTTED => 13:43

FILE => 55-0459-s-sadd.dgn

DIST.	COUNTY	ROUTE	KILOMETER POST TOTAL PROJECT	SHEET NO.	TOTAL SHEETS
12	Ora	57	16.2/18.6	867	960

Khaled Allam
REGISTERED ENGINEER - CIVIL

12-14-09
PLANS APPROVAL DATE

REGISTERED PROFESSIONAL ENGINEER Khaled Allam No. 67110 Exp. 9/30/10 CIVIL STATE OF CALIFORNIA

The State of California or its officers or agents shall not be responsible for the accuracy or completeness of electronic copies of this plan sheet.

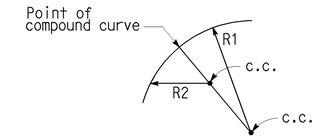

ELLIPTICAL CASING DETAIL CLASS F AND P/F COLUMN

Radii R1 and R2 to be determined by the Contractor subject to the approval of the Engineer

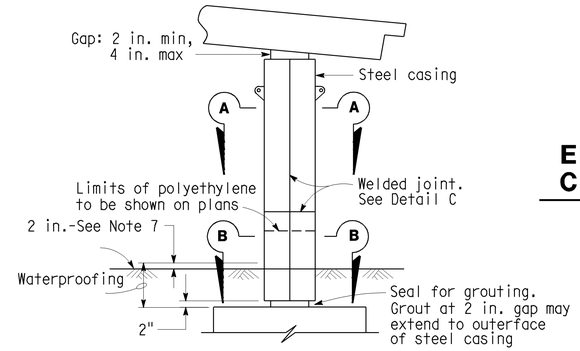

CLASS P/F COLUMN

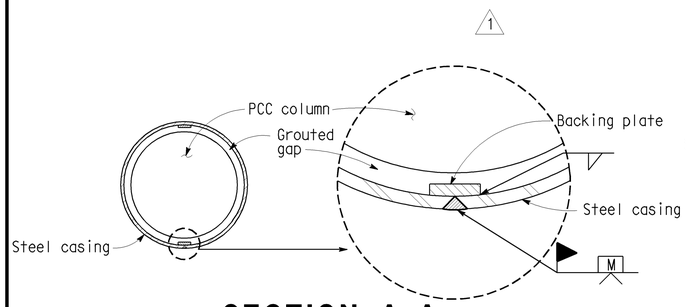

SECTION A-A ROUND COLUMN

Minimum inside diameter of steel casing = 1½" greater than nominal column diameter for Class F and 2½" for Class P/F

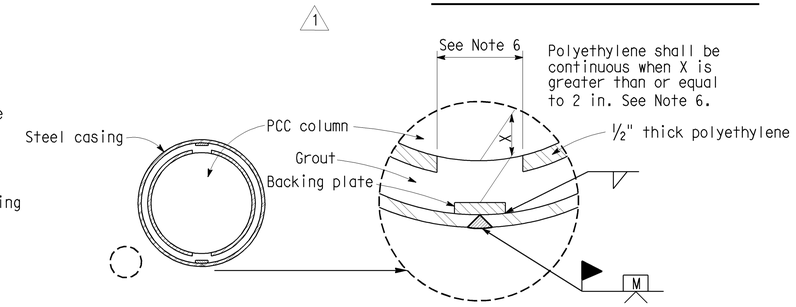

SECTION B-B ROUND COLUMN

Minimum inside diameter of steel casing = 2½" greater than nominal column diameter for Class P/F.

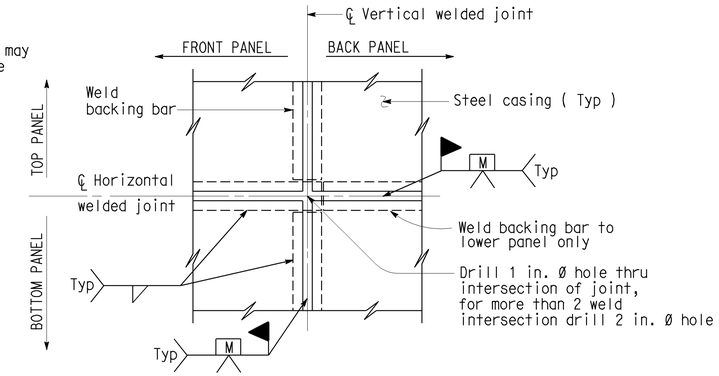

(TWO WELDED INTERSECTION JOINT)

DETAIL C

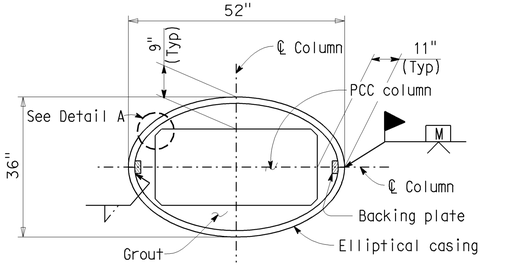

SECTION A-A RECTANGULAR COLUMN 2

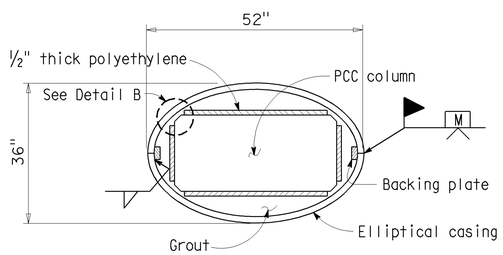

SECTION B-B RECTANGULAR COLUMN 2

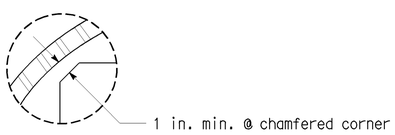

DETAIL A

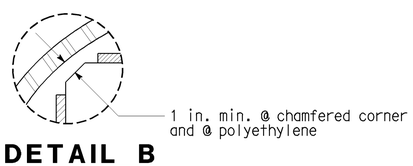

DETAIL B

NOTES:

1) For varying thickness steel casing inside surface to remain flush. Minimum clearance from PCC column to casing shall be maintained.
2) Appropriate injection nozzles to be provided on casing, but removed and ground flush following completion of grouting operation.
3) All voids between steel casing and polyethylene (Class P/F), and steel casing and PCC column (Class F) to be filled with grout.
4) Location and number of vertical and horizontal welds to be determined by the Contractor, and subject to the approval of the Engineer. The location of casing welds are for illustration. No skip welds allowed.
5) Circular steel casing to be ¼" thick minimum for casings with a 4'-4" diameter or less; all other steel casings to be ⅜" thick unless noted differently on contract plans. Backing plates to be the same thickness as casing up to maximum ½" thick.
6) Contractor shall remove 12 in. polyethylene strip behind backing plate if backing plate is closer than 2" from face of column.
7) Waterproof limits for steel casings. Typical for Classe "F" and "P/F".
8) For pipe extensions, opening shall be no more than ¼" greater than the pipe extension diameter. For other openings, the opening diameter to be determined by the Engineer.

1

NO SCALE

STANDARD DRAWING

RELEASE DATE	11-16-06	DESIGN	BY BRIAN MARONEY	CHECKED R.J. ZELINSKI	RELEASED BY
FILE NO.	xs7-010e	DETAILS	BY R. YEE	CHECKED PAT HIPLEY	Michael D. Keever OFFICE CHIEF
		SUBMITTED	BY R.J. ZELINSKI	DRAWING DATE 8/93	

STRUCTURES DESIGN DETAIL SHEET (ENGLISH) (REV. 10/25/05)

1 Deleted Detail
2 Revised Detail

ORIGINAL SCALE IN INCHES FOR REDUCED PLANS 0 1 2 3

STATE OF CALIFORNIA
DEPARTMENT OF TRANSPORTATION

DIVISION OF ENGINEERING SERVICES

CU 12
EA 0F0311

BRIDGE NO. 55-0459
KILOMETER POST 16.4

ORANGETHORPE AVE UC (WIDEN)
STEEL COLUMN CASINGS

DISREGARD PRINTS BEARING EARLIER REVISION DATES

REVISION DATES (PRELIMINARY STAGE ONLY)

SHEET 22 OF 32

USERNAME => trlenard

55-0459-s-scc.dgn

DATE PLOTTED => 16-DEC-2009 TIME PLOTTED => 13:43

DIST	COUNTY	ROUTE	POST MILES TOTAL PROJECT	SHEET No	TOTAL SHEETS
12	Ora	57	16.2/18.6	868	960

Khaled Allam 6/15/09
REGISTERED CIVIL ENGINEER DATE

12-14-09
PLANS APPROVAL DATE

REGISTERED PROFESSIONAL ENGINEER Khaled Allam No. 67110 Exp. 9/30/10 CIVIL STATE OF CALIFORNIA

The State of California or its officers or agents shall not be responsible for the accuracy or completeness of electronic copies of this plan sheet.

OCTA
550 SOUTH MAIN STREET
ORANGE, CA 92863

PBS&J
625 THE CITY DRIVE SOUTH, SUITE 200
ORANGE, CA 92868

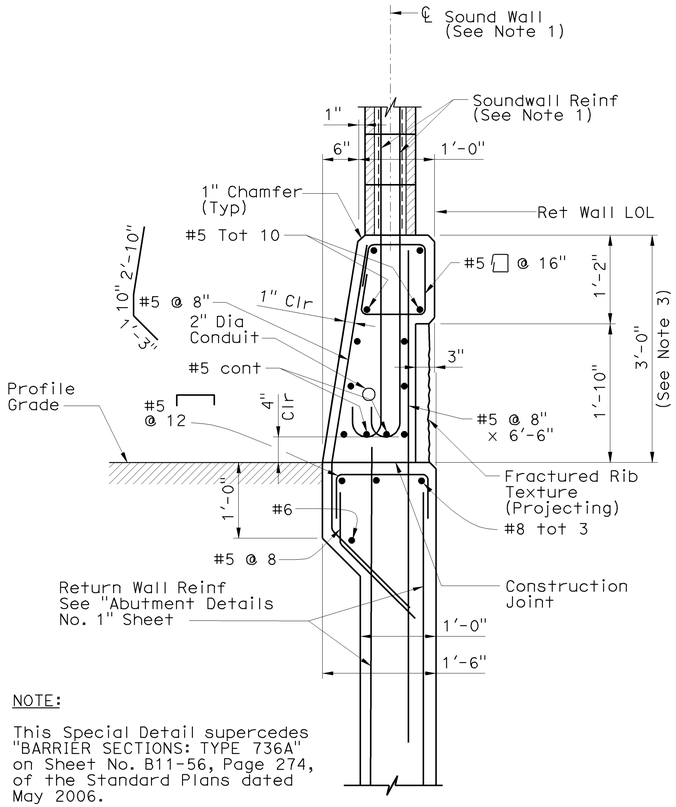

NOTE:

This Special Detail supercedes "BARRIER SECTIONS: TYPE 736A" on Sheet No. B11-56, Page 274, of the Standard Plans dated May 2006.

SOUND WALL ON BARRIER TYPE 736A (MODIFIED)

1" = 1'-0"

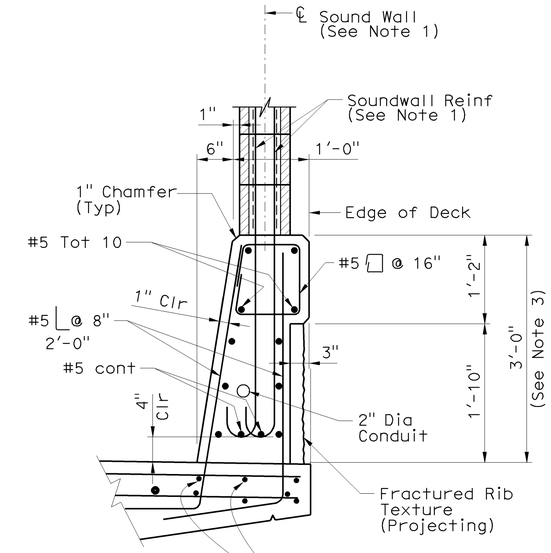

NOTE:

This Special Detail supercedes "BARRIER SECTIONS: TYPE 736" on Sheet No. B11-56, Page 274, of the Standard Plans dated May 2006.

SOUND WALL ON BARRIER TYPE 736 (MODIFIED) ON BRIDGE DECK

1" = 1'-0"

NOTES

1. For additional Soundwall Information, See "Soundwall-Masonry Block" Sheet.
2. For Conc deck overhang Reinf under Barrier, See "Typical Section" sheet.
3. Dimension may vary with roadway cross slope, and with certain thickness of surfacing.
4. Longitudinal Reinf to stop at all Exp Joints.

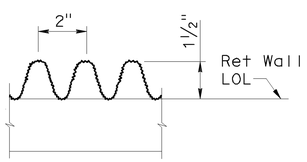

FRACTURED RIB TEXTURE (PROJECTING)

No Scale

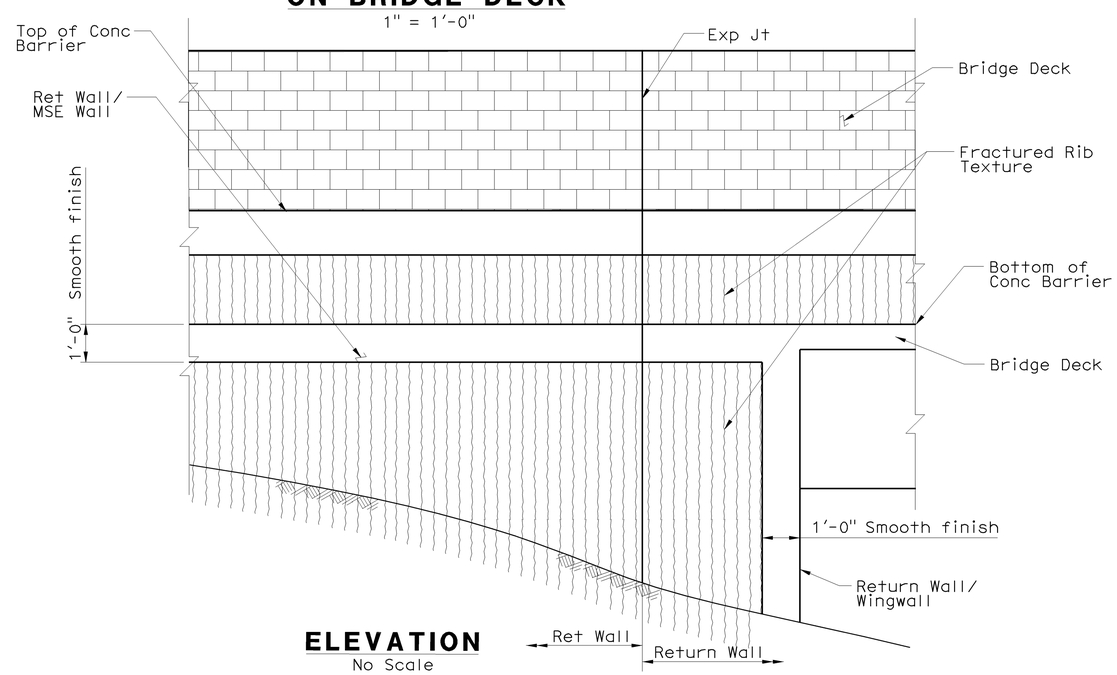

ELEVATION

No Scale

NOTE:
THE CONTRACTOR SHALL VERIFY ALL CONTROLLING FIELD DIMENSIONS BEFORE ORDERING OR FABRICATING ANY MATERIAL.

DESIGN OVERSIGHT
6-24-09
SIGN OFF DATE

	BY	CHECKED
DESIGN	K. Allam/M. Carbuccia	S. Megally/Y. Deng
DETAILS	I. Karkoutli	S. Megally/Y. Deng
QUANTITIES	L. Khaleghi	V. Nong

PREPARED FOR THE STATE OF CALIFORNIA DEPARTMENT OF TRANSPORTATION

Alaedin Moubayed
PROJECT ENGINEER

BRIDGE NO. 55-0459
POST MILE 16.4

ORANGETHORPE AVE UC (WIDEN)
CONCRETE BARRIER TYPE 736 (MOD)

DESIGN DETAIL SHEET (ENGLISH) (REV. 2/25/05)

ORIGINAL SCALE IN INCHES FOR REDUCED PLANS 0 1 2 3

CU 12
EA 0F0311

DISREGARD PRINTS BEARING EARLIER REVISION DATES

REVISION DATES (PRELIMINARY STAGE ONLY)

SHEET 23 OF 32

FILE => 55-0459-t-brdt.dgn

USERNAME => trlenard DATE PLOTTED => 16-DEC-2009 TIME PLOTTED => 13:43

DIST	COUNTY	ROUTE	POST MILES TOTAL PROJECT	SHEET No	TOTAL SHEETS
12	Ora	57	16.2/18.6	869	960

Khaled Allam 6/15/09
REGISTERED CIVIL ENGINEER DATE

12-14-09
PLANS APPROVAL DATE

REGISTERED PROFESSIONAL ENGINEER Khaled Allam No. 67110 Exp. 9/30/10 CIVIL STATE OF CALIFORNIA

The State of California or its officers or agents shall not be responsible for the accuracy or completeness of electronic copies of this plan sheet.

OCTA
550 SOUTH MAIN STREET
ORANGE, CA 92863

PBS&J
625 THE CITY DRIVE SOUTH, SUITE 200
ORANGE, CA 92868

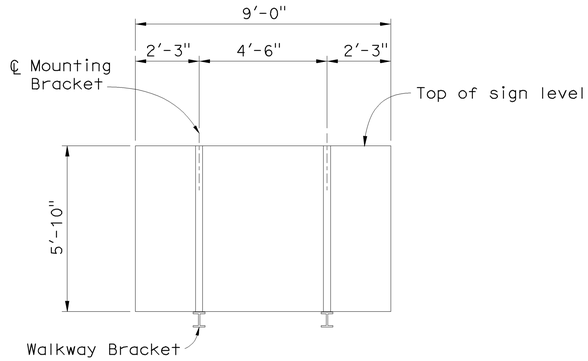

MOUNTING BRACKET ASSEMBLY SPACING

3/8" = 1'-0"

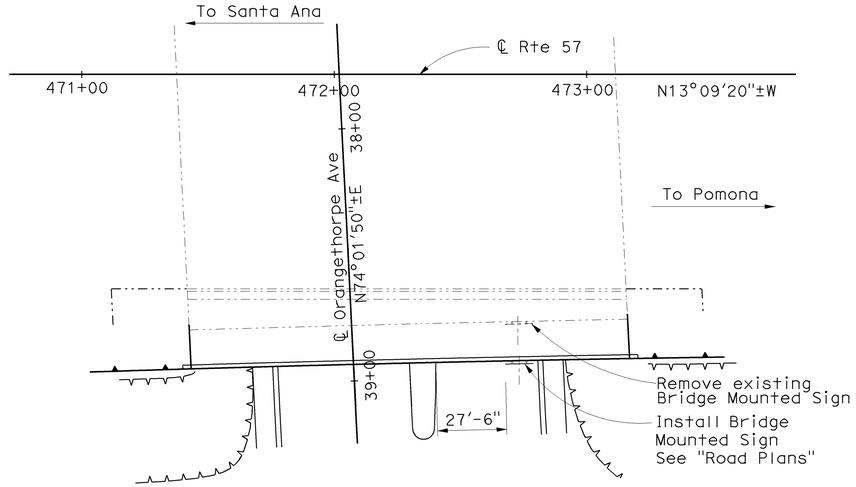

LOCATION PLAN

1" = 30'

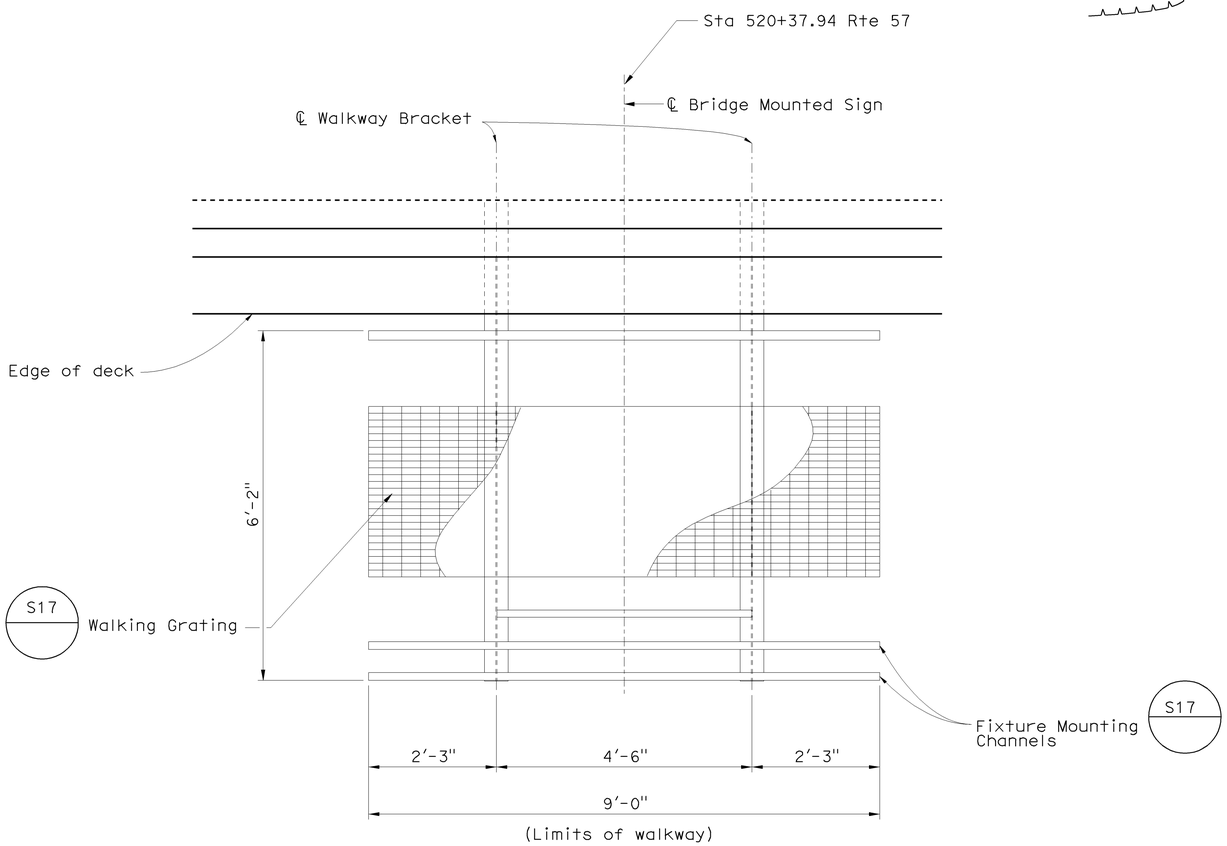

LAYOUT

3/4" = 1'-0"

NOTES:

1. For details not shown see "Standard Plans"
2. Unless otherwise shown all steel shall be galvanized after fabrication.
3. All high strength (H.S.) bolts shall be wrench tightened.
4. Min size fillet weld is 1/4" or smaller piece thickness unless noted otherwise.
5. Contractor to provide Anchor Bolt Layout before Anchor Bolts are placed.
6. Special care shall be taken to insure that the complete hinge and latch assembly will hold the safety railing in a steady manner, free of wobble while in a raised position. Max allowable displacement from vertical at top of railing when latched shall be 1".
7. Safety chain shall be 1/4" galvanized steel coil chain, approximately 12 links per foot. Length shall be min which allows lock-up of safety railing. Min of two safety chains at each end of safety railing. Material shall be Grade A3 high test chain ASTM A413.

NOTE:
THE CONTRACTOR SHALL VERIFY ALL CONTROLLING FIELD DIMENSIONS BEFORE ORDERING OR FABRICATING ANY MATERIAL.

Jon Hanaguchi
DESIGN OVERSIGHT Jon Hanaguchi
6-24-09
SIGN OFF DATE

	BY	CHECKED
DESIGN	K. Allam/M. Carbuccia	S. Megally/Y. Deng
DETAILS	I. Karkoutli	S. Megally/Y. Deng
QUANTITIES	L. Khaleghi	V. Nong

PREPARED FOR THE STATE OF CALIFORNIA DEPARTMENT OF TRANSPORTATION

Alaedin Moubayed
PROJECT ENGINEER

BRIDGE NO. 55-0459
POST MILE 16.4

ORANGETHORPE AVE UC (WIDEN)
BRIDGE MOUNTED SIGN DETAILS NO. 1

DESIGN DETAIL SHEET (ENGLISH) (REV. 2/25/05)

ORIGINAL SCALE IN INCHES FOR REDUCED PLANS 0 1 2 3

CU 12
EA 0F0311

DISREGARD PRINTS BEARING EARLIER REVISION DATES

REVISION DATES (PRELIMINARY STAGE ONLY)

SHEET 24 OF 32

FILE => 55-0459-u-bmsdt01.dgn

USERNAME => friehard DATE PLOTTED => 16-DEC-2009 TIME PLOTTED => 13:44

DIST	COUNTY	ROUTE	POST MILES TOTAL PROJECT	SHEET No	TOTAL SHEETS
12	Ora	57	16.2/18.6	870	960

Khaled Allam 6/15/09
REGISTERED CIVIL ENGINEER DATE

12-14-09
PLANS APPROVAL DATE

REGISTERED PROFESSIONAL ENGINEER Khaled Allam No. 67110 Exp. 9/30/10 CIVIL STATE OF CALIFORNIA

The State of California or its officers or agents shall not be responsible for the accuracy or completeness of electronic copies of this plan sheet.

OCTA
550 SOUTH MAIN STREET
ORANGE, CA 92863

PBS&J
625 THE CITY DRIVE SOUTH, SUITE 200
ORANGE, CA 92868

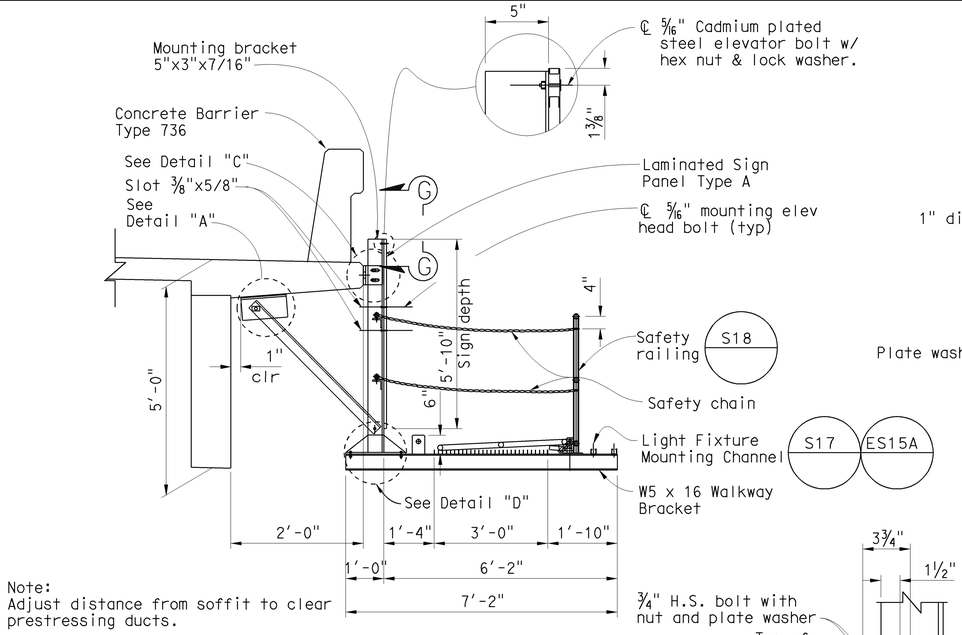

Note:
Adjust distance from soffit to clear prestressing ducts.

TYPICAL SECTION

No Scale

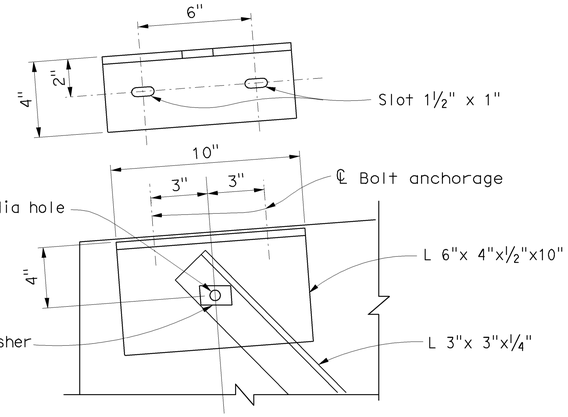

DETAIL "A"

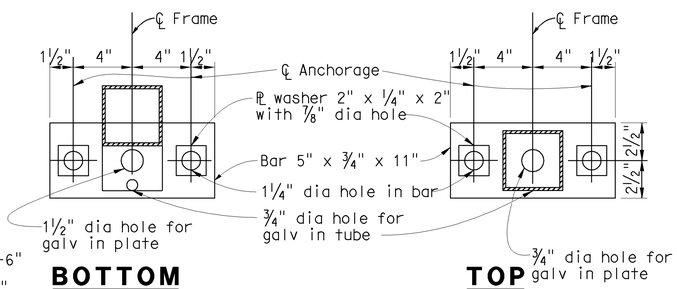

BOTTOM

TOP

ANCHOR PLATE DETAILS

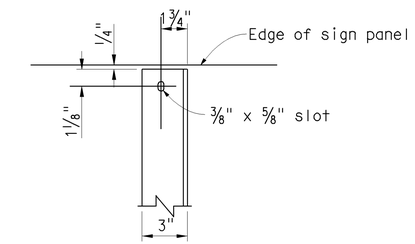

SECTION G-G

NOTE: For notes, See "General Plan" sheet.

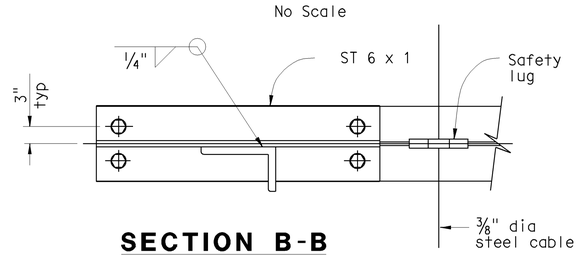

SECTION B-B

No Scale

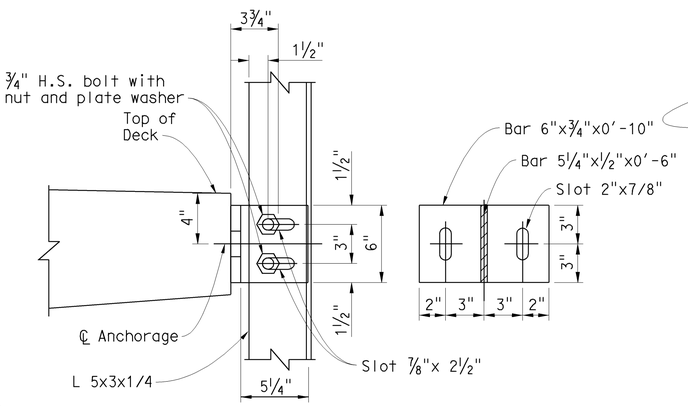

DETAIL C

No Scale

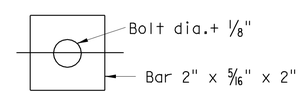

PLATE WASHER

No Scale

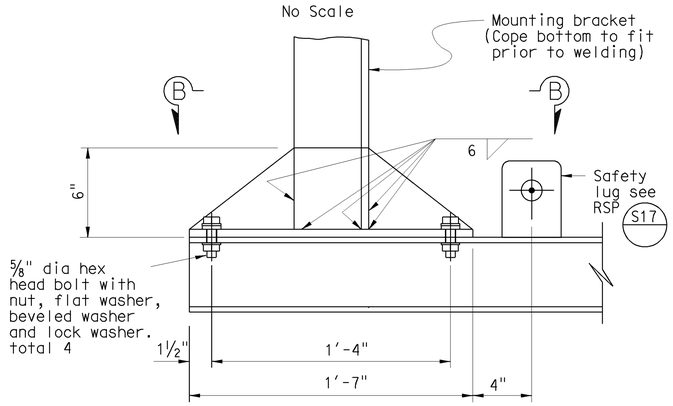

DETAIL D

No Scale

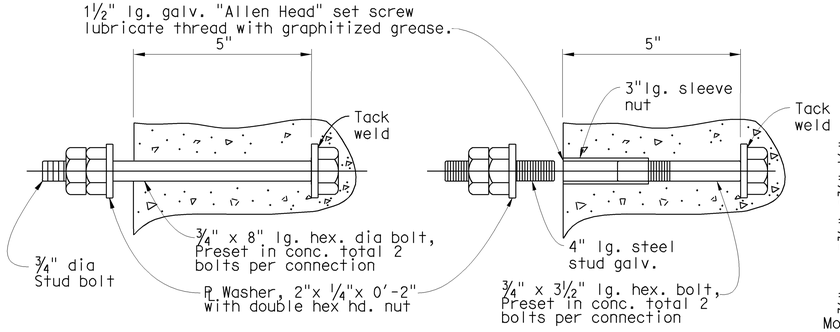

CIP BOLT ANCHORAGE

No Scale

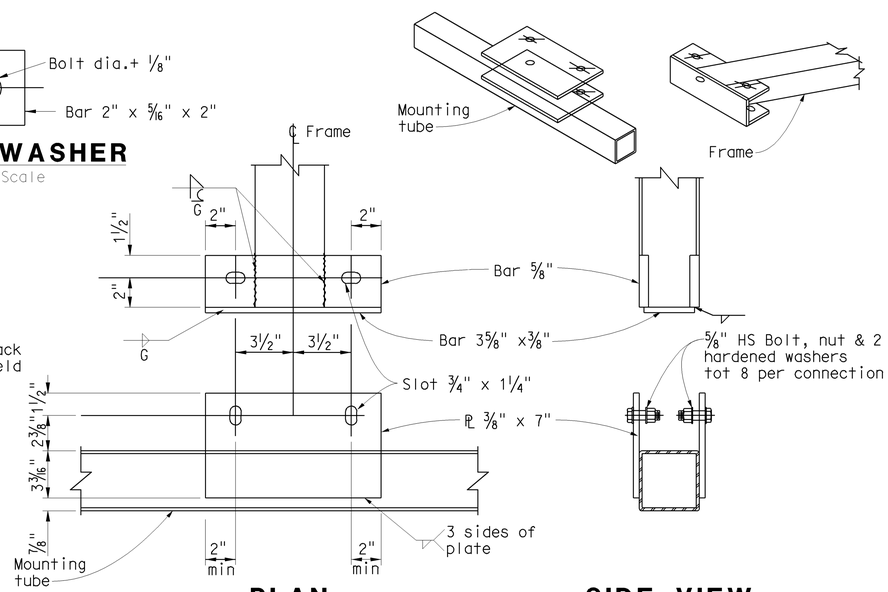

PLAN

SIDE VIEW

FRAME - MOUNTING TUBE CONNECTION

Scale 1:5

NOTE:
THE CONTRACTOR SHALL VERIFY ALL CONTROLLING FIELD DIMENSIONS BEFORE ORDERING OR FABRICATING ANY MATERIAL.

Jon Hamaguchi
DESIGN OVERSIGHT

6-24-09
SIGN OFF DATE

	BY	CHECKED
DESIGN	K. Allam/M. Carbuccia	S. Megally/Y. Deng
DETAILS	I. Karkoutli	S. Megally/Y. Deng
QUANTITIES	L. Khaleghi	V. Nong

PREPARED FOR THE STATE OF CALIFORNIA DEPARTMENT OF TRANSPORTATION

Alaedin Moubayed
PROJECT ENGINEER

BRIDGE NO. 55-0459
POST MILE 16.4

ORANGETHORPE AVE UC (WIDEN)
BRIDGE MOUNTED SIGN DETAILS NO. 2

DESIGN DETAIL SHEET (ENGLISH) (REV. 2/25/05)

ORIGINAL SCALE IN INCHES FOR REDUCED PLANS 0 1 2 3

CU 12
EA 0F0311

DISREGARD PRINTS BEARING EARLIER REVISION DATES

REVISION DATES (PRELIMINARY STAGE ONLY)

SHEET 25 OF 32

FILE => 55-0459-u-bmsdt02.dgn

USERNAME => trlenard DATE PLOTTED => 16-DEC-2009 TIME PLOTTED => 13:44

DIST	COUNTY	ROUTE	POST MILES TOTAL PROJECT	SHEET No	TOTAL SHEETS
12	Ora	57	16.2/18.6	871	960

Khaled Allam 6/15/09
REGISTERED CIVIL ENGINEER DATE

12-14-09
PLANS APPROVAL DATE

The State of California or its officers or agents shall not be responsible for the accuracy or completeness of electronic copies of this plan sheet.

REGISTERED PROFESSIONAL ENGINEER — Khaled Allam No. 67110 Exp. 9/30/10 CIVIL — STATE OF CALIFORNIA

OCTA
550 SOUTH MAIN STREET
ORANGE, CA 92863

PBS&J
625 THE CITY DRIVE SOUTH, SUITE 200
ORANGE, CA 92868

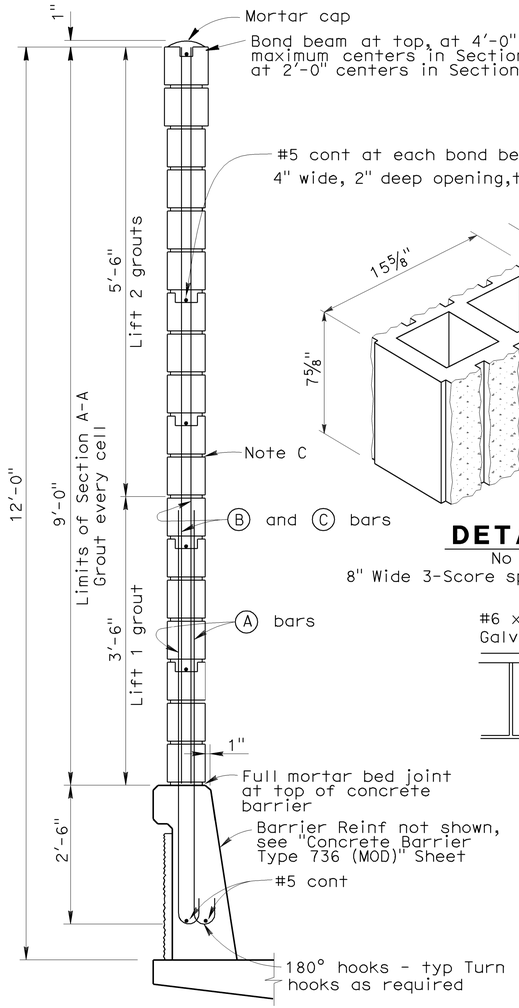

SOUNDWALL SECTION

No Scale

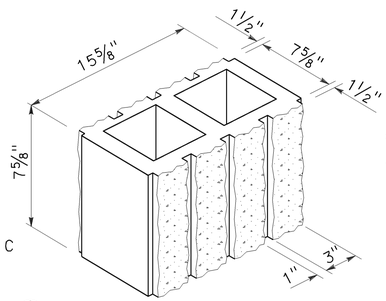

DETAIL B

No Scale

8" Wide 3-Score split face both sides

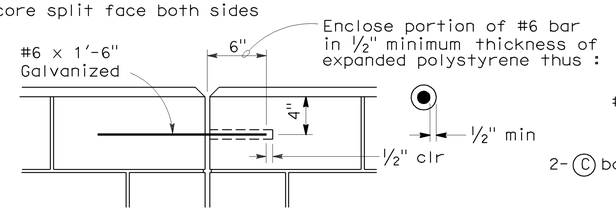

DETAIL A

NO Scale

REBAR LEGENDS

Ⓐ #6 5'-10" @ 1'-4"

Ⓑ #5 x 5'-6" @ 1'-4"

Ⓒ #5 x 8'-11" @ 1'-4"

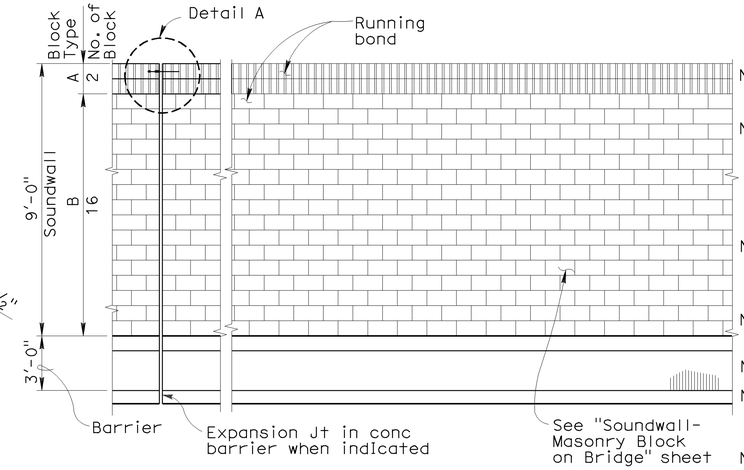

SOUNDWALL - ARCHITECTURAL TREATMENT DETAIL

NO Scale

GENERAL NOTES

Note A: Nominal block size shall be 8" x 6" x 16" For type of block, see "Masonry Block type Table".

Note B: When blocks are laid in stacked bond, ladder type, galvanized joint reinforcement shall be provided. A minimum of 2 - 0.148" wires continuous at 4'-0" maximum to be used. Locate reinforcement in joints that are at the approximate midpoint between bond beams.

Note C: Horizontal joints shall be tooled concave or may be weathered. Vertical joints shall be tooled concave or may be raked.

Note D: All masonry to be high strength unless otherwise noted.

Note E: Class 2 concrete to be used for barrier.

Note F: Expansion joints in concrete barrier and masonry block to match deck joints and at ends of wingwalls.

Note G: Expansion joints in soundwall (Masonry Block) shall be at each support, center of span, and at ends of each wingwall.

Note H: See "General Plan" sheet for architectural treatment at concrete barrier recess.

MASONRY BLOCK TYPE TABLE

Block Type	Block Description
A	Wall cap rows (Sand Colored scored split face concrete) 3-scored, see Detail B
B	Main Wall surface (Sand Colored split face concrete)

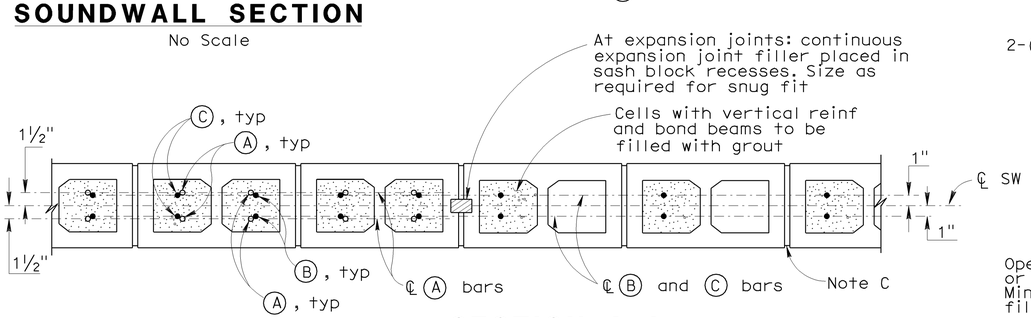

SECTION A-A

No Scale

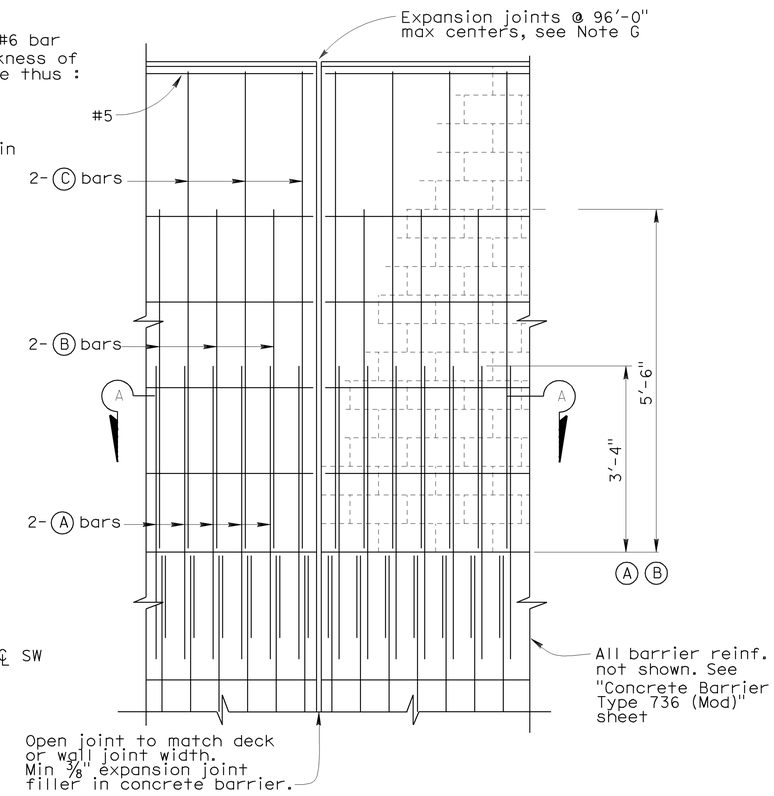

DECK AND WALL JOINT ELEVATION

No Scale

DESIGN NOTES

DESIGN

Building Code Requirements for Masonry Srtuctures (ACI 530-05) and the Bridge Design Specifications.

DESIGN WIND LOAD
37 psf

DESIGN SEISMIC LOAD
2.0 Dead load

REINFORCED CONCRETE
f'c = 3,600 psi
fy = 60,000 psi

CONCRETE MASONRY
HIGH STRENGTH
f'm = 2,500 psi
fy = 60,000 psi

LOAD FACTORS AND LOAD COMBINATIONS

Load Factor Design (LFD)

Group A: βD+1.7 E+1.7 SC
Group B: βD+1.7 E+1.3 W
Group C: βD+1.3 E+1.0 EQE
Group D: βD+1.3 E+1.0 EQD
Group E: βD+1.1 E+0.85 (EQE+EQD)
Group XI: 1.0D + 1.0 CT

Where : β = 0.9 or 1.2, whichever controls in design
D = Dead load
E = Lateral earth pressure
SC = Live load surcharge
W = Wind load
EQD = Seismic dead load
EQE = Seismic earth load
CT = Collision Load

STRENGTH REDUCTION FACTORS, Ø

Reinforced Concrete :
For flexure ..... Ø = 0.90
For shear ..... Ø = 0.85

Concrete masonry:
For flexure ..... Ø = 0.80
For shear ..... Ø = 0.60

Note 1:
Barrier, Deck and Concrete Masonry are designed by the Strength Design Method.

NOTE:
THE CONTRACTOR SHALL VERIFY ALL CONTROLLING FIELD DIMENSIONS BEFORE ORDERING OR FABRICATING ANY MATERIAL.

DESIGN OVERSIGHT

SIGN OFF DATE

	BY	CHECKED
DESIGN	K. Allam/M. Carbuccia	S. Megally/Y. Deng
DETAILS	I. Karkoutli	S. Megally/Y. Deng
QUANTITIES	L. Khaleghi	V. Nong

PREPARED FOR THE STATE OF CALIFORNIA DEPARTMENT OF TRANSPORTATION

Alaedin Moubayed
PROJECT ENGINEER

BRIDGE NO. 55-0459
POST MILE 16.4

ORANGETHORPE AVE UC (WIDEN)

SOUNDWALL - MASONRY BLOCK ON BRIDGE

DESIGN DETAIL SHEET (ENGLISH) (REV. 2/25/05)

ORIGINAL SCALE IN INCHES FOR REDUCED PLANS 0 1 2 3

CU 12
EA 0F0311

DISREGARD PRINTS BEARING EARLIER REVISION DATES

REVISION DATES (PRELIMINARY STAGE ONLY)

SHEET 26 OF 32

FILE => 55-0459-v-swmb.dgn

USERNAME => trlenard DATE PLOTTED => 16-DEC-2009 TIME PLOTTED => 13:44

DIST.	COUNTY	ROUTE	KILOMETER POST TOTAL PROJECT	SHEET NO.	TOTAL SHEETS
12	Ora	57	16.2/18.6	872	960

Khaled Allam
REGISTERED ENGINEER - CIVIL

12-14-09
PLANS APPROVAL DATE

REGISTERED PROFESSIONAL ENGINEER
Khaled Allam
No. 67110
Exp. 9/30/10
CIVIL
STATE OF CALIFORNIA

The State of California or its officers or agents shall not be responsible for the accuracy or completeness of electronic copies of this plan sheet.

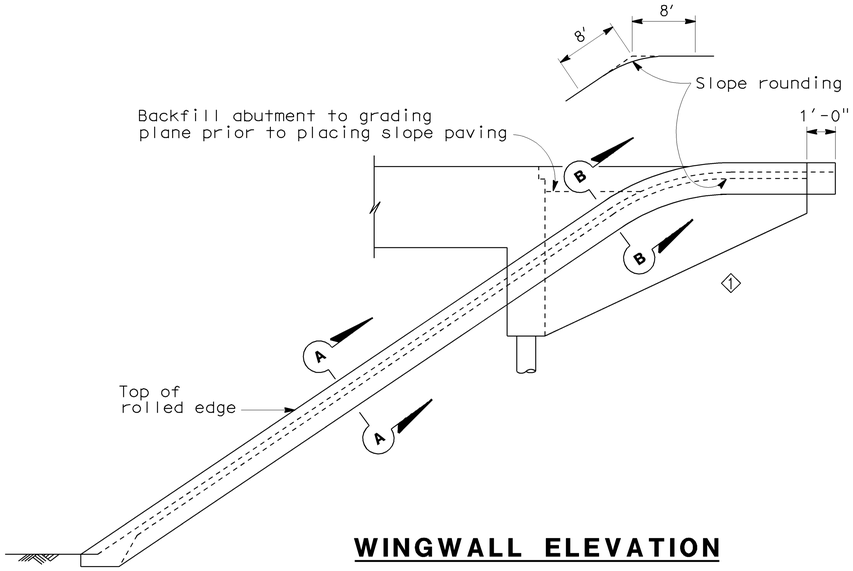

WINGWALL ELEVATION

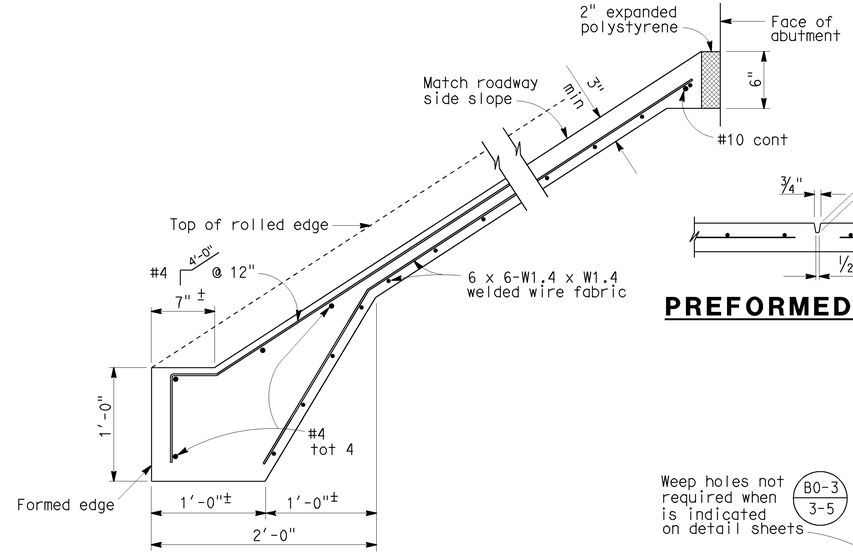

TYPICAL SECTION - CONCRETE PAVING

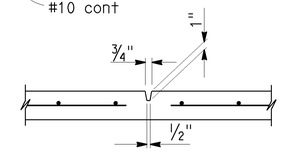

PREFORMED GROOVE

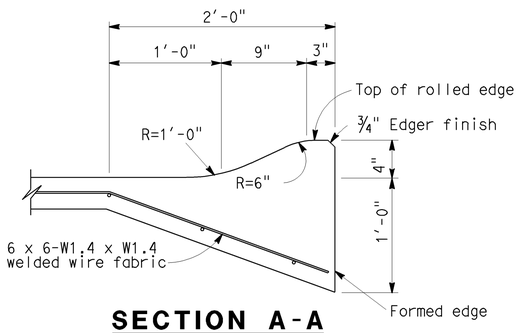

SECTION A-A

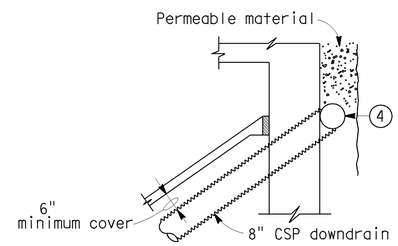

TYPICAL - DRAIN CONNECTION

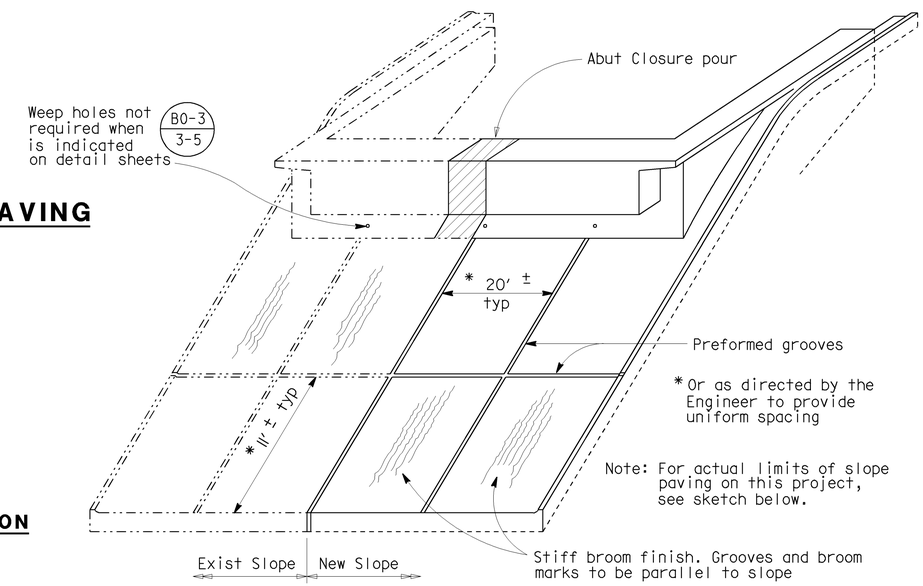

PICTORIAL VIEW OF TYPICAL INSTALLATION

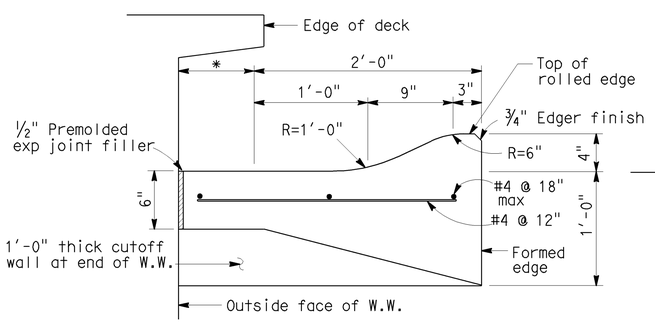

SECTION B-B

* This dimension becomes zero when edge of deck is at outside face of W.W.

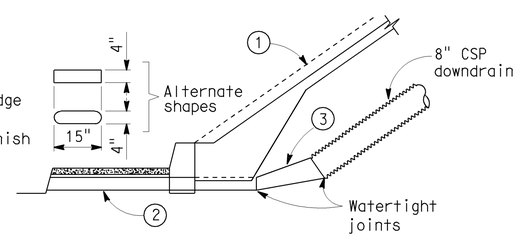

TYPICAL - WITH SIDEWALK

DRAINAGE DETAILS

Note: Drainage details are only applicable when B0-3/3-5 is indicated on detail sheets.

1. Top of rolled edge
2. Conduit: 1/16" galv corrugated steel or 0.109" smooth galv steel
3. Taper: 1/16" / 0.109" smooth galv steel
4. 8" perforated steel pipe (1/16" thick) underdrain behind abutment. Connect to downdrain as shown on limits of Slope Paving & Drainage layout.

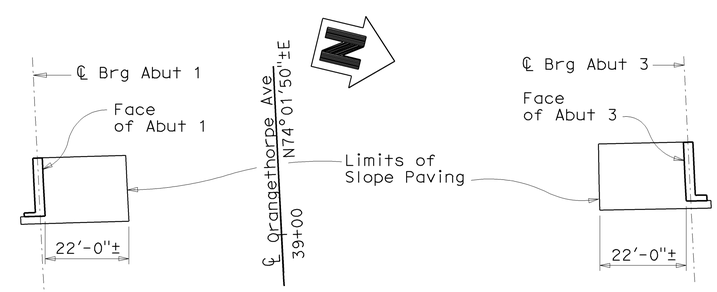

LIMITS OF SLOPE PAVING & DRAINAGE LAYOUT

1 Deleted Details

STANDARD DRAWING				
RELEASE DATE Revised	DESIGN	BY M. TRAFFALIS	CHECKED E. THORKILDSEN	RELEASED BY
FILE NO. xs3-110	DETAILS	BY R. YEE	CHECKED E. THORKILDSEN	
	SUBMITTED	BY M. HA	DRAWING DATE 4/98	OFFICE CHIEF

STATE OF CALIFORNIA
DEPARTMENT OF TRANSPORTATION

DIVISION OF ENGINEERING SERVICES

BRIDGE NO. 55-0459
KILOMETER POST 16.4

ORANGETHORPE AVE UC (WIDEN)
SLOPE PAVING

DS OSD 2147A (METRIC) (REV. 2/25/97)

ORIGINAL SCALE IN MILLIMETERS FOR REDUCED PLANS 0 10 20 30 40 50 60 70 80 90 100

CU 12
EA OF 0311

DISREGARD PRINTS BEARING EARLIER REVISION DATES 09/17/08

REVISION DATES (PRELIMINARY STAGE ONLY)

SHEET 27 OF 32

FILE => 55-0459-w-slp.dgn

DATE PLOTTED => 16-DEC-2009 TIME PLOTTED => 13:44

FILE => 55-0459-w-slp.dgn
55-0459-w-slp.dgn

DIST	COUNTY	ROUTE	POST MILES TOTAL PROJECT	SHEET No	TOTAL SHEETS
12	Ora	57	16.2/18.6	873	960

REGISTERED ENGINEER Lino Cheang DATE 6/15/09

12-14-09
PLANS APPROVAL DATE

REGISTERED PROFESSIONAL ENGINEER L. CHEANG NO. GE 2345 EXP. 9-30-09 GEOTECHNICAL STATE OF CALIFORNIA

The State of California or its officers or agents shall not be responsible for the accuracy or completeness of electronic copies of this plan sheet.

ORANGE COUNTY TRANSPORTATION AUTHORITY
550 S. MAIN STREET
ORANGE, CA 92863-1584

EARTH MECHANICS, INC.
17660 NEWHOPE STREET, SUITE E
FOUNTAIN VALLEY, CA 92708

REFERENCE: CALTRANS SOIL & ROCK LOGGING, CLASSIFICATION, AND PRESENTATION MANUAL (JUNE 2007)

CEMENTATION

Description	Criteria
Weak	Crumbles or breaks with handling or little finger pressure.
Moderate	Crumbles or breaks with considerable finger pressure.
Strong	Will not crumble or break with finger pressure.

CONSISTENCY OF COHESIVE SOILS

Description	Unconfined Compressive Strength (tsf)	Pocket Penetrometer Measurement (tsf)	Torvane Measurement (tsf)	Field Approximation
Very Soft	< 0.25	< 0.25	< 0.12	Easily penetrated several inches by fist
Soft	0.25 to 0.50	0.25 to 0.50	0.12 to 0.25	Easily penetrated several inches by thumb
Medium Stiff	0.50 to 1.0	0.50 to 1.0	0.25 to 0.50	Penetrated several inches by thumb with moderate effort
Stiff	1 to 2	1 to 2	0.50 to 1.0	Readily indented by thumb but penetrated only with great effort
Very Stiff	2 to 4	2 to 4	1.0 to 2.0	Readily indented by thumbnail
Hard	> 4.0	> 4.0	> 2.0	Indented by thumbnail with difficulty

BOREHOLE IDENTIFICATION

Symbol	Hole Type	Description
Size	A	Auger Boring
Size	R P	Rotary drilled boring Rotary percussion boring (air)
Size	R	Rotary drilled diamond core
Size	HD HA	Hand driven (1-inch soil tube) Hand Auger
●	D	Dynamic Cone Penetration Boring
▲	CPT	Cone Penetration Test (ASTM D 5778-95)
⬚	O	Other

Note: Size in inches.

PLASTICITY OF FINE-GRAINED SOILS

Description	Criteria
Nonplastic	A 1/8-inch thread cannot be rolled at any water content.
Low	The thread can barely be rolled and the lump cannot be formed when drier than the plastic limit.
Medium	The thread is easy to roll and not much time is required to reach the plastic limit. The thread cannot be rerolled after reaching the plastic limit. The lump crumbles when drier than the plastic limit.
High	It takes considerable time rolling and kneading to reach the plastic limit. The thread can be rerolled several times after reaching the plastic limit. The lump can be formed without crumbling when drier than the plastic limit.

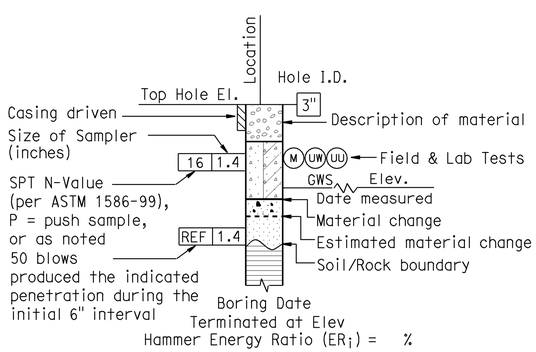

ROTARY BORING

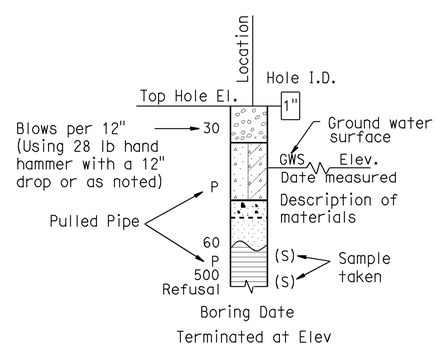

HAND BORING

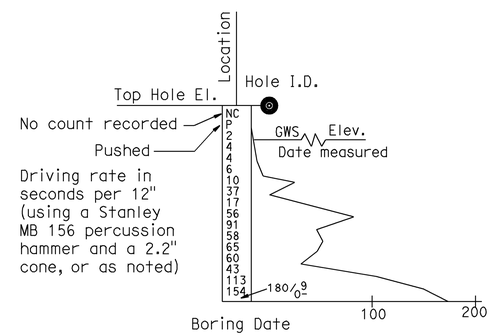

DYNAMIC CONE PENETRATION BORING

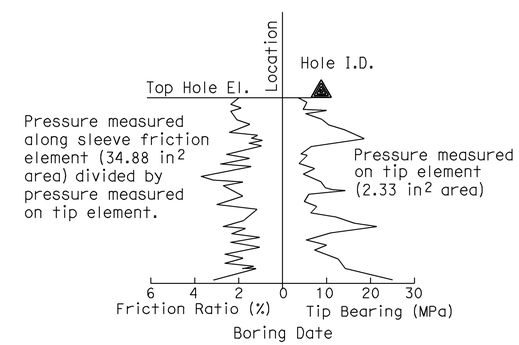

CONE PENETRATION TEST (CPT) SOUNDING

DESIGN OVERSIGHT Jon Hamaguchi
6-24-09
SIGN OFF DATE

DRAWN BY: J.Fang
CHECKED BY: L.Cheang

FIELD INVESTIGATION BY:
R.Jie

PREPARED FOR THE STATE OF CALIFORNIA DEPARTMENT OF TRANSPORTATION

L.Cheang
PROJECT ENGINEER

BRIDGE NO. 55-0459
POST MILES 16.4

ORANGETHORPE AVENUE UC (WIDEN)
LOG OF TEST BORINGS 1 OF 3

DESIGN GENERAL PLAN SHEET (ENGLISH) (REV. 2/25/05)

ORIGINAL SCALE IN INCHES FOR REDUCED PLANS 0 1 2 3

CU 12
EA 0F0311

DISREGARD PRINTS BEARING EARLIER REVISION DATES

REVISION DATES (PRELIMINARY STAGE ONLY)

SHEET 28 OF 32

FILE => 55-0459-z-1tb01.dgn

USERNAME => rtrienord DATE PLOTTED => 16-DEC-2009 TIME PLOTTED => 13:44

REFERENCE: CALTRANS SOIL & ROCK LOGGING, CLASSIFICATION, AND PRESENTATION MANUAL (JUNE 2007)

DIST	COUNTY	ROUTE	POST MILES TOTAL PROJECT	SHEET No	TOTAL SHEETS
12	Ora	57	16.2/18.6	874	960

Lino Cheang 6/15/09
REGISTERED ENGINEER DATE

12-14-09
PLANS APPROVAL DATE

REGISTERED PROFESSIONAL ENGINEER L. CHEANG NO. GE 2345 EXP. 9-30-09 GEOTECHNICAL STATE OF CALIFORNIA

The State of California or its officers or agents shall not be responsible for the accuracy or completeness of electronic copies of this plan sheet.

ORANGE COUNTY TRANSPORTATION AUTHORITY
550 S. MAIN STREET
ORANGE, CA 92863-1584

EARTH MECHANICS, INC.
17660 NEWHOPE STREET, SUITE E
FOUNTAIN VALLEY, CA 92708

GROUP SYMBOLS AND NAMES

Graphic/Symbol	Group Names
GW	Well-graded GRAVEL Well-graded GRAVEL with SAND
GP	Poorly graded GRAVEL Poorly graded GRAVEL with SAND
GW-GM	Well-graded GRAVEL with SILT Well-graded GRAVEL with SILT and SAND
GW-GC	Well-graded GRAVEL with CLAY (or SILTY CLAY) Well-graded GRAVEL with CLAY and SAND (or SILTY CLAY and SAND)
GP-GM	Poorly graded GRAVEL with SILT Poorly graded GRAVEL with SILT and SAND
GP-GC	Poorly graded GRAVEL with CLAY (or SILTY CLAY) Poorly graded GRAVEL with CLAY and SAND (or SILTY CLAY and SAND)
GM	SILTY GRAVEL SILTY GRAVEL with SAND
GC	CLAYEY GRAVEL CLAYEY GRAVEL with SAND
GC-GM	SILTY, CLAYEY GRAVEL SILTY, CLAYEY GRAVEL with SAND
SW	Well-graded SAND Well-graded SAND with GRAVEL
SP	Poorly graded SAND Poorly graded SAND with GRAVEL
SW-SM	Well-graded SAND with SILT Well-graded SAND with SILT and GRAVEL
SW-SC	Well-graded SAND with CLAY (or SILTY CLAY) Well-graded SAND with CLAY and GRAVEL (or SILTY CLAY and GRAVEL)
SP-SM	Poorly graded SAND with SILT Poorly graded SAND with SILT and GRAVEL
SP-SC	Poorly graded SAND with CLAY (or SILTY CLAY) Poorly graded SAND with CLAY and GRAVEL (or SILTY CLAY and GRAVEL)
SM	SILTY SAND SILTY SAND with GRAVEL
SC	CLAYEY SAND CLAYEY SAND with GRAVEL
SC-SM	SILTY, CLAYEY SAND SILTY, CLAYEY SAND with GRAVEL
PT	PEAT
	COBBLES COBBLES and BOULDERS BOULDERS

Graphic/Symbol	Group Names
CL	Lean CLAY Lean CLAY with SAND Lean CLAY with GRAVEL SANDY lean CLAY SANDY lean CLAY with GRAVEL GRAVELLY lean CLAY GRAVELLY lean CLAY with SAND
CL-ML	SILTY CLAY SILTY CLAY with SAND SILTY CLAY with GRAVEL SANDY SILTY CLAY SANDY SILTY CLAY with GRAVEL GRAVELLY SILTY CLAY GRAVELLY SILTY CLAY with SAND
ML	SILT SILT with SAND SILT with GRAVEL SANDY SILT SANDY SILT with GRAVEL GRAVELLY SILT GRAVELLY SILT with SAND
OL	ORGANIC lean CLAY ORGANIC lean CLAY with SAND ORGANIC lean CLAY with GRAVEL SANDY ORGANIC lean CLAY SANDY ORGANIC lean CLAY with GRAVEL GRAVELLY ORGANIC lean CLAY GRAVELLY ORGANIC lean CLAY with SAND
OL	ORGANIC SILT ORGANIC SILT with SAND ORGANIC SILT with GRAVEL SANDY ORGANIC SILT SANDY ORGANIC SILT with GRAVEL GRAVELLY ORGANIC SILT GRAVELLY ORGANIC SILT with SAND
CH	Fat CLAY Fat CLAY with SAND Fat CLAY with GRAVEL SANDY fat CLAY SANDY fat CLAY with GRAVEL GRAVELLY fat CLAY GRAVELLY fat CLAY with SAND
MH	Elastic SILT Elastic SILT with SAND Elastic SILT with GRAVEL SANDY elastic SILT SANDY elastic SILT with GRAVEL GRAVELLY elastic SILT GRAVELLY elastic SILT with SAND
OH	ORGANIC fat CLAY ORGANIC fat CLAY with SAND ORGANIC fat CLAY with GRAVEL SANDY ORGANIC fat CLAY SANDY ORGANIC fat CLAY with GRAVEL GRAVELLY ORGANIC fat CLAY GRAVELLY ORGANIC fat CLAY with SAND
OH	ORGANIC elastic SILT ORGANIC elastic SILT with SAND ORGANIC elastic SILT with GRAVEL SANDY ORGANIC elastic SILT SANDY ORGANIC elastic SILT with GRAVEL GRAVELLY ORGANIC elastic SILT GRAVELLY ORGANIC elastic SILT with SAND
OL/OH	ORGANIC SOIL ORGANIC SOIL with SAND ORGANIC SOIL with GRAVEL SANDY ORGANIC SOIL SANDY ORGANIC SOIL with GRAVEL GRAVELLY ORGANIC SOIL GRAVELLY ORGANIC SOIL with SAND

FIELD AND LABORATORY TESTING

- (C) Consolidation (ASTM D 2435)
- (CL) Collapse Potential (ASTM D 5333)
- (CP) Compaction Curve (CTM 216)
- (CR) Corrosivity Testing (CTM 643, CTM 422, CTM 417)
- (CU) Consolidated Undrained Triaxial (ASTM D 4767)
- (DS) Direct Shear (ASTM D 3080)
- (EI) Expansion Index (ASTM D 4829)
- (M) Moisture Content (ASTM D 2216)
- (OC) Organic Content-% (ASTM D 2974)
- (P) Permeability (CTM 220)
- (PA) Particle Size Analysis (ASTM D 422)
- (PI) Plasticity Index (AASHTO T 90) Liquid Limit (AASHTO T 89)
- (PL) Point Load Index (ASTM D 5731)
- (PM) Pressure Meter
- (PP) Pocket Penetrometer
- (R) R-Value (CTM 301)
- (SE) Sand Equivalent (CTM 217)
- (SG) Specific Gravity (AASHTO T 100)
- (SL) Shrinkage Limit (ASTM D 427)
- (SW) Swell Potential (ASTM D 4546)
- (TV) Pocket Torvane
- (UC) Unconfined Compression-Soil (ASTM D 2166) Unconfined Compression-Rock (ASTM D 2938)
- (UU) Unconsolidated Undrained Triaxial (ASTM D 2850)
- (UW) Unit Weight (ASTM D 4767)
- (VS) Vane Shear (AASHTO T 223)

APPARENT DENSITY OF COHESIONLESS SOILS

Description	SPT N_{60} (Blows / 12 inches)
Very loose	0 - 4
Loose	5 - 10
Medium Dense	11 - 30
Dense	31 - 50
Very Dense	> 50

MOISTURE

Description	Criteria
Dry	Absence of moisture, dusty, dry to the touch
Moist	Damp but no visible water
Wet	Visible free water, usually soil is below water table

PERCENT OR PROPORTION OF SOILS

Description	Criteria
Trace	Particles are present but estimated to be less than 5%
Few	5 to 10%
Little	15 to 25%
Some	30 to 45%
Mostly	50 to 100%

PARTICLE SIZE

Description		Size
Boulder		> 12"
Cobble		3" to 12"
Gravel	Coarse	3/4" to 3"
	Fine	No. 4 to 3/4"
Sand	Coarse	No. 10 to No. 4
	Medium	No. 40 to No. 10
	Fine	No. 200 to No. 40

Jon Hamaguchi
DESIGN OVERSIGHT Jon Hamaguchi
6-24-09
SIGN OFF DATE

DRAWN BY: J.Fang
CHECKED BY: L.Cheang

FIELD INVESTIGATION BY:
R.Jie

PREPARED FOR THE STATE OF CALIFORNIA DEPARTMENT OF TRANSPORTATION

L.Cheang
PROJECT ENGINEER

BRIDGE NO. 55-0459
POST MILES 16.4

ORANGETHORPE AVENUE UC (WIDEN)
LOG OF TEST BORINGS 2 OF 3

DESIGN GENERAL PLAN SHEET (ENGLISH) (REV. 2/25/05)

ORIGINAL SCALE IN INCHES FOR REDUCED PLANS 0 1 2 3

CU 12
EA 0F0311

DISREGARD PRINTS BEARING EARLIER REVISION DATES

REVISION DATES (PRELIMINARY STAGE ONLY)

SHEET 29 OF 32

FILE => 55-0459-z-1tb02.dgn

USERNAME => rfriehard DATE PLOTTED => 16-DEC-2009 TIME PLOTTED => 13:44

DIST	COUNTY	ROUTE	POST MILES TOTAL PROJECT	SHEET No	TOTAL SHEETS
12	Ora	57	16.2/18.6	875	960

REGISTERED ENGINEER Lino Cheang DATE 6/15/09

12-14-09
PLANS APPROVAL DATE

REGISTERED PROFESSIONAL ENGINEER L. CHEANG NO. GE 2345 EXP. 9-30-09 GEOTECHNICAL STATE OF CALIFORNIA

The State of California or its officers or agents shall not be responsible for the accuracy or completeness of electronic copies of this plan sheet.

ORANGE COUNTY TRANSPORTATION AUTHORITY
550 S. MAIN STREET
ORANGE, CA 92863-1584

EARTH MECHANICS, INC.
17660 NEWHOPE STREET, SUITE E
FOUNTAIN VALLEY, CA 92708

BENCHMARKS:

Designation: 404-14-68 Elev = 210.124
Described by OCS 2003 - Found 3¾" OCS Aluminum Benchmark Disk Stamped "404-14-68", set in the Southwesterly Corner of a 4 ft by 8 ft Concrete Catch Basin. Monument is Located in the Northeasterly Corner of the Intersection of Placentia Avenue and the Atchinson Topeka Santa Fe Railway, 33.5 ft Easterly of the Centerline of Placentia Avenue and 87 ft Northerly of the Northerly Rail along the Railway. Monument is set Level with the Sidewalk.

Designation: 2G-25-70 Elev = 275.872
Described by OCS 2003 - Found 3¾" OCS Aluminum Benchmark Disk Stamped "2G-25-70", set in the Southeasterly Corner of a 4 ft by 6 ft Concrete Catch Basin. Monument is Located in the Northwesterly Corner of the Intersection of Yorba Linda Boulevard and Deerpark Drive, 75 ft Westerly of the Centerline of Deerpark and 46 ft Northerly of the Centerline of Yorba Linda. Monument is set Level with the Sidewalk.

NOTES:

(1) This LOTB sheet (Boring Record) was prepared in accordance with the Caltrans Soil and Rock Logging, Classification and Presentation Manual (June 2007)

(2) 2.4" samples were taken using a California Modified Sampler.

(3) An automatic trip hammer system consisting of a hammer weight of 140 lbs falling a distance of 30" was used to advance the drive sampler.

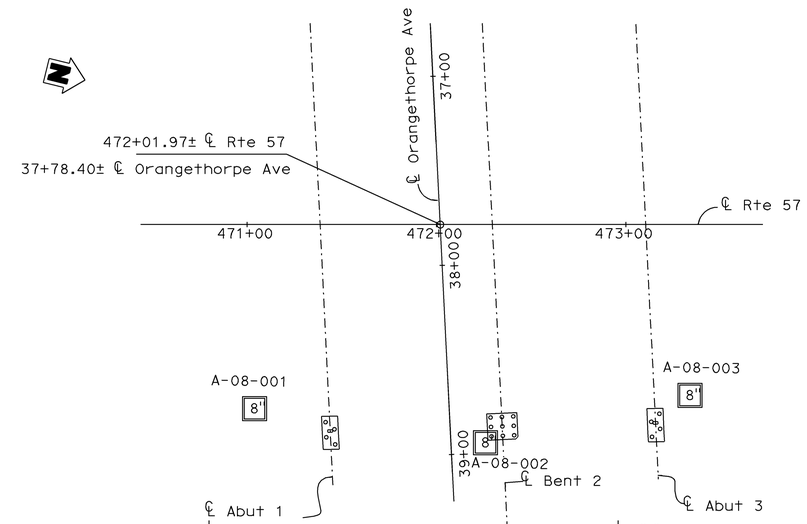

PLAN

1" = 40'

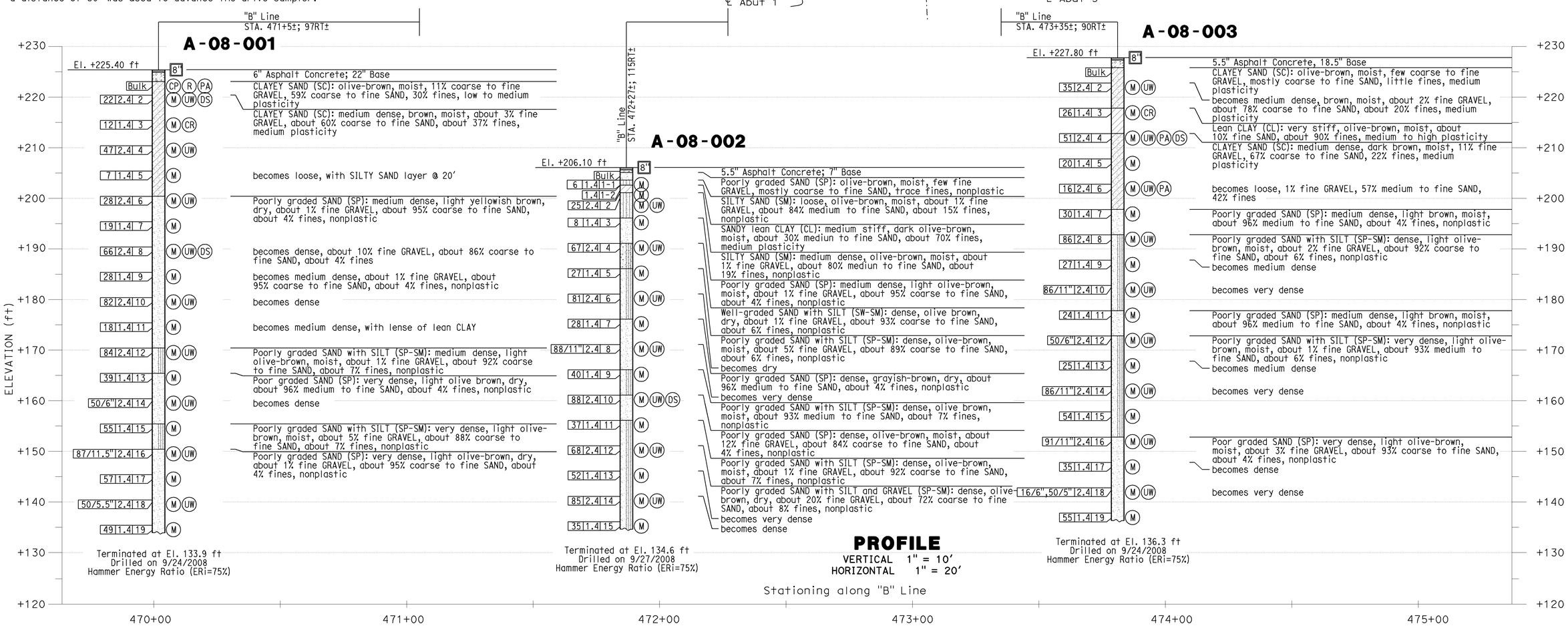

PROFILE

VERTICAL 1" = 10'
HORIZONTAL 1" = 20'

DESIGN OVERSIGHT Jon Hanaguchi
6-24-09
SIGN OFF DATE

DRAWN BY: J.Fang
CHECKED BY: L.Cheang

FIELD INVESTIGATION BY:
R.Jie

PREPARED FOR THE STATE OF CALIFORNIA DEPARTMENT OF TRANSPORTATION

L.Cheang
PROJECT ENGINEER

BRIDGE NO. 55-0459
POST MILES 16.4

ORANGETHORPE AVENUE UC (WIDEN)

LOG OF TEST BORINGS 3 OF 3

DESIGN GENERAL PLAN SHEET (ENGLISH) (REV. 2/25/05)

ORIGINAL SCALE IN INCHES FOR REDUCED PLANS 0 1 2 3

CU 12
EA 0F0311

DISREGARD PRINTS BEARING EARLIER REVISION DATES

REVISION DATES (PRELIMINARY STAGE ONLY)

SHEET 30 OF 32

FILE => 55-0459-z-ltb03.dgn

USERNAME => trlenard DATE PLOTTED => 16-DEC-2009 TIME PLOTTED => 13:44

DIST	COUNTY	ROUTE	POST MILES TOTAL PROJECT	SHEET NO.	TOTAL SHEETS
12	Ora	57, 91	15.6/16.6, 5.0/6.7	726	852

REGISTERED PROFESSIONAL ENGINEER

8-26-96
PLANS APPROVAL DATE

REGISTERED PROFESSIONAL ENGINEER LINO CHEANG No. C 41401 Exp. 09-30-99 CIVIL STATE OF CALIFORNIA

EARTH MECHANICS, INC.
Geotechnical & Earthquake Engineering
17660 NEWHOPE STREET, SUITE E • FOUNTAIN VALLEY, CA. 92708
Phone (714) 751-3826

THE STATE OF CALIFORNIA OR ITS OFFICERS OR AGENTS SHALL NOT BE RESPONSIBLE FOR THE ACCURACY OR COMPLETENESS OF ELECTRONIC COPIES OF THIS PLAN SHEET.

NOTES:

1. NO GROUNDWATER ENCOUNTERED.
2. ELEVATIONS BASED ON SURVEY BY COAST SURVEYING, INC.
3. BORING B-601 LOGGED BY ENRIQUE RIUTORT, STAFF ENGINEER.
4. BENCHMARK – 57/91-B-88(PM 15.9) -3.5 IN. DIA. CADT STA. MARK DISK SET IN EPOXY ON TOP OF PCC SIDEWALK ON THE NE'LY CORNER OF THE MIRALOMA AVE. BRIDGE OVER RTE-57 FWY, ABOUT 150 FT. E'LY OF ℄ OF RTE-57, 36 FT. N'LY OF ℄ OF MIRALOMA. ELEV. 229.49
5. B-1 TAKEN FROM ORIGINAL CALTRANS LOG OF TEST BORINGS. – (AS-BUILT DATE 7-25-69)

DIVISION OF ENGINEERING SERVICES - GEOTECHNICAL SERVICES

As-Built Log of Test Borings sheet is considered an informational document only. As such, the State of California registration seal with signature, license number and registration certificate expiration date confirm that this is a true and accurate copy of the original document. This drawing is available and presented only for the convenience of any bidder, contractor or other interested party.

DIST.	COUNTY	ROUTE	POST MILES -TOTAL PROJECT	Sheet No.	Total Sheets
12	Ora	57	16.2/18.6	876	960

REGISTERED CIVIL ENGINEER — DATE 6/15/09

ORANGETHORPE AVENUE UC (WIDEN)

AS-BUILT LOG OF TEST BORINGS NO. 1

NOTE: A COPY OF THIS LOG OF TEST BORINGS IS AVAILABLE AT OFFICE OF STRUCTURE MAINTENANCE AND INVESTIGATIONS, SACRAMENTO, CALIFORNIA

CU: 12 EA: 0F0311 — BRIDGE No. 55-0459 — Sheet 31 of 32

To accompany plans dated 12-14-09

REGISTERED PROFESSIONAL ENGINEER LINO C. CHEANG NO. GE 2345 EXP. 9/30/09 GEOTECHNICAL STATE OF CALIFORNIA

NO AS-BUILT CHANGES

AS BUILT
CORRECTIONS BY AH. ALAHMAD
CONTRACT NO. 12-0125 U4
DATE 04-25-00

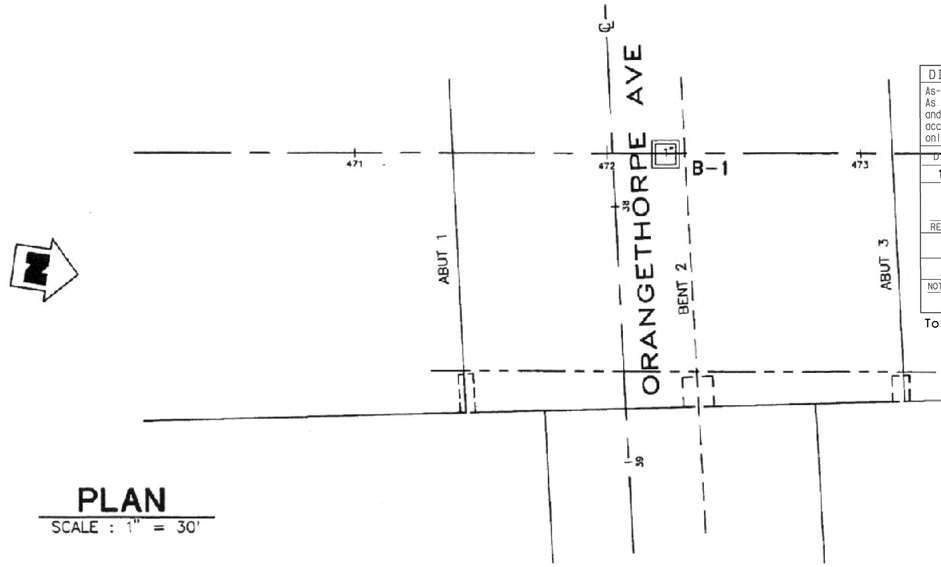

PLAN
SCALE : 1" = 30'

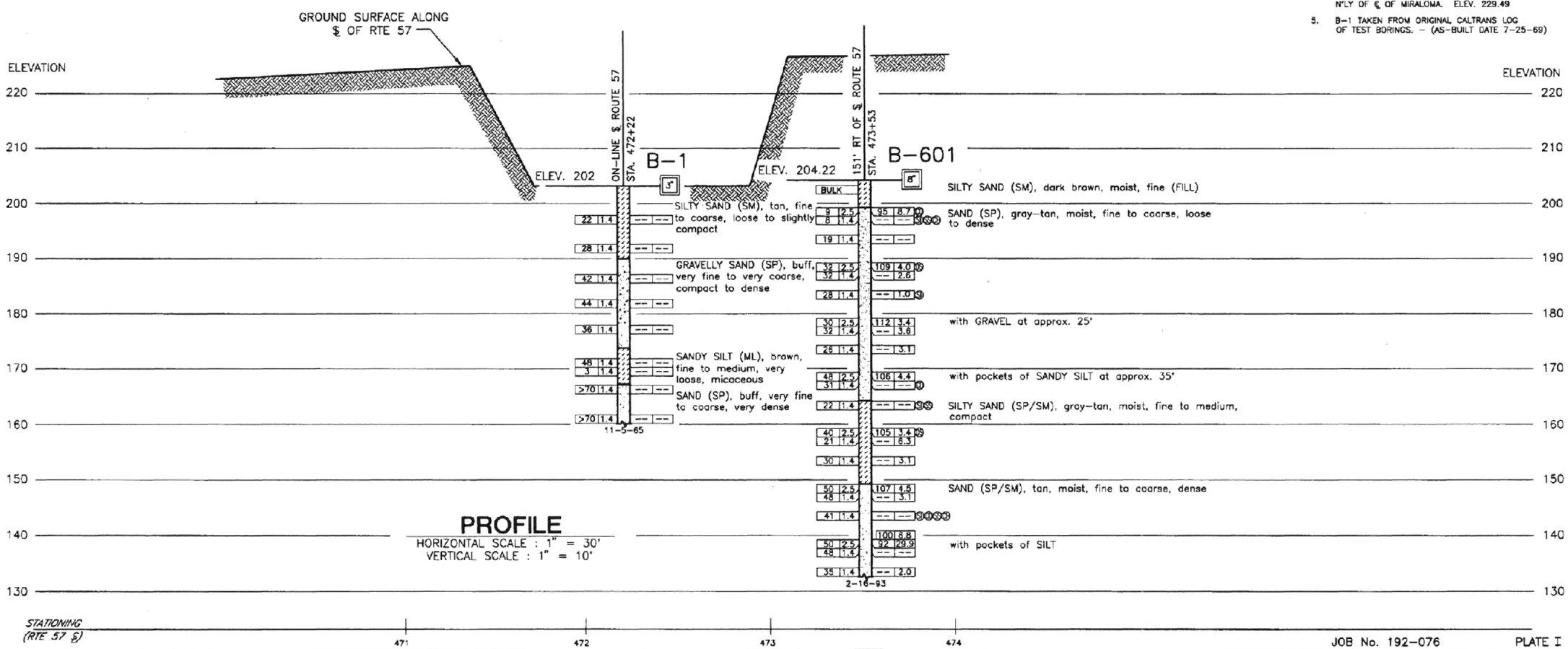

PROFILE
HORIZONTAL SCALE : 1" = 30'
VERTICAL SCALE : 1" = 10'

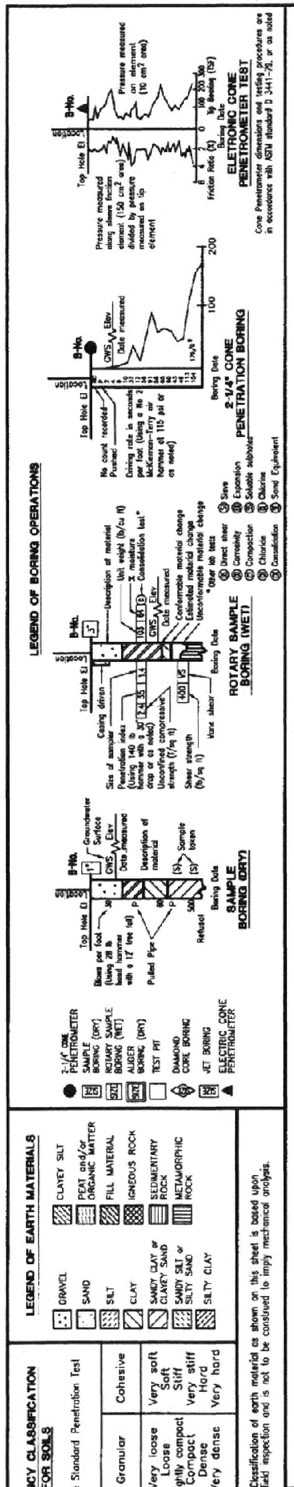

BE NGUYEN — DESIGN OVERSIGHT — SIGN OFF DATE 3-13-96	DRAWN BY JOE MAGLIATO	E.A. RIUTORT — FIELD INVESTIGATOR	M&T AGRA — Geotechnical and Environmental Services	PREPARED FOR THE STATE OF CALIFORNIA DEPARTMENT OF TRANSPORTATION	Y. NIEN WANG — PROJECT ENGINEER
	CHECK BY E.A. RIUTORT	DATE 2-16-93			

BRIDGE NO. 55-0459 — POST MILE 16.4

ORANGETHORPE AVE UC (WIDEN)
LOG OF TEST BORINGS

JOB No. 192-076 — PLATE I

ORIGINAL SCALE IN INCHES FOR REDUCED PLANS 0 1 2 3

CU 12209 EA 012501

DISREGARD PRINTS BEARING EARLIER REVISION DATES → REVISION DATES (PRELIMINARY STAGE ONLY) 8-24-94 3/24/95

SHEET 14 OF 15

FILENAME => 55-0459-z-1tb04.tif

FED. ROAD DIST. NO.	STATE	F. A. PROJECT NO	SHEET NO.	TOTAL SHEETS
7	CALIF.			

DIST.	COUNTY	ROUTE	POST MILES	SHEET NO.	TOTAL SHEETS
07	Ora.	57	28.1/28.7	247	247

October 17, 1966

BENCH MARK

BM #472 A-65 Elev. 203.91
Set R/S in S. curb Orangethorpe Ave. 134
E. of ℄ Orange Fwy. 100' W of ℄ Nebraska Ave.

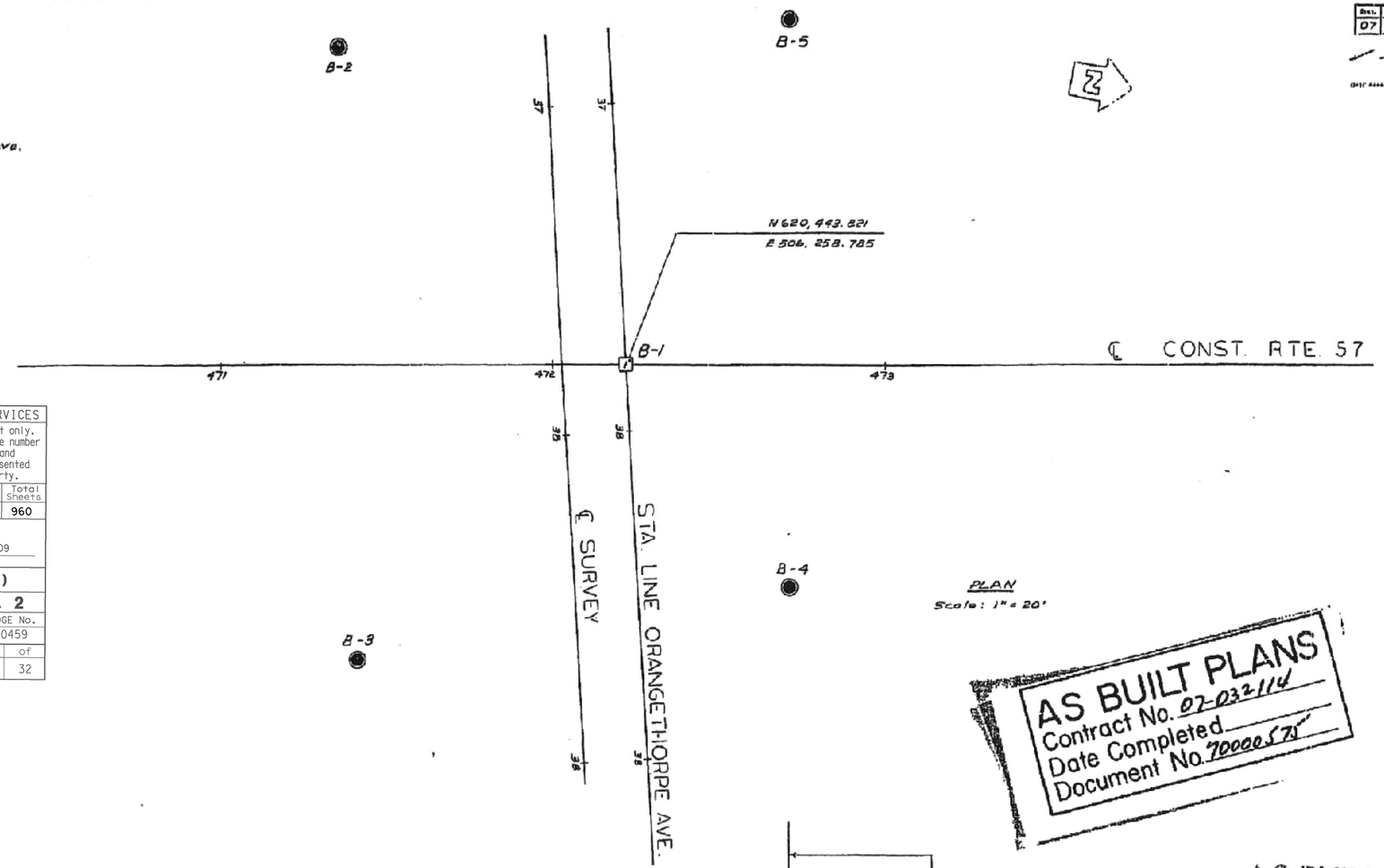

AS BUILT PLANS
Contract No. 07-032114
Date Completed
Document No. 70000571

AS BUILT
CORRECTIONS BY
CONTRACT NO.
DATE 7-25-69 5-2-69

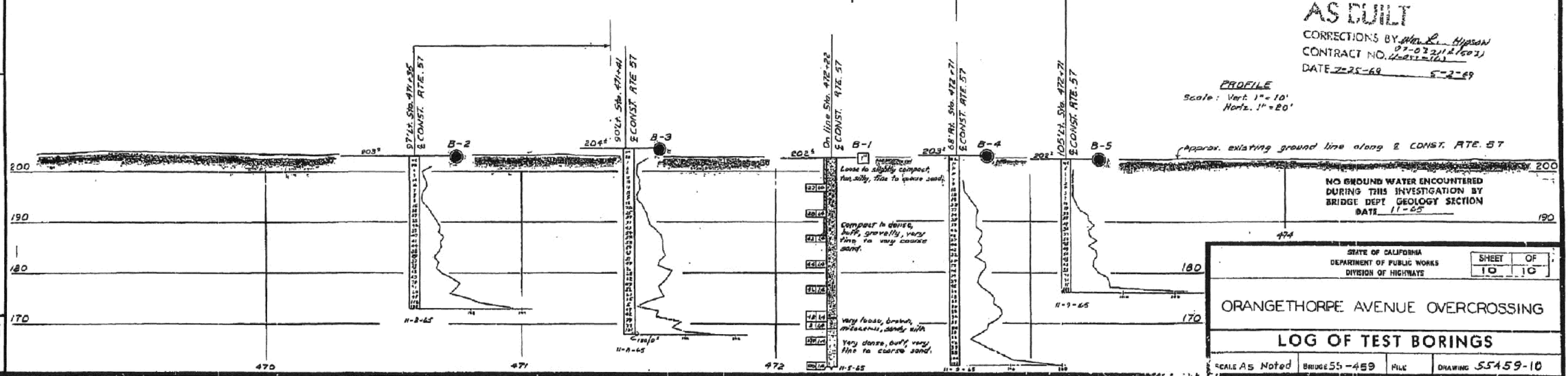

NO GROUND WATER ENCOUNTERED DURING THIS INVESTIGATION BY BRIDGE DEPT GEOLOGY SECTION
DATE 11-65

LEGEND OF BORING OPERATIONS

Penetrometer; 2½" Core Penetrometer; Sampler Borings (Dry); Rotary Borings (Wet); Auger Borings (Dry); Jet Borings; Core Boring; Test Pit

Penetration Borings; Rotary Boring; 1" Soil Tube

LEGEND OF EARTH MATERIALS

Gravel; Sand; Silt; Clay; Sandy Clay or Clayey Sand; Sandy Silt or Silty Sand; Silty Clay or Clayey Silt; Peat or Organic Matter; Fill Material; Igneous Rock; Sedimentary Rock; Metamorphic Rock

CLASSIFICATION OF MATERIAL BASED ON STANDARD GRADE SIZE LIMITS

NOTE: Classification of earth material as shown on this sheet is based upon field inspection and is not to be construed to imply mechanical analysis.

FIELD STUDY	Y.K. Chin	12-7-65
DRAWN	Y.K. Chin	12-7-65
CHECKED	R.T. Sheehan	12-15-65

Approved for recommendation: [signature]

BRIDGE DEPARTMENT
ENGINEERING GEOLOGY SECTION

DIVISION OF ENGINEERING SERVICES - GEOTECHNICAL SERVICES

As-Built Log of Test Borings sheet is considered an informational document only. As such, the State of California registration seal with signature, license number and registration certificate expiration date confirm that this is a true and accurate copy of the original document. This drawing is available and presented only for the convenience of any bidder, contractor or other interested party.

DIST.	COUNTY	ROUTE	POST MILES - TOTAL PROJECT	Sheet No.	Total Sheets
12	Ora	57	16.2/18.6	877	960

Lino Cheang — REGISTERED CIVIL ENGINEER — 6/15/09 DATE

REGISTERED PROFESSIONAL ENGINEER — LINO C. CHEANG — NO. GE 2345 — EXP. 9/30/09 — GEOTECHNICAL — STATE OF CALIFORNIA

ORANGETHORPE AVENUE UC (WIDEN)

AS-BUILT LOG OF TEST BORINGS NO. 2

NOTE: A COPY OF THIS LOG OF TEST BORINGS IS AVAILABLE AT OFFICE OF STRUCTURE MAINTENANCE AND INVESTIGATIONS, SACRAMENTO, CALIFORNIA

CU: 12 EA: 0F0311 — BRIDGE No. 55-0459 — Sheet 32 of 32

To accompany plans dated 12-14-09

STATE OF CALIFORNIA
DEPARTMENT OF PUBLIC WORKS
DIVISION OF HIGHWAYS

SHEET 10 OF 10

ORANGETHORPE AVENUE OVERCROSSING

LOG OF TEST BORINGS

SCALE As Noted | BRIDGE 55-459 | FILE | DRAWING 55459-10

PREL. DRAWING NO. PR-

Charge: 07208 Disregard prior bearing earlier numbers

247

FILENAME => 55-0459-z-ltb05.tif

DIST	COUNTY	ROUTE	POST MILES TOTAL PROJECT	SHEET No	TOTAL SHEETS
12	Ora	57	16.2/18.6	878	960

REGISTERED CIVIL ENGINEER 6-17-09 DATE

12-14-09
PLANS APPROVAL DATE

REGISTERED PROFESSIONAL ENGINEER T.A. Kirilov No. C67708 Exp. 6/30/11 CIVIL STATE OF CALIFORNIA

The State of California or its officers or agents shall not be responsible for the accuracy or completeness of electronic copies of this plan sheet.

OCTA
550 S MAIN STREET
ORANGE, CA 92868

RBF CONSULTING
14725 ALTON PKWY
IRVINE, CA 92618

NOTES:

1. For General Notes and Index to Plans, see "Index to Plans & General Notes" sheet.
2. For Pile Data Table, see "Foundation Plan" sheet.
3. PC/PS Conc Bathtub Girder segment.

RETROFIT LEGEND:

(C) Column Casing (Class P/F)

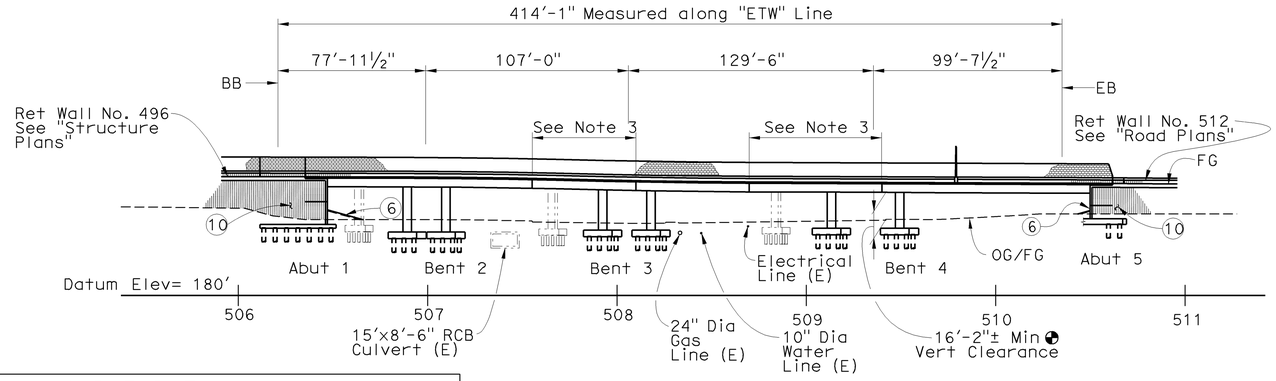

ELEVATION

1" = 40'

CURVE DATA				
No.	R	Δ	T	L
1	3,500.00'	15°37'04"	479.99'	954.04'
2	3,417.00'	04°34'54"	136.70'	273.24'
3	1,811.50'	08°22'58"	132.76'	265.04'
4	3,393.00'	04°22'35"	129.64'	259.15'

LEGEND:

1. Paint "Bridge No 55-0460" and year constructed
2. Paint "Placentia Ave UC"
3. Closure Pour
4. Concrete Barrier Type 736 (Mod)
5. Temporary Railing (Type K), see "Road Plans"
6. Slope Paving, Full Slope
7. Structure Approach Type N(30D)
8. Exist Fiber Optic to be relocated
9. Soundwall Masonry Block
10. Fractured Rib Texture
11. Electrolier

Indicates New Construction
Indicates Existing Structure
Bridge Removal (Portion)
Closure Pour
Point of Min Vert Clearance
Electrolier

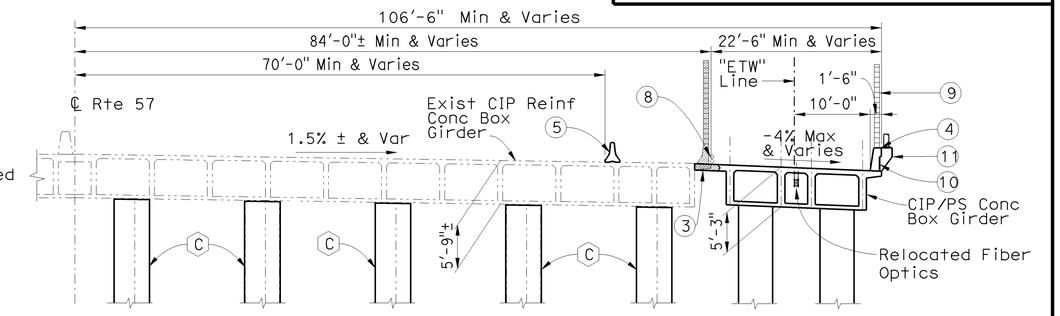

TYPICAL SECTION @ SPANS 1 & 4

1" = 10'

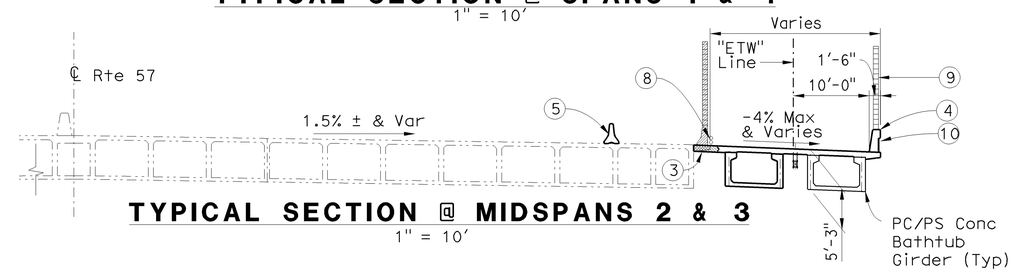

TYPICAL SECTION @ MIDSPANS 2 & 3

1" = 10'

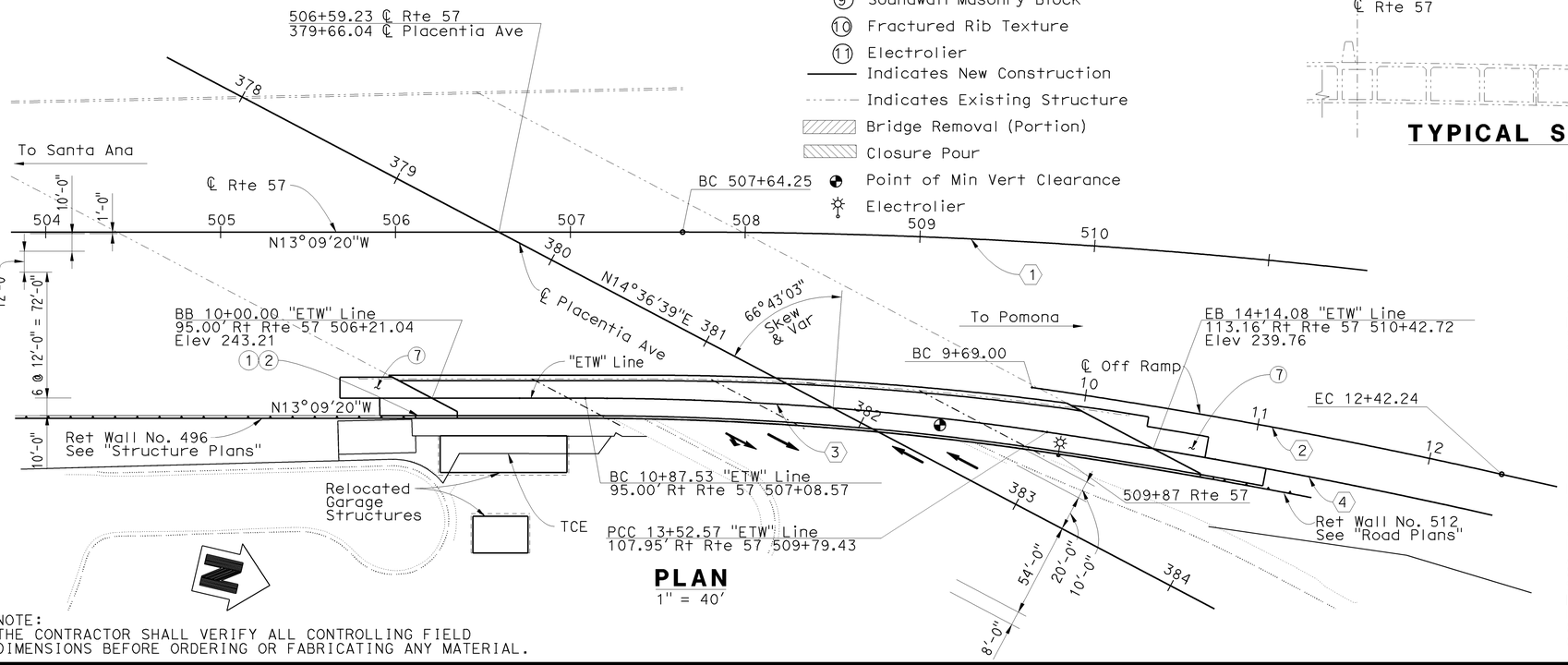

PLAN

1" = 40'

NOTE:
THE CONTRACTOR SHALL VERIFY ALL CONTROLLING FIELD DIMENSIONS BEFORE ORDERING OR FABRICATING ANY MATERIAL.

PLACENTIA AVENUE UC QUANTITIES	BRIDGE NO 55-0460	
BRIDGE REMOVAL (PORTION), LOCATION E	LUMP	SUM
STRUCTURE EXCAVATION (BRIDGE)	1,163	CY
STRUCTURE EXCAVATION (TYPE Y-1) (AERIALLY DEPOSITED LEAD)	39	CY
STRUCTURE BACKFILL (BRIDGE)	933	CY
24" CAST-IN-DRILLED-HOLE CONCRETE PILING	2,113	LF
30" CAST-IN-DRILLED-HOLE CONCRETE PILING	1,467	LF
PRESTRESSING CAST-IN-PLACE CONCRETE	LUMP	SUM
STRUCTURAL CONCRETE, BRIDGE FOOTING	387	CY
STRUCTURAL CONCRETE, BRIDGE	1,105	CY
STRUCTURAL CONCRETE, APPROACH SLAB (TYPE N)	81	CY
FRACTURED RIB TEXTURE	890	SQFT
DRILL AND BOND DOWEL	240	LF
FURNISH PRECAST PRESTRESSED CONCRETE BATHTUB GIRDER (70'-80')	2	EA
FURNISH PRECAST PRESTRESSED CONCRETE BATHTUB GIRDER (80'-90')	1	EA
FURNISH PRECAST PRESTRESSED CONCRETE BATHTUB GIRDER (90'-100')	1	EA
ERECT PRECAST PRESTRESSED CONCRETE BATHTUB GIRDER	4	EA
SOUND WALL (MASONRY BLOCK)	3,271	SQFT
JOINT SEAL (MR 2")	137	LF
BAR REINFORCING STEEL (BRIDGE)	551,183	LB
ASPHALT MEMBRANE WATERPROOFING	1,190	SQFT
COLUMN CASING	87,582	LB
SLOPE PAVING (CONCRETE)	24	CY
MISCELLANEOUS METAL (BRIDGE)	675	LB
BRIDGE DECK DRAINAGE SYSTEM	1,150	LB
CONCRETE BARRIER (TYPE 736A MODIFIED)	32	LF
CONCRETE BARRIER (TYPE 736 MODIFIED)	427	LF

Jon Hamaguchi
DESIGN OVERSIGHT Jon Hamaguchi
6-24-09
SIGN OFF DATE

	BY	CHECKED
DESIGN	T. A. Kirilov	F. Sanchez
DETAILS	J. Saldana	H. Montoya
QUANTITIES	CC/CS/SM	VT/KC

LRFD DESIGN	LIVE LOADING: HL93 AND PERMIT DESIGN LOAD		
LAYOUT	BY T. A. Kirilov	CHECKED Romeo M. Firme	
SPECIFICATIONS	BY S. Sheikh	PLANS AND SPECS COMPARED S. Sheikh	

PREPARED FOR THE STATE OF CALIFORNIA DEPARTMENT OF TRANSPORTATION

Romeo M. Firme
PROJECT ENGINEER

BRIDGE NO. 55-0460
POST MILE 17.1

PLACENTIA AVENUE UC (WIDEN)
GENERAL PLAN

DESIGN GENERAL PLAN SHEET (ENGLISH) (REV. 2/25/05)

ORIGINAL SCALE IN INCHES FOR REDUCED PLANS 0 1 2 3

CU 12
EA 0F0311

DISREGARD PRINTS BEARING EARLIER REVISION DATES

REVISION DATES (PRELIMINARY STAGE ONLY) 8/12/08 10/24/08 2/13/09 4/6/09 6/17/09

SHEET 1 OF 42

FILE => 55-0460-a-gp01.dgn

USERNAME => trlenard DATE PLOTTED => 16-DEC-2009 TIME PLOTTED => 13:44

DIST	COUNTY	ROUTE	POST MILES TOTAL PROJECT	SHEET No	TOTAL SHEETS
12	Ora	57	16.2/18.6	879	960

REGISTERED CIVIL ENGINEER 6-17-09 DATE

12-14-09
PLANS APPROVAL DATE

REGISTERED PROFESSIONAL ENGINEER T. A. Kirilov No. C67708 Exp. 6/30/11 CIVIL STATE OF CALIFORNIA

The State of California or its officers or agents shall not be responsible for the accuracy or completeness of electronic copies of this plan sheet.

OCTA
550 S MAIN STREET
ORANGE, CA 92868

RBF CONSULTING
14725 ALTON PKWY
IRVINE, CA 92618

GENERAL NOTES
LOAD AND RESISTANCE FACTOR DESIGN

DESIGN:
AASHTO LRFD Bridge Design Specifications, 3rd edition with interims through 2006 and the Caltrans Amendments 3.06.01; except that abutments, earth retaining systems, bridge (including barrier and railing) details taken from Standard Plans May 2006 and earlier versions, and Standard Bridge Details XS sheets, are designed using Bridge Design Specifications (`96 AASHTO w/Revisions by Caltrans).

SEISMIC DESIGN:
Caltrans Seismic Design Criteria (SDC), Version 1.4 dated June 2006.

DEAD LOAD:
Includes 35 psf for future wearing surface.

LIVE LOADING:
HL93 and permit design load.

SEISMIC LOADING:
Soil profile type D
Magnitude group 6.5 ± 0.25 (PBA = 0.7g) Scaled from 0.6g
Magnitude group 7.5 ± 0.25 (PBA = 0.6g)
Enveloped & Modified for near fault effects
as per SDC Section 6.1.2.1

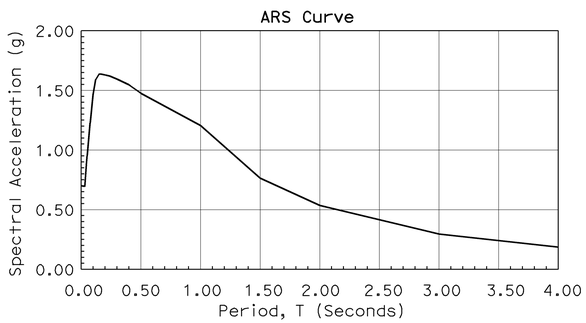

REINFORCED CONCRETE:
f_y = 60,000 psi
f'_c = 3,600 psi
n = 8
Transverse Deck Slabs (Working Stress Design)
f_s = 20,000 psi
f_c = 1,200 psi
n = 10

PRESTRESSED CONCRETE: See "Prestressing Notes"

NOTE:
THE CONTRACTOR SHALL VERIFY ALL CONTROLLING FIELD DIMENSIONS BEFORE ORDERING OR FABRICATING ANY MATERIAL.

INDEX TO PLANS

SHEET NO.	TITLE
1	General Plan
2	Index to Plans & General Notes
3	Construction Sequence
4	Bridge Removal Details
5	Deck Elevations
6	Foundation Plan
7	Abutment 1 Layout
8	Abutment 5 Layout
9	Abutment Pile Layout
10	Cast-in-Drilled-Hole Piling Details
11	Abutment Details No. 1
12	Abutment Details No. 2
13	Abutment Details No. 3
14	Abutment Details No. 4
15	Abutment Details No. 5
16	Bent Layout
17	Bent Details No. 1
18	Bent Details No. 2
19	CIP/PS Typical Section No. 1
20	CIP/PS Typical Section No. 2
21	PC/PS Typical Section
22	Girder Layout No. 1
23	Girder Layout No. 2
24	Camber Diagram
25	Additional Girder Reinforcement
26	PC/PS Girder Details No. 1
27	PC/PS Girder Details No. 2
28	PC/PS Girder Details No. 3
29	Steel Column Casings
30	Concrete Barrier Type 736 (Mod)
31	Soundwall-Masonry Block on Bridge
32	Soundwall-Masonry Block with Barrier on Retaining Wall-Details No. 1
33	Soundwall-Masonry Block with Barrier on Retaining Wall-Details No. 2
34	Miscellaneous Details
35	Structure Approach Type N (30D)
36	Structure Approach Drainage Details
37	Slope Paving - Full Slope
38	Log of Test Borings No. 1
39	Log of Test Borings No. 2
40	Log of Test Borings No. 3
41	Log of Test Borings No. 4
42	As-Built Log of Test Borings

LEGEND FOR CONCRETE STRENGTH & TYPE LIMITS

- Structural Concrete, Bridge ($f'c$ = 3.6 ksi @ 28 days)
- Structural Concrete , Bridge ($f'c$ = 5.0 ksi @ 28 days)
- PC/PS Concrete Bathtub Girder ($f'c$ = 5.0 ksi @ 28 days)
- Structural Concrete, Bridge Footing ($f'c$ = 3.6 ksi @ 28 days)
- Cast-in-Drilled-Hole Concrete Pile ($f'c$ = 3.6 ksi @ 28 days)

STANDARD PLANS DATED MAY 2006

	A10A	Acronyms and Abbreviations (Sheet 1 of 2)
	A10B	Acronyms and Abbreviations (Sheet 2 of 2)
	A10C	Symbols (Sheet 1 of 2)
	A10D	Symbols (Sheet 2 of 2)
	A62C	Limits of Payment for Excavation and Backfill Bridge
	B0-1	Bridge Details
	B0-3	Bridge Details
	B0-5	Bridge Details
	B0-13	Bridge Details
	B3-9	Retaining Wall Details No. 2
RSP	B6-21	Joint Seals (Maximum Movement Rating = 2")
	B7-1	Box Girder Details
	B7-6	Deck Drain Type D-1 and D-2
	B7-8	Deck Drainage Details
	B7-10	Utility Opening-Box Girder
	B8-5	Cast-in-Place Prestressed Girder Details
	B11-56	Concrete Barrier Type 736
	B14-5	Water Supply Line (Details) (Pipe sizes less than 4")

PLAN SYMBOLS

Standard Plan Sheet No.
Detail No.
Section Identification

LEGEND FOR LIMITS OF EXPANSIVE SOIL

- Low Expansion Material EI < 50 and SE>20
- Structure Excavation (Bridge)
- Structure Backfill (Bridge)
- Roadway Excavation, see "Road Plans"
- Roadway Embankment, see "Road Plans"
- Structure Excavation (Type Y-1) (Aerially Deposited Lead)
  Abut 1, C=0.5'
  Abut 5, C=0.5'

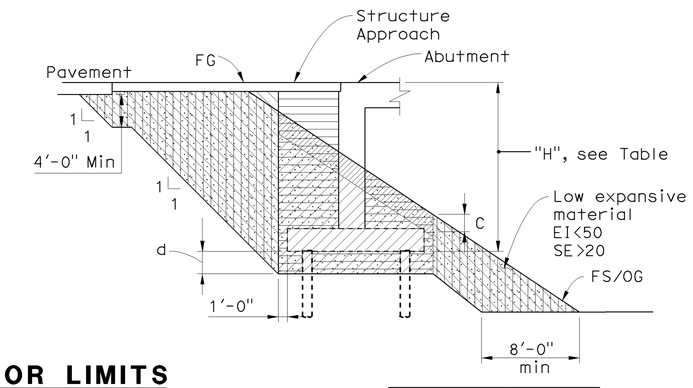

H	d
< 16'-0"	4'-0"
> 16'-0"	0

Note:
1. Transverse limit of Low Expansive Material shall be 12" from edges of abutment footing to end of existing abutment stem.
2. This special detail supercedes "Section A-A" on Sheet No. A62C, page 18 of the Standard Plans dated May 2006.

LIMITS OF EXPANSIVE SOIL EXCLUSION ZONE IN BRIDGE EMBANKMENT
No Scale

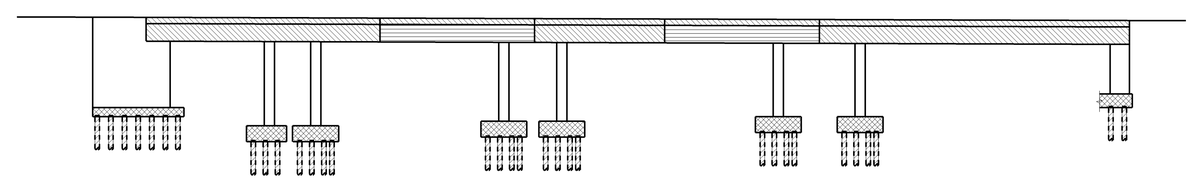

CONCRETE STRENGTH AND TYPE LIMITS
No Scale

DESIGN OVERSIGHT Jon Hanaguchi
6-24-09
SIGN OFF DATE

	BY	CHECKED
DESIGN	T. A. Kirilov	F. Sanchez
DETAILS	J. Saldana	H. Montoya
QUANTITIES	CC/CS/SM	VT/KC

PREPARED FOR THE STATE OF CALIFORNIA DEPARTMENT OF TRANSPORTATION

Romeo M. Firme
PROJECT ENGINEER

BRIDGE NO. 55-0460
POST MILE 17.1

PLACENTIA AVENUE UC (WIDEN)
INDEX TO PLANS & GENERAL NOTES

DESIGN DETAIL SHEET (ENGLISH) (REV. 2/25/05)

ORIGINAL SCALE IN INCHES FOR REDUCED PLANS 0 1 2 3

CU 12
EA 0F0311

DISREGARD PRINTS BEARING EARLIER REVISION DATES
REVISION DATES (PRELIMINARY STAGE ONLY) 2/13/09 4/06/09 6/17/09

SHEET 2 OF 42

FILE => 55-0460-a-itp01.dgn

USERNAME => trlehord DATE PLOTTED => 16-DEC-2009 TIME PLOTTED => 13:44

DIST	COUNTY	ROUTE	POST MILES TOTAL PROJECT	SHEET No	TOTAL SHEETS
12	Ora	57	16.2/18.6	880	960

REGISTERED CIVIL ENGINEER — DATE 6-17-09

12-14-09
PLANS APPROVAL DATE

REGISTERED PROFESSIONAL ENGINEER — T.A. Kirilov — No. C67708 — Exp. 6/30/11 — CIVIL — STATE OF CALIFORNIA

The State of California or its officers or agents shall not be responsible for the accuracy or completeness of electronic copies of this plan sheet.

OCTA
550 S MAIN STREET
ORANGE, CA 92868

RBF CONSULTING
14725 ALTON PKWY
IRVINE, CA 92618

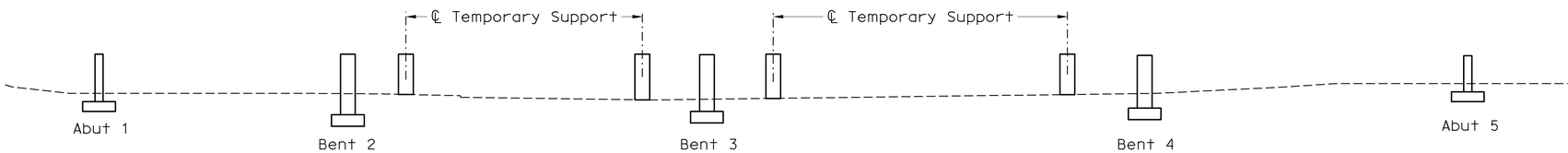

FIGURE 1

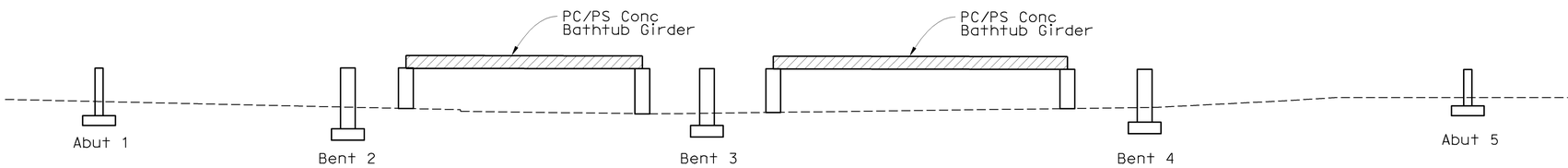

FIGURE 2

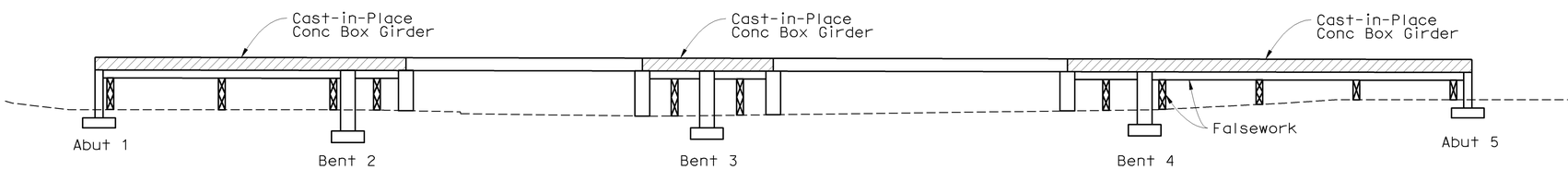

FIGURE 3

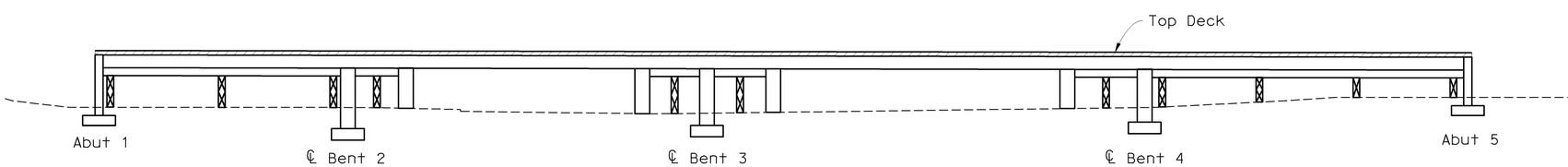

FIGURE 4

LEGEND:

Indicates portion of bridge to be constructed

SUPERSTRUCTURE CONSTRUCTION SEQUENCE:

1. Construct column and abutments and build precast girders.
2. Erect temporary supports. (Figure 1)
3. Erect precast girders. (Figure 2)
4. Erect falsework. Construct Cast-in-Place soffit slabs and girder stems. (Figure 3)
5. Construct top deck on entire structure. (Figure 4)
6. Stress continuity post-tensioning.
7. Remove falsework and temporary supports.
8. Construct concrete barrier rail and sound wall.
9. Construct abutment and deck closure pours.

NOTE:
THE CONTRACTOR SHALL VERIFY ALL CONTROLLING FIELD DIMENSIONS BEFORE ORDERING OR FABRICATING ANY MATERIAL.

DESIGN OVERSIGHT — Jon Hamaguchi
6-24-09
SIGN OFF DATE

	BY	CHECKED
DESIGN	T. A. Kirilov	F. Sanchez
DETAILS	J. Saldana	H. Montoya
QUANTITIES	CC/CS/SM	VT/KC

PREPARED FOR THE STATE OF CALIFORNIA DEPARTMENT OF TRANSPORTATION

Romeo M. Firme
PROJECT ENGINEER

BRIDGE NO. 55-0460
POST MILE 17.1

PLACENTIA AVENUE UC (WIDEN)
CONSTRUCTION SEQUENCE

DESIGN DETAIL SHEET (ENGLISH) (REV. 2/25/05)

ORIGINAL SCALE IN INCHES FOR REDUCED PLANS 0 1 2 3

CU 12
EA 0F0311

DISREGARD PRINTS BEARING EARLIER REVISION DATES

REVISION DATES (PRELIMINARY STAGE ONLY): 2/13/09 4/06/09 6/17/09

SHEET 3 OF 42

FILE => 55-0460-c-aseqconst.dgn

USERNAME => trienord DATE PLOTTED => 16-DEC-2009 TIME PLOTTED => 13:44

DIST	COUNTY	ROUTE	POST MILES TOTAL PROJECT	SHEET No	TOTAL SHEETS
12	Ora	57	16.2/18.6	881	960

REGISTERED CIVIL ENGINEER 6-17-09 DATE

12-14-09
PLANS APPROVAL DATE

REGISTERED PROFESSIONAL ENGINEER T. A. Kirilov No. C67708 Exp. 6/30/11 CIVIL STATE OF CALIFORNIA

The State of California or its officers or agents shall not be responsible for the accuracy or completeness of electronic copies of this plan sheet.

OCTA
550 S MAIN STREET
ORANGE, CA 92868

RBF CONSULTING
14725 ALTON PKWY
IRVINE, CA 92618

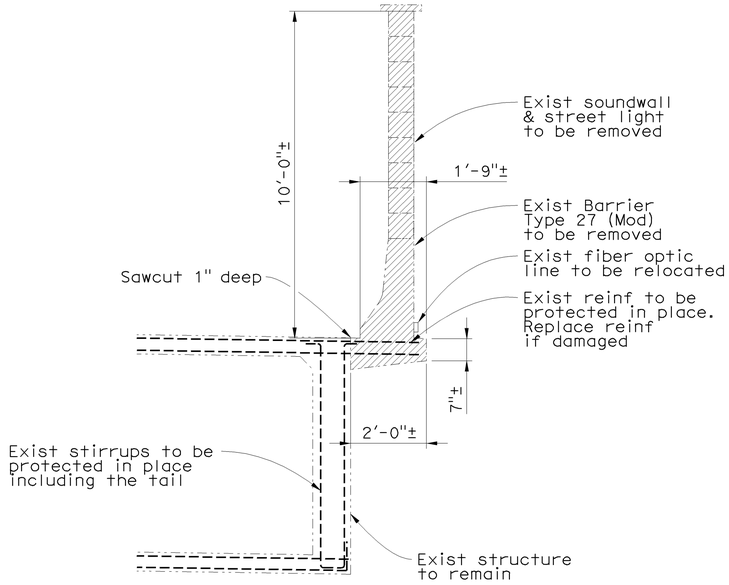

OVERHANG REMOVAL DETAILS

No Scale

NOTES:

1. The limit of overhang removal is from BB to EB.
2. The limit of barrier and soundwall removal is between ends of WW.

LEGEND:

Limits of Bridge Removal (portion)

Existing Structure

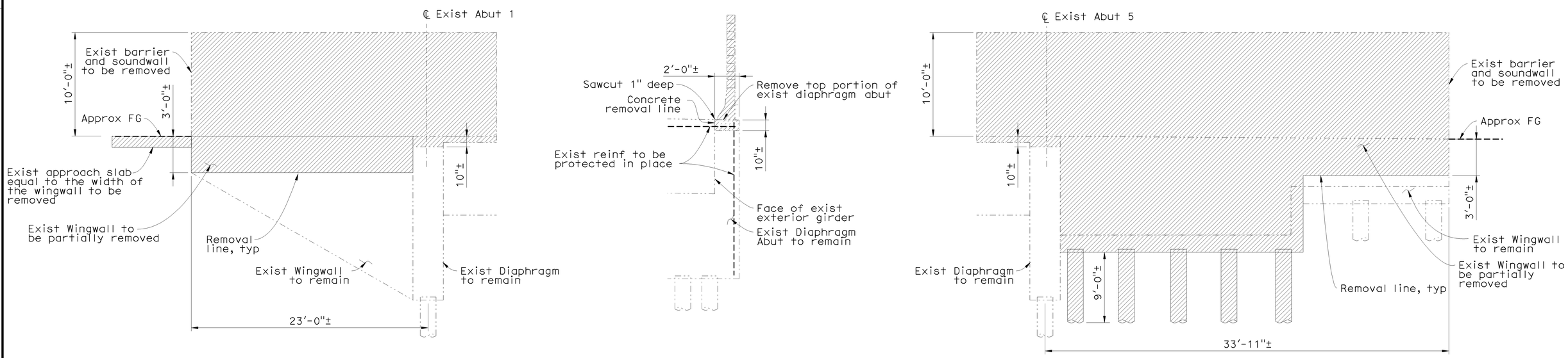

ABUTMENT AND WINGWALL REMOVAL DETAILS

No Scale

NOTE:
THE CONTRACTOR SHALL VERIFY ALL CONTROLLING FIELD DIMENSIONS BEFORE ORDERING OR FABRICATING ANY MATERIAL.

DESIGN OVERSIGHT Jon Hamaguchi
6-24-09
SIGN OFF DATE

	BY	CHECKED
DESIGN	T. A. Kirilov	F. Sanchez
DETAILS	J. Saldana	H. Montoya
QUANTITIES	CC/CS/SM	VT/KC

PREPARED FOR THE STATE OF CALIFORNIA DEPARTMENT OF TRANSPORTATION

Romeo M. Firme
PROJECT ENGINEER

BRIDGE NO. 55-0460
POST MILE 17.1

PLACENTIA AVENUE UC (WIDEN)
BRIDGE REMOVAL DETAILS

DESIGN DETAIL SHEET (ENGLISH) (REV. 2/25/05)

ORIGINAL SCALE IN INCHES FOR REDUCED PLANS 0 1 2 3

CU 12
EA 0F0311

DISREGARD PRINTS BEARING EARLIER REVISION DATES

REVISION DATES (PRELIMINARY STAGE ONLY) 2/13/09 4/6/09 6/17/09

SHEET 4 OF 42

FILE => 55-0460-c-brd.dgn

USERNAME => trlehard DATE PLOTTED => 17-DEC-2009 TIME PLOTTED => 05:40

DIST	COUNTY	ROUTE	POST MILES TOTAL PROJECT	SHEET No	TOTAL SHEETS
12	Ora	57	16.2/18.6	882	960

REGISTERED CIVIL ENGINEER — DATE 6-17-09

12-14-09
PLANS APPROVAL DATE

REGISTERED PROFESSIONAL ENGINEER — T.A. Kirilov — No. C67708 — Exp. 6/30/11 — CIVIL — STATE OF CALIFORNIA

The State of California or its officers or agents shall not be responsible for the accuracy or completeness of electronic copies of this plan sheet.

OCTA
550 S MAIN STREET
ORANGE, CA 92868

RBF CONSULTING
14725 ALTON PKWY
IRVINE, CA 92618

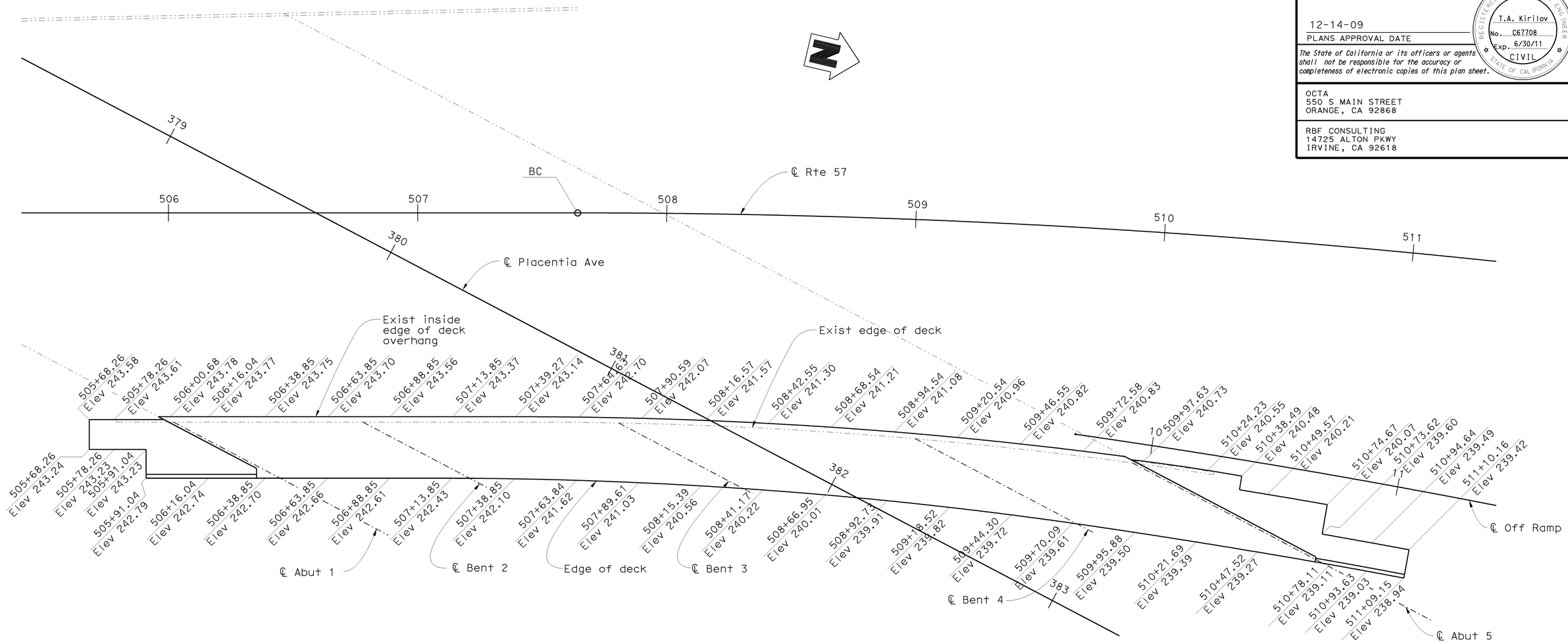

PLAN

1" = 20'

NOTES:

1. Elevations do not include camber.

LEGEND:

- - - - - Indicates Existing Structure

——— Indicates New Construction

NOTE:
THE CONTRACTOR SHALL VERIFY ALL CONTROLLING FIELD DIMENSIONS BEFORE ORDERING OR FABRICATING ANY MATERIAL.

DESIGN OVERSIGHT — Jon Hamaguchi
6-24-09
SIGN OFF DATE

	BY	CHECKED
DESIGN	T. A. Kirilov	F. Sanchez
DETAILS	J. Saldana	H. Montoya
QUANTITIES	CC/CS/SM	VT/KC

PREPARED FOR THE STATE OF CALIFORNIA DEPARTMENT OF TRANSPORTATION

Romeo M. Firme
PROJECT ENGINEER

BRIDGE NO. 55-0460
POST MILE 17.1

PLACENTIA AVENUE UC (WIDEN)
DECK ELEVATIONS

DESIGN DETAIL SHEET (ENGLISH) (REV. 2/25/05)

ORIGINAL SCALE IN INCHES FOR REDUCED PLANS 0 1 2 3

CU 12
EA 0F0311

DISREGARD PRINTS BEARING EARLIER REVISION DATES

REVISION DATES (PRELIMINARY STAGE ONLY): 2/13/09 4/6/09 6/17/09

SHEET 5 OF 42

FILE => 55-0460-d-dc01.dgn

USERNAME => trlenard DATE PLOTTED => 17-DEC-2009 TIME PLOTTED => 08:40

DIST	COUNTY	ROUTE	POST MILES TOTAL PROJECT	SHEET No	TOTAL SHEETS
12	Ora	57	16.2/18.6	883	960

REGISTERED CIVIL ENGINEER — DATE 6-17-09

12-14-09
PLANS APPROVAL DATE

REGISTERED PROFESSIONAL ENGINEER — T.A. Kirilov — No. C67708 — Exp. 6/30/11 — CIVIL — STATE OF CALIFORNIA

The State of California or its officers or agents shall not be responsible for the accuracy or completeness of electronic copies of this plan sheet.

OCTA
550 S MAIN STREET
ORANGE, CA 92868

RBF CONSULTING
14725 ALTON PKWY
IRVINE, CA 92618

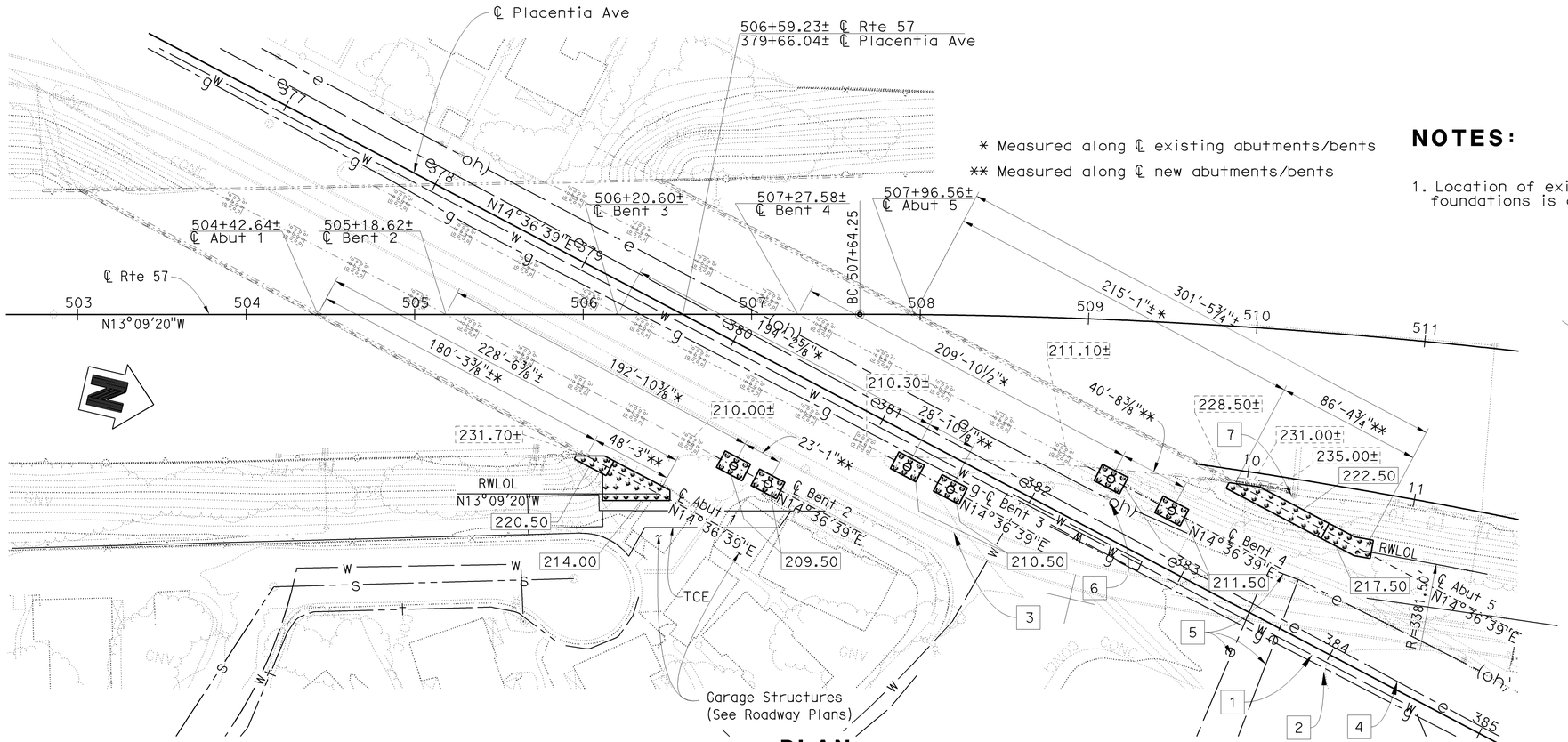

PLAN

1" = 40'

NOTES:

1. Location of exist structure foundations is approximate.

LEGEND:

- XXX.XX — Indicates Bottom of Footing Elevation
- XXX.XX± — Indicates Bottom of Existing Footing Elevation
- Indicates Existing Structure
- Indicates New Construction
- Indicates Existing Piling
- Indicates New Piling

UTILITY NOTES:

1. Exist 10" Dia Waterline (Golden State Water Co.)
2. Exist 24" Dia Gas Line (So Cal Gas)
3. Exist 15'x8.5' RCB Culvert
4. Exist Electrical Line (So Cal Edison)
5. Exist Overhead Electrical Lines (So Cal Edison)
6. Relocate Electric Pole
7. Relocate Traffic Sign

PILE DATA TABLE

Location	Pile Type	Nominal Resistance (kips)		Design Tip Elevation (ft)	Specified Tip Elevation (ft)	Nominal Driving Resistance (kips)
		Compression	Tension			
Abut 1	24" CIDH	540	0	170(a),198(c),179(d)	170	N/A
Bent 2	30" CIDH	420	60	170(a),194(b),170(c),175(d)	170	N/A
Bent 3	30" CIDH	470	60	160(a),187(b),171(c),176(d)	160	N/A
Bent 4	30" CIDH	500	60	159(a),188(b),171(c),177(d)	159	N/A
Abut 5	24" CIDH	400	0	180(a),205(c) 183(d)	180	N/A

Notes:

1) Design tip elevations for ABUTMENTS are controlled by: (a) Compression, (c) Settlement, (d) Lateral Load

2) Design tip elevations for BENTS are controlled by: (a) Compression (b) Tension (c) Settlement, (d) Lateral Load

3) The specified tip elevation shall not be raised above the design tip elevations for tension load, lateral load, and tolerable settlement.

BASIS OF COORDINATES:

Bearings and Coordinates as shown hereon are in terms of the California Coordinate System of 1983 (CCS83, Epoch 1991.35), Zone 6; based locally upon the following Control Stations as published by the County of Orange:

Name	Northing (ft.)-GRID	Easting (ft.)-GRID
2001 OCS 3282	2247998.84	6069149.29
2017 OCS 0560	2260355.81	6065880.43
2023 OCS 0111	2270990.23	6066809.18

All Coordinates and Distances are in terms of the U.S. Survey Foot, 1 meter = 39.37/12 feet

WARNING:
THE CONTRACTOR SHALL BE AWARE OF THE EXIST 66KV HIGH VOLTAGE OVERHEAD LINES AND THE 24" GAS LINE NEAR BENT 3. CONTRACTOR SHALL WORK WITH EXTREME CARE DURING CONSTRUCTION. SOUTHERN CALIFORNIA EDISON AND SOUTHERN CALIFORNIA GAS SHOULD BE NOTIFIED PRIOR TO START OF WORK. FOR VACUUM EXTRACTION NEAR 24" GAS LINE, SEE NOTE 4 ON "BENT DETAILS NO.1" SHEET.

BENCHMARKS:

Designation: 1L-54-82 Elev = 153.171
Described by OCS 2002 - Found 3 3/4" OCS Aluminum Benchmark Disk Stamped "1L-54-82", set in the Top of a 6 in. by 6 in. Concrete Post. Monument is located along the Westerly Levee of the Santa Ana River, 0.25 Miles Northerly along Levee from the Centerline of Orangewood Avenue, 200 ft. Northeasterly of the Easterly Leg of the Anaheim Angels 200 ft. tall sign, 69 ft. Westerly of the Centerline of the Bike Trail and 1.5 ft. Westerly of a Steel OCS Witness Post. Monument is set 0.3 below the Ground.

Designation: 2G-25-70 Elev = 275.872
Described by OCS 2003 - Found 3 3/4" OCS Aluminum Benchmark Disk Stamped "2G-25-70", set in the Southeasterly Corner of a 4 ft. by 6 ft. Concrete Catch Basin. Monument is Located in the Northwesterly Corner of the Intersection of Yorba Linda Boulevard and Deerpark Drive, 75 ft. Westerly of the Centerline of Deerpark and 46 ft. Northerly of the Centerline of Yorba Linda. Monument is set Level with the Sidewalk.

GEOTECHNICAL PROFESSIONAL — APPROVAL DATE 6-17-09

NOTE:
THE CONTRACTOR SHALL VERIFY ALL CONTROLLING FIELD DIMENSIONS BEFORE ORDERING OR FABRICATING ANY MATERIAL.

DESIGN OVERSIGHT — Jon Hamaguchi
6-24-09
SIGN OFF DATE

SCALE: 1" = 40'	VERT.DATUM NAVD 88	HORZ.DATUM CCS83	
PHOTOGRAMMETRY AS OF: 12-02-2007	ALIGNMENT TIES		
SURVEYED BY B. Madigan	DRAFTED BY B. Zeman		
FIELD CHECKED BY B. Cox	CHECKED BY T. Rai		

DESIGN	BY T. A. Kirilov	CHECKED F. Sanchez
DETAILS	BY J. Saldana	CHECKED H. Montoya
QUANTITIES	BY CC/CS/SM	CHECKED VT/KC

PREPARED FOR THE STATE OF CALIFORNIA DEPARTMENT OF TRANSPORTATION

Romeo M. Firme
PROJECT ENGINEER

BRIDGE NO. 55-0460
POST MILE 17.1

PLACENTIA AVENUE UC (WIDEN)
FOUNDATION PLAN

FOUNDATION PLAN SHEET (ENGLISH) (REV. 2-25-05)

ORIGINAL SCALE IN INCHES FOR REDUCED PLANS 0 1 2 3

CU 12
EA 0F0311

DISREGARD PRINTS BEARING EARLIER REVISION DATES

REVISION DATES (PRELIMINARY STAGE ONLY): 8/12/08 10/24/08 2/13/09 3/16/09 6/17/09

SHEET 6 OF 42

FILE => 55-0460-e-fdn01.dgn

USERNAME => trlenard DATE PLOTTED => 17-DEC-2009 TIME PLOTTED => 05:40

DIST	COUNTY	ROUTE	POST MILES TOTAL PROJECT	SHEET No	TOTAL SHEETS
12	Ora	57	16.2/18.6	884	960

REGISTERED CIVIL ENGINEER 6-17-09 DATE

12-14-09
PLANS APPROVAL DATE

REGISTERED PROFESSIONAL ENGINEER T.A. Kirilov No. C67708 Exp. 6/30/11 CIVIL STATE OF CALIFORNIA

The State of California or its officers or agents shall not be responsible for the accuracy or completeness of electronic copies of this plan sheet.

OCTA
550 S MAIN STREET
ORANGE, CA 92868

RBF CONSULTING
14725 ALTON PKWY
IRVINE, CA 92618

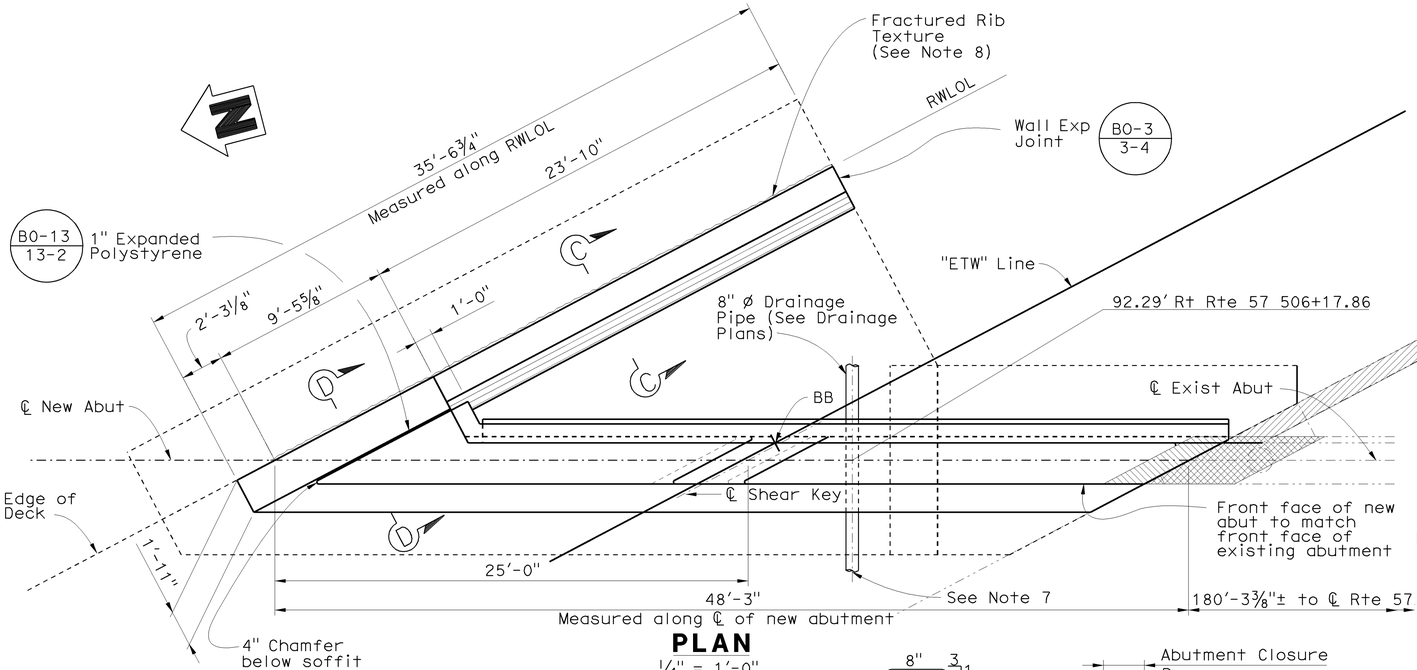

PLAN

1/4" = 1'-0"

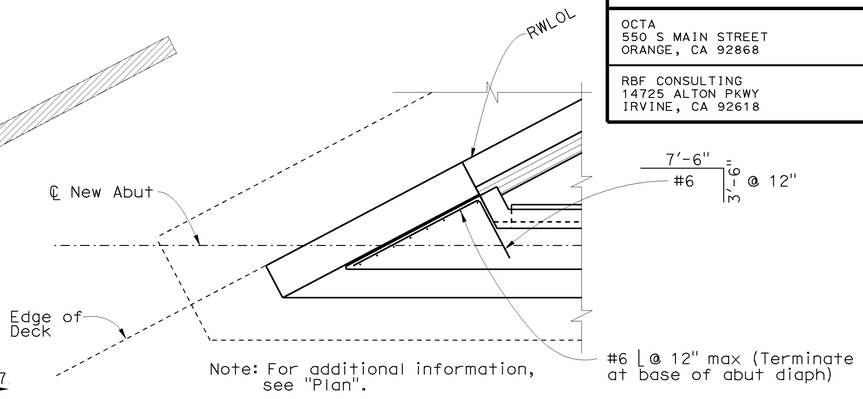

Note: For additional information, see "Plan".

ACUTE CORNER DETAIL

1/4" = 1'-0"

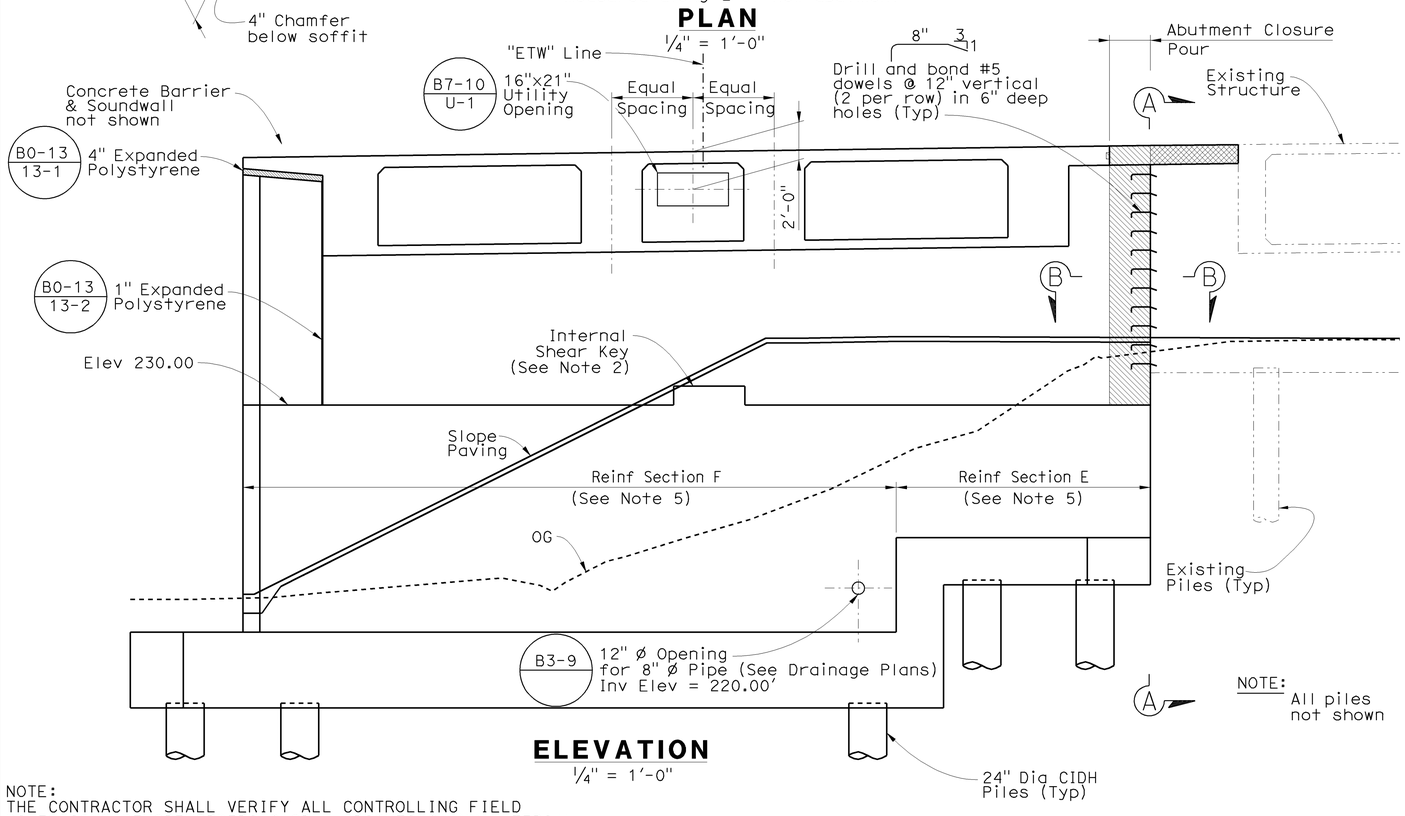

ELEVATION

1/4" = 1'-0"

LEGEND:

- Limits of Bridge Removal (portion)
- Closure Pour
- Indicates Existing Structure
- Indicates New Construction

NOTES:

1. For pile locations and footing dimensions, see "Abutment Pile Layout" sheet.
2. For shear key details, see "Abutment Details No. 2" sheet.
3. For Sections A-A and B-B, see "Abutment Details No. 2" sheet.
4. For limits of concrete removal see "Bridge Removal Details" sheet.
5. For Abutment Typical Section and Reinf Schedule, see "Abutment Details No. 1" sheet.
6. For Sections C-C and D-D, see "Abutment Details No. 4" sheet.
7. For drainage outlet details, see "Slope Paving-Full Slope" sheet.
8. For Fractured Rib Texture details, see "Concrete Barrier Type 736 (Mod)" sheet.

NOTE:
THE CONTRACTOR SHALL VERIFY ALL CONTROLLING FIELD DIMENSIONS BEFORE ORDERING OR FABRICATING ANY MATERIAL.

DESIGN OVERSIGHT Jon Hamaguchi
6-24-09
SIGN OFF DATE

	BY	CHECKED
DESIGN	T. A. Kirilov	F. Sanchez
DETAILS	J. Saldana	H. Montoya
QUANTITIES	CC/CS/SM	VT/KC

PREPARED FOR THE STATE OF CALIFORNIA DEPARTMENT OF TRANSPORTATION

Romeo M. Firme
PROJECT ENGINEER

BRIDGE NO. 55-0460
POST MILE 17.1

PLACENTIA AVENUE UC (WIDEN)
ABUTMENT 1 LAYOUT

DESIGN DETAIL SHEET (ENGLISH) (REV. 2/25/05)

ORIGINAL SCALE IN INCHES FOR REDUCED PLANS 0 1 2 3

CU 12
EA 0F0311

DISREGARD PRINTS BEARING EARLIER REVISION DATES

REVISION DATES (PRELIMINARY STAGE ONLY) 2/13/09 5/8/09 6/17/09

SHEET 7 OF 42

FILE => 55-0460-f-a01_lo1.dgn

USERNAME => trlenard DATE PLOTTED => 17-DEC-2009 TIME PLOTTED => 05:40

DIST	COUNTY	ROUTE	POST MILES TOTAL PROJECT	SHEET No	TOTAL SHEETS
12	Ora	57	16.2/18.6	885	960

REGISTERED CIVIL ENGINEER — DATE 6-17-09

12-14-09
PLANS APPROVAL DATE

The State of California or its officers or agents shall not be responsible for the accuracy or completeness of electronic copies of this plan sheet.

REGISTERED PROFESSIONAL ENGINEER — T.A. Kirilov — No. C67708 — Exp. 6/30/11 — CIVIL — STATE OF CALIFORNIA

OCTA
550 S MAIN STREET
ORANGE, CA 92868

RBF CONSULTING
14725 ALTON PKWY
IRVINE, CA 92618

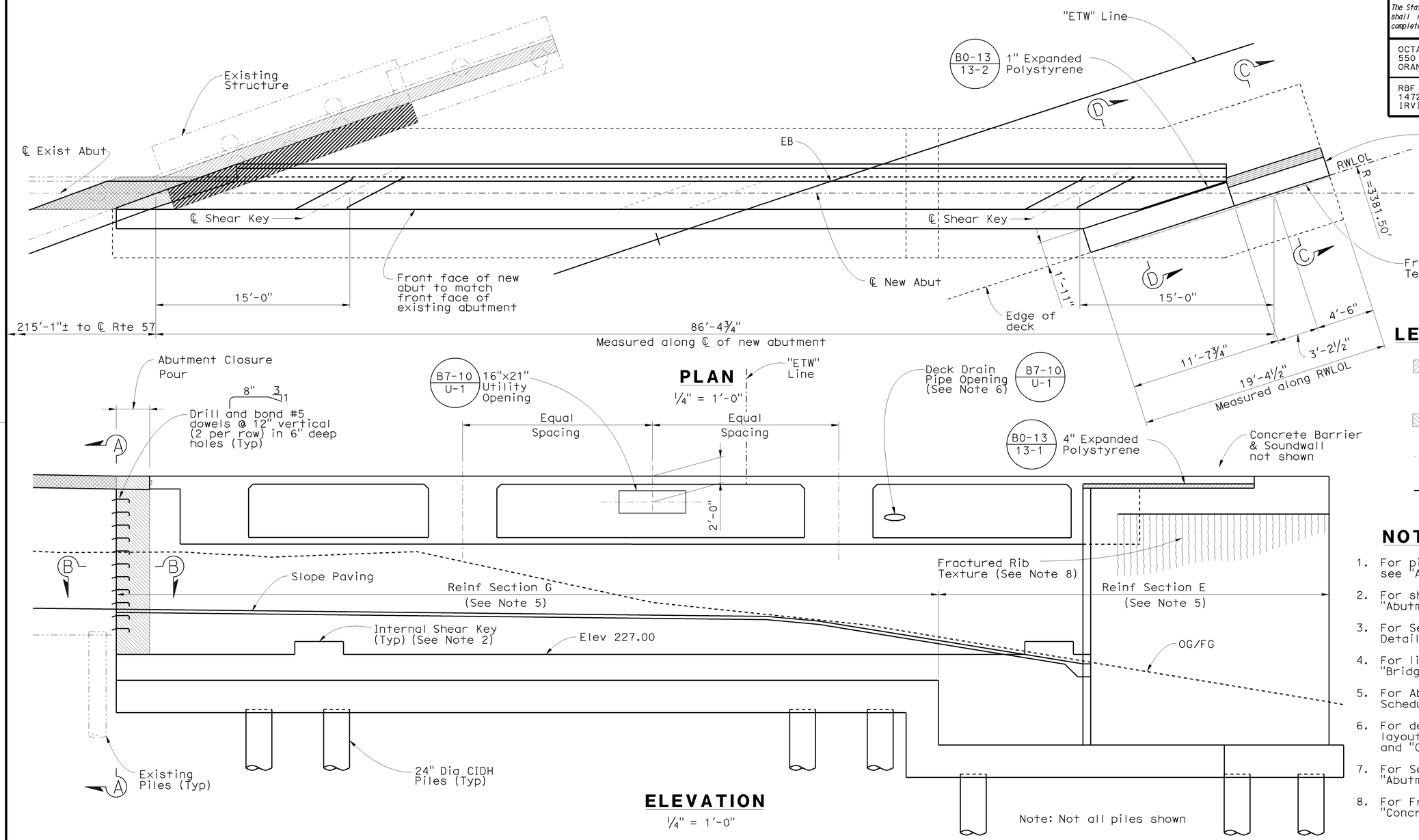

PLAN
¼" = 1'-0"

ELEVATION
¼" = 1'-0"

LEGEND:

- Limits of Bridge Removal (portion)
- Closure Pour
- Indicates Existing Structure
- Indicates New Construction

NOTES:

1. For pile locations and footing dimensions, see "Abutment Pile Layout" sheet.
2. For shear key details, see "Abutment Details No. 2" sheet.
3. For Sections A-A and B-B, see "Abutment Details No. 2" sheet.
4. For limits of concrete removal see "Bridge Removal Details" sheet.
5. For Abutment Typical Section and Reinf Schedule, see "Abutment Details No. 1" sheet.
6. For deck drain locations and piping layout, see "CIP/PS Typical Section No. 1" and "Girder Layout No. 2" sheets.
7. For Sections C-C & D-D, see "Abutment Details No. 5" sheet.
8. For Fractured Rib Texture details, see "Concrete Barrier Type 736 (Mod)" sheet.

NOTE:
THE CONTRACTOR SHALL VERIFY ALL CONTROLLING FIELD DIMENSIONS BEFORE ORDERING OR FABRICATING ANY MATERIAL.

DESIGN OVERSIGHT — Jon Hamaguchi
6-24-09
SIGN OFF DATE

	BY	CHECKED
DESIGN	T. A. Kirilov	F. Sanchez
DETAILS	J. Saldana	H. Montoya
QUANTITIES	CC/CS/SM	VT/KC

PREPARED FOR THE STATE OF CALIFORNIA DEPARTMENT OF TRANSPORTATION

Romeo M. Firme
PROJECT ENGINEER

BRIDGE NO. 55-0460
POST MILE 17.1

PLACENTIA AVENUE UC (WIDEN)
ABUTMENT 5 LAYOUT

DESIGN DETAIL SHEET (ENGLISH) (REV. 2/25/05)

ORIGINAL SCALE IN INCHES FOR REDUCED PLANS 0 1 2 3

CU 12
EA 0F0311

DISREGARD PRINTS BEARING EARLIER REVISION DATES

REVISION DATES (PRELIMINARY STAGE ONLY): 2/13/09 4/6/09 6/17/09

SHEET 8 OF 42

FILE => 55-0460-f-a01_1o2.dgn

USERNAME => friehard DATE PLOTTED => 17-DEC-2009 TIME PLOTTED => 06:40

DIST	COUNTY	ROUTE	POST MILES TOTAL PROJECT	SHEET No	TOTAL SHEETS
12	Ora	57	16.2/18.6	886	960

REGISTERED CIVIL ENGINEER — DATE 6-17-09

12-14-09
PLANS APPROVAL DATE

REGISTERED PROFESSIONAL ENGINEER — T. A. Kirilov — No. C67708 — Exp. 6/30/11 — CIVIL — STATE OF CALIFORNIA

The State of California or its officers or agents shall not be responsible for the accuracy or completeness of electronic copies of this plan sheet.

OCTA
550 S MAIN STREET
ORANGE, CA 92868

RBF CONSULTING
14725 ALTON PKWY
IRVINE, CA 92618

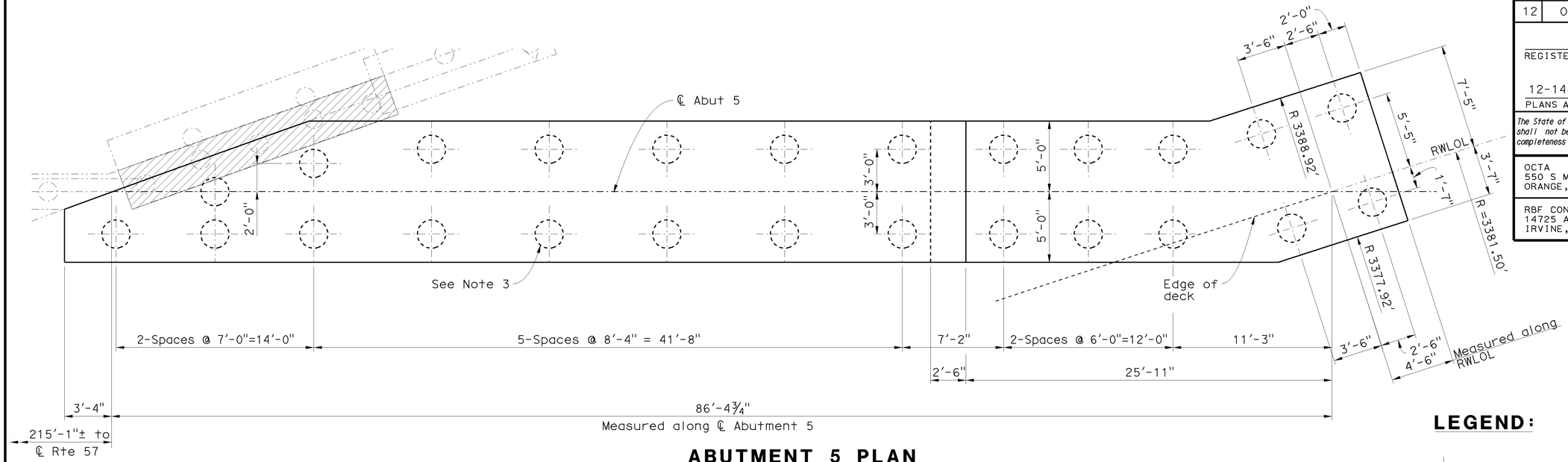

ABUTMENT 5 PLAN

¼" = 1'-0"

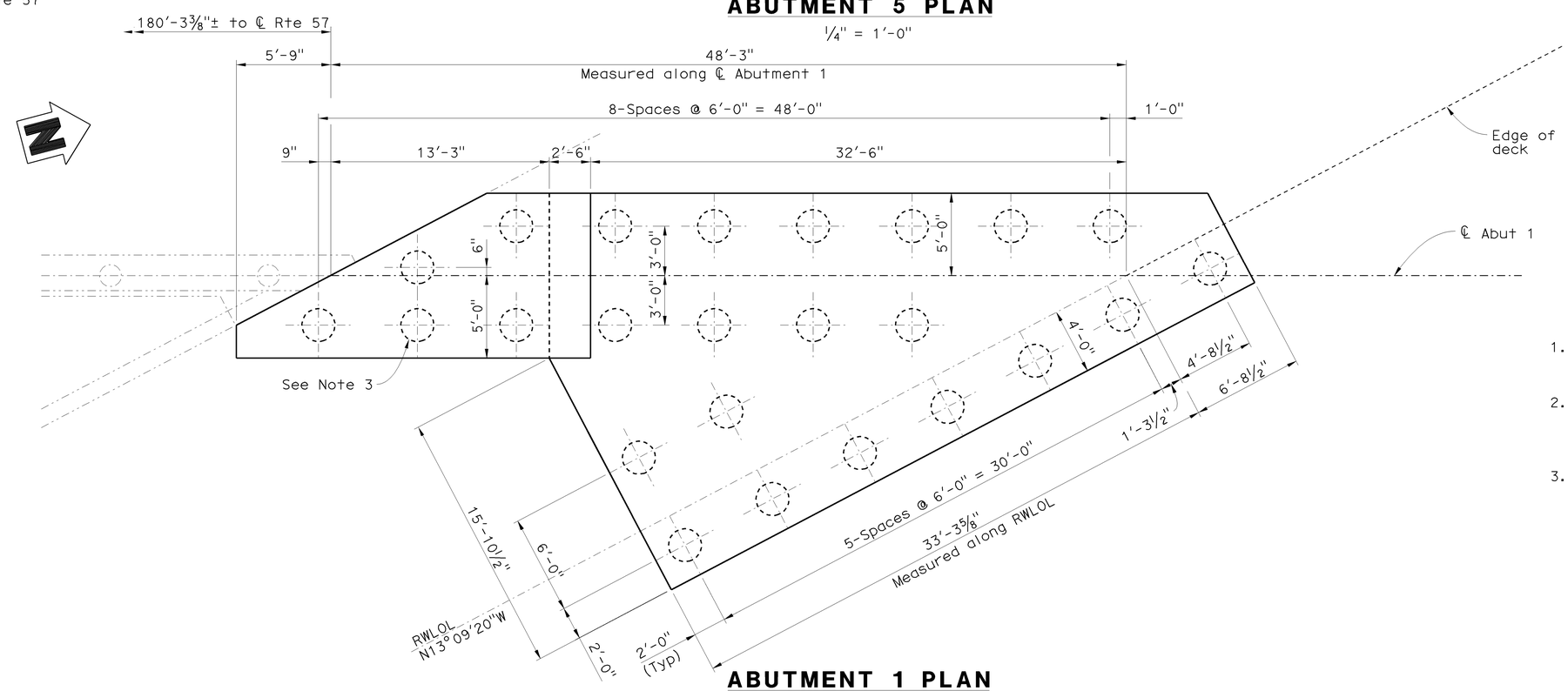

ABUTMENT 1 PLAN

¼" = 1'-0"

LEGEND:

- Indicates 24" dia CIDH Pile
- Limits of Bridge Removal (Portion)
- Indicates Existing Structure
- Indicates New Construction

NOTES:

1. For CIDH piling details, see "Cast-in-Drilled-Hole Piling Details" sheet.
2. For reinforcing details at abutment footings, see "Abutment Details No. 1" and "Abutment Details No. 3" sheets.
3. No two adjacent piles can be constructed concurrently.

NOTE:
THE CONTRACTOR SHALL VERIFY ALL CONTROLLING FIELD DIMENSIONS BEFORE ORDERING OR FABRICATING ANY MATERIAL.

DESIGN OVERSIGHT — Jon Hamaguchi
6-24-09
SIGN OFF DATE

	BY	CHECKED
DESIGN	T. A. Kirilov	F. Sanchez
DETAILS	J. Saldana	H. Montoya
QUANTITIES	CC/CS/SM	VT/KC

PREPARED FOR THE STATE OF CALIFORNIA DEPARTMENT OF TRANSPORTATION

Romeo M. Firme
PROJECT ENGINEER

BRIDGE NO. 55-0460
POST MILE 17.1

PLACENTIA AVENUE UC (WIDEN)
ABUTMENT PILE LAYOUT

DESIGN DETAIL SHEET (ENGLISH) (REV. 2/25/05)

ORIGINAL SCALE IN INCHES FOR REDUCED PLANS 0 1 2 3

CU 12
EA 0F0311

DISREGARD PRINTS BEARING EARLIER REVISION DATES — REVISION DATES (PRELIMINARY STAGE ONLY) 2/23/09 5/26/09 6/17/09

SHEET 9 OF 42

FILE => 55-0460-f-a01_1o3.dgn

USERNAME => trlenard DATE PLOTTED => 17-DEC-2009 TIME PLOTTED => 05:40

DIST	COUNTY	ROUTE	POST MILES TOTAL PROJECT	SHEET No	TOTAL SHEETS
12	Ora	57	16.2/18.6	887	960

REGISTERED CIVIL ENGINEER — DATE 6-17-09

12-14-09
PLANS APPROVAL DATE

REGISTERED PROFESSIONAL ENGINEER — T. A. Kirilov — No. C67708 — Exp. 6/30/11 — CIVIL — STATE OF CALIFORNIA

The State of California or its officers or agents shall not be responsible for the accuracy or completeness of electronic copies of this plan sheet.

OCTA
550 S MAIN STREET
ORANGE, CA 92868

RBF CONSULTING
14725 ALTON PKWY
IRVINE, CA 92618

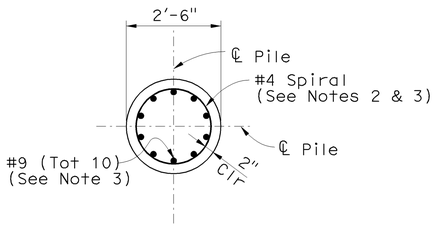

SECTION H-H
No Scale

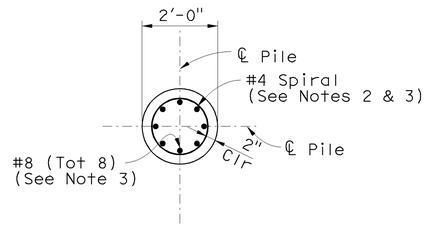

SECTION J-J
No Scale

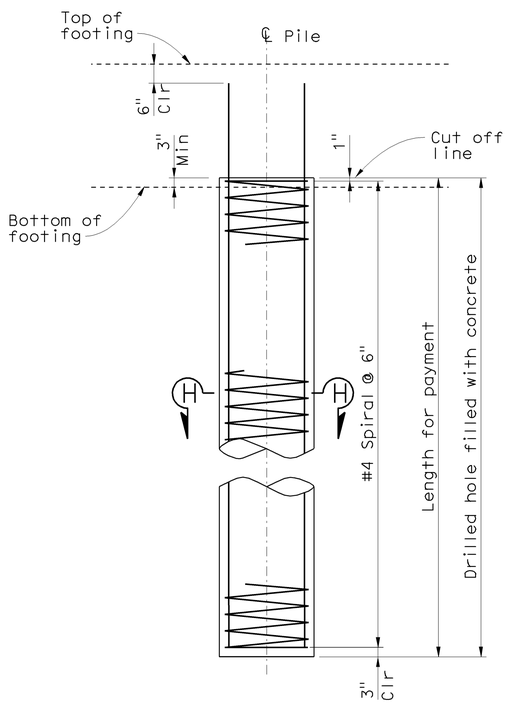

30" DIA CIDH CONC PILING DETAILS BENTS 2, 3 & 4

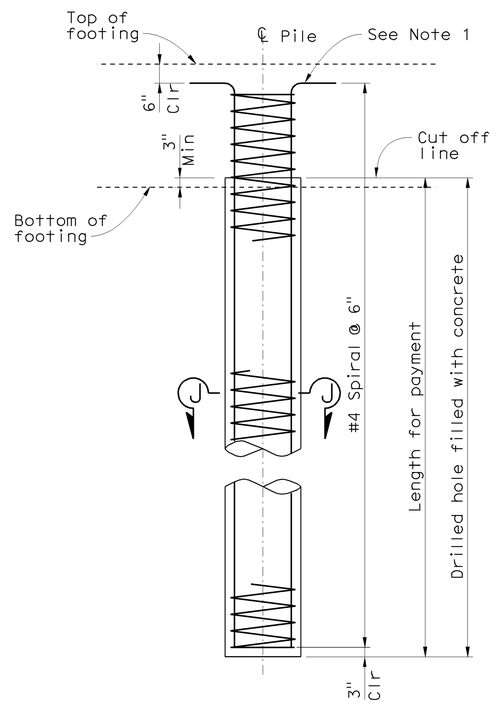

24" DIA CIDH CONC PILING DETAILS ABUT 1 & 5

NOTES:

1. Bar hooks to be oriented to provide 3" min clearance to edge of footing. For piles at corners or near footing step, bar hooks may be oriented parallel to edge of footing.
2. Lapped splices in spiral pile reinf shall be lapped at least 80 bar dia. Spiral pile reinf at splices and at ends shall be terminated with 135° hook with a 6" tail hooked around a longitudinal bar.
3. No lapped splices in pile main reinf or spiral permitted in upper 20'-0" of piles.
4. For pile layouts, see "Abutment Pile Layouts" and "Bent Details No. 1" sheets.

NOTE:
THE CONTRACTOR SHALL VERIFY ALL CONTROLLING FIELD DIMENSIONS BEFORE ORDERING OR FABRICATING ANY MATERIAL.

DESIGN OVERSIGHT — Jon Hamaguchi
6-24-09
SIGN OFF DATE

	BY	CHECKED
DESIGN	T. A. Kirilov	F. Sanchez
DETAILS	J. Saldana	H. Montoya
QUANTITIES	CC/CS/SM	VT/KC

PREPARED FOR THE STATE OF CALIFORNIA DEPARTMENT OF TRANSPORTATION

Romeo M. Firme
PROJECT ENGINEER

BRIDGE NO. 55-0460
POST MILE 17.1

PLACENTIA AVENUE UC (WIDEN)
CAST-IN-DRILLED-HOLE PILING DETAILS

DESIGN DETAIL SHEET (ENGLISH) (REV. 2/25/05)

ORIGINAL SCALE IN INCHES FOR REDUCED PLANS 0 1 2 3

CU 12
EA 0F0311

DISREGARD PRINTS BEARING EARLIER REVISION DATES
REVISION DATES (PRELIMINARY STAGE ONLY) 2/13/09 4/06/09 6/17/09

SHEET 10 OF 42

FILE => 55-0460-f-a01dt001.dgn

USERNAME => rfriehord DATE PLOTTED => 17-DEC-2009 TIME PLOTTED => 05:40

DIST	COUNTY	ROUTE	POST MILES TOTAL PROJECT	SHEET No	TOTAL SHEETS
12	Ora	57	16.2/18.6	888	960

REGISTERED CIVIL ENGINEER — DATE 6-17-09

12-14-09
PLANS APPROVAL DATE

REGISTERED PROFESSIONAL ENGINEER — T. A. Kirilov — No. C67708 — Exp. 6/30/11 — CIVIL — STATE OF CALIFORNIA

The State of California or its officers or agents shall not be responsible for the accuracy or completeness of electronic copies of this plan sheet.

OCTA
550 S MAIN STREET
ORANGE, CA 92868

RBF CONSULTING
14725 ALTON PKWY
IRVINE, CA 92618

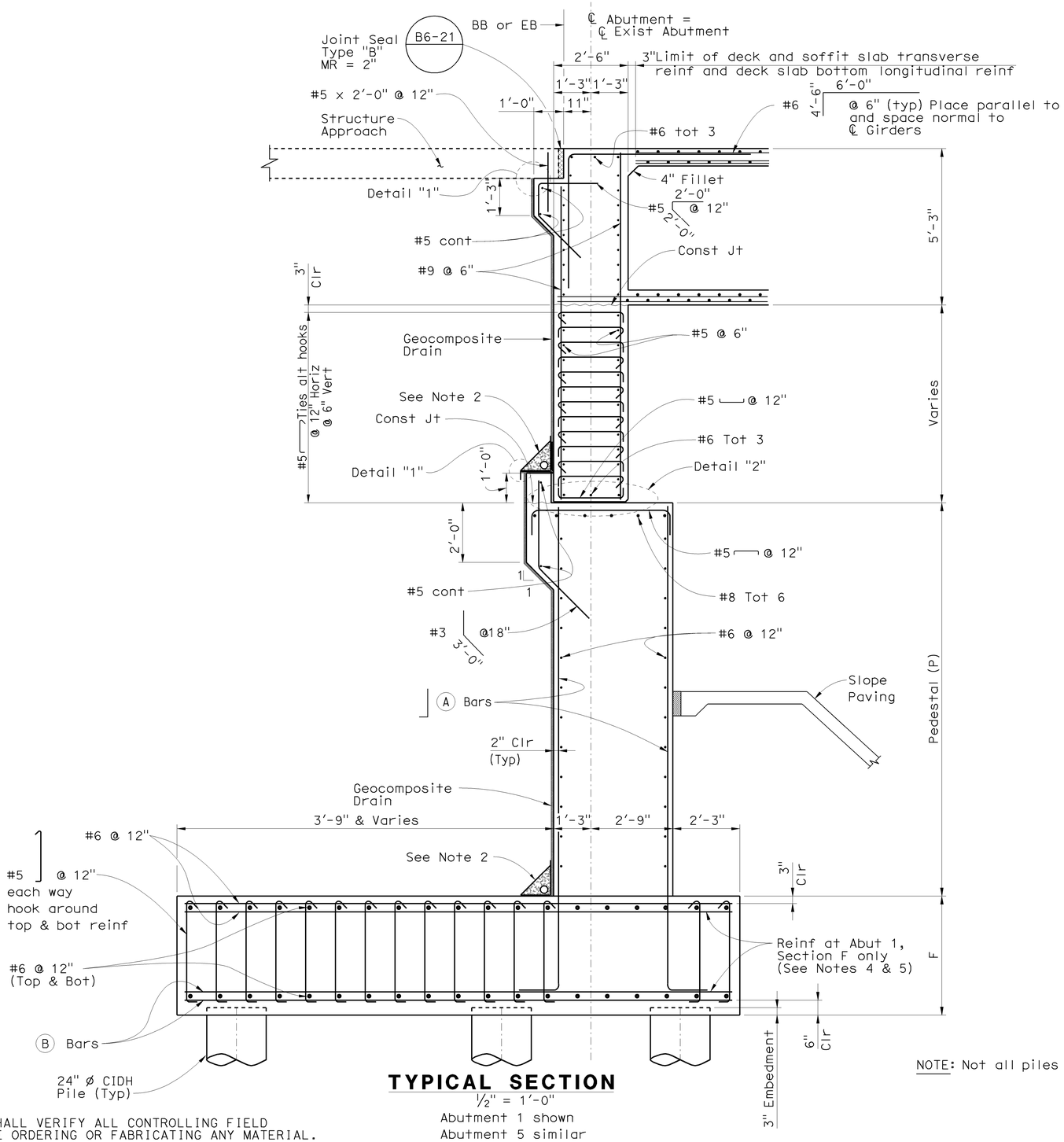

TYPICAL SECTION

1/2" = 1'-0"
Abutment 1 shown
Abutment 5 similar

NOTE:
THE CONTRACTOR SHALL VERIFY ALL CONTROLLING FIELD DIMENSIONS BEFORE ORDERING OR FABRICATING ANY MATERIAL.

NOTES:

1. For Detail "1" and Detail "2", see "Abutment Details No. 2" sheet.
2. For drainage details, see "Structure Approach Drainage Details" sheet.
3. Backfill behind abutment diapragms shall not be placed prior to completion of superstructure. Backfill shall be placed simultaneously at both abutment diaphragms with no more than 2 feet differential in backfill heights between each abutment diaphragm.
4. For location of Reinf Sections E, F and G, see "Abutment Layout" sheets.
5. For placement details of footing reinf, see "Abutment Details No. 3" sheet.
6. For pile layouts and footing dimensions, see "Abutment Pile Layout" sheet.

NOTE: Not all piles shown

ABUTMENT REINF SCHEDULE				
Location	A Bars	B Bars	"F" Dim	"P" Dim
Reinf Section E	#7 @ 12"	#8 @ 12"	2'-6"	7'-0"
Reinf Section F	#8 @ 6"	#11 @ 6"	4'-0"	12'-0"
Reinf Section G	#6 @ 12"	#6 @ 12"	2'-6"	2'-0"

DESIGN OVERSIGHT — Jon Hamaguchi
6-24-09
SIGN OFF DATE

	BY	CHECKED
DESIGN	T. A. Kirilov	F. Sanchez
DETAILS	J. Saldana	H. Montoya
QUANTITIES	CC/CS/SM	VT/KC

PREPARED FOR THE STATE OF CALIFORNIA DEPARTMENT OF TRANSPORTATION

Romeo M. Firme
PROJECT ENGINEER

BRIDGE NO. 55-0460
POST MILE 17.1

PLACENTIA AVENUE UC (WIDEN)
ABUTMENT DETAILS NO. 1

DESIGN DETAIL SHEET (ENGLISH) (REV. 2/25/05)

ORIGINAL SCALE IN INCHES FOR REDUCED PLANS 0 1 2 3

CU 12
EA 0F0311

DISREGARD PRINTS BEARING EARLIER REVISION DATES
REVISION DATES (PRELIMINARY STAGE ONLY) 2/13/09 4/6/09 6/17/09

SHEET 11 OF 42

FILE => 55-0460-f-a01dt01.dgn

USERNAME => rfirenord DATE PLOTTED => 17-DEC-2009 TIME PLOTTED => 05:40

DIST	COUNTY	ROUTE	POST MILES TOTAL PROJECT	SHEET No	TOTAL SHEETS
12	Ora	57	16.2/18.6	889	960

REGISTERED CIVIL ENGINEER — DATE 6-17-09

12-14-09
PLANS APPROVAL DATE

REGISTERED PROFESSIONAL ENGINEER — T.A. Kirilov No. C67708 Exp. 6/30/11 CIVIL — STATE OF CALIFORNIA

The State of California or its officers or agents shall not be responsible for the accuracy or completeness of electronic copies of this plan sheet.

OCTA
550 S MAIN STREET
ORANGE, CA 92868

RBF CONSULTING
14725 ALTON PKWY
IRVINE, CA 92618

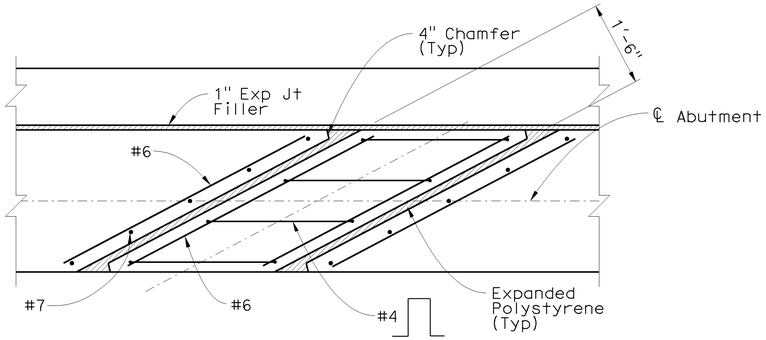

SECTION S-S

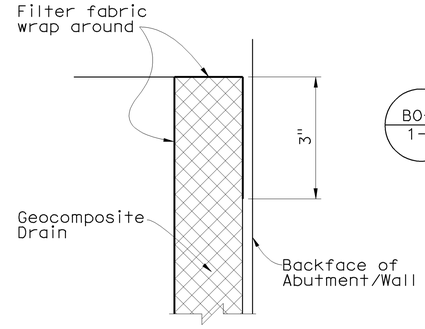

DETAIL "1"

No Scale

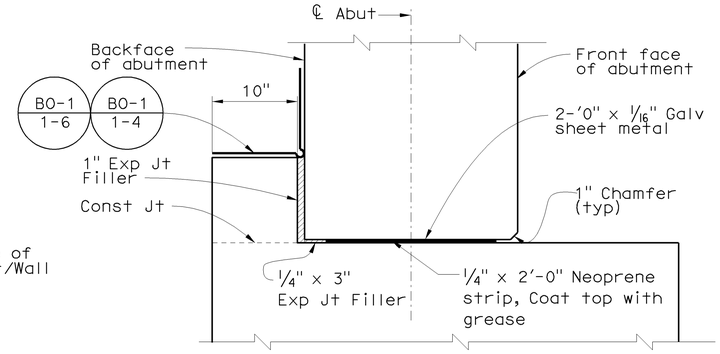

DETAIL "2"

No Scale

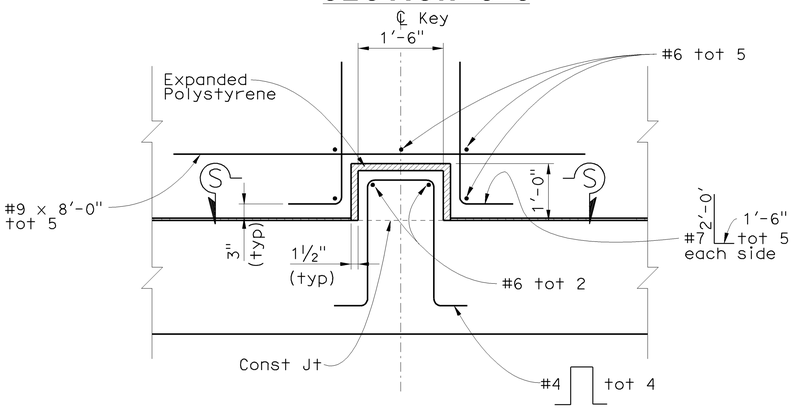

INTERNAL SHEAR KEY

3/4" = 1'-0"

LEGEND:

Indicates Existing Structure

Indicates New Construction

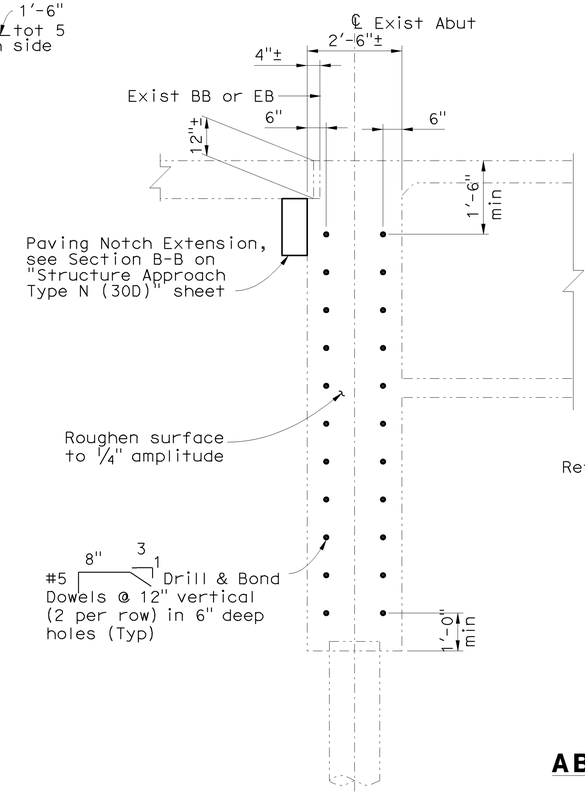

SECTION A-A

1/2" = 1'-0"

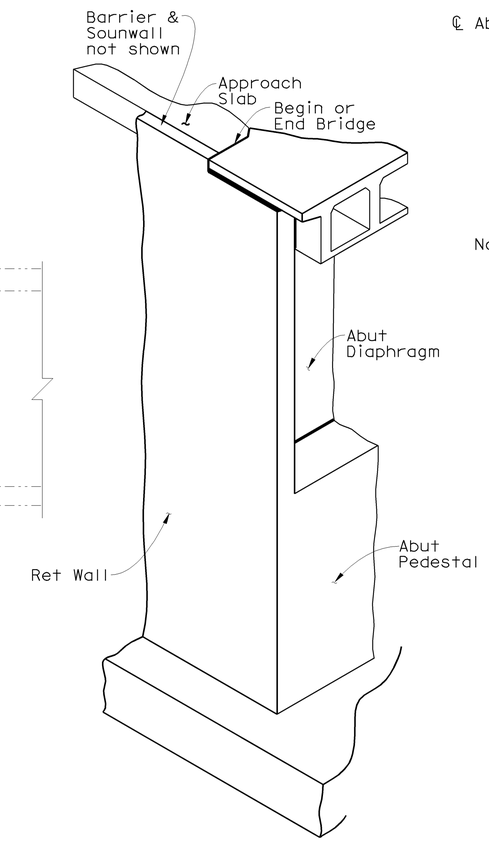

ABUTMENT ISOMETRIC DETAIL

No Scale
(Abutment 1 shown, Abutment 5 similar)

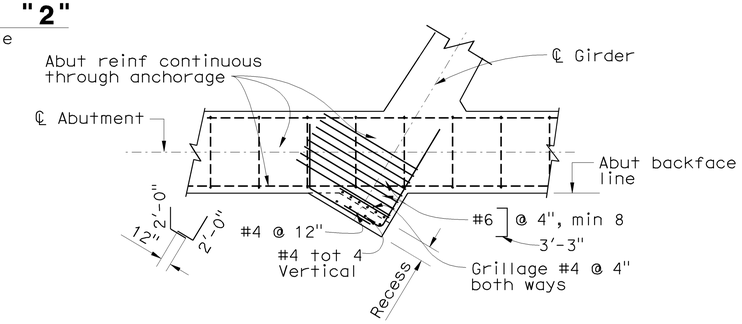

Notes:
1. Recess for anchorage to be filled with concrete.
2. Edge distance of prestressing anchorages shall be 3" min.

ANCHORAGE BLOCKS AT DIAPHRAGM TYPE ABUTMENT

No Scale

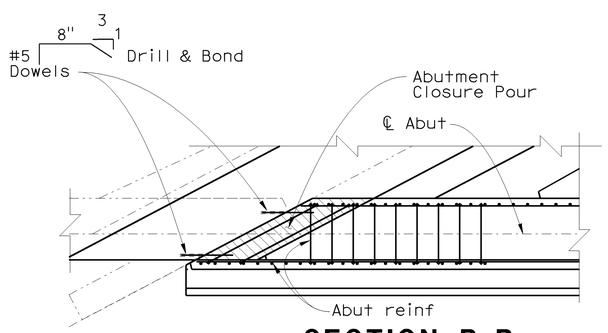

SECTION B-B

3/8" = 1'-0"
(Abutment 1 shown
Abutment 5 similar)

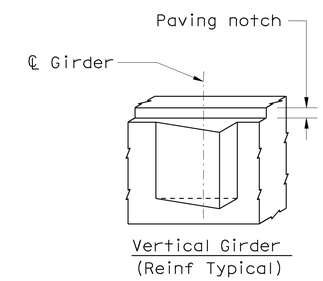

ANCHORAGE BLOCK ILLUSTRATIONS

No Scale

Note: Prestress Anchorage and Bearing Details shown hereon supercede "Prestress Anchorage Details at Seat Type Abutments" shown in B8-5

NOTE:
THE CONTRACTOR SHALL VERIFY ALL CONTROLLING FIELD DIMENSIONS BEFORE ORDERING OR FABRICATING ANY MATERIAL.

DESIGN OVERSIGHT — Jon Hamaguchi
6-24-09
SIGN OFF DATE

	BY	CHECKED
DESIGN	T. A. Kirilov	F. Sanchez
DETAILS	J. Saldana	H. Montoya
QUANTITIES	CC/CS/SM	VT/KC

PREPARED FOR THE STATE OF CALIFORNIA DEPARTMENT OF TRANSPORTATION

Romeo M. Firme
PROJECT ENGINEER

BRIDGE NO. 55-0460
POST MILE 17.1

PLACENTIA AVENUE UC (WIDEN)
ABUTMENT DETAILS NO. 2

DESIGN DETAIL SHEET (ENGLISH) (REV. 2/25/05)

ORIGINAL SCALE IN INCHES FOR REDUCED PLANS 0 1 2 3

CU 12
EA 0F0311

DISREGARD PRINTS BEARING EARLIER REVISION DATES — REVISION DATES (PRELIMINARY STAGE ONLY) 2/23/09 5/26/09 6/17/09

SHEET 12 OF 42

FILE => 55-0460-f-a01dt02.dgn

USERNAME => trlenard DATE PLOTTED => 17-DEC-2009 TIME PLOTTED => 05:40

DIST	COUNTY	ROUTE	POST MILES TOTAL PROJECT	SHEET No	TOTAL SHEETS
12	Ora	57	16.2/18.6	890	960

REGISTERED CIVIL ENGINEER 6-17-09 DATE

12-14-09
PLANS APPROVAL DATE

REGISTERED PROFESSIONAL ENGINEER T. A. Kirilov No. C67708 Exp. 6/30/11 CIVIL STATE OF CALIFORNIA

The State of California or its officers or agents shall not be responsible for the accuracy or completeness of electronic copies of this plan sheet.

OCTA
550 S MAIN STREET
ORANGE, CA 92868

RBF CONSULTING
14725 ALTON PKWY
IRVINE, CA 92618

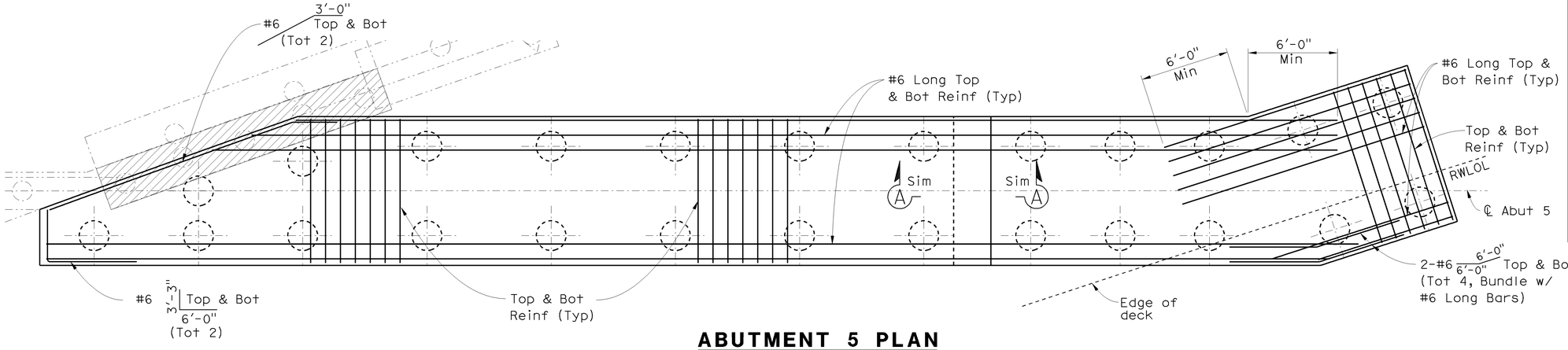

ABUTMENT 5 PLAN

1/4" = 1'-0"
(Not all reinf shown)

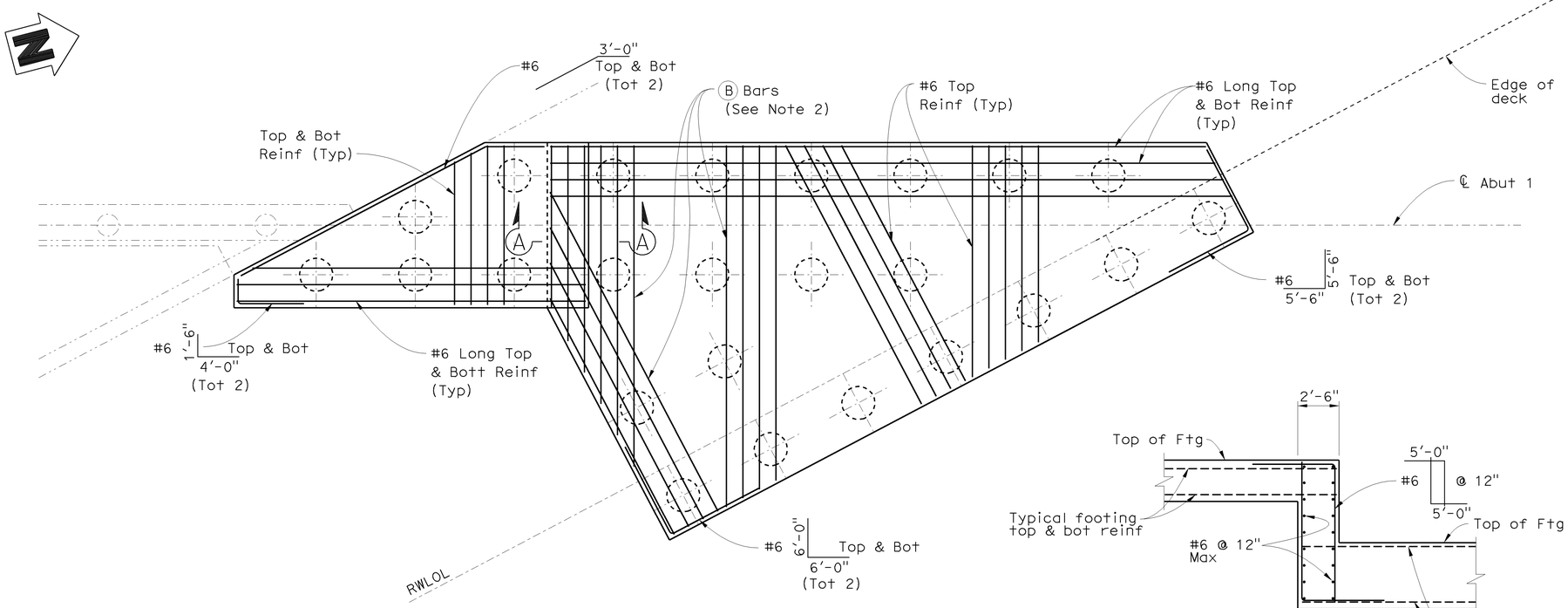

ABUTMENT 1 PLAN

1/4" = 1'-0"
(Not all reinf shown)

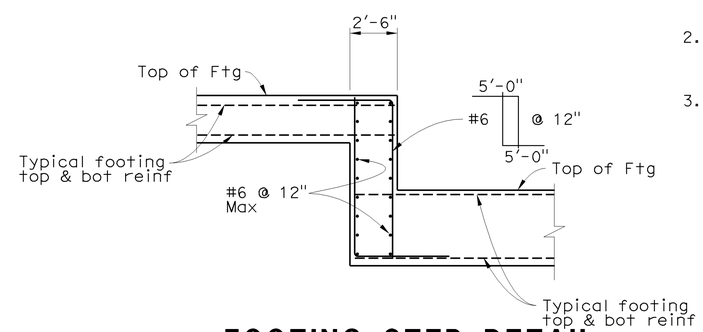

FOOTING STEP DETAIL SECTION A-A

1/4" = 1'-0"
(Not all reinf shown)

LEGEND:

- Indicates 24" dia CIDH Pile
- Indicates Existing Structure
- Indicates New Construction
- Limits of Bridge Removal (Portion)

NOTES:

1. For CIDH piling details, see "Cast-in-Drilled-Hole Piling Details" sheet.
2. For additional reinforcing details at abutment footings, see "Abutment Details No. 1" sheet.
3. For pile layout and footing dimensions, see "Abutment Pile Layouts" sheet.

NOTE:
THE CONTRACTOR SHALL VERIFY ALL CONTROLLING FIELD DIMENSIONS BEFORE ORDERING OR FABRICATING ANY MATERIAL.

DESIGN OVERSIGHT Jon Hamaguchi
6-24-09
SIGN OFF DATE

	BY	CHECKED
DESIGN	T. A. Kirilov	F. Sanchez
DETAILS	J. Saldana	H. Montoya
QUANTITIES	CC/CS/SM	VT/KC

PREPARED FOR THE STATE OF CALIFORNIA DEPARTMENT OF TRANSPORTATION

Romeo M. Firme
PROJECT ENGINEER

BRIDGE NO. 55-0460
POST MILE 17.1

PLACENTIA AVENUE UC (WIDEN)
ABUTMENT DETAILS NO. 3

DESIGN DETAIL SHEET (ENGLISH) (REV. 2/25/05)

ORIGINAL SCALE IN INCHES FOR REDUCED PLANS 0 1 2 3

CU 12
EA 0F0311

DISREGARD PRINTS BEARING EARLIER REVISION DATES
REVISION DATES (PRELIMINARY STAGE ONLY) 2/13/09 3/16/09 6/17/09

SHEET 13 OF 42

FILE => 55-0460-f-a01dt03.dgn

USERNAME => trlenard DATE PLOTTED => 17-DEC-2009 TIME PLOTTED => 05:41

DIST	COUNTY	ROUTE	POST MILES TOTAL PROJECT	SHEET No	TOTAL SHEETS
12	Ora	57	16.2/18.6	891	960

REGISTERED CIVIL ENGINEER — DATE 6-17-09

12-14-09
PLANS APPROVAL DATE

REGISTERED PROFESSIONAL ENGINEER — T. A. Kirilov No. C67708 Exp. 6/30/11 CIVIL — STATE OF CALIFORNIA

The State of California or its officers or agents shall not be responsible for the accuracy or completeness of electronic copies of this plan sheet.

OCTA
550 S MAIN STREET
ORANGE, CA 92868

RBF CONSULTING
14725 ALTON PKWY
IRVINE, CA 92618

NOTES:

1. Extend inside face vertical reinf 6" into barrier.
2. See isometric detail on "Abutment Details No. 2" sheet.
3. For plan of Abutment 1 Retaining Wall, see "Abutment 1 Layout" sheet.
4. For typical abut & footing reinf, see "Abutment Details No. 1" sheet.
5. For soundwall reinf and aesthetics, see "Soundwall-Masonry Block" sheets.
6. For Fractured Rib Texture details, see "Concrete Barrier Type 736 (Mod)" sheet.
7. For drainage details, see "Structure Approach Drainage Details" sheet.
8. Horizontal reinf may be adjusted to clear abut pedestal reinf.

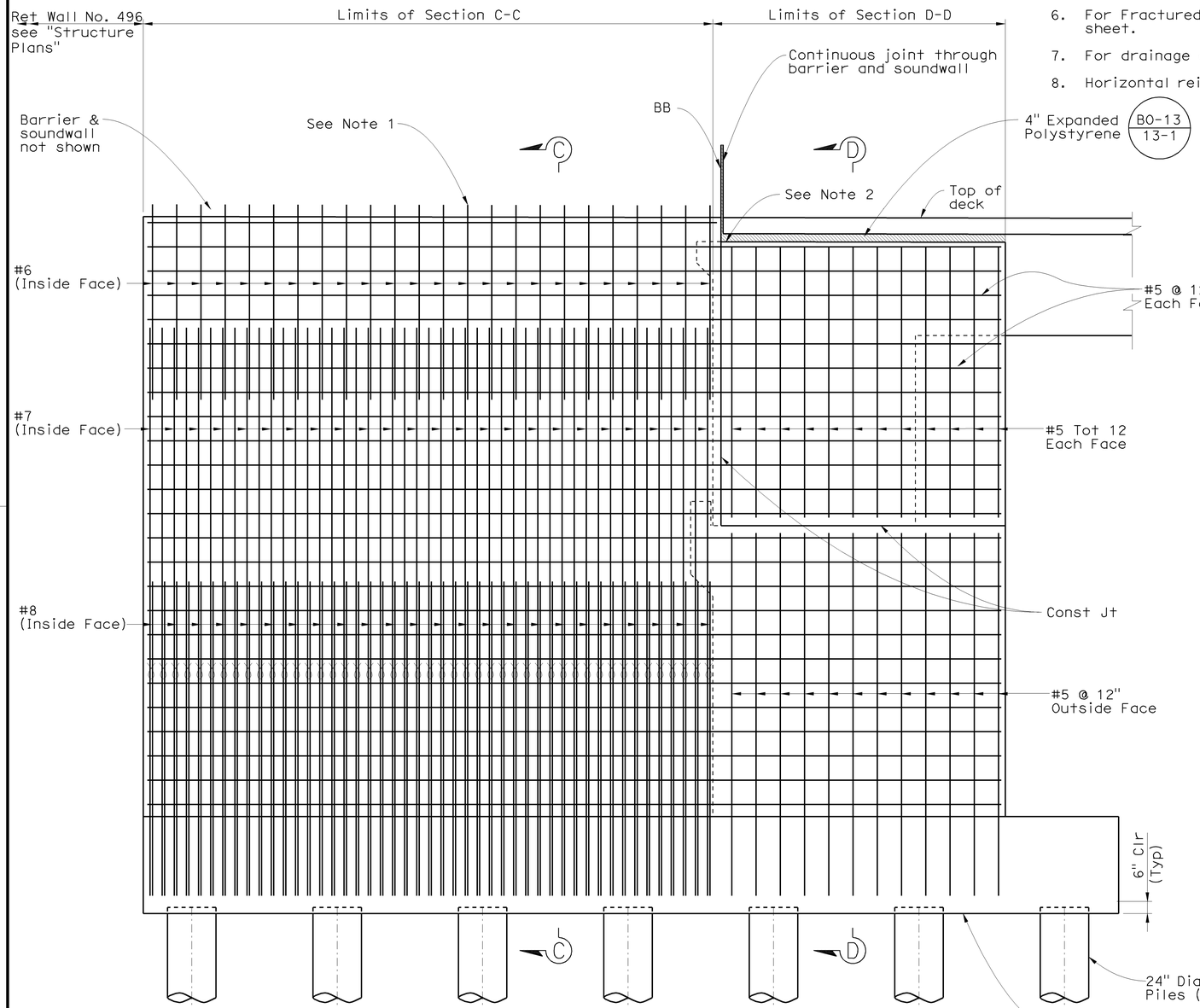

ELEVATION - RETAINING WALL AT ABUT 1

3/8" = 1'-0"

NOTE:
THE CONTRACTOR SHALL VERIFY ALL CONTROLLING FIELD DIMENSIONS BEFORE ORDERING OR FABRICATING ANY MATERIAL.

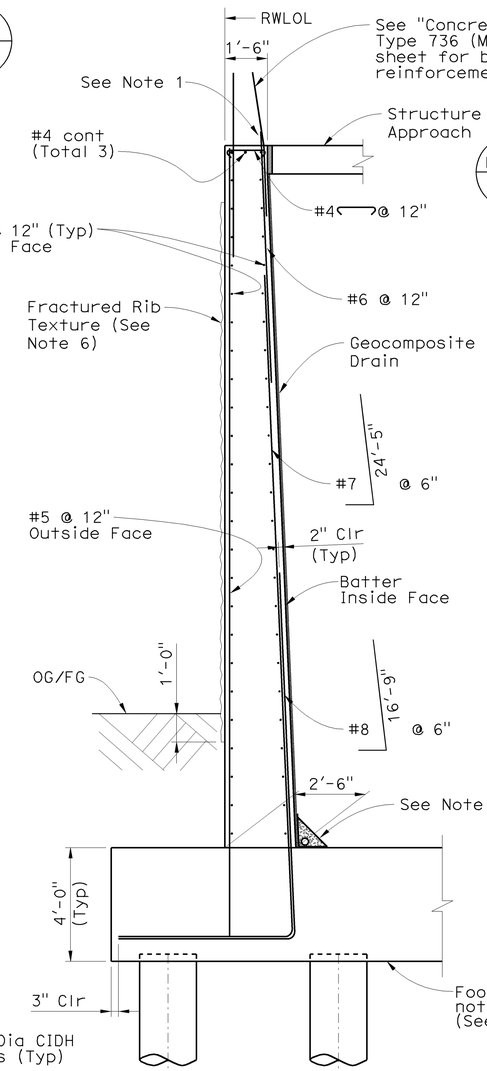

SECTION C-C

3/8" = 1'-0"

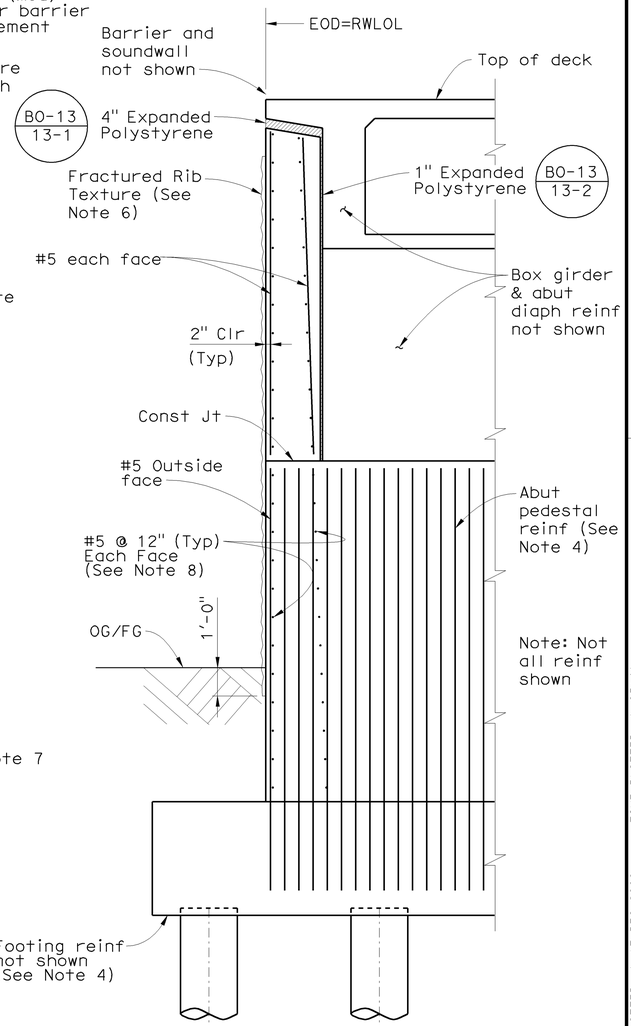

Note: Not all piles shown.

SECTION D-D

3/8" = 1'-0"

DESIGN OVERSIGHT Jon Hamaguchi — 6-24-09 SIGN OFF DATE	DESIGN	BY T. A. Kirilov	CHECKED F. Sanchez	PREPARED FOR THE STATE OF CALIFORNIA DEPARTMENT OF TRANSPORTATION	Romeo M. Firme — PROJECT ENGINEER
	DETAILS	BY J. Saldana	CHECKED H. Montoya		
	QUANTITIES	BY CC/CS/SM	CHECKED VT/KC		

BRIDGE NO. 55-0460 — POST MILE 17.1

PLACENTIA AVENUE UC (WIDEN)
ABUTMENT DETAILS NO. 4

DESIGN DETAIL SHEET (ENGLISH) (REV. 2/25/05)

ORIGINAL SCALE IN INCHES FOR REDUCED PLANS 0 1 2 3

CU 12
EA 0F0311

DISREGARD PRINTS BEARING EARLIER REVISION DATES — REVISION DATES (PRELIMINARY STAGE ONLY) 2/13/09 5/8/09 6/17/09

SHEET 14 OF 42

FILE => 55-0460-f-a01dt04.dgn

USERNAME => trlenard DATE PLOTTED => 17-DEC-2009 TIME PLOTTED => 05:41

DIST	COUNTY	ROUTE	POST MILES TOTAL PROJECT	SHEET No	TOTAL SHEETS
12	Ora	57	16.2/18.6	892	960

REGISTERED CIVIL ENGINEER 6-17-09 DATE

12-14-09
PLANS APPROVAL DATE

REGISTERED PROFESSIONAL ENGINEER T. A. Kirilov No. C67708 Exp. 6/30/11 CIVIL STATE OF CALIFORNIA

The State of California or its officers or agents shall not be responsible for the accuracy or completeness of electronic copies of this plan sheet.

OCTA
550 S MAIN STREET
ORANGE, CA 92868

RBF CONSULTING
14725 ALTON PKWY
IRVINE, CA 92618

NOTES:

1. Extend inside face vertical reinf 6" into barrier.
2. See isometric detail on "Abutment Details No. 2" sheet.
3. For plan of Abutment 5 Retaining Wall, see "Abutment 5 Layout" sheet.
4. For typical abut & footing reinf, see "Abutment Details No. 1" sheet.
5. For soundwall reinf and aesthetics, see "Soundwall-Masonry Block" sheets.
6. For Fractured Rib Texture details, see "Concrete Barrier Type 736 (Mod)" sheet.
7. For drainage details, see "Structure Approach Drainage Details" sheet.
8. Horizontal reinf may be adjusted to clear abut pedestal reinf.

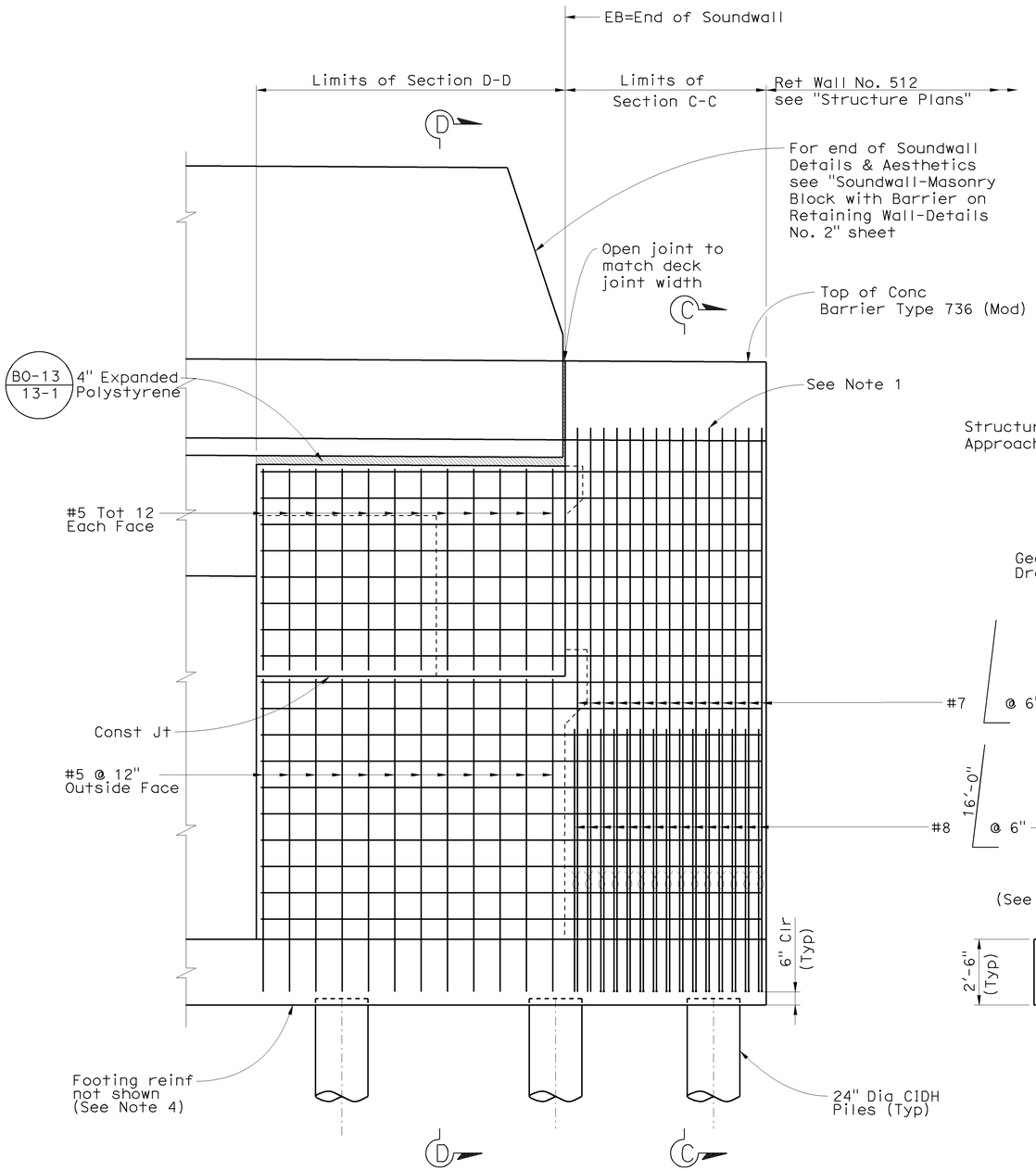

ELEVATION - RETAINING WALL AT ABUT 5

3/8" = 1'-0"

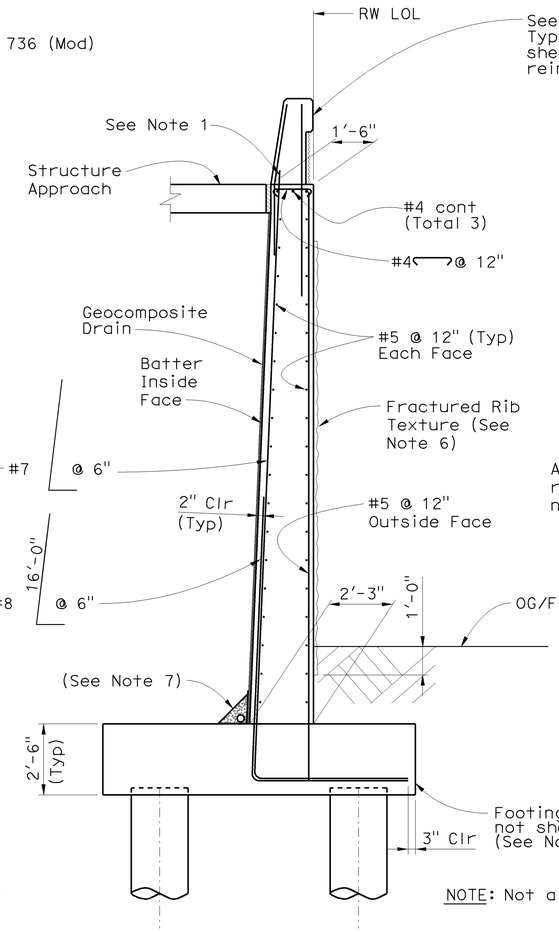

NOTE: Not all piles shown

SECTION C-C

3/8" = 1'-0"

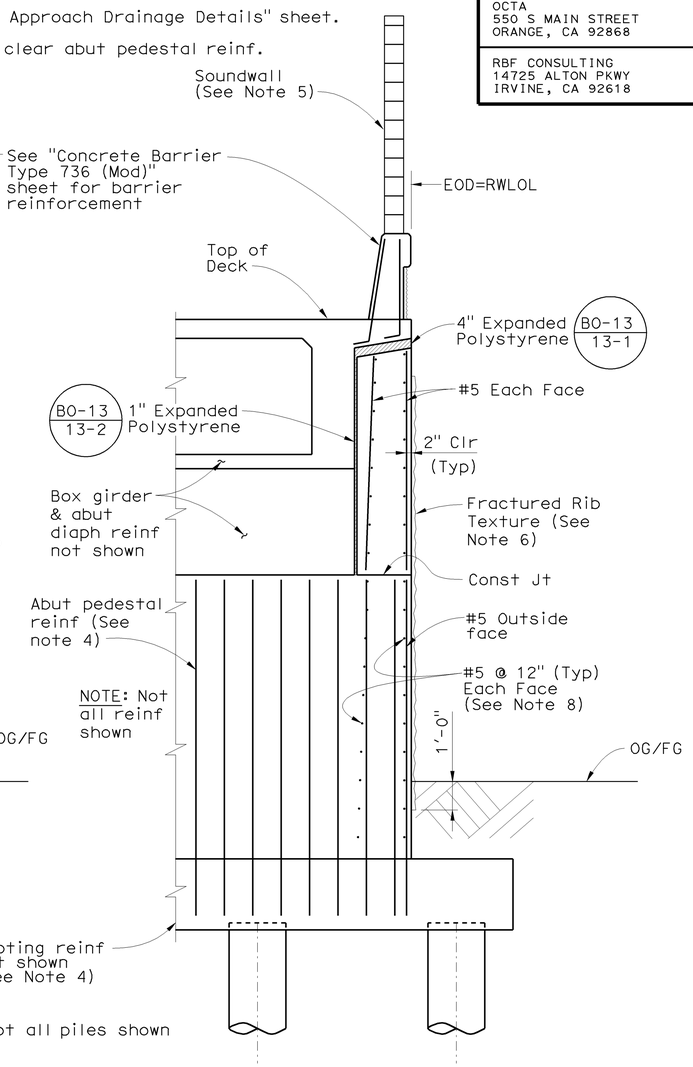

SECTION D-D

3/8" = 1'-0"

NOTE:
THE CONTRACTOR SHALL VERIFY ALL CONTROLLING FIELD DIMENSIONS BEFORE ORDERING OR FABRICATING ANY MATERIAL.

Jon Hamaguchi
DESIGN OVERSIGHT Jon Hamaguchi
6-24-09
SIGN OFF DATE

	BY	CHECKED
DESIGN	T. A. Kirilov	F. Sanchez
DETAILS	J. Saldana	H. Montoya
QUANTITIES	CC/CS/SM	VT/KC

PREPARED FOR THE STATE OF CALIFORNIA DEPARTMENT OF TRANSPORTATION

Romeo M. Firme
PROJECT ENGINEER

BRIDGE NO. 55-0460
POST MILE 17.1

PLACENTIA AVENUE UC (WIDEN)
ABUTMENT DETAILS NO. 5

DESIGN DETAIL SHEET (ENGLISH) (REV. 2/25/05)

ORIGINAL SCALE IN INCHES FOR REDUCED PLANS 0 1 2 3

CU 12
EA 0F0311

DISREGARD PRINTS BEARING EARLIER REVISION DATES → 2/13/09 3/26/09 6/17/09

REVISION DATES (PRELIMINARY STAGE ONLY)

SHEET 15 OF 42

FILE => 55-0460-f-a01dt05.dgn

USERNAME => trlenard DATE PLOTTED => 17-DEC-2009 TIME PLOTTED => 05:41

DIST	COUNTY	ROUTE	POST MILES TOTAL PROJECT	SHEET No	TOTAL SHEETS
12	Ora	57	16.2/18.6	893	960

REGISTERED CIVIL ENGINEER 6-17-09 DATE

12-14-09
PLANS APPROVAL DATE

REGISTERED PROFESSIONAL ENGINEER T.A. Kirilov No. C67708 Exp. 6/30/11 CIVIL STATE OF CALIFORNIA

The State of California or its officers or agents shall not be responsible for the accuracy or completeness of electronic copies of this plan sheet.

OCTA
550 S MAIN STREET
ORANGE, CA 92868

RBF CONSULTING
14725 ALTON PKWY
IRVINE, CA 92618

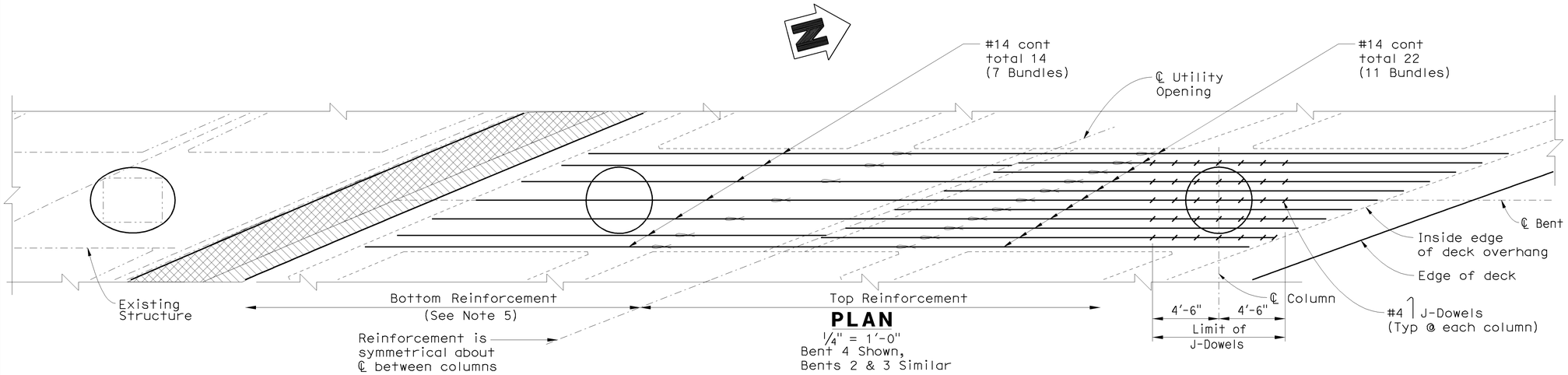

PLAN
1/4" = 1'-0"
Bent 4 Shown,
Bents 2 & 3 Similar

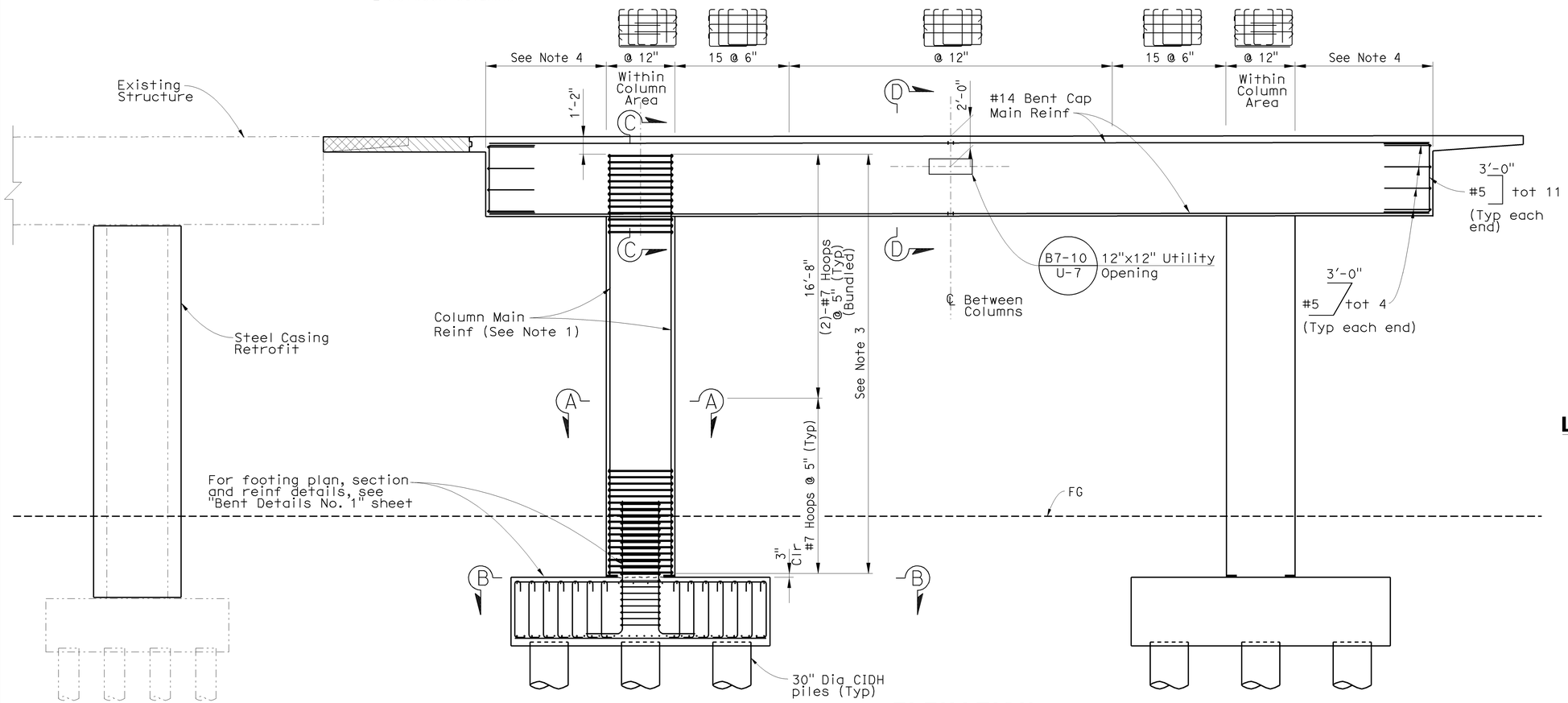

ELEVATION
1/4" = 1'-0"
Bent 4 Shown,
Bents 2 & 3 Similar

NOTES:

1. No splices permitted in Column Main Reinf.
2. Bent cap main reinf may be butt spliced at ℄ between columns. Splices shall meet the "Service Splice" Requirements and shall be alternated about ℄ between columns.
3. All hoops shall be butt welded and shall meet the "Ultimate Splice" requirements.
4. For stirrups at skewed ends, see "Bent Details No. 2" sheet.
5. For detail of bar placement through columns, see "Bent Details No. 2" sheet.
6. For sections A-A & B-B, see "Bent Details No. 1" sheet.
7. For Sections C-C & D-D, see "Bent Details No. 2" sheet.

LEGEND:

- Indicates Existing Structure
- Indicates New Construction
- Indicates Bundled Bars
- Indicates Allowable Butt Splice Location
- Limits of Bridge Removal (Portion)
- Closure Pour

NOTE:
THE CONTRACTOR SHALL VERIFY ALL CONTROLLING FIELD DIMENSIONS BEFORE ORDERING OR FABRICATING ANY MATERIAL.

DESIGN OVERSIGHT Jon Hamaguchi
6-24-09
SIGN OFF DATE

	BY	CHECKED
DESIGN	T. A. Kirilov	F. Sanchez
DETAILS	J. Saldana	H. Montoya
QUANTITIES	CC/CS/SM	VT/KC

PREPARED FOR THE STATE OF CALIFORNIA DEPARTMENT OF TRANSPORTATION

Romeo M. Firme
PROJECT ENGINEER

BRIDGE NO. 55-0460
POST MILE 17.1

PLACENTIA AVENUE UC (WIDEN)
BENT LAYOUT

DESIGN DETAIL SHEET (ENGLISH) (REV. 2/25/05)

ORIGINAL SCALE IN INCHES FOR REDUCED PLANS 0 1 2 3

CU 12
EA 0F0311

DISREGARD PRINTS BEARING EARLIER REVISION DATES

REVISION DATES (PRELIMINARY STAGE ONLY) 2/13/09 4/06/09 6/17/09

SHEET 16 OF 42

FILE => 55-0460-h-b01_1o01.dgn

USERNAME => rfriehord DATE PLOTTED => 17-DEC-2009 TIME PLOTTED => 08:41

DIST	COUNTY	ROUTE	POST MILES TOTAL PROJECT	SHEET No	TOTAL SHEETS
12	Ora	57	16.2/18.6	894	960

REGISTERED CIVIL ENGINEER 6-17-09 DATE

12-14-09
PLANS APPROVAL DATE

REGISTERED PROFESSIONAL ENGINEER T. A. Kirilov No. C67708 Exp. 6/30/11 CIVIL STATE OF CALIFORNIA

The State of California or its officers or agents shall not be responsible for the accuracy or completeness of electronic copies of this plan sheet.

OCTA
550 S MAIN STREET
ORANGE, CA 92868

RBF CONSULTING
14725 ALTON PKWY
IRVINE, CA 92618

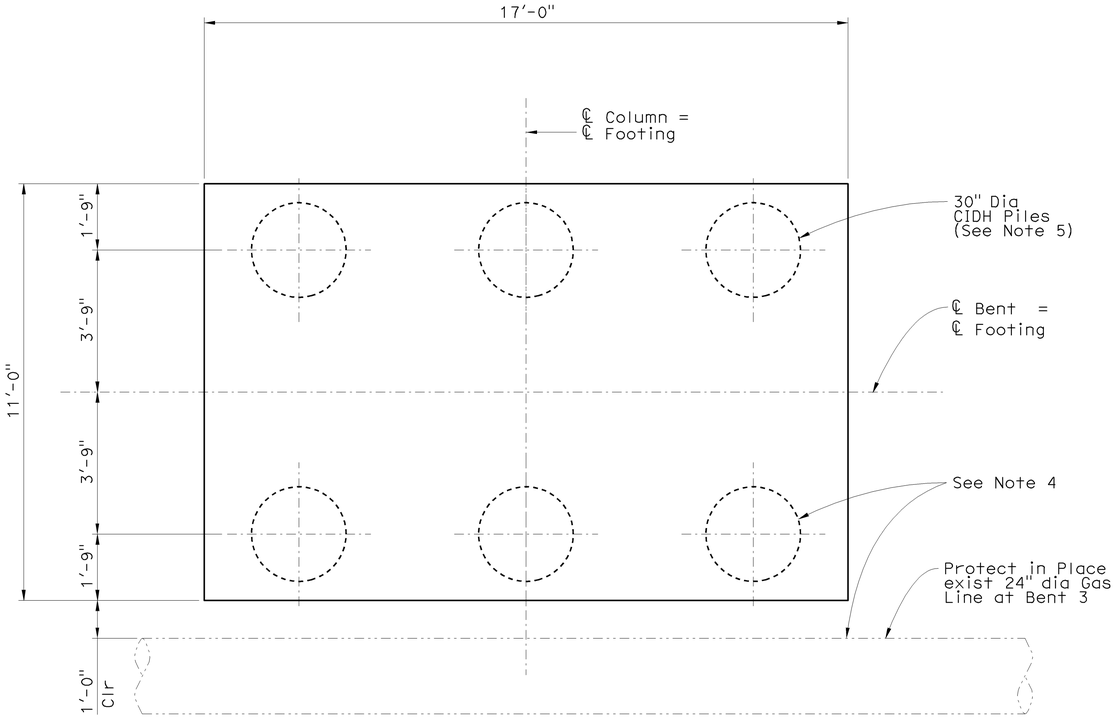

FOOTING PLAN

½" = 1'-0"

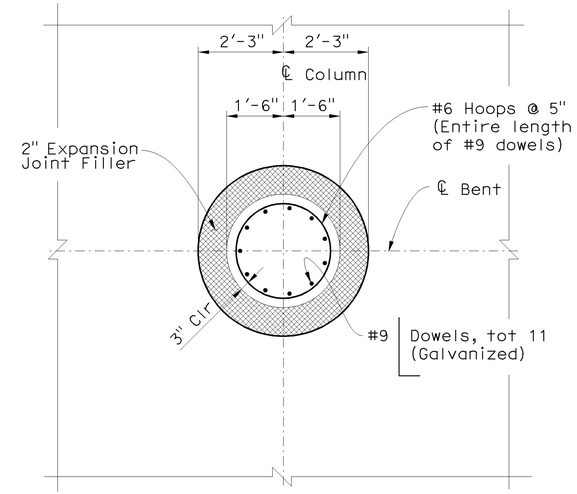

SECTION B-B

½" = 1'-0"

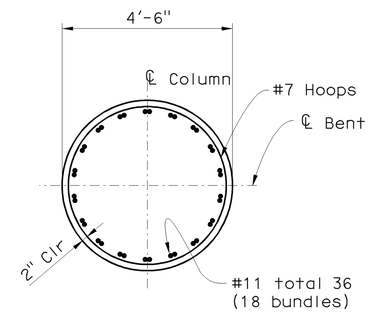

SECTION A-A

½" = 1'-0"

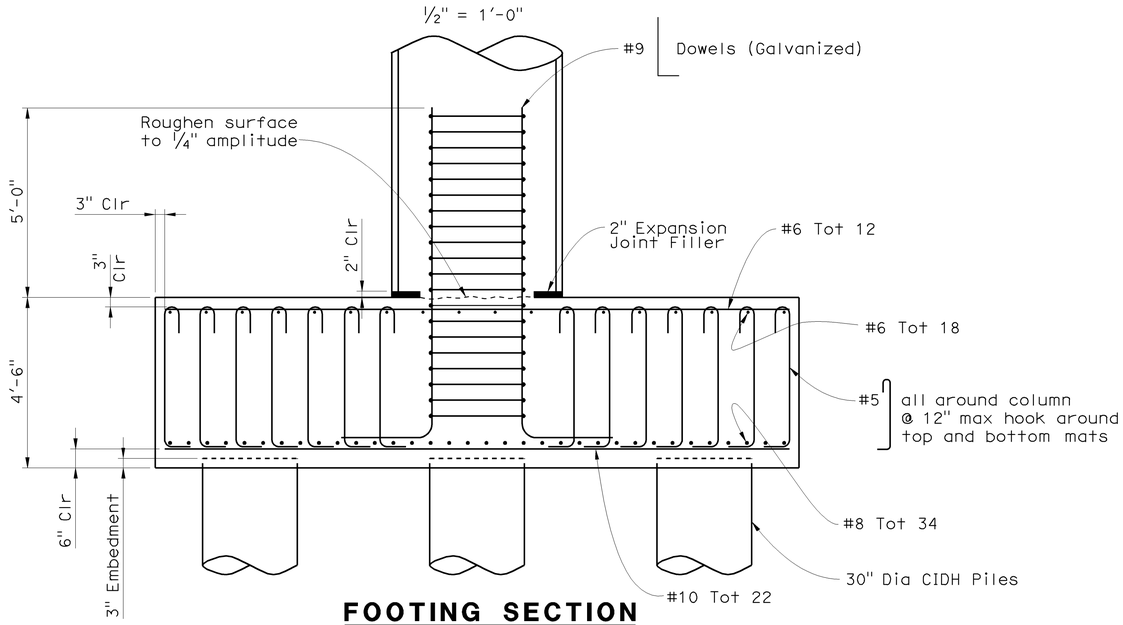

FOOTING SECTION

½" = 1'-0"

NOTE:
THE CONTRACTOR SHALL VERIFY ALL CONTROLLING FIELD DIMENSIONS BEFORE ORDERING OR FABRICATING ANY MATERIAL.

NOTES:

1. All hoops shall be butt welded and shall meet the Ultimate Splice Requirements.
2. For pile details, see "Cast-in-Drilled Hole Piling Details" sheet.
3. For location of sections A-A & B-B see "Bent Layout" sheet.
4. At Bent 3, the row of piles adjacent to the existing gas line shall be constructed before excavation. Pothole in 3 locations using vacuum extraction method to expose and locate the gas line. Use vacuum extraction to excavate the area of the CIDH piles to an elevation 1' below the gas line. Prior to drilling and construction of the CIDH piles, place a metal plate over the potholes. Complete footing work using vacuum extraction for any excavation within 2' of the existing gas line.
5. No two adjacent piles can be constructed concurrently.

LEGEND:

Indicates Existing Structure

Indicates New Construction

DESIGN OVERSIGHT Jon Hamaguchi
6-24-09
SIGN OFF DATE

	BY	CHECKED
DESIGN	T. A. Kirilov	F. Sanchez
DETAILS	J. Saldana	H. Montoya
QUANTITIES	CC/CS/SM	VT/KC

PREPARED FOR THE STATE OF CALIFORNIA DEPARTMENT OF TRANSPORTATION

Romeo M. Firme
PROJECT ENGINEER

BRIDGE NO. 55-0460
POST MILE 17.1

PLACENTIA AVENUE UC (WIDEN)
BENT DETAILS NO.1

DESIGN DETAIL SHEET (ENGLISH) (REV. 2/25/05)

ORIGINAL SCALE IN INCHES FOR REDUCED PLANS 0 1 2 3

CU 12
EA 0F0311

DISREGARD PRINTS BEARING EARLIER REVISION DATES

REVISION DATES (PRELIMINARY STAGE ONLY) 2/23/09 3/16/09 6/17/09

SHEET 17 OF 42

FILE => 55-0460-h-b01dt01.dgn

USERNAME => trlenard DATE PLOTTED => 17-DEC-2009 TIME PLOTTED => 06:41

DIST	COUNTY	ROUTE	POST MILES TOTAL PROJECT	SHEET No	TOTAL SHEETS
12	Ora	57	16.2/18.6	895	960

REGISTERED CIVIL ENGINEER 6-17-09 DATE

12-14-09
PLANS APPROVAL DATE

REGISTERED PROFESSIONAL ENGINEER T. A. Kirilov No. C67708 Exp. 6/30/11 CIVIL STATE OF CALIFORNIA

The State of California or its officers or agents shall not be responsible for the accuracy or completeness of electronic copies of this plan sheet.

OCTA
550 S MAIN STREET
ORANGE, CA 92868

RBF CONSULTING
14725 ALTON PKWY
IRVINE, CA 92618

NOTES:

1. Vertically and horizontally alternate 135° bends on stirrup cross-ties.
2. Reinforcement may be bent or adjusted to clear P/S ducts.

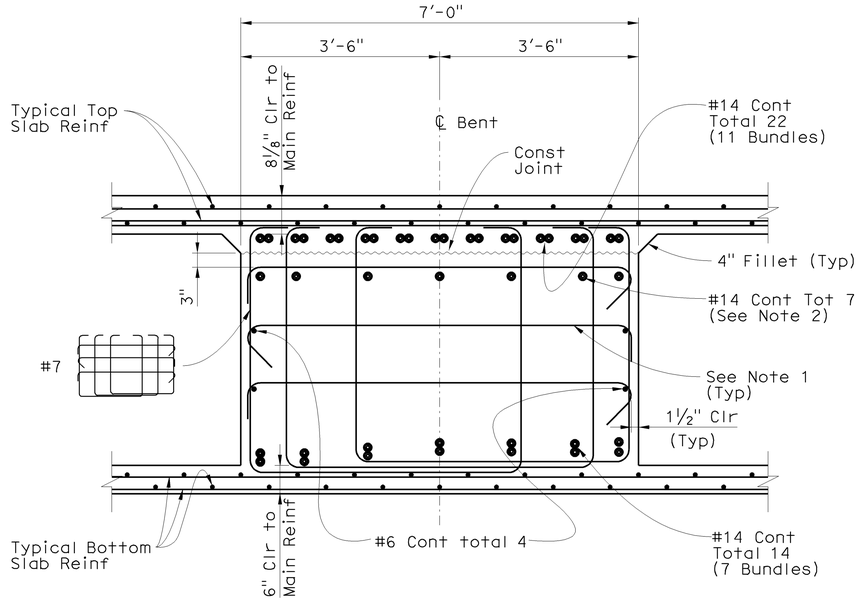

SECTION D-D

3/4" = 1'-0"

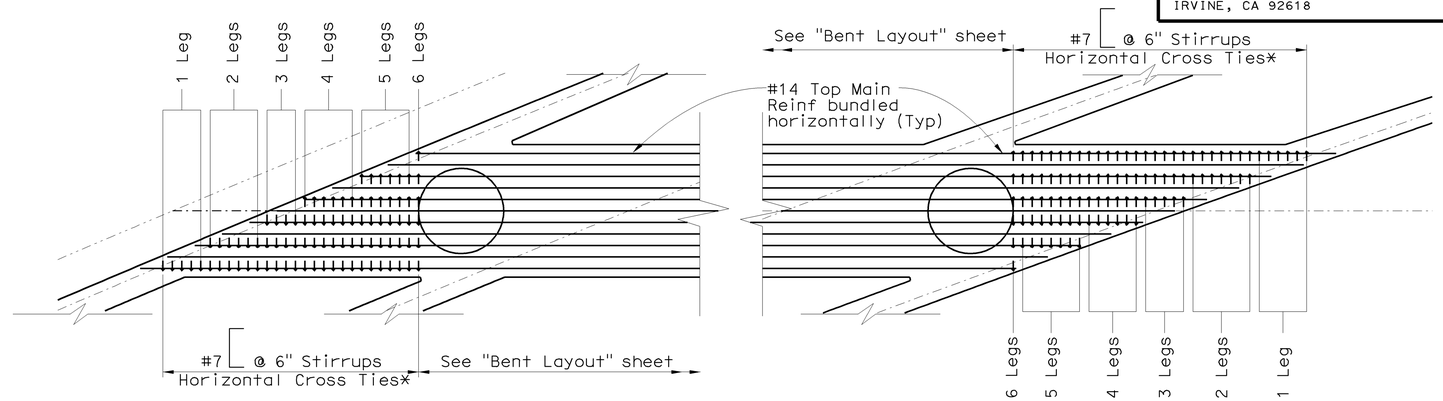

* Horizontal Cross Ties per Section D-D.
Length varies with skew.

STIRRUP SPACING AT SKEWED ENDS

1/4" = 1'-0"

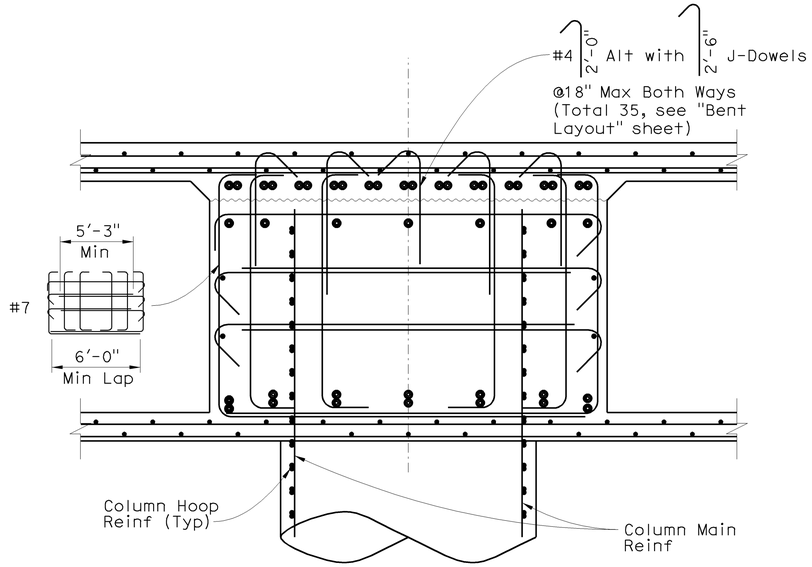

SECTION C-C

3/4" = 1'-0"

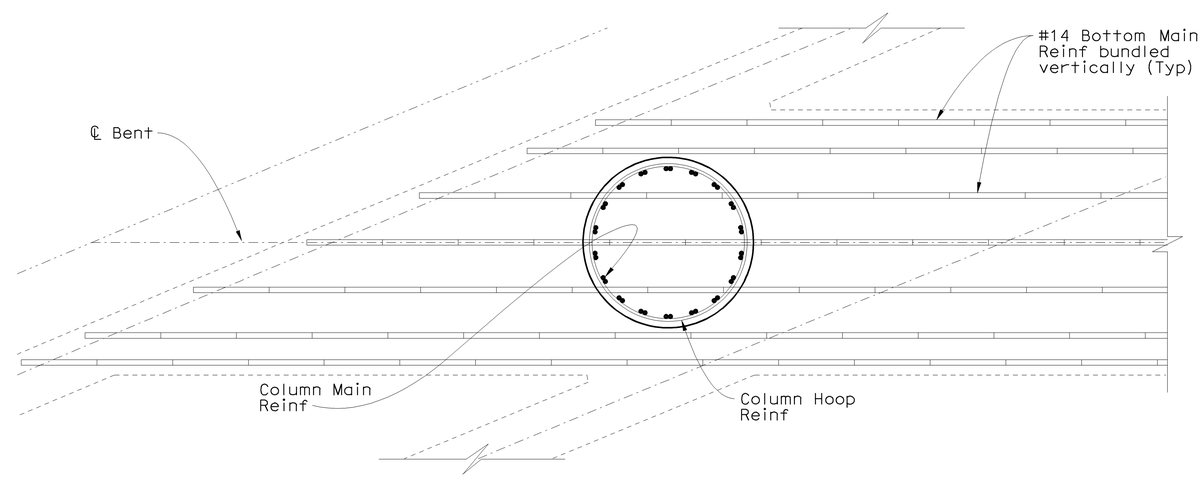

BAR PLACEMENT DETAIL

1/2" = 1'-0"

NOTE:
THE CONTRACTOR SHALL VERIFY ALL CONTROLLING FIELD DIMENSIONS BEFORE ORDERING OR FABRICATING ANY MATERIAL.

DESIGN OVERSIGHT Jon Hamaguchi
6-24-09
SIGN OFF DATE

	BY	CHECKED
DESIGN	T. A. Kirilov	F. Sanchez
DETAILS	J. Saldana	H. Montoya
QUANTITIES	CC/CS/SM	VT/KC

PREPARED FOR THE STATE OF CALIFORNIA DEPARTMENT OF TRANSPORTATION

Romeo M. Firme
PROJECT ENGINEER

BRIDGE NO. 55-0460
POST MILE 17.1

PLACENTIA AVENUE UC (WIDEN)
BENT DETAILS NO.2

DESIGN DETAIL SHEET (ENGLISH) (REV. 2/25/05)

ORIGINAL SCALE IN INCHES FOR REDUCED PLANS 0 1 2 3

CU 12
EA 0F0311

DISREGARD PRINTS BEARING EARLIER REVISION DATES

REVISION DATES (PRELIMINARY STAGE ONLY) 2/13/09 4/06/09 6/17/09

SHEET 18 OF 42

FILE => 55-0460-h-b01dt02.dgn

USERNAME => rfrenord DATE PLOTTED => 17-DEC-2009 TIME PLOTTED => 05:41

DIST	COUNTY	ROUTE	POST MILES TOTAL PROJECT	SHEET No	TOTAL SHEETS
12	Ora	57	16.2/18.6	896	960

REGISTERED CIVIL ENGINEER — DATE 6-17-09

12-14-09
PLANS APPROVAL DATE

REGISTERED PROFESSIONAL ENGINEER — T.A. Kirilov — No. C67708 — Exp. 6/30/11 — CIVIL — STATE OF CALIFORNIA

The State of California or its officers or agents shall not be responsible for the accuracy or completeness of electronic copies of this plan sheet.

OCTA
550 S MAIN STREET
ORANGE, CA 92868

RBF CONSULTING
14725 ALTON PKWY
IRVINE, CA 92618

UTILITIES:

Relocated fiber optics lines, see "Miscellaneous Details" sheet.

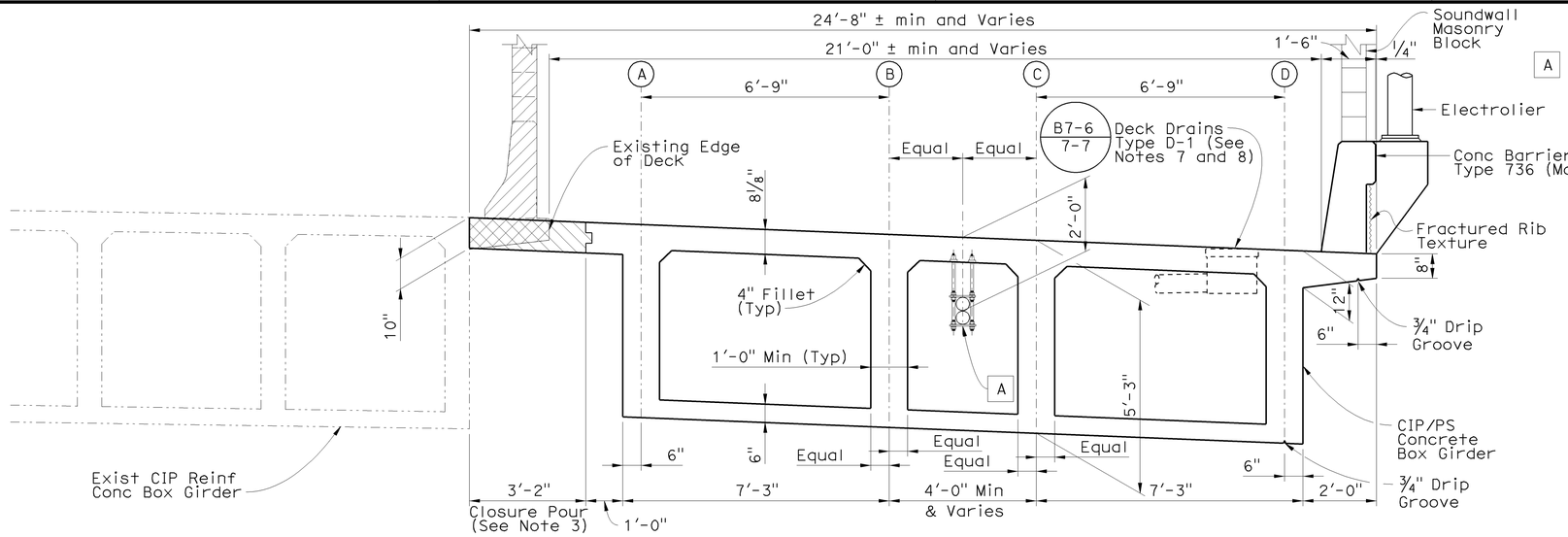

TYPICAL SECTION AT SPANS 1 & 4

1/2" = 1'-0"

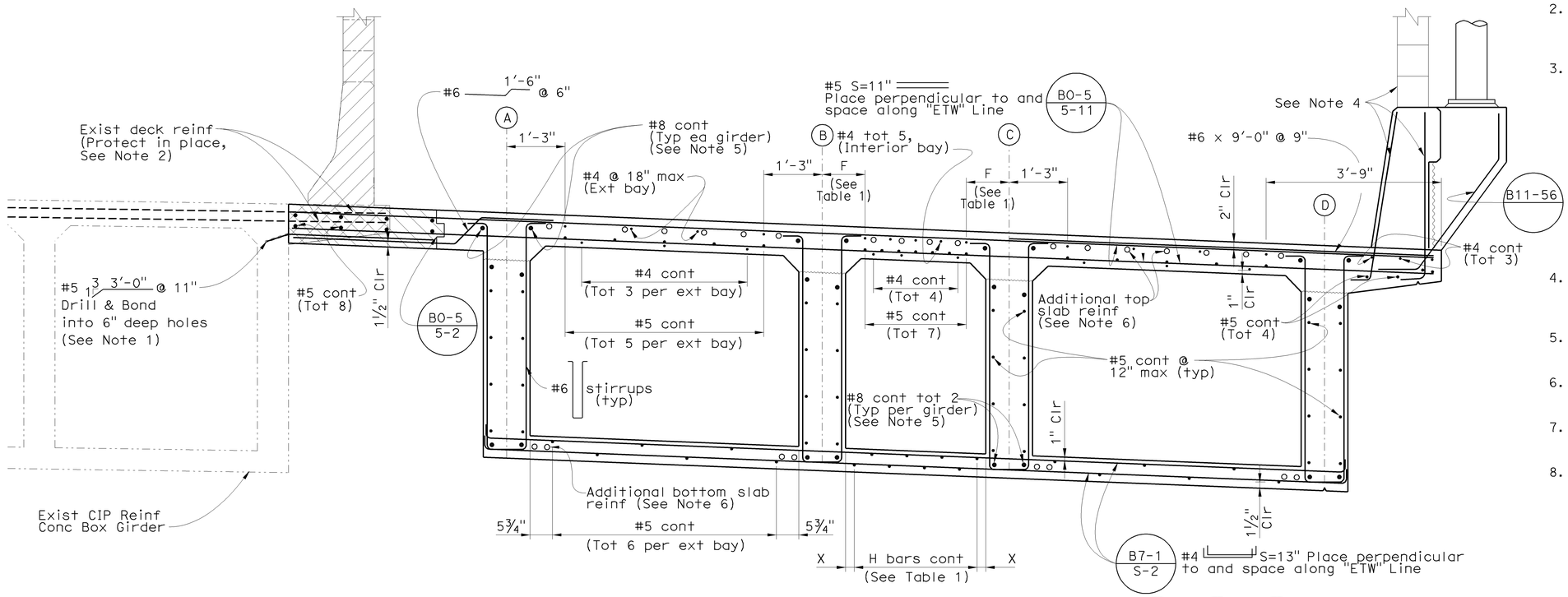

FULL TYPICAL SECTION AT SPANS 1 & 4

BB Sta 10+00.00 to Sta 10+85.46 "ETW" Line
Sta 13+04.58 to EB Sta 14+14.08 "ETW" Line
3/4" = 1'-0"

B0-5 B7-1 B8-5

LEGEND:

- Bridge Removal (Portion)
- Closure Pour
- Indicates additional slab reinf
- Indicates existing structure
- Indicates New Structure

NOTES:

1. Locate drill & bond dowels to clear existing reinf or stirrups.
2. Replace any damage exist transverse deck reinf with an additional #5 1 3/4 3'-0" drill & bond dowel into 6" deep hole.
3. Falsework Release:
   Alternative 1:
   Falsework shall be released as soon as permitted by the specifications. Closure pour shall not be placed sooner than 60 days after the falsework has been released.
   Alternative 2:
   Falsework shall not be released less than 28 days after the last concrete has been placed. Closure pour shall not be placed sooner than 14 days after the falsework has been released. When Falsework Alternative 2 is used, camber values are 0.75 times those shown.
4. For dowels & reinf in barrier see "Concrete Barrier Type 736 (Mod)" sheet. For SW reinf into barrier see "Soundwall-Masonry Block on Bridge" sheet.
5. Reinforcing shall be made continuous and meet "Service Splice" requirements.
6. For additional slab reinf, see "Additional Girder Reinforcement" sheet.
7. For deck reinf adjustment at deck drains, see "Miscellaneous Details" sheet.
8. For deck drain location and piping layout, see "Girder Layout No. 2" sheet.

TABLE 1			
Location	"F" Dim	"H" Bars	"X" Dim
Span 1	11"	#5 Tot 4	4 1/2"
Span 2	11"	-	-
Span 3	17"	-	-
Span 4	17"	#5 Tot 8	6"

NOTE:
THE CONTRACTOR SHALL VERIFY ALL CONTROLLING FIELD DIMENSIONS BEFORE ORDERING OR FABRICATING ANY MATERIAL.

DESIGN OVERSIGHT — Jon Hamaguchi
6-24-09
SIGN OFF DATE

	BY	CHECKED
DESIGN	T. A. Kirilov	F. Sanchez
DETAILS	J. Saldana	H. Montoya
QUANTITIES	CC/CS/SM	VT/KC

PREPARED FOR THE STATE OF CALIFORNIA DEPARTMENT OF TRANSPORTATION

Romeo M. Firme
PROJECT ENGINEER

BRIDGE NO. 55-0460
POST MILE 17.1

PLACENTIA AVENUE UC (WIDEN)
CIP/PS TYPICAL SECTION NO.1

DESIGN DETAIL SHEET (ENGLISH) (REV. 2/25/05)

ORIGINAL SCALE IN INCHES FOR REDUCED PLANS 0 1 2 3

CU 12
EA 0F0311

DISREGARD PRINTS BEARING EARLIER REVISION DATES — REVISION DATES (PRELIMINARY STAGE ONLY) 2/13/09 3/16/09 6/17/09

SHEET 19 OF 42

FILE => 55-0460-k-ts01.dgn

USERNAME => trlenard DATE PLOTTED => 17-DEC-2008 TIME PLOTTED => 06:41

DIST	COUNTY	ROUTE	POST MILES TOTAL PROJECT	SHEET No	TOTAL SHEETS
12	Ora	57	16.2/18.6	897	960

REGISTERED CIVIL ENGINEER — DATE 6-17-09

12-14-09
PLANS APPROVAL DATE

REGISTERED PROFESSIONAL ENGINEER — T.A. Kirilov No. C67708 Exp. 6/30/11 CIVIL — STATE OF CALIFORNIA

The State of California or its officers or agents shall not be responsible for the accuracy or completeness of electronic copies of this plan sheet.

OCTA
550 S MAIN STREET
ORANGE, CA 92868

RBF CONSULTING
14725 ALTON PKWY
IRVINE, CA 92618

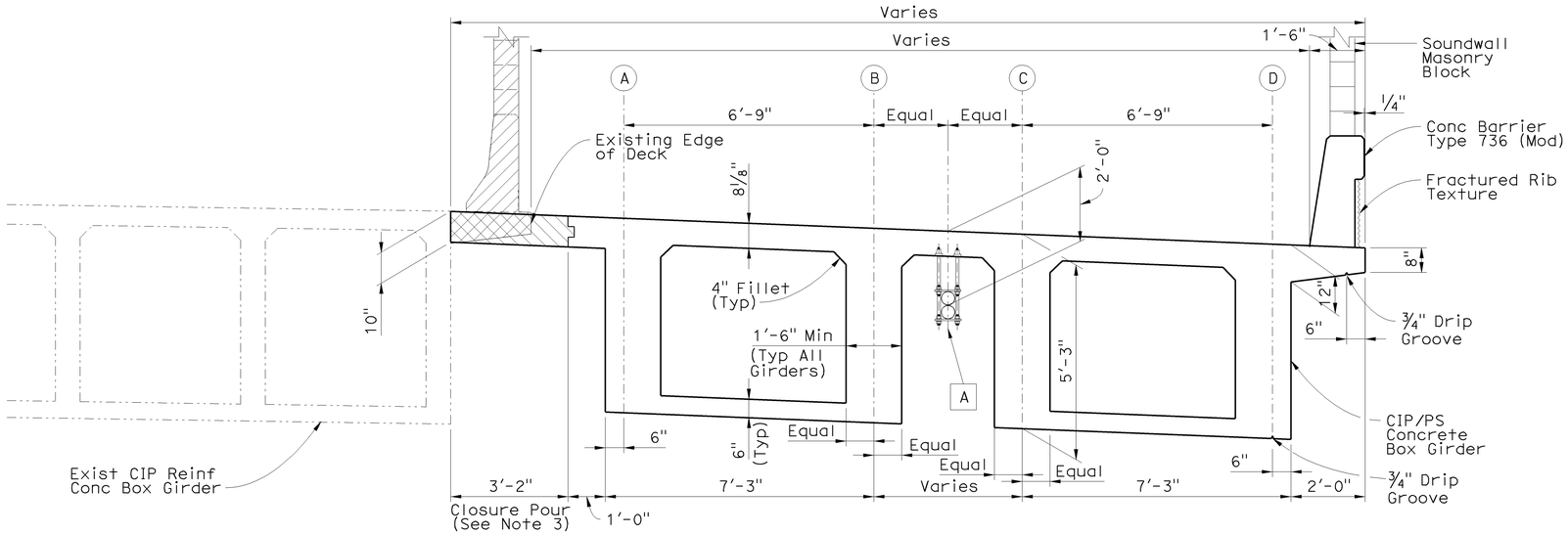

TYPICAL SECTION AT END OF SPANS 2 & 3

1/2" = 1'-0"

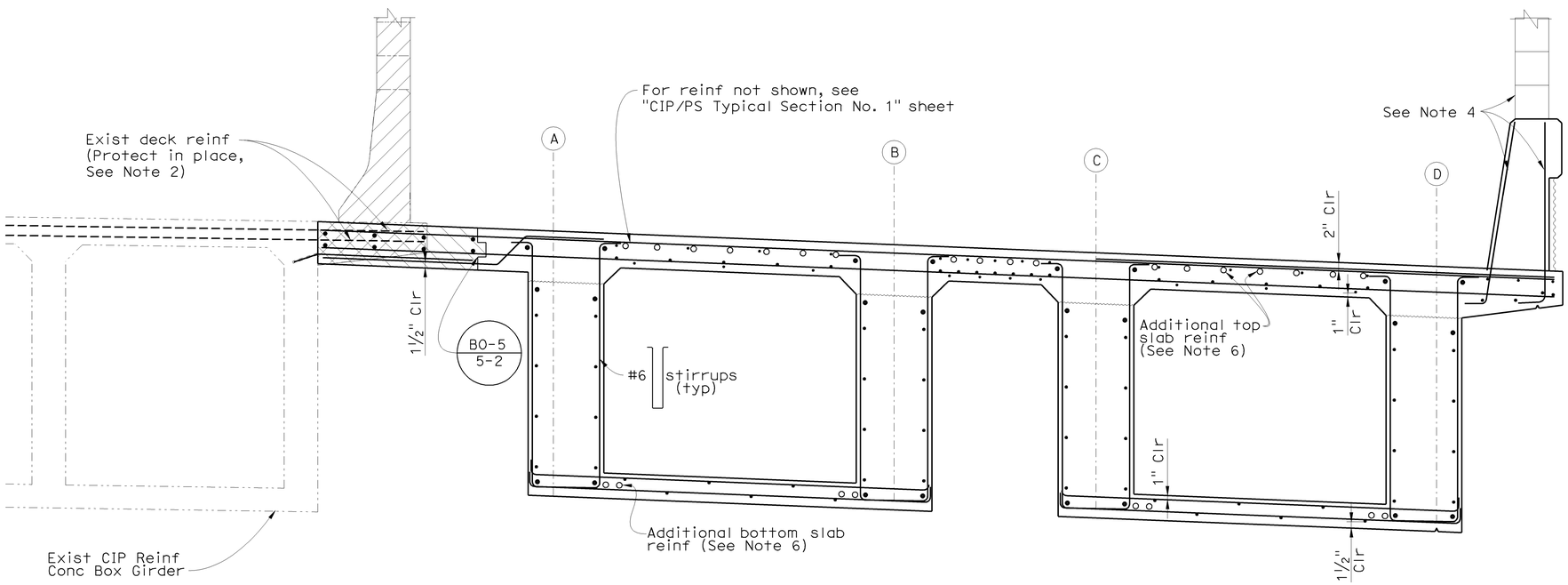

FULL TYPICAL SECTION AT END OF SPANS 2 & 3

B0-5 B7-1 B8-5

Sta 10+85.46 to Sta 10+92.63 "ETW" Line
Sta 11+68.72 to Sta 12+01.55 "ETW" Line
Sta 12+95.13 to Sta 13+04.58 "ETW" Line

3/4" = 1'-0"

UTILITIES:

A — Relocated fiber optics lines, see "Miscellaneous Details" sheet.

LEGEND:

- Bridge Removal (Portion)
- Closure Pour
- Indicates additional slab reinf
- Indicates existing structure
- Indicates New Construction

NOTES:

1. Locate drill & bond dowels to clear existing reinf or stirrups.
2. Replace any damage exist trgnsverse deck reinf with an additional #5 $1\frac{3}{3'-0"}$ drill & bond dowel into 6" deep hole.
3. Falsework Release:
   Alternative 1:
   Falsework shall be released as soon as permitted by the specifications. Closure pour shall not be placed sooner than 60 days after the falsework has been released.
   Alternative 2:
   Falsework shall not be released less than 28 days after the last concrete has been placed. Closure pour shall not be placed sooner than 14 days after the falsework has been released. When Falsework Alternative 2 is used, camber values are 0.75 times those shown.
4. For dowels & reinf in barrier see "Concrete Barrier Type 736 (Mod)" sheet. For SW reinf into barrier see "Soundwall-Masonry Block on Bridge" sheet.
5. Reinforcing shall be made continuous and meet "Service Splice" requirements.
6. For additional slab reinf, see "Additional Girder Reinforcement" sheet.

NOTE:
THE CONTRACTOR SHALL VERIFY ALL CONTROLLING FIELD DIMENSIONS BEFORE ORDERING OR FABRICATING ANY MATERIAL.

DESIGN OVERSIGHT — Jon Hamaguchi
6-24-09
SIGN OFF DATE

	BY	CHECKED
DESIGN	T. A. Kirilov	F. Sanchez
DETAILS	J. Saldana	H. Montoya
QUANTITIES	CC/CS/SM	VT/KC

PREPARED FOR THE STATE OF CALIFORNIA DEPARTMENT OF TRANSPORTATION

Romeo M. Firme
PROJECT ENGINEER

BRIDGE NO. 55-0460
POST MILE 17.1

PLACENTIA AVENUE UC (WIDEN)
CIP/PS TYPICAL SECTION NO. 2

DESIGN DETAIL SHEET (ENGLISH) (REV. 2/25/05)

ORIGINAL SCALE IN INCHES FOR REDUCED PLANS 0 1 2 3

CU 12
EA 0F0311

DISREGARD PRINTS BEARING EARLIER REVISION DATES

REVISION DATES (PRELIMINARY STAGE ONLY) 2/13/09 4/08/09 6/17/09

SHEET 20 OF 42

FILE => 55-0460-k-ts02.dgn

USERNAME => friehard DATE PLOTTED => 17-DEC-2009 TIME PLOTTED => 08:41

DIST	COUNTY	ROUTE	POST MILES TOTAL PROJECT	SHEET No	TOTAL SHEETS
12	Ora	57	16.2/18.6	898	960

REGISTERED CIVIL ENGINEER — DATE 6-17-09

12-14-09
PLANS APPROVAL DATE

REGISTERED PROFESSIONAL ENGINEER — T.A. Kirilov — No. C67708 — Exp. 6/30/11 — CIVIL — STATE OF CALIFORNIA

The State of California or its officers or agents shall not be responsible for the accuracy or completeness of electronic copies of this plan sheet.

OCTA
550 S MAIN STREET
ORANGE, CA 92868

RBF CONSULTING
14725 ALTON PKWY
IRVINE, CA 92618

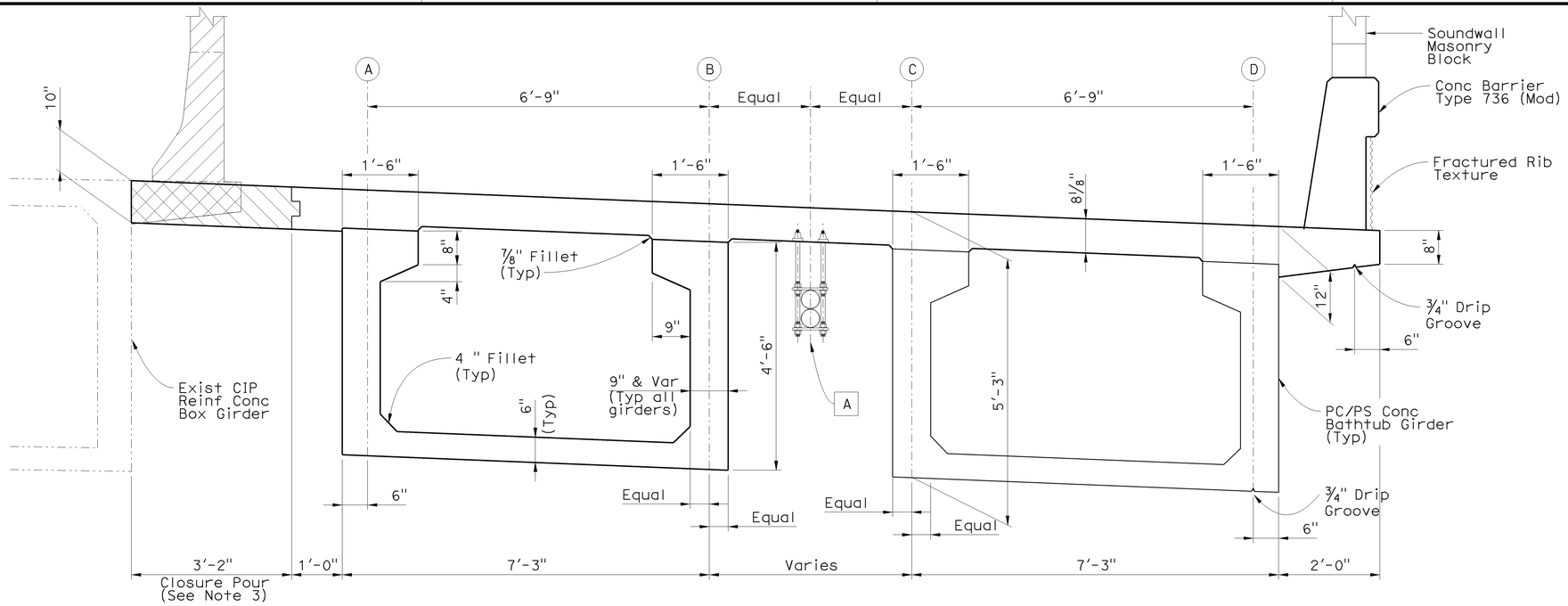

TYPICAL SECTION AT MIDSPAN OF SPANS 2 & 3

3/4" = 1'-0"

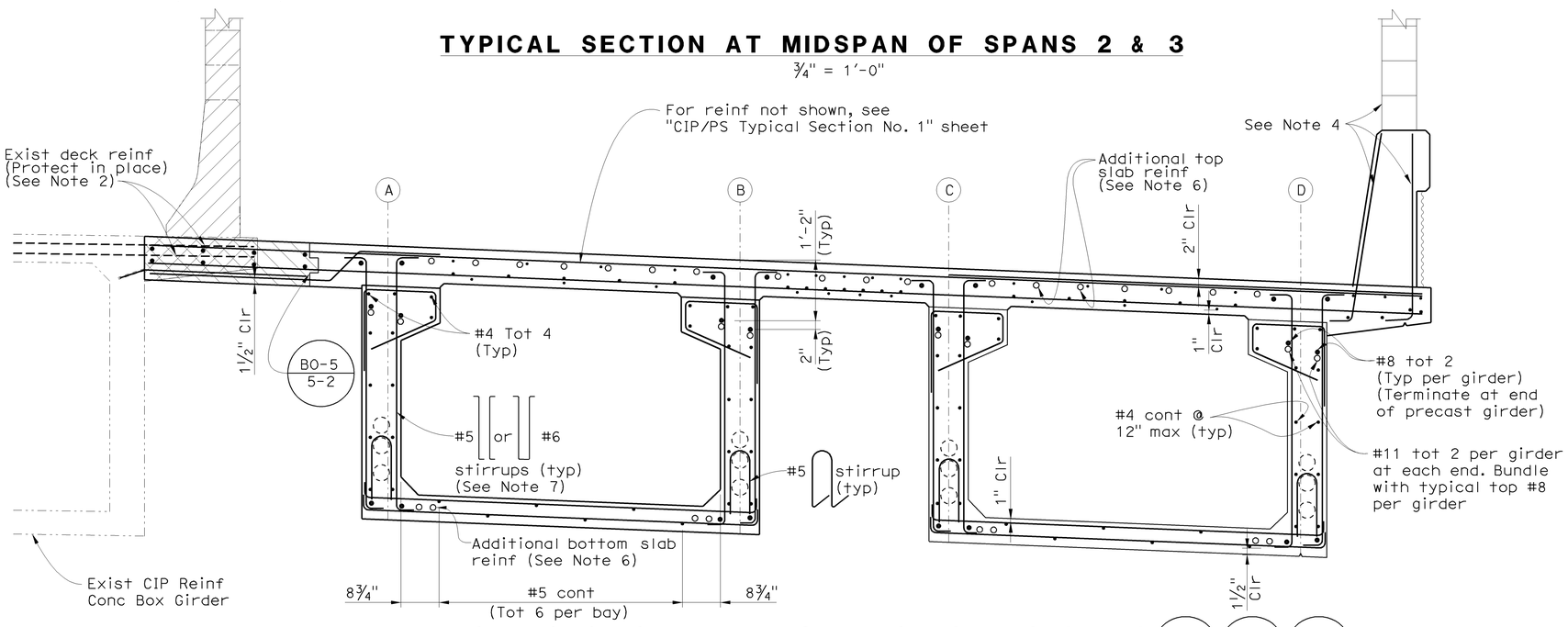

FULL TYPICAL SECTION AT MIDSPAN OF SPANS 2 & 3

B0-5 | B7-1 | B8-5

Sta 10+92.63 to Sta 11+68.72 "ETW" Line
Sta 12+01.55 to Sta 12+95.13 "ETW" Line

3/4" = 1'-0"

NOTE:
THE CONTRACTOR SHALL VERIFY ALL CONTROLLING FIELD DIMENSIONS BEFORE ORDERING OR FABRICATING ANY MATERIAL.

UTILITIES:

A — Relocated fiber optics lines, see "Miscellaneous Details" sheet.

LEGEND:

- Bridge Removal (Portion)
- Closure Pour
- Indicates additional slab reinf
- Indicates existing structure
- Indicates New Construction

NOTES:

1. Locate drill & bond dowels to clear existing reinf or stirrups.
2. Replace any damage exist transverse deck reinf with an additional #5 1 3/3'-0" drill & bond dowel into 6" deep hole.
3. Falsework Release:
   Alternative 1:
   Falsework shall be released as soon as permitted by the specifications. Closure pour shall not be placed sooner than 60 days after the falsework has been released.
   Alternative 2:
   Falsework shall not be released less than 28 days after the last concrete has been placed. Closure pour shall not be placed sooner than 14 days after the falsework has been released. When Falsework Alternative 2 is used, camber values are 0.75 times those shown.
4. For dowels & reinf in barrier see "Concrete Barrier Type 736 (Mod)" sheet. For SW reinf into barrier see "Soundwall-Masonry Block on Bridge" sheet.
5. Reinforcing shall be made continuous and meet "Service Splice" requirements.
6. For additional slab reinf, see "Additional Girder Reinforcement" sheet.
7. For stirrup location and sizes, see "PC/PS Girder Details No. 2" sheet.

DESIGN OVERSIGHT — Jon Hamaguchi
6-24-09
SIGN OFF DATE

DESIGN	BY T. A. Kirilov	CHECKED F. Sanchez	
DETAILS	BY J. Saldana	CHECKED H. Montoya	
QUANTITIES	BY CC/CS/SM	CHECKED VT/KC	

PREPARED FOR THE STATE OF CALIFORNIA DEPARTMENT OF TRANSPORTATION

Romeo M. Firme
PROJECT ENGINEER

BRIDGE NO. 55-0460
POST MILE 17.1

PLACENTIA AVENUE UC (WIDEN)
PC/PS TYPICAL SECTION

DESIGN DETAIL SHEET (ENGLISH) (REV. 2/25/05)

ORIGINAL SCALE IN INCHES FOR REDUCED PLANS 0 1 2 3

CU 12
EA 0F0311

DISREGARD PRINTS BEARING EARLIER REVISION DATES

REVISION DATES (PRELIMINARY STAGE ONLY) 2/13/09 4/06/09 6/17/09

SHEET 21 OF 42

FILE => 55-0460-k-ts03.dgn

USERNAME => rfriend DATE PLOTTED => 17-DEC-2009 TIME PLOTTED => 05:41

DIST	COUNTY	ROUTE	POST MILES TOTAL PROJECT	SHEET No	TOTAL SHEETS
12	Ora	57	16.2/18.6	899	960

REGISTERED CIVIL ENGINEER — DATE 6-17-09

12-14-09
PLANS APPROVAL DATE

The State of California or its officers or agents shall not be responsible for the accuracy or completeness of electronic copies of this plan sheet.

REGISTERED PROFESSIONAL ENGINEER — T.A. Kirilov No. C67708 Exp. 6/30/11 CIVIL — STATE OF CALIFORNIA

OCTA
550 S MAIN STREET
ORANGE, CA 92868

RBF CONSULTING
14725 ALTON PKWY
IRVINE, CA 92618

℄ GIRDER/EDGE OF DECK CURVE DATA

No.	R	Δ	T	L
1	1,800.00′	08°22′58"	131.913′	263.355′
2	1,802.50′	08°22′58"	113.443′	226.587′
3	1,809.25′	08°22′58"	132.591′	264.708′
4	1,784.25′	08°33′58"	133.626′	266.754′
5	1,791.00′	07°57′20"	124.541′	248.682′
6	3,381.50′	01°33′09"	45.813′	90.301′
7	3,384.00′	01°27′12"	42.920′	85.836′
8	3,390.75′	01°06′15"	32.677′	65.352′

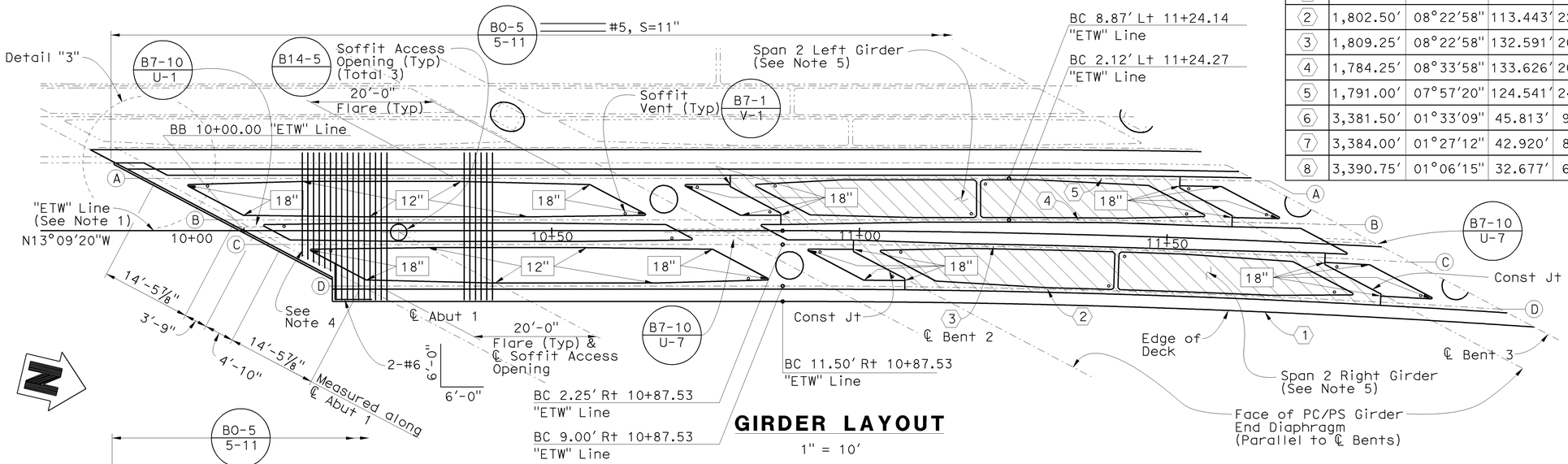

GIRDER LAYOUT

1" = 10′

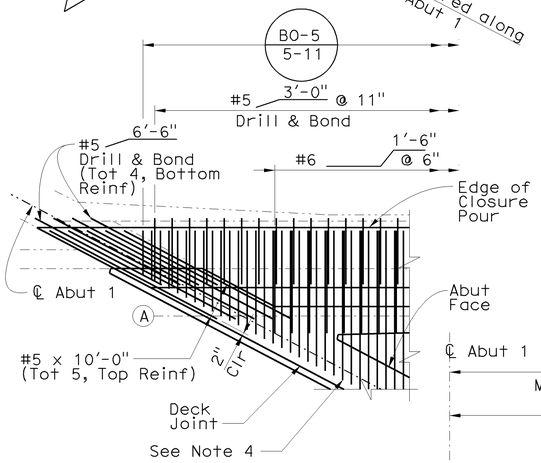

DETAIL "3"

¼" = 1′-0"

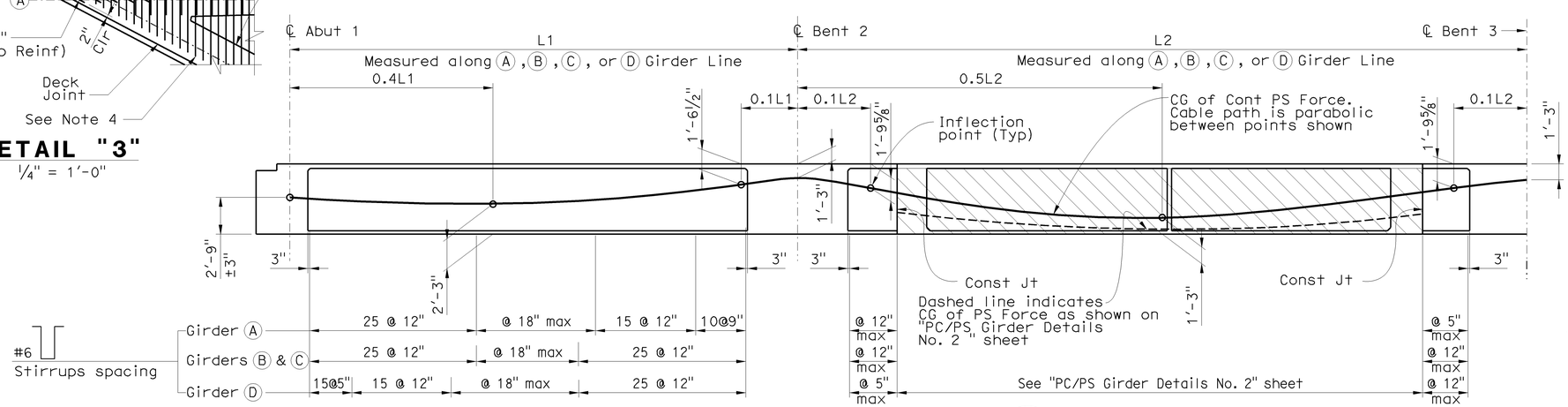

LONGITUDINAL SECTION

No Scale

B8-5

NOTES:

1. For "ETW" Line layout information, see "General Plan" sheet.
2. Length of curves 4 & 5 is measured from BC to ℄ Abut 5.
3. Curves 2 & 3 are concentric with "ETW" Line.
4. Extend top reinforcing 2′-0" min into Abut Diaphragm. Terminate bottom reinforcing 3" from face of Abut Diaphragm.
5. For precast girder dimensions, see "PC/PS Girder Details No. 1" sheet.
6. For point of no movement, see "Girder Layout No. 2" sheet.
7. All acute corners shall be chamfered 4" min.

CONT PRESTRESSING NOTES:

270 ksi Low Relaxation Strand:
Pjack = 3960 kips
Total Number of Girders = 3 (Girders A , B & C)
Pjack = 1496 kips
Total Number of Girders = 1 (Girder D)
Anchor Set = ⅜ inch
Concrete: f′c = 5.0 ksi @ 28 days
f′ci = 4.2 ksi @ time of stressing
Contractor shall submit elongation calculations based on initial stress at ⊠ = 0.953 times jacking stress. Two-end stressing shall be performed.
Design is based on friction curvature.

LEGEND:

- XX — Indicates girder stem width
- Indicates Precast Girders
- Indicates Existing Structure
- Indicates New Construction
- Indicates Soffit Vent
- Indicates Soffit Access Opening

NOTE:
THE CONTRACTOR SHALL VERIFY ALL CONTROLLING FIELD DIMENSIONS BEFORE ORDERING OR FABRICATING ANY MATERIAL.

DESIGN OVERSIGHT — Jon Hamaguchi
6-24-09
SIGN OFF DATE

	BY	CHECKED
DESIGN	T. A. Kirilov	F. Sanchez
DETAILS	J. Saldana	H. Montoya
QUANTITIES	CC/CS/SM	VT/KC

PREPARED FOR THE STATE OF CALIFORNIA DEPARTMENT OF TRANSPORTATION

Romeo M. Firme
PROJECT ENGINEER

BRIDGE NO. 55-0460
POST MILE 17.1

PLACENTIA AVENUE UC (WIDEN)
GIRDER LAYOUT NO.1

DESIGN DETAIL SHEET (ENGLISH) (REV. 2/25/05)

ORIGINAL SCALE IN INCHES FOR REDUCED PLANS 0 1 2 3

CU 12
EA 0F0311

DISREGARD PRINTS BEARING EARLIER REVISION DATES
REVISION DATES (PRELIMINARY STAGE ONLY) 2/23/09 3/16/09 6/17/09

SHEET 22 OF 42

FILE => 55-0460-1-g_1o01.dgn

USERNAME => trlenard DATE PLOTTED => 17-DEC-2009 TIME PLOTTED => 06:41

DIST	COUNTY	ROUTE	POST MILES TOTAL PROJECT	SHEET No	TOTAL SHEETS
12	Ora	57	16.2/18.6	900	960

REGISTERED CIVIL ENGINEER — DATE 6-17-09

12-14-09
PLANS APPROVAL DATE

REGISTERED PROFESSIONAL ENGINEER — T.A. Kirilov — No. C67708 — Exp. 6/30/11 — CIVIL — STATE OF CALIFORNIA

The State of California or its officers or agents shall not be responsible for the accuracy or completeness of electronic copies of this plan sheet.

OCTA
550 S MAIN STREET
ORANGE, CA 92868

RBF CONSULTING
14725 ALTON PKWY
IRVINE, CA 92618

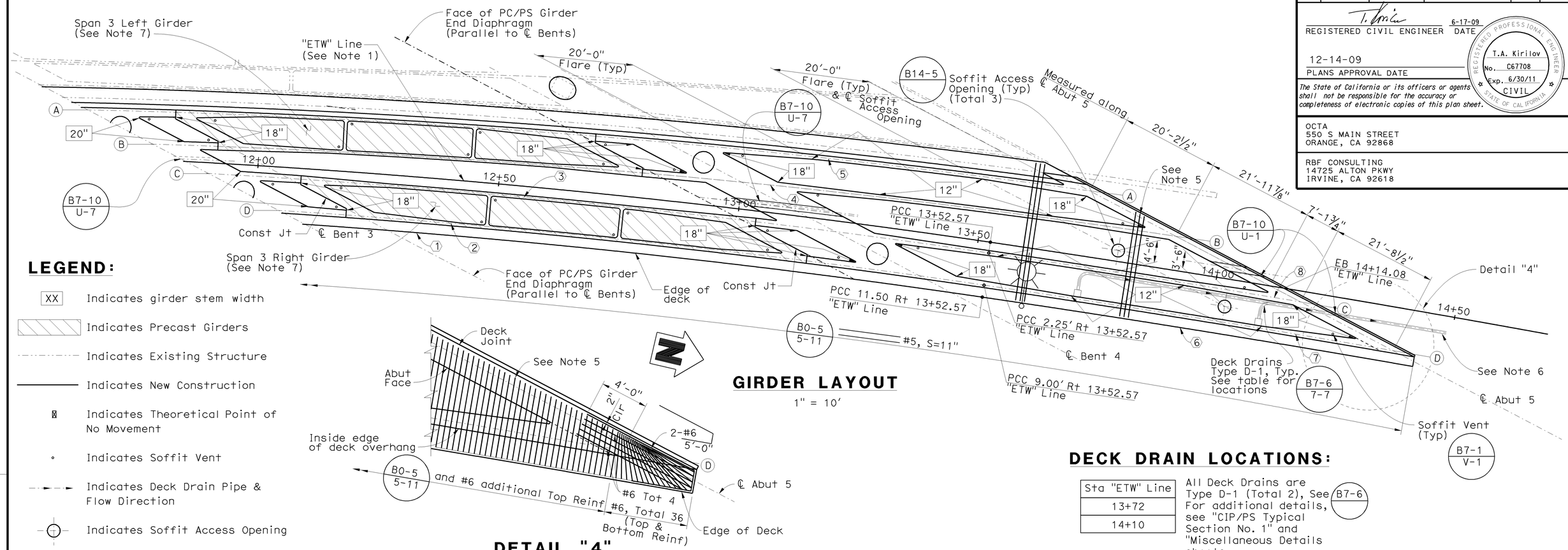

GIRDER LAYOUT

1" = 10'

LEGEND:

- XX — Indicates girder stem width
- Indicates Precast Girders
- Indicates Existing Structure
- Indicates New Construction
- Indicates Theoretical Point of No Movement
- Indicates Soffit Vent
- Indicates Deck Drain Pipe & Flow Direction
- Indicates Soffit Access Opening

DETAIL "4"

¼" = 1'-0"

DECK DRAIN LOCATIONS:

Sta "ETW" Line
13+72
14+10

All Deck Drains are Type D-1 (Total 2), See B7-6 For additional details, see "CIP/PS Typical Section No. 1" and "Miscellaneous Details sheets.

NOTES:

1. For "ETW" Line layout information, see "General Plan" sheet.
2. For Prestressing Notes and Curve Data table, see "Girder Layout No. 1" sheet.
3. Curves ②, ③, ⑦, & ⑧ are concentric with "ETW".
4. Length of curves ④, ⑤, ⑦, & ⑧ is measured from BC to ℄ Abut 5.
5. Extend top reinforcing 2'-0" min into abut diaphragm. Terminate bottom reinforcing 3" from face of abut diaphragm.
6. Connect to storm drain system per Drainage Plans.
7. For precast girder dimensions, see "PC/PS Girder Details No 1" sheet.
8. All acute corners shall be chamfered 4" min.

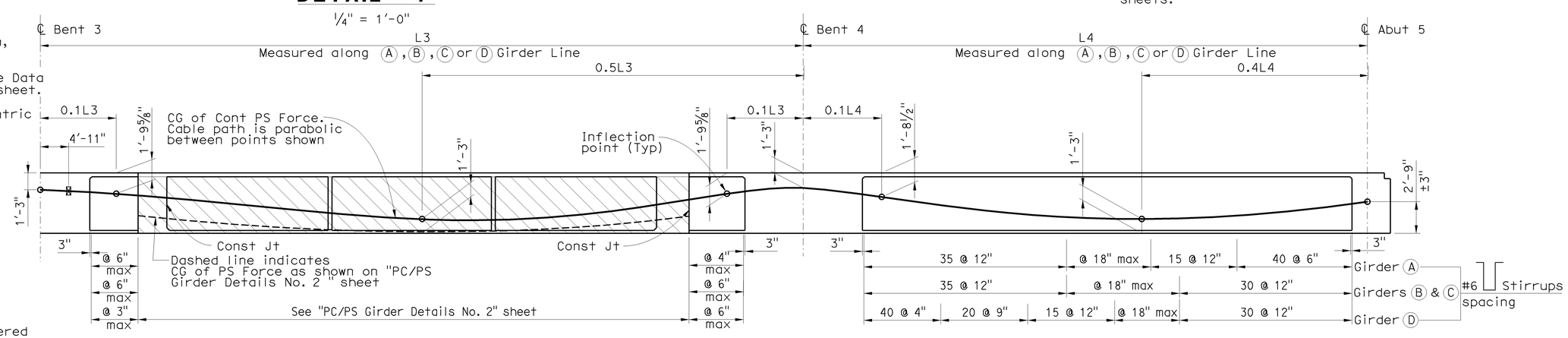

LONGITUDINAL SECTION B8-5

No Scale

NOTE:
THE CONTRACTOR SHALL VERIFY ALL CONTROLLING FIELD DIMENSIONS BEFORE ORDERING OR FABRICATING ANY MATERIAL.

DESIGN OVERSIGHT — Jon Hamaguchi
6-24-09
SIGN OFF DATE

	BY	CHECKED
DESIGN	T. A. Kirilov	F. Sanchez
DETAILS	J. Saldana	H. Montoya
QUANTITIES	CC/CS/SM	VT/KC

PREPARED FOR THE STATE OF CALIFORNIA DEPARTMENT OF TRANSPORTATION

Romeo M. Firme
PROJECT ENGINEER

BRIDGE NO. 55-0460
POST MILE 17.1

PLACENTIA AVENUE UC (WIDEN)
GIRDER LAYOUT NO.2

DESIGN DETAIL SHEET (ENGLISH) (REV. 2/25/05)

ORIGINAL SCALE IN INCHES FOR REDUCED PLANS 0 1 2 3

CU 12
EA 0F0311

DISREGARD PRINTS BEARING EARLIER REVISION DATES

REVISION DATES (PRELIMINARY STAGE ONLY): 2/13/09 4/6/09 6/17/09

SHEET 23 OF 42

FILE => 55-0460-1-g_1o02.dgn

USERNAME => trihard DATE PLOTTED => 17-DEC-2009 TIME PLOTTED => 05:41