Dist	COUNTY	ROUTE	POST MILES TOTAL PROJECT	SHEET No.	TOTAL SHEETS
12	Ora	57	18.4/20.9	101	856

Mark Fricke — 11-16-09
REGISTERED CIVIL ENGINEER — DATE

1-25-10
PLANS APPROVAL DATE

REGISTERED PROFESSIONAL ENGINEER — MARK FRICKE — No. C45703 — Exp. 12-31-10 — CIVIL — STATE OF CALIFORNIA

THE STATE OF CALIFORNIA OR ITS OFFICERS OR AGENTS SHALL NOT BE RESPONSIBLE FOR THE ACCURACY OR COMPLETENESS OF SCANNED COPIES OF THIS PLAN SHEET.

CH2M HILL
6 HUTTON CENTRE DRIVE,
SUITE 700
SANTA ANA, CA 92707

OCTA
550 S. MAIN STREET
ORANGE, CA 92863

NOTE:

1. FOR COMPLETE R/W AND ACCURATE ACCESS DATA, SEE R/W RECORD MAPS AT DISTRICT OFFICE.

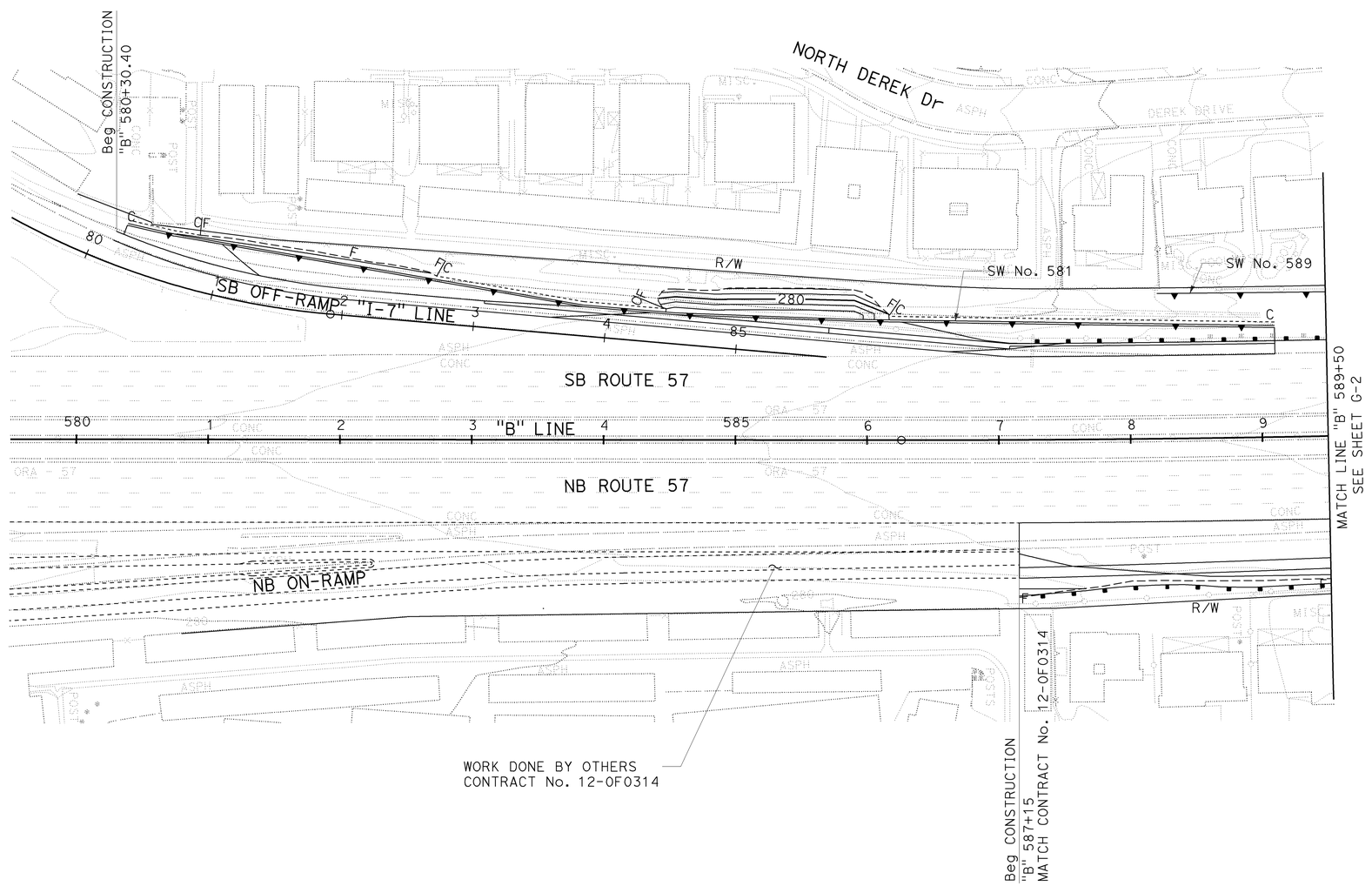

THIS PLAN ACCURATE FOR CONTOUR GRADING WORK ONLY

CONTOUR GRADING PLAN

SCALE: 1" = 50'

G-1

REVISED BY | DATE REVISED
RYAN MITRY | MARK FRICKE
CALCULATED-DESIGNED BY | CHECKED BY
CONSULTANT FUNCTIONAL SUPERVISOR: THOMAS IONTA
STATE OF CALIFORNIA - DEPARTMENT OF TRANSPORTATION
Caltrans

LAST REVISION | DATE PLOTTED => 25-JAN-2010
00-00-00 | TIME PLOTTED => 11:09

BORDER LAST REVISED 4/11/2008

RELATIVE BORDER SCALE IS IN INCHES 0 1 2 3

USERNAME => trpierce
DGN FILE => c0F032ha001.dgn

CU 12220

EA 0F0321

Dist	COUNTY	ROUTE	POST MILES TOTAL PROJECT	SHEET No.	TOTAL SHEETS
12	Ora	57	18.4/20.9	102	856

Mark Fricke — REGISTERED CIVIL ENGINEER — 06-15-09 DATE

1-25-10
PLANS APPROVAL DATE

REGISTERED PROFESSIONAL ENGINEER — MARK FRICKE — No. C45703 — Exp. 12-31-10 — CIVIL — STATE OF CALIFORNIA

THE STATE OF CALIFORNIA OR ITS OFFICERS OR AGENTS SHALL NOT BE RESPONSIBLE FOR THE ACCURACY OR COMPLETENESS OF SCANNED COPIES OF THIS PLAN SHEET.

CH2M HILL
6 HUTTON CENTRE DRIVE,
SUITE 700
SANTA ANA, CA 92707

OCTA
550 S. MAIN STREET
ORANGE, CA 92863

NOTE:

1. FOR COMPLETE R/W AND ACCURATE ACCESS DATA, SEE R/W RECORD MAPS AT DISTRICT OFFICE.

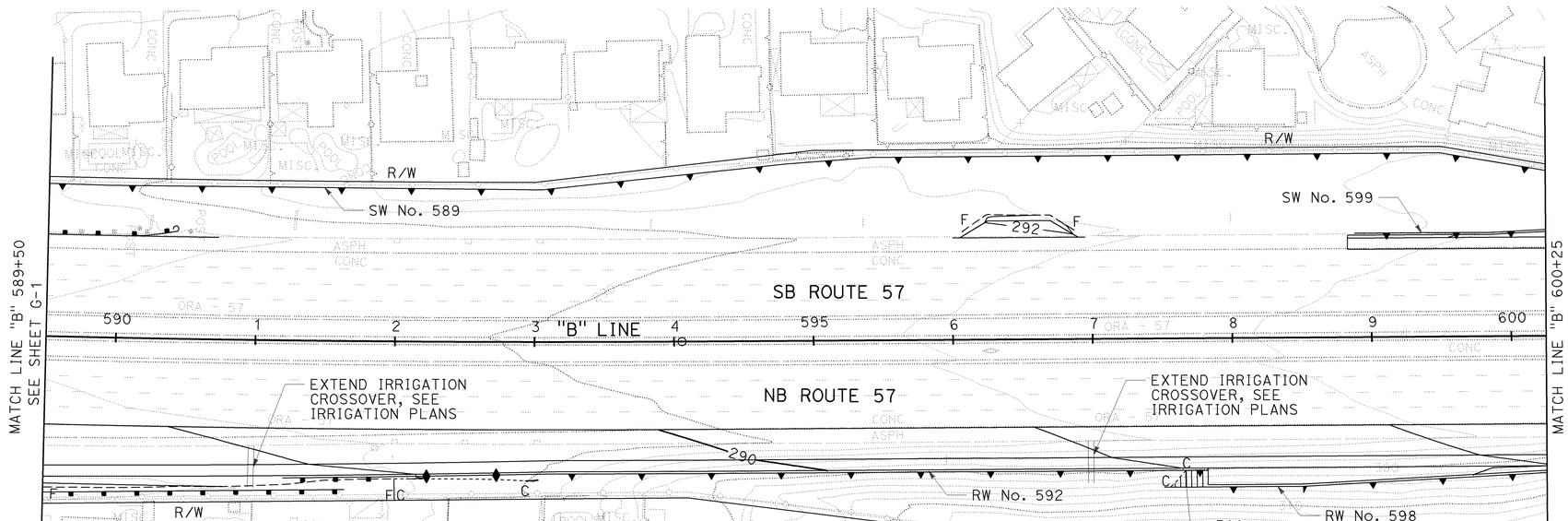

THIS PLAN ACCURATE FOR CONTOUR GRADING WORK ONLY

CONTOUR GRADING PLAN

SCALE: 1" = 50'

G-2

REVISED BY | DATE REVISED
RYAN MITRY | MARK FRICKE
CALCULATED-DESIGNED BY | CHECKED BY
CONSULTANT FUNCTIONAL SUPERVISOR: THOMAS IONTA
STATE OF CALIFORNIA - DEPARTMENT OF TRANSPORTATION
Caltrans

LAST REVISION: 00-00-00 | DATE PLOTTED => 25-JAN-2010 | TIME PLOTTED => 11:01

BORDER LAST REVISED 4/11/2008 | RELATIVE BORDER SCALE IS IN INCHES 0 1 2 3 | USERNAME => trpierce | DGN FILE => c0F032ha002.dgn | CU 12220 | EA 0F0321

NOTE:

1. FOR COMPLETE R/W AND ACCURATE ACCESS DATA, SEE R/W RECORD MAPS AT DISTRICT OFFICE.

Dist	COUNTY	ROUTE	POST MILES TOTAL PROJECT	SHEET No.	TOTAL SHEETS
12	Ora	57	18.4/20.9	103	856

Mark Fricke 06-15-09
REGISTERED CIVIL ENGINEER DATE

1-25-10
PLANS APPROVAL DATE

REGISTERED PROFESSIONAL ENGINEER
MARK FRICKE
No. C45703
Exp. 12-31-10
CIVIL
STATE OF CALIFORNIA

THE STATE OF CALIFORNIA OR ITS OFFICERS OR AGENTS SHALL NOT BE RESPONSIBLE FOR THE ACCURACY OR COMPLETENESS OF SCANNED COPIES OF THIS PLAN SHEET.

CH2M HILL
6 HUTTON CENTRE DRIVE,
SUITE 700
SANTA ANA, CA 92707

OCTA
550 S. MAIN STREET
ORANGE, CA 92863

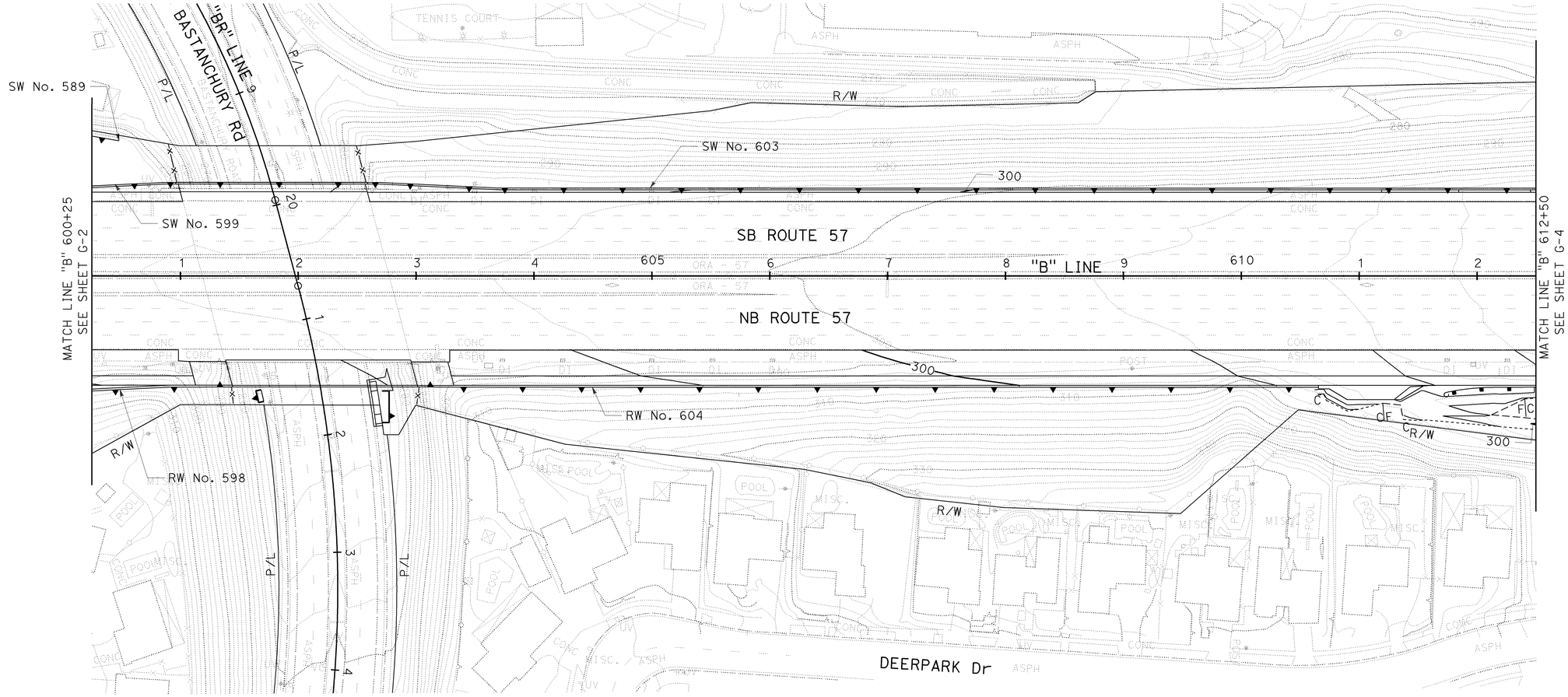

THIS PLAN ACCURATE FOR CONTOUR GRADING WORK ONLY

CONTOUR GRADING PLAN

SCALE: 1" = 50'

G-3

REVISED BY | DATE REVISED
RYAN MITRY | MARK FRICKE
CALCULATED-DESIGNED BY | CHECKED BY
THOMAS IONTA
CONSULTANT FUNCTIONAL SUPERVISOR
STATE OF CALIFORNIA - DEPARTMENT OF TRANSPORTATION
Caltrans

LAST REVISION 00-00-00 | DATE PLOTTED => 25-JAN-2010 | TIME PLOTTED => 11:10

BORDER LAST REVISED 4/11/2008
RELATIVE BORDER SCALE IS IN INCHES 0 1 2 3
USERNAME => trpierce
DGN FILE => c0F032ha003.dgn
CU 12220
EA 0F0321

Dist	COUNTY	ROUTE	POST MILES TOTAL PROJECT	SHEET No.	TOTAL SHEETS
12	Ora	57	18.4/20.9	104	856

Mark Fricke — REGISTERED CIVIL ENGINEER — 11-16-09 DATE

1-25-10 PLANS APPROVAL DATE

REGISTERED PROFESSIONAL ENGINEER — MARK FRICKE — No. C45703 — Exp. 12-31-10 — CIVIL — STATE OF CALIFORNIA

THE STATE OF CALIFORNIA OR ITS OFFICERS OR AGENTS SHALL NOT BE RESPONSIBLE FOR THE ACCURACY OR COMPLETENESS OF SCANNED COPIES OF THIS PLAN SHEET.

CH2M HILL
6 HUTTON CENTRE DRIVE,
SUITE 700
SANTA ANA, CA 92707

OCTA
550 S. MAIN STREET
ORANGE, CA 92863

NOTE:

1. FOR COMPLETE R/W AND ACCURATE ACCESS DATA, SEE R/W RECORD MAPS AT DISTRICT OFFICE.

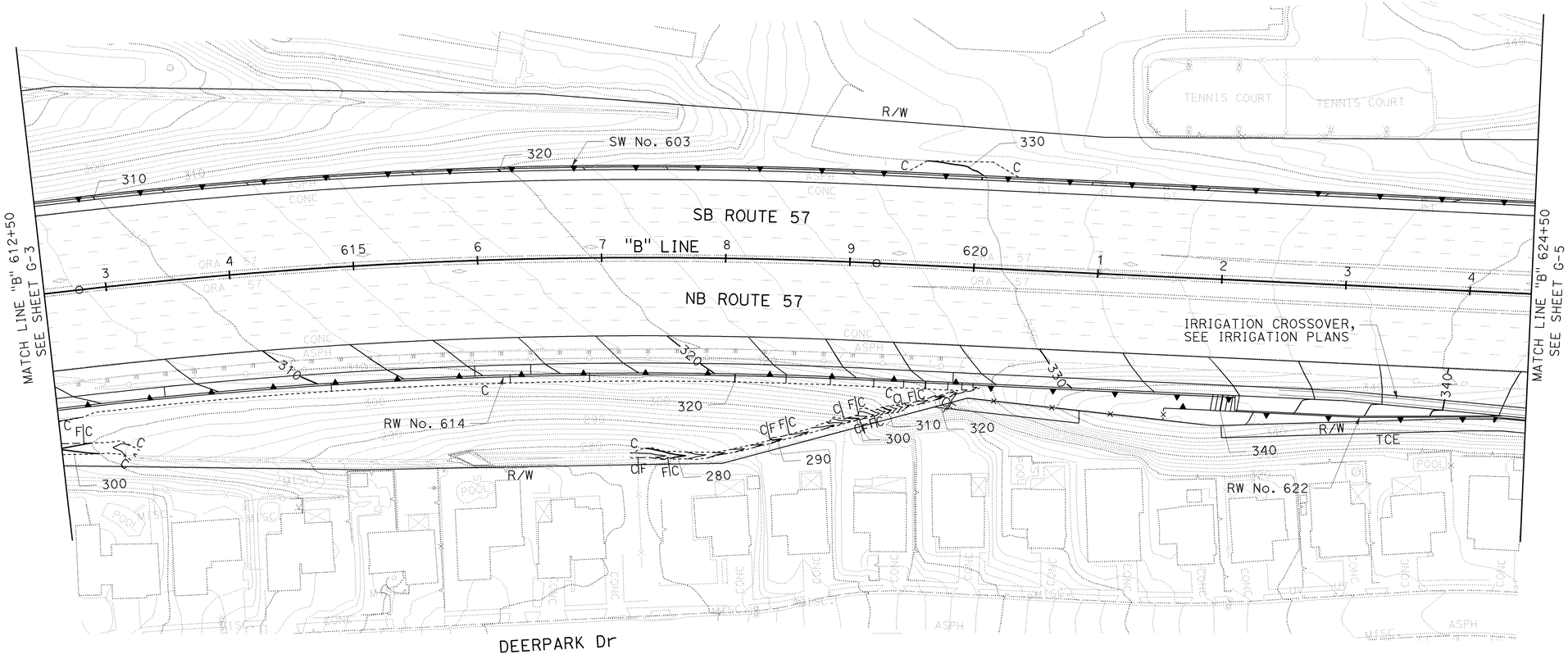

THIS PLAN ACCURATE FOR CONTOUR GRADING WORK ONLY

CONTOUR GRADING PLAN

SCALE: 1" = 50'

G-4

STATE OF CALIFORNIA - DEPARTMENT OF TRANSPORTATION

Caltrans

CONSULTANT FUNCTIONAL SUPERVISOR: THOMAS IONTA

CALCULATED-DESIGNED BY: RYAN MITRY

CHECKED BY: MARK FRICKE

REVISED BY | DATE REVISED

LAST REVISION | DATE PLOTTED => 25-JAN-2010
00-00-00 | TIME PLOTTED => 11:10

BORDER LAST REVISED 4/11/2008

RELATIVE BORDER SCALE IS IN INCHES 0 1 2 3

USERNAME => trpierce
DGN FILE => c0F032ha004.dgn

CU 12220

EA 0F0321

Dist	COUNTY	ROUTE	POST MILES TOTAL PROJECT	SHEET No.	TOTAL SHEETS
12	Ora	57	18.4/20.9	105	856

Mark Fricke 06-15-09
REGISTERED CIVIL ENGINEER DATE

1-25-10
PLANS APPROVAL DATE

REGISTERED PROFESSIONAL ENGINEER
MARK FRICKE
No. C45703
Exp. 12-31-10
CIVIL
STATE OF CALIFORNIA

THE STATE OF CALIFORNIA OR ITS OFFICERS OR AGENTS SHALL NOT BE RESPONSIBLE FOR THE ACCURACY OR COMPLETENESS OF SCANNED COPIES OF THIS PLAN SHEET.

CH2M HILL
6 HUTTON CENTRE DRIVE,
SUITE 700
SANTA ANA, CA 92707

OCTA
550 S. MAIN STREET
ORANGE, CA 92863

NOTE:

1. FOR COMPLETE R/W AND ACCURATE ACCESS DATA, SEE R/W RECORD MAPS AT DISTRICT OFFICE.

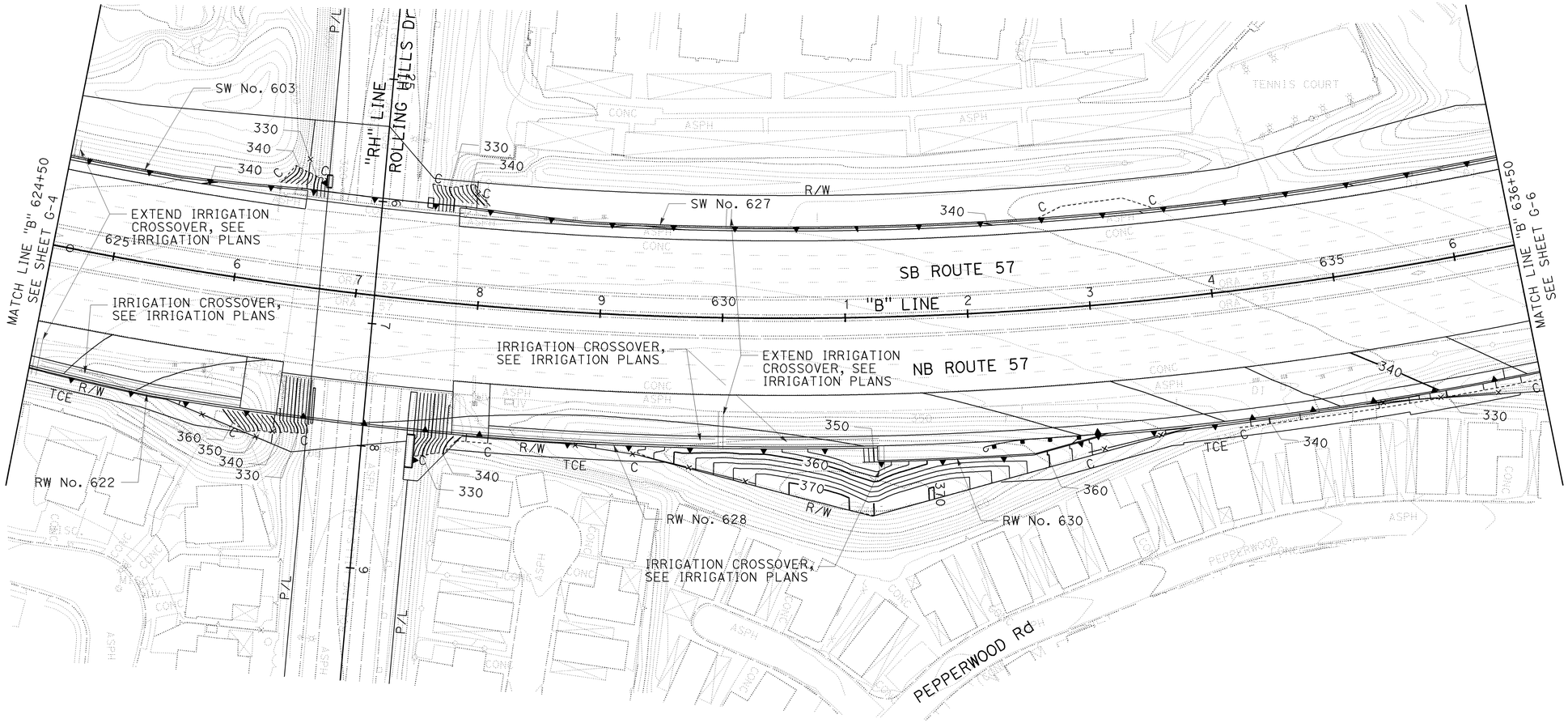

THIS PLAN ACCURATE FOR CONTOUR GRADING WORK ONLY

CONTOUR GRADING PLAN

SCALE: 1" = 50'

G-5

STATE OF CALIFORNIA - DEPARTMENT OF TRANSPORTATION
Caltrans
CONSULTANT FUNCTIONAL SUPERVISOR: THOMAS IONTA
CALCULATED-DESIGNED BY
CHECKED BY: MARK FRICKE
REVISED BY: RYAN MITRY
DATE REVISED

LAST REVISION | DATE PLOTTED => 25-JAN-2010
00-00-00 | TIME PLOTTED => 11:10

BORDER LAST REVISED 4/11/2008

RELATIVE BORDER SCALE IS IN INCHES 0 1 2 3

USERNAME => trpierce
DGN FILE => c0F032ha005.dgn

CU 12220

EA 0F0321

NOTES:

1. FOR COMPLETE R/W AND ACCURATE ACCESS DATA, SEE R/W RECORD MAPS AT DISTRICT OFFICE.

Dist	COUNTY	ROUTE	POST MILES TOTAL PROJECT	SHEET No.	TOTAL SHEETS
12	Ora	57	18.4/20.9	106	856

Mark Fricke 06-15-09
REGISTERED CIVIL ENGINEER DATE

1-25-10
PLANS APPROVAL DATE

REGISTERED PROFESSIONAL ENGINEER
MARK FRICKE
No. C45703
Exp. 12-31-10
CIVIL
STATE OF CALIFORNIA

THE STATE OF CALIFORNIA OR ITS OFFICERS OR AGENTS SHALL NOT BE RESPONSIBLE FOR THE ACCURACY OR COMPLETENESS OF SCANNED COPIES OF THIS PLAN SHEET.

CH2M HILL
6 HUTTON CENTRE DRIVE,
SUITE 700
SANTA ANA, CA 92707

OCTA
550 S. MAIN STREET
ORANGE, CA 92863

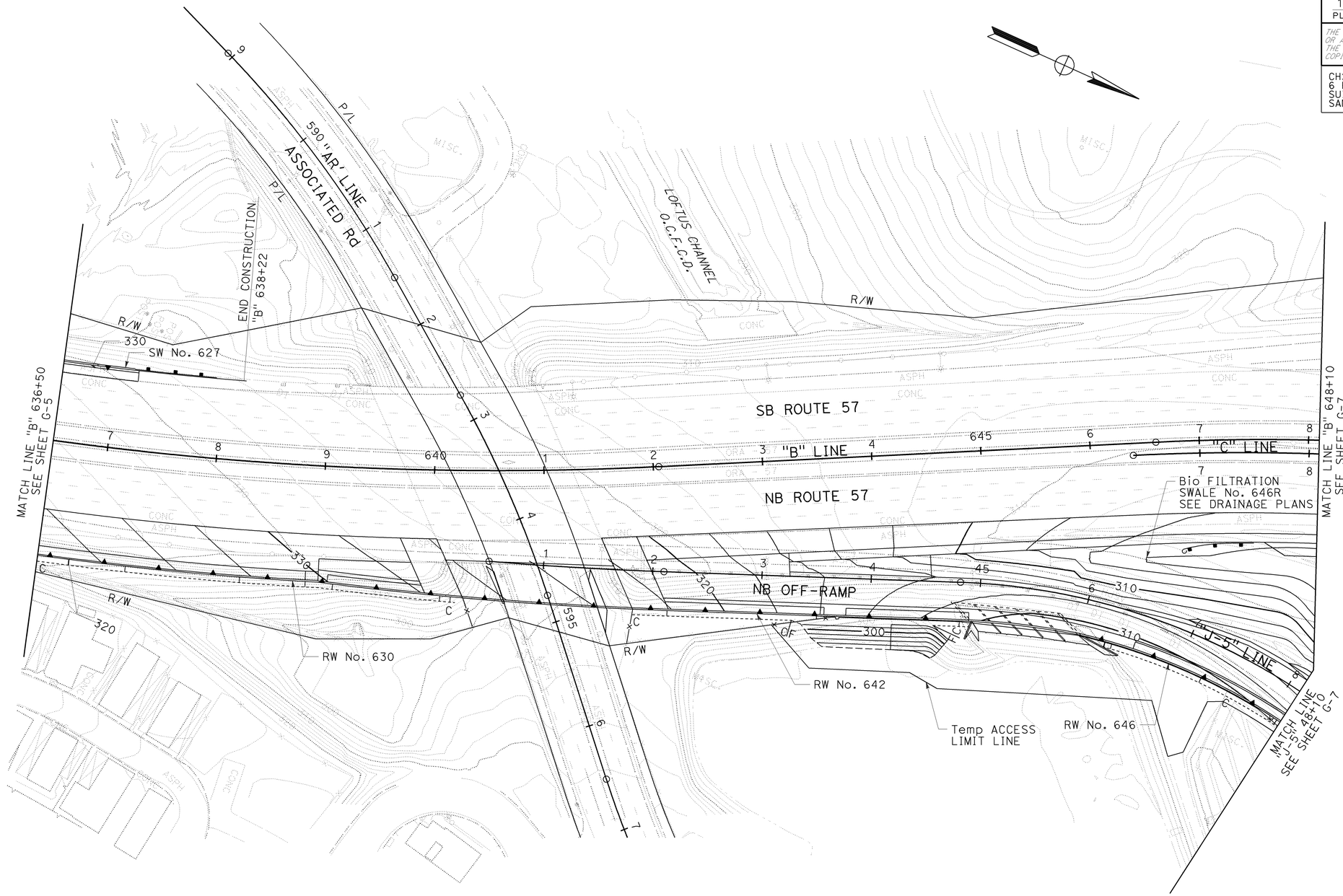

THIS PLAN ACCURATE FOR CONTOUR GRADING WORK ONLY

CONTOUR GRADING PLAN

SCALE: 1" = 50'

G-6

REVISED BY	DATE REVISED

CALCULATED- RYAN MITRY
DESIGNED BY
CHECKED BY MARK FRICKE

CONSULTANT FUNCTIONAL SUPERVISOR
THOMAS IONTA

STATE OF CALIFORNIA - DEPARTMENT OF TRANSPORTATION
Caltrans

LAST REVISION 00-00-00
DATE PLOTTED => 25-JAN-2010
TIME PLOTTED => 11:10

BORDER LAST REVISED 4/11/2008

RELATIVE BORDER SCALE IS IN INCHES 0 1 2 3

USERNAME => trpierce
DGN FILE => c0F032ha006.dgn

CU 12220

EA 0F0321

Dist	COUNTY	ROUTE	POST MILES TOTAL PROJECT	SHEET No.	TOTAL SHEETS
12	Ora	57	18.4/20.9	107	856

REGISTERED CIVIL ENGINEER 06-15-09 DATE

1-25-10
PLANS APPROVAL DATE

REGISTERED PROFESSIONAL ENGINEER MARK FRICKE No. C45703 Exp. 12-31-10 CIVIL STATE OF CALIFORNIA

THE STATE OF CALIFORNIA OR ITS OFFICERS OR AGENTS SHALL NOT BE RESPONSIBLE FOR THE ACCURACY OR COMPLETENESS OF SCANNED COPIES OF THIS PLAN SHEET.

CH2M HILL
6 HUTTON CENTRE DRIVE,
SUITE 700
SANTA ANA, CA 92707

OCTA
550 S. MAIN STREET
ORANGE, CA 92863

NOTE:

1. FOR COMPLETE R/W AND ACCURATE ACCESS DATA, SEE R/W RECORD MAPS AT DISTRICT OFFICE.

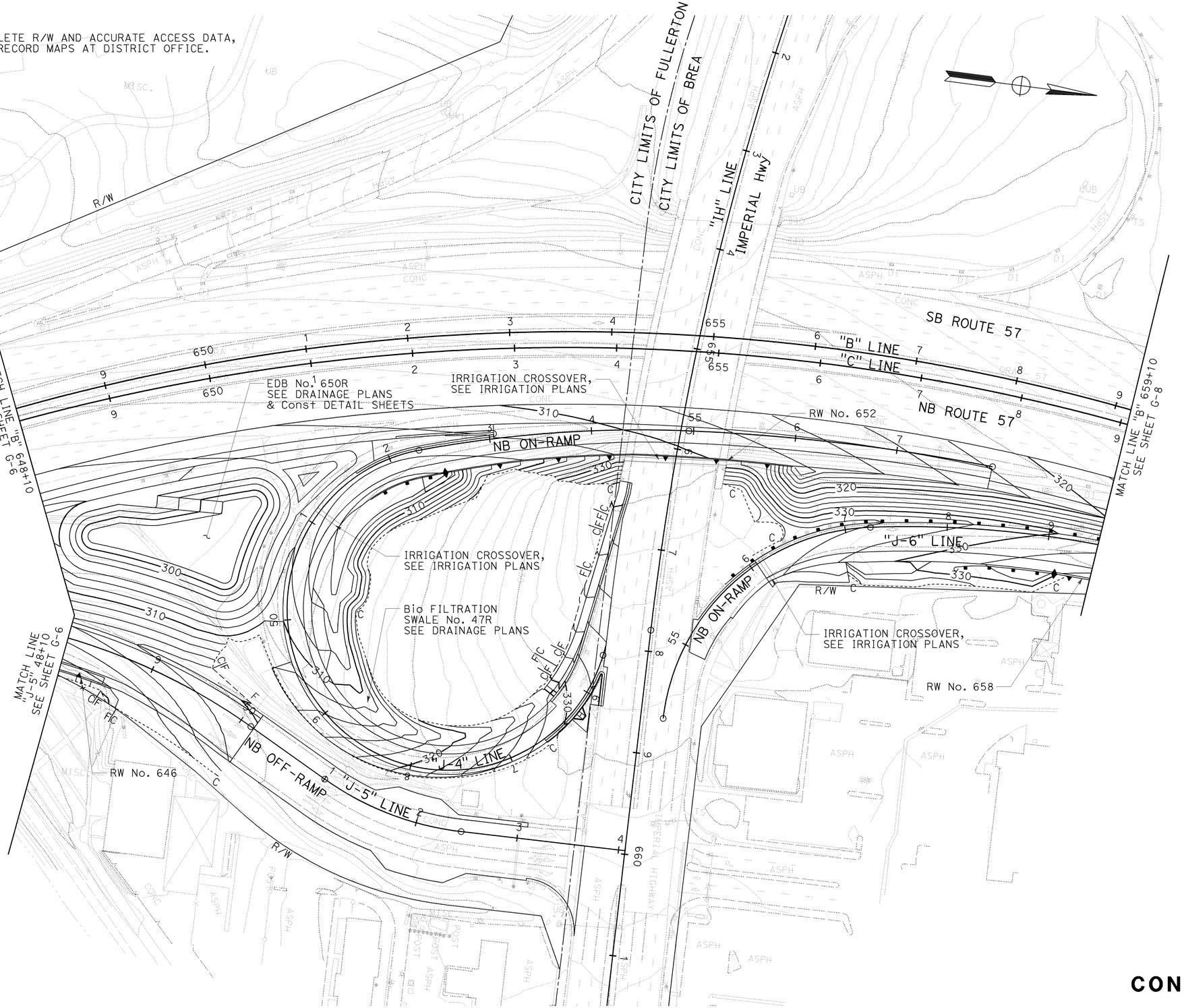

THIS PLAN ACCURATE FOR CONTOUR GRADING WORK ONLY

CONTOUR GRADING PLAN

SCALE: 1" = 50'

G-7

STATE OF CALIFORNIA - DEPARTMENT OF TRANSPORTATION

Caltrans

CONSULTANT FUNCTIONAL SUPERVISOR: THOMAS IONTA

CALCULATED-DESIGNED BY: RYAN MITRY

CHECKED BY: MARK FRICKE

REVISED BY

DATE REVISED

LAST REVISION 00-00-00

DATE PLOTTED => 25-JAN-2010
TIME PLOTTED => 11:10

Dist	COUNTY	ROUTE	POST MILES TOTAL PROJECT	SHEET No.	TOTAL SHEETS
12	Ora	57	18.4/20.9	108	856

Mark Fricke 06-15-09
REGISTERED CIVIL ENGINEER DATE

REGISTERED PROFESSIONAL ENGINEER
MARK FRICKE
No. C45703
Exp. 12-31-10
CIVIL
STATE OF CALIFORNIA

1-25-10
PLANS APPROVAL DATE

THE STATE OF CALIFORNIA OR ITS OFFICERS OR AGENTS SHALL NOT BE RESPONSIBLE FOR THE ACCURACY OR COMPLETENESS OF SCANNED COPIES OF THIS PLAN SHEET.

CH2M HILL
6 HUTTON CENTRE DRIVE,
SUITE 700
SANTA ANA, CA 92707

OCTA
550 S. MAIN STREET
ORANGE, CA 92863

NOTES:

1. FOR COMPLETE R/W AND ACCURATE ACCESS DATA, SEE R/W RECORD MAPS AT DISTRICT OFFICE.

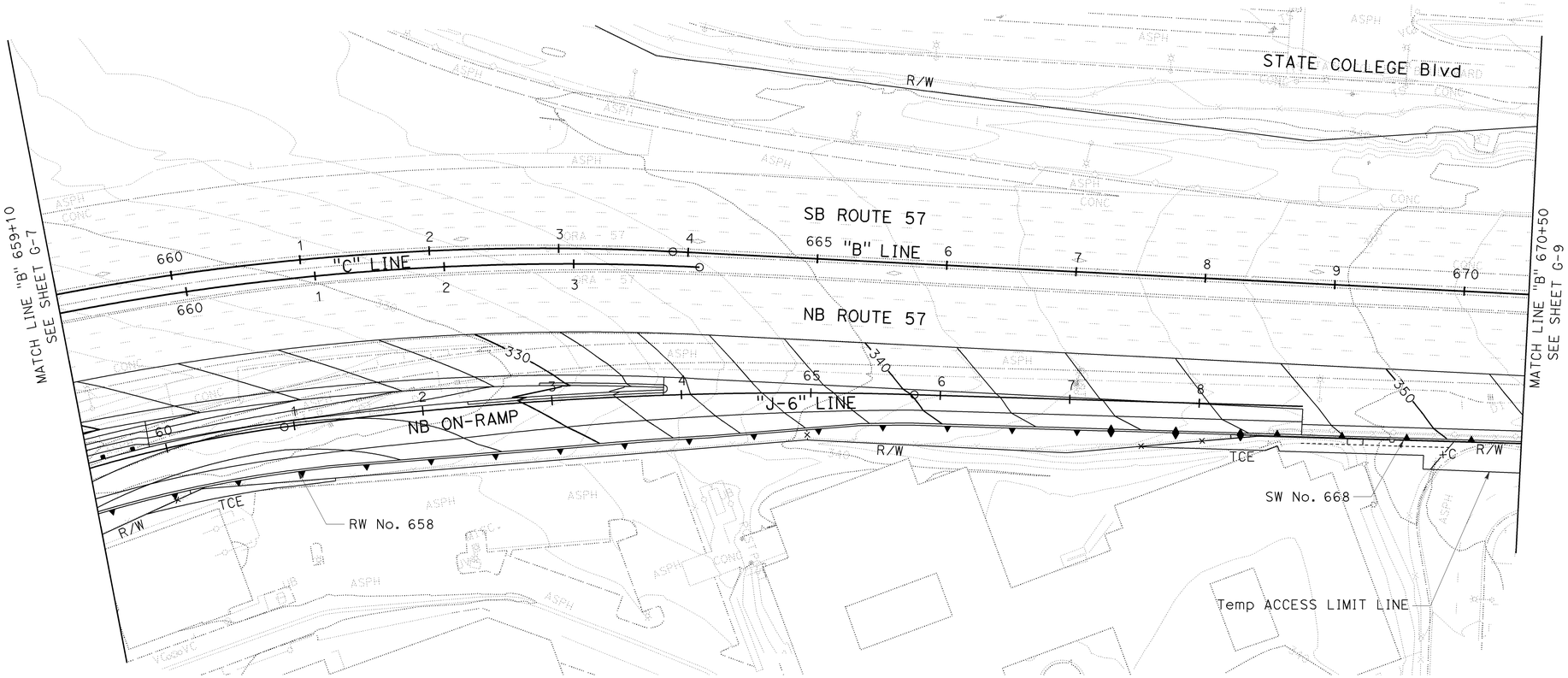

THIS PLAN ACCURATE FOR CONTOUR GRADING WORK ONLY

CONTOUR GRADING PLAN

SCALE: 1" = 50'

G-8

STATE OF CALIFORNIA - DEPARTMENT OF TRANSPORTATION
Caltrans
CONSULTANT FUNCTIONAL SUPERVISOR: THOMAS IONTA
CALCULATED-DESIGNED BY: RYAN MITRY
CHECKED BY: MARK FRICKE
REVISED BY | DATE REVISED

LAST REVISION: DATE PLOTTED => 25-JAN-2010; TIME PLOTTED => 11:10
00-00-00

BORDER LAST REVISED 4/11/2008 | RELATIVE BORDER SCALE IS IN INCHES 0 1 2 3 | USERNAME => trpierce | DGN FILE => c0F032ha008.dgn | CU 12220 | EA 0F0321

Dist	COUNTY	ROUTE	POST MILES TOTAL PROJECT	SHEET No.	TOTAL SHEETS
12	Ora	57	18.4/20.9	109	856

Mark Fricke 06-15-09
REGISTERED CIVIL ENGINEER DATE

1-25-10
PLANS APPROVAL DATE

REGISTERED PROFESSIONAL ENGINEER
MARK FRICKE
No. C45703
Exp. 12-31-10
CIVIL
STATE OF CALIFORNIA

THE STATE OF CALIFORNIA OR ITS OFFICERS OR AGENTS SHALL NOT BE RESPONSIBLE FOR THE ACCURACY OR COMPLETENESS OF SCANNED COPIES OF THIS PLAN SHEET.

CH2M HILL
6 HUTTON CENTRE DRIVE,
SUITE 700
SANTA ANA, CA 92707

OCTA
550 S. MAIN STREET
ORANGE, CA 92863

NOTES:

1. FOR COMPLETE R/W AND ACCURATE ACCESS DATA, SEE R/W RECORD MAPS AT DISTRICT OFFICE.

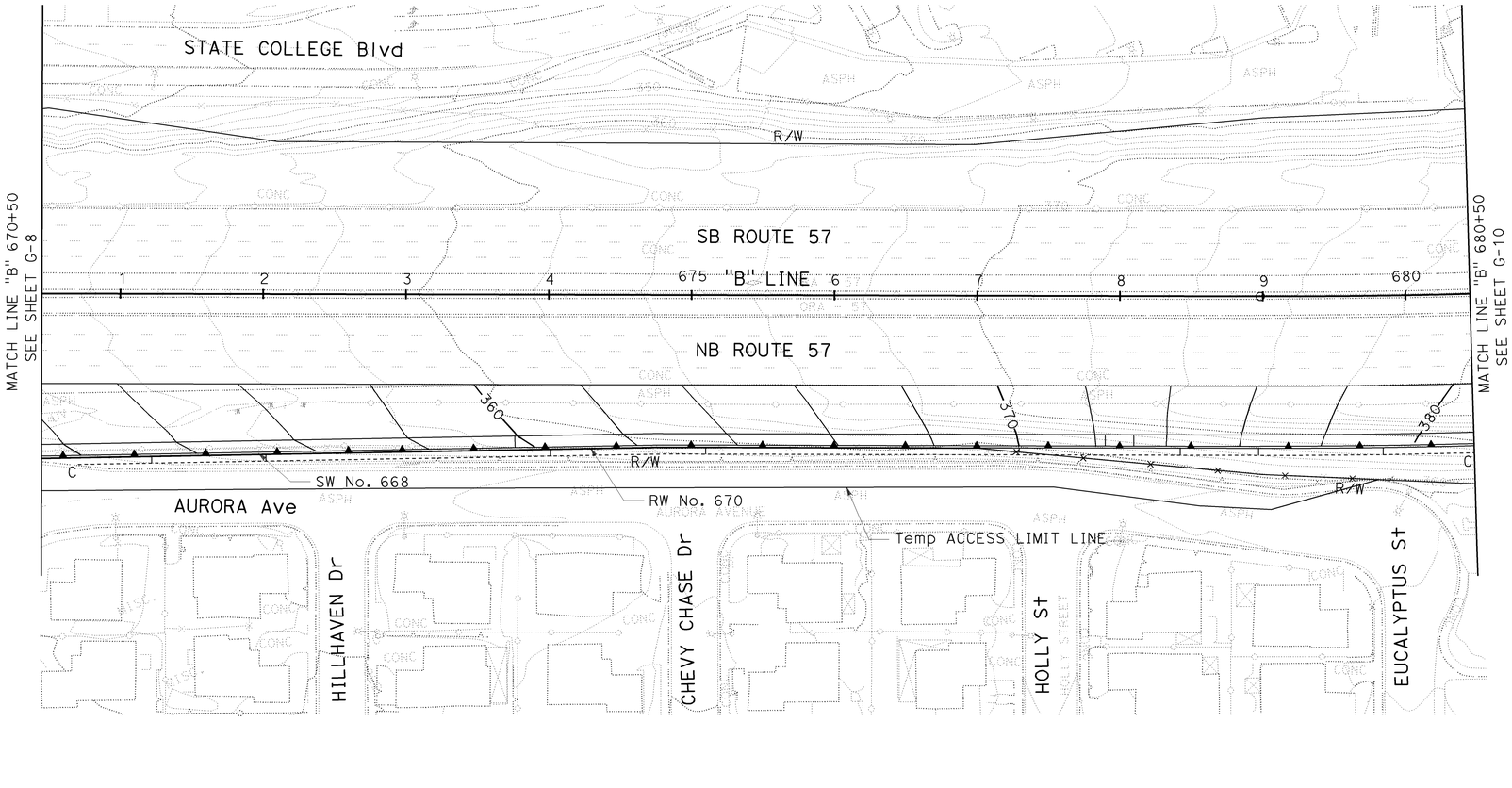

THIS PLAN ACCURATE FOR CONTOUR GRADING WORK ONLY

CONTOUR GRADING PLAN

SCALE: 1" = 50'

G-9

REVISED BY	DATE REVISED

CALCULATED-DESIGNED BY: RYAN MITRY
CHECKED BY: MARK FRICKE

CONSULTANT FUNCTIONAL SUPERVISOR: THOMAS IONTA

STATE OF CALIFORNIA - DEPARTMENT OF TRANSPORTATION
Caltrans

LAST REVISION 00-00-00
DATE PLOTTED => 25-JAN-2010
TIME PLOTTED => 11:11

BORDER LAST REVISED 4/11/2008

RELATIVE BORDER SCALE IS IN INCHES 0 1 2 3

USERNAME => trpierce
DGN FILE => c0F032ha009.dgn

CU 12220

EA 0F0321

Dist	COUNTY	ROUTE	POST MILES TOTAL PROJECT	SHEET No.	TOTAL SHEETS
12	Ora	57	18.4/20.9	110	856

Mark Fricke 06-15-09
REGISTERED CIVIL ENGINEER DATE

REGISTERED PROFESSIONAL ENGINEER
MARK FRICKE
No. C45703
Exp. 12-31-10
CIVIL
STATE OF CALIFORNIA

1-25-10
PLANS APPROVAL DATE

THE STATE OF CALIFORNIA OR ITS OFFICERS OR AGENTS SHALL NOT BE RESPONSIBLE FOR THE ACCURACY OR COMPLETENESS OF SCANNED COPIES OF THIS PLAN SHEET.

CH2M HILL
6 HUTTON CENTRE DRIVE,
SUITE 700
SANTA ANA, CA 92707

OCTA
550 S. MAIN STREET
ORANGE, CA 92863

NOTE:

1. FOR COMPLETE R/W AND ACCURATE ACCESS DATA, SEE R/W RECORD MAPS AT DISTRICT OFFICE.

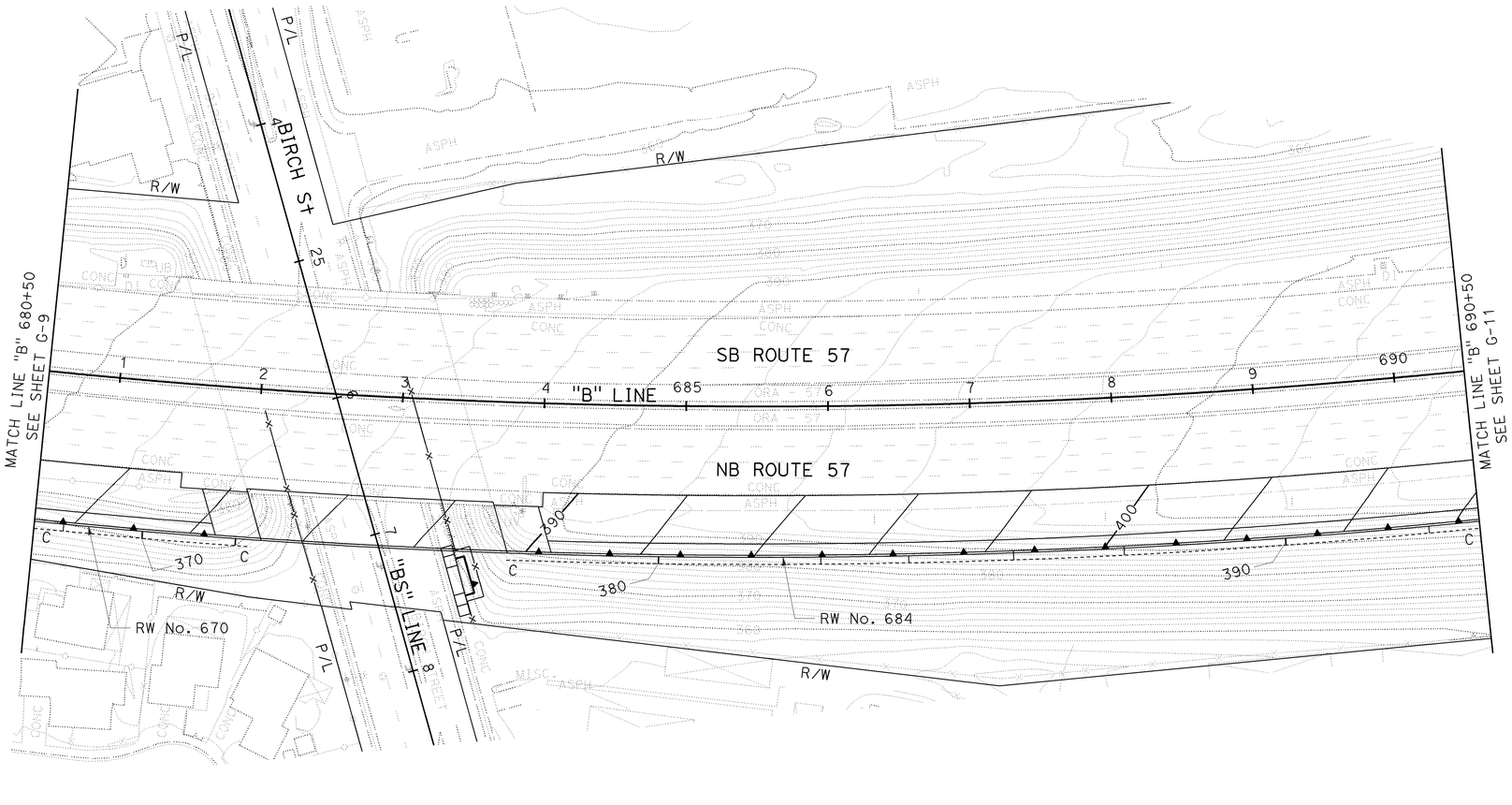

THIS PLAN ACCURATE FOR CONTOUR GRADING WORK ONLY

CONTOUR GRADING PLAN

SCALE: 1" = 50'

G-10

REVISED BY	
DATE REVISED	
CALCULATED-DESIGNED BY	RYAN MITRY
CHECKED BY	MARK FRICKE
CONSULTANT FUNCTIONAL SUPERVISOR	THOMAS IONTA

STATE OF CALIFORNIA - DEPARTMENT OF TRANSPORTATION
Caltrans

LAST REVISION 00-00-00
DATE PLOTTED => 25-JAN-2010
TIME PLOTTED => 11:11

BORDER LAST REVISED 4/11/2008

RELATIVE BORDER SCALE IS IN INCHES 0 1 2 3

USERNAME => trpierce
DGN FILE => c0F032ha010.dgn

CU 12220

EA 0F0321

Dist	COUNTY	ROUTE	POST MILES TOTAL PROJECT	SHEET No.	TOTAL SHEETS
12	Ora	57	18.4/20.9	111	856

Mark Fricke 06-15-09
REGISTERED CIVIL ENGINEER DATE

1-25-10
PLANS APPROVAL DATE

REGISTERED PROFESSIONAL ENGINEER
MARK FRICKE
No. C45703
Exp. 12-31-10
CIVIL
STATE OF CALIFORNIA

THE STATE OF CALIFORNIA OR ITS OFFICERS OR AGENTS SHALL NOT BE RESPONSIBLE FOR THE ACCURACY OR COMPLETENESS OF SCANNED COPIES OF THIS PLAN SHEET.

CH2M HILL
6 HUTTON CENTRE DRIVE,
SUITE 700
SANTA ANA, CA 92707

OCTA
550 S. MAIN STREET
ORANGE, CA 92863

NOTE:

1. FOR COMPLETE R/W AND ACCURATE ACCESS DATA, SEE R/W RECORD MAPS AT DISTRICT OFFICE.

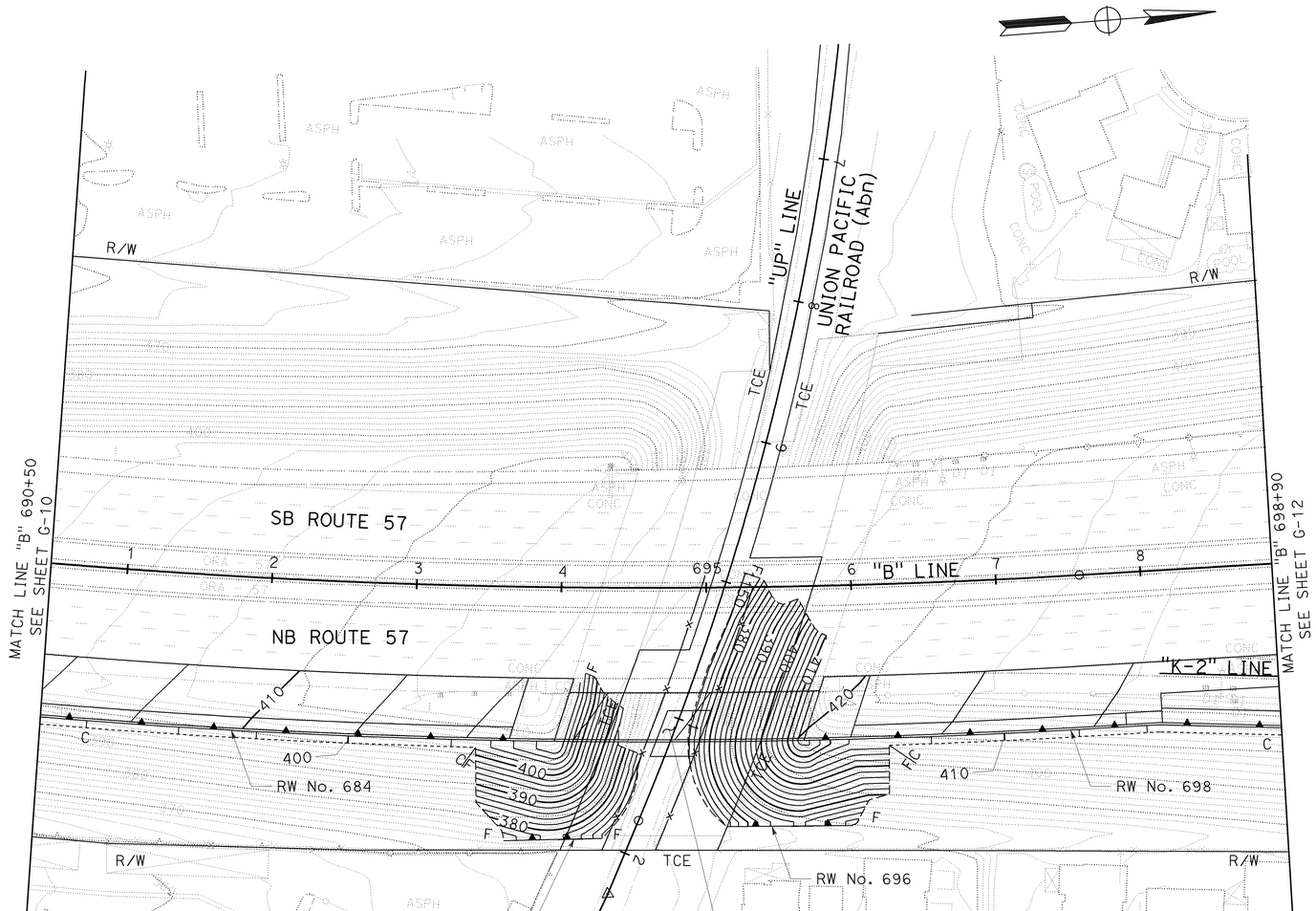

THIS PLAN ACCURATE FOR CONTOUR GRADING WORK ONLY

CONTOUR GRADING PLAN

SCALE: 1" = 50'

G-11

STATE OF CALIFORNIA - DEPARTMENT OF TRANSPORTATION
Caltrans

CONSULTANT FUNCTIONAL SUPERVISOR: THOMAS IONTA
CALCULATED-DESIGNED BY: RYAN MITRY
CHECKED BY: MARK FRICKE
REVISED BY | DATE REVISED

LAST REVISION: 00-00-00
DATE PLOTTED => 25-JAN-2010
TIME PLOTTED => 11:11

BORDER LAST REVISED 4/11/2008
RELATIVE BORDER SCALE IS IN INCHES 0 1 2 3
USERNAME => trpierce
DGN FILE => c0F032ha011.dgn
CU 12220
EA 0F0321

NOTE:

1. FOR COMPLETE R/W AND ACCURATE ACCESS DATA, SEE R/W RECORD MAPS AT DISTRICT OFFICE.

Dist	COUNTY	ROUTE	POST MILES TOTAL PROJECT	SHEET No.	TOTAL SHEETS
12	Ora	57	18.4/20.9	112	856

Mark Fricke 06-15-09
REGISTERED CIVIL ENGINEER DATE

1-25-10
PLANS APPROVAL DATE

REGISTERED PROFESSIONAL ENGINEER
MARK FRICKE
No. C45703
Exp. 12-31-10
CIVIL
STATE OF CALIFORNIA

THE STATE OF CALIFORNIA OR ITS OFFICERS OR AGENTS SHALL NOT BE RESPONSIBLE FOR THE ACCURACY OR COMPLETENESS OF SCANNED COPIES OF THIS PLAN SHEET.

CH2M HILL
6 HUTTON CENTRE DRIVE,
SUITE 700
SANTA ANA, CA 92707

OCTA
550 S. MAIN STREET
ORANGE, CA 92863

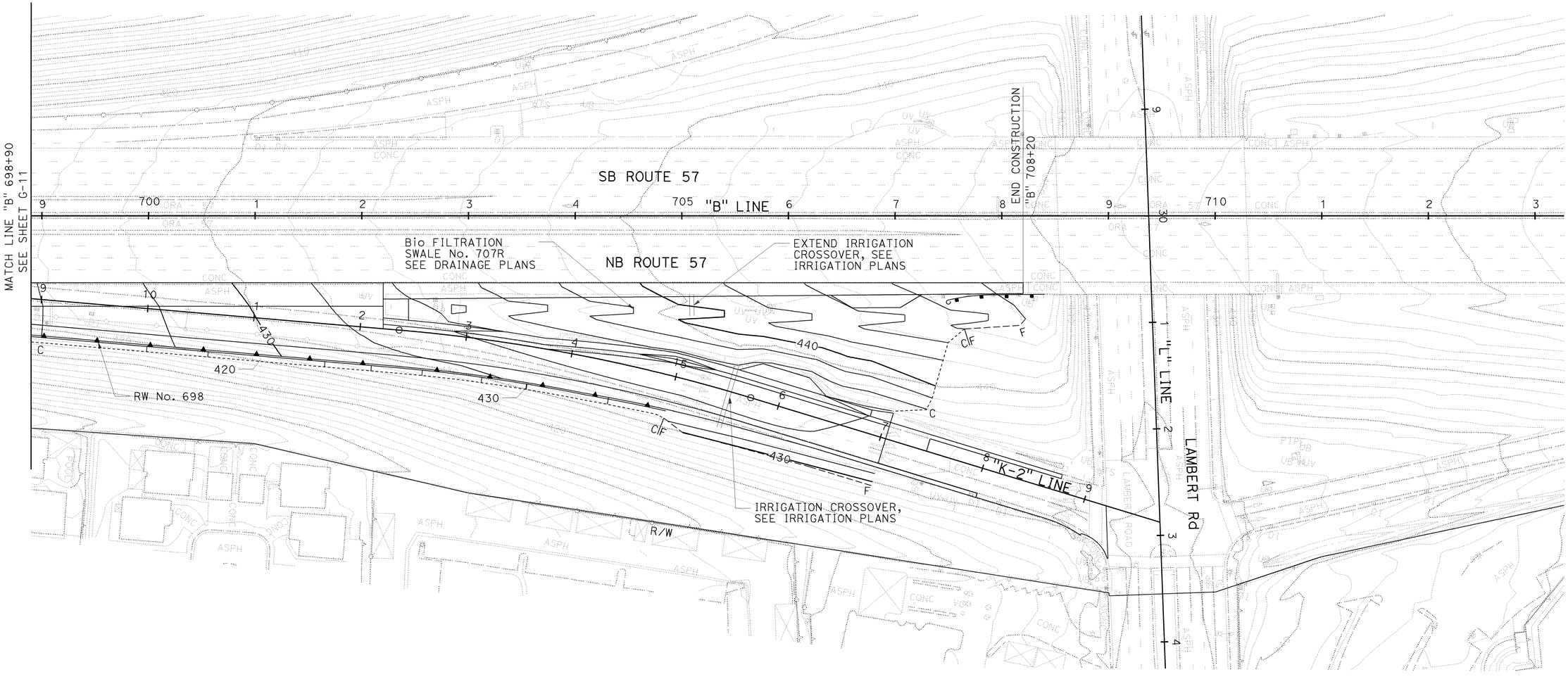

THIS PLAN ACCURATE FOR CONTOUR GRADING WORK ONLY

CONTOUR GRADING PLAN

SCALE: 1" = 50'

G-12

REVISED BY | DATE REVISED
CALCULATED-DESIGNED BY: RYAN MITRY
CHECKED BY: MARK FRICKE
CONSULTANT FUNCTIONAL SUPERVISOR: THOMAS IONTA
STATE OF CALIFORNIA - DEPARTMENT OF TRANSPORTATION
Caltrans

LAST REVISION | DATE PLOTTED => 25-JAN-2010
00-00-00 | TIME PLOTTED => 11:11

BORDER LAST REVISED 4/11/2008
RELATIVE BORDER SCALE IS IN INCHES 0 1 2 3
USERNAME => trpierce
DGN FILE => c0F032ha012.dgn
CU 12220
EA 0F0321

Dist	COUNTY	ROUTE	POST MILES TOTAL PROJECT	SHEET No.	TOTAL SHEETS
12	Ora	57	18.4/20.9	113	856

Robert M. Henderson — 11-16-09
REGISTERED CIVIL ENGINEER — DATE

ROBERT M. HENDERSON No. C66736 Exp. 09/30/10 CIVIL — REGISTERED PROFESSIONAL ENGINEER — STATE OF CALIFORNIA

1-25-10
PLANS APPROVAL DATE

THE STATE OF CALIFORNIA OR ITS OFFICERS OR AGENTS SHALL NOT BE RESPONSIBLE FOR THE ACCURACY OR COMPLETENESS OF SCANNED COPIES OF THIS PLAN SHEET.

CH2M HILL
6 HUTTON CENTRE DRIVE,
SUITE 700
SANTA ANA, CA 92707

OCTA
550 S. MAIN STREET
ORANGE, CA 92863

NOTE:

1. FOR COMPLETE RIGHT OF WAY AND ACCURATE ACCESS DATA, SEE RIGHT OF WAY RECORD MAPS AT DISTRICT OFFICE.

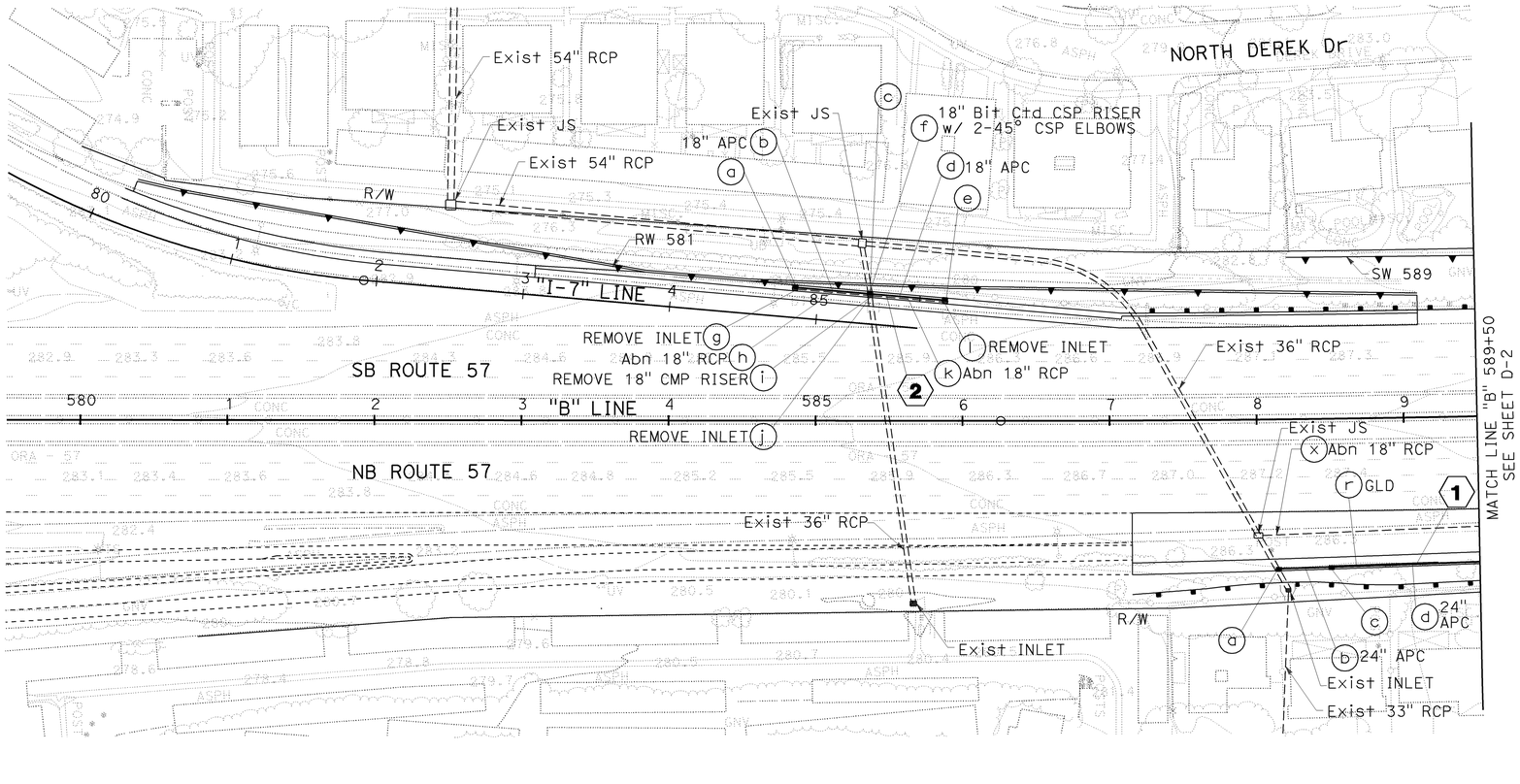

GENERAL DRAINAGE NOTES:

1. HORIZONTAL LOCATIONS OF EXISTING STORM DRAINS ARE BASED ON BEST AVAILABLE INFORMATION. ACTUAL LOCATIONS MAY VARY FROM THOSE SHOWN. CONTRACTOR SHALL VERIFY LOCATIONS AND ELEVATIONS OF ALL STORM DRAINS PRIOR TO CONSTRUCTION, AND REPORT ANY MAJOR DISCREPANCIES TO THE ENGINEER.
2. SWALE AND CONCRETE CHANNEL LONGITUDINAL SLOPE AND CROSS SLOPE TO BE CONTROLLED BY GRADING UNLESS SPECIFIED ON PLANS. SEE DD-4.
3. FOR DETAILS OF GD-1 INLET SEE Sht DD-1.
4. GLD DEPTH AT INLET SHALL BE A MINIMUM OF 13.3" UNLESS OTHERWISE NOTED IN DP SHEETS.
5. FOR CONCRETE APRON SEE Sht DD-2.
6. FOR CONCRETE COLLAR SEE Sht DD-2.
7. ALL INLET GRATES SHALL BE TYPE 24-12 STANDARD PLAN D77A, UNLESS OTHERWISE SPECIFIED.

LEGEND:

(3)	DRAINAGE SYSTEM NUMBER
(r)	DRAINAGE UNIT NUMBER
[1]	CURVE No.
	ROCK SLOPE PROTECTION (RSP) SEE Sht DD-8
	DRAINAGE INLET
	FLOW DIRECTION
	OVERSIDE DRAIN
	FLARE END SECTION (FES)
\\\\\\	REMOVE CONCRETE DITCH

ABBREVIATIONS:

BSW	BIO-SWALE
EDB	EXTENDED DETENTION BASIN
GLD	GRATED LINE DRAIN (PRE-SLOPED)
HDPE	HIGH DENSITY POLYETHYLENE
OSD	OVERSIDE DRAIN
w/	WITH

THIS PLAN ACCURATE FOR DRAINAGE WORK ONLY

DRAINAGE PLAN

SCALE: 1" = 50'

D-1

REVISED BY | DATE REVISED
DEANIE DING | ROBERT HENDERSON
CALCULATED-DESIGNED BY | CHECKED BY
CONSULTANT FUNCTIONAL SUPERVISOR
THOMAS IONTA
STATE OF CALIFORNIA - DEPARTMENT OF TRANSPORTATION
Caltrans

LAST REVISION | DATE PLOTTED => 25-JAN-2010
00-00-00 | TIME PLOTTED => 11:11

BORDER LAST REVISED 4/11/2008
RELATIVE BORDER SCALE IS IN INCHES 0 1 2 3
USERNAME => trpierce
DGN FILE => c0F032ia001.dgn
CU 12220
EA 0F0321

Dist	COUNTY	ROUTE	POST MILES TOTAL PROJECT	SHEET No.	TOTAL SHEETS
12	Ora	57	18.4/20.9	114	856

REGISTERED CIVIL ENGINEER — 06-15-09 DATE

ROBERT M. HENDERSON No. C66736 Exp. 09/30/10 CIVIL — REGISTERED PROFESSIONAL ENGINEER — STATE OF CALIFORNIA

1-25-10
PLANS APPROVAL DATE

THE STATE OF CALIFORNIA OR ITS OFFICERS OR AGENTS SHALL NOT BE RESPONSIBLE FOR THE ACCURACY OR COMPLETENESS OF SCANNED COPIES OF THIS PLAN SHEET.

CH2M HILL
6 HUTTON CENTRE DRIVE,
SUITE 700
SANTA ANA, CA 92707

OCTA
550 S. MAIN STREET
ORANGE, CA 92863

NOTE:

1. FOR COMPLETE RIGHT OF WAY AND ACCURATE ACCESS DATA, SEE RIGHT OF WAY RECORD MAPS AT DISTRICT OFFICE.

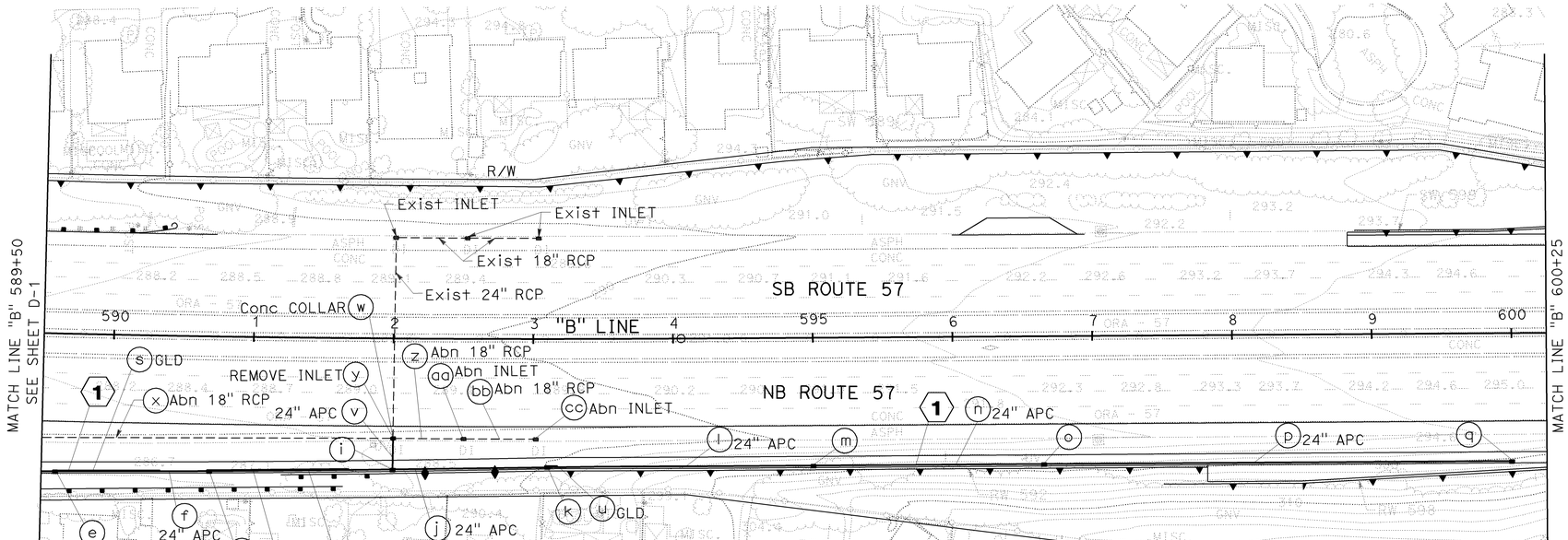

THIS PLAN ACCURATE FOR DRAINAGE WORK ONLY

DRAINAGE PLAN

SCALE: 1" = 50'

D-2

STATE OF CALIFORNIA - DEPARTMENT OF TRANSPORTATION
Caltrans

CONSULTANT FUNCTIONAL SUPERVISOR: THOMAS IONTA
CALCULATED-DESIGNED BY: DEANIE DING
CHECKED BY: ROBERT HENDERSON
REVISED BY
DATE REVISED

LAST REVISION 00-00-00
DATE PLOTTED => 25-JAN-2010
TIME PLOTTED => 11:11

BORDER LAST REVISED 4/11/2008
RELATIVE BORDER SCALE IS IN INCHES 0 1 2 3
USERNAME => trpierce
DGN FILE => c0F032ia002.dgn
CU 12220
EA 0F0321

Dist	COUNTY	ROUTE	POST MILES TOTAL PROJECT	SHEET No.	TOTAL SHEETS
12	Ora	57	18.4/20.9	115	856

REGISTERED CIVIL ENGINEER — 06-15-09 DATE

ROBERT M. HENDERSON No. C66736 Exp. 09/30/10 CIVIL — REGISTERED PROFESSIONAL ENGINEER — STATE OF CALIFORNIA

1-25-10
PLANS APPROVAL DATE

THE STATE OF CALIFORNIA OR ITS OFFICERS OR AGENTS SHALL NOT BE RESPONSIBLE FOR THE ACCURACY OR COMPLETENESS OF SCANNED COPIES OF THIS PLAN SHEET.

CH2M HILL
6 HUTTON CENTRE DRIVE,
SUITE 700
SANTA ANA, CA 92707

OCTA
550 S. MAIN STREET
ORANGE, CA 92863

NOTE:

1. FOR COMPLETE RIGHT OF WAY AND ACCURATE ACCESS DATA, SEE RIGHT OF WAY RECORD MAPS AT DISTRICT OFFICE.

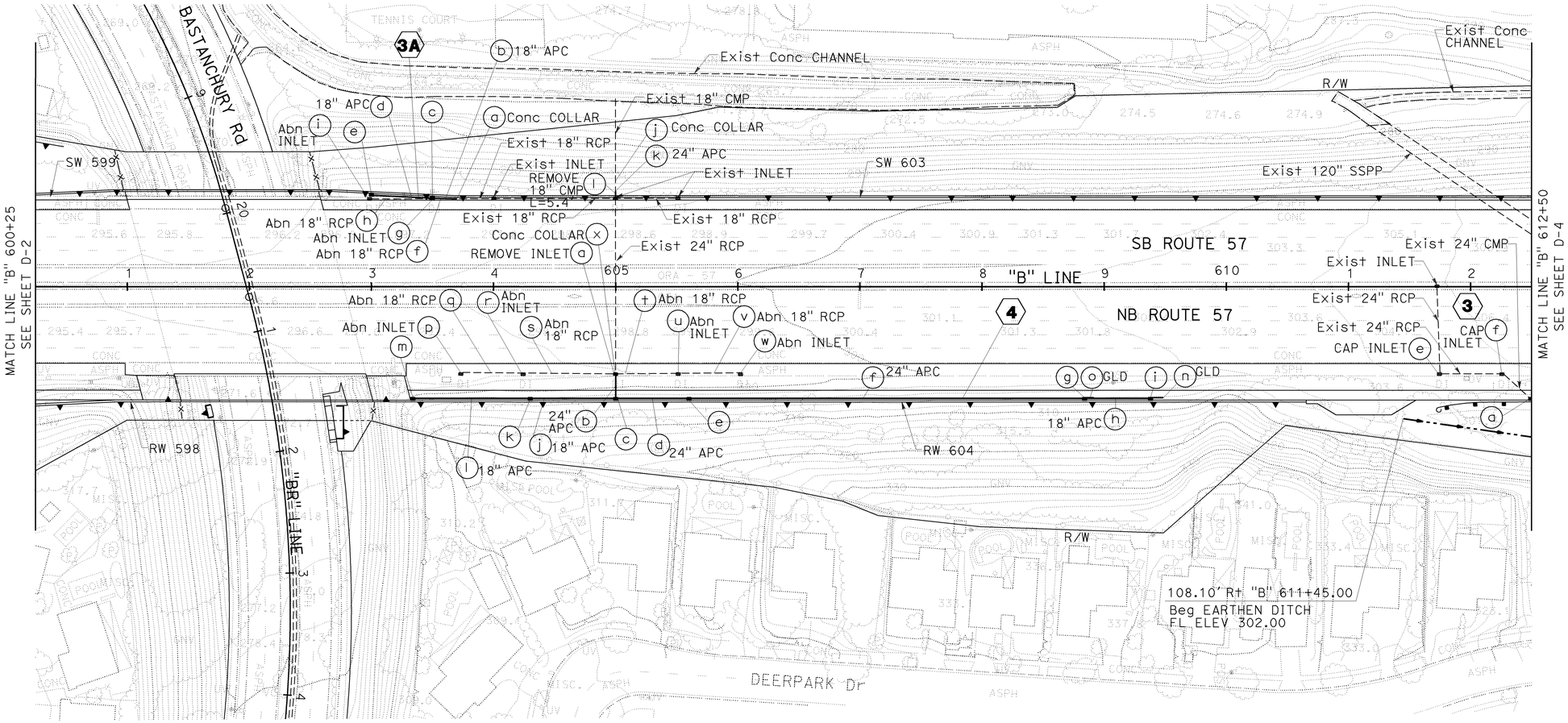

THIS PLAN ACCURATE FOR DRAINAGE WORK ONLY

DRAINAGE PLAN

SCALE: 1" = 50'

D-3

STATE OF CALIFORNIA - DEPARTMENT OF TRANSPORTATION
CONSULTANT FUNCTIONAL SUPERVISOR: THOMAS IONTA
CALCULATED-DESIGNED BY: DEANIE DING
CHECKED BY: ROBERT HENDERSON
REVISED BY
DATE REVISED

LAST REVISION 00-00-00
DATE PLOTTED => 25-JAN-2010
TIME PLOTTED => 11:12

BORDER LAST REVISED 4/11/2008
RELATIVE BORDER SCALE IS IN INCHES 0 1 2 3
USERNAME => trpierce
DGN FILE => c0F032ia003.dgn
CU 12220
EA 0F0321

Dist	COUNTY	ROUTE	POST MILES TOTAL PROJECT	SHEET No.	TOTAL SHEETS
12	Ora	57	18.4/20.9	116	856

Robert M. Henderson 06-15-09
REGISTERED CIVIL ENGINEER DATE

1-25-10
PLANS APPROVAL DATE

REGISTERED PROFESSIONAL ENGINEER — ROBERT M. HENDERSON — No. C66736 — Exp. 09/30/10 — CIVIL — STATE OF CALIFORNIA

THE STATE OF CALIFORNIA OR ITS OFFICERS OR AGENTS SHALL NOT BE RESPONSIBLE FOR THE ACCURACY OR COMPLETENESS OF SCANNED COPIES OF THIS PLAN SHEET.

CH2M HILL
6 HUTTON CENTRE DRIVE,
SUITE 700
SANTA ANA, CA 92707

OCTA
550 S. MAIN STREET
ORANGE, CA 92863

REVISED BY | DATE REVISED

DESIGNED - DEANIE DING | CALCULATED - | CHECKED BY ROBERT HENDERSON

CONSULTANT FUNCTIONAL SUPERVISOR THOMAS IONTA

STATE OF CALIFORNIA - DEPARTMENT OF TRANSPORTATION

NOTE:

1. FOR COMPLETE RIGHT OF WAY AND ACCURATE ACCESS DATA, SEE RIGHT OF WAY RECORD MAPS AT DISTRICT OFFICE.

DRAINAGE CURVE DATA

No.	R	△	T	L
1	175.00′	14°27′46"	22.46′	44.68′
2	40.00′	17°55′30"	6.31′	12.51′

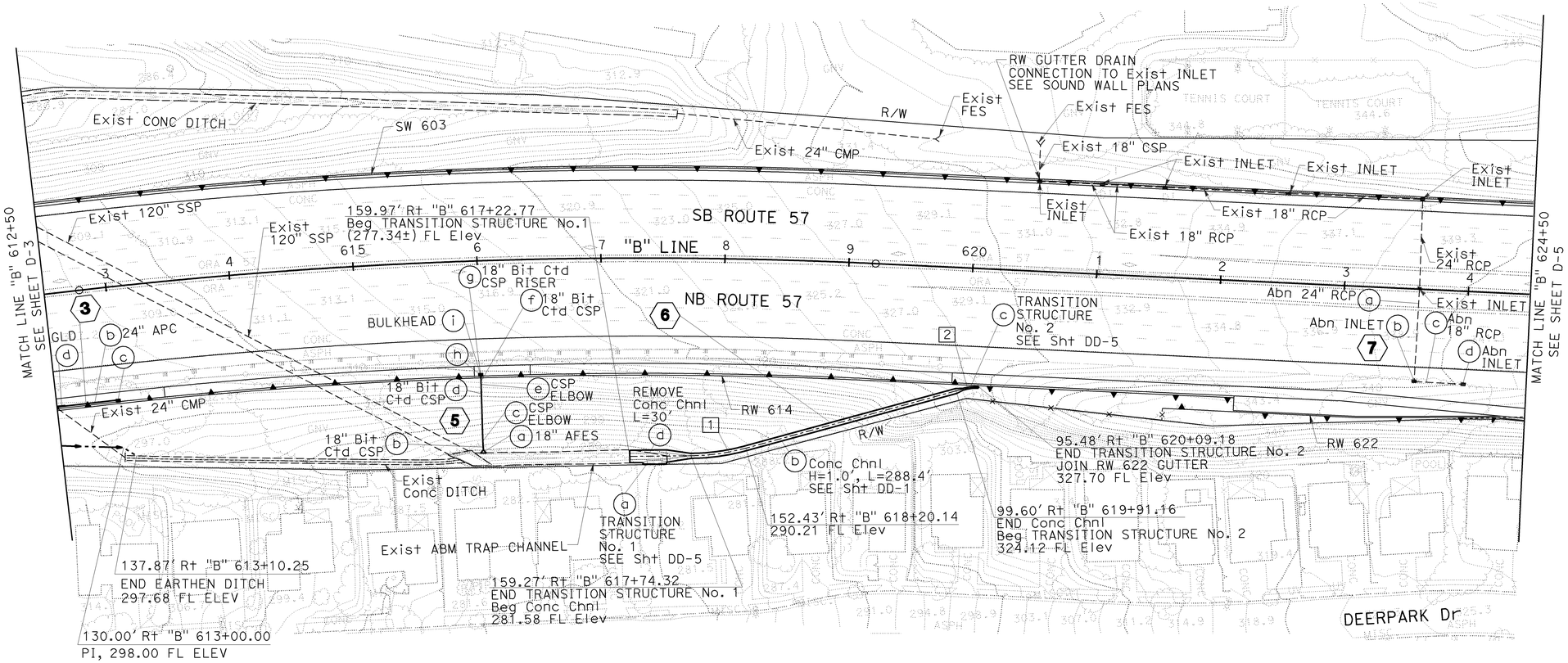

THIS PLAN ACCURATE FOR DRAINAGE WORK ONLY

DRAINAGE PLAN

SCALE: 1" = 50′

D-4

LAST REVISION | DATE PLOTTED => 25-JAN-2010 | TIME PLOTTED => 11:12
00-00-00

BORDER LAST REVISED 4/11/2008 | RELATIVE BORDER SCALE IS IN INCHES 0 1 2 3 | USERNAME => trpierce | DGN FILE => c0F0321a004.dgn | CU 12220 | EA 0F0321

Dist	COUNTY	ROUTE	POST MILES TOTAL PROJECT	SHEET No.	TOTAL SHEETS
12	Ora	57	18.4/20.9	117	856

REGISTERED CIVIL ENGINEER — 06-15-09 DATE

ROBERT M. HENDERSON No. C66736 Exp. 09/30/10 CIVIL — REGISTERED PROFESSIONAL ENGINEER — STATE OF CALIFORNIA

1-25-10
PLANS APPROVAL DATE

THE STATE OF CALIFORNIA OR ITS OFFICERS OR AGENTS SHALL NOT BE RESPONSIBLE FOR THE ACCURACY OR COMPLETENESS OF SCANNED COPIES OF THIS PLAN SHEET.

CH2M HILL
6 HUTTON CENTRE DRIVE,
SUITE 700
SANTA ANA, CA 92707

OCTA
550 S. MAIN STREET
ORANGE, CA 92863

NOTE:

1. FOR COMPLETE RIGHT OF WAY AND ACCURATE ACCESS DATA, SEE RIGHT OF WAY RECORD MAPS AT DISTRICT OFFICE.

DRAINAGE CURVE DATA

No.	R	△	T	L
1	3103.50′	03°38′59"	98.88′	197.69′
2	3103.50′	02°14′11"	60.58′	121.14′

THIS PLAN ACCURATE FOR DRAINAGE WORK ONLY

DRAINAGE PLAN

SCALE: 1" = 50′

D-5

CALCULATED-DESIGNED BY: DEANIE DING
CHECKED BY: ROBERT HENDERSON
CONSULTANT FUNCTIONAL SUPERVISOR: THOMAS IONTA
REVISED BY | DATE REVISED

STATE OF CALIFORNIA - DEPARTMENT OF TRANSPORTATION
Caltrans

LAST REVISION: DATE PLOTTED => 25-JAN-2010
00-00-00 TIME PLOTTED => 11:12

BORDER LAST REVISED 4/11/2008 | RELATIVE BORDER SCALE IS IN INCHES 0 1 2 3 | USERNAME => trpierce | DGN FILE => c0F032ia005.dgn | CU 12220 | EA 0F0321

Dist	COUNTY	ROUTE	POST MILES TOTAL PROJECT	SHEET No.	TOTAL SHEETS
12	Ora	57	18.4/20.9	118	856

REGISTERED CIVIL ENGINEER 06-15-09 DATE

1-25-10
PLANS APPROVAL DATE

REGISTERED PROFESSIONAL ENGINEER ROBERT M. HENDERSON No. C66736 Exp. 09/30/10 CIVIL STATE OF CALIFORNIA

THE STATE OF CALIFORNIA OR ITS OFFICERS OR AGENTS SHALL NOT BE RESPONSIBLE FOR THE ACCURACY OR COMPLETENESS OF SCANNED COPIES OF THIS PLAN SHEET.

CH2M HILL
6 HUTTON CENTRE DRIVE,
SUITE 700
SANTA ANA, CA 92707

OCTA
550 S. MAIN STREET
ORANGE, CA 92863

NOTE:

1. FOR COMPLETE RIGHT OF WAY AND ACCURATE ACCESS DATA, SEE RIGHT OF WAY RECORD MAPS AT DISTRICT OFFICE.

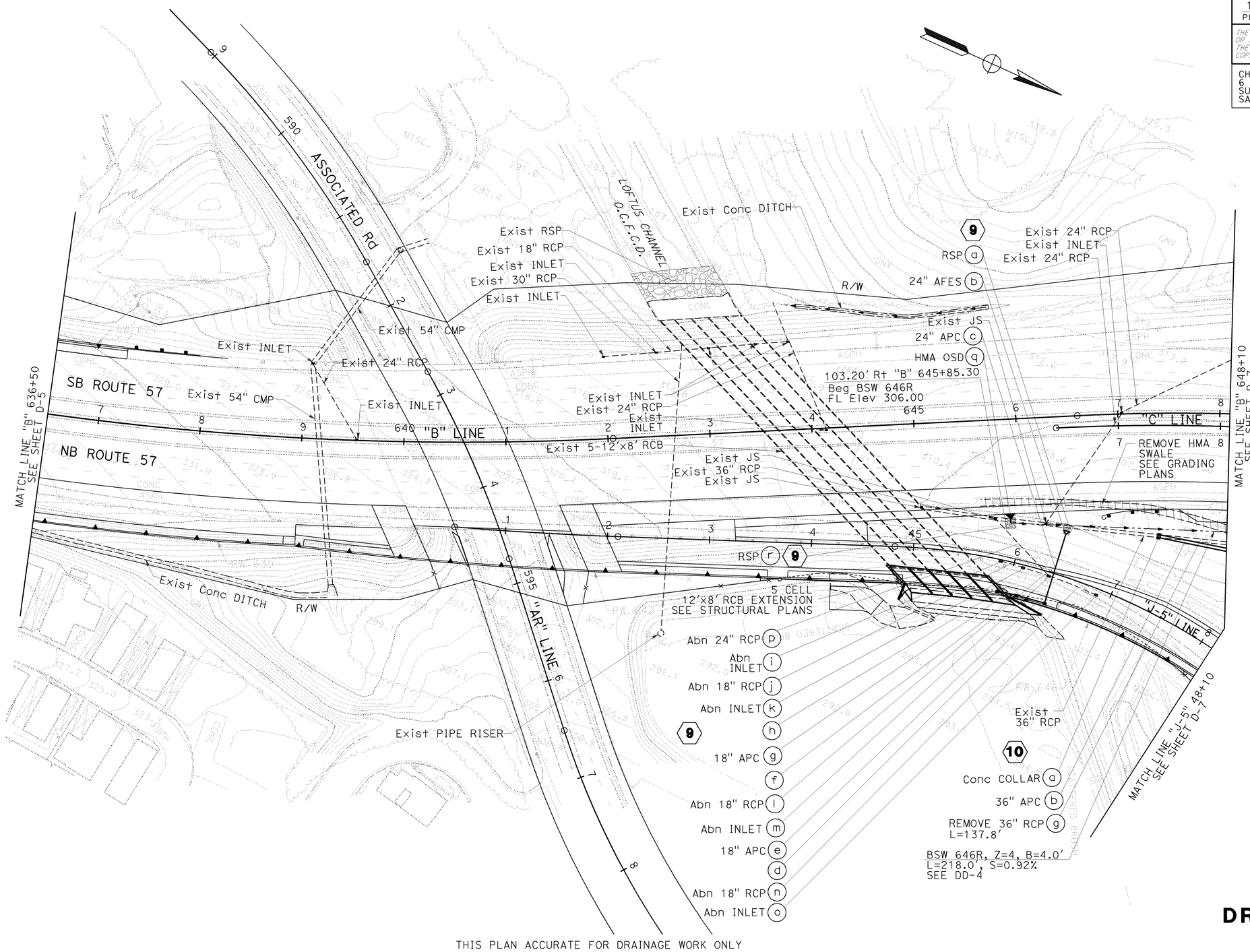

THIS PLAN ACCURATE FOR DRAINAGE WORK ONLY

DRAINAGE PLAN

SCALE: 1" = 50'

D-6

STATE OF CALIFORNIA - DEPARTMENT OF TRANSPORTATION
Caltrans

CONSULTANT FUNCTIONAL SUPERVISOR: THOMAS IONTA
CALCULATED-DESIGNED BY: DEANIE DING
CHECKED BY: ROBERT HENDERSON
REVISED BY
DATE REVISED

LAST REVISION 00-00-00
DATE PLOTTED => 25-JAN-2010
TIME PLOTTED => 11:12

Dist	COUNTY	ROUTE	POST MILES TOTAL PROJECT	SHEET No.	TOTAL SHEETS
12	Ora	57	18.4/20.9	119	856

REGISTERED CIVIL ENGINEER — 06-15-09 DATE

ROBERT M. HENDERSON No. C66736 Exp. 09/30/10 CIVIL — REGISTERED PROFESSIONAL ENGINEER — STATE OF CALIFORNIA

1-25-10
PLANS APPROVAL DATE

THE STATE OF CALIFORNIA OR ITS OFFICERS OR AGENTS SHALL NOT BE RESPONSIBLE FOR THE ACCURACY OR COMPLETENESS OF SCANNED COPIES OF THIS PLAN SHEET.

CH2M HILL
6 HUTTON CENTRE DRIVE,
SUITE 700
SANTA ANA, CA 92707

OCTA
550 S. MAIN STREET
ORANGE, CA 92863

NOTE:

1. FOR COMPLETE RIGHT OF WAY AND ACCURATE ACCESS DATA, SEE RIGHT OF WAY RECORD MAPS AT DISTRICT OFFICE.

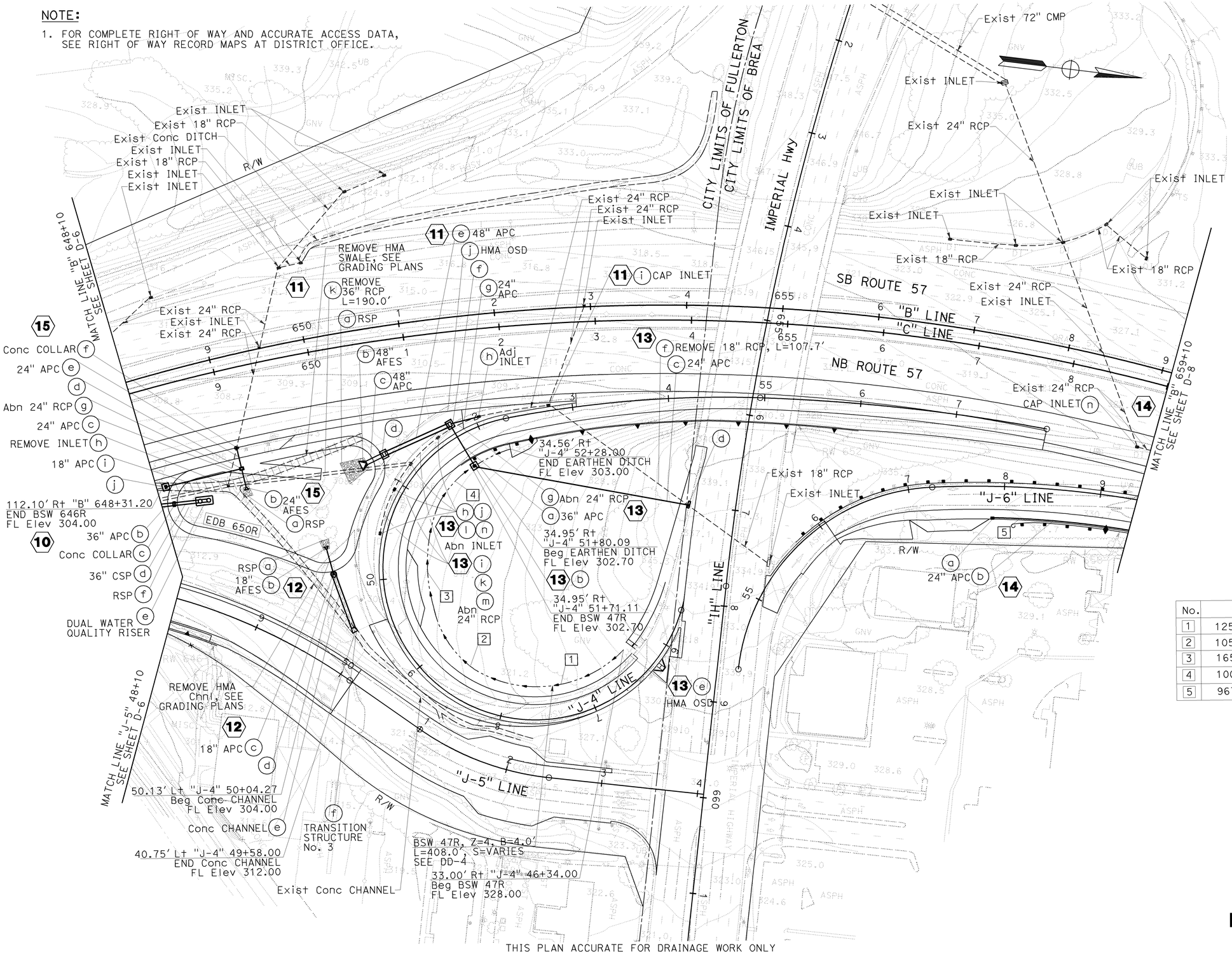

DRAINAGE CURVE DATA

No.	R	△	T	L
1	125.00′	77°06′05"	99.61′	168.21′
2	105.00′	43°38′03"	42.03′	79.96′
3	165.00′	36°59′27"	55.19′	106.53′
4	100.00′	30°45′39"	27.51′	53.69′
5	967.50′	8°47′46"	74.41′	148.53′

DRAINAGE PLAN

SCALE: 1" = 50′

D-7

REVISED BY | DATE REVISED
DEANIE DING | ROBERT HENDERSON
CALCULATED-DESIGNED BY | CHECKED BY
CONSULTANT FUNCTIONAL SUPERVISOR: THOMAS IONTA
STATE OF CALIFORNIA - DEPARTMENT OF TRANSPORTATION
Caltrans

LAST REVISION | DATE PLOTTED => 25-JAN-2010
00-00-00 | TIME PLOTTED => 11:12

BORDER LAST REVISED 4/11/2008 | RELATIVE BORDER SCALE IS IN INCHES 0 1 2 3 | USERNAME => trpierce | DGN FILE => c0F032ia007.dgn | CU 12220 | EA 0F0321

Dist	COUNTY	ROUTE	POST MILES TOTAL PROJECT	SHEET No.	TOTAL SHEETS
12	Ora	57	18.4/20.9	120	856

REGISTERED CIVIL ENGINEER — 06-15-09 DATE

ROBERT M. HENDERSON No. C66736 Exp. 09/30/10 CIVIL — REGISTERED PROFESSIONAL ENGINEER — STATE OF CALIFORNIA

1-25-10
PLANS APPROVAL DATE

THE STATE OF CALIFORNIA OR ITS OFFICERS OR AGENTS SHALL NOT BE RESPONSIBLE FOR THE ACCURACY OR COMPLETENESS OF SCANNED COPIES OF THIS PLAN SHEET.

CH2M HILL
6 HUTTON CENTRE DRIVE,
SUITE 700
SANTA ANA, CA 92707

OCTA
550 S. MAIN STREET
ORANGE, CA 92863

NOTE:

1. FOR COMPLETE RIGHT OF WAY AND ACCURATE ACCESS DATA, SEE RIGHT OF WAY RECORD MAPS AT DISTRICT OFFICE.

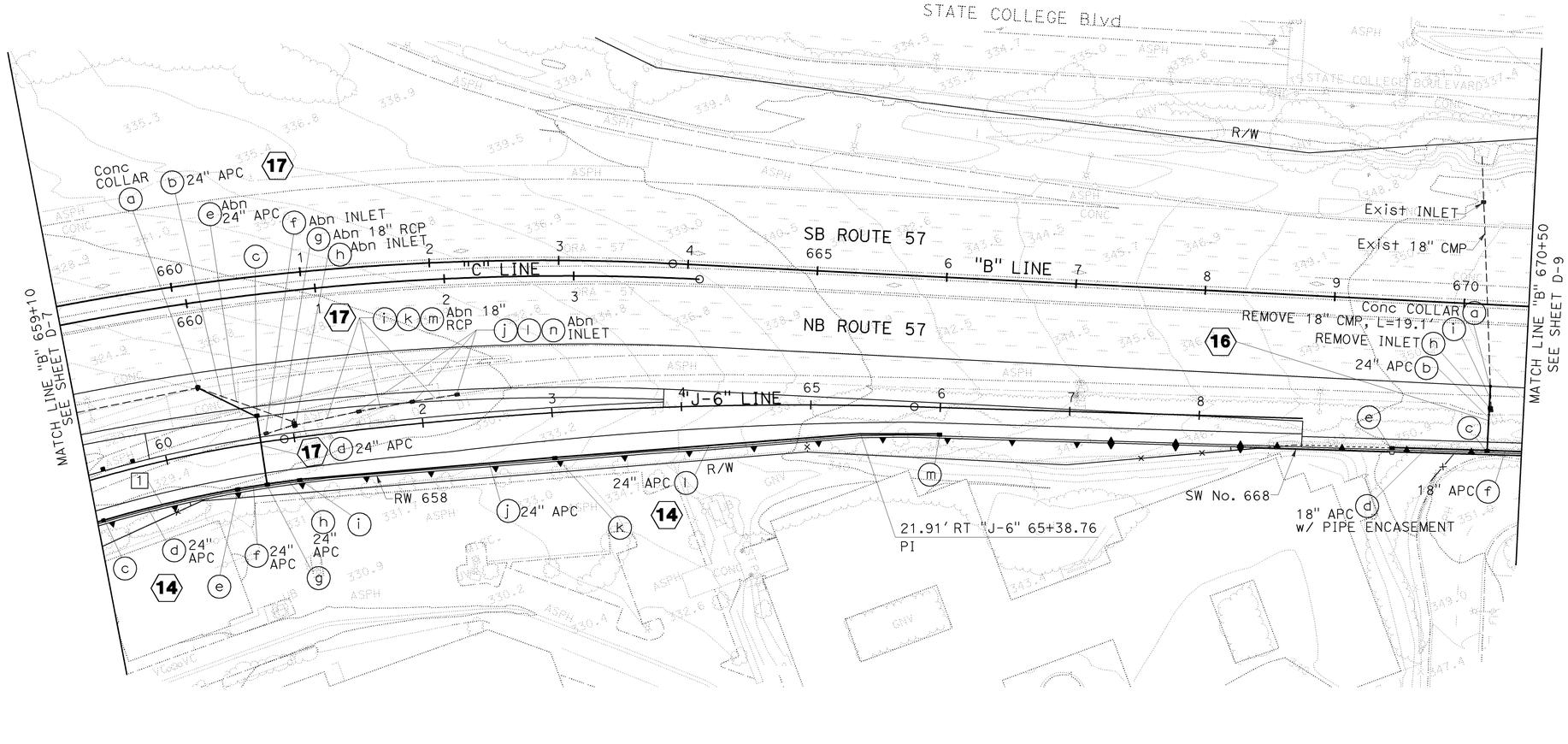

DRAINAGE CURVE DATA

No.	R	△	T	L
1	967.50′	06°12′44"	52.50′	104.90′

THIS PLAN ACCURATE FOR DRAINAGE WORK ONLY

DRAINAGE PLAN

SCALE: 1" = 50′

D-8

STATE OF CALIFORNIA - DEPARTMENT OF TRANSPORTATION
Caltrans
CONSULTANT FUNCTIONAL SUPERVISOR: THOMAS IONTA
CALCULATED-DESIGNED BY: DEANIE DING
CHECKED BY: ROBERT HENDERSON
REVISED BY | DATE REVISED

LAST REVISION | DATE PLOTTED => 25-JAN-2010
00-00-00 | TIME PLOTTED => 11:13

BORDER LAST REVISED 4/11/2008

RELATIVE BORDER SCALE IS IN INCHES 0 1 2 3

USERNAME => trpierce
DGN FILE => c0F032ia008.dgn

CU 12220

EA 0F0321

Dist	COUNTY	ROUTE	POST MILES TOTAL PROJECT	SHEET No.	TOTAL SHEETS
12	Ora	57	18.4/20.9	121	856

REGISTERED CIVIL ENGINEER — DATE: 06-15-09

ROBERT M. HENDERSON
No. C66736
Exp. 09/30/10
CIVIL
REGISTERED PROFESSIONAL ENGINEER
STATE OF CALIFORNIA

1-25-10
PLANS APPROVAL DATE

THE STATE OF CALIFORNIA OR ITS OFFICERS OR AGENTS SHALL NOT BE RESPONSIBLE FOR THE ACCURACY OR COMPLETENESS OF SCANNED COPIES OF THIS PLAN SHEET.

CH2M HILL
6 HUTTON CENTRE DRIVE,
SUITE 700
SANTA ANA, CA 92707

OCTA
550 S. MAIN STREET
ORANGE, CA 92863

NOTE:

1. FOR COMPLETE RIGHT OF WAY AND ACCURATE ACCESS DATA, SEE RIGHT OF WAY RECORD MAPS AT DISTRICT OFFICE.

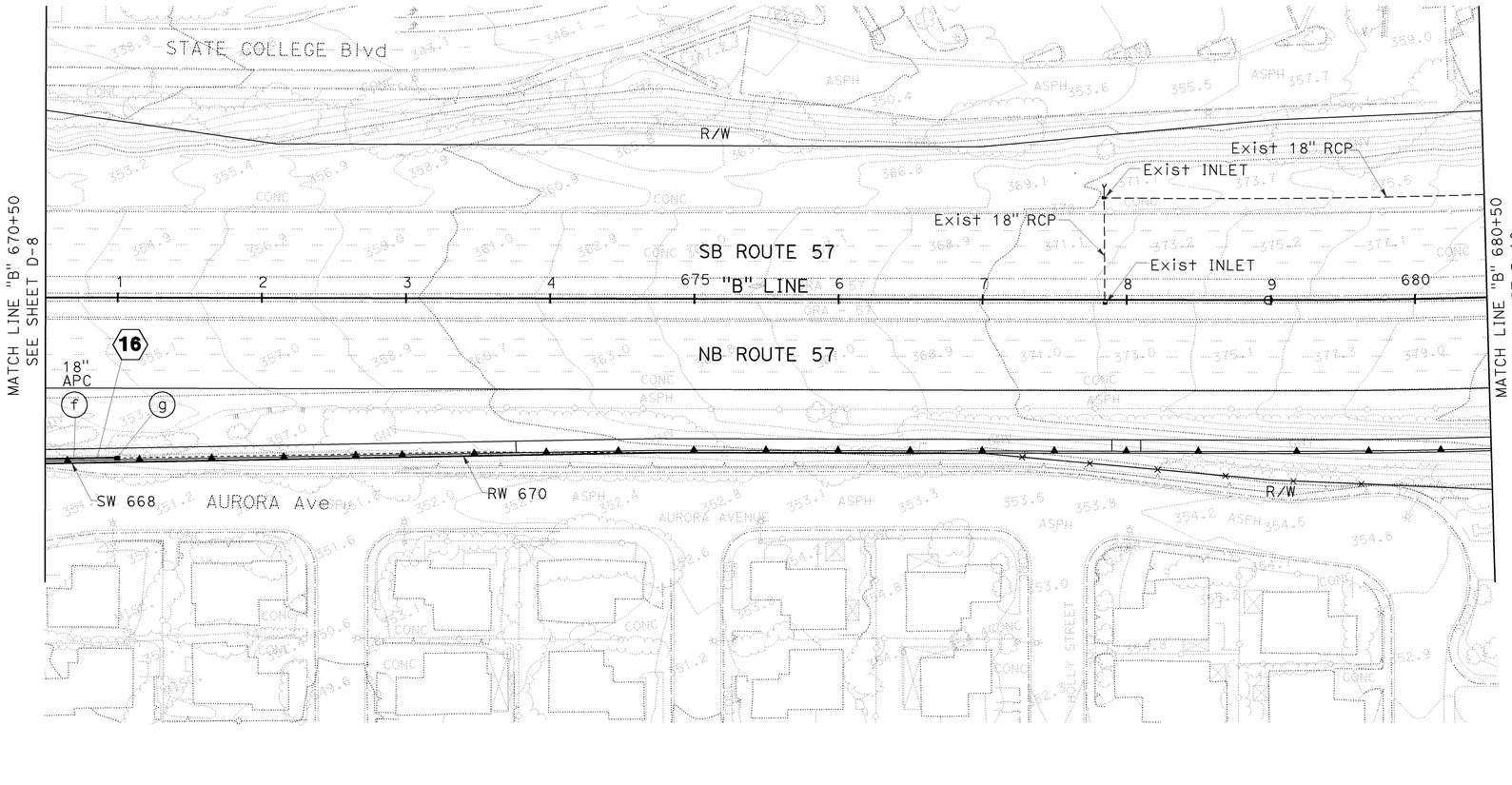

THIS PLAN ACCURATE FOR DRAINAGE WORK ONLY

DRAINAGE PLAN

SCALE: 1" = 50'

D-9

LAST REVISION 00-00-00
DATE PLOTTED => 25-JAN-2010
TIME PLOTTED => 11:13

REVISED BY | DATE REVISED
CALCULATED-DESIGNED BY: DEANIE DING
CHECKED BY: ROBERT HENDERSON
CONSULTANT FUNCTIONAL SUPERVISOR: THOMAS IONTA
STATE OF CALIFORNIA - DEPARTMENT OF TRANSPORTATION
Caltrans

BORDER LAST REVISED 4/11/2008

RELATIVE BORDER SCALE IS IN INCHES 0 1 2 3

USERNAME => trpierce
DGN FILE => c0F032ia009.dgn

CU 12220

EA 0F0321

Dist	COUNTY	ROUTE	POST MILES TOTAL PROJECT	SHEET No.	TOTAL SHEETS
12	Ora	57	18.4/20.9	122	856

REGISTERED CIVIL ENGINEER — 06-15-09 DATE

ROBERT M. HENDERSON No. C66736 Exp. 09/30/10 CIVIL — REGISTERED PROFESSIONAL ENGINEER — STATE OF CALIFORNIA

1-25-10
PLANS APPROVAL DATE

THE STATE OF CALIFORNIA OR ITS OFFICERS OR AGENTS SHALL NOT BE RESPONSIBLE FOR THE ACCURACY OR COMPLETENESS OF SCANNED COPIES OF THIS PLAN SHEET.

CH2M HILL
6 HUTTON CENTRE DRIVE,
SUITE 700
SANTA ANA, CA 92707

OCTA
550 S. MAIN STREET
ORANGE, CA 92863

NOTE:

1. FOR COMPLETE RIGHT OF WAY AND ACCURATE ACCESS DATA, SEE RIGHT OF WAY RECORD MAPS AT DISTRICT OFFICE.

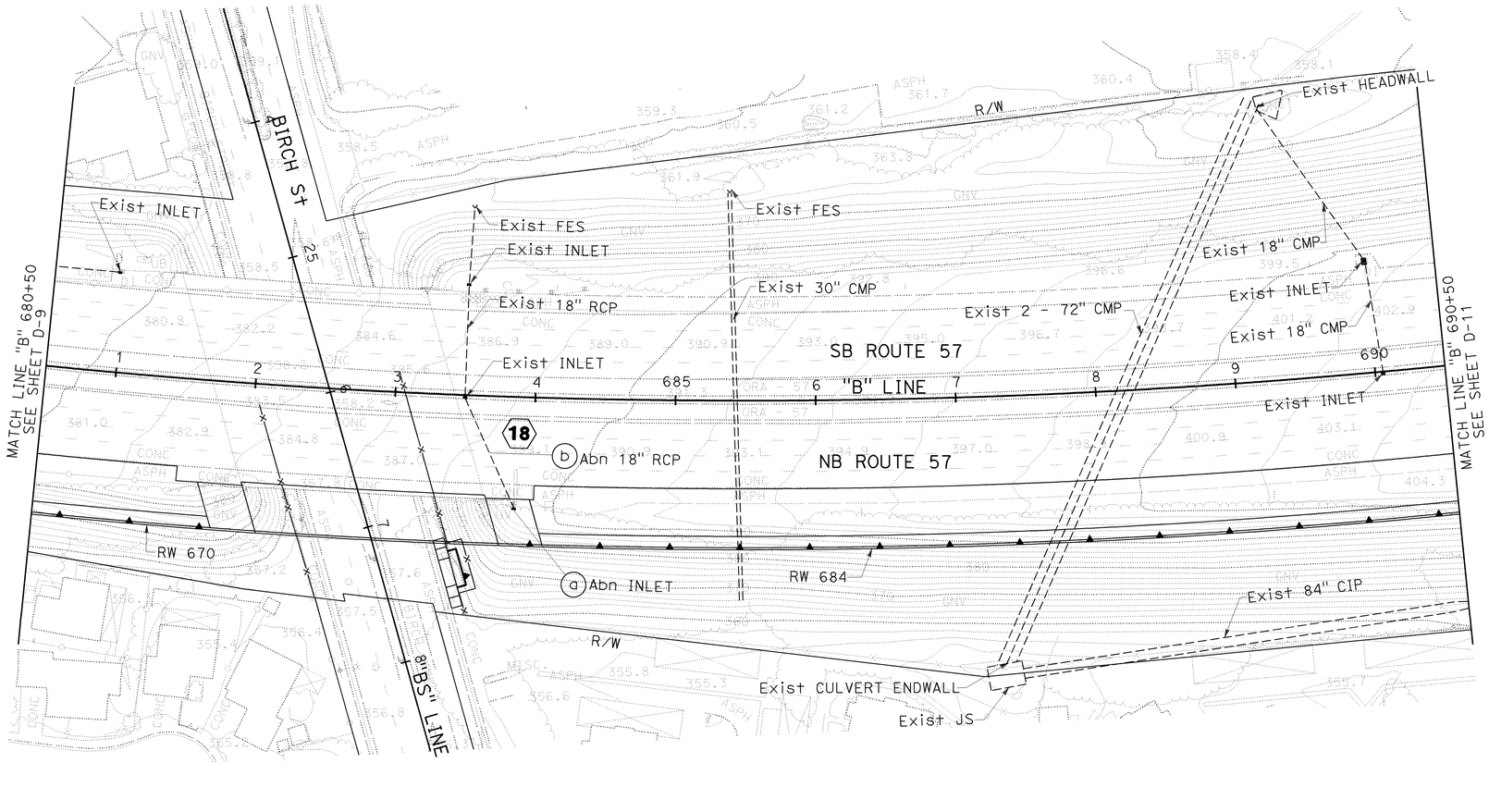

THIS PLAN ACCURATE FOR DRAINAGE WORK ONLY

DRAINAGE PLAN

SCALE: 1" = 50'

D-10

STATE OF CALIFORNIA - DEPARTMENT OF TRANSPORTATION — Caltrans

CONSULTANT FUNCTIONAL SUPERVISOR: THOMAS IONTA

CALCULATED-DESIGNED BY: DEANIE DING

CHECKED BY: ROBERT HENDERSON

REVISED BY | DATE REVISED

LAST REVISION | DATE PLOTTED => 25-JAN-2010
00-00-00 | TIME PLOTTED => 11:13

BORDER LAST REVISED 4/11/2008

RELATIVE BORDER SCALE IS IN INCHES 0 1 2 3

USERNAME => trpierce
DGN FILE => c0F032ia010.dgn

CU 12220

EA 0F0321

Dist	COUNTY	ROUTE	POST MILES TOTAL PROJECT	SHEET No.	TOTAL SHEETS
12	Ora	57	18.4/20.9	123	856

REGISTERED CIVIL ENGINEER — 06-15-09 DATE

ROBERT M. HENDERSON No. C66736 Exp. 09/30/10 CIVIL — REGISTERED PROFESSIONAL ENGINEER — STATE OF CALIFORNIA

1-25-10
PLANS APPROVAL DATE

THE STATE OF CALIFORNIA OR ITS OFFICERS OR AGENTS SHALL NOT BE RESPONSIBLE FOR THE ACCURACY OR COMPLETENESS OF SCANNED COPIES OF THIS PLAN SHEET.

CH2M HILL
6 HUTTON CENTRE DRIVE,
SUITE 700
SANTA ANA, CA 92707

OCTA
550 S. MAIN STREET
ORANGE, CA 92863

NOTE:

1. FOR COMPLETE RIGHT OF WAY AND ACCURATE ACCESS DATA, SEE RIGHT OF WAY RECORD MAPS AT DISTRICT OFFICE.

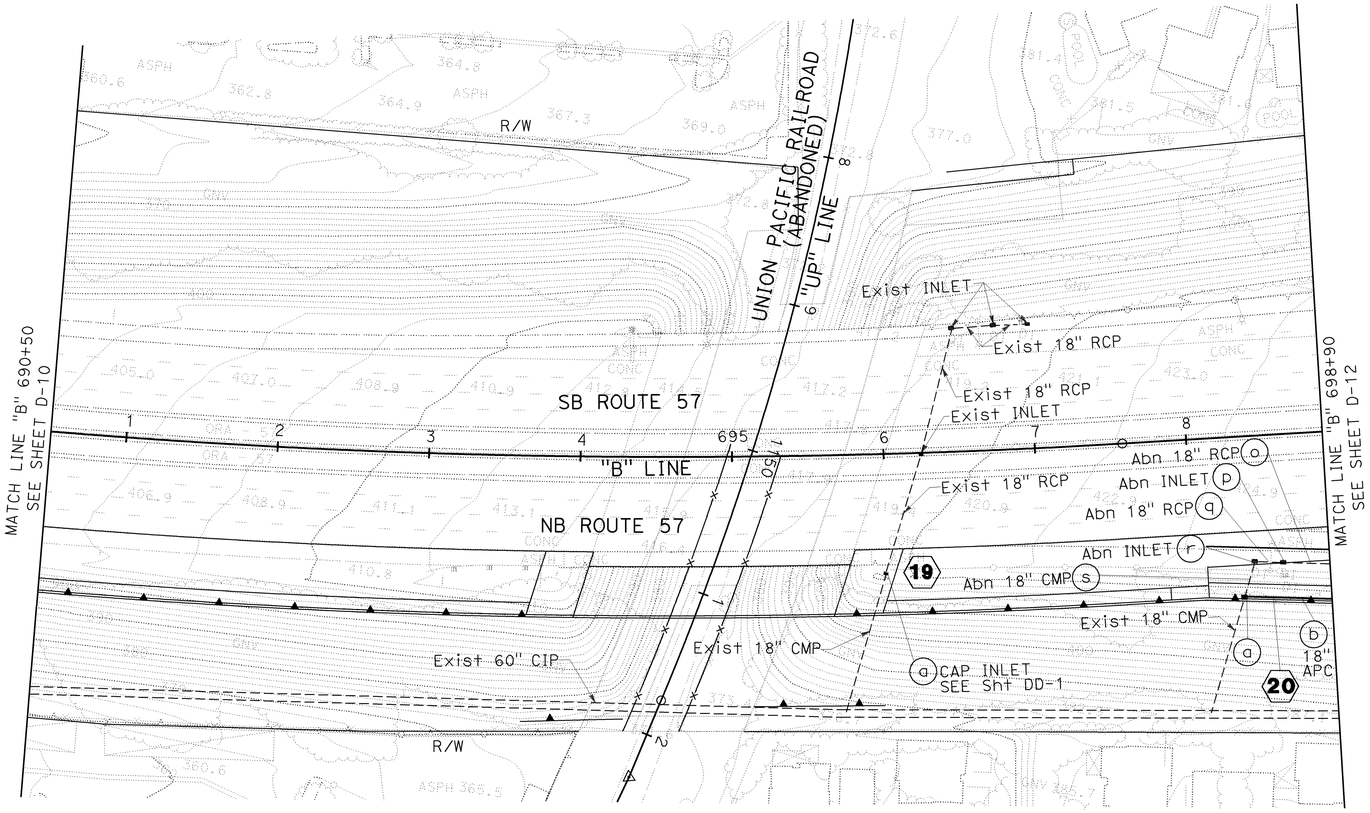

THIS PLAN ACCURATE FOR DRAINAGE WORK ONLY

DRAINAGE PLAN

SCALE: 1" = 50'

D-11

REVISED BY | DATE REVISED
DEANIE DING | ROBERT HENDERSON
CALCULATED-DESIGNED BY | CHECKED BY
CONSULTANT FUNCTIONAL SUPERVISOR: THOMAS IONTA
STATE OF CALIFORNIA - DEPARTMENT OF TRANSPORTATION
Caltrans

LAST REVISION | DATE PLOTTED => 25-JAN-2010
00-00-00 | TIME PLOTTED => 11:13

BORDER LAST REVISED 4/11/2008 | RELATIVE BORDER SCALE IS IN INCHES 0 1 2 3 | USERNAME => trpierce | DGN FILE => c0F032ia011.dgn | CU 12220 | EA 0F0321

NOTE:

1. FOR COMPLETE RIGHT OF WAY AND ACCURATE ACCESS DATA, SEE RIGHT OF WAY RECORD MAPS AT DISTRICT OFFICE.

Dist	COUNTY	ROUTE	POST MILES TOTAL PROJECT	SHEET No.	TOTAL SHEETS
12	Ora	57	18.4/20.9	124	856

REGISTERED CIVIL ENGINEER — 06-15-09 DATE

ROBERT M. HENDERSON No. C66736 Exp. 09/30/10 CIVIL — REGISTERED PROFESSIONAL ENGINEER — STATE OF CALIFORNIA

1-25-10
PLANS APPROVAL DATE

THE STATE OF CALIFORNIA OR ITS OFFICERS OR AGENTS SHALL NOT BE RESPONSIBLE FOR THE ACCURACY OR COMPLETENESS OF SCANNED COPIES OF THIS PLAN SHEET.

CH2M HILL
6 HUTTON CENTRE DRIVE,
SUITE 700
SANTA ANA, CA 92707

OCTA
550 S. MAIN STREET
ORANGE, CA 92863

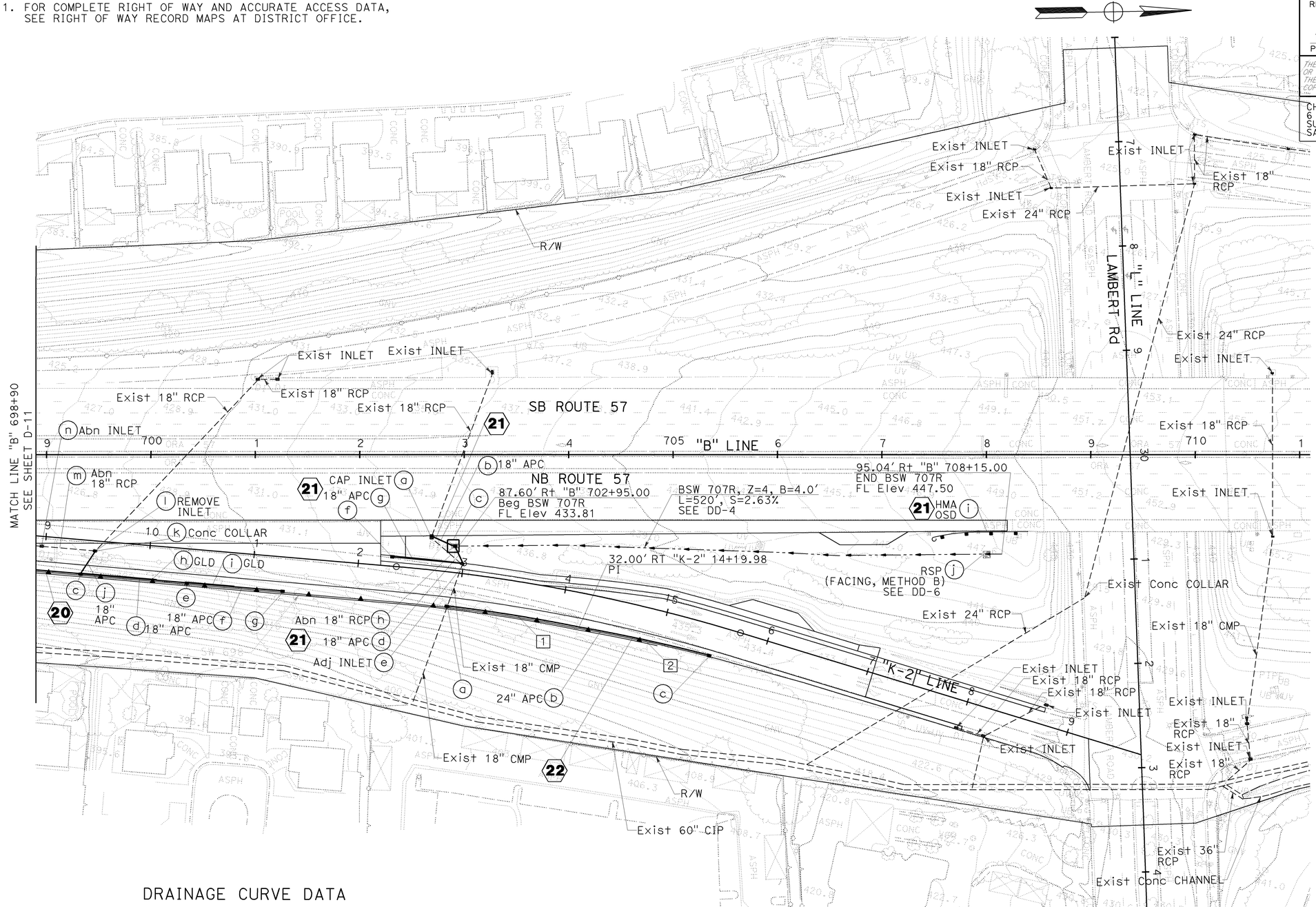

DRAINAGE CURVE DATA

No.	R	△	T	L
1	1567.50′	04°38′11"	63.46′	126.84′
2	1569.00′	04°36′12"	63.06′	126.06′

THIS PLAN ACCURATE FOR DRAINAGE WORK ONLY

DRAINAGE PLAN

SCALE: 1" = 50′

D-12

STATE OF CALIFORNIA - DEPARTMENT OF TRANSPORTATION
CONSULTANT FUNCTIONAL SUPERVISOR: THOMAS IONTA
CALCULATED-DESIGNED BY: DEANIE DING
CHECKED BY: ROBERT HENDERSON
REVISED BY | DATE REVISED

LAST REVISION | DATE PLOTTED => 25-JAN-2010
00-00-00 | TIME PLOTTED => 11:13

BORDER LAST REVISED 4/11/2008

RELATIVE BORDER SCALE IS IN INCHES 0 1 2 3

USERNAME => trpierce
DGN FILE => c0F032ia012.dgn

CU 12220

EA 0F0321

Dist	COUNTY	ROUTE	POST MILES TOTAL PROJECT	SHEET No.	TOTAL SHEETS
12	Ora	57	18.4/20.9	125	856

REGISTERED CIVIL ENGINEER — 06/15/09 DATE

ROBERT M. HENDERSON No. C66736 Exp. 09/30/10 CIVIL — REGISTERED PROFESSIONAL ENGINEER — STATE OF CALIFORNIA

1-25-10
PLANS APPROVAL DATE

THE STATE OF CALIFORNIA OR ITS OFFICERS OR AGENTS SHALL NOT BE RESPONSIBLE FOR THE ACCURACY OR COMPLETENESS OF SCANNED COPIES OF THIS PLAN SHEET.

CH2M HILL
6 HUTTON CENTRE DRIVE,
SUITE 700
SANTA ANA, CA 92707

OCTA
550 S. MAIN STREET
ORANGE, CA 92863

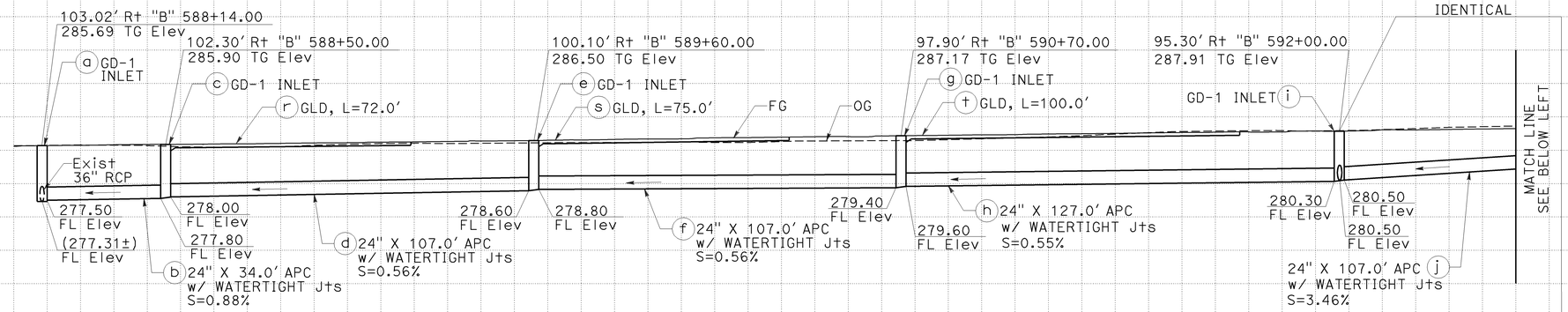

GENERAL DRAINAGE PROFILE NOTES:

1. RSP SHALL BE FACING, METHOD B UNLESS OTHERWISE NOTED, SEE Sht DD-6
2. GLD LENGTH SHOWN IS THE MINIMUM LENGTH REQUIRED
3. FOR GD-1 INLETS, SEE Sht DD-1

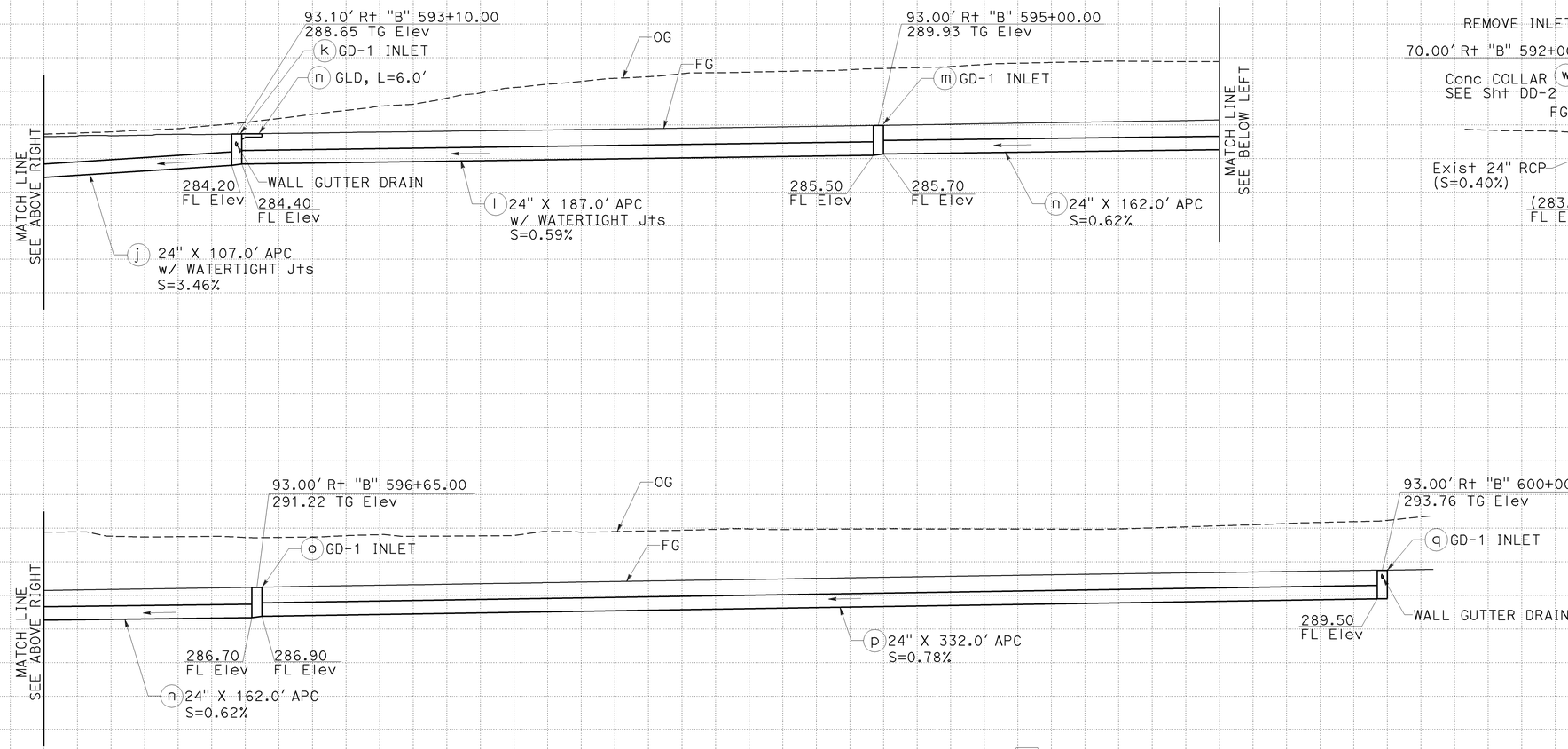

DRAINAGE SYSTEM No. 1

DRAINAGE PROFILE

SCALE: Horiz: 1" = 20′
Vert: 1" = 10′

DP-1

REVISED BY | DATE REVISED
DEANIE DING | ROBERT HENDERSON
CALCULATED-DESIGNED BY | CHECKED BY
THOMAS IONTA
CONSULTANT FUNCTIONAL SUPERVISOR
STATE OF CALIFORNIA - DEPARTMENT OF TRANSPORTATION
Caltrans

LAST REVISION | DATE PLOTTED => 25-JAN-2010
00-00-00 | TIME PLOTTED => 11:14

BORDER LAST REVISED 4/11/2008 | RELATIVE BORDER SCALE IS IN INCHES 0 1 2 3 | USERNAME => trpierce | DGN FILE => c0F032ib001.dgn | CU 12220 | EA 0F0321

Dist	COUNTY	ROUTE	POST MILES TOTAL PROJECT	SHEET No.	TOTAL SHEETS
12	Ora	57	18.4/20.9	126	856

REGISTERED CIVIL ENGINEER — 06/15/09 DATE

ROBERT M. HENDERSON No. C66736 Exp. 09/30/10 CIVIL — REGISTERED PROFESSIONAL ENGINEER — STATE OF CALIFORNIA

1-25-10
PLANS APPROVAL DATE

THE STATE OF CALIFORNIA OR ITS OFFICERS OR AGENTS SHALL NOT BE RESPONSIBLE FOR THE ACCURACY OR COMPLETENESS OF SCANNED COPIES OF THIS PLAN SHEET.

CH2M HILL
6 HUTTON CENTRE DRIVE,
SUITE 700
SANTA ANA, CA 92707

OCTA
550 S. MAIN STREET
ORANGE, CA 92863

IDENTICAL

22.00′ Rt "I-7" 84+84.00
284.33 TG Elev
(a) G1 INLET

22.00′ Lt "I-7" 85+35.00
284.67 TG Elev
(c) G2 INLET

83.48′ Lt "I-7" 585+88.00
285.01 TG Elev
(e) G1 INLET

FG

280.30 FL Elev — (b) 18" X 48.0′ APC w/ WATERTIGHT Jts S=0.42%

280.10 FL Elev — (g)

280.10 FL Elev

281.20 FL Elev — (d) 18" X 48.2′ APC w/ WATERTIGHT Jts S=2.28%

OG

R/W LINE

RW 581

(j) REMOVE INLET

FG

OG

18" x 3.1′ Bit Ctd CSP RISER w/ 2-45.0° CSP ELBOWS (f)

(i) REMOVE 18" CMP RISER L=3.5′

Exist 54" RCP

(270.60±) FL Elev

Exist 36" RCP (S=1.36%)

(271.04±) FL Elev

DRAINAGE SYSTEM No. 2

93.00′ Rt "B" 612+49.29
305.35 TG Elev
(a) GD-1 INLET

93.00′ Rt "B" 613+00.00
306.26 TG Elev
(c) GD-1 INLET

(d) GLD, L=6.0′

FG

OG

Exist 24" CMP

(299.21±) FL Elev

299.30 FL Elev

301.80 FL Elev

(b) 24" X 47.8′ APC S=5.24%

DRAINAGE SYSTEM No. 3

IDENTICAL

93.00′ Rt "B" 603+34.00
296.63 TG Elev
(m) GD-1 INLET

OG

FG

93.00′ Rt "B" 604+30.00
297.14 TG Elev
(k) GD-1 INLET

(b)

93.00′ Rt "B" 605+00.00
297.67 TG Elev
(c) GD-1 INLET

298.13 TG Elev
(e) GD-1 INLET

MATCH LINE SEE BELOW LEFT

293.77 FL Elev

(l) 18" X 93.0′ APC w/WATERTIGHT Jts S=0.25% w/ PIPE ENCASEMENT SEE Sht DD-4

293.54 FL Elev

293.52 FL Elev

WALL GUTTER DRAIN

293.35 FL Elev

(j) 18" X 67.0′ APC w/WATERTIGHT Jts S=0.25%

293.35 FL Elev

293.30 FL Elev

293.60 FL Elev

293.80 FL Elev

(d) 24" X 57.0′ APC S=0.44%

(f) 24" X 321.0′ APC S=0.69%

DRAINAGE SYSTEM No. 4

IDENTICAL

MATCH LINE SEE ABOVE RIGHT

OG

FG

93.00′ Rt "B" 608+84.00
300.52 TG Elev
(g) GD-1 INLET

(o) GLD, L=6.0′

93.00′ Rt "B" 609+38.00
300.98 TG Elev
(i) GD-1 INLET

OG

(n) GLD, L=9.0′

296.00 FL Elev

296.20 FL Elev

296.70 FL Elev

(f) 24" X 321.0′ APC S=0.69%

(h) 18" X 51.0′ APC S=0.98%

REMOVE INLET (a)

70.00′ Rt "B" 605+00.00

RW 604

Conc COLLAR (x) SEE Sht DD-2

(c)

FG/OG

OG

Exist 24" RCP (S=0.30%)

(293.25±) FL Elev

293.35 FL Elev

24" X 20.5′ APC S=0.24% (b)

293.30 FL Elev

291.45 TF Elev

DRAINAGE SYSTEM No. 4

DRAINAGE PROFILE

SCALE: Horiz: 1" = 20′
Vert: 1" = 10′

DP-2

STATION			TOTAL
CY	Exc		
	Emb		

REVISED BY | DATE REVISED

DEANIE DING — CALCULATED-DESIGNED BY

ROBERT HENDERSON — CHECKED BY

THOMAS IONTA — CONSULTANT FUNCTIONAL SUPERVISOR

STATE OF CALIFORNIA - DEPARTMENT OF TRANSPORTATION

Caltrans

LAST REVISION | DATE PLOTTED => 25-JAN-2010 | TIME PLOTTED => 11:14

00-00-00

BORDER LAST REVISED 4/11/2008 | RELATIVE BORDER SCALE IS IN INCHES 0 1 2 3 | USERNAME => trpierce | DGN FILE => c0F032ib002.dgn | CU 12220 | EA 0F0321

Dist	COUNTY	ROUTE	POST MILES TOTAL PROJECT	SHEET No.	TOTAL SHEETS
12	Ora	57	18.4/20.9	127	856

Robert M. Henderson — 06/15/09
REGISTERED CIVIL ENGINEER — DATE

ROBERT M. HENDERSON No. C66736 Exp. 09/30/10 CIVIL — REGISTERED PROFESSIONAL ENGINEER — STATE OF CALIFORNIA

1-25-10
PLANS APPROVAL DATE

THE STATE OF CALIFORNIA OR ITS OFFICERS OR AGENTS SHALL NOT BE RESPONSIBLE FOR THE ACCURACY OR COMPLETENESS OF SCANNED COPIES OF THIS PLAN SHEET.

CH2M HILL
6 HUTTON CENTRE DRIVE,
SUITE 700
SANTA ANA, CA 92707

OCTA
550 S. MAIN STREET
ORANGE, CA 92863

DRAINAGE SYSTEM No. 3A

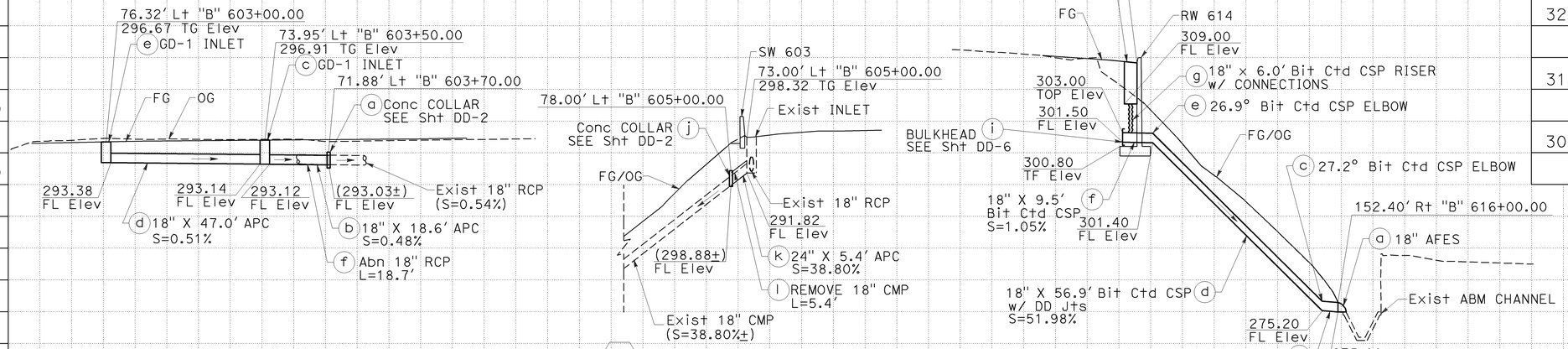

DRAINAGE SYSTEM No. 5

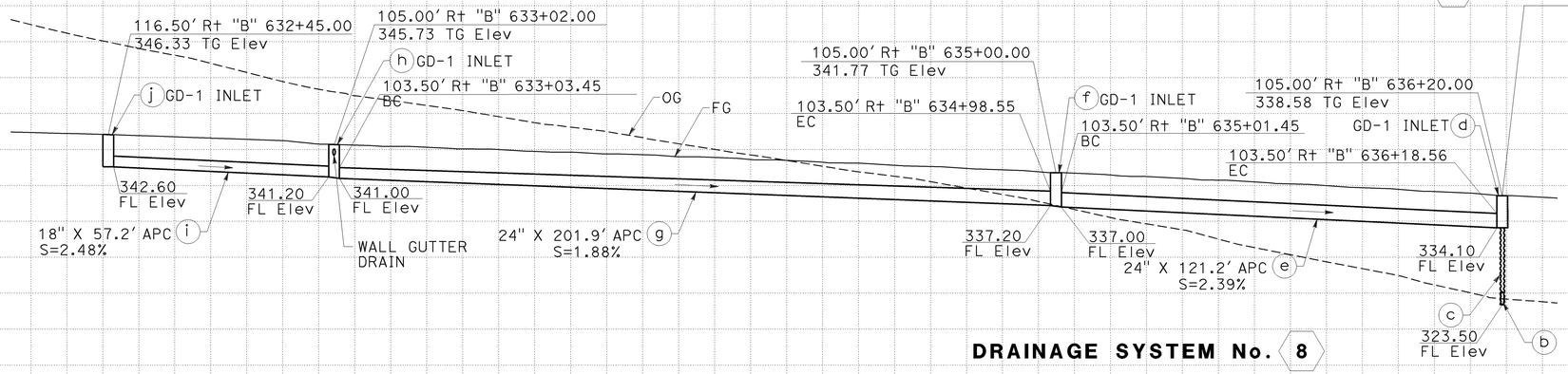

DRAINAGE SYSTEM No. 8

DRAINAGE SYSTEM No. 9

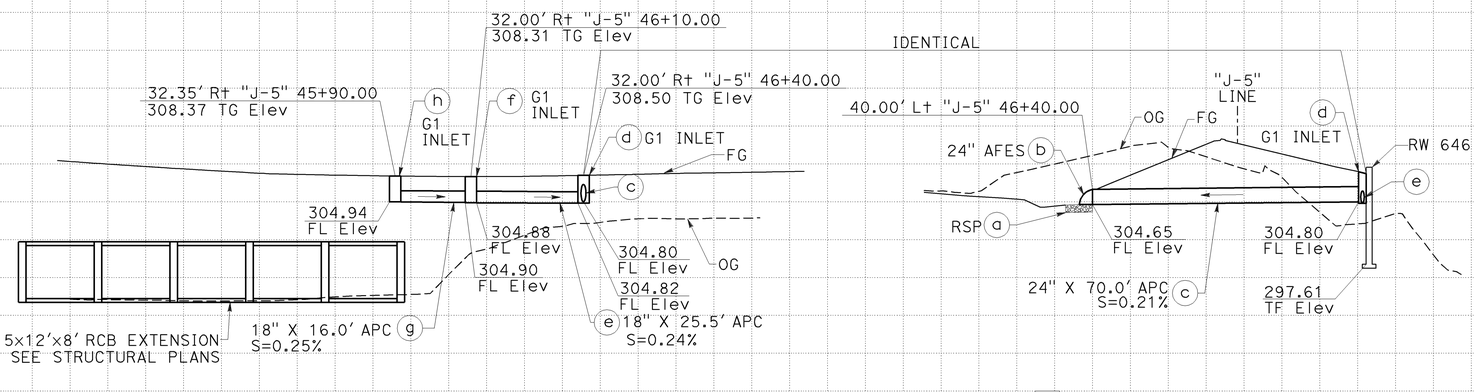

DRAINAGE PROFILE

SCALE: Horiz: 1" = 20'
Vert: 1" = 10'

DP-3

DATE PLOTTED => 25-JAN-2010
TIME PLOTTED => 08:20

LAST REVISION 00-00-00

REVISED BY | DATE REVISED

DEANIE DING — CALCULATED-DESIGNED BY
ROBERT HENDERSON — CHECKED BY
THOMAS IONTA — CONSULTANT FUNCTIONAL SUPERVISOR
STATE OF CALIFORNIA - DEPARTMENT OF TRANSPORTATION
Caltrans

BORDER LAST REVISED 4/11/2008

RELATIVE BORDER SCALE IS IN INCHES 0 1 2 3

USERNAME => trmnguye
DGN FILE => c0F032ib003.dgn

CU 12220

EA 0F0321

Dist	COUNTY	ROUTE	POST MILES TOTAL PROJECT	SHEET No.	TOTAL SHEETS
12	Ora	57	18.4/20.9	128	856

REGISTERED CIVIL ENGINEER — 06/15/09 DATE

ROBERT M. HENDERSON No. C66736 Exp 09/30/10 CIVIL — REGISTERED PROFESSIONAL ENGINEER — STATE OF CALIFORNIA

1-25-10
PLANS APPROVAL DATE

THE STATE OF CALIFORNIA OR ITS OFFICERS OR AGENTS SHALL NOT BE RESPONSIBLE FOR THE ACCURACY OR COMPLETENESS OF SCANNED COPIES OF THIS PLAN SHEET.

CH2M HILL
6 HUTTON CENTRE DRIVE,
SUITE 700
SANTA ANA, CA 92707

OCTA
550 S. MAIN STREET
ORANGE, CA 92863

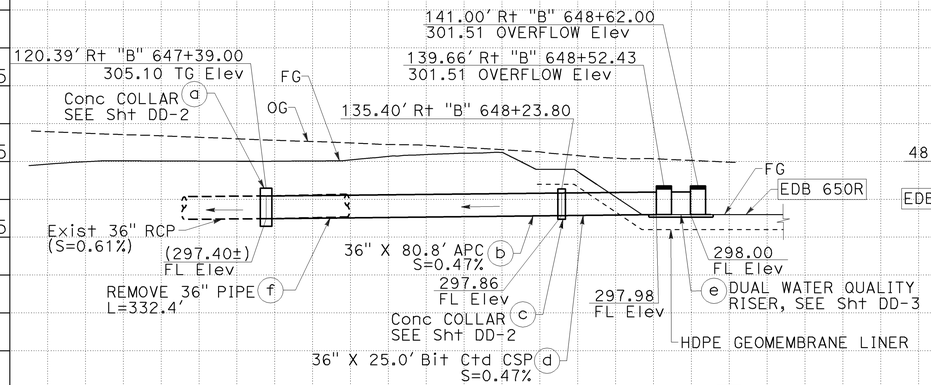

DRAINAGE SYSTEM No. 10

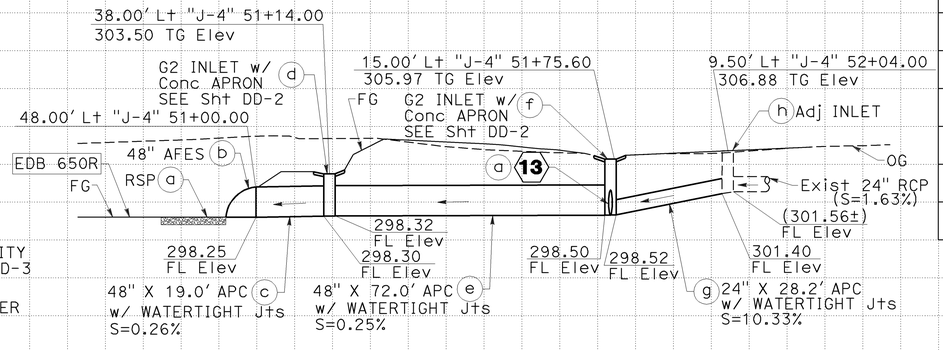

DRAINAGE SYSTEM No. 11

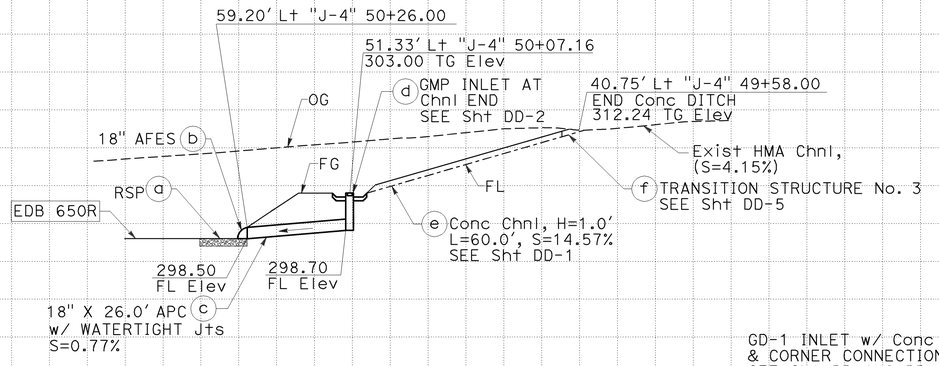

DRAINAGE SYSTEM No. 12

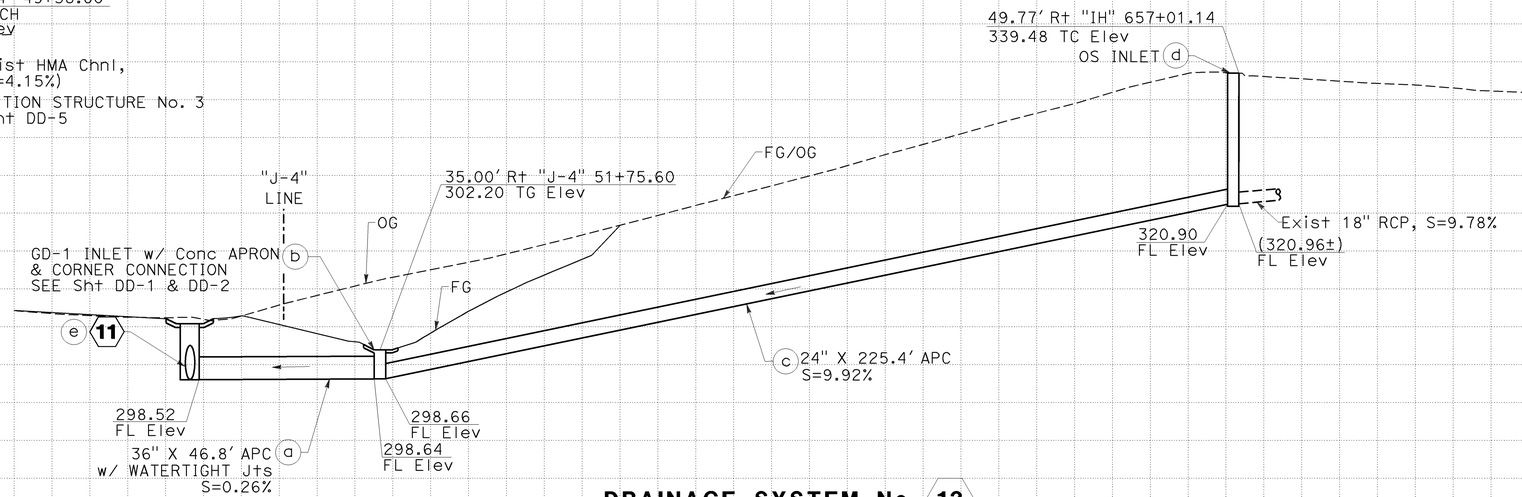

DRAINAGE SYSTEM No. 13

DRAINAGE PROFILE

SCALE: Horiz: 1" = 20'
Vert: 1" = 10'

DP-4

REVISED BY — DEANIE DING
DATE REVISED — ROBERT HENDERSON
CALCULATED-DESIGNED BY
CHECKED BY
CONSULTANT FUNCTIONAL SUPERVISOR — THOMAS IONTA
STATE OF CALIFORNIA - DEPARTMENT OF TRANSPORTATION

LAST REVISION 00-00-00
DATE PLOTTED => 25-JAN-2010
TIME PLOTTED => 08:21

BORDER LAST REVISED 4/11/2008
RELATIVE BORDER SCALE IS IN INCHES 0 1 2 3
USERNAME => trmnguye
DGN FILE => c0F0321b004.dgn
CU 12220
EA 0F0321

Dist	COUNTY	ROUTE	POST MILES TOTAL PROJECT	SHEET No.	TOTAL SHEETS
12	Ora	57	18.4/20.9	129	856

Robert M. Henderson 06/15/09
REGISTERED CIVIL ENGINEER DATE

ROBERT M. HENDERSON No. C66736 Exp. 09/30/10 CIVIL — REGISTERED PROFESSIONAL ENGINEER — STATE OF CALIFORNIA

1-25-10
PLANS APPROVAL DATE

THE STATE OF CALIFORNIA OR ITS OFFICERS OR AGENTS SHALL NOT BE RESPONSIBLE FOR THE ACCURACY OR COMPLETENESS OF SCANNED COPIES OF THIS PLAN SHEET.

CH2M HILL
6 HUTTON CENTRE DRIVE,
SUITE 700
SANTA ANA, CA 92707

OCTA
550 S. MAIN STREET
ORANGE, CA 92863

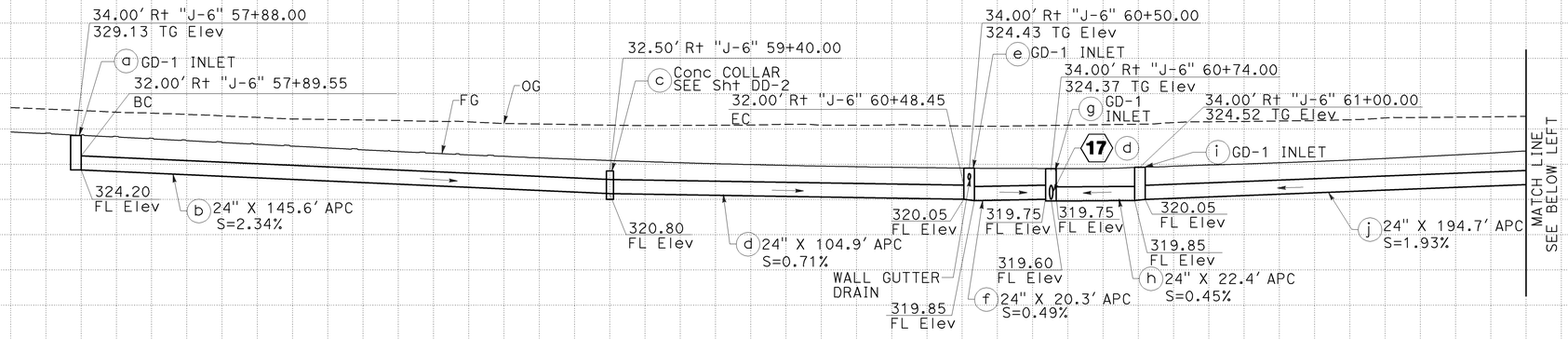

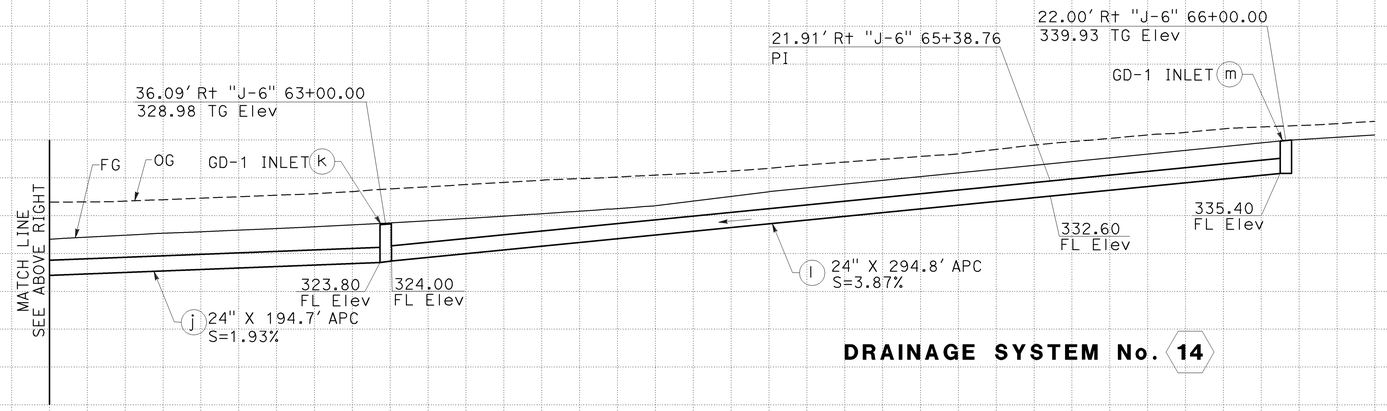

DRAINAGE SYSTEM No. 14

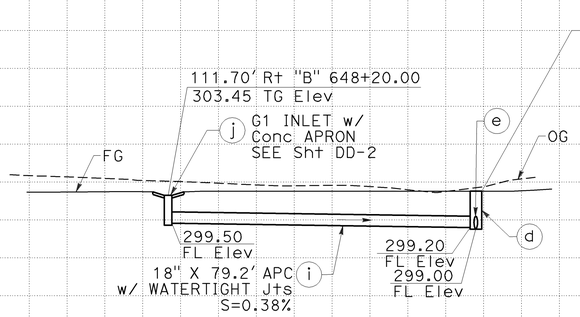

IDENTICAL

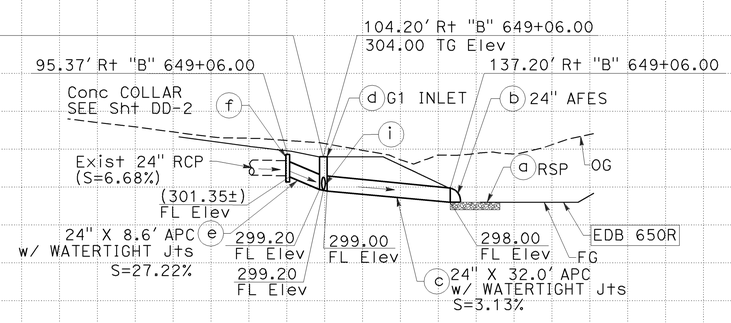

DRAINAGE SYSTEM No. 15

DRAINAGE PROFILE

SCALE: Horiz: 1" = 20'
Vert: 1" = 10'

DP-5

STATION		TOTAL
CY	Exc	
	Emb	

REVISED BY | DATE REVISED

DEANIE DING — CALCULATED-DESIGNED BY
ROBERT HENDERSON — CHECKED BY
THOMAS IONTA — CONSULTANT FUNCTIONAL SUPERVISOR

STATE OF CALIFORNIA - DEPARTMENT OF TRANSPORTATION
Caltrans

LAST REVISION DATE PLOTTED => 25-JAN-2010
00-00-00 TIME PLOTTED => 08:22

BORDER LAST REVISED 4/11/2008 | RELATIVE BORDER SCALE IS IN INCHES 0 1 2 3 | USERNAME => trmnguye | DGN FILE => c0F032ib005.dgn | CU 12220 | EA 0F0321

Dist	COUNTY	ROUTE	POST MILES TOTAL PROJECT	SHEET No.	TOTAL SHEETS
12	Ora	57	18.4/20.9	130	856

06/15/09
REGISTERED CIVIL ENGINEER — DATE

ROBERT M. HENDERSON No. C66736 Exp. 09/30/10 CIVIL — REGISTERED PROFESSIONAL ENGINEER — STATE OF CALIFORNIA

1-25-10
PLANS APPROVAL DATE

THE STATE OF CALIFORNIA OR ITS OFFICERS OR AGENTS SHALL NOT BE RESPONSIBLE FOR THE ACCURACY OR COMPLETENESS OF SCANNED COPIES OF THIS PLAN SHEET.

CH2M HILL
6 HUTTON CENTRE DRIVE,
SUITE 700
SANTA ANA, CA 92707

OCTA
550 S. MAIN STREET
ORANGE, CA 92863

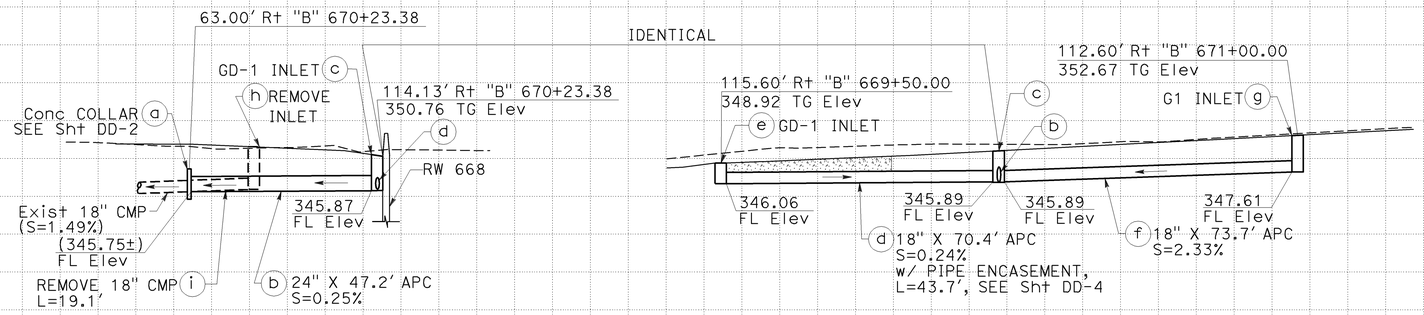

DRAINAGE SYSTEM No. 16

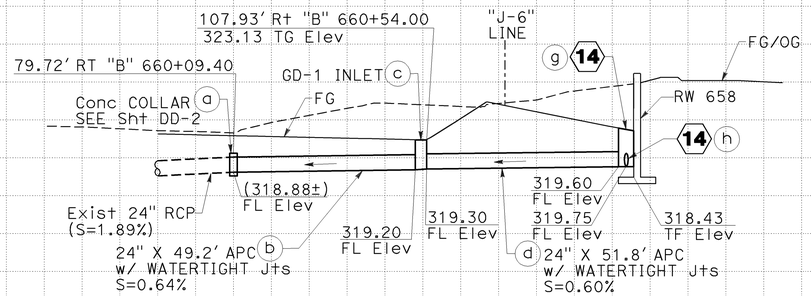

DRAINAGE SYSTEM No. 17

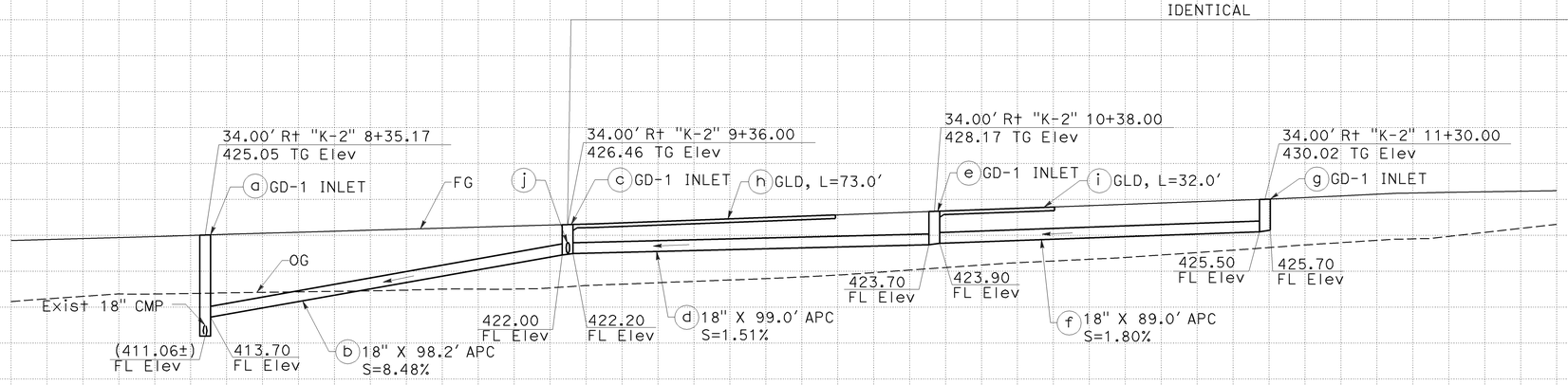

DRAINAGE SYSTEM No. 20

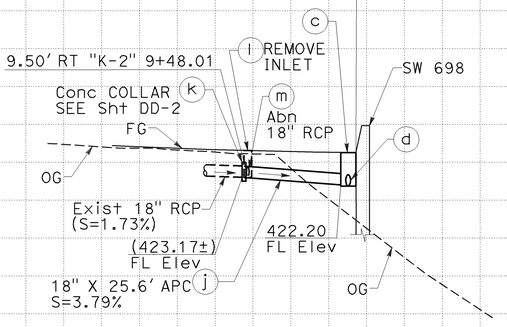

DRAINAGE PROFILE

SCALE: Horiz: 1" = 20'
Vert: 1" = 10'

DP-6

REVISED BY: DEANIE DING
DATE REVISED:
CALCULATED-DESIGNED BY: ROBERT HENDERSON
CHECKED BY: THOMAS IONTA
CONSULTANT FUNCTIONAL SUPERVISOR
STATE OF CALIFORNIA - DEPARTMENT OF TRANSPORTATION
Caltrans

LAST REVISION DATE PLOTTED => 25-JAN-2010
00-00-00 TIME PLOTTED => 08:22

BORDER LAST REVISED 4/11/2008
RELATIVE BORDER SCALE IS IN INCHES 0 1 2 3
USERNAME => trmnguye
DGN FILE => c0F032ib006.dgn
CU 12220
EA 0F0321

Dist	COUNTY	ROUTE	POST MILES TOTAL PROJECT	SHEET No.	TOTAL SHEETS
12	Ora	57	18.4/20.9	131	856

REGISTERED CIVIL ENGINEER — 06/15/09 DATE

ROBERT M. HENDERSON No. C66736 Exp. 09/30/10 CIVIL — REGISTERED PROFESSIONAL ENGINEER — STATE OF CALIFORNIA

1-25-10
PLANS APPROVAL DATE

THE STATE OF CALIFORNIA OR ITS OFFICERS OR AGENTS SHALL NOT BE RESPONSIBLE FOR THE ACCURACY OR COMPLETENESS OF SCANNED COPIES OF THIS PLAN SHEET.

CH2M HILL
6 HUTTON CENTRE DRIVE,
SUITE 700
SANTA ANA, CA 92707

OCTA
550 S. MAIN STREET
ORANGE, CA 92863

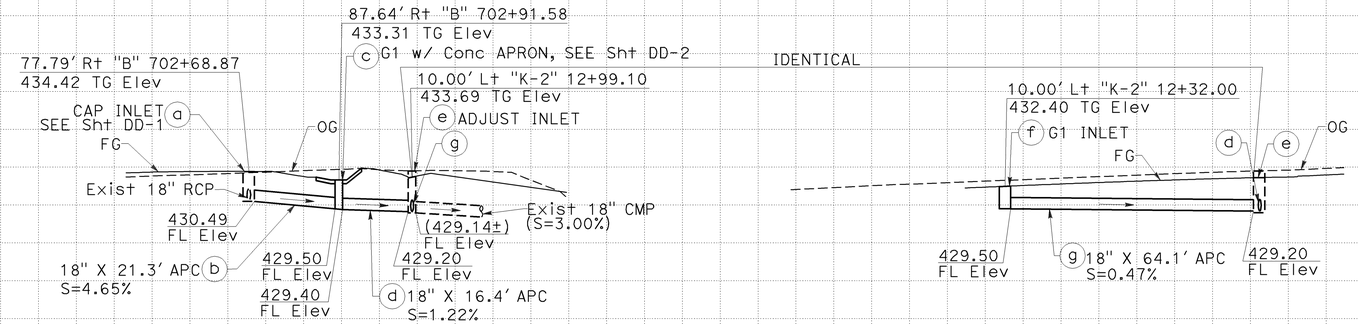

DRAINAGE SYSTEM No. 21

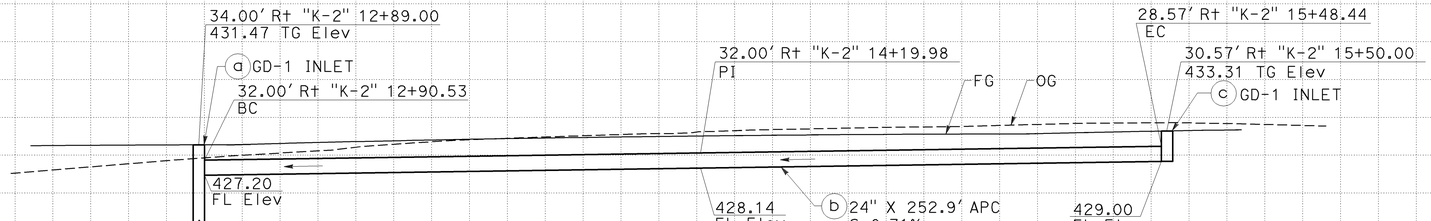

DRAINAGE SYSTEM No. 22

DRAINAGE PROFILE

SCALE: Horiz: 1" = 20'
Vert: 1" = 10'

DP-7

DEANIE DING — CALCULATED-DESIGNED BY
ROBERT HENDERSON — CHECKED BY
THOMAS IONTA — CONSULTANT FUNCTIONAL SUPERVISOR
STATE OF CALIFORNIA - DEPARTMENT OF TRANSPORTATION — Caltrans

REVISED BY | DATE REVISED

LAST REVISION — DATE PLOTTED => 25-JAN-2010 — TIME PLOTTED => 08:24 — 00-00-00

BORDER LAST REVISED 4/11/2008 — RELATIVE BORDER SCALE IS IN INCHES 0 1 2 3

USERNAME => trmnguye
DGN FILE => c0F032ib007.dgn

CU 12220 — EA 0F0321

Dist	COUNTY	ROUTE	POST MILES TOTAL PROJECT	SHEET No.	TOTAL SHEETS
12	Ora	57	18.4/20.9	132	856

REGISTERED CIVIL ENGINEER — 06-15-09 DATE

ROBERT M. HENDERSON No. C66736 Exp. 09/30/10 CIVIL — REGISTERED PROFESSIONAL ENGINEER — STATE OF CALIFORNIA

1-25-10
PLANS APPROVAL DATE

THE STATE OF CALIFORNIA OR ITS OFFICERS OR AGENTS SHALL NOT BE RESPONSIBLE FOR THE ACCURACY OR COMPLETENESS OF SCANNED COPIES OF THIS PLAN SHEET.

CH2M HILL
6 HUTTON CENTRE DRIVE,
SUITE 700
SANTA ANA, CA 92707

OCTA
550 S. MAIN STREET
ORANGE, CA 92863

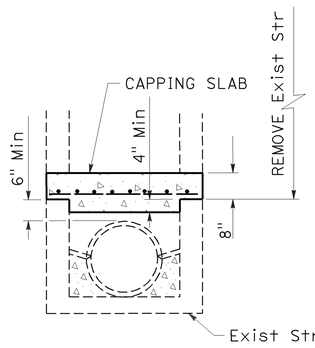

SECTION B-B

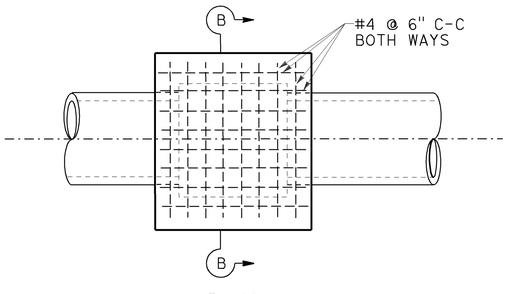

PLAN

CAP INLET DETAIL

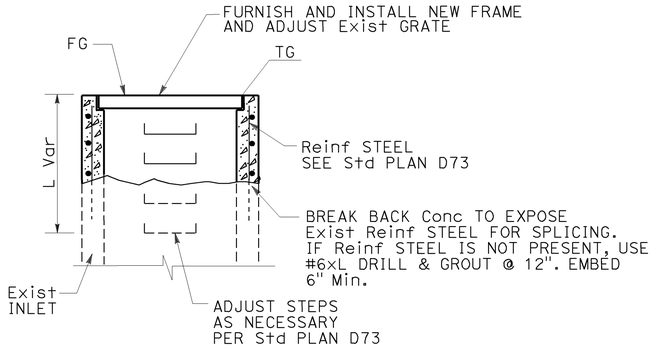

ADJUST INLET DETAIL

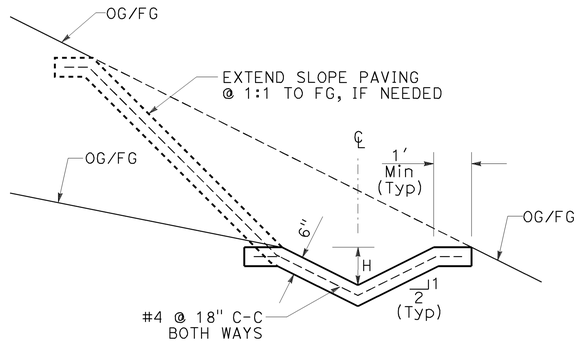

CONCRETE CHANNEL

DRAINAGE SYSTEM No. 12 e / 6 b

CORNER CONNECTION NOTES:

1. ROUND EDGE OF OUTLET TO 75 RADIUS.
2. REINFORCEMENT SHALL BE 40 CLEAR FROM THE FACE OF CONCRETE.
3. IN CONNECTING TO AN EXISTING STRUCTURE, BREAK OUT PORTIONS OF THE EXISTING STRUCTURE 300 OUTSIDE ITS INTERSECTION WITH THE NEW CONNECTION. BEND ENDS OF #13 BARS OVER CONNECTION OPENING AS REQUIRED.

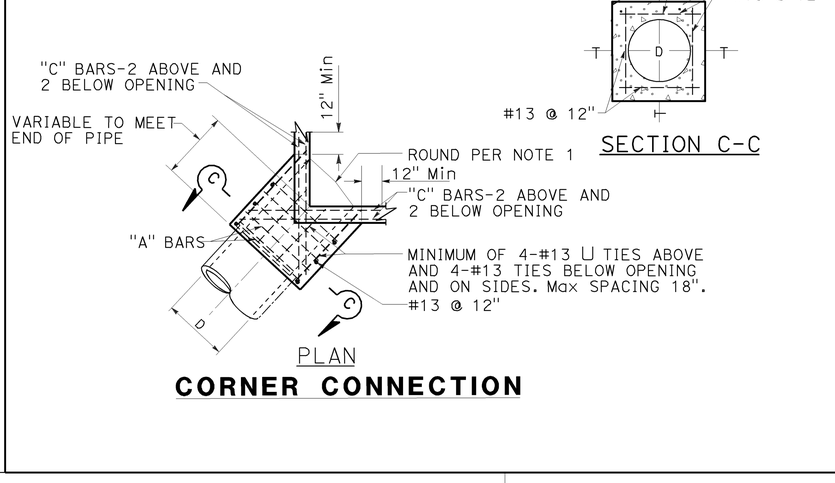

PLAN

SECTION C-C

CORNER CONNECTION

D (in)	T (in)	"A"	"B"-"C"
12	4.5	#13 @ 6"	#16
15	4.5		
18	5.0		
20	5.5		
24	6.0		
27	6.5		
30	7.0		
33	7.0		
36	7.5		
40	8.0		
42	8.0		
45	8.0	#16 @ 6"	#19
48	8.0		
50	8.0		
54	8.0		
56	10.0		
60	10.0		
64	10.0		
66	11.0		
70	11.0		
72	11.0		

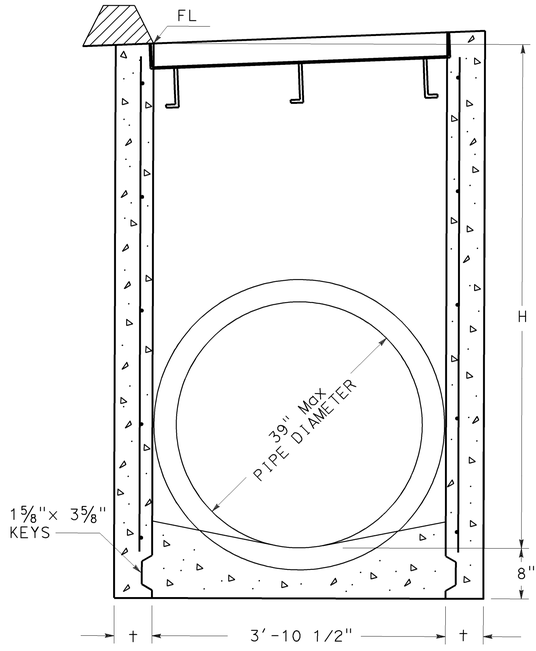

SECTION A-A

(FOR PIPE DIAMETERS 39" OR LESS)

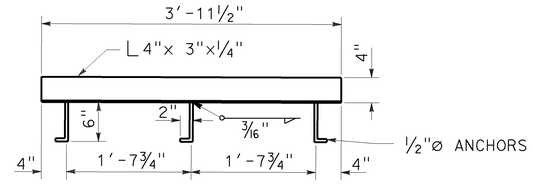

ANCHOR PLACEMENT DETAIL

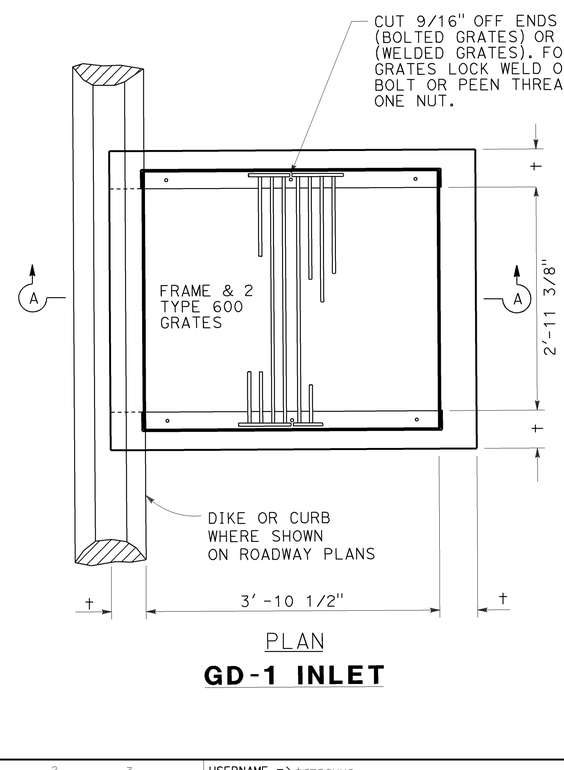

H	†
8' OR LESS	6"
8.01' TO 20'	8"

PLAN

GD-1 INLET

GD-1 INLET NOTES:

1. SEE STANDARD PLAN D77-A AND D77-B FOR FRAME AND GRATE DETAILS.
2. WHEN TYPE 24-10S, 24-12X, OR 24-13 GRATES ARE USED WITH GD1 INLETS, A 1/2" x 3-1/2" x 41" STEEL BAR SHALL BE WELDED ACROSS THE CENTER OF THE INLET FRAME TO SEPARATE THE INDIVIDUAL GRATES.

DRAINAGE DETAILS

NOT TO SCALE

DD-1

REVISED BY | DATE REVISED
EDELYNE MIGUEL | ROBERT HENDERSON
CALCULATED-DESIGNED BY | CHECKED BY
THOMAS IONTA
CONSULTANT FUNCTIONAL SUPERVISOR
STATE OF CALIFORNIA - DEPARTMENT OF TRANSPORTATION
Caltrans

LAST REVISION | DATE PLOTTED => 25-JAN-2010
00-00-00 | TIME PLOTTED => 08:25

D	L	T
12"	1.0'	4"
18"	1.0'	5"
24"	1.0'	6"
36"	1.5'	8"
48"	1.5'	10"
54"	1.5'	10"
60"	1.75'	11"
66"	1.75'	11"
72"	2.0'	12"
78"	2.0'	14"
84"	2.0'	14"
90"	2.0'	14"
108"	2.9'	18"

USE TABLE UNLESS OTHERWISE NOTED ON PLANS

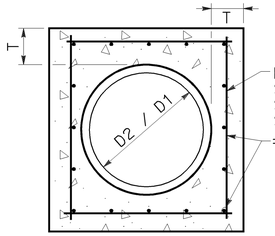

SECTION C-C

Conc COLLAR NOTES:

1. WHERE PIPES OF DIFFERENT DIAMETERS ARE JOINED WITH A CONCRETE COLLAR, 'L' AND 'T' SHALL BE THOSE OF THE LARGER PIPE. D=D1 OR D2, WHICHEVER IS GREATER.
2. FOR PIPE SIZE NOT LISTED USE NEXT SIZE LARGER.
3. OMIT REINFORCING ON PIPES 24" AND LESS IN DIAMETER AND ON ALL PIPES UP TO 72" DIAMETER WHERE ANGLE A IS LESS THAN 10°.
4. JOIN PIPES AT INVERTS WHERE THE SLOPE OF UPSTREAM PIPE IS LESS THAN THE SLOPE OF THE DOWNSTREAM PIPE, AND JOIN PIPES AT SOFFIT WITH A MITER JOINT WHERE THE SLOPE OF THE UPSTREAM PIPE IS GREATER THAN THE SLOPE OF THE DOWNSTREAM PIPE.
5. REINFORCEMENT SHALL BE PLACED 1 1/2 " CLEAR FROM OUTSIDE DIAMETER OF PIPE.
6. 10' Max COVER FOR 108" Dia PIPE COLLAR.

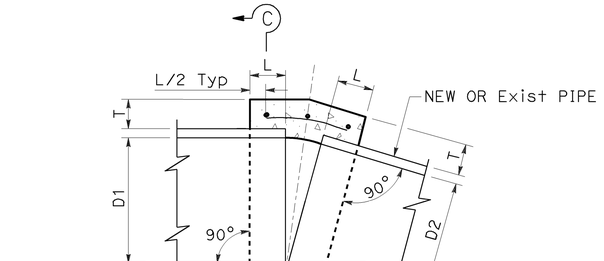

IDENTICAL PIPE DIAMETER

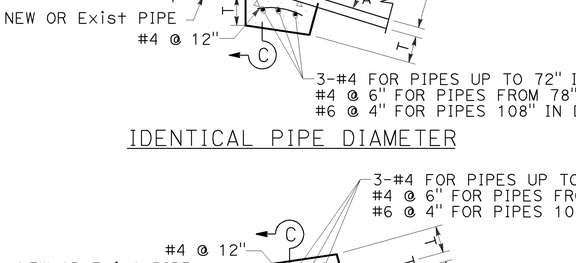

DIFFERENT PIPE DIAMETER

CONCRETE COLLAR DETAIL

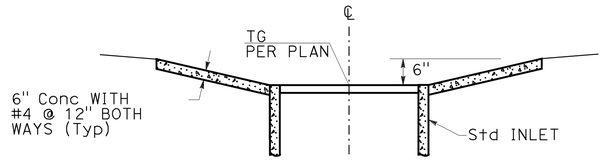

SECTION B-B

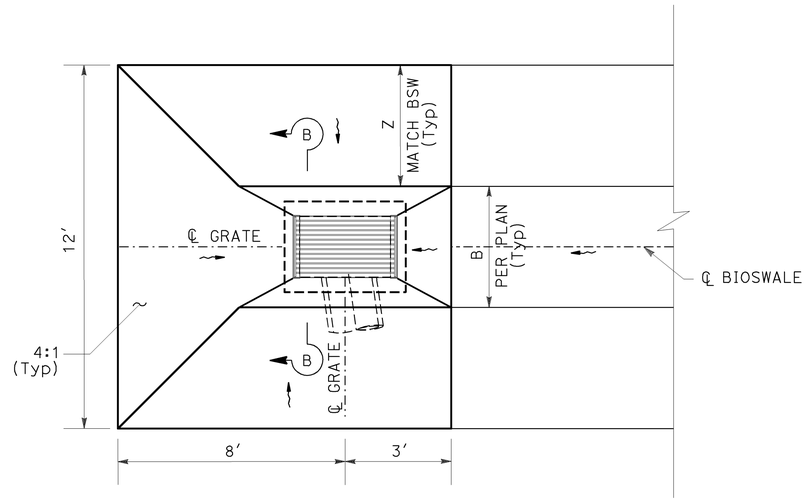

PLAN
PLACEMENT AT END OF BIOSWALE

DRAINAGE SYSTEM No. 21 (c)

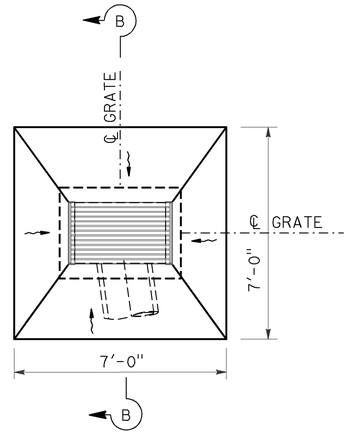

PLAN
TYPICAL PLACEMENT

DRAINAGE SYSTEM No. 11 (d) (f), 13 (b), 15 (j)

CONCRETE APRON

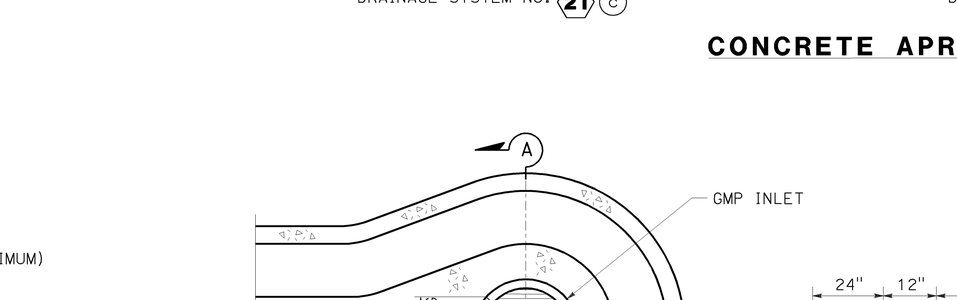

PLAN

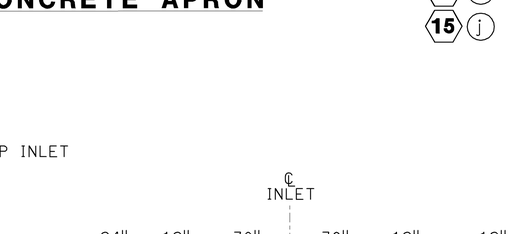

SECTION A-A

CONSTRUCTION NOTES:

1. SLOPE FLOOR OF DITCH TOWARDS INLET AT 1.0% (Min).

INLET AT CHANNEL END

DRAINAGE SYSTEM No. 12 (d)

DRAINAGE DETAILS

NOT TO SCALE

DD-2

Dist	COUNTY	ROUTE	POST MILES TOTAL PROJECT	SHEET No.	TOTAL SHEETS
12	Ora	57	18.4/20.9	133	856

REGISTERED CIVIL ENGINEER — 06-15-09 DATE

ROBERT M. HENDERSON No. C66736 Exp. 09/30/10 CIVIL — REGISTERED PROFESSIONAL ENGINEER — STATE OF CALIFORNIA

1-25-10
PLANS APPROVAL DATE

THE STATE OF CALIFORNIA OR ITS OFFICERS OR AGENTS SHALL NOT BE RESPONSIBLE FOR THE ACCURACY OR COMPLETENESS OF SCANNED COPIES OF THIS PLAN SHEET.

CH2M HILL
6 HUTTON CENTRE DRIVE, SUITE 700
SANTA ANA, CA 92707

OCTA
550 S. MAIN STREET
ORANGE, CA 92863

REVISED BY | DATE REVISED

EDELYNE MIGUEL | ROBERT HENDERSON

CALCULATED-DESIGNED BY | CHECKED BY

CONSULTANT FUNCTIONAL SUPERVISOR: THOMAS IONTA

STATE OF CALIFORNIA - DEPARTMENT OF TRANSPORTATION

Caltrans

LAST REVISION | DATE PLOTTED => 25-JAN-2010
00-00-00 | TIME PLOTTED => 08:25

BORDER LAST REVISED 4/11/2008

RELATIVE BORDER SCALE IS IN INCHES 0 1 2 3

USERNAME => trmnguye
DGN FILE => c0F032ic002.dgn

CU 12220

EA 0F0321

Dist	COUNTY	ROUTE	POST MILES TOTAL PROJECT	SHEET No.	TOTAL SHEETS
12	Ora	57	18.4/20.9	134	856

REGISTERED CIVIL ENGINEER — 06-15-09 DATE

ROBERT M. HENDERSON No. C66736 Exp. 09/30/10 CIVIL — REGISTERED PROFESSIONAL ENGINEER — STATE OF CALIFORNIA

1-25-10
PLANS APPROVAL DATE

THE STATE OF CALIFORNIA OR ITS OFFICERS OR AGENTS SHALL NOT BE RESPONSIBLE FOR THE ACCURACY OR COMPLETENESS OF SCANNED COPIES OF THIS PLAN SHEET.

CH2M HILL
6 HUTTON CENTRE DRIVE,
SUITE 700
SANTA ANA, CA 92707

OCTA
550 S. MAIN STREET
ORANGE, CA 92863

BASIN	DRAINAGE SYSTEM	UNIT	PIPE RISER SIZE	PIPE MATERIAL	OPENING AT Elev A NUMBER x SIZE	Elev A	OVERFLOW Elev	CSP THICKNESS
650 R	10	e	48"	Bit Ctd CSP	4 x 1.5"	298.00	301.51	0.079"

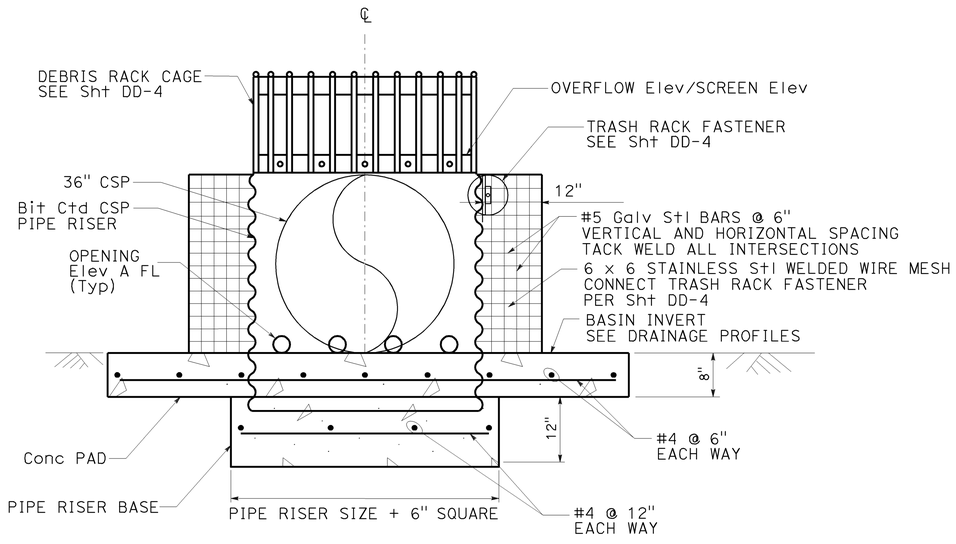

SECTION A-A

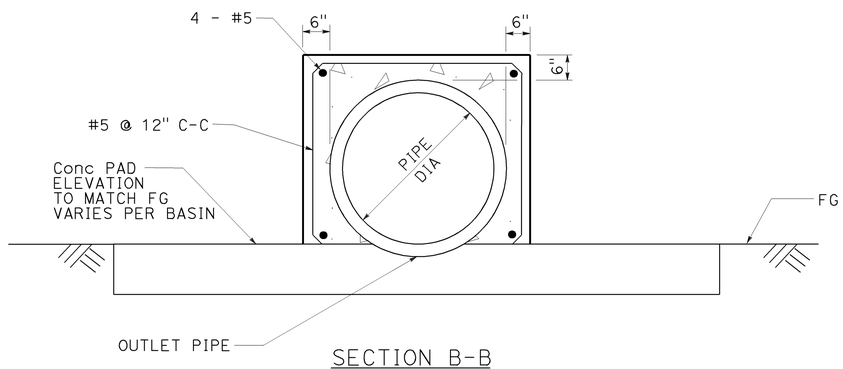

SECTION B-B
CONCRETE CAP

NOTES:

1. SLOPE APRON TO MATCH GRADE OF BERM WHEN APRON IS ON BERM
2. CORRUGATED STEEL PIPE RISER SHALL BE PROTECTED WITH BITUMINOUS COATING.
3. TRASH SCREEN SHALL BE COVERED WITH 6' x 3' STAINLESS STEEL WIRE MESH AT SCREEN ELEVATION.

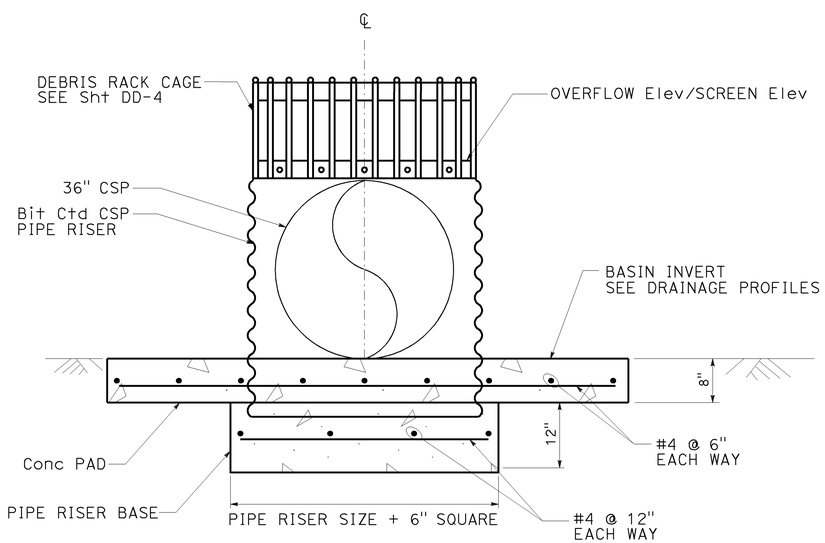

SECTION C-C
(No. 1.5" ø OPENINGS)

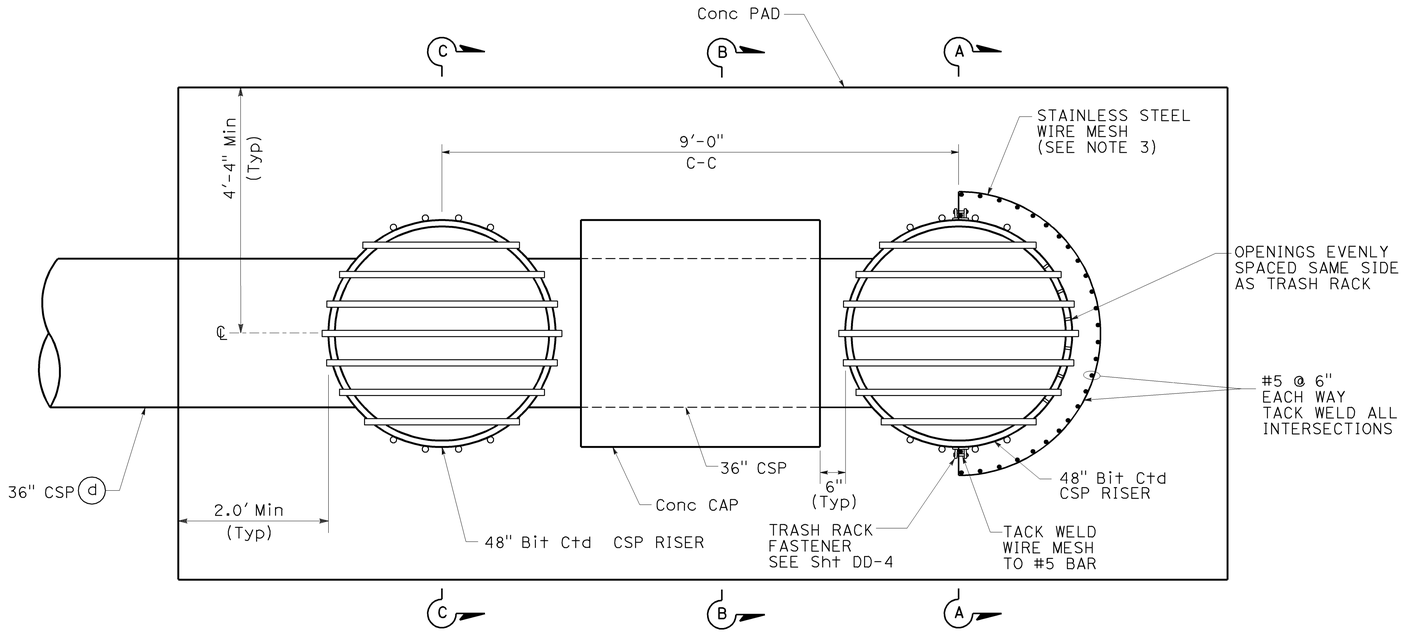

PLAN

DUAL WATER QUALITY RISER

DRAINAGE SYSTEM No. 10 (e)

DRAINAGE DETAILS

NOT TO SCALE

DD-3

LAST REVISION DATE PLOTTED => 25-JAN-2010
00-00-00 TIME PLOTTED => 08:26

REVISED BY | DATE REVISED
EDELYNE MIGUEL | ROBERT HENDERSON
CALCULATED-DESIGNED BY | CHECKED BY
CONSULTANT FUNCTIONAL SUPERVISOR: THOMAS IONTA
STATE OF CALIFORNIA - DEPARTMENT OF TRANSPORTATION
Caltrans

BORDER LAST REVISED 4/11/2008

RELATIVE BORDER SCALE IS IN INCHES 0 1 2 3

USERNAME => trmnguye
DGN FILE => c0F032ic003.dgn

CU 12220

EA 0F0321

Dist	COUNTY	ROUTE	POST MILES TOTAL PROJECT	SHEET No.	TOTAL SHEETS
12	Ora	57	18.4/20.9	135	856

REGISTERED CIVIL ENGINEER — 06-15-09 DATE

ROBERT M. HENDERSON No. C66736 Exp. 09/30/10 CIVIL — REGISTERED PROFESSIONAL ENGINEER — STATE OF CALIFORNIA

1-25-10
PLANS APPROVAL DATE

THE STATE OF CALIFORNIA OR ITS OFFICERS OR AGENTS SHALL NOT BE RESPONSIBLE FOR THE ACCURACY OR COMPLETENESS OF SCANNED COPIES OF THIS PLAN SHEET.

CH2M HILL
6 HUTTON CENTRE DRIVE,
SUITE 700
SANTA ANA, CA 92707

OCTA
550 S. MAIN STREET
ORANGE, CA 92863

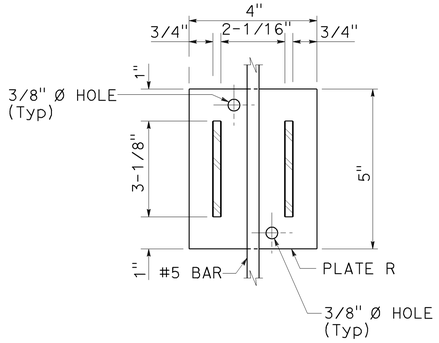

SECTION D-D

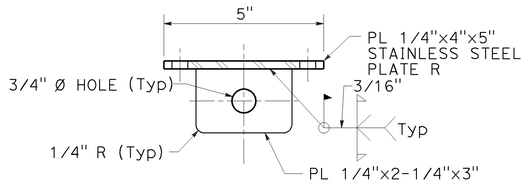

SECTION B-B

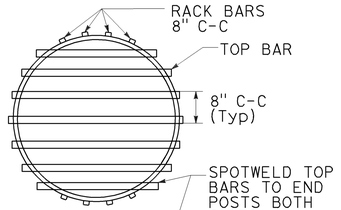

TOP VIEW

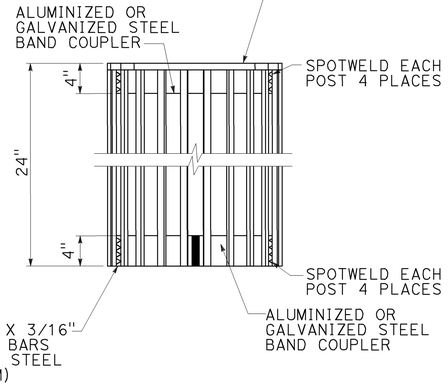

SIDE VIEW

DEBRIS RACK CAGE

DEBRIS RACK CAGE NOTES:

1. ALL REINFORCING STEEL SHALL BE #4 BARS.
2. TOP BARS: TYPE SAME AS RACK EXCEPT USE 1" Dia BARS WHEN RACK BARS ARE 1/2" Dia.
3. RACK: USE 2" GALVANIZED STEEL OR ALUMINUM PIPE L2" X 2" X 3/16" OR 1/2" Dia BARS, 1" Dia BARS ON TOP (GALVANIZED STEEL OR ALUMINUM).
4. WHEN USED WITH MODIFIED GCP INLET GALVANIZED STEEL L2" x 2" x 3/16" RACK BARS SHALL BE USED.
5. FOR MODIFIED GCP INLET BAND COUPLER SHALL BE GALVANIZED STEEL WITH OUTSIDE DIAMETER OF 3'-0".

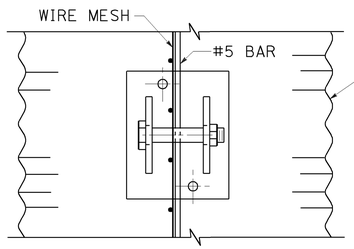

ELEVATION

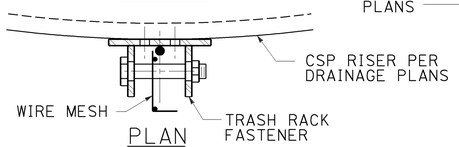

PLAN

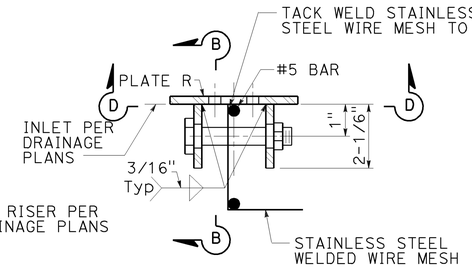

TRASH RACK FASTENER

EARTHEN DITCH NOTES:

1. TRASH RACK FASTENERS SHALL BE BOLTED TO CSP RISER AT LOCATIONS SHOWN.
2. ALL HARDWARE AND FABRICATION MATERIALS SHALL BE STAINLESS STEEL.
3. ALL BARS SHALL BE STAINLESS STEEL.

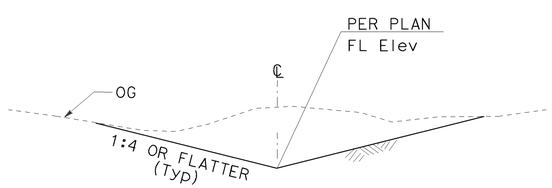

EARTHEN DITCH

"B" LINE Sta 611+45.00 TO Sta 613+00.00
"J-4" LINE Sta 51+80.09 TO Sta 52+28.00

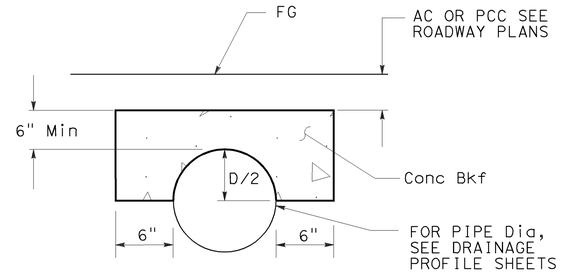

PIPE ENCASEMENT

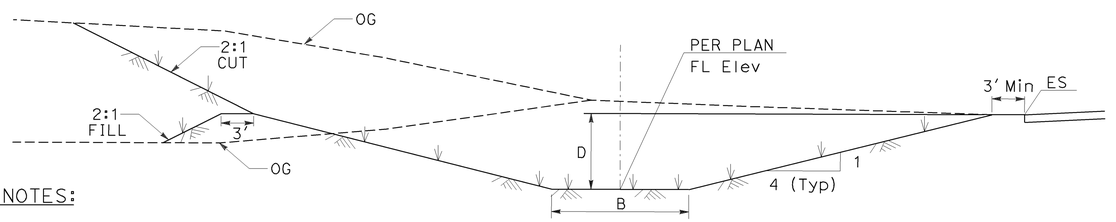

SWALE NOTES:

1. "B", "Z", AND "FL" PER PLANS. D=1.0' Min.
2. BIO-SWALE SEED MIX PER LANSDCAPE PLANS.

BIO-SWALE TYPICAL SECTION

BSW 646R "B" LINE Sta 645+85.30 TO Sta 648+31.20
BSW 47R "J-4" LINE Sta 46+34.00 TO Sta 51+71.11
BSW 707R "B" LINE Sta 702+95.00 TO Sta 708+15.00

DRAINAGE DETAILS

NOT TO SCALE

DD-4

EDELYNE MIGUEL — CALCULATED-DESIGNED BY
ROBERT HENDERSON — CHECKED BY
THOMAS IONTA — CONSULTANT FUNCTIONAL SUPERVISOR
STATE OF CALIFORNIA - DEPARTMENT OF TRANSPORTATION — Caltrans

REVISED BY | DATE REVISED

LAST REVISION 00-00-00 | DATE PLOTTED => 25-JAN-2010 | TIME PLOTTED => 08:26

BORDER LAST REVISED 4/11/2008 | RELATIVE BORDER SCALE IS IN INCHES 0 1 2 3 | USERNAME => trmnguye | DGN FILE => c0f032ic004.dgn | CU 12220 | EA 0F0321

Dist	COUNTY	ROUTE	POST MILES TOTAL PROJECT	SHEET No.	TOTAL SHEETS
12	Ora	57	18.4/20.9	136	856

REGISTERED CIVIL ENGINEER — 06-15-09 DATE

ROBERT M. HENDERSON No. C66736 Exp. 09/30/10 CIVIL — REGISTERED PROFESSIONAL ENGINEER — STATE OF CALIFORNIA

1-25-10
PLANS APPROVAL DATE

THE STATE OF CALIFORNIA OR ITS OFFICERS OR AGENTS SHALL NOT BE RESPONSIBLE FOR THE ACCURACY OR COMPLETENESS OF SCANNED COPIES OF THIS PLAN SHEET.

CH2M HILL
6 HUTTON CENTRE DRIVE,
SUITE 700
SANTA ANA, CA 92707

OCTA
550 S. MAIN STREET
ORANGE, CA 92863

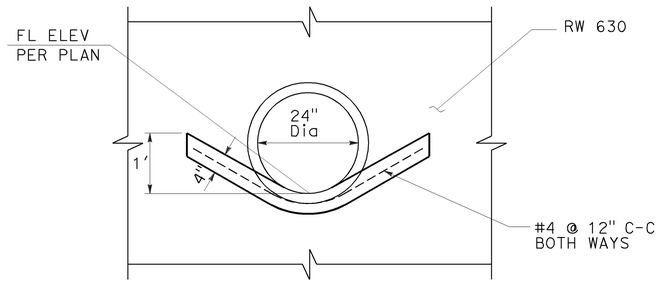

SECTION A-A

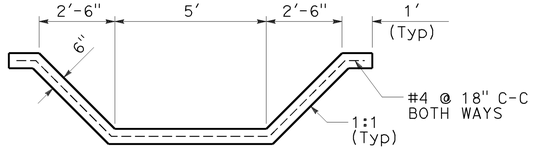

SECTION D-D

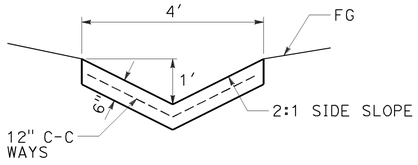

SECTION B-B

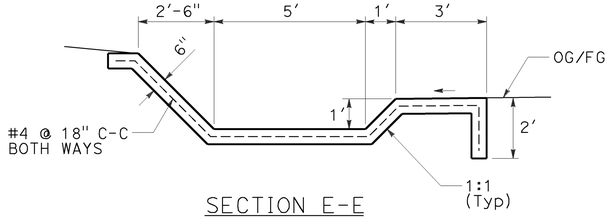

SECTION E-E

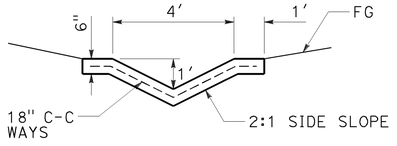

SECTION F-F

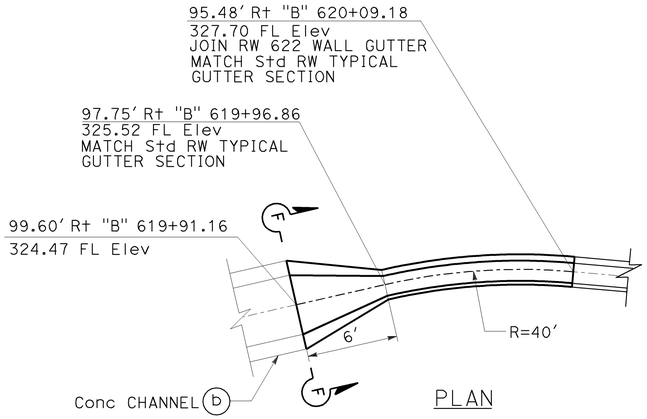

PLAN

TRANSITION STRUCTURE No. 2

DRAINAGE SYSTEM No. (6)(c)

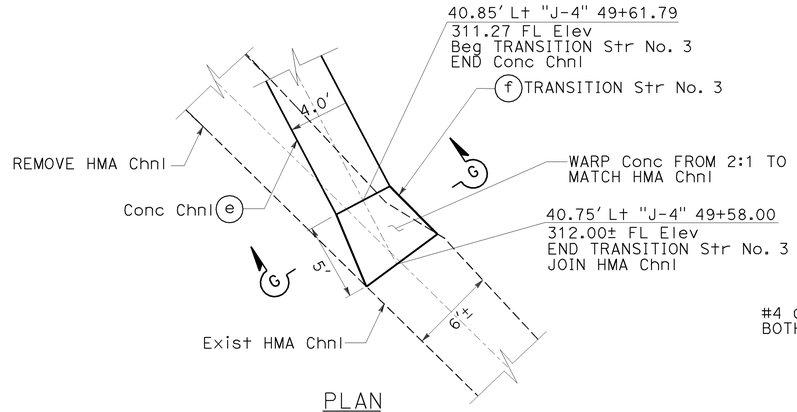

PLAN

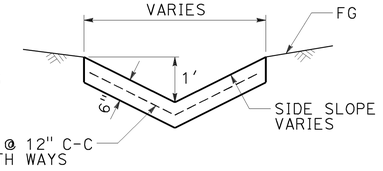

SECTION G-G

TRANSITION STRUCTURE No. 3

DRAINAGE SYSTEM No. (12)(f)

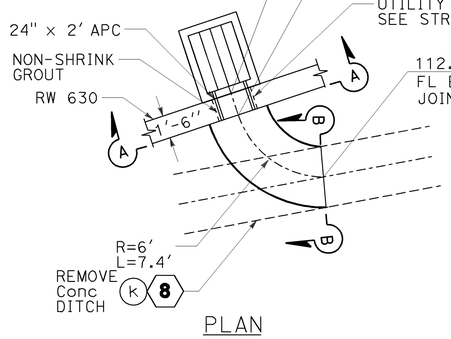

PLAN

JS No. 1

DRAINAGE SYSTEM No. (8)

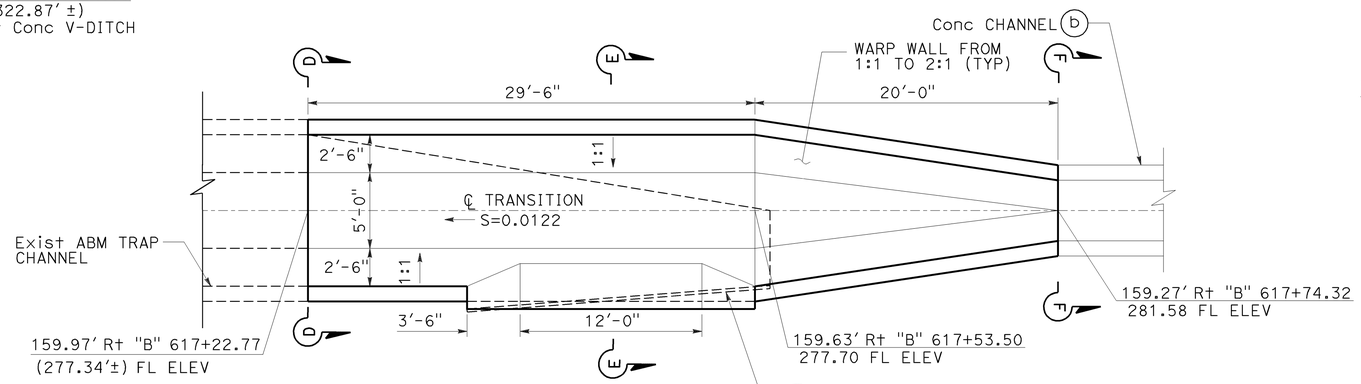

PLAN

TRANSITION STRUCTURE No. 1

DRAINAGE SYSTEM No. (6)(a)

TRANSITION Str NOTES:

1. Min Clr FOR REINFORCING STEEL SHALL BE 1-1/2".

DRAINAGE DETAILS

NOT TO SCALE

DD-5

STATE OF CALIFORNIA - DEPARTMENT OF TRANSPORTATION
CONSULTANT FUNCTIONAL SUPERVISOR: THOMAS IONTA
CALCULATED-DESIGNED BY: EDELYNE MIGUEL
CHECKED BY: ROBERT HENDERSON
REVISED BY | DATE REVISED

LAST REVISION | DATE PLOTTED => 25-JAN-2010
00-00-00 | TIME PLOTTED => 08:26

BORDER LAST REVISED 4/11/2008

RELATIVE BORDER SCALE IS IN INCHES 0 1 2 3

USERNAME => trmnguye
DGN FILE => c0F032ic005.dgn

CU 12220

EA 0F0321

Dist	COUNTY	ROUTE	POST MILES TOTAL PROJECT	SHEET No.	TOTAL SHEETS
12	Ora	57	18.4/20.9	137	856

Robert M. Henderson 06-15-09
REGISTERED CIVIL ENGINEER DATE

ROBERT M. HENDERSON No. C66736 Exp. 09/30/10 CIVIL — REGISTERED PROFESSIONAL ENGINEER — STATE OF CALIFORNIA

1-25-10
PLANS APPROVAL DATE

THE STATE OF CALIFORNIA OR ITS OFFICERS OR AGENTS SHALL NOT BE RESPONSIBLE FOR THE ACCURACY OR COMPLETENESS OF SCANNED COPIES OF THIS PLAN SHEET.

CH2M HILL
6 HUTTON CENTRE DRIVE,
SUITE 700
SANTA ANA, CA 92707

OCTA
550 S. MAIN STREET
ORANGE, CA 92863

RSP NOTES:

1. RSP SHALL BE CONSTRUCTED IN LAYERS AS SHOWN IN THE TYPICAL SECTION. PLACEMENT SHALL BE METHOD B. DEPTHS SHOWN ARE Min.
2. FG SHALL BE FLUSH WITH OG.
3. RSP FABRIC SHALL BE PROVIDED AT ALL SOIL INTERFACES.
4. FOR DRAINAGE SYSTEM DESIGN SEE DRAINAGE PLANS AND PROFILES.

DRAINAGE Sys No.	UNIT	TYPE OF RSP	W_{sp}	W_c	L_{sp}	Thk
9	a	FACING, METHOD B	10′	7′	14′	2.0′
9	r	FACING, METHOD B	10′	10′	10′	2.0′
11	a	FACING, METHOD B	20′	13′	20′	2.0′
12	a	FACING, METHOD B	10′	5′	16′	2.0′
15	a	FACING, METHOD B	10′	7′	16′	2.0′
21	j	FACING, METHOD B	10′	10′	10′	2.0′

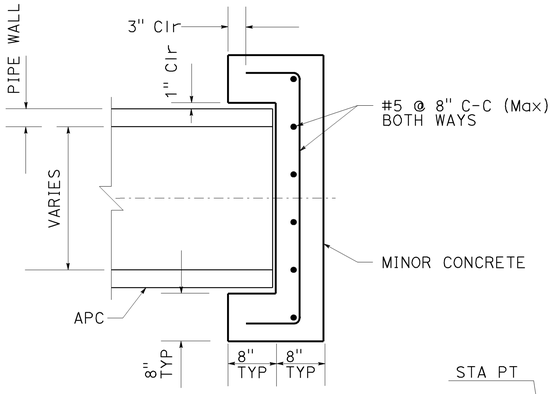

CONCRETE BULKHEAD

DRAINAGE SYSTEM No. 2 (f) 5 (i) 8 (q)

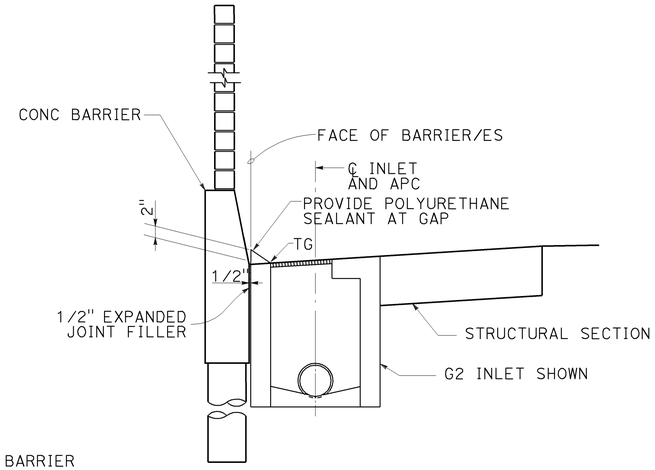

SOUNDWALL BARRIER ON PILES

DRAINAGE SYSTEM No. 16 (c) (e) (g)

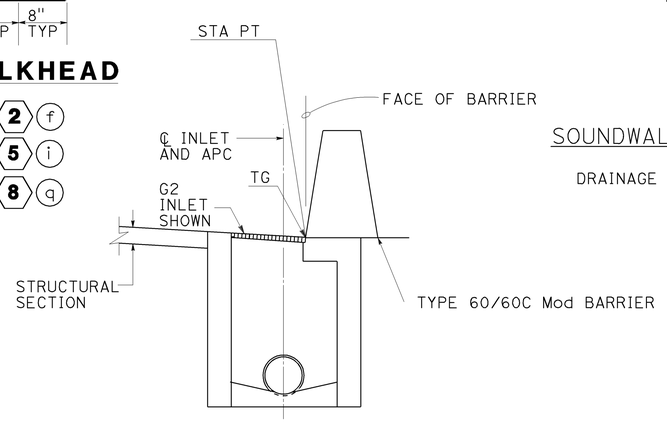

TYPE 60/60C BARRIER

DRAINAGE SYSTEM No. 1 (i)

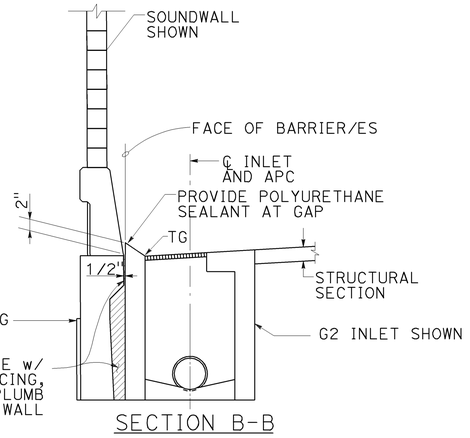

SECTION B-B

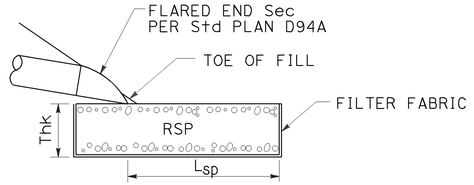

SECTION A-A

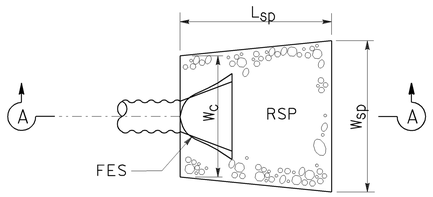

PLAN

ROCK SLOPE PROTECTION AT PIPE OUTLET

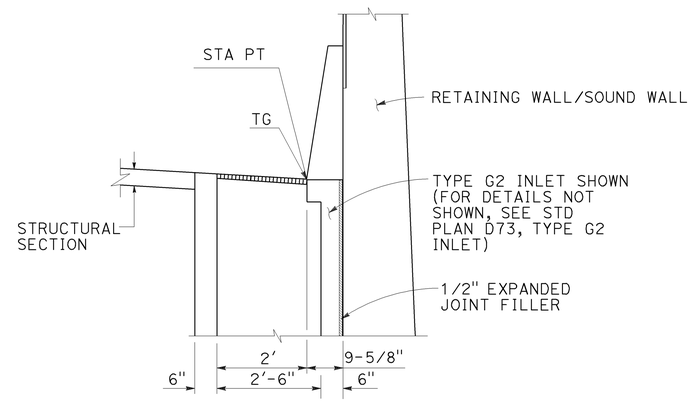

RETAINING WALL/SOUND WALL WITH BARRIER

DRAINAGE SYSTEM No. 1 (m) (o) 4 (c) (e) (g) (i) (k) (m) 14 (e) (g) (i) (k) (m) 8 (i) (k)

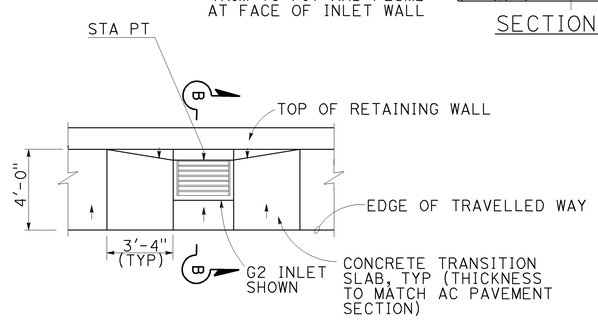

RETAINING WALL WITH BARRIER

DRAINAGE SYSTEM No. 8 (e) (g) 3 (c) (d) 9 (d) (f) (h) 16 (c) (e) (g) 20 (a) (c) (e) (g) 22 (a)

INLET TYPICAL PLACEMENT

DRAINAGE DETAILS

NOT TO SCALE

DD-6

STATE OF CALIFORNIA - DEPARTMENT OF TRANSPORTATION
Caltrans
CONSULTANT FUNCTIONAL SUPERVISOR: THOMAS IONTA
CALCULATED-DESIGNED BY: EDELYNE MIGUEL
CHECKED BY: ROBERT HENDERSON
REVISED BY
DATE REVISED

LAST REVISION DATE PLOTTED => 25-JAN-2010
00-00-00 TIME PLOTTED => 08:27

BORDER LAST REVISED 4/11/2008
RELATIVE BORDER SCALE IS IN INCHES 0 1 2 3
USERNAME => trmnguye
DGN FILE => c0F032ic006.dgn
CU 12220
EA 0F0321

NOTES:
1. HDPE GEOMEMBRANE SHALL BE PLACED PER Sht C-38.
2. WELD BOOT TO LINER TO PROVIDE WATERTIGHT BARRIER.
3. RSP AND RSP FABRIC SHALL BE PER DRAINAGE PLANS AND PROFILES.

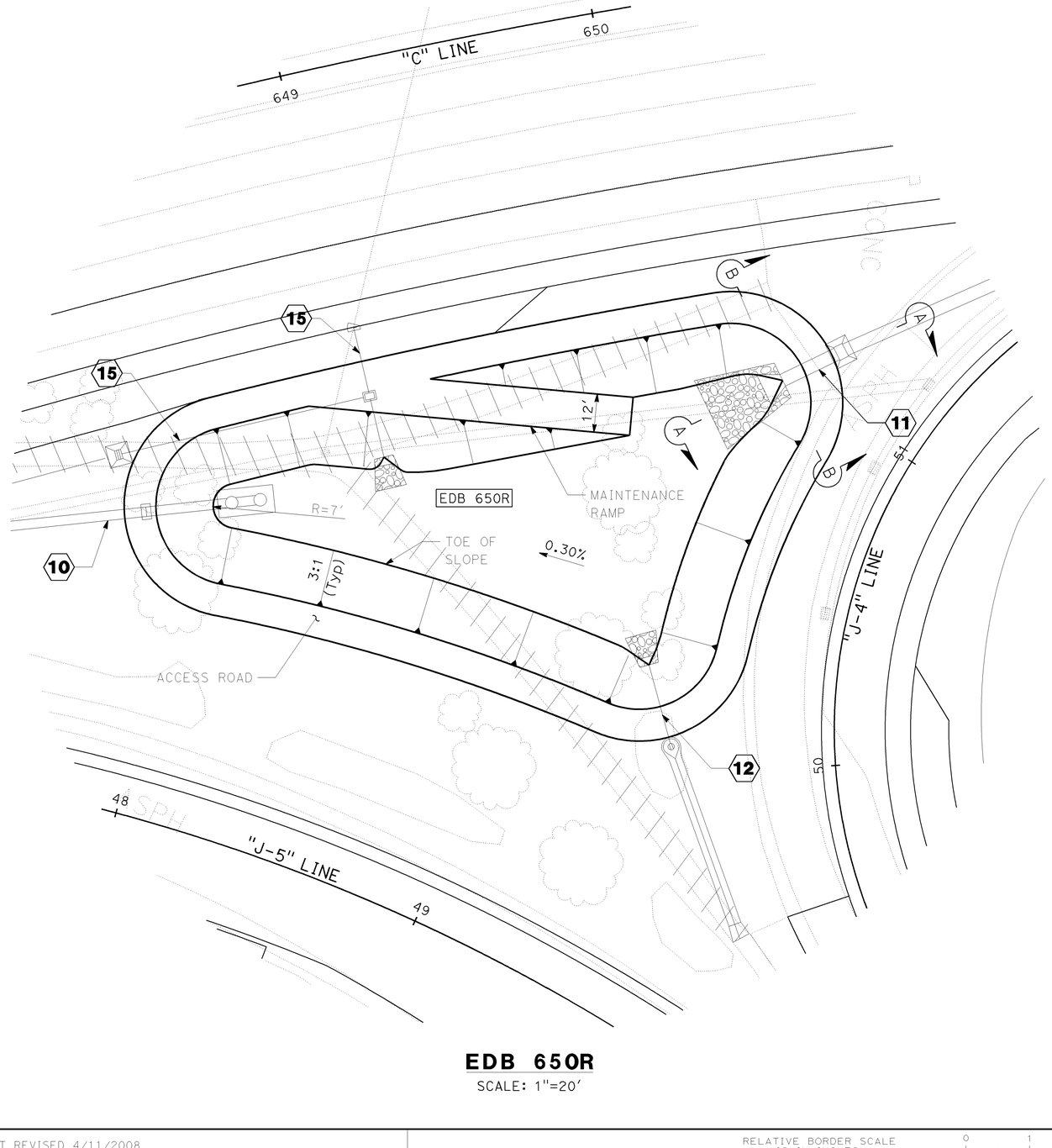

EDB 650R
SCALE: 1"=20'

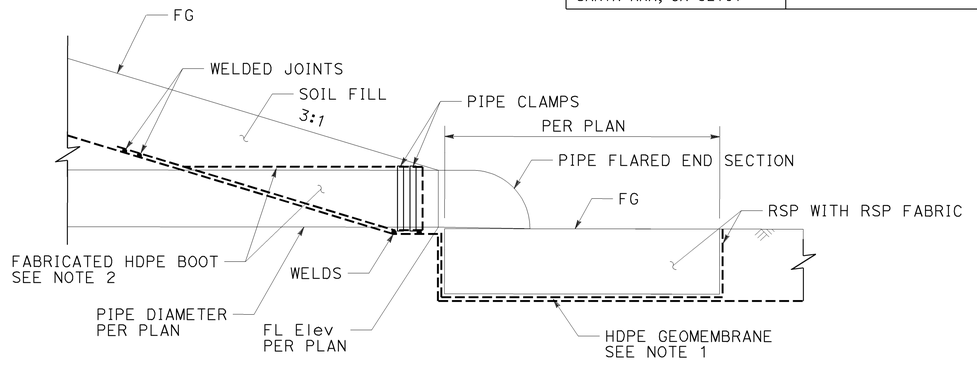

SECTION A-A
LINEAR PENETRATION TYPICAL SECTION

NO SCALE

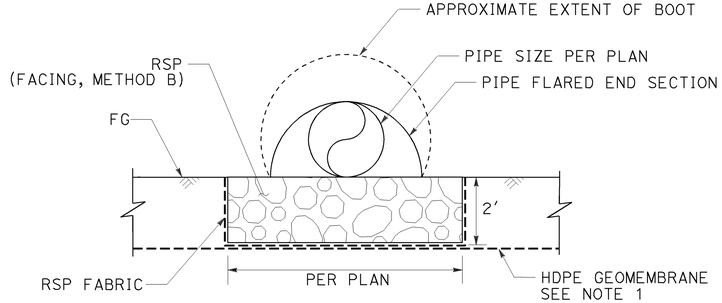

SECTION B-B
LINEAR PENETRATION TYPICAL SECTION

NO SCALE

DRAINAGE DETAILS

DD-7

Dist	COUNTY	ROUTE	POST MILES TOTAL PROJECT	SHEET No.	TOTAL SHEETS
12	Ora	57	18.4/20.9	138	856

REGISTERED CIVIL ENGINEER — DATE: 06-15-09

ROBERT M. HENDERSON
No. C66736
Exp. 09/30/10
CIVIL
REGISTERED PROFESSIONAL ENGINEER
STATE OF CALIFORNIA

1-25-10
PLANS APPROVAL DATE

THE STATE OF CALIFORNIA OR ITS OFFICERS OR AGENTS SHALL NOT BE RESPONSIBLE FOR THE ACCURACY OR COMPLETENESS OF SCANNED COPIES OF THIS PLAN SHEET.

CH2M HILL
6 HUTTON CENTRE DRIVE,
SUITE 700
SANTA ANA, CA 92707

OCTA
550 S. MAIN STREET
ORANGE, CA 92863

REVISED BY | DATE REVISED
EDELYNE MIGUEL | ROBERT HENDERSON
CALCULATED-DESIGNED BY | CHECKED BY
CONSULTANT FUNCTIONAL SUPERVISOR
THOMAS IONTA
STATE OF CALIFORNIA - DEPARTMENT OF TRANSPORTATION
Caltrans

LAST REVISION | DATE PLOTTED => 25-JAN-2010
00-00-00 | TIME PLOTTED => 08:27

ALTERNATIVE PIPE CULVERT AND ALTERNATIVE FLARED END SECTION

RCP	SSRP			HDPEP
SIZE (in)	SIZE (in)	THICKNESS (in)	BITUMINOUS COATING	SIZE (in)
18	18	.079	YES	18
24	24	.079	YES	24
36	36	.079	YES	36
48	48	.079	YES	48

ABBREVIATIONS:

HDPEP RIBBED PROFILE WALL POLYETHYLENE PIPE, TYPE S
S STANDARD JOINT TYPE
D DOWNDRAIN JOINT TYPE
(N) NOT A SEPARATE PAY ITEM, FOR INFORMATION ONLY

Dist	COUNTY	ROUTE	POST MILES TOTAL PROJECT	SHEET No.	TOTAL SHEETS
12	Ora	57	18.4/20.9	139	856

REGISTERED CIVIL ENGINEER — 06/15/09 DATE

ROBERT M. HENDERSON No. C66736 Exp. 09/30/10 CIVIL — REGISTERED PROFESSIONAL ENGINEER — STATE OF CALIFORNIA

1-25-10
PLANS APPROVAL DATE

THE STATE OF CALIFORNIA OR ITS OFFICERS OR AGENTS SHALL NOT BE RESPONSIBLE FOR THE ACCURACY OR COMPLETENESS OF SCANNED COPIES OF THIS PLAN SHEET.

CH2M HILL
6 HUTTON CENTRE DRIVE,
SUITE 700
SANTA ANA, CA 92707

OCTA
550 S. MAIN STREET
ORANGE, CA 92863

DRAINAGE SYSTEM No. ⬡	DRAINAGE UNIT ◯	ABANDON CULVERT	ABANDON INLET	REMOVE PIPE	REMOVE INLET	REMOVE HEADWALL	ADJUST INLET	REMOVE CONCRETE	CAP INLET	SAND BACKFILL	HOT MIX ASPHALT (TYPE A)	PLACE HOT MIX ASPHALT (MISCELLANEOUS AREA)	MINOR CONCRETE (MINOR STRUCTURE)	MINOR CONCRETE (BACKFILL)	APC 18"	APC 24"	APC 36"	APC 48"	18" BITUMINOUS COATED CSP (0.079" THICK)	36" BITUMINOUS COATED CSP (0.079" THICK)	GRATED LINE DRAIN	18" BITUMINOUS COATED CSP RISER (0.079" THICK)	48" BITUMINOUS COATED CSP RISER (0.079" THICK)	18" ALTERNATIVE FLARED END SECTION	24" ALTERNATIVE FLARED END SECTION	48" ALTERNATIVE FLARED END SECTION	ROCK SLOPE PROTECTION (FACING, METHOD B)	ROCK SLOPE PROTECTION FABRIC	MISCELLANEOUS IRON AND STEEL	FRAME & GRATE (24-12) (N)	ELBOW (N)	CONCRETE COLLAR (N)	"H" OR "V"	MAXIMUM COVER	PIPE JOINT CLASSIFICATION	DESCRIPTION	STATION	DRAINAGE PLAN SHEET No.	DRAINAGE SYSTEM No. ⬡	DRAINAGE UNIT ◯
		LF	EA	LF	EA	EA	EA	CY	EA	CY	TON	SQYD	CY	CY	LF	LF	LF	LF	LF	LF	LF	LF	LF	LF	LF	LF	CY	SQYD	LB	EA	EA	EA	FT	FT					
1	a												3.96																652	2			8.38			GD-1 INLET	103.02′ Rt "B" 588+14	D-1	1	a
	b															33.0																		6.2	S	24" APC				b
	c												3.84																652	2			8.10			GD-1 INLET	102.30′ Rt "B" 588+50	D-2		c
	d															107.0																		5.4	S	24" APC				d
	e												2.79																652	2			7.90			GD-1 INLET	100.10′ Rt "B" 589+60			e
	f															107.0																		5.6	S	24" APC				f
	g												2.75																652	2			7.77			GD-1 INLET	97.90′ Rt "B" 590+70			g
	h															127.0																		5.5	S	24" APC				h
	i												2.70																652	2			7.61			GD-1 INLET	95.30′ Rt "B" 592+00			i
	j															107.0																		5.3	S	24" APC				j
	k												1.78																652	2			4.45			GD-1 INLET	93.10′ Rt "B" 593+10			k
	l															187.0																		2.4	S	24" APC				l
	m												1.78																652	2			4.43			GD-1 INLET	93′ Rt "B" 595+00			m
	n															162.0																		2.3	S	24" APC				n
	o												1.80																652	2			4.52			GD-1 INLET	93′ Rt "B" 596+65			o
	p															332.0																		2.2	S	24" APC				p
	q												1.73																652	2			4.26			GD-1 INLET	93′ Rt "B" 600+00			q
	r																				72.0														GLD	"B" 588+50 TO 589+22 Rt	D-1		r
	s																				75.0														GLD	"B" 589+62 TO 590+37 Rt	D-2		s
	t																				100.0														GLD	"B" 590+72 TO 591+72 Rt			t
	u																				6.0														GLD	"B" 593+12 TO 593+18 Rt			u
	v															24.3																		5.2	S	24" APC				v
	w																															1			Conc COLLAR	70.6′ Rt "B" 592+00			w
	x	408.0								26.70																										Abn 18" RCP		D-1		x
	y				1																															REMOVE INLET	70.60′ Rt "B" 592+00	D-2		y
	z	48.0								3.14																										Abn 18" RCP				z
	aa		1							1.87																										Abn INLET	70.70′ Rt "B" 592+50.38			aa
	bb	48.0								3.14																										Abn 18" RCP				bb
SHEET TOTAL		504.0	1		1					34.9			23.1			1186.3					253.0								5868	18		1				SHEET TOTALS				

DRAINAGE QUANTITIES

DQ-1

STATE OF CALIFORNIA - DEPARTMENT OF TRANSPORTATION
CONSULTANT FUNCTIONAL SUPERVISOR: THOMAS IONTA
CALCULATED-DESIGNED BY: EDELYNE MIGUEL
CHECKED BY: ROBERT HENDERSON
REVISED BY
DATE REVISED

LAST REVISION: DATE PLOTTED => 25-JAN-2010 TIME PLOTTED => 08:29
00-00-00

BORDER LAST REVISED 4/11/2008
RELATIVE BORDER SCALE IS IN INCHES 0 1 2 3
USERNAME => trmnguye
DGN FILE => c0F032id001.dgn
CU 12220
EA 0F0321

Dist	COUNTY	ROUTE	POST MILES TOTAL PROJECT	SHEET No.	TOTAL SHEETS
12	Ora	57	18.4/20.9	140	856

REGISTERED CIVIL ENGINEER — 06/15/09 DATE

1-25-10
PLANS APPROVAL DATE

REGISTERED PROFESSIONAL ENGINEER — ROBERT M. HENDERSON — No. C66736 — Exp. 09/30/10 — CIVIL — STATE OF CALIFORNIA

THE STATE OF CALIFORNIA OR ITS OFFICERS OR AGENTS SHALL NOT BE RESPONSIBLE FOR THE ACCURACY OR COMPLETENESS OF SCANNED COPIES OF THIS PLAN SHEET.

CH2M HILL
6 HUTTON CENTRE DRIVE,
SUITE 700
SANTA ANA, CA 92707

OCTA
550 S. MAIN STREET
ORANGE, CA 92863

DRAINAGE SYSTEM No. ⬡	DRAINAGE UNIT ○	ABANDON CULVERT	ABANDON INLET	REMOVE PIPE	REMOVE INLET	REMOVE HEADWALL	ADJUST INLET	REMOVE CONCRETE	CAP INLET	SAND BACKFILL	HOT MIX ASPHALT (TYPE A)	PLACE HOT MIX ASPHALT (MISCELLANEOUS AREA)	MINOR CONCRETE (MINOR STRUCTURE)	MINOR CONCRETE (BACKFILL)	APC 18"	APC 24"	APC 36"	APC 48"	18" BITUMINOUS COATED CSP (0.079" THICK)	36" BITUMINOUS COATED CSP (0.079" THICK)	GRATED LINE DRAIN	18" BITUMINOUS COATED CSP RISER (0.079" THICK)	48" BITUMINOUS COATED CSP RISER (0.079" THICK)	18" ALTERNATIVE FLARED END SECTION	24" ALTERNATIVE FLARED END SECTION	48" ALTERNATIVE FLARED END SECTION	ROCK SLOPE PROTECTION (FACING, METHOD B)	ROCK SLOPE PROTECTION FABRIC	MISCELLANEOUS IRON AND STEEL	FRAME & GRATE (24-12) (N)	ELBOW (N)	CONCRETE COLLAR (N)	"H" OR "V"	MAXIMUM COVER	PIPE JOINT CLASSIFICATION	DESCRIPTION	STATION	DRAINAGE PLAN SHEET No.	DRAINAGE SYSTEM No. ⬡	DRAINAGE UNIT ○
		LF	EA	LF	EA	EA	EA	CY	EA	CY	TON	SQYD	CY	CY	LF	LF	LF	LF	LF	LF	LF	LF	LF	EA	EA	EA	CY	SQYD	LB	EA	EA	EA	FT	FT						
1	cc		1							1.44																										Abn INLET	70.97′ Rt "B" 593+01.91	D-2	1	cc
2	a												1.66																326	1			4.03			G1 INLET	22′ Lt "I-7" 84+84	D-1	2	a
	b														48.1																			3.0	S	18" APC				b
	c												1.82																326	1			4.57			G2 INLET	22′ Lt "I-7" 85+35			c
	d														48.2																			3.0	S	18" APC				d
	e												1.50																326	1			3.81			G1 INLET	83.48′ Lt "B" 585+88			e
	f																				3.1									2					18" Bit Ctd CSP RISER w/ CONNECTIONS				f
	g				1																															REMOVE INLET	20.4′ Lt "I-7" 84+83.9			g
	h	48.0								3.14																										Abn 18" RCP				h
	i			3.5																																REMOVE 18" CMP RISER				i
	j				1																															REMOVE INLET	20.2′ Lt "I-7" 85+35.5			j
	k	48.0								3.14																										Abn 18" RCP				k
	l				1																															REMOVE INLET	81.8′ Lt "B" 585+88.5			l
3	a												2.27																652	2			6.14			GD-1 INLET	93′ Rt "B" 612+49.29	D-3	3	a
	b																47.8																	4.0	S	24" APC		D-4		b
	c												1.78																652	2			4.46			GD-1 INLET	93′ Rt "B" 613+00			c
	d																					6.0														GLD	"B" 612+51 TO 612+57			d
	e										1																										CAP INLET	71.7′ Rt "B" 611+74.6	D-3		e
	f										1																										CAP INLET	71.7′ Rt "B" 612+25.9			f
3A	a																															1				Conc COLLAR	71.88′ Lt "B" 603+70	D-3	3A	a
	b														18.6																			1.6	S	18" APC				b
	c												1.59																652	2			3.79			GD-1 INLET	73.95′ Lt "B" 603+50			c
	d														47.0																			1.6	S	18" APC				d
	e												1.44																652	2			3.29			GD-1 INLET	76.32′ Lt "B" 603+00			e
	f	18.7								1.22																										Abn 18" RCP				f
SHEET TOTAL		114.7	1	3.5	3				2	8.9			12.1		161.9	47.8					6.0	3.1							3586	11	2	1				SHEET TOTALS				

DRAINAGE QUANTITIES

DQ-2

CALCULATED-DESIGNED BY: EDELYNE MIGUEL
CHECKED BY: ROBERT HENDERSON
REVISED BY
DATE REVISED
CONSULTANT FUNCTIONAL SUPERVISOR: THOMAS IONTA
STATE OF CALIFORNIA - DEPARTMENT OF TRANSPORTATION
Caltrans

LAST REVISION 00-00-00
DATE PLOTTED => 25-JAN-2010
TIME PLOTTED => 08:29

BORDER LAST REVISED 4/11/2008
RELATIVE BORDER SCALE IS IN INCHES 0 1 2 3
USERNAME => trmnguye
DGN FILE => c0F032id002.dgn
CU 12220
EA 0F0321

Dist	COUNTY	ROUTE	POST MILES TOTAL PROJECT	SHEET No.	TOTAL SHEETS
12	Ora	57	18.4/20.9	141	856

REGISTERED CIVIL ENGINEER — 06/15/09 DATE

1-25-10
PLANS APPROVAL DATE

ROBERT M. HENDERSON
No. C66736
Exp. 09/30/10
CIVIL
REGISTERED PROFESSIONAL ENGINEER
STATE OF CALIFORNIA

THE STATE OF CALIFORNIA OR ITS OFFICERS OR AGENTS SHALL NOT BE RESPONSIBLE FOR THE ACCURACY OR COMPLETENESS OF SCANNED COPIES OF THIS PLAN SHEET.

CH2M HILL
6 HUTTON CENTRE DRIVE,
SUITE 700
SANTA ANA, CA 92707

OCTA
550 S. MAIN STREET
ORANGE, CA 92863

DRAINAGE SYSTEM No. ⬡	DRAINAGE UNIT ◯	ABANDON CULVERT	ABANDON INLET	REMOVE PIPE	REMOVE INLET	REMOVE HEADWALL	ADJUST INLET	REMOVE CONCRETE	CAP INLET	SAND BACKFILL	HOT MIX ASPHALT (TYPE A)	PLACE HOT MIX ASPHALT (MISCELLANEOUS AREA)	MINOR CONCRETE (MINOR STRUCTURE)	MINOR CONCRETE (BACKFILL)	APC 18"	APC 24"	APC 36"	APC 48"	18" BITUMINOUS COATED CSP (0.079" THICK)	36" BITUMINOUS COATED CSP (0.079" THICK)	GRATED LINE DRAIN	18" BITUMINOUS COATED CSP RISER (0.079" THICK)	48" BITUMINOUS COATED CSP RISER (0.079" THICK)	18" ALTERNATIVE FLARED END SECTION	24" ALTERNATIVE FLARED END SECTION	48" ALTERNATIVE FLARED END SECTION	ROCK SLOPE PROTECTION (FACING, METHOD B)	ROCK SLOPE PROTECTION FABRIC	MISCELLANEOUS IRON AND STEEL	FRAME & GRATE (24-12) (N)	ELBOW (N)	CONCRETE COLLAR (N)	"H" OR "V"	MAXIMUM COVER	PIPE JOINT CLASSIFICATION	DESCRIPTION	STATION	DRAINAGE PLAN SHEET No.	DRAINAGE SYSTEM No. ⬡	DRAINAGE UNIT ◯
		LF	EA	LF	EA	EA	EA	CY	EA	CY	TON	SQYD	CY	CY	LF	LF	LF	LF	LF	LF	LF	LF	LF	EA	EA	EA	CY	SQYD	LB	EA	EA	EA	FT	FT						
3A	g		1							1.84																									Abn INLET		D-3	3A	g
	h	48.0								3.14																									Abn 18" RCP				h
	i		1							1.82																									Abn INLET				i
	j																														1				Conc COLLAR	78' Lt "B" 605+00			j
	k													5.4																					24" APC				k
	l			5.4																															REMOVE 18" CMP				l
4	a				1																														REMOVE INLET	71.9' Rt "B" 605+00	D-3	4	a
	b													20.5																			2.8	S	24" APC				b
	c												1.76																652	2			4.37			GD-1 INLET	93' Rt "B" 605+00			c
	d													57.0																			2.7	S	24" APC				d
	e												1.81																652	2			4.53			GD-1 INLET	93' Rt "B" 605+60			e
	f													321.0																			2.9	S	24" APC				f
	g												1.80																652	2			4.52			GD-1 INLET	93' Rt "B" 608+84			g
	h																51.0																2.9	S	18" APC				h
	i												1.73																652	2			4.28			GD-1 INLET	93' Rt "B" 609+38			i
	j																67.0																2.7	S	18" APC				j
	k												1.54																652	2			3.62			GD-1 INLET	93' Rt "B" 604+30			k
	l															8.22	93.0																2.0	S	18" APC w/ PIPE ENCASEMENT				l
	m												1.32																652	2			2.86			GD-1 INLET	93' Rt "B" 603+34			m
	n																											9.0							GLD				n
	o																											6.0							GLD				o
	p		1							1.64																									Abn INLET	72.8' Rt "B" 603+73.2			p
	q	48.0								3.14																									Abn 18" RCP				q
	r		1							1.79																									Abn INLET	72.9' Rt "B" 604+24.2			r
	s	72.0								4.71																									Abn 18" RCP				s
	t	48.0								3.14																									Abn 18" RCP				t
	u		1							1.64																									Abn INLET	72.7' Rt "B" 605+51.2			u
SHEET TOTAL		216.0	5	5.4	1					22.9			10.0	8.2	211.0	403.9						15.0							3912	12		1				SHEET TOTALS				

DRAINAGE QUANTITIES

DQ-3

STATE OF CALIFORNIA - DEPARTMENT OF TRANSPORTATION
Caltrans
CONSULTANT FUNCTIONAL SUPERVISOR: THOMAS IONTA
CALCULATED-DESIGNED BY: EDELYNE MIGUEL
CHECKED BY: ROBERT HENDERSON
REVISED BY
DATE REVISED

LAST REVISION 00-00-00
DATE PLOTTED => 25-JAN-2010
TIME PLOTTED => 08:30

BORDER LAST REVISED 4/11/2008
RELATIVE BORDER SCALE IS IN INCHES 0 1 2 3
USERNAME => trmnguye
DGN FILE => c0F032id003.dgn
CU 12220
EA 0F0321

Dist	COUNTY	ROUTE	POST MILES TOTAL PROJECT	SHEET No.	TOTAL SHEETS
12	Ora	57	18.4/20.9	142	856

REGISTERED CIVIL ENGINEER — 06/15/09 DATE

ROBERT M. HENDERSON No. C66736 Exp. 09/30/10 CIVIL — REGISTERED PROFESSIONAL ENGINEER — STATE OF CALIFORNIA

1-25-10
PLANS APPROVAL DATE

THE STATE OF CALIFORNIA OR ITS OFFICERS OR AGENTS SHALL NOT BE RESPONSIBLE FOR THE ACCURACY OR COMPLETENESS OF SCANNED COPIES OF THIS PLAN SHEET.

CH2M HILL
6 HUTTON CENTRE DRIVE,
SUITE 700
SANTA ANA, CA 92707

OCTA
550 S. MAIN STREET
ORANGE, CA 92863

DRAINAGE SYSTEM No. ⬡	DRAINAGE UNIT ◯	ABANDON CULVERT	ABANDON INLET	REMOVE PIPE	REMOVE INLET	REMOVE HEADWALL	ADJUST INLET	REMOVE CONCRETE	CAP INLET	SAND BACKFILL	HOT MIX ASPHALT (TYPE A)	PLACE HOT MIX ASPHALT (MISCELLANEOUS AREA)	MINOR CONCRETE (MINOR STRUCTURE)	MINOR CONCRETE (BACKFILL)	APC 18"	APC 24"	APC 36"	APC 48"	18" BITUMINOUS COATED CSP (0.079" THICK)	36" BITUMINOUS COATED CSP (0.079" THICK)	GRATED LINE DRAIN	18" BITUMINOUS COATED CSP RISER (0.079" THICK)	48" BITUMINOUS COATED CSP RISER (0.079" THICK)	18" ALTERNATIVE FLARED END SECTION	24" ALTERNATIVE FLARED END SECTION	48" ALTERNATIVE FLARED END SECTION	ROCK SLOPE PROTECTION (FACING, METHOD B)	ROCK SLOPE PROTECTION FABRIC	MISCELLANEOUS IRON AND STEEL	FRAME & GRATE (24-12) (N)	ELBOW (N)	CONCRETE COLLAR (N)	"H" OR "V"	MAXIMUM COVER	PIPE JOINT CLASSIFICATION	DESCRIPTION	STATION	DRAINAGE PLAN SHEET No.	DRAINAGE SYSTEM No. ⬡	DRAINAGE UNIT ◯
		LF	EA	LF	EA	EA	EA	CY	EA	CY	TON	SQYD	CY	CY	LF	LF	LF	LF	LF	LF	LF	LF	LF	EA	EA	EA	CY	SQYD	LB	EA	EA	EA	FT	FT						
4	v	48.0								3.14																										Abn 18" RCP		D-3	4	v
	w		1							1.64																										Abn INLET	73.0′ Rt "B" 606+02.3			w
	x																														1				Conc COLLAR	70.0′ Lt "B" 605+00			x
5	a																							1												18" AFES	152.4′ Rt "B" 616+00	D-4	5	a
	b																			5.0													3.7	S	18" Bit Ctd CSP				b
	c																														1				CSP ELBOW				c
	d																			56.9													3.7	D	18" Bit Ctd CSP				d
	e																														1				CSP ELBOW				e
	f																			9.5													11.0	S	18" Bit Ctd CSP				f
	g																						6.0												18" Bit Ctd CSP RISER				g
	h											1.93																	652	2			4.95			GD-1 INLET	93′ Rt "B" 616+00			h
	i											0.33																							BULKHEAD				i
6	a											5.44																								TRANSITION STRUCTURE No. 1	159.97′ Rt "B" 617+22.77	D-4	6	a
	b											2.44																								Conc Chnl				b
	c											0.74																								TRANSITION STRUCTURE No. 2	99.60′ Rt "B" 619+91.16			c
	d							6.85																											REMOVE Conc Chnl				d
7	a	70.0								8.14																										Abn 24" RCP		D-4	7	a
	b		1							1.64																										Abn INLET	75.1′ Rt "B" 623+59.8			b
	c	36.0								2.36																										Abn 18" RCP				c
	d		1							1.89																										Abn INLET	76.3′ Rt "B" 623+99.3			d
8	a											0.55																								JUNCTION STRUCTURE No. 1	112.07′ Rt "B" 636+24.06	D-5	8	a
	b															5.5																	12.8	S	24" APC				b
	c																						9.1												18" Bit Ctd CSP RISER				c
	d											1.79																	652	2			4.48			GD-1 INLET	105′ Rt "B" 636+20			d
SHEET TOTAL		154.0	3					6.9		18.8		13.2			5.5				71.4			15.1		1					1304	4	2	1				SHEET TOTALS				

DRAINAGE QUANTITIES

DQ-4

CALCULATED-DESIGNED BY
CHECKED BY
CONSULTANT FUNCTIONAL SUPERVISOR: THOMAS IONTA
REVISED BY
DATE REVISED
EDELYNE MIGUEL
ROBERT HENDERSON

STATE OF CALIFORNIA - DEPARTMENT OF TRANSPORTATION
Caltrans

LAST REVISION 00-00-00
DATE PLOTTED => 25-JAN-2010
TIME PLOTTED => 08:31

BORDER LAST REVISED 4/11/2008
RELATIVE BORDER SCALE IS IN INCHES 0 1 2 3
USERNAME => trmnguye
DGN FILE => c0F032id004.dgn
CU 12220
EA 0F0321

Dist	COUNTY	ROUTE	POST MILES TOTAL PROJECT	SHEET No.	TOTAL SHEETS
12	Ora	57	18.4/20.9	143	856

REGISTERED CIVIL ENGINEER — 06/15/09 DATE

1-25-10
PLANS APPROVAL DATE

ROBERT M. HENDERSON
No. C66736
Exp. 09/30/10
CIVIL
REGISTERED PROFESSIONAL ENGINEER
STATE OF CALIFORNIA

THE STATE OF CALIFORNIA OR ITS OFFICERS OR AGENTS SHALL NOT BE RESPONSIBLE FOR THE ACCURACY OR COMPLETENESS OF SCANNED COPIES OF THIS PLAN SHEET.

CH2M HILL
6 HUTTON CENTRE DRIVE,
SUITE 700
SANTA ANA, CA 92707

OCTA
550 S. MAIN STREET
ORANGE, CA 92863

DRAINAGE SYSTEM No. ⬡	DRAINAGE UNIT ◯	ABANDON CULVERT	ABANDON INLET	REMOVE PIPE	REMOVE INLET	REMOVE HEADWALL	ADJUST INLET	REMOVE CONCRETE	CAP INLET	SAND BACKFILL	HOT MIX ASPHALT (TYPE A)	PLACE HOT MIX ASPHALT (MISCELLANEOUS AREA)	MINOR CONCRETE (MINOR STRUCTURE)	MINOR CONCRETE (BACKFILL)	APC 18"	APC 24"	APC 36"	APC 48"	18" BITUMINOUS COATED CSP (0.079" THICK)	36" BITUMINOUS COATED CSP (0.079" THICK)	GRATED LINE DRAIN	18" BITUMINOUS COATED CSP RISER (0.079" THICK)	48" BITUMINOUS COATED CSP RISER (0.079" THICK)	18" ALTERNATIVE FLARED END SECTION	24" ALTERNATIVE FLARED END SECTION	48" ALTERNATIVE FLARED END SECTION	ROCK SLOPE PROTECTION (FACING, METHOD B)	ROCK SLOPE PROTECTION FABRIC	MISCELLANEOUS IRON AND STEEL	FRAME & GRATE (24-12) (N)	ELBOW (N)	CONCRETE COLLAR (N)	"H" OR "V"	MAXIMUM COVER	PIPE JOINT CLASSIFICATION	DESCRIPTION	STATION	DRAINAGE PLAN SHEET No.	DRAINAGE SYSTEM No. ⬡	DRAINAGE UNIT ◯
		LF	EA	LF	EA	EA	EA	CY	EA	CY	TON	SQYD	CY	CY	LF	LF	LF	LF	LF	LF	LF	LF	LF	EA	EA	EA	CY	SQYD	LB	EA	EA	EA	FT	FT					
8	e															121.2																		2.6	S	24" APC		D-5	8	e
	f												1.88																652	2			4.77			GD-1 INLET	105' Rt "B" 635+00			f
	g															201.9																	2.6	S	24" APC				g
	h												1.86																652	2			4.73			GD-1 INLET	105' Rt "B" 633+02			h
	i														57.2																		3.1	S	18" APC				i
	j												1.57																652	2			3.73			GD-1 INLET	116.50' Rt "B" 632+45			j
	k							6.79																												REMOVE Conc DITCH				k
	l					1																														REMOVE HW	102.1' Rt "B" 635+01.3			l
	m	58.0								3.80																										Abn 18" CMP				m
	n		1							1.60																										Abn INLET	75.6' Rt "B" 634+49.3			n
	o	20.0								1.31																										Abn 18" CMP				o
	p		1							1.64																										Abn INLET	75.9' Rt "B" 634+26.7			p
	q												0.33																								BULKHEAD				q
9	a																											5.0	14.9							RSP (FACING, METHOD B)		D-6	9	a
	b																									1										24" AFES	40' Lt "J-5" 46+40			b
	c															70.0																		S	24" APC				c
	d												1.56																326	1			3.70			G1 INLET	32' Rt "J-5" 46+40			d
	e														25.5																		1.8	S	18" APC				e
	f												1.48																326	1			3.43			G1 INLET	32' Rt "J-5" 46+10			f
	g														16.0																		2.1	S	18" APC				g
	h												1.48																326	1			3.43			G1 INLET	32.35' Rt "J-5" 45+90			h
	i		1							1.64																										Abn INLET	0.42' Rt "J-5" 45+86.75			i
	j	20.0								1.31																										Abn 18" RCP				j
	k		1							1.72																										Abn INLET	1.80' Rt "J-5" 46+09.73			k
	l	22.0								1.44																										Abn 18" RCP				l
	m		1							2.08																										Abn INLET	2.89' Rt "J-5" 46+36.12			m
	n	47.0								3.08																										Abn 18" RCP				n
SHEET TOTAL		167.0	5			1		6.8		19.6			10.2		98.7	393.1										1		5.0	14.9	2934	9						SHEET TOTALS				

DRAINAGE QUANTITIES

DQ-5

CALCULATED-DESIGNED BY
CHECKED BY
REVISED BY
DATE REVISED
EDELYNE MIGUEL
ROBERT HENDERSON
CONSULTANT FUNCTIONAL SUPERVISOR
THOMAS IONTA
STATE OF CALIFORNIA - DEPARTMENT OF TRANSPORTATION
Gtans

LAST REVISION 00-00-00
DATE PLOTTED => 25-JAN-2010
TIME PLOTTED => 08:41

BORDER LAST REVISED 4/11/2008
RELATIVE BORDER SCALE IS IN INCHES 0 1 2 3
USERNAME => trmnguye
DGN FILE => c0F032id005.dgn
CU 12220
EA 0F0321

Dist	COUNTY	ROUTE	POST MILES TOTAL PROJECT	SHEET No.	TOTAL SHEETS
12	Ora	57	18.4/20.9	144	856

REGISTERED CIVIL ENGINEER — 06/15/09 DATE

1-25-10
PLANS APPROVAL DATE

REGISTERED PROFESSIONAL ENGINEER
ROBERT M. HENDERSON
No. C66736
Exp. 09/30/10
CIVIL
STATE OF CALIFORNIA

THE STATE OF CALIFORNIA OR ITS OFFICERS OR AGENTS SHALL NOT BE RESPONSIBLE FOR THE ACCURACY OR COMPLETENESS OF SCANNED COPIES OF THIS PLAN SHEET.

CH2M HILL
6 HUTTON CENTRE DRIVE,
SUITE 700
SANTA ANA, CA 92707

OCTA
550 S. MAIN STREET
ORANGE, CA 92863

DRAINAGE SYSTEM No. ⬡	DRAINAGE UNIT ○	ABANDON CULVERT	ABANDON INLET	REMOVE PIPE	REMOVE INLET	REMOVE HEADWALL	ADJUST INLET	REMOVE CONCRETE	CAP INLET	SAND BACKFILL	HOT MIX ASPHALT (TYPE A)	PLACE HOT MIX ASPHALT (MISCELLANEOUS AREA)	MINOR CONCRETE (MINOR STRUCTURE)	MINOR CONCRETE (BACKFILL)	APC 18"	APC 24"	APC 36"	APC 48"	18" BITUMINOUS COATED CSP (0.079" THICK)	36" BITUMINOUS COATED CSP (0.079" THICK)	GRATED LINE DRAIN	18" BITUMINOUS COATED CSP RISER (0.079" THICK)	48" BITUMINOUS COATED CSP RISER (0.079" THICK)	18" ALTERNATIVE FLARED END SECTION	24" ALTERNATIVE FLARED END SECTION	48" ALTERNATIVE FLARED END SECTION	ROCK SLOPE PROTECTION (FACING, METHOD B)	ROCK SLOPE PROTECTION FABRIC	MISCELLANEOUS IRON AND STEEL	FRAME & GRATE (24-12) (N)	ELBOW (N)	CONCRETE COLLAR (N)	"H" OR "V"	MAXIMUM COVER	PIPE JOINT CLASSIFICATION	DESCRIPTION	STATION	DRAINAGE PLAN SHEET No.	DRAINAGE SYSTEM No. ⬡	DRAINAGE UNIT ○
		LF	EA	LF	EA	EA	EA	CY	EA	CY	TON	SQYD	CY	CY	LF	LF	LF	LF	LF	LF	LF	LF	LF	LF	EA	EA	EA	CY	SQYD	LB	EA	EA	EA	FT	FT					
9	o		1							1.64																											Abn INLET	6.31′ Rt "J-5" 46+86.57	D-6	9	o
	p	74.0								8.61																											Abn 24" RCP				p
	q										0.3	1.5																									HMA OSD	93′ Rt "B" 645+90			q
	r																											7.4	20.0								RSP (FACING, METHOD B)				r
10	a																															1					Conc COLLAR	120.20′ Rt "B" 647+39	D-6	10	a
	b																80.8																	5.4	S		36" APC				b
	c																															1					Conc COLLAR	135.40′ Rt "B" 648+23.80	D-7		c
	d																		25.0															2.5	S		36" Bit Ctd CSP				d
	e												7.00						5.0		7.2								546								DUAL WATER QUALITY RISER	141.00′ Rt "B" 648+62.00			e
	f			137.8																																	REMOVE PIPE		D-6		f
11	a																											24.4	52.9								RSP (FACING, METHOD B)		D-7	11	a
	b																										1										48" AFES	48′ Lt "J-4" 51+00			b
	c																	19.0															1.7	S		48" APC				c
	d												1.87																326	1			5.20				G2 INLET w/ Conc APRON	38′ Lt "J-4" 51+14			d
	e																	72.0															5.8	S		48" APC				e
	f												2.45																326	1			7.47				G2 INLET w/ Conc APRON	15′ Lt "J-4" 51+75.60			f
	g															28.2																	5.4	S		24" APC				g
	h						1																										5.48				Adj INLET	9.50′ Lt "J-4" 52+04			h
	i								1																												CAP INLET	4.63′ Lt "J-4" 52+75.46			i
	j										0.3	1.5																									HMA OSD	96.75′ Rt "B" 651+41.69			j
	k			190.0																																	REMOVE 36" RCP				k
12	a																											8.9	23.8								RSP (FACING, METHOD B)		D-7	12	a
	b																								1												18" AFES	59.20′ Lt "J-4" 50+26			b
	c														26.0																			4.4	S		18" APC				c
	d												2.08																326	1			5.00				GMP INLET AT Chnl END	51.33′ Lt "J-4" 50+07.16			d
SHEET TOTAL		74.0	1	327.8			1		1	10.3	0.6	3.1	13.4		26.0	28.2	80.8	91.0		30.0			7.2	1		1	40.7	96.7	1524	3		2					SHEET TOTALS				

DRAINAGE QUANTITIES

DQ-6

STATE OF CALIFORNIA - DEPARTMENT OF TRANSPORTATION
Caltrans

CONSULTANT FUNCTIONAL SUPERVISOR: THOMAS IONTA

CALCULATED-DESIGNED BY: EDELYNE MIGUEL
CHECKED BY: ROBERT HENDERSON

REVISED BY | DATE REVISED

LAST REVISION: DATE PLOTTED => 25-JAN-2010
00-00-00 TIME PLOTTED => 08:42

BORDER LAST REVISED 4/11/2008

RELATIVE BORDER SCALE IS IN INCHES 0 1 2 3

USERNAME => trmnguye
DGN FILE => c0F032id006.dgn

CU 12220

EA 0F0321

Dist	COUNTY	ROUTE	POST MILES TOTAL PROJECT	SHEET No.	TOTAL SHEETS
12	Ora	57	18.4/20.9	145	856

REGISTERED CIVIL ENGINEER — 06/15/09 DATE

1-25-10
PLANS APPROVAL DATE

ROBERT M. HENDERSON No. C66736 Exp. 09/30/10 CIVIL — REGISTERED PROFESSIONAL ENGINEER — STATE OF CALIFORNIA

THE STATE OF CALIFORNIA OR ITS OFFICERS OR AGENTS SHALL NOT BE RESPONSIBLE FOR THE ACCURACY OR COMPLETENESS OF SCANNED COPIES OF THIS PLAN SHEET.

CH2M HILL
6 HUTTON CENTRE DRIVE,
SUITE 700
SANTA ANA, CA 92707

OCTA
550 S. MAIN STREET
ORANGE, CA 92863

DRAINAGE SYSTEM No. ⬡	DRAINAGE UNIT ◯	ABANDON CULVERT	ABANDON INLET	REMOVE PIPE	REMOVE INLET	REMOVE HEADWALL	ADJUST INLET	REMOVE CONCRETE	CAP INLET	SAND BACKFILL	HOT MIX ASPHALT (TYPE A)	PLACE HOT MIX ASPHALT (MISCELLANEOUS AREA)	MINOR CONCRETE (MINOR STRUCTURE)	MINOR CONCRETE (BACKFILL)	APC 18"	APC 24"	APC 36"	APC 48"	18" BITUMINOUS COATED CSP (0.079" THICK)	36" BITUMINOUS COATED CSP (0.079" THICK)	GRATED LINE DRAIN	18" BITUMINOUS COATED CSP RISER (0.079" THICK)	48" BITUMINOUS COATED CSP RISER (0.079" THICK)	18" ALTERNATIVE FLARED END SECTION	24" ALTERNATIVE FLARED END SECTION	48" ALTERNATIVE FLARED END SECTION	ROCK SLOPE PROTECTION (FACING, METHOD B)	ROCK SLOPE PROTECTION FABRIC	MISCELLANEOUS IRON AND STEEL	FRAME & GRATE (24-12) (N)	ELBOW (N)	CONCRETE COLLAR (N)	"H" OR "V"	MAXIMUM COVER	PIPE JOINT CLASSIFICATION	DESCRIPTION	STATION	DRAINAGE PLAN SHEET No.	DRAINAGE SYSTEM No. ⬡	DRAINAGE UNIT ◯
		LF	EA	LF	EA	EA	EA	CY	EA	CY	TON	SQYD	CY	CY	LF	LF	LF	LF	LF	LF	LF	LF	LF	EA	EA	EA	CY	SQYD	LB	EA	EA	EA	FT	FT						
12	e												6.30																							Conc Chnl		D-7	12	e
	f												0.46																							TRANSITION STRUCTURE No. 3	40.75' Lt "J-4" 49+58			f
13	a																46.8																	5.5	S	36" APC		D-7	13	a
	b												1.52																652	2		3.56			GD-1 INLET w/ Conc APRON	35' Rt "J-4" 51+75.60			b
	c															225.4																	16.4	S	24" APC				c
	d												7.90																174			18.58			OS INLET	49.77' Rt "IH" 657+01.14			d
	e										0.3	1.5																							HMA OSD	33' Rt "J-4" 46+34			e
	f			107.7																															REMOVE 18" RCP				f
	g	48.0								5.59																									Abn 24" RCP				g
	h		1							1.64																									Abn INLET	6.89' Lt "J-4" 50+47.68			h
	i	38.0								4.42																									Abn 24" RCP				i
	j		1							1.87																									Abn INLET	7.88' Lt "J-4" 50+93.36			j
	k	30.0								3.49																									Abn 24" RCP				k
	l		1							2.09																									Abn INLET	8.93' Lt "J-4" 51+22.02			l
	m	48.0								5.59																									Abn 24" RCP				m
	n		1							1.91																									Abn INLET	9.40' Lt "J-4" 51+59.04			n
14	a												1.92																652	2		4.93			GD-1 INLET	34' Rt "J-6" 57+88	D-7	14	a
	b															145.6																	2.8	S	24" APC				b
	c																														1				Conc COLLAR	32.50' Rt "J-6" 59+40	D-8		c
	d															104.9																	2.8	S	24" APC				d
	e												1.82																652	2		4.58			GD-1 INLET	34' Rt "J-6" 60+50			e
	f															20.3																	2.6	S	24" APC				f
	g												1.88																652	2		4.77			GD-1 INLET	34' Rt "J-6" 60+74			g
	h															22.4																	2.6	S	24" APC				h
	i												1.85																652	2		4.67			GD-1 INLET	34' Rt "J-6" 61+00			i
	j															194.7																	3.0	S	24" APC				j
SHEET TOTAL		164.0	4	107.7						26.6	0.3	1.5	23.7			713.3	46.8												3434	10		1				SHEET TOTALS				

DRAINAGE QUANTITIES

DQ-7

STATE OF CALIFORNIA - DEPARTMENT OF TRANSPORTATION
Caltrans

CONSULTANT FUNCTIONAL SUPERVISOR: THOMAS IONTA
CALCULATED-DESIGNED BY:
CHECKED BY: ROBERT HENDERSON
REVISED BY: EDELYNE MIGUEL
DATE REVISED:

LAST REVISION: 00-00-00
DATE PLOTTED => 25-JAN-2010
TIME PLOTTED => 08:43

BORDER LAST REVISED 4/11/2008

RELATIVE BORDER SCALE IS IN INCHES 0 1 2 3

USERNAME => trmnguye
DGN FILE => c0F032id007.dgn

CU 12220

EA 0F0321

Dist	COUNTY	ROUTE	POST MILES TOTAL PROJECT	SHEET No.	TOTAL SHEETS
12	Ora	57	18.4/20.9	146	856

REGISTERED CIVIL ENGINEER — 06/15/09 DATE

1-25-10
PLANS APPROVAL DATE

ROBERT M. HENDERSON
No. C66736
Exp. 09/30/10
CIVIL
REGISTERED PROFESSIONAL ENGINEER
STATE OF CALIFORNIA

THE STATE OF CALIFORNIA OR ITS OFFICERS OR AGENTS SHALL NOT BE RESPONSIBLE FOR THE ACCURACY OR COMPLETENESS OF SCANNED COPIES OF THIS PLAN SHEET.

CH2M HILL
6 HUTTON CENTRE DRIVE,
SUITE 700
SANTA ANA, CA 92707

OCTA
550 S. MAIN STREET
ORANGE, CA 92863

DRAINAGE SYSTEM No. ⬡	DRAINAGE UNIT ○	ABANDON CULVERT	ABANDON INLET	REMOVE PIPE	REMOVE INLET	REMOVE HEADWALL	ADJUST INLET	REMOVE CONCRETE	CAP INLET	SAND BACKFILL	HOT MIX ASPHALT (TYPE A)	PLACE HOT MIX ASPHALT (MISCELLANEOUS AREA)	MINOR CONCRETE (MINOR STRUCTURE)	MINOR CONCRETE (BACKFILL)	APC 18"	APC 24"	APC 36"	APC 48"	18" BITUMINOUS COATED CSP (0.079" THICK)	36" BITUMINOUS COATED CSP (0.079" THICK)	GRATED LINE DRAIN	18" BITUMINOUS COATED CSP RISER (0.079" THICK)	48" BITUMINOUS COATED CSP RISER (0.079" THICK)	18" ALTERNATIVE FLARED END SECTION	24" ALTERNATIVE FLARED END SECTION	48" ALTERNATIVE FLARED END SECTION	ROCK SLOPE PROTECTION (FACING, METHOD B)	ROCK SLOPE PROTECTION FABRIC	MISCELLANEOUS IRON AND STEEL	FRAME & GRATE (24-12) (N)	ELBOW (N)	CONCRETE COLLAR (N)	"H" OR "V"	MAXIMUM COVER	PIPE JOINT CLASSIFICATION	DESCRIPTION	STATION	DRAINAGE PLAN SHEET No.	DRAINAGE SYSTEM No. ⬡	DRAINAGE UNIT ○
		LF	EA	LF	EA	EA	EA	CY	EA	CY	TON	SQYD	CY	CY	LF	LF	LF	LF	LF	LF	LF	LF	LF	LF	EA	EA	EA	CY	SQYD	LB	EA	EA	EA	FT	FT					
14	k												1.99																	652	2			5.18			GD-1 INLET	36.09′ Rt "J-6" 63+00	D-8	14	k
	l															294.8																			3.2	S	24" APC				l
	m												1.81																	652	2			4.53			GD-1 INLET	22′ Rt "J-6" 66+00			m
	n								1																											CAP INLET	78′ Rt "C" 658+90	D-7		n
15	a																											10.1	26.0							RSP (FACING, METHOD B)		D-7	15	a
	b																								1											24" AFES	137.20′ Rt "B" 649+06			b
	c															32.0																		3.5	S	24" APC				c
	d												1.39																	326	1			5.00			G1 INLET	104.20′ Rt "B" 649+06			d
	e															8.6																		2.3	S	24" APC				e
	f																																1				Conc COLLAR	95.37′ Rt "B" 649+06			f
	g	39.0								4.54																											Abn 24" RCP				g
	h				1																																REMOVE INLET	130.63′ Rt "B" 648+87.19			h
	i																79.2																		3.3	S	18" APC				i
	j												1.84																	326	1			3.95			G1 INLET w/ Conc APRON	111.70′ Rt "B" 648+20			j
16	a																																1				Conc COLLAR	63′ Rt "B" 670+23.38	D-8	16	a
	b															47.2																		3.8	S	24" APC				b
	c												1.91																	652	2			4.89			GD-1 INLET	114.13′ Rt "B" 670+23.38			c
	d													4.27	70.4																			3.3	S	18" APC w/ PIPE ENCASEMENT				d
	e												1.32																	652	2			2.86			GD-1 INLET	115.60′ Rt "B" 669+50			e
	f														73.7																			3.4	S	18" APC				f
	g												1.40																	326	1			5.06			G1 INLET	112.60′ Rt "B" 671+00	D-9		g
	h																																				REMOVE INLET	81.21′ Rt "B" 670+24.62	D-8		h
	i			19.1																																	REMOVE 18" CMP				i
17	a																																1				Conc COLLAR	79.72′ Rt "B" 660+09.40	D-8	17	a
	b															49.2																		2.8	S	24" APC				b
SHEET TOTAL		39.0		19.1	1				1	4.5			11.7	4.3	223.3	431.8								1		10.1	26.0	3586	11			3				SHEET TOTALS				

DRAINAGE QUANTITIES

DQ-8

CALCULATED-DESIGNED BY: EDELYNE MIGUEL
CHECKED BY: ROBERT HENDERSON
REVISED BY
DATE REVISED
CONSULTANT FUNCTIONAL SUPERVISOR: THOMAS IONTA
STATE OF CALIFORNIA - DEPARTMENT OF TRANSPORTATION
Gibbons

LAST REVISION 00-00-00
DATE PLOTTED => 25-JAN-2010
TIME PLOTTED => 08:44

BORDER LAST REVISED 4/11/2008
RELATIVE BORDER SCALE IS IN INCHES 0 1 2 3
USERNAME => trmnguye
DGN FILE => c0F032id008.dgn
CU 12220
EA 0F0321

Dist	COUNTY	ROUTE	POST MILES TOTAL PROJECT	SHEET No.	TOTAL SHEETS
12	Ora	57	18.4/20.9	147	856

REGISTERED CIVIL ENGINEER — 06/15/09 DATE

ROBERT M. HENDERSON No. C66736 Exp. 09/30/10 CIVIL — REGISTERED PROFESSIONAL ENGINEER — STATE OF CALIFORNIA

1-25-10
PLANS APPROVAL DATE

THE STATE OF CALIFORNIA OR ITS OFFICERS OR AGENTS SHALL NOT BE RESPONSIBLE FOR THE ACCURACY OR COMPLETENESS OF SCANNED COPIES OF THIS PLAN SHEET.

CH2M HILL
6 HUTTON CENTRE DRIVE,
SUITE 700
SANTA ANA, CA 92707

OCTA
550 S. MAIN STREET
ORANGE, CA 92863

DRAINAGE SYSTEM No. ⬡	DRAINAGE UNIT ◯	ABANDON CULVERT	ABANDON INLET	REMOVE PIPE	REMOVE INLET	REMOVE HEADWALL	ADJUST INLET	REMOVE CONCRETE	CAP INLET	SAND BACKFILL	HOT MIX ASPHALT (TYPE A)	PLACE HOT MIX ASPHALT (MISCELLANEOUS AREA)	MINOR CONCRETE (MINOR STRUCTURE)	MINOR CONCRETE (BACKFILL)	APC 18"	APC 24"	APC 36"	APC 48"	18" BITUMINOUS COATED CSP (0.079" THICK)	36" BITUMINOUS COATED CSP (0.079" THICK)	GRATED LINE DRAIN	18" BITUMINOUS COATED CSP RISER (0.079" THICK)	48" BITUMINOUS COATED CSP RISER (0.079" THICK)	18" ALTERNATIVE FLARED END SECTION	24" ALTERNATIVE FLARED END SECTION	48" ALTERNATIVE FLARED END SECTION	ROCK SLOPE PROTECTION (FACING, METHOD B)	ROCK SLOPE PROTECTION FABRIC	MISCELLANEOUS IRON AND STEEL	FRAME & GRATE (24-12) (N)	ELBOW (N)	CONCRETE COLLAR (N)	"H" OR "V"	MAXIMUM COVER	PIPE JOINT CLASSIFICATION	DESCRIPTION	STATION	DRAINAGE PLAN SHEET No.	DRAINAGE SYSTEM No. ⬡	DRAINAGE UNIT ◯
		LF	EA	LF	EA	EA	EA	CY	EA	CY	TON	SQYD	CY	CY	LF	LF	LF	LF	LF	LF	LF	LF	LF	LF	EA	EA	EA	CY	SQYD	LB	EA	EA	EA	FT	FT					
17	c												1.63																	652	2			3.93			GD-1 INLET	107.93′ Rt "B" 660+54	D-8	17	c
	d															51.8																				7.0	S	24" APC				d
	e	88.0								10.24																												Abn 24" RCP				e
	f		1							1.89																												Abn INLET	120.34′ Rt "B" 660+59.75			f
	g	19.0								1.24																												Abn 18" RCP				g
	h		1							2.11																												Abn INLET	114.90′ Rt "B" 660+83.45			h
	i	48.0								3.14																												Abn 18" RCP				i
	j		1							2.15																												Abn INLET	110.21′ Rt "B" 661+37.04			j
	k	40.0								2.62																												Abn 18" RCP				k
	l		1							1.89																												Abn INLET	105.39′ Rt "B" 661+81.10			l
	m	32.0								2.09																												Abn 18" RCP				m
	n		1							1.89																												Abn INLET	101.39′ Rt "B" 662+17.93			n
18	a		1							1.87																												Abn INLET	81.08" Rt "B" 683+88.23	D-10	18	a
	b	86.0								5.63																												Abn 18" RCP				b
19	a								1																													CAP INLET	78.81′ Rt "B" 696+01.10	D-11	19	a
20	a												6.23																	652	2			13.99			GD-1 INLET	34′ Rt "K-2" 8+35.17	D-11	20	a
	b														98.2																				9.2	S	18" APC				b
	c												1.78																	652	2			4.46			GD-1 INLET	34′ Rt "K-2" 9+36	D-12		c
	d														99.0																				2.9	S	18" APC				d
	e												1.79																	652	2			4.47			GD-1 INLET	34′ Rt "K-2" 10+38			e
	f														89.0																				2.9	S	18" APC				f
	g												1.80																	652	2			4.52			GD-1 INLET	34′ Rt "K-2" 11+30			g
	h																				73.0																GLD	"K-2" 9+38 TO 10+11			h
	i																				32.0																GLD	"K-2" 10+40 TO 10+72			i
	j														26.8																						18" APC				j
SHEET TOTAL		313.0	6						1	36.8			13.2		313.0	51.8					105.0								3260	10						SHEET TOTALS				

DRAINAGE QUANTITIES

DQ-9

STATE OF CALIFORNIA - DEPARTMENT OF TRANSPORTATION
Caltrans

CONSULTANT FUNCTIONAL SUPERVISOR: THOMAS IONTA

CALCULATED-DESIGNED BY: EDELYNE MIGUEL
CHECKED BY: ROBERT HENDERSON

REVISED BY | DATE REVISED

LAST REVISION | DATE PLOTTED => 25-JAN-2010 | TIME PLOTTED => 08:45 | 00-00-00

BORDER LAST REVISED 4/11/2008

RELATIVE BORDER SCALE IS IN INCHES 0 1 2 3

USERNAME => trmnguye
DGN FILE => c0F032id009.dgn

CU 12220

EA 0F0321

Dist	COUNTY	ROUTE	POST MILES TOTAL PROJECT	SHEET No.	TOTAL SHEETS
12	Ora	57	18.4/20.9	148	856

REGISTERED CIVIL ENGINEER — 06/15/09 DATE

1-25-10
PLANS APPROVAL DATE

ROBERT M. HENDERSON No. C66736 Exp. 09/30/10 CIVIL — REGISTERED PROFESSIONAL ENGINEER — STATE OF CALIFORNIA

THE STATE OF CALIFORNIA OR ITS OFFICERS OR AGENTS SHALL NOT BE RESPONSIBLE FOR THE ACCURACY OR COMPLETENESS OF SCANNED COPIES OF THIS PLAN SHEET.

CH2M HILL
6 HUTTON CENTRE DRIVE,
SUITE 700
SANTA ANA, CA 92707

OCTA
550 S. MAIN STREET
ORANGE, CA 92863

DRAINAGE SYSTEM No. ⬡	DRAINAGE UNIT ◯	ABANDON CULVERT	ABANDON INLET	REMOVE PIPE	REMOVE INLET	REMOVE HEADWALL	ADJUST INLET	REMOVE CONCRETE	CAP INLET	SAND BACKFILL	HOT MIX ASPHALT (TYPE A)	PLACE HOT MIX ASPHALT (MISCELLANEOUS AREA)	MINOR CONCRETE (MINOR STRUCTURE)	MINOR CONCRETE (BACKFILL)	APC 18"	APC 24"	APC 36"	APC 48"	18" BITUMINOUS COATED CSP (0.079" THICK)	36" BITUMINOUS COATED CSP (0.079" THICK)	GRATED LINE DRAIN	18" BITUMINOUS COATED CSP RISER (0.079" THICK)	48" BITUMINOUS COATED CSP RISER (0.079" THICK)	18" ALTERNATIVE FLARED END SECTION	24" ALTERNATIVE FLARED END SECTION	48" ALTERNATIVE FLARED END SECTION	ROCK SLOPE PROTECTION (FACING, METHOD B)	ROCK SLOPE PROTECTION FABRIC	MISCELLANEOUS IRON AND STEEL	FRAME & GRATE (24-12) (N)	ELBOW (N)	CONCRETE COLLAR (N)	"H" OR "V"	MAXIMUM COVER	PIPE JOINT CLASSIFICATION	DESCRIPTION	STATION	DRAINAGE PLAN SHEET No.	DRAINAGE SYSTEM No. ⬡	DRAINAGE UNIT ◯
		LF	EA	LF	EA	EA	EA	CY	EA	CY	TON	SQYD	CY	CY	LF	LF	LF	LF	LF	LF	LF	LF	LF	LF	LF	LF	CY	SQYD	LB	EA	EA	EA	FT	FT						
20	k																															1				Conc COLLAR		D-12	20	k
	l								1																										CAP INLET	8.57′ Rt "K-2" 9+47.88	D-11		l
	m	48.0								3.14																										Abn 18" RCP				m
	n								1																										CAP INLET	8.26′ Rt "K-2" 9+96.55			n
	o	32.0								2.09																										Abn 18" RCP				o
	p								1																										CAP INLET	8.14′ Rt "K-2" 8+60.22			p
	q	16.0								1.05																										Abn 18" RCP				q
	r								1																										CAP INLET	8′ Rt "K-2" 8+41.31			r
	s	24.7								1.62																										Abn 18" RCP				s
21	a								1																										CAP INLET	77.79′ Rt "B" 702+68.87	D-12	21	a
	b														21.3																		2.4	S	18" APC				b
	c												1.84																	326	1		3.91			G1 INLET w/ Conc APRON	87.64′ Rt "B" 702+91.58			c
	d														16.4																		4.2	S	18" APC				d
	e						1																													Adj INLET	10′ Lt "K-2" 12+99.10			e
	f												0.93																	326	1		2.90			G1 INLET	10′ Lt "K-2" 12+26			f
	g														64.1																		2.9	S	18" APC				g
	h	37.0								2.42																										Abn 18" RCP				h
	i										0.3	1.5																							HMA OSD	73.18′ Rt "B" 708+00			i
	j																												7.4	20.0						RSP (FACING , METHOD B)				j
22	a												5.34																	652	2		11.79			GD-1 INLET	34′ Rt "K-2" 12+89	D-12	22	a
	b															252.9																		2.4	S	24" APC				b
SHEET TOTAL		157.7					1		5	10.3	0.3	1.5	9.85		101.8	252.9												7.4	20.0	1956	6		1			SHEET TOTALS				
FROM Q-4													24.6																						FROM SHEET Q-4				
GRAND TOTAL		1903.4	26	463.5	6	1	2	(***) 13.6	10	193.6	(*) 1.2	(**) 6.1	164.9	12.5	1135.7	3514.6	127.6	91.0	71.4	30.0	379.0	18.2	7.2	2	2	1	63.3	157.6	31,364	94	4	11			GRAND TOTALS				

(*) - SEE Sht Q-4 FOR GRAND TOTAL OF HOT MIX ASPHALT (TYPE A)
(**) - SEE Sht Q-6 FOR GRAND TOTAL OF PLACE HOT MIX ASPHALT (MISCELLANEOUS AREA)
(***)- SEE Sht Q-11 FOR GRAND TOTAL OF REMOVE CONCRETE

DRAINAGE QUANTITIES

DQ-10

CALCULATED-DESIGNED BY: EDELYNE MIGUEL
CHECKED BY: ROBERT HENDERSON
CONSULTANT FUNCTIONAL SUPERVISOR: THOMAS IONTA
STATE OF CALIFORNIA - DEPARTMENT OF TRANSPORTATION
Caltrans

REVISED BY | DATE REVISED

LAST REVISION 00-00-00
DATE PLOTTED => 25-JAN-2010
TIME PLOTTED => 10:09

BORDER LAST REVISED 4/11/2008
RELATIVE BORDER SCALE IS IN INCHES 0 1 2 3
USERNAME => trstrk
DGN FILE => c0F032id010.dgn
CU 12220
EA 0F0321

Dist	COUNTY	ROUTE	POST MILES TOTAL PROJECT	SHEET No.	TOTAL SHEETS
12	Ora	57	18.4/20.9	149	856

11-16-09
REGISTERED CIVIL ENGINEER — DATE

ROBERT M. HENDERSON
No. C66736
Exp. 09/30/10
CIVIL
REGISTERED PROFESSIONAL ENGINEER
STATE OF CALIFORNIA

1-25-10
PLANS APPROVAL DATE

THE STATE OF CALIFORNIA OR ITS OFFICERS OR AGENTS SHALL NOT BE RESPONSIBLE FOR THE ACCURACY OR COMPLETENESS OF SCANNED COPIES OF THIS PLAN SHEET.

CH2M HILL
6 HUTTON CENTRE DRIVE,
SUITE 700
SANTA ANA, CA 92707

OCTA
550 S. MAIN STREET
ORANGE, CA 92863

NOTE:

1. FOR COMPLETE RIGHT OF WAY DATA, SEE RIGHT OF WAY RECORD MAPS AT DISTRICT OFFICE.

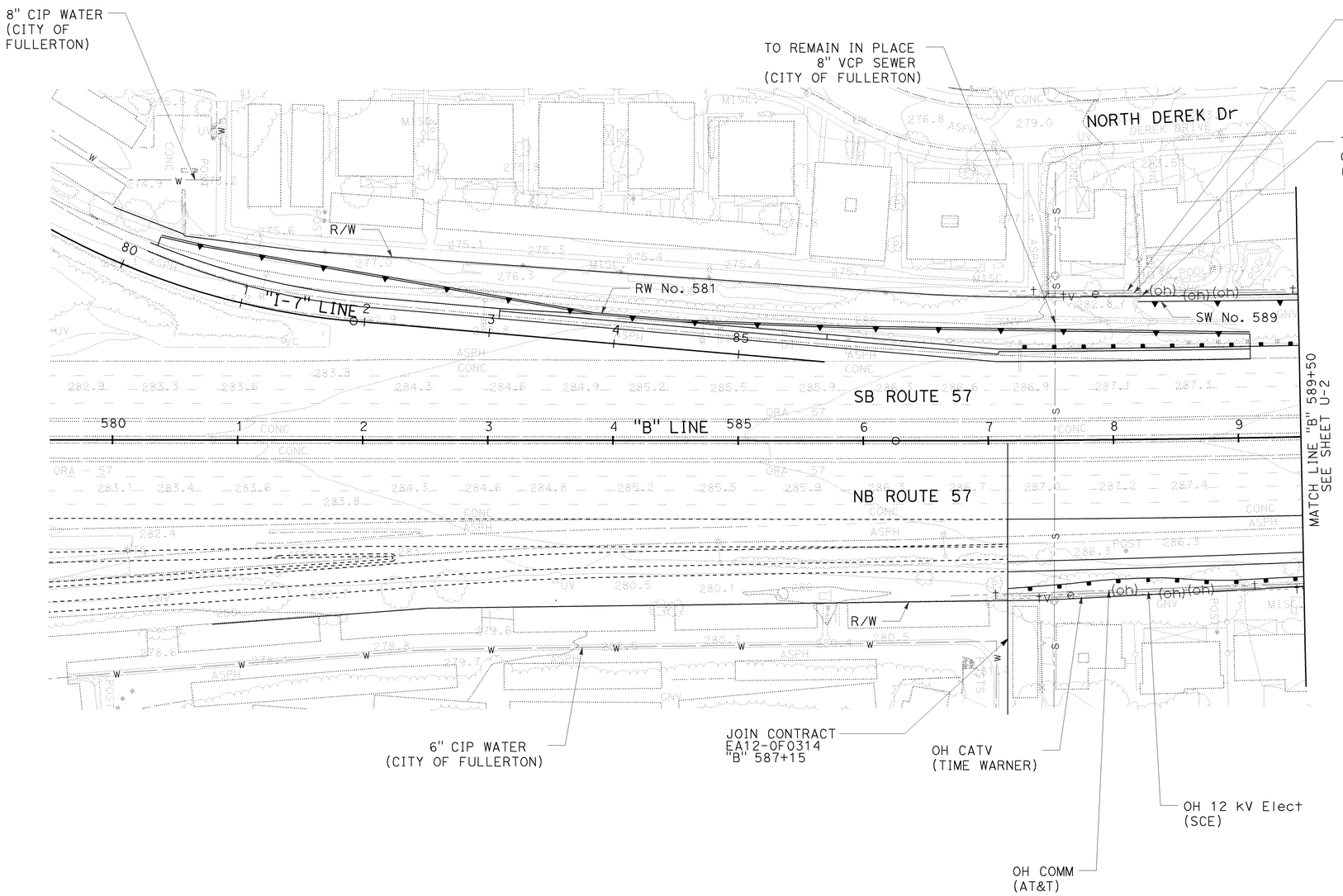

LEGEND:

- ⊕ - UTILITY POTHOLE LOCATION
- ⊞ - FEATURE LOCATION AS DESCRIBED
- [RE] - RELOCATE
- [- -] - REFERENCED DETAIL AREA
- [21] - POTHOLE I.D. No.

THIS PLAN ACCURATE FOR UTILITY WORK ONLY

GENERAL UTLITIES NOTES:

1. THE EXISTENCE AND LOCATION OF ANY UNDERGROUND UTILITY PIPES OR STRUCTURES SHOWN ON THESE PLANS HAVE BEEN OBTAINED BY A SEARCH OF THE AVAILABLE RECORDS. THE CONTRACTOR IS REQUIRED TO TAKE DUE PRECAUTION, AND ANY MEASURES TO PROTECT THE UTILITIES AND STRUCTURES SHOWN AND ANY OTHER UTILITY(S) OR STRUCTURE(S) NOT OF RECORD OR NOT SHOWN. THE CONTRACTOR IS RESPONSIBLE FOR THE PROTECTION OF, AND REPAIR OF ANY DAMAGE TO ANY UTILITY(S) AND/OR STRUCTURE(S).
2. REFER TO SHEETS U-3, U-5, U-6, U-7, U-9, U-10, AND U-11 FOR UTILITY POTHOLE LOCATION INFORMATION.
3. ALL UTILITY LOCATIONS ARE APPROXIMATE AND ARE BASED UPON AVAILABLE RECORD DRAWINGS.
4. REFER TO LIGHTING AND SIGN ILLUMINATION PLANS FOR STREET LIGHTS.

ABBREVIATIONS:

ABND	ABANDONED
CATV	CABLE TELEVISION
COMM	COMMUNICATIONS
F/O	FIBER OPTIC
HP	HIGH PRESSURE
kV	KILOVOLT
PE	POLYETHYLENE PIPE
PH	POTHOLE
TV	TELEVISION
UG	UNDERGROUND (Exist)

UTILITY OWNERSHIP ON THIS PROJECT:

AT&T	AT&T CALIFORNIA (AT&T/SBC/PACBELL)
CITY OF BREA	CITY OF BREA
CITY OF FULLERTION	CITY OF FULLERTON
COMCAST	COMCAST CABLE
EXXON MOBIL	EXXON MOBIL CORP
LINN ENERGY	LINN ENERGY, LLC
MCI	MCI WORLDCOM COMMUNICATIONS
MWD	METROPOLITAN WATER DISTRICT
OCSD	ORANGE COUNTY SANITATION DISTRICT
OCTA	ORANGE COUNTY TRANSPORTATION AUTHORITY
OLIN PROPERTY	OLIN PROPERTY
PHILLIPS 66	CONOCO PHILLIPS COMPANY
SCE	SOUTHERN CALIFORNIA EDISON
SCG	SOUTHERN CALIFORNIA GAS COMPANY
TIME WARNER	TIME WARNER CABLE
UNOCAL	UNION OIL COMPANY OF CALIFORNIA

UTILITY PLAN

SCALE: 1" = 50'

U-1

REVISED BY | DATE REVISED
QUYEN DANG | ROBERT HENDERSON
CALCULATED-DESIGNED BY | CHECKED BY
CONSULTANT FUNCTIONAL SUPERVISOR: THOMAS IONTA
STATE OF CALIFORNIA - DEPARTMENT OF TRANSPORTATION
Caltrans

LAST REVISION | DATE PLOTTED => 25-JAN-2010
00-00-00 | TIME PLOTTED => 10:09

BORDER LAST REVISED 4/11/2008
RELATIVE BORDER SCALE IS IN INCHES 0 1 2 3
USERNAME => trstrk
DGN FILE => c0F032ka001.dgn
CU 12220
EA 0F0321

Dist	COUNTY	ROUTE	POST MILES TOTAL PROJECT	SHEET No.	TOTAL SHEETS
12	Ora	57	18.4/20.9	150	856

Robert M. Henderson 06/15/09
REGISTERED CIVIL ENGINEER DATE

1-25-10
PLANS APPROVAL DATE

REGISTERED PROFESSIONAL ENGINEER — ROBERT M. HENDERSON — No. C66736 — Exp. 09/30/10 — CIVIL — STATE OF CALIFORNIA

THE STATE OF CALIFORNIA OR ITS OFFICERS OR AGENTS SHALL NOT BE RESPONSIBLE FOR THE ACCURACY OR COMPLETENESS OF SCANNED COPIES OF THIS PLAN SHEET.

CH2M HILL
6 HUTTON CENTRE DRIVE,
SUITE 700
SANTA ANA, CA 92707

OCTA
550 S. MAIN STREET
ORANGE, CA 92863

NOTE:

1. FOR COMPLETE RIGHT OF WAY DATA, SEE RIGHT OF WAY RECORD MAPS AT DISTRICT OFFICE.

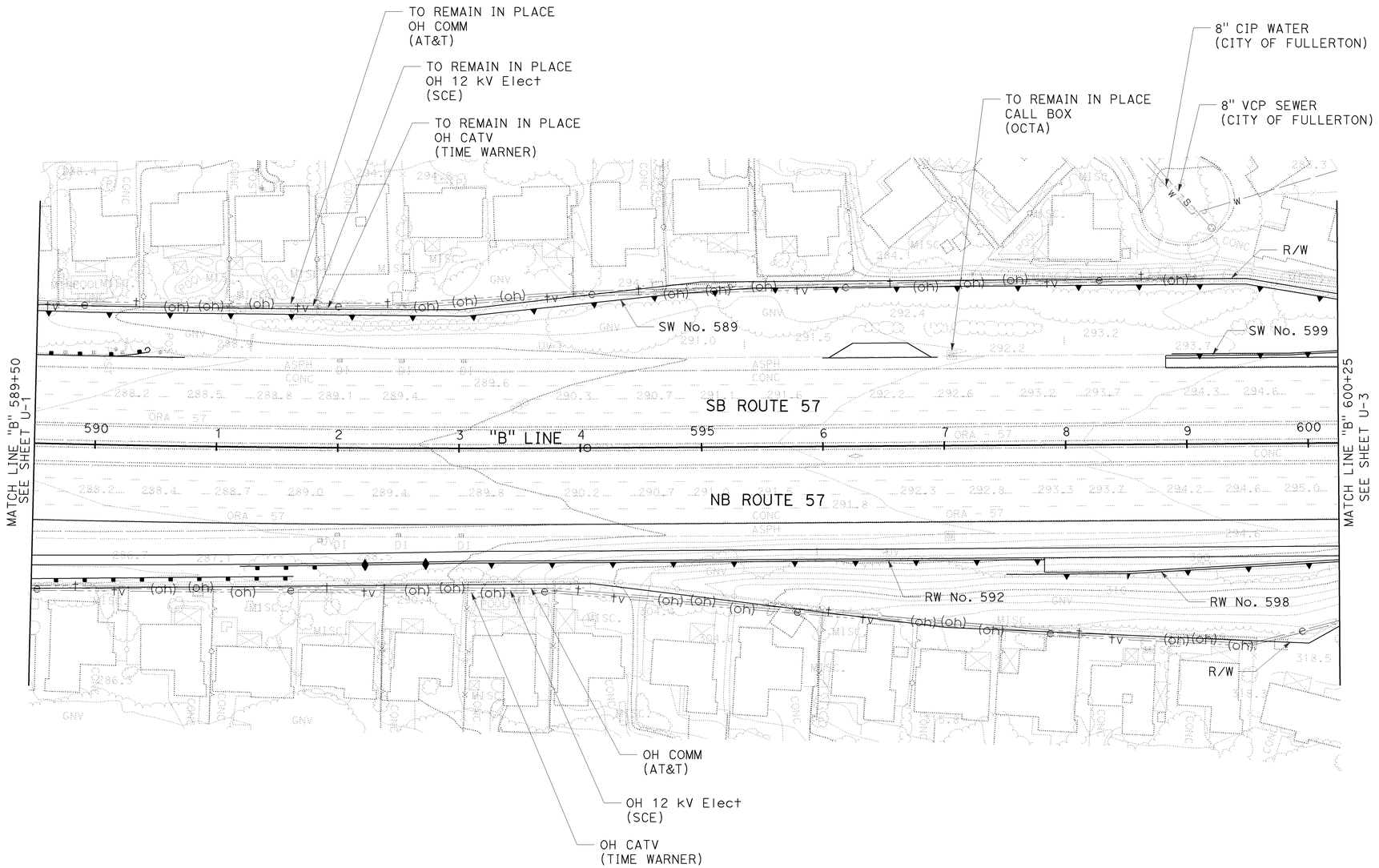

UTILITY PLAN

SCALE: 1" = 50'

U-2

THIS PLAN ACCURATE FOR UTILITY WORK ONLY

STATE OF CALIFORNIA - DEPARTMENT OF TRANSPORTATION
Caltrans

CONSULTANT FUNCTIONAL SUPERVISOR: THOMAS IONTA

CALCULATED-DESIGNED BY: QUYEN DANG
CHECKED BY: ROBERT HENDERSON

REVISED BY | DATE REVISED

LAST REVISION: 00-00-00
DATE PLOTTED => 25-JAN-2010
TIME PLOTTED => 10:09

BORDER LAST REVISED 4/11/2008

RELATIVE BORDER SCALE IS IN INCHES 0 1 2 3

USERNAME => trstrk
DGN FILE => c0F032ka002.dgn

CU 12220

EA 0F0321

Dist	COUNTY	ROUTE	POST MILES TOTAL PROJECT	SHEET No.	TOTAL SHEETS
12	Ora	57	18.4/20.9	151	856

REGISTERED CIVIL ENGINEER — 06/15/09 DATE

1-25-10
PLANS APPROVAL DATE

ROBERT M. HENDERSON No. C66736 Exp. 09/30/10 CIVIL — REGISTERED PROFESSIONAL ENGINEER — STATE OF CALIFORNIA

THE STATE OF CALIFORNIA OR ITS OFFICERS OR AGENTS SHALL NOT BE RESPONSIBLE FOR THE ACCURACY OR COMPLETENESS OF SCANNED COPIES OF THIS PLAN SHEET.

CH2M HILL
6 HUTTON CENTRE DRIVE,
SUITE 700
SANTA ANA, CA 92707

OCTA
550 S. MAIN STREET
ORANGE, CA 92863

NOTE:

1. FOR COMPLETE RIGHT OF WAY DATA, SEE RIGHT OF WAY RECORD MAPS AT DISTRICT OFFICE.

UTILITY POTHOLE INFORMATION TABLE - SR57/BASTANCHURY

POTHOLE NUMBER	UTILITY	NORTHING (ft)	EASTING (ft)	Exist Grnd Elev (ft)	TOP OF Util Elev (ft)	DEPTH (ft)	DESCRIPTION
01	TIME WARNER	2273713.80	6066713.21	269.46	266.32	3.14	18" PVC CATV
02	SCG	2273736.92	6066822.26	271.08	268.18	2.90	4" STEEL GAS
03	TIME WARNER	2273753.36	6066850.03	271.34	269.24	2.10	18" PVC CATV
03	SCG	2273753.67	6066849.93	271.36	268.08	3.28	4" STEEL GAS

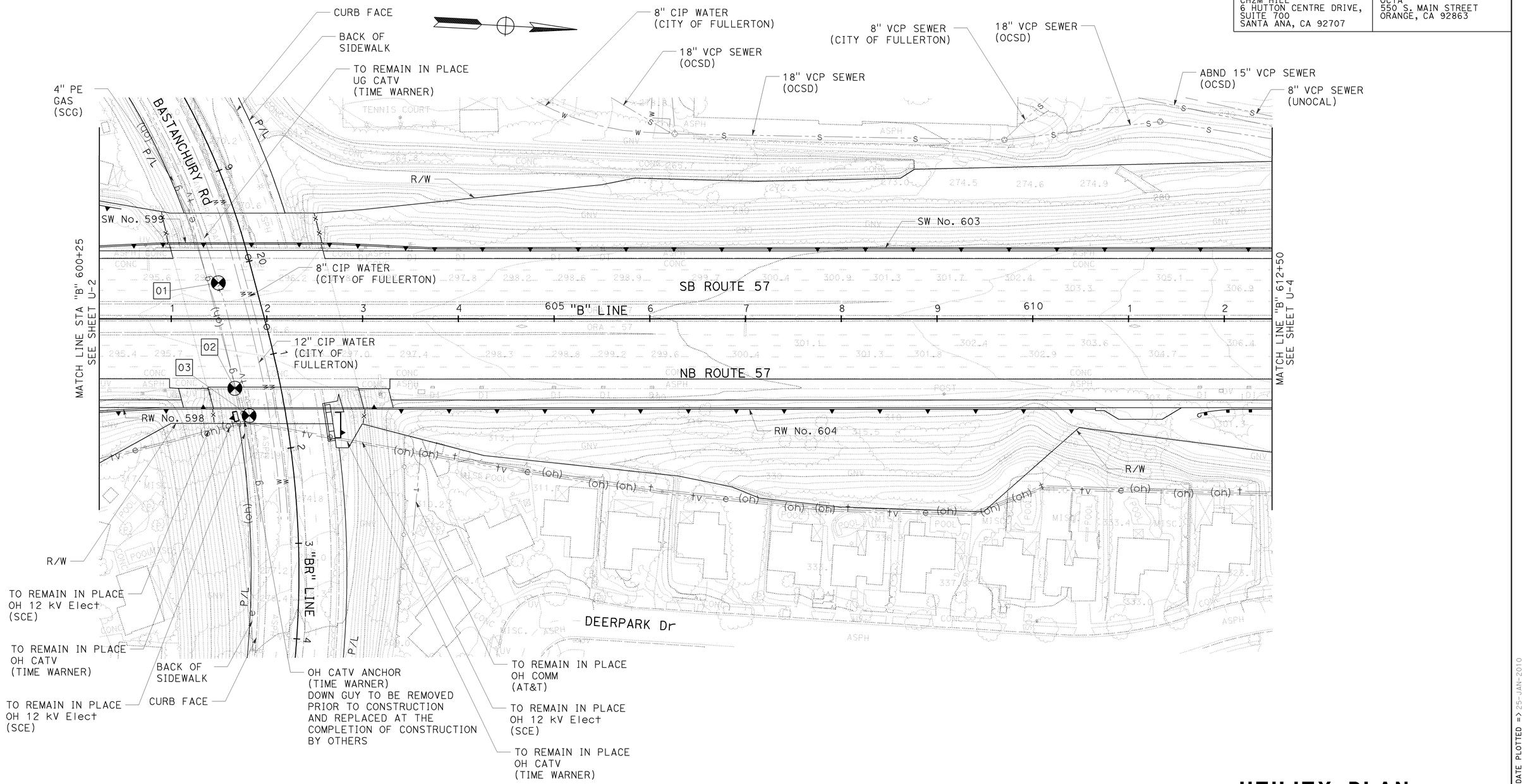

THIS PLAN ACCURATE FOR UTILITY WORK ONLY

UTILITY PLAN

SCALE: 1" = 50'

U-3

REVISED BY | DATE REVISED
QUYEN DANG | ROBERT HENDERSON
CALCULATED-DESIGNED BY | CHECKED BY
CONSULTANT FUNCTIONAL SUPERVISOR: THOMAS IONTA
STATE OF CALIFORNIA - DEPARTMENT OF TRANSPORTATION

LAST REVISION | DATE PLOTTED => 25-JAN-2010
00-00-00 | TIME PLOTTED => 10:10

BORDER LAST REVISED 4/11/2008 | RELATIVE BORDER SCALE IS IN INCHES 0 1 2 3 | USERNAME => trstrk | DGN FILE => c0F032ka003.dgn | CU 12220 | EA 0F0321

Dist	COUNTY	ROUTE	POST MILES TOTAL PROJECT	SHEET No.	TOTAL SHEETS
12	Ora	57	18.4/20.9	152	856

REGISTERED CIVIL ENGINEER — 06/15/09 DATE

ROBERT M. HENDERSON No. C66736 Exp. 09/30/10 CIVIL — REGISTERED PROFESSIONAL ENGINEER — STATE OF CALIFORNIA

1-25-10
PLANS APPROVAL DATE

THE STATE OF CALIFORNIA OR ITS OFFICERS OR AGENTS SHALL NOT BE RESPONSIBLE FOR THE ACCURACY OR COMPLETENESS OF SCANNED COPIES OF THIS PLAN SHEET.

CH2M HILL
6 HUTTON CENTRE DRIVE,
SUITE 700
SANTA ANA, CA 92707

OCTA
550 S. MAIN STREET
ORANGE, CA 92863

NOTE:

1. FOR COMPLETE RIGHT OF WAY DATA,
   SEE RIGHT OF WAY RECORD MAPS AT DISTRICT OFFICE.

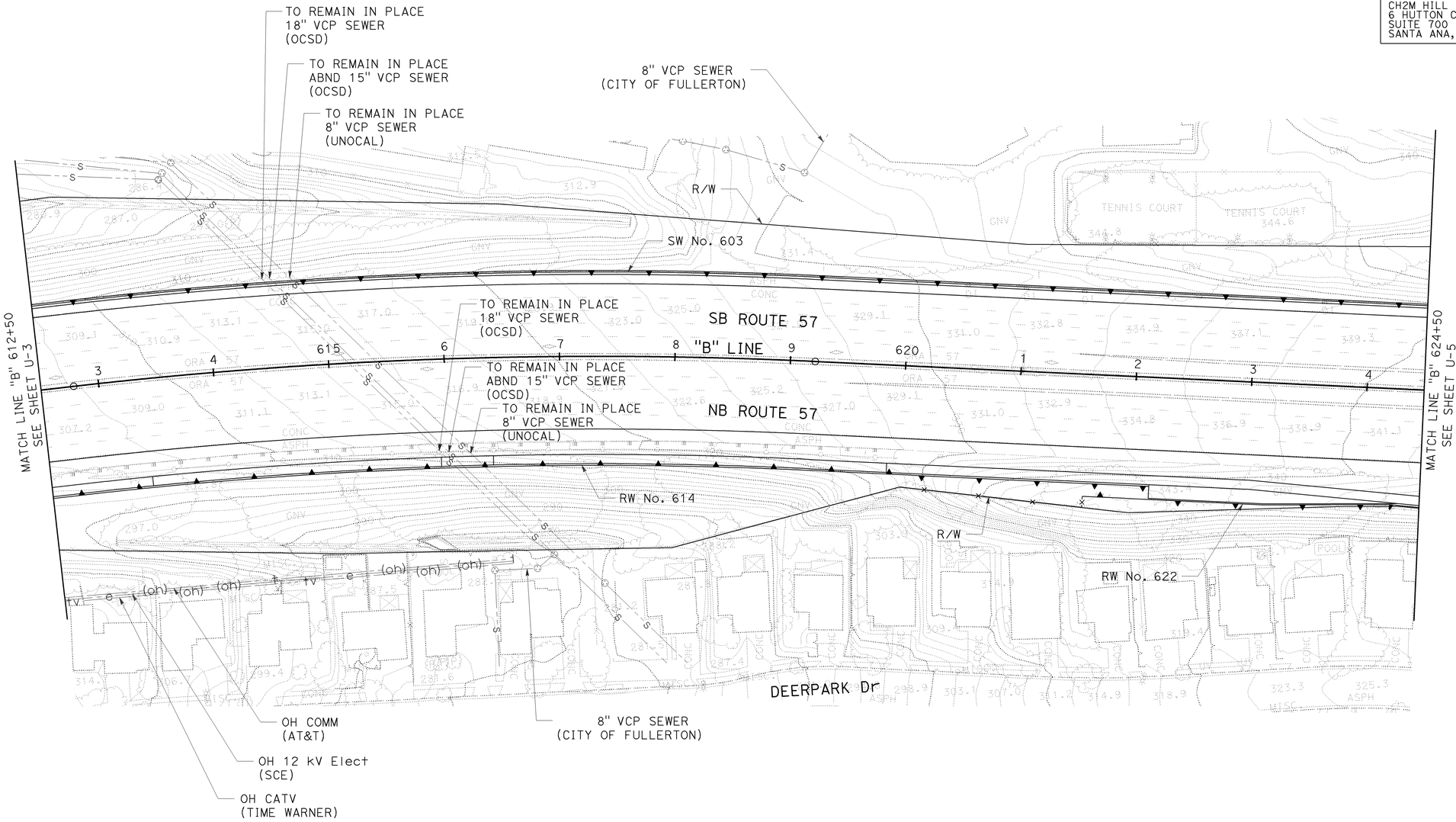

THIS PLAN ACCURATE FOR UTILITY WORK ONLY

UTILITY PLAN

SCALE: 1" = 50'

U-4

REVISED BY | DATE REVISED
QUYEN DANG | ROBERT HENDERSON
CALCULATED-DESIGNED BY | CHECKED BY
CONSULTANT FUNCTIONAL SUPERVISOR: THOMAS IONTA
STATE OF CALIFORNIA - DEPARTMENT OF TRANSPORTATION
Caltrans

LAST REVISION | DATE PLOTTED => 25-JAN-2010
00-00-00 | TIME PLOTTED => 10:10

BORDER LAST REVISED 4/11/2008

RELATIVE BORDER SCALE IS IN INCHES 0 1 2 3

USERNAME => trstrk
DGN FILE => c0F032ka004.dgn

CU 12220

EA 0F0321

Dist	COUNTY	ROUTE	POST MILES TOTAL PROJECT	SHEET No.	TOTAL SHEETS
12	Ora	57	18.4/20.9	153	856

REGISTERED CIVIL ENGINEER — 06/15/09 DATE

1-25-10
PLANS APPROVAL DATE

ROBERT M. HENDERSON No. C66736 Exp. 09/30/10 CIVIL — REGISTERED PROFESSIONAL ENGINEER — STATE OF CALIFORNIA

THE STATE OF CALIFORNIA OR ITS OFFICERS OR AGENTS SHALL NOT BE RESPONSIBLE FOR THE ACCURACY OR COMPLETENESS OF SCANNED COPIES OF THIS PLAN SHEET.

CH2M HILL
6 HUTTON CENTRE DRIVE,
SUITE 700
SANTA ANA, CA 92707

OCTA
550 S. MAIN STREET
ORANGE, CA 92863

NOTES:

1. FOR COMPLETE RIGHT OF WAY DATA, SEE RIGHT OF WAY RECORD MAPS AT DISTRICT OFFICE.
2. DEPTH EXCEEDS 42 INCHES BELOW PLANNED WORK.
3. UTILITY IS LOCATED IN AN EXISTING UTILITY DUCT.

UTILITY POTHOLE INFORMATION TABLE - SR57/ROLLING HILLS Dr

POTHOLE NUMBER	UTILITY	NORTHING (ft)	EASTING (ft)	Exist Grnd Elev (ft)	TOP OF Util Elev (ft)	DEPTH (ft)	DESCRIPTION
05	TIME WARNER	2276248.14	6066884.86	320.97	319.10	1.87	2" DIRECT BURIED F/O TV
06	SCE	2276245.67	6066895.15	321.02	317.05	3.97	TWO 5" PVC ELECTRICAL
07	LINN	2276301.27	6066783.61	320.35	316.19	4.16	8" STEEL GAS
08	SCE	2276309.92	6066847.40	321.07	315.73	5.34	TWO 5" PVC ELECTRICAL
09	LINN	2276301.67	6066860.23	320.52	316.68	3.84	8" STEEL GAS
10	SCE	2276307.64	6066889.09	321.25	317.83	3.42	ENCASEMENT-TWO 5" ELECTRICAL

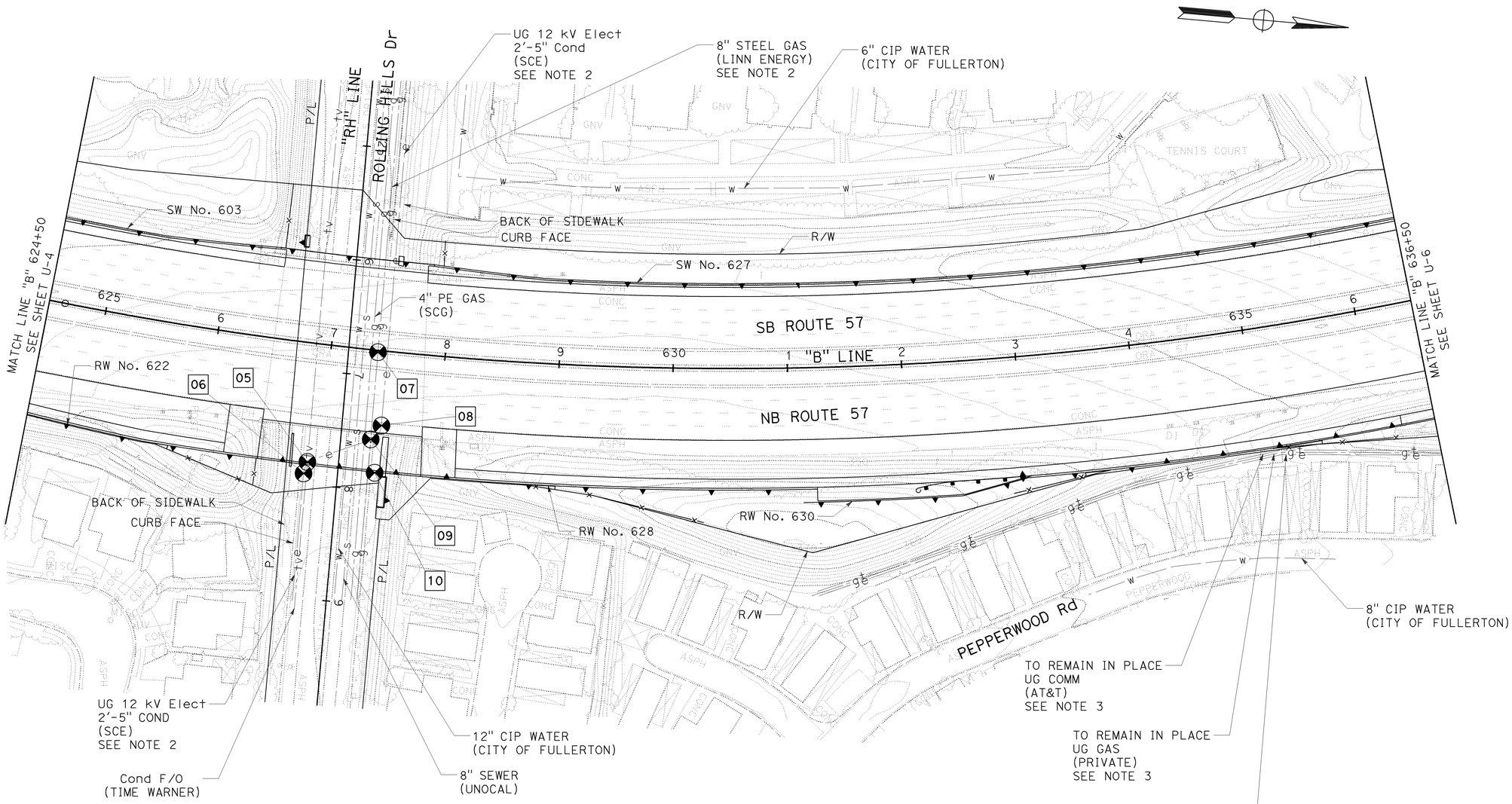

THIS PLAN ACCURATE FOR UTILITY WORK ONLY

UTILITY PLAN

SCALE: 1" = 50'

U-5

REVISED BY	DATE REVISED

CALCULATED-DESIGNED BY: QUYEN DANG
CHECKED BY: ROBERT HENDERSON
CONSULTANT FUNCTIONAL SUPERVISOR: THOMAS IONTA
STATE OF CALIFORNIA - DEPARTMENT OF TRANSPORTATION

LAST REVISION: DATE PLOTTED => 25-JAN-2010 TIME PLOTTED => 10:01
00-00-00

BORDER LAST REVISED 4/11/2008

RELATIVE BORDER SCALE IS IN INCHES 0 1 2 3

USERNAME => trstrk
DGN FILE => c0F032ka005.dgn

CU 12220

EA 0F0321

Dist	COUNTY	ROUTE	POST MILES TOTAL PROJECT	SHEET No.	TOTAL SHEETS
12	Ora	57	18.4/20.9	154	856

REGISTERED CIVIL ENGINEER — 06/15/09 DATE

1-25-10
PLANS APPROVAL DATE

ROBERT M. HENDERSON No. C66736 Exp. 09/30/10 CIVIL — REGISTERED PROFESSIONAL ENGINEER — STATE OF CALIFORNIA

THE STATE OF CALIFORNIA OR ITS OFFICERS OR AGENTS SHALL NOT BE RESPONSIBLE FOR THE ACCURACY OR COMPLETENESS OF SCANNED COPIES OF THIS PLAN SHEET.

CH2M HILL
6 HUTTON CENTRE DRIVE,
SUITE 700
SANTA ANA, CA 92707

OCTA
550 S. MAIN STREET
ORANGE, CA 92863

NOTES:

1. FOR COMPLETE RIGHT OF WAY DATA, SEE RIGHT OF WAY RECORD MAPS AT DISTRICT OFFICE.
2. DEPTH EXCEEDS 42 INCHES BELOW PLANNED WORK.
3. UTILITY IS LOCATED IN AN Exist UTILITY DUCT.

UTILITY POTHOLE INFORMATION TABLE - SR57/ASSOCIATED Rd

POTHOLE NUMBER	UTILITY	NORTHING (ft)	EASTING (ft)	Exist Grnd Elev (ft)	TOP OF Util Elev (ft)	DEPTH (ft)	DESCRIPTION
13	UNKNOWN	2277611.56	6066597.14	297.89	294.71	3.18	2" STEEL PIPE
14	AT&T	2277627.70	6066600.44	297.65	294.03	3.62	FOUR 4" PVC TELEPHONE
15	TIME WARNER	2277637.69	6066623.64	299.06	298.61	0.45	1.50'X4.18' ENCASEMENT-F/O TV
16	AT&T	2277648.59	6066629.43	299.25	294.98	4.27	ENCASEMENT-FOUR 4" TELEPHONE

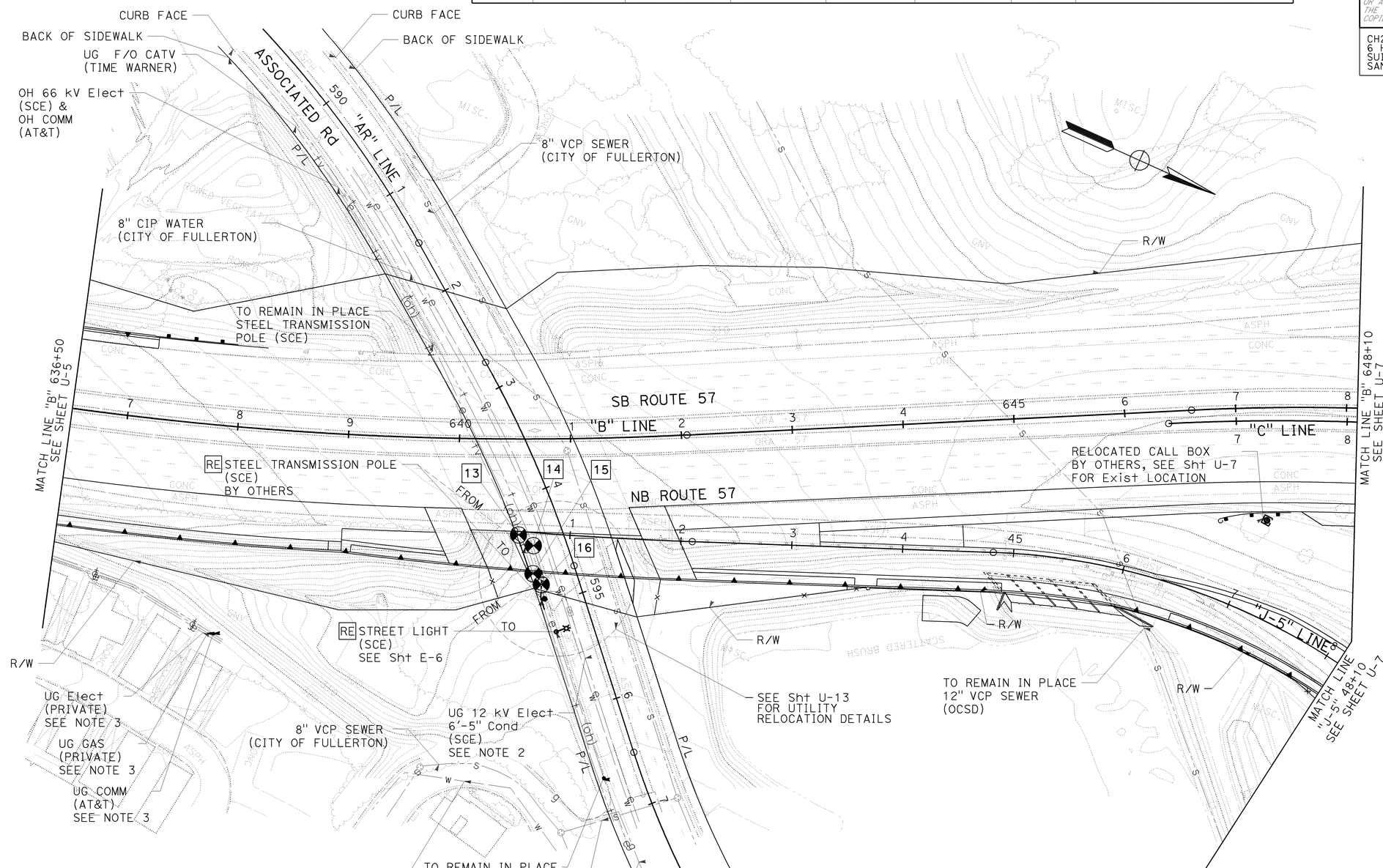

THIS PLAN ACCURATE FOR UTILITY WORK ONLY

UTILITY PLAN

SCALE: 1" = 50'

U-6

STATE OF CALIFORNIA - DEPARTMENT OF TRANSPORTATION
Caltrans
CONSULTANT FUNCTIONAL SUPERVISOR: THOMAS IONTA
CALCULATED-DESIGNED BY: QUYEN DANG
CHECKED BY: ROBERT HENDERSON
REVISED BY
DATE REVISED
LAST REVISION 00-00-00
DATE PLOTTED => 25-JAN-2010
TIME PLOTTED => 10:10

BORDER LAST REVISED 4/11/2008
RELATIVE BORDER SCALE IS IN INCHES 0 1 2 3
USERNAME => trstrk
DGN FILE => c0F032ka006.dgn
CU 12220
EA 0F0321

Dist	COUNTY	ROUTE	POST MILES TOTAL PROJECT	SHEET No.	TOTAL SHEETS
12	Ora	57	18.4/20.9	155	856

REGISTERED CIVIL ENGINEER — 06/15/09 DATE

ROBERT M. HENDERSON No. C66736 Exp. 09/30/10 CIVIL — REGISTERED PROFESSIONAL ENGINEER — STATE OF CALIFORNIA

1-25-10
PLANS APPROVAL DATE

THE STATE OF CALIFORNIA OR ITS OFFICERS OR AGENTS SHALL NOT BE RESPONSIBLE FOR THE ACCURACY OR COMPLETENESS OF SCANNED COPIES OF THIS PLAN SHEET.

CH2M HILL
6 HUTTON CENTRE DRIVE,
SUITE 700
SANTA ANA, CA 92707

OCTA
550 S. MAIN STREET
ORANGE, CA 92863

NOTES:

1. FOR COMPLETE RIGHT OF WAY DATA, SEE RIGHT OF WAY RECORD MAPS AT DISTRICT OFFICE.
2. DEPTH EXCEEDS 42 INCHES BELOW PLANNED WORK.

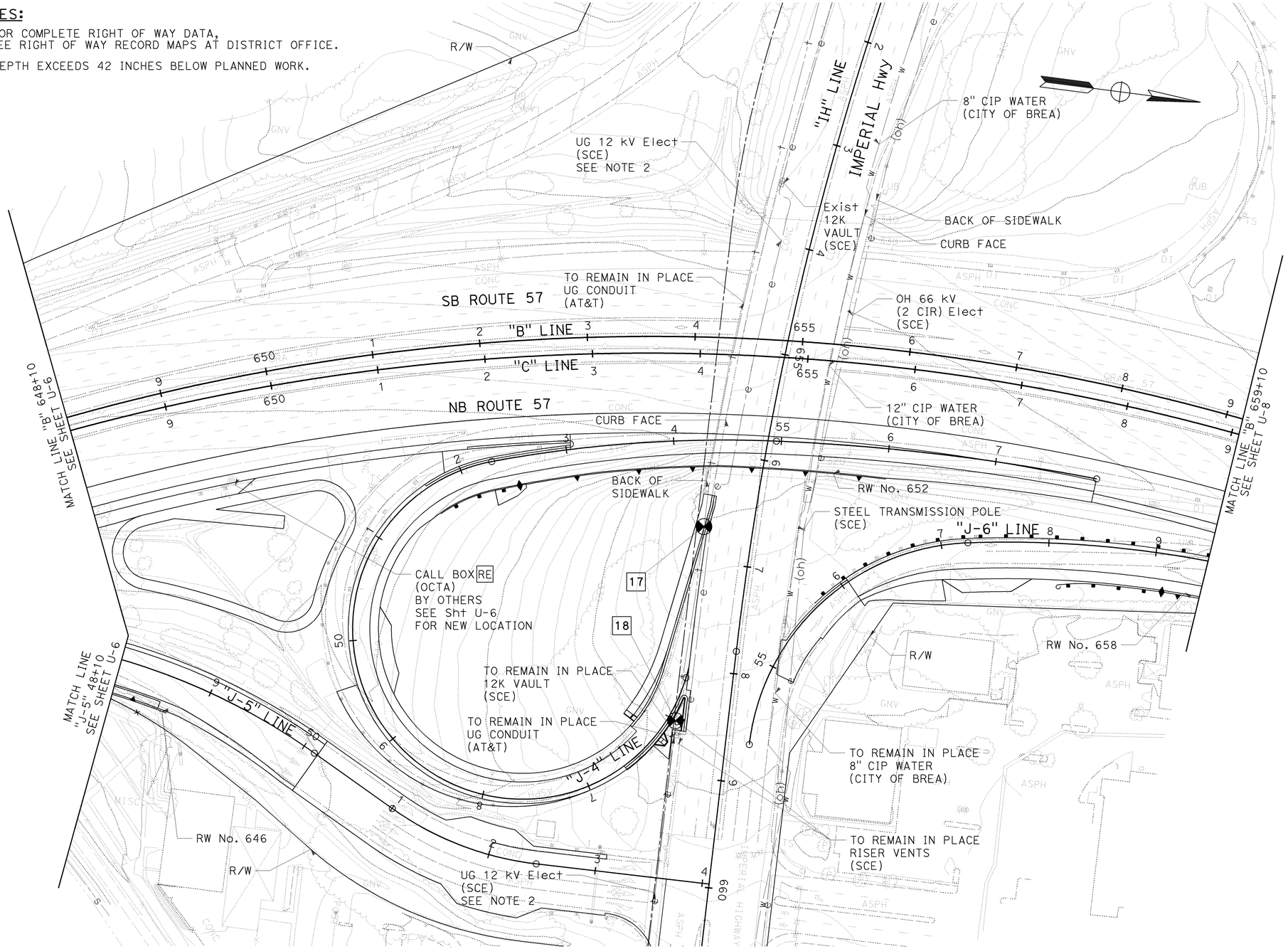

UTILITY POTHOLE INFORMATION TABLE - SR57/IMPERIAL Hwy

POTHOLE NUMBER	UTILITY	NORTHING (ft)	EASTING (ft)	Exist Grnd Elev (ft)	TOP OF Util Elev (ft)	DEPTH (ft)	DESCRIPTION
17	AT&T	2278852.99	6066209.60	339.57	333.47	6.10	ENCASEMENT
18	SCE	2278849.52	6066391.54	332.60	326.82	5.78	ENCASEMENT-ELECTRICAL
18	AT&T	2278848.93	6066391.50	332.50	325.79	6.71	ENCASEMENT-TELEPHONE

THIS PLAN ACCURATE FOR UTILITY WORK ONLY

UTILITY PLAN

SCALE: 1" = 50'

U-7

STATE OF CALIFORNIA - DEPARTMENT OF TRANSPORTATION — Caltrans

CONSULTANT FUNCTIONAL SUPERVISOR: THOMAS IONTA

CALCULATED-DESIGNED BY: ROBERT HENDERSON

CHECKED BY: QUYEN DANG

REVISED BY | DATE REVISED

LAST REVISION | DATE PLOTTED => 25-JAN-2010
00-00-00 | TIME PLOTTED => 10:10

BORDER LAST REVISED 4/11/2008

RELATIVE BORDER SCALE IS IN INCHES 0 1 2 3

USERNAME => trstrk
DGN FILE => c0F032ka007.dgn

CU 12220

EA 0F0321

Dist	COUNTY	ROUTE	POST MILES TOTAL PROJECT	SHEET No.	TOTAL SHEETS
12	Ora	57	18.4/20.9	156	856

REGISTERED CIVIL ENGINEER — 06/15/09 DATE

ROBERT M. HENDERSON No. C66736 Exp. 09/30/10 CIVIL — REGISTERED PROFESSIONAL ENGINEER — STATE OF CALIFORNIA

1-25-10
PLANS APPROVAL DATE

THE STATE OF CALIFORNIA OR ITS OFFICERS OR AGENTS SHALL NOT BE RESPONSIBLE FOR THE ACCURACY OR COMPLETENESS OF SCANNED COPIES OF THIS PLAN SHEET.

CH2M HILL
6 HUTTON CENTRE DRIVE,
SUITE 700
SANTA ANA, CA 92707

OCTA
550 S. MAIN STREET
ORANGE, CA 92863

NOTE:

1. FOR COMPLETE RIGHT OF WAY DATA, SEE RIGHT OF WAY RECORD MAPS AT DISTRICT OFFICE.

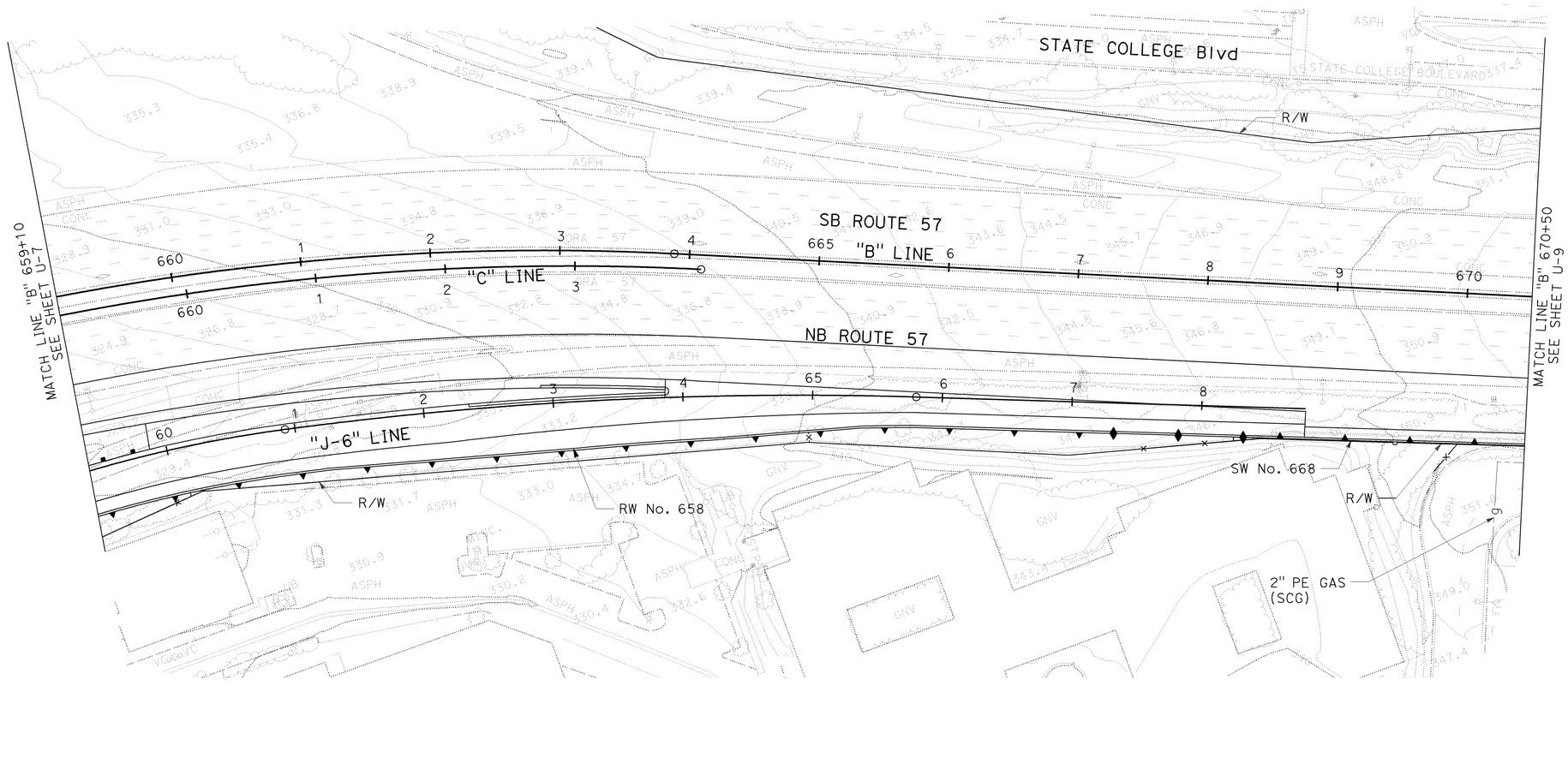

THIS PLAN ACCURATE FOR UTILITY WORK ONLY

UTILITY PLAN

SCALE: 1" = 50'

U-8

STATE OF CALIFORNIA - DEPARTMENT OF TRANSPORTATION
Caltrans

CONSULTANT FUNCTIONAL SUPERVISOR: THOMAS IONTA
CALCULATED-DESIGNED BY: QUYEN DANG
CHECKED BY: ROBERT HENDERSON
REVISED BY
DATE REVISED

LAST REVISION DATE PLOTTED => 25-JAN-2010
00-00-00 TIME PLOTTED => 10:10

BORDER LAST REVISED 4/11/2008

RELATIVE BORDER SCALE IS IN INCHES 0 1 2 3

USERNAME => trstrk
DGN FILE => c0F032ka008.dgn

CU 12220

EA 0F0321

Dist	COUNTY	ROUTE	POST MILES TOTAL PROJECT	SHEET No.	TOTAL SHEETS
12	Ora	57	18.4/20.9	157	856

Robert M. Henderson 06/15/09
REGISTERED CIVIL ENGINEER DATE

1-25-10
PLANS APPROVAL DATE

REGISTERED PROFESSIONAL ENGINEER
ROBERT M. HENDERSON
No. C66736
Exp. 09/30/10
CIVIL
STATE OF CALIFORNIA

THE STATE OF CALIFORNIA OR ITS OFFICERS OR AGENTS SHALL NOT BE RESPONSIBLE FOR THE ACCURACY OR COMPLETENESS OF SCANNED COPIES OF THIS PLAN SHEET.

CH2M HILL
6 HUTTON CENTRE DRIVE,
SUITE 700
SANTA ANA, CA 92707

OCTA
550 S. MAIN STREET
ORANGE, CA 92863

NOTES:

1. FOR COMPLETE RIGHT OF WAY DATA, SEE RIGHT OF WAY RECORD MAPS AT DISTRICT OFFICE.
2. DEPTH EXCEEDS 42 INCHES BELOW PLANNED WORK.
3. UTILITY IS LOCATED IN AN Exist UTILITY DUCT.

UTILITY POTHOLE INFORMATION TABLE - SR57/AURORA Ave							
POTHOLE NUMBER	UTILITY	NORTHING (ft)	EASTING (ft)	Exist Grnd Elev (ft)	TOP OF Util Elev (ft)	DEPTH (ft)	DESCRIPTION
20	SCG	2280838.88	6066743.08	353.41	349.73	3.68	2" PE GAS
21	SCG	2280906.52	6066770.30	353.59	350.76	2.83	2" PE GAS

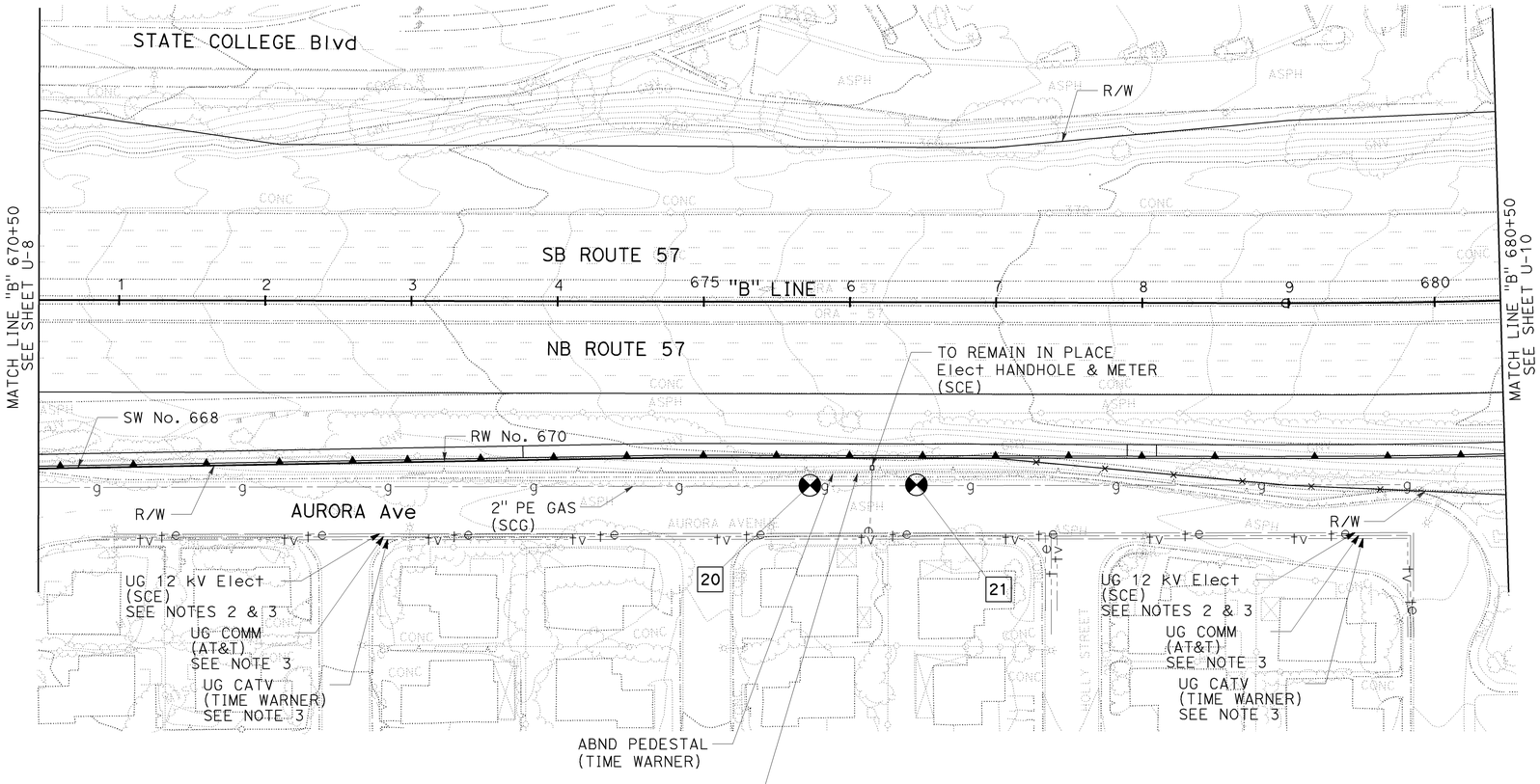

THIS PLAN ACCURATE FOR UTILITY WORK ONLY

UTILITY PLAN

SCALE: 1" = 50'

U-9

STATE OF CALIFORNIA - DEPARTMENT OF TRANSPORTATION
CONSULTANT FUNCTIONAL SUPERVISOR: THOMAS IONTA
CALCULATED-DESIGNED BY: QUYEN DANG
CHECKED BY: ROBERT HENDERSON
REVISED BY | DATE REVISED

LAST REVISION | DATE PLOTTED => 25-JAN-2010
00-00-00 | TIME PLOTTED => 10:10

BORDER LAST REVISED 4/11/2008

RELATIVE BORDER SCALE IS IN INCHES 0 1 2 3

USERNAME => trstrk
DGN FILE => c0F032ka009.dgn

CU 12220

EA 0F0321

Dist	COUNTY	ROUTE	POST MILES TOTAL PROJECT	SHEET No.	TOTAL SHEETS
12	Ora	57	18.4/20.9	158	856

REGISTERED CIVIL ENGINEER — DATE: 06/15/09

ROBERT M. HENDERSON No. C66736 Exp. 09/30/10 CIVIL — REGISTERED PROFESSIONAL ENGINEER — STATE OF CALIFORNIA

1-25-10
PLANS APPROVAL DATE

THE STATE OF CALIFORNIA OR ITS OFFICERS OR AGENTS SHALL NOT BE RESPONSIBLE FOR THE ACCURACY OR COMPLETENESS OF SCANNED COPIES OF THIS PLAN SHEET.

CH2M HILL
6 HUTTON CENTRE DRIVE,
SUITE 700
SANTA ANA, CA 92707

OCTA
550 S. MAIN STREET
ORANGE, CA 92863

NOTES:

1. FOR COMPLETE RIGHT OF WAY DATA, SEE RIGHT OF WAY RECORD MAPS AT DISTRICT OFFICE.
2. DEPTH EXCEEDS 42 INCHES BELOW PLANNED WORK.

UTILITY POTHOLE INFORMATION TABLE - SR57/BIRCH St

POTHOLE NUMBER	UTILITY	NORTHING (ft)	EASTING (ft)	Exist Grnd Elev (ft)	TOP OF Util Elev (ft)	DEPTH (ft)	DESCRIPTION
22	SCE	2281482.07	6066905.88	357.64	353.46	4.18	2'x2' ENCASEMENT-ELECTRICAL
22	AT&T	2281481.33	6066905.95	357.61	356.15	1.46	1'x2' ENCASEMENT-TELEPHONE
24	SCE	2281482.34	6066949.90	357.40	353.72	3.68	ENCASEMENT-ELECTRICAL
24	AT&T	2281482.04	6066950.05	357.39	353.93	3.46	TWO 4" PVC TELEPHONE
24	TIME WARNER	2281481.41	6066950.17	357.39	353.29	4.10	TWO 4" Conc TELECOM Cond

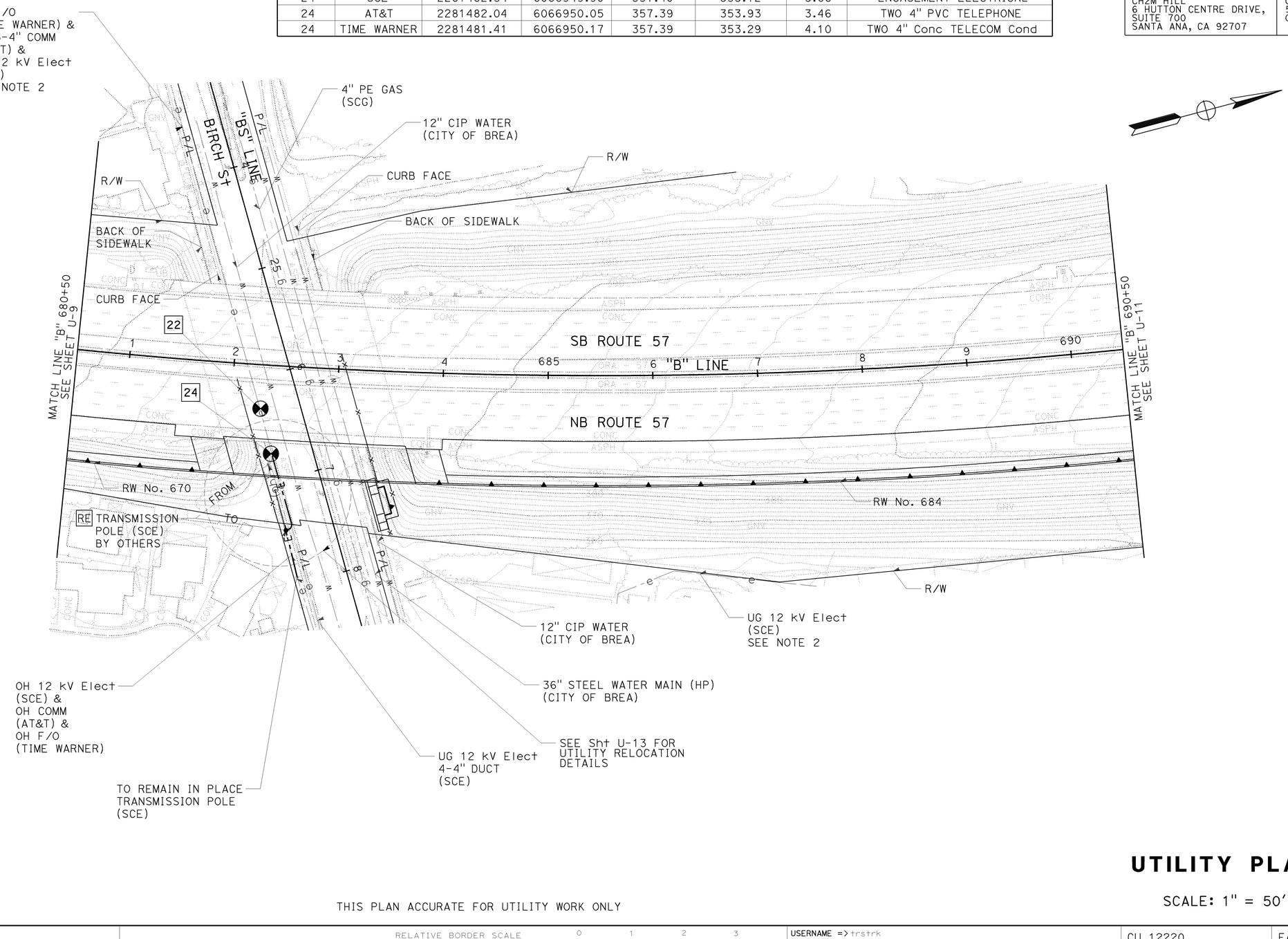

THIS PLAN ACCURATE FOR UTILITY WORK ONLY

UTILITY PLAN

SCALE: 1" = 50'

U-10

STATE OF CALIFORNIA - DEPARTMENT OF TRANSPORTATION
Caltrans

CONSULTANT FUNCTIONAL SUPERVISOR: THOMAS IONTA
CALCULATED-DESIGNED BY: QUYEN DANG
CHECKED BY: ROBERT HENDERSON
REVISED BY / DATE REVISED

LAST REVISION | DATE PLOTTED => 25-JAN-2010 | 00-00-00 | TIME PLOTTED => 10:10

BORDER LAST REVISED 4/11/2008

RELATIVE BORDER SCALE IS IN INCHES 0 1 2 3

USERNAME => trstrk
DGN FILE => c0F032ka010.dgn

CU 12220

EA 0F0321

Dist	COUNTY	ROUTE	POST MILES TOTAL PROJECT	SHEET No.	TOTAL SHEETS
12	Ora	57	18.4/20.9	159	856

Robert M. Henderson 06/15/09
REGISTERED CIVIL ENGINEER DATE

ROBERT M. HENDERSON No. C66736 Exp. 09/30/10 CIVIL — REGISTERED PROFESSIONAL ENGINEER — STATE OF CALIFORNIA

1-25-10
PLANS APPROVAL DATE

THE STATE OF CALIFORNIA OR ITS OFFICERS OR AGENTS SHALL NOT BE RESPONSIBLE FOR THE ACCURACY OR COMPLETENESS OF SCANNED COPIES OF THIS PLAN SHEET.

CH2M HILL
6 HUTTON CENTRE DRIVE,
SUITE 700
SANTA ANA, CA 92707

OCTA
550 S. MAIN STREET
ORANGE, CA 92863

NOTES:

1. FOR COMPLETE RIGHT OF WAY DATA, SEE RIGHT OF WAY RECORD MAPS AT DISTRICT OFFICE.
2. DEPTH EXCEEDS 42 INCHES BELOW PLANNED WORK.

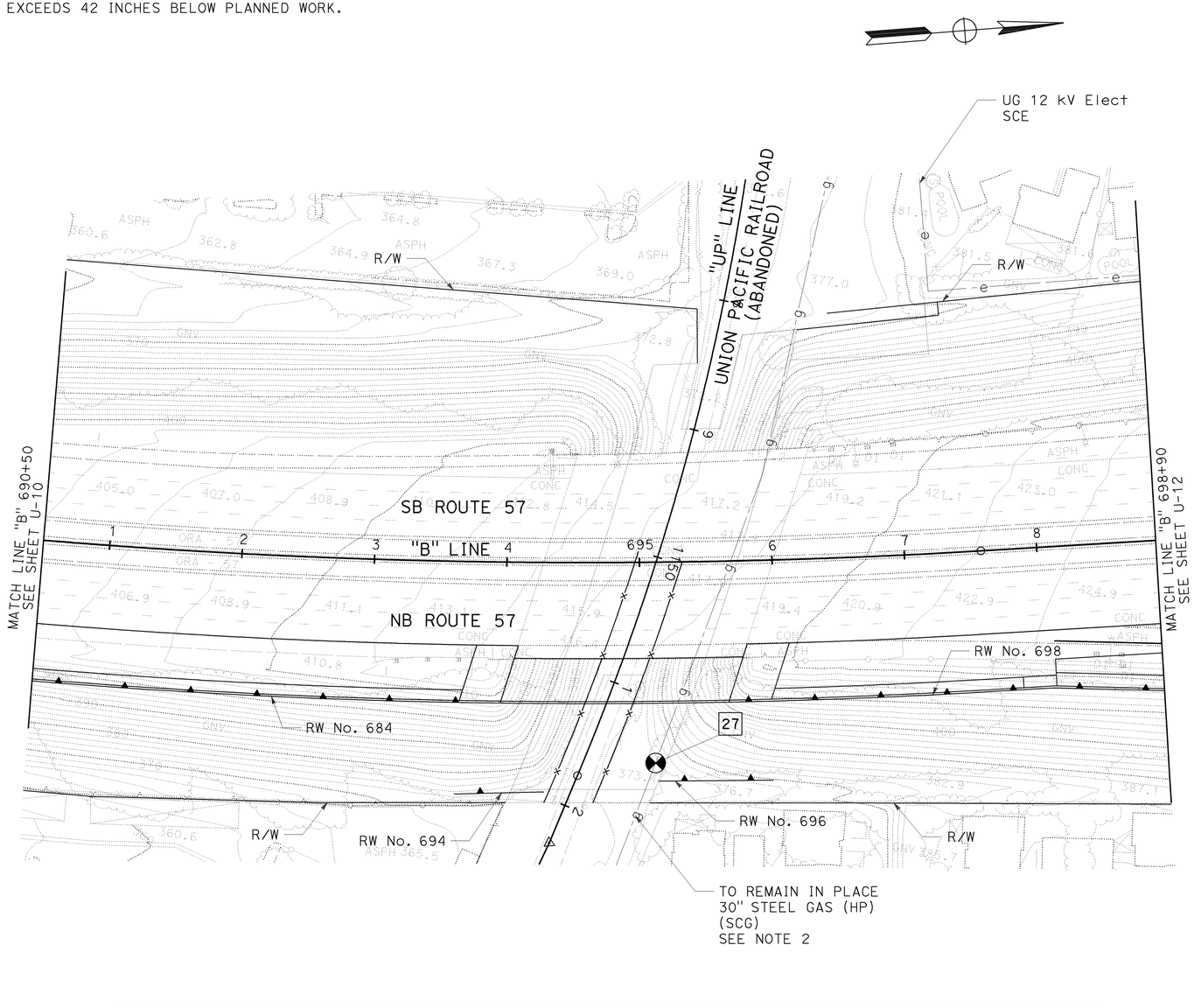

UTILITY POTHOLE INFORMATION TABLE - SR57/UNION PACIFIC RAILROAD

POTHOLE NUMBER	UTILITY	NORTHING (ft)	EASTING (ft)	Exist Grnd Elev (ft)	TOP OF Util Elev (ft)	DEPTH (ft)	DESCRIPTION
27	SCG	2282740.67	6067267.06	373.45	369.59	3.86	30" STEEL GAS

THIS PLAN ACCURATE FOR UTILITY WORK ONLY

UTILITY PLAN

SCALE: 1" = 50'

U-11

REVISED BY	DATE REVISED

CALCULATED-DESIGNED BY: QUYEN DANG
CHECKED BY: ROBERT HENDERSON
CONSULTANT FUNCTIONAL SUPERVISOR: THOMAS IONTA
STATE OF CALIFORNIA - DEPARTMENT OF TRANSPORTATION
Caltrans

LAST REVISION DATE PLOTTED => 25-JAN-2010
TIME PLOTTED => 10:10
00-00-00

Dist	COUNTY	ROUTE	POST MILES TOTAL PROJECT	SHEET No.	TOTAL SHEETS
12	Ora	57	18.4/20.9	160	856

Robert M. Henderson 06/15/09
REGISTERED CIVIL ENGINEER DATE

1-25-10
PLANS APPROVAL DATE

REGISTERED PROFESSIONAL ENGINEER
ROBERT M. HENDERSON
No. C66736
Exp. 09/30/10
CIVIL
STATE OF CALIFORNIA

THE STATE OF CALIFORNIA OR ITS OFFICERS OR AGENTS SHALL NOT BE RESPONSIBLE FOR THE ACCURACY OR COMPLETENESS OF SCANNED COPIES OF THIS PLAN SHEET.

CH2M HILL
6 HUTTON CENTRE DRIVE,
SUITE 700
SANTA ANA, CA 92707

OCTA
550 S. MAIN STREET
ORANGE, CA 92863

NOTE:

1. FOR COMPLETE RIGHT OF WAY DATA, SEE RIGHT OF WAY RECORD MAPS AT DISTRICT OFFICE.

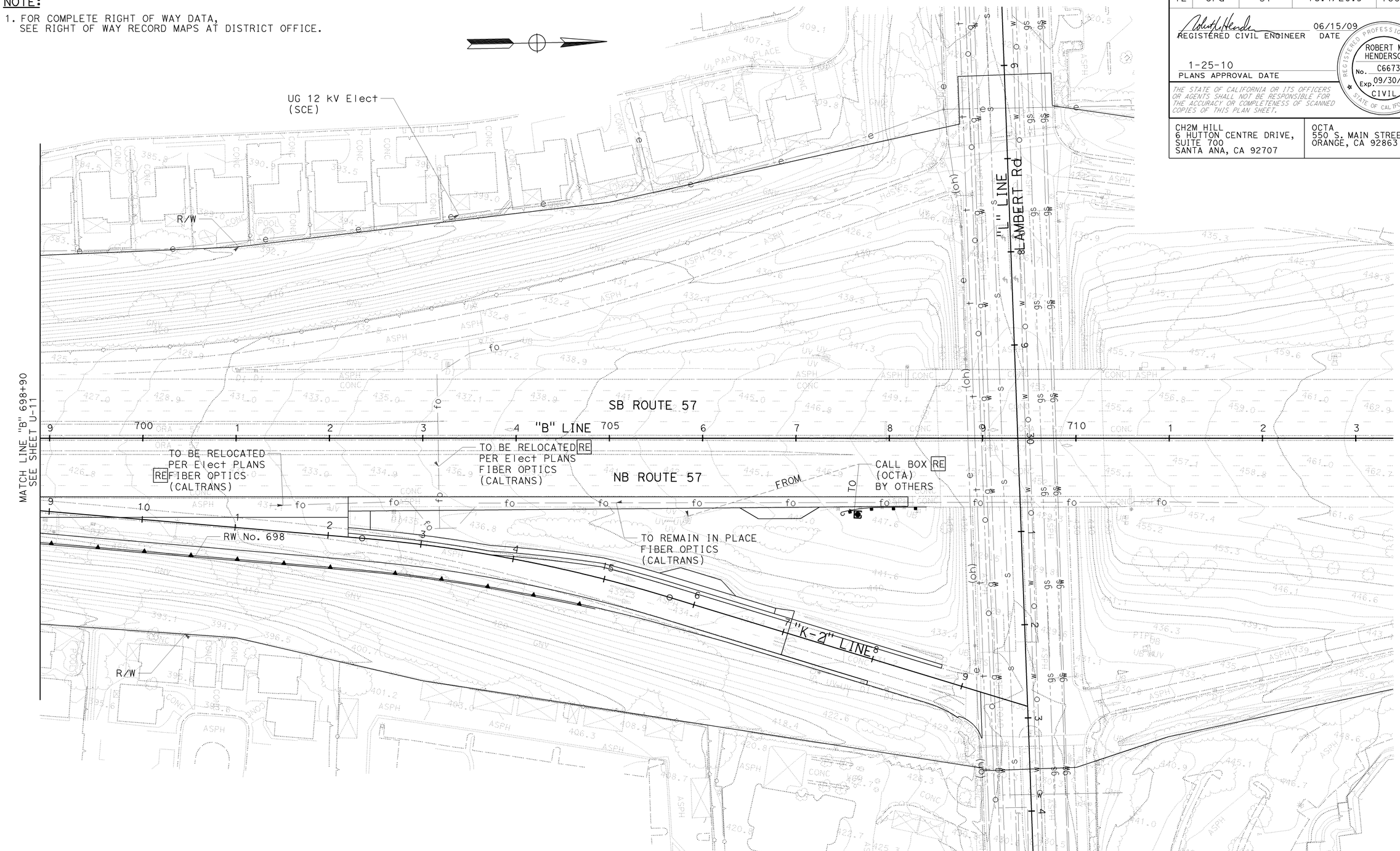

UTILITY PLAN

SCALE: 1" = 50'

U-12

THIS PLAN ACCURATE FOR UTILITY WORK ONLY

CALCULATED-DESIGNED BY: QUYEN DANG
CHECKED BY: ROBERT HENDERSON
CONSULTANT FUNCTIONAL SUPERVISOR: THOMAS IONTA
STATE OF CALIFORNIA - DEPARTMENT OF TRANSPORTATION
Caltrans

REVISED BY | DATE REVISED

LAST REVISION | DATE PLOTTED => 25-JAN-2010
TIME PLOTTED => 10:11
00-00-00

BORDER LAST REVISED 4/11/2008

RELATIVE BORDER SCALE IS IN INCHES 0 1 2 3

USERNAME => trstrk
DGN FILE => c0F032ka012.dgn

CU 12220

EA 0F0321

Dist	COUNTY	ROUTE	POST MILES TOTAL PROJECT	SHEET No.	TOTAL SHEETS
12	Ora	57	18.4/20.9	161	856

REGISTERED CIVIL ENGINEER — 06/15/09 DATE

ROBERT M. HENDERSON No. C66736 Exp. 09/30/10 CIVIL — REGISTERED PROFESSIONAL ENGINEER — STATE OF CALIFORNIA

1-25-10
PLANS APPROVAL DATE

THE STATE OF CALIFORNIA OR ITS OFFICERS OR AGENTS SHALL NOT BE RESPONSIBLE FOR THE ACCURACY OR COMPLETENESS OF SCANNED COPIES OF THIS PLAN SHEET.

CH2M HILL
6 HUTTON CENTRE DRIVE,
SUITE 700
SANTA ANA, CA 92707

OCTA
550 S. MAIN STREET
ORANGE, CA 92863

NOTES:

1. FOR COMPLETE RIGHT OF WAY DATA, SEE RIGHT OF WAY RECORD MAPS AT DISTRICT OFFICE.
2. DEPTH EXCEEDS 42 INCHES BELOW PLANNED WORK.

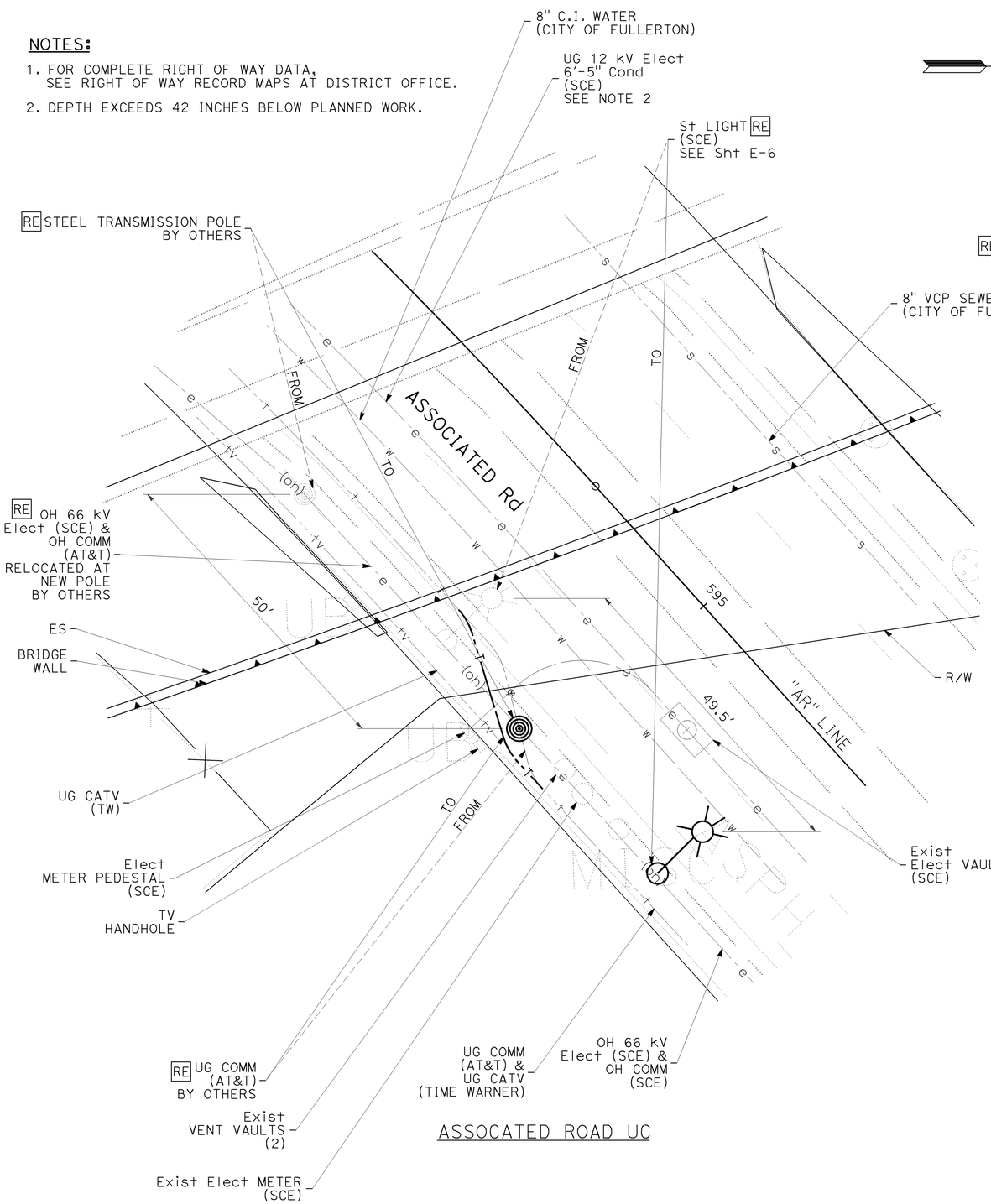

ASSOCATED ROAD UC

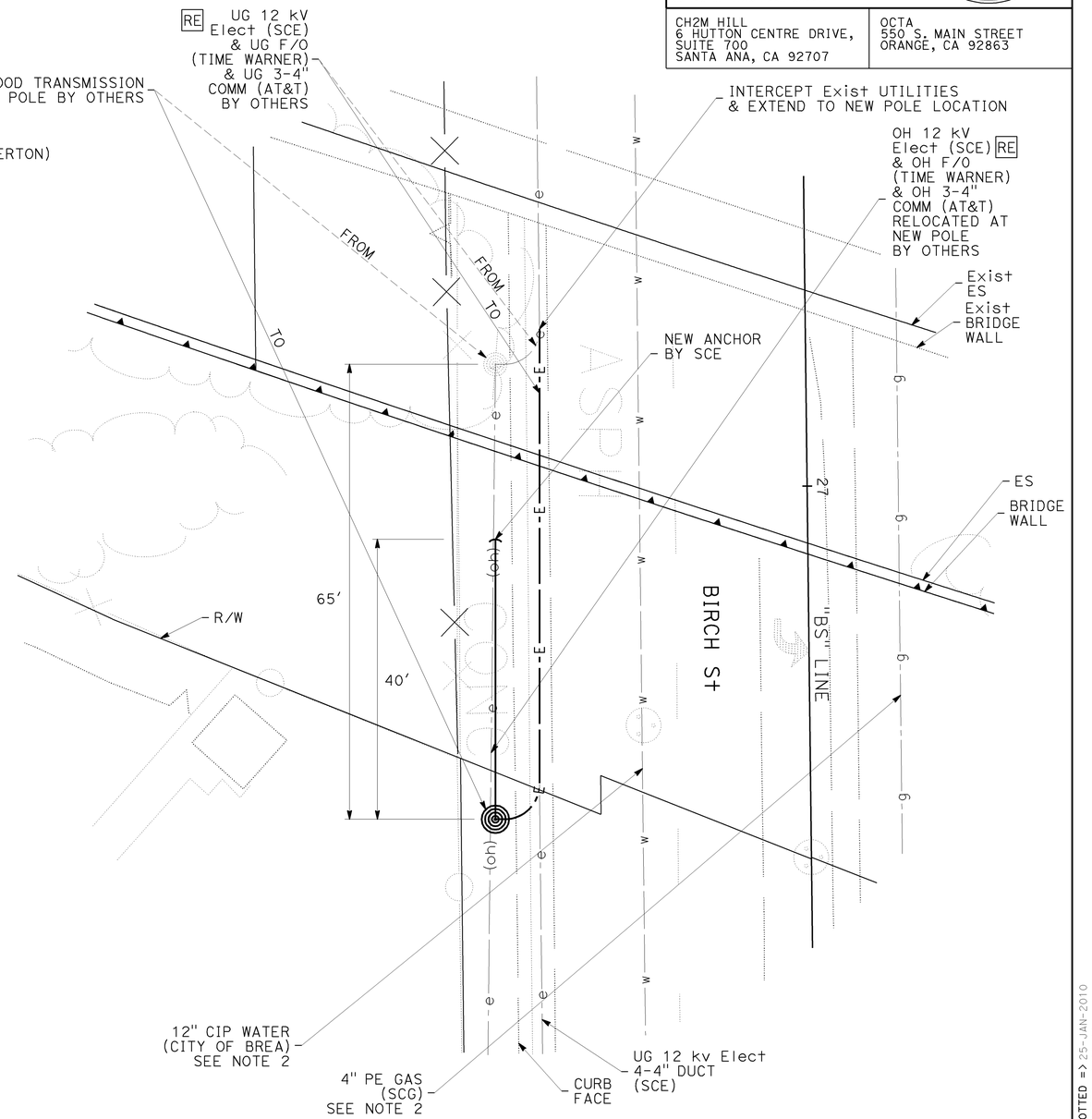

BIRCH St UC

UTILITY PLAN

SCALE: 1" = 10'

U-13

THIS PLAN ACCURATE FOR UTILITY WORK ONLY

STATE OF CALIFORNIA - DEPARTMENT OF TRANSPORTATION
CONSULTANT FUNCTIONAL SUPERVISOR: THOMAS IONTA
CALCULATED-DESIGNED BY: QUYEN DANG
CHECKED BY: ROBERT HENDERSON
REVISED BY / DATE REVISED

LAST REVISION: DATE PLOTTED => 25-JAN-2010 TIME PLOTTED => 10:11
00-00-00

BORDER LAST REVISED 4/11/2008

RELATIVE BORDER SCALE IS IN INCHES 0 1 2 3

USERNAME => trstrk
DGN FILE => c0F032ka013.dgn

CU 12220

EA 0F0321

Dist	COUNTY	ROUTE	POST MILES TOTAL PROJECT	SHEET No.	TOTAL SHEETS
12	Ora	57	18.4/20.9	162	856

REGISTERED CIVIL ENGINEER — 11-16-09 DATE

1-25-10
PLANS APPROVAL DATE

REGISTERED PROFESSIONAL ENGINEER — THOMAS M. IONTA — No. C45818 — Exp. 12-31-10 — CIVIL — STATE OF CALIFORNIA

THE STATE OF CALIFORNIA OR ITS OFFICERS OR AGENTS SHALL NOT BE RESPONSIBLE FOR THE ACCURACY OR COMPLETENESS OF SCANNED COPIES OF THIS PLAN SHEET.

CH2M HILL
6 HUTTON CENTRE DRIVE,
SUITE 700
SANTA ANA, CA 92707

OCTA
550 S. MAIN STREET
ORANGE, CA 92863

CONSTRUCTION NOTES:

1. CONSTRUCT SW No. 581, SW No. 589 AND RW No. 587.
2. CONSTRUCT PORTION OF NB ROUTE 57 WIDENING TO ROLLING HILLS Dr UC, CONSTRUCT RW No. 592 AND RW No. 598.
3. CONSTRUCT SB BASTANCHURY Rd UC BRIDGE WIDENING AND SW No. 599.
4. CONSTRUCT NB BASTANCHURY Rd UC BRIDGE WIDENING.
5. CONSTRUCT RW No. 604, AND RW No. 614.
6. CONSTRUCT SW No. 618.
   CONSTRUCT RW No. 620 & RW No. 622.
7. CONSTRUCT SW No. 603 ALONG SB ROUTE 57.

TRAFFIC HANDLING NOTES:

1. RESTRIPE EXISTING NB & SB ROUTE 57. SHIFT NB & SB ROUTE 57 TRAFFIC TOWARDS THE MEDIAN IN TEMPORARY LANES AS SHOWN ON THE PLANS.
2. RESTRIPE EXISTING BASTANCHURY Rd.
   SHIFT TRAFFIC INTO TEMPORARY LANES AS SHOWN ON THE PLANS.
   RESTRIPE WITH PERMANENT PAVEMENT DELINIATION FROM "BR" 16+00 TO "BR" 25+35 PRIOR TO START OF STAGE 2.
3. RESTRIPE SB OFF RAMP TO YORBA LINDA Blvd.
   SHIFT TRAFFIC INTO TEMPORARY LANES AS SHOWN ON THE PLANS.
   RESTRIPE WITH PERMANENT PAVEMENT DELINIATION FROM "I-7" 79+76 TO "I-7" 85+18 PRIOR TO START OF STAGE 2.
4. RESTRIPE SB ROUTE 57 WITH PERMANENT PAVEMENT DELINIATION FROM "B" 581+40 TO "B" 644+85 PRIOR TO START OF STAGE 2.

COMMUNICATION SYSTEM (FIBER OPTIC) NOTES:

1. COMMUNICATION SYSTEM TO REMAIN OPERATIONAL THROUGHOUT CONSTRUCTION.
2. SEE ELECTRICAL PLANS FOR Temp COMMUNICATION SYSTEM.

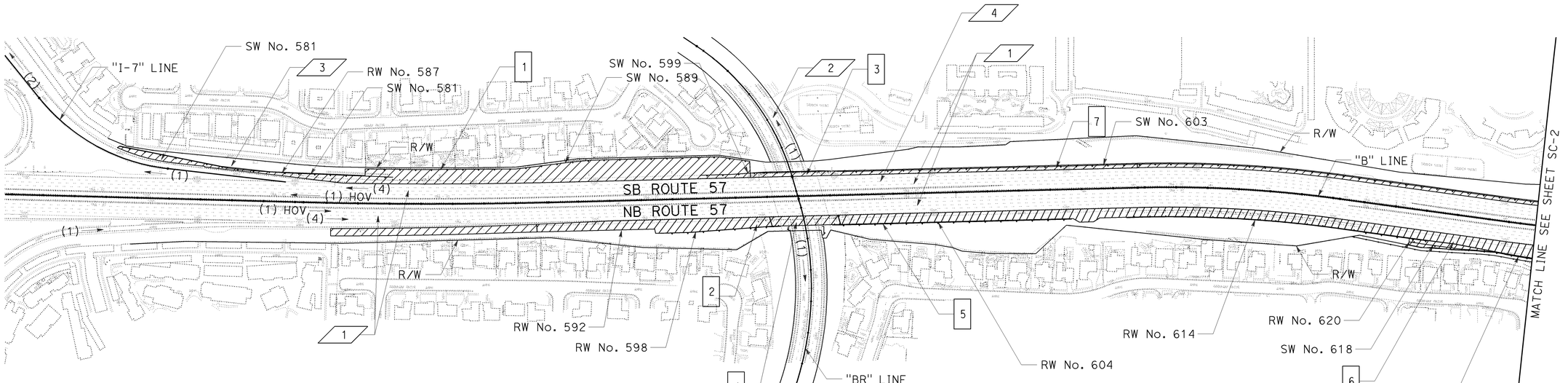

LEGEND:

- X — CONSTRUCTION FEATURE
- X — TRAFFIC HANDLING NOTE
- (X) → — TRAFFIC THIS STAGE AND NUMBER OF LANES IN USE
- CONSTRUCTION THIS STAGE
- ROADWAY COMPLETED IN PREVIOUS STAGE

STAGE CONSTRUCTION INDEX
STAGE 1
NO SCALE

SC-1

THIS PLAN ACCURATE FOR STAGE CONSTRUCTION AND TRAFFIC HANDLING WORK ONLY

REVISED BY: RYAN MITRY
DATE REVISED:
CALCULATED-DESIGNED BY: MIKE ROBINSON
CHECKED BY:
CONSULTANT FUNCTIONAL SUPERVISOR: THOMAS IONTA
STATE OF CALIFORNIA - DEPARTMENT OF TRANSPORTATION
Caltrans

LAST REVISION | DATE PLOTTED => 25-JAN-2010
00-00-00 | TIME PLOTTED => 10:11

BORDER LAST REVISED 4/11/2008 | RELATIVE BORDER SCALE IS IN INCHES 0 1 2 3 | USERNAME => trstrk | DGN FILE => c0F032ma001.dgn | CU 12220 | EA 0F0321

Dist	COUNTY	ROUTE	POST MILES TOTAL PROJECT	SHEET No.	TOTAL SHEETS
12	Ora	57	18.4/20.9	163	856

REGISTERED CIVIL ENGINEER — 06/15/09 DATE

1-25-10
PLANS APPROVAL DATE

REGISTERED PROFESSIONAL ENGINEER — THOMAS M. IONTA — No. C45818 — Exp. 12-31-10 — CIVIL — STATE OF CALIFORNIA

THE STATE OF CALIFORNIA OR ITS OFFICERS OR AGENTS SHALL NOT BE RESPONSIBLE FOR THE ACCURACY OR COMPLETENESS OF SCANNED COPIES OF THIS PLAN SHEET.

CH2M HILL
6 HUTTON CENTRE DRIVE,
SUITE 700
SANTA ANA, CA 92707

OCTA
550 S. MAIN STREET
ORANGE, CA 92863

CONSTRUCTION NOTES:

6 CONSTRUCT SW No. 618, RW No. 620 AND RW No. 622.

7 CONSTRUCT SW No. 603 TO ROLLING HILLS Dr UC.

8 CONSTRUCT SB ROLLING HILLS Dr UC BRIDGE ABUTMENTS ONLY.

9 CONSTRUCT NB ROLLING HILLS Dr UC BRIDGE ABUTMENTS ONLY.

10 CONSTRUCT PORTION OF NB ROUTE 57 WIDENING FROM ROLLING HILLS Dr UC TO ASSOCIATED Rd UC. CONSTRUCT RW No. 628, RW No. 630, RW No. 632 AND RW No. 634.

11 CONSTRUCT PORTION OF SW No. 627 ALONG SB ROUTE 57.

12 CONSTRUCT NB ASSOCIATED Rd UC BRIDGE ABUTMENTS ONLY.

13 CONSTRUCT PORTION OF NB ROUTE 57 WIDENING BETWEEN NB OFF-RAMP TO IMPERIAL Hwy AND NB LOOP ON-RAMP FROM IMPERIAL Hwy. CONSTRUCT INFIELD AREA FEATURES AS SHOWN ON PLANS.

TRAFFIC HANDLING NOTES:

14 CONSTRUCT CULVERT, RW No. 642, RW No. 644 AND RW No. 646.

15 CONSTRUCT PORTION OF NB ROUTE 57 WIDENING ALONG NB LOOP ON-RAMP FROM IMPERIAL Hwy. CONSTRUCT RW No. 652.

16 CONSTRUCT PORTION OF NB ROUTE 57 WIDENING ALONG NB ON-RAMP FROM IMPERIAL Hwy TO BIRCH St UC. CONSTRUCT RW No. 658 AND RW No. 670. REGRADE SLOPE AS SHOWN ON THE GRADING PLANS.

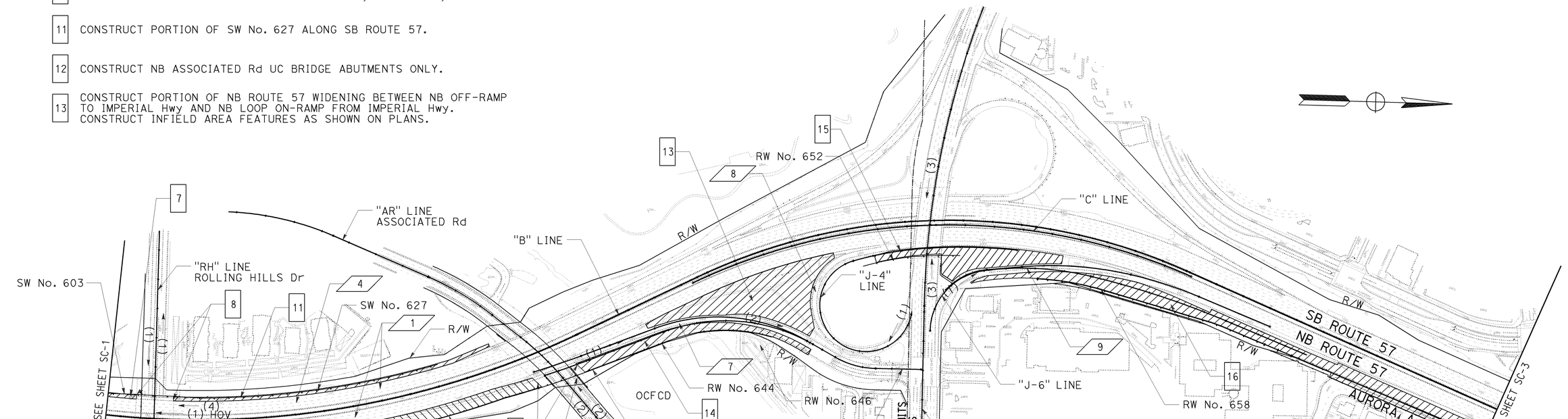

TRAFFIC HANDLING NOTES:

1 RESTRIPE EXISTING NB & SB ROUTE 57. SHIFT NB & SB ROUTE 57 TRAFFIC TOWARDS THE MEDIAN IN TEMPORARY LANES AS SHOWN ON THE PLANS.

4 RESTRIPE SB ROUTE 57 WITH PERMANENT PAVEMENT DELINIATION FROM "B" 581+40 TO "B" 644+85 PRIOR TO START OF STAGE 2.

5 MAINTAIN AT LEAST ONE SIDEWALK FOR PEDESTRIAN TRAFFIC AT ALL TIMES. SIDEWALKS SHALL BE OPEN TO PEDESTRIAN TRAFFIC AT THE END OF EACH WORKING DAY.

6 MAINTAIN AT LEAST ONE SIDEWALK FOR PEDESTRIAN TRAFFIC AT ALL TIMES. SIDEWALKS ON BOTH SIDES OF THE STREET SHALL BE OPEN TO PEDESTRIAN TRAFFIC AT THE END OF EACH WORKING DAY.

7 RESTRIPE NB OFF-RAMP TO IMPERIAL Hwy. SHIFT TRAFFIC INTO TEMPORARY LANE CONFIGURATION AS SHOWN ON PLANS.

8 MAINTAIN TRAFFIC ON NB LOOP ON-RAMP FROM IMPERIAL Hwy .

9 MAINTAIN ONE LANE OF TRAFFIC ON NB ON-RAMP FROM IMPERIAL Hwy .

10 RESTRIPE AURORA Ave AS SHOWN ON THE PLANS.

STAGE CONSTRUCTION INDEX
STAGE 1
NO SCALE

THIS PLAN ACCURATE FOR STAGE CONSTRUCTION AND TRAFFIC HANDLING WORK ONLY

SC-2

REVISED BY	DATE REVISED

CALCULATED-DESIGNED BY: RYAN MITRY
CHECKED BY: MIKE ROBINSON
CONSULTANT FUNCTIONAL SUPERVISOR: THOMAS IONTA
STATE OF CALIFORNIA - DEPARTMENT OF TRANSPORTATION
Caltrans

LAST REVISION 00-00-00 | DATE PLOTTED => 25-JAN-2010 | TIME PLOTTED => 10:11

BORDER LAST REVISED 4/11/2008 | RELATIVE BORDER SCALE IS IN INCHES 0 1 2 3 | USERNAME => trstrk | DGN FILE => c0F032ma002.dgn | CU 12220 | EA 0F0321

Dist	COUNTY	ROUTE	POST MILES TOTAL PROJECT	SHEET No.	TOTAL SHEETS
12	Ora	57	18.4/20.9	164	856

REGISTERED CIVIL ENGINEER — DATE: 06/15/09

REGISTERED PROFESSIONAL ENGINEER — THOMAS M. IONTA — No. C45818 — Exp. 12-31-10 — CIVIL — STATE OF CALIFORNIA

1-25-10
PLANS APPROVAL DATE

THE STATE OF CALIFORNIA OR ITS OFFICERS OR AGENTS SHALL NOT BE RESPONSIBLE FOR THE ACCURACY OR COMPLETENESS OF SCANNED COPIES OF THIS PLAN SHEET.

CH2M HILL
6 HUTTON CENTRE DRIVE,
SUITE 700
SANTA ANA, CA 92707

OCTA
550 S. MAIN STREET
ORANGE, CA 92863

CONSTRUCTION NOTES:

16 CONSTRUCT PORTION OF NB ROUTE 57 WIDENING ALONG NB ON-RAMP FROM IMPERIAL Hwy TO BIRCH St UC. CONSTRUCT RW No. 658 AND RW No. 670. REGRADE SLOPE AS SHOWN ON THE GRADING PLANS.

17 CONSTRUCT NB BIRCH St UC BRIDGE ABUTMENTS ONLY.

18 CONSTRUCT PORTION OF NB ROUTE 57 WIDENING FROM BIRCH St UC TO BREA OH. CONSTRUCT RW No. 684.

19 CONSTRUCT BREA OH WIDENING, RW No. 694 & RW No. 696.

20 CONSTRUCT PORTION OF NB ROUTE 57 WIDENING NORTH OF THE BREA OH. CONSTRUCT RW No. 698 & RW No. 702.

21 CONSTRUCT PORTION OF NB ROUTE 57 WIDENING FROM LAMBERT Rd NB OFF-RAMP TO LAMBERT Rd OC.

TRAFFIC HANDLING NOTES:

1 RESTRIPE EXISTING NB ROUTE 57. SHIFT NB ROUTE 57 TRAFFIC TOWARDS THE MEDIAN IN TEMPORARY LANES AS SHOWN ON THE PLANS.

10 RESTRIPE AURORA Ave AS SHOWN ON THE PLANS.

11 MAINTAIN AT LEAST ONE DIRECTION OF SIDEWALK FOR PEDESTRIAN TRAFFIC AT ALL TIMES. BOTH DIRECTIONS OF SIDEWALK SHALL BE OPEN TO PEDESTRIAN TRAFFIC AT THE END OF EACH WORKING DAY.

12 RESTRIPE NB OFF-RAMP TO LAMBERT Rd. SHIFT TRAFFIC INTO TEMPORARY LANE CONFIGURATION AS SHOWN ON PLANS.

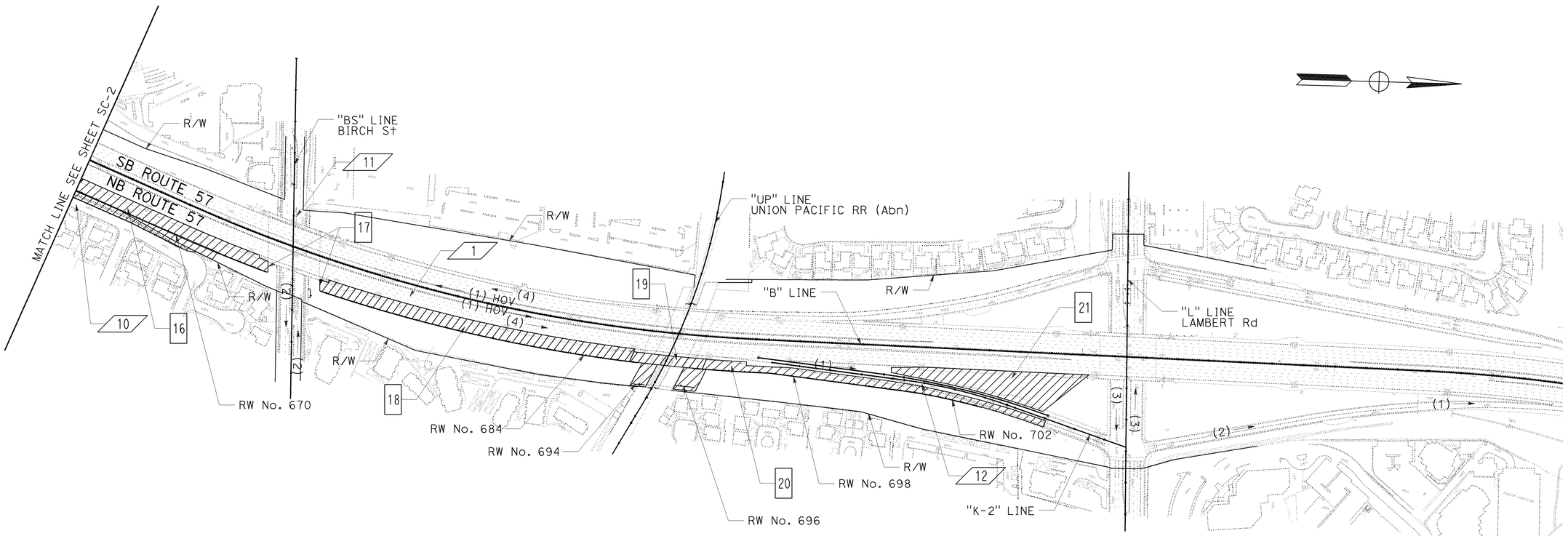

THIS PLAN ACCURATE FOR STAGE CONSTRUCTION AND TRAFFIC HANDLING WORK ONLY

STAGE CONSTRUCTION INDEX
STAGE 1
NO SCALE

SC-3

STATE OF CALIFORNIA - DEPARTMENT OF TRANSPORTATION — Caltrans
CONSULTANT FUNCTIONAL SUPERVISOR: THOMAS IONTA
CALCULATED-DESIGNED BY: RYAN MITRY
CHECKED BY: MIKE ROBINSON
REVISED BY
DATE REVISED

LAST REVISION DATE PLOTTED => 25-JAN-2010
00-00-00 TIME PLOTTED => 10:11

BORDER LAST REVISED 4/11/2008 | RELATIVE BORDER SCALE IS IN INCHES 0 1 2 3 | USERNAME => trstrk | DGN FILE => c0F032ma003.dgn | CU 12220 | EA 0F0321

Dist	COUNTY	ROUTE	POST MILES TOTAL PROJECT	SHEET No.	TOTAL SHEETS
12	Ora	57	18.4/20.9	165	856

REGISTERED CIVIL ENGINEER — 11-16-09 DATE

1-25-10
PLANS APPROVAL DATE

REGISTERED PROFESSIONAL ENGINEER
THOMAS M. IONTA
No. C45818
Exp. 12-31-10
CIVIL
STATE OF CALIFORNIA

THE STATE OF CALIFORNIA OR ITS OFFICERS OR AGENTS SHALL NOT BE RESPONSIBLE FOR THE ACCURACY OR COMPLETENESS OF SCANNED COPIES OF THIS PLAN SHEET.

CH2M HILL
6 HUTTON CENTRE DRIVE,
SUITE 700
SANTA ANA, CA 92707

OCTA
550 S. MAIN STREET
ORANGE, CA 92863

CONSTRUCTION NOTE:

1 CONSTRUCT REMAINING PORTION OF NB ON-RAMP FROM YORBA LINDA Blvd. COORDINATE WITH ADJOINING PROJECT (EA0F0314).

TRAFFIC HANDLING NOTE:

1 SHIFT TRAFFIC ONTO NEW PAVEMENT COMPLETED IN STAGE 1. COORDINATE WITH SOUTH SEGMENT CONTRACT No. 12-0F0314. TEMPORARY PAVEMENT DELINEATION TO REMAIN IN THE NEXT PHASE.

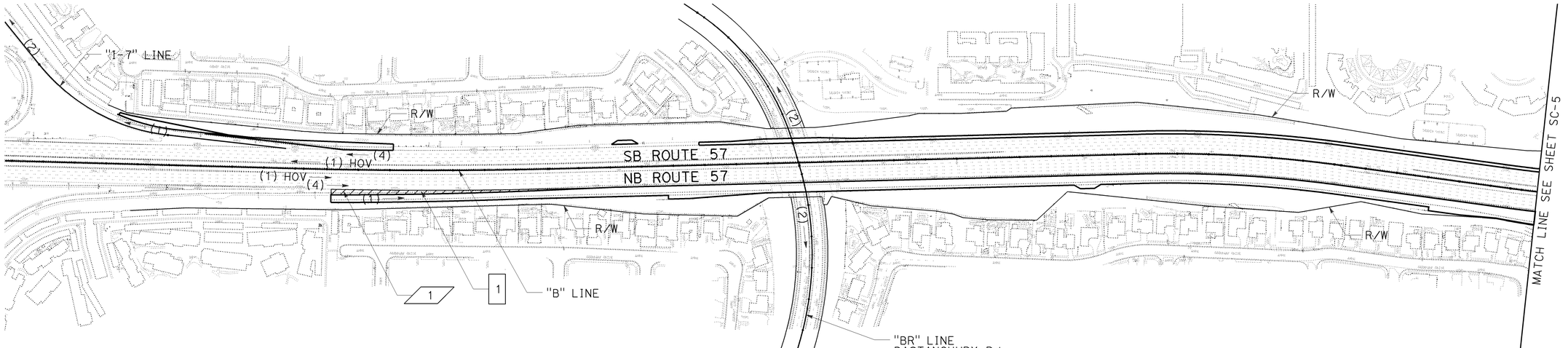

STAGE CONSTRUCTION INDEX
STAGE 2
NO SCALE

SC-4

THIS PLAN ACCURATE FOR STAGE CONSTRUCTION AND TRAFFIC HANDLING WORK ONLY

STATE OF CALIFORNIA - DEPARTMENT OF TRANSPORTATION
Caltrans
CONSULTANT FUNCTIONAL SUPERVISOR: THOMAS IONTA
CALCULATED-DESIGNED BY: RYAN MITRY
CHECKED BY: MIKE ROBINSON
REVISED BY
DATE REVISED

LAST REVISION DATE PLOTTED => 25-JAN-2010
00-00-00 TIME PLOTTED => 10:11

BORDER LAST REVISED 4/11/2008
RELATIVE BORDER SCALE IS IN INCHES 0 1 2 3
USERNAME => trstrk
DGN FILE => c0F032ma004.dgn
CU 12220
EA 0F0321

Dist	COUNTY	ROUTE	POST MILES TOTAL PROJECT	SHEET No.	TOTAL SHEETS
12	Ora	57	18.4/20.9	166	856

REGISTERED CIVIL ENGINEER — 06/15/09 DATE

1-25-10
PLANS APPROVAL DATE

REGISTERED PROFESSIONAL ENGINEER
THOMAS M. IONTA
No. C45818
Exp. 12-31-10
CIVIL
STATE OF CALIFORNIA

THE STATE OF CALIFORNIA OR ITS OFFICERS OR AGENTS SHALL NOT BE RESPONSIBLE FOR THE ACCURACY OR COMPLETENESS OF SCANNED COPIES OF THIS PLAN SHEET.

CH2M HILL
6 HUTTON CENTRE DRIVE,
SUITE 700
SANTA ANA, CA 92707

OCTA
550 S. MAIN STREET
ORANGE, CA 92863

CONSTRUCTION NOTE:

2 STAGE 2, PHASE 1: CONSTRUCT NB & SB ROLLING HILLS Dr UC BRIDGE WIDENING.

TRAFFIC HANDLING NOTES:

2 CLOSE ROLLING HILLS Dr TO VEHICULAR TRAFFIC. MAINTAIN PEDESTRIAN ACCESS.

3 MAINTAIN TRAFFIC ON NB OFF-RAMP TO IMPERIAL IN Temp LANE CONFIGURATION AS SHOWN IN STAGE 1.

4 MAINTAIN TRAFFIC ON NB LOOP ON RAMP.

5 MAINTAIN TRAFFIC ON NB ON-RAMP FROM IMPERIAL AS SHOWN IN STAGE 1.

6 OPEN ROLLING HILLS Dr TO PERMANENT PAVEMENT DELINEATION AFTER COMPLETION OF NB & SB ROLLING HILLS Dr UC BRIDGE WIDENING.

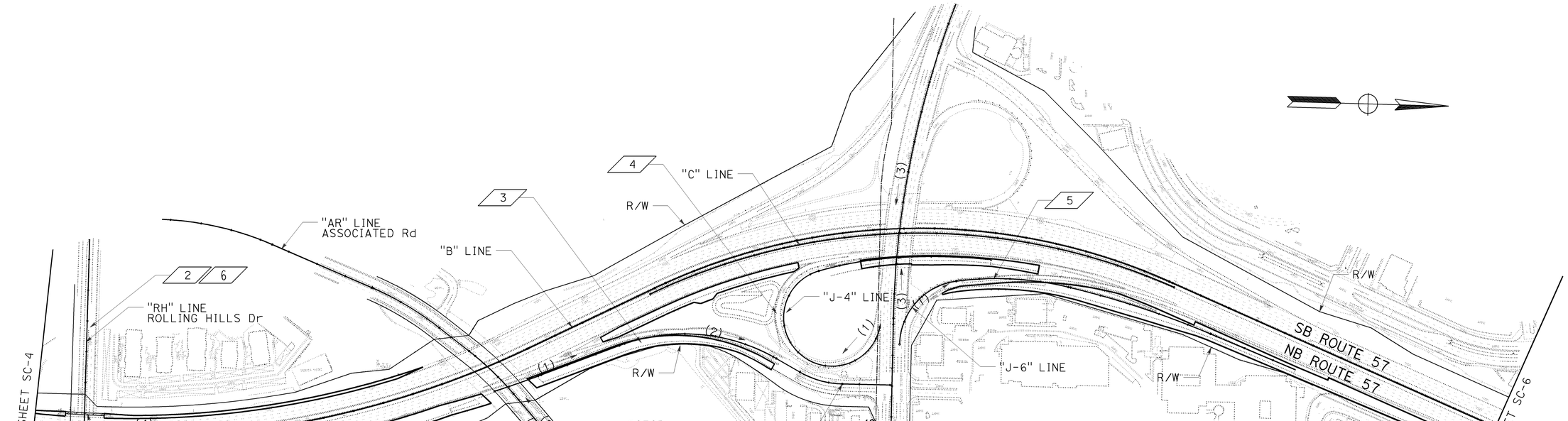

STAGE CONSTRUCTION INDEX
STAGE 2
NO SCALE

SC-5

THIS PLAN ACCURATE FOR STAGE CONSTRUCTION AND TRAFFIC HANDLING WORK ONLY

STATE OF CALIFORNIA - DEPARTMENT OF TRANSPORTATION
Caltrans

CONSULTANT FUNCTIONAL SUPERVISOR: THOMAS IONTA
CALCULATED-DESIGNED BY: RYAN MITRY
CHECKED BY: MIKE ROBINSON
REVISED BY
DATE REVISED

LAST REVISION | DATE PLOTTED => 25-JAN-2010 | TIME PLOTTED => 10:11
00-00-00

BORDER LAST REVISED 4/11/2008 | RELATIVE BORDER SCALE IS IN INCHES 0 1 2 3 | USERNAME => trstrk | DGN FILE => c0F032ma005.dgn | CU 12220 | EA 0F0321

Dist	COUNTY	ROUTE	POST MILES TOTAL PROJECT	SHEET No.	TOTAL SHEETS
12	Ora	57	18.4/20.9	167	856

REGISTERED CIVIL ENGINEER — 06/15/09 DATE

1-25-10
PLANS APPROVAL DATE

REGISTERED PROFESSIONAL ENGINEER
THOMAS M. IONTA
No. C45818
Exp. 12-31-10
CIVIL
STATE OF CALIFORNIA

THE STATE OF CALIFORNIA OR ITS OFFICERS OR AGENTS SHALL NOT BE RESPONSIBLE FOR THE ACCURACY OR COMPLETENESS OF SCANNED COPIES OF THIS PLAN SHEET.

CH2M HILL
6 HUTTON CENTRE DRIVE,
SUITE 700
SANTA ANA, CA 92707

OCTA
550 S. MAIN STREET
ORANGE, CA 92863

CONSTRUCTION NOTES:

3 STAGE 2, PHASE 2: CONSTRUCT BIRCH St UC BRIDGE WIDENING.
(AFTER COMPLETION OF ROLLING HILLS Dr UC BRIDGE WIDENING
AND WHEN ROLLING HILLS Dr IS OPEN TO TRAFFIC WITH PERMANENT PAVEMENT DELINEATION.)

4 COMPLETE CONSTRUCTION OF THE NB OFF-RAMP TO LAMBERT Rd. COMPLETE
CONSTRUCTION OF THE ROUTE 57 WIDENING AT THE NB OFF-RAMP TO LAMBERT Rd.

TRAFFIC HANDLING NOTES:

7 RESTRIPE EXITING BIRCH St. AS SHOWN ON PLANS.
SHIFT TRAFFIC INTO TEMPORARY LANES AS SHOWN ON PLANS.
RESTRIPE WITH PERMANENT PAVEMENT DELINEATION FROM
"BS" 25+12 TO "B" 28+87 PRIOR TO START OF STAGE 3.

8 STRIPE EXIT FROM MAINLINE IN TEMPORARY LANE. SHIFT TRAFFIC
FOR THE NB OFF-RAMP TO LAMBERT Rd TO NEW PAVEMENT FROM
STAGE 1.

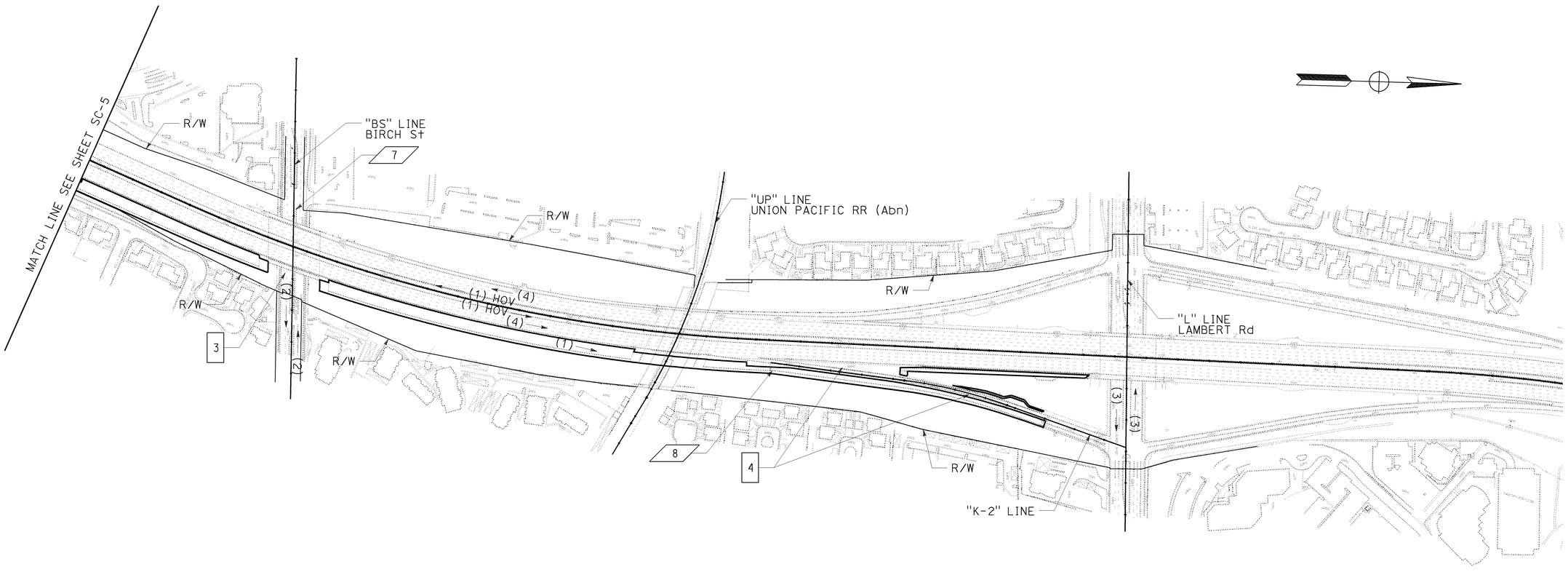

STAGE CONSTRUCTION INDEX
STAGE 2
NO SCALE

SC-6

THIS PLAN ACCURATE FOR STAGE CONSTRUCTION AND TRAFFIC HANDLING WORK ONLY

CALCULATED-DESIGNED BY: RYAN MITRY
CHECKED BY: MIKE ROBINSON
CONSULTANT FUNCTIONAL SUPERVISOR: THOMAS IONTA
STATE OF CALIFORNIA - DEPARTMENT OF TRANSPORTATION
Caltrans

REVISED BY | DATE REVISED

LAST REVISION | DATE PLOTTED => 25-JAN-2010
00-00-00 | TIME PLOTTED => 10:11

BORDER LAST REVISED 4/11/2008

RELATIVE BORDER SCALE IS IN INCHES 0 1 2 3

USERNAME => trstrk
DGN FILE => c0F032ma006.dgn

CU 12220

EA 0F0321

Dist	COUNTY	ROUTE	POST MILES TOTAL PROJECT	SHEET No.	TOTAL SHEETS
12	Ora	57	18.4/20.9	168	856

REGISTERED CIVIL ENGINEER — 06/15/09 DATE

1-25-10
PLANS APPROVAL DATE

REGISTERED PROFESSIONAL ENGINEER — THOMAS M. IONTA — No. C45818 — Exp. 12-31-10 — CIVIL — STATE OF CALIFORNIA

THE STATE OF CALIFORNIA OR ITS OFFICERS OR AGENTS SHALL NOT BE RESPONSIBLE FOR THE ACCURACY OR COMPLETENESS OF SCANNED COPIES OF THIS PLAN SHEET.

CH2M HILL
6 HUTTON CENTRE DRIVE,
SUITE 700
SANTA ANA, CA 92707

OCTA
550 S. MAIN STREET
ORANGE, CA 92863

CONSTRUCTION NOTES:

1. CONSTRUCT NB ASSOCIATED Rd UC BRIDGE WIDENING.
2. COMPLETE CONSTRUCTION OF THE NB ON-RAMP FROM IMPERIAL Hwy.

TRAFFIC HANDLING NOTES:

1. RESTRIPE EXISTING ASSOCIATED Rd. AS SHOWN ON PLANS. SHIFT TRAFFIC INTO TEMPORARY LANES AS SHOWN ON PLANS. RESTRIPE WITH PERMANENT PAVEMENT DELINEATION FROM "AR" 589+00 TO "AR" 600+30 PRIOR TO START OF STAGE 4.
2. MAINTAIN TRAFFIC ON NB OFF-RAMP TO IMPERIAL IN Temp LANE CONFIGURATION AS SHOWN IN STAGE 1.
3. MAINTAIN TRAFFIC ON NB-LOOP ON RAMP.
4. CLOSE NB ON-RAMP FROM IMPERIAL Hwy 2 WEEK MAX.
5. STRIPE NB ON-RAMP TO Temp MAINLINE PAVEMENT DELINEATION AFTER RAMP CONSTRUCTION.

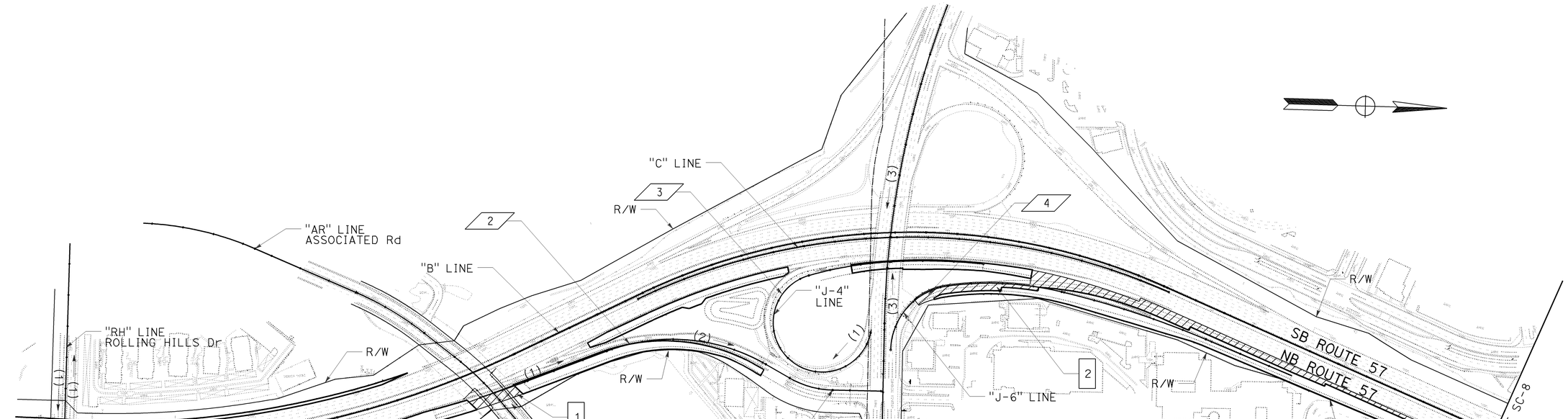

STAGE CONSTRUCTION INDEX
STAGE 3
NO SCALE

SC-7

THIS PLAN ACCURATE FOR STAGE CONSTRUCTION AND TRAFFIC HANDLING WORK ONLY

STATE OF CALIFORNIA - DEPARTMENT OF TRANSPORTATION
CONSULTANT FUNCTIONAL SUPERVISOR: THOMAS IONTA
CALCULATED-DESIGNED BY: RYAN MITRY
CHECKED BY: MIKE ROBINSON
REVISED BY | DATE REVISED

LAST REVISION | DATE PLOTTED => 25-JAN-2010
00-00-00 | TIME PLOTTED => 10:11

BORDER LAST REVISED 4/11/2008 | RELATIVE BORDER SCALE IS IN INCHES 0 1 2 3 | USERNAME => trstrk | DGN FILE => c0F032ma007.dgn | CU 12220 | EA 0F0321

Dist	COUNTY	ROUTE	POST MILES TOTAL PROJECT	SHEET No.	TOTAL SHEETS
12	Ora	57	18.4/20.9	169	856

REGISTERED CIVIL ENGINEER — 06/15/09 DATE

1-25-10
PLANS APPROVAL DATE

REGISTERED PROFESSIONAL ENGINEER
THOMAS M. IONTA
No. C45818
Exp. 12-31-10
CIVIL
STATE OF CALIFORNIA

THE STATE OF CALIFORNIA OR ITS OFFICERS OR AGENTS SHALL NOT BE RESPONSIBLE FOR THE ACCURACY OR COMPLETENESS OF SCANNED COPIES OF THIS PLAN SHEET.

CH2M HILL
6 HUTTON CENTRE DRIVE,
SUITE 700
SANTA ANA, CA 92707

OCTA
550 S. MAIN STREET
ORANGE, CA 92863

CONSTRUCTION NOTE:

1 INSTALL PERMANENT PAVEMENT DELINEATION FOR THE NB OFF-RAMP TO LAMBERT Rd.

TRAFFIC HANDLING NOTE:

6 RESTRIPE NB OFF-RAMP TO LAMBERT FROM MAINLINE AS SHOWN ON PLANS DURING WEEKEND CLOSURE OF OFFRAMP.

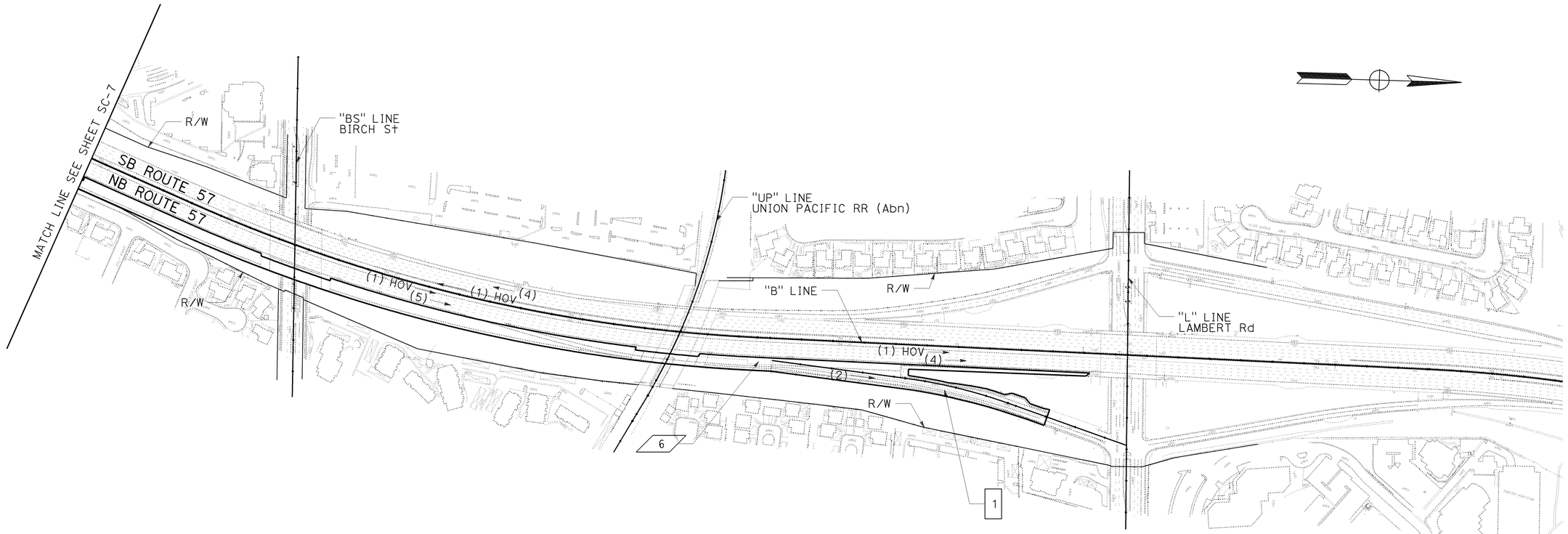

STAGE CONSTRUCTION INDEX
STAGE 3
NO SCALE

SC-8

THIS PLAN ACCURATE FOR STAGE CONSTRUCTION AND TRAFFIC HANDLING WORK ONLY

STATE OF CALIFORNIA - DEPARTMENT OF TRANSPORTATION
Caltrans
CONSULTANT FUNCTIONAL SUPERVISOR: THOMAS IONTA
CALCULATED-DESIGNED BY: RYAN MITRY
CHECKED BY: MIKE ROBINSON
REVISED BY
DATE REVISED

LAST REVISION DATE PLOTTED => 25-JAN-2010
00-00-00 TIME PLOTTED => 10:12

BORDER LAST REVISED 4/11/2008
RELATIVE BORDER SCALE IS IN INCHES 0 1 2 3
USERNAME => trstrk
DGN FILE => c0F032ma008.dgn
CU 12220
EA 0F0321

Dist	COUNTY	ROUTE	POST MILES TOTAL PROJECT	SHEET No.	TOTAL SHEETS
12	Ora	57	18.4/20.9	170	856

REGISTERED CIVIL ENGINEER — 06/15/09 DATE

1-25-10
PLANS APPROVAL DATE

REGISTERED PROFESSIONAL ENGINEER — THOMAS M. IONTA — No. C45818 — Exp. 12-31-10 — CIVIL — STATE OF CALIFORNIA

THE STATE OF CALIFORNIA OR ITS OFFICERS OR AGENTS SHALL NOT BE RESPONSIBLE FOR THE ACCURACY OR COMPLETENESS OF SCANNED COPIES OF THIS PLAN SHEET.

CH2M HILL
6 HUTTON CENTRE DRIVE,
SUITE 700
SANTA ANA, CA 92707

OCTA
550 S. MAIN STREET
ORANGE, CA 92863

CONSTRUCTION NOTES:

1. COMPLETE CONSTRUCTION OF THE NB OFF-RAMP TO IMPERIAL Hwy.
2. STAGE 4, PHASE 1: COMPLETE CONSTRUCTION OF THE NB LOOP ON-RAMP FROM IMPERIAL Hwy.
3. STAGE 4, PHASE 2: CONSTRUCT CURB AND GUTTER AND JOIN AREA OF THE NB LOOP ON-RAMP FROM IMPERIAL Hwy.

TRAFFIC HANDLING NOTES:

1. STRIPE OFF-RAMP FROM MAINLINE. SHIFT TRAFFIC FOR NB OFF-RAMP TO IMPERIAL Hwy ONTO NEW PAVEMENT FROM STAGE 1.
2. OPEN ASSOCIATED Rd. TO PERMANENT PAVEMENT DELINEATION.
3. CLOSE NB LOOP ON-RAMP FROM IMPERIAL Hwy 2 WEEK Max. MAINTAIN 3 LANE EB TRAFFIC ON IMPERIAL Hwy DURING PHASE 1.
4. CLOSE ONE EB LANE ON IMPERIAL Hwy DURING PHASE 2 AS SHOWN ON THE PLANS DURING WEEKEND CLOSURE TO JOIN AREA. (WEEKEND CLOSURE IS PART OF 2-WEEK Max CLOSURE.)

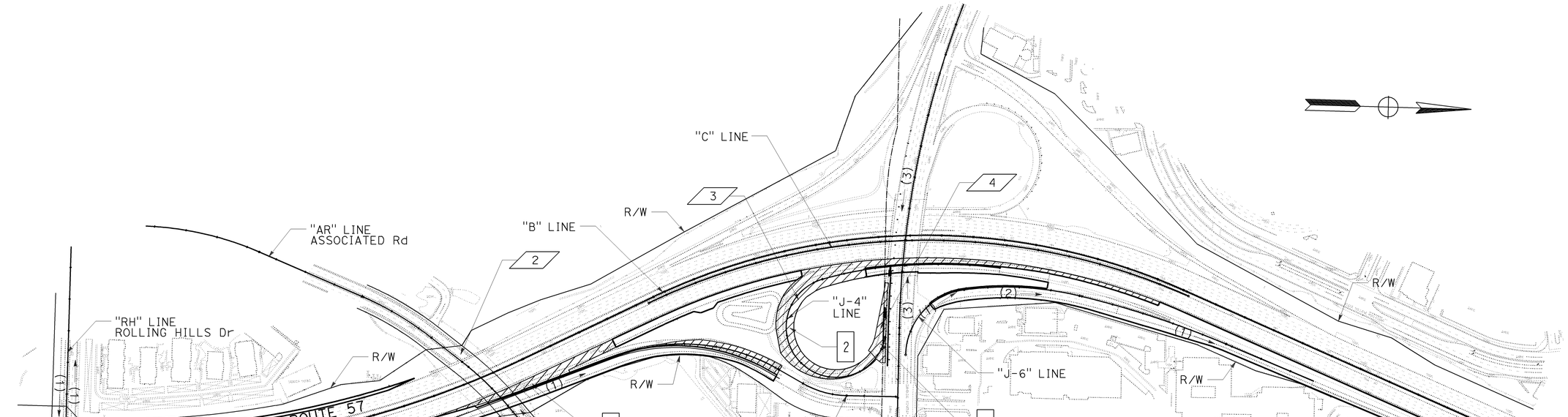

STAGE CONSTRUCTION INDEX
STAGE 4
NO SCALE

SC-9

THIS PLAN ACCURATE FOR STAGE CONSTRUCTION AND TRAFFIC HANDLING WORK ONLY

STATE OF CALIFORNIA - DEPARTMENT OF TRANSPORTATION
CONSULTANT FUNCTIONAL SUPERVISOR: THOMAS IONTA
CALCULATED-DESIGNED BY: RYAN MITRY
CHECKED BY: MIKE ROBINSON
REVISED BY | DATE REVISED

LAST REVISION | DATE PLOTTED => 25-JAN-2010
00-00-00 | TIME PLOTTED => 10:12

BORDER LAST REVISED 4/11/2008 | RELATIVE BORDER SCALE IS IN INCHES 0 1 2 3 | USERNAME => trstrk | DGN FILE => c0F032ma009.dgn | CU 12220 | EA 0F0321

Dist	COUNTY	ROUTE	POST MILES TOTAL PROJECT	SHEET No.	TOTAL SHEETS
12	Ora	57	18.4/20.9	171	856

REGISTERED CIVIL ENGINEER — 11-16-09 DATE

THOMAS M. IONTA — No. C45818 — Exp. 12-31-10 — CIVIL — REGISTERED PROFESSIONAL ENGINEER — STATE OF CALIFORNIA

1-25-10
PLANS APPROVAL DATE

THE STATE OF CALIFORNIA OR ITS OFFICERS OR AGENTS SHALL NOT BE RESPONSIBLE FOR THE ACCURACY OR COMPLETENESS OF SCANNED COPIES OF THIS PLAN SHEET.

CH2M HILL
6 HUTTON CENTRE DRIVE,
SUITE 700
SANTA ANA, CA 92707

OCTA
550 S. MAIN STREET
ORANGE, CA 92863

NOTES:

1. FOR COMPLETE RIGHT OF WAY AND ACCURATE ACCESS DATA, SEE RIGHT OF WAY RECORD MAPS AT DISTRICT OFFICE.
2. EXACT LOCATION AND POSITION OF CONSTRUCTION AREA SIGNS TO BE DETERMINED BY THE ENGINEER.
3. SEE SIGN PLANS, TRAFFIC HANDLING PLANS AND CONSTRUCTION AREA SIGN PLANS FOR ADDITIONAL SIGNS.
4. STATION/OFFSET DATA SHOWN FOR TEMPORARY RAILING (TYPE K) IS TO THE CENTER OF THE RAILING.
5. COORDINATION WITH SOUTH SEGMENT CONTRACTOR FOR CONTRACT No. 12-0F0314 COULD PRECLUDE THE NEED FOR NB TRANSITION STRIPING & ALLOW FOR THE JOIN OF CONTRACT No. 12-0F0314 & THIS PROJECT STRIPING AT STA "B" 587+15.
6. ALL Temp FENCE (TYPE CL-6) SHALL HAVE PRIVACY SCREEN UNLESS OTHERWISE NOTED.

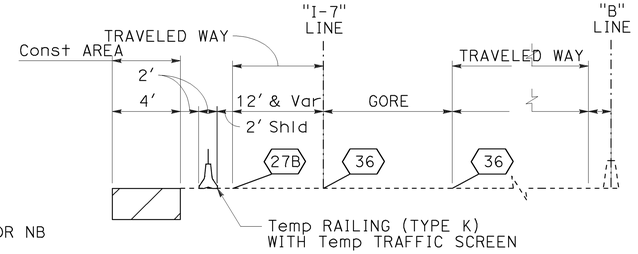

SECTION A-A
NO SCALE

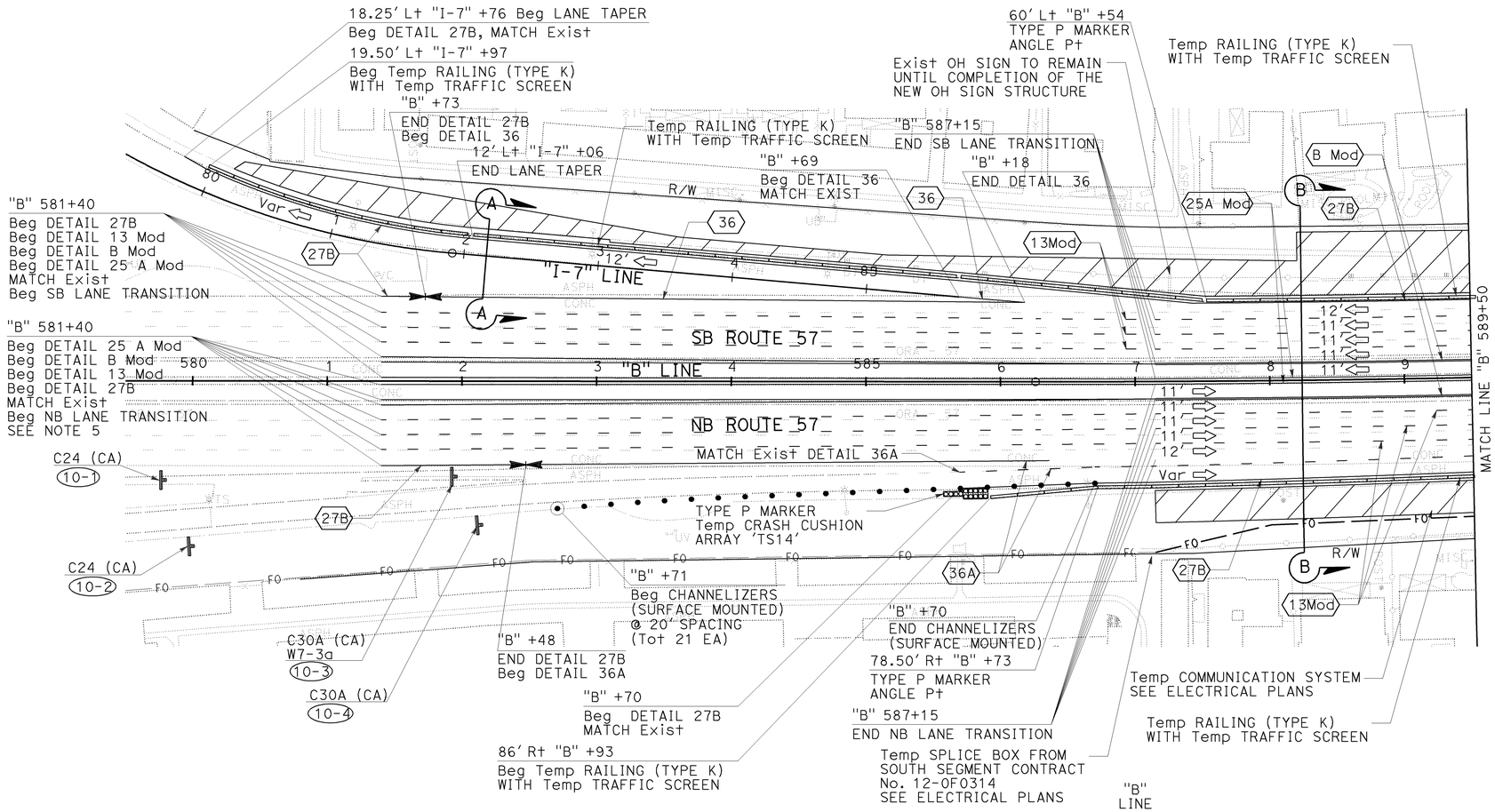

LEGEND

- (No.) OR (No.) — PAVEMENT DELINEATION DETAIL PAINT TRAFFIC STRIPE (2 COAT)
- CHANGE IN PAVEMENT DELINEATION
- CHANNELIZERS (SURFACE MOUNTED)
- DIRECTION OF TRAVEL
- TEMPORARY RAILING (TYPE K) WITH Temp TRAFFIC SCREEN AS NOTED (PLAN VIEW)
- TEMPORARY RAILING (TYPE K) WITH Temp TRAFFIC SCREEN (SECTION VIEW)
- TEMPORARY CRASH CUSHION ARRAY PER PLAN
- CONSTRUCTION AREA
- (No.) CONSTRUCTION AREA SIGN (STAGE CONSTRUCTION)
- CONSTRUCTION AREA SIGN (1 POST)
- CONSTRUCTION AREA SIGN (2 POST)
- TYPE III BARICADE
- PCMS-1 — PORTABLE CHANGEABLE MESSAGE SIGN
- -FO- — TEMPORARY COMMUNICATION SYSTEM (FIBER OPTIC) SEE ELECTRICAL PLANS
- (No.) — CURVE DATA NUMBER

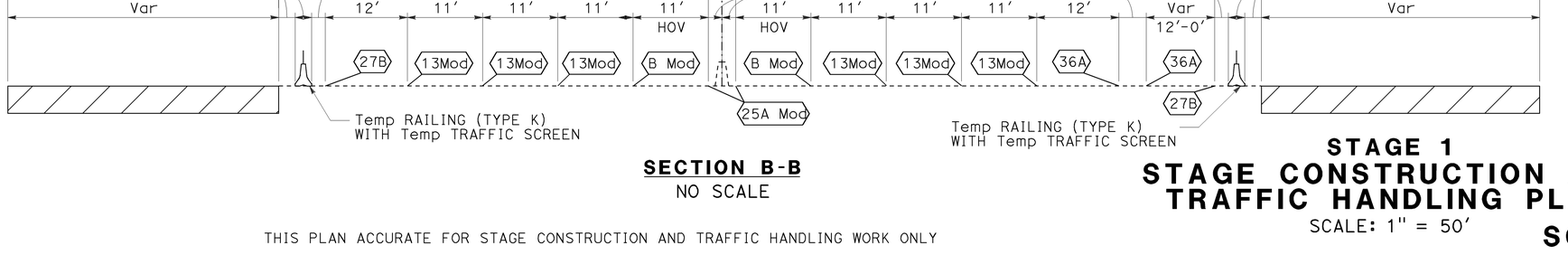

SECTION B-B
NO SCALE

THIS PLAN ACCURATE FOR STAGE CONSTRUCTION AND TRAFFIC HANDLING WORK ONLY

STAGE 1
STAGE CONSTRUCTION AND TRAFFIC HANDLING PLAN

SCALE: 1" = 50′

SC-10

REVISED BY | DATE REVISED
RYAN MITRY | MIKE ROBINSON
CALCULATED-DESIGNED BY | CHECKED BY
THOMAS IONTA
CONSULTANT FUNCTIONAL SUPERVISOR
STATE OF CALIFORNIA - DEPARTMENT OF TRANSPORTATION
Caltrans

LAST REVISION | DATE PLOTTED => 25-JAN-2010
00-00-00 | TIME PLOTTED => 10:12

BORDER LAST REVISED 4/11/2008
RELATIVE BORDER SCALE IS IN INCHES 0 1 2 3
USERNAME => trstrk
DGN FILE => c0F032ma010.dgn
CU 12220
EA 0F0321

Dist	COUNTY	ROUTE	POST MILES TOTAL PROJECT	SHEET No.	TOTAL SHEETS
12	Ora	57	18.4/20.9	172	856

REGISTERED CIVIL ENGINEER — 06/15/09 DATE

1-25-10
PLANS APPROVAL DATE

REGISTERED PROFESSIONAL ENGINEER — THOMAS M. IONTA — No. C45818 — Exp. 12-31-10 — CIVIL — STATE OF CALIFORNIA

THE STATE OF CALIFORNIA OR ITS OFFICERS OR AGENTS SHALL NOT BE RESPONSIBLE FOR THE ACCURACY OR COMPLETENESS OF SCANNED COPIES OF THIS PLAN SHEET.

CH2M HILL
6 HUTTON CENTRE DRIVE,
SUITE 700
SANTA ANA, CA 92707

OCTA
550 S. MAIN STREET
ORANGE, CA 92863

NOTES:

1. FOR COMPLETE RIGHT OF WAY AND ACCURATE ACCESS DATA, SEE RIGHT OF WAY RECORD MAPS AT DISTRICT OFFICE.
2. FOR LEGEND AND NOTES SEE SHEET SC-10.

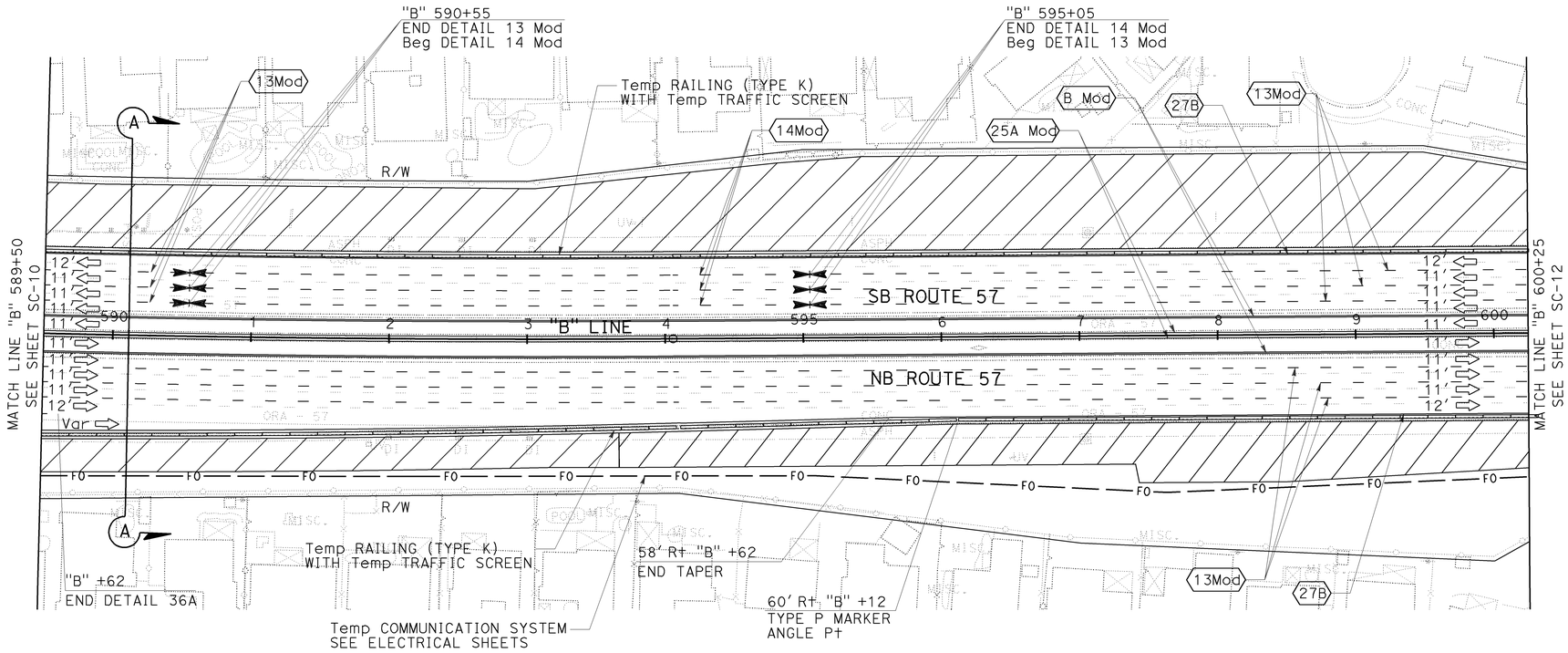

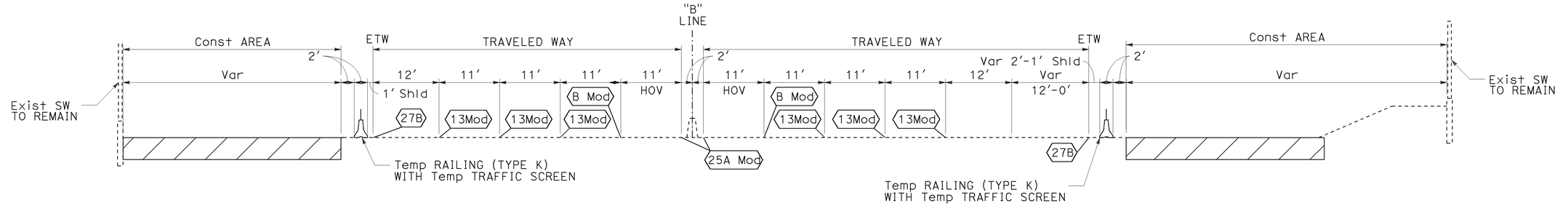

SECTION A-A
NO SCALE

STAGE 1
STAGE CONSTRUCTION AND TRAFFIC HANDLING PLAN

SCALE: 1" = 50'

SC-11

THIS PLAN ACCURATE FOR STAGE CONSTRUCTION AND TRAFFIC HANDLING WORK ONLY

REVISED BY: RYAN MITRY
DATE REVISED:
CALCULATED-DESIGNED BY: MIKE ROBINSON
CHECKED BY:
CONSULTANT FUNCTIONAL SUPERVISOR: THOMAS IONTA
STATE OF CALIFORNIA - DEPARTMENT OF TRANSPORTATION
Caltrans

LAST REVISION DATE PLOTTED => 25-JAN-2010
00-00-00 TIME PLOTTED => 0:12

BORDER LAST REVISED 4/11/2008
RELATIVE BORDER SCALE IS IN INCHES 0 1 2 3
USERNAME => trstrk
DGN FILE => c0F032ma011.dgn
CU 12220
EA 0F0321

Dist	COUNTY	ROUTE	POST MILES TOTAL PROJECT	SHEET No.	TOTAL SHEETS
12	Ora	57	18.4/20.9	173	856

REGISTERED CIVIL ENGINEER — 06/15/09 DATE

1-25-10
PLANS APPROVAL DATE

REGISTERED PROFESSIONAL ENGINEER — THOMAS M. IONTA — No. C45818 — Exp. 12-31-10 — CIVIL — STATE OF CALIFORNIA

THE STATE OF CALIFORNIA OR ITS OFFICERS OR AGENTS SHALL NOT BE RESPONSIBLE FOR THE ACCURACY OR COMPLETENESS OF SCANNED COPIES OF THIS PLAN SHEET.

CH2M HILL
6 HUTTON CENTRE DRIVE,
SUITE 700
SANTA ANA, CA 92707

OCTA
550 S. MAIN STREET
ORANGE, CA 92863

NOTES:

1. FOR COMPLETE RIGHT OF WAY AND ACCURATE ACCESS DATA, SEE RIGHT OF WAY RECORD MAPS AT DISTRICT OFFICE.
2. FOR LEGEND AND NOTES SEE SHEET SC-10.

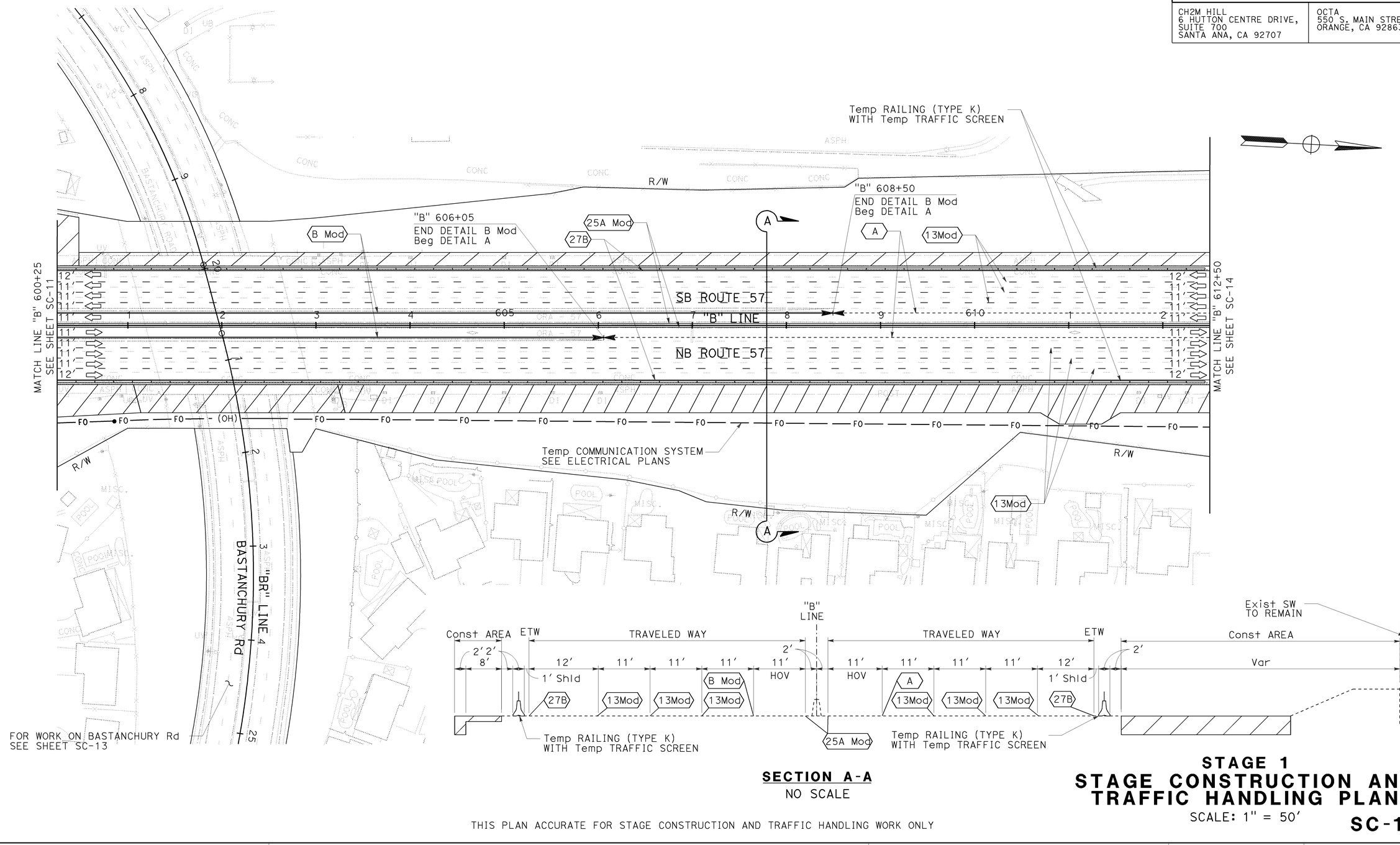

SECTION A-A
NO SCALE

THIS PLAN ACCURATE FOR STAGE CONSTRUCTION AND TRAFFIC HANDLING WORK ONLY

STAGE 1
STAGE CONSTRUCTION AND TRAFFIC HANDLING PLAN

SCALE: 1" = 50'

SC-12

REVISED BY | DATE REVISED
RYAN MITRY | MIKE ROBINSON
CALCULATED-DESIGNED BY | CHECKED BY
CONSULTANT FUNCTIONAL SUPERVISOR: THOMAS IONTA
STATE OF CALIFORNIA - DEPARTMENT OF TRANSPORTATION
Caltrans

LAST REVISION | DATE PLOTTED => 25-JAN-2010
00-00-00 | TIME PLOTTED => 10:12

BORDER LAST REVISED 4/11/2008 | RELATIVE BORDER SCALE IS IN INCHES 0 1 2 3 | USERNAME => trstrk | DGN FILE => c0F032ma012.dgn | CU 12220 | EA 0F0321

NOTES:

1. FOR COMPLETE RIGHT OF WAY AND ACCURATE ACCESS DATA, SEE RIGHT OF WAY RECORD MAPS AT DISTRICT OFFICE.
2. FOR LEGEND AND NOTES SEE SHEET SC-10.
3. FOR WORK ON ROUTE 57 SEE SHEET SC-12.

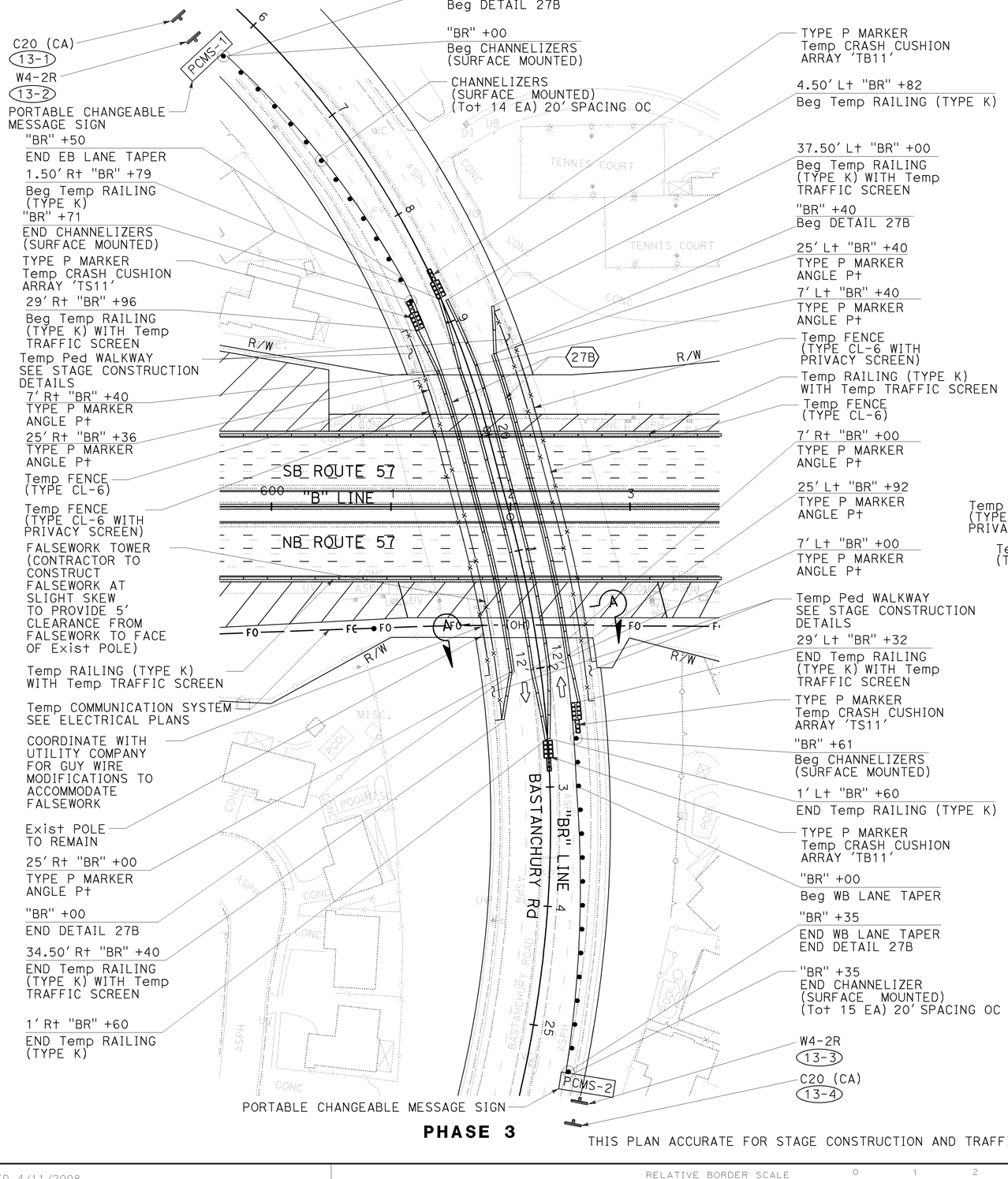

PHASE 3

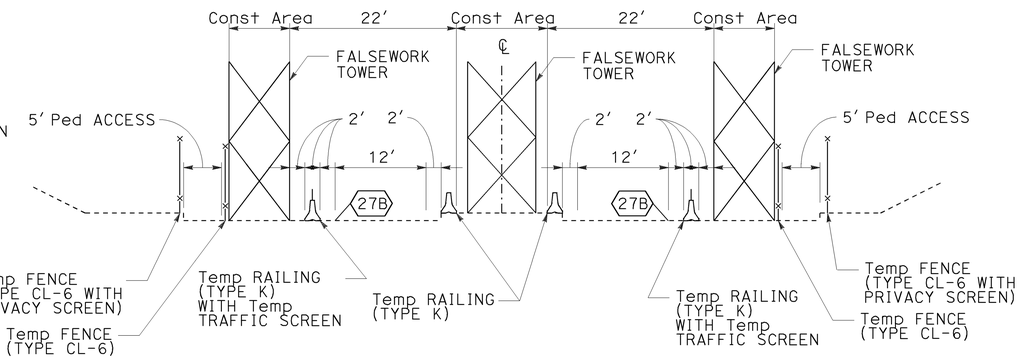

SECTION A-A
NO SCALE

BASTANCHURY ROAD PHASING DURING FLASE WORK CONSTRUCTION

	CONSTRUCTION	TRAFFIC HANDLING
STAGE 1 PHASE 1	ERECT FALSEWORK OVER EB LANES	SHIFT EB & WB TRAFFIC ONTO WB ROADWAY PER STANDARD PLAN T12
STAGE 1 PHASE 2	ERECT FALSEWORK OVER WB LANES	PROVIDE 1-WAY ALTERNATING TRAFIC ON THE EB ROADWAY PER STANDARD PLAN T13

PORTABLE CHANGEABLE MESSAGE SIGN

PCMS No.	SIGN MESSAGE
PCMS-1	FLASHING LEFT ARROWS
PCMS-2	FLASHING LEFT ARROWS

THIS PLAN ACCURATE FOR STAGE CONSTRUCTION AND TRAFFIC HANDLING WORK ONLY

STAGE 1
STAGE CONSTRUCTION AND TRAFFIC HANDLING PLAN

SCALE: 1" = 50'

SC-13

Dist	COUNTY	ROUTE	POST MILES TOTAL PROJECT	SHEET No.	TOTAL SHEETS
12	Ora	57	18.4/20.9	174	856

REGISTERED CIVIL ENGINEER — 06/15/09 DATE

THOMAS M. IONTA No. C45818 Exp. 12-31-10 CIVIL — REGISTERED PROFESSIONAL ENGINEER — STATE OF CALIFORNIA

1-25-10
PLANS APPROVAL DATE

THE STATE OF CALIFORNIA OR ITS OFFICERS OR AGENTS SHALL NOT BE RESPONSIBLE FOR THE ACCURACY OR COMPLETENESS OF SCANNED COPIES OF THIS PLAN SHEET.

CH2M HILL
6 HUTTON CENTRE DRIVE, SUITE 700
SANTA ANA, CA 92707

OCTA
550 S. MAIN STREET
ORANGE, CA 92863

REVISED BY | DATE REVISED
RYAN MITRY | MIKE ROBINSON
CALCULATED-DESIGNED BY | CHECKED BY
SUPERVISOR: THOMAS IONTA
CONSULTANT FUNCTIONAL
STATE OF CALIFORNIA - DEPARTMENT OF TRANSPORTATION
Caltrans

LAST REVISION | DATE PLOTTED => 25-JAN-2010
00-00-00 | TIME PLOTTED => 10:12

BORDER LAST REVISED 4/11/2008 | RELATIVE BORDER SCALE IS IN INCHES 0 1 2 3 | USERNAME => trstrk DGN FILE => c0F032ma013.dgn | CU 12220 | EA 0F0321

NOTES:

1. FOR COMPLETE RIGHT OF WAY AND ACCURATE ACCESS DATA, SEE RIGHT OF WAY RECORD MAPS AT DISTRICT OFFICE.
2. FOR LEGEND AND NOTES SEE SHEET SC-10.

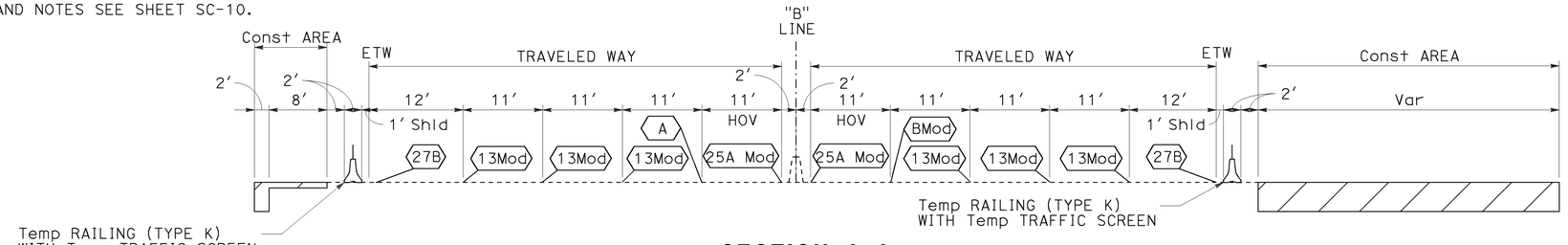

SECTION A-A
NO SCALE

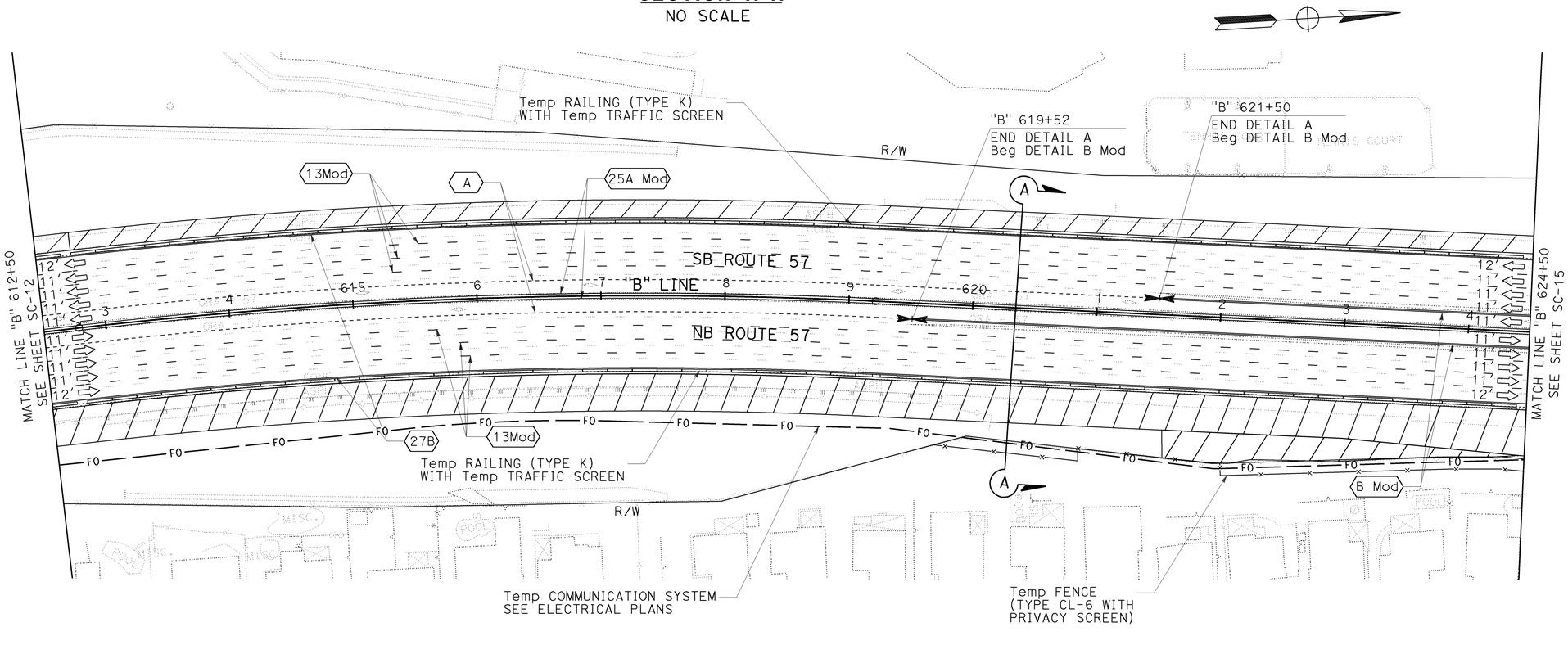

Dist	COUNTY	ROUTE	POST MILES TOTAL PROJECT	SHEET No.	TOTAL SHEETS
12	Ora	57	18.4/20.9	175	856

REGISTERED CIVIL ENGINEER — 11-16-09 DATE

THOMAS M. IONTA No. C45818 Exp. 12-31-10 CIVIL — REGISTERED PROFESSIONAL ENGINEER — STATE OF CALIFORNIA

1-25-10
PLANS APPROVAL DATE

THE STATE OF CALIFORNIA OR ITS OFFICERS OR AGENTS SHALL NOT BE RESPONSIBLE FOR THE ACCURACY OR COMPLETENESS OF SCANNED COPIES OF THIS PLAN SHEET.

CH2M HILL
6 HUTTON CENTRE DRIVE,
SUITE 700
SANTA ANA, CA 92707

OCTA
550 S. MAIN STREET
ORANGE, CA 92863

REVISED BY | DATE REVISED
RYAN MITRY | MIKE ROBINSON
CALCULATED-DESIGNED BY | CHECKED BY
THOMAS IONTA
CONSULTANT FUNCTIONAL SUPERVISOR
STATE OF CALIFORNIA - DEPARTMENT OF TRANSPORTATION
Caltrans

THIS PLAN ACCURATE FOR STAGE CONSTRUCTION AND TRAFFIC HANDLING WORK ONLY

STAGE 1
STAGE CONSTRUCTION AND TRAFFIC HANDLING PLAN

SCALE: 1" = 50'

SC-14

LAST REVISION 00-00-00 | DATE PLOTTED => 25-JAN-2010 | TIME PLOTTED => 10:12

Dist	COUNTY	ROUTE	POST MILES TOTAL PROJECT	SHEET No.	TOTAL SHEETS
12	Ora	57	18.4/20.9	176	856

REGISTERED CIVIL ENGINEER — 06/15/09 DATE

1-25-10
PLANS APPROVAL DATE

REGISTERED PROFESSIONAL ENGINEER — THOMAS M. IONTA — No. C45818 — Exp. 12-31-10 — CIVIL — STATE OF CALIFORNIA

THE STATE OF CALIFORNIA OR ITS OFFICERS OR AGENTS SHALL NOT BE RESPONSIBLE FOR THE ACCURACY OR COMPLETENESS OF SCANNED COPIES OF THIS PLAN SHEET.

CH2M HILL
6 HUTTON CENTRE DRIVE,
SUITE 700
SANTA ANA, CA 92707

OCTA
550 S. MAIN STREET
ORANGE, CA 92863

NOTES:

1. FOR COMPLETE RIGHT OF WAY AND ACCURATE ACCESS DATA, SEE RIGHT OF WAY RECORD MAPS AT DISTRICT OFFICE.
2. FOR LEGEND AND NOTES SEE SHEET SC-10.

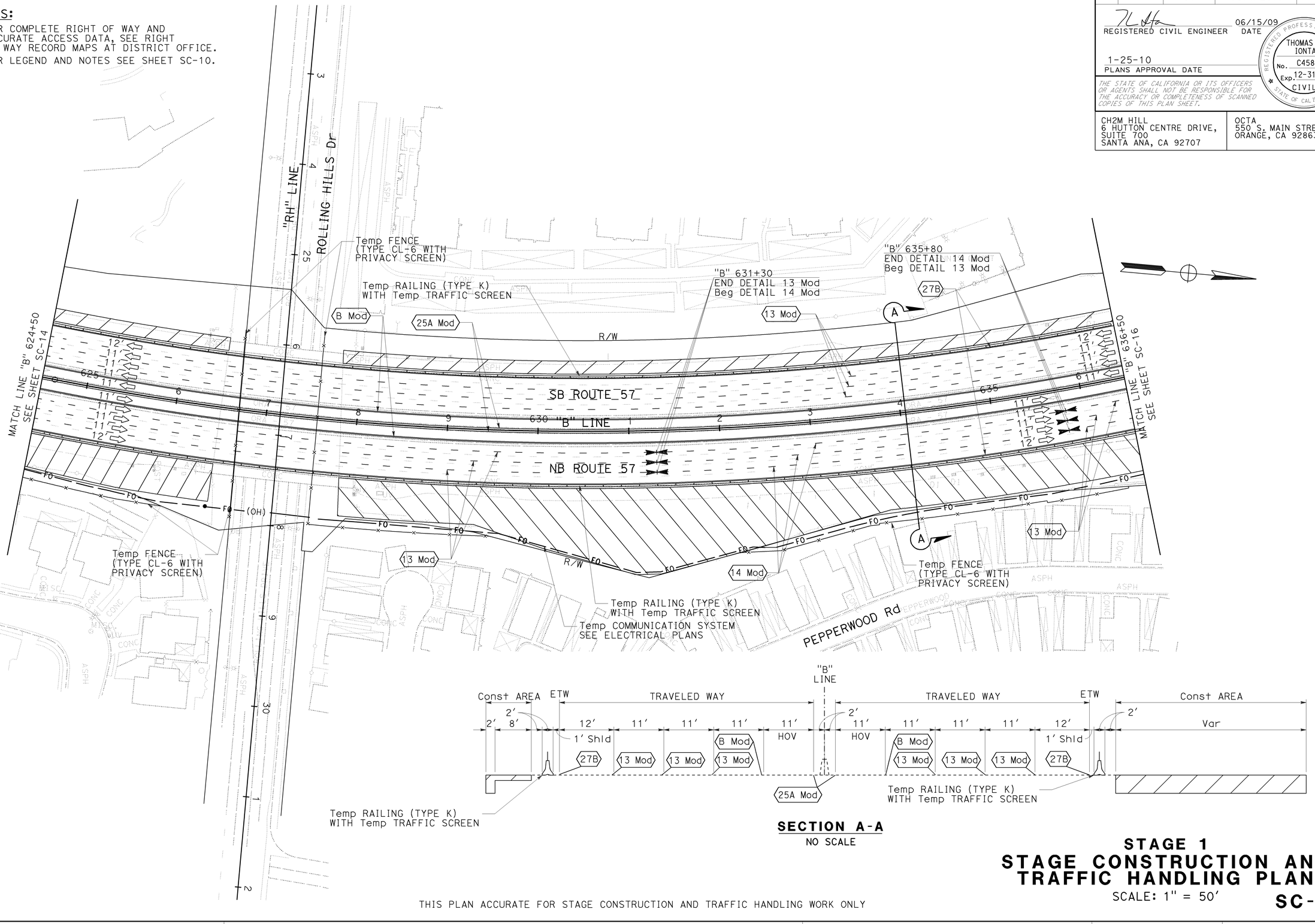

SECTION A-A
NO SCALE

THIS PLAN ACCURATE FOR STAGE CONSTRUCTION AND TRAFFIC HANDLING WORK ONLY

STAGE 1
STAGE CONSTRUCTION AND TRAFFIC HANDLING PLAN

SCALE: 1" = 50′

SC-15

REVISED BY | DATE REVISED
RYAN MITRY | MIKE ROBINSON
CALCULATED-DESIGNED BY | CHECKED BY
THOMAS IONTA
CONSULTANT FUNCTIONAL SUPERVISOR
STATE OF CALIFORNIA - DEPARTMENT OF TRANSPORTATION
Caltrans

LAST REVISION | DATE PLOTTED => 25-JAN-2010 | TIME PLOTTED => 09:00
00-00-00

BORDER LAST REVISED 4/11/2008
RELATIVE BORDER SCALE IS IN INCHES 0 1 2 3
USERNAME => trcarol
DGN FILE => c0F032ma015.dgn
CU 12220
EA 0F0321

NOTES:

1. FOR COMPLETE RIGHT OF WAY AND ACCURATE ACCESS DATA, SEE RIGHT OF WAY RECORD MAPS AT DISTRICT OFFICE.
2. FOR LEGEND AND NOTES SEE SHEET SC-10.

Dist	COUNTY	ROUTE	POST MILES TOTAL PROJECT	SHEET No.	TOTAL SHEETS
12	Ora	57	18.4/20.9	177	856

REGISTERED CIVIL ENGINEER — 06/15/09 DATE

1-25-10 PLANS APPROVAL DATE

REGISTERED PROFESSIONAL ENGINEER — THOMAS M. IONTA — No. C45818 — Exp. 12-31-10 — CIVIL — STATE OF CALIFORNIA

THE STATE OF CALIFORNIA OR ITS OFFICERS OR AGENTS SHALL NOT BE RESPONSIBLE FOR THE ACCURACY OR COMPLETENESS OF SCANNED COPIES OF THIS PLAN SHEET.

CH2M HILL
6 HUTTON CENTRE DRIVE,
SUITE 700
SANTA ANA, CA 92707

OCTA
550 S. MAIN STREET
ORANGE, CA 92863

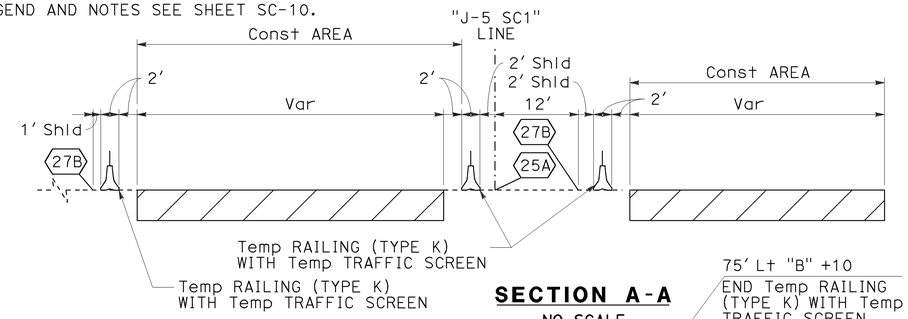

SECTION A-A
NO SCALE

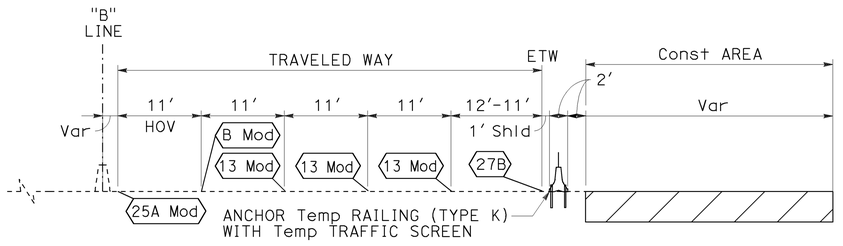

SECTION B-B
NO SCALE

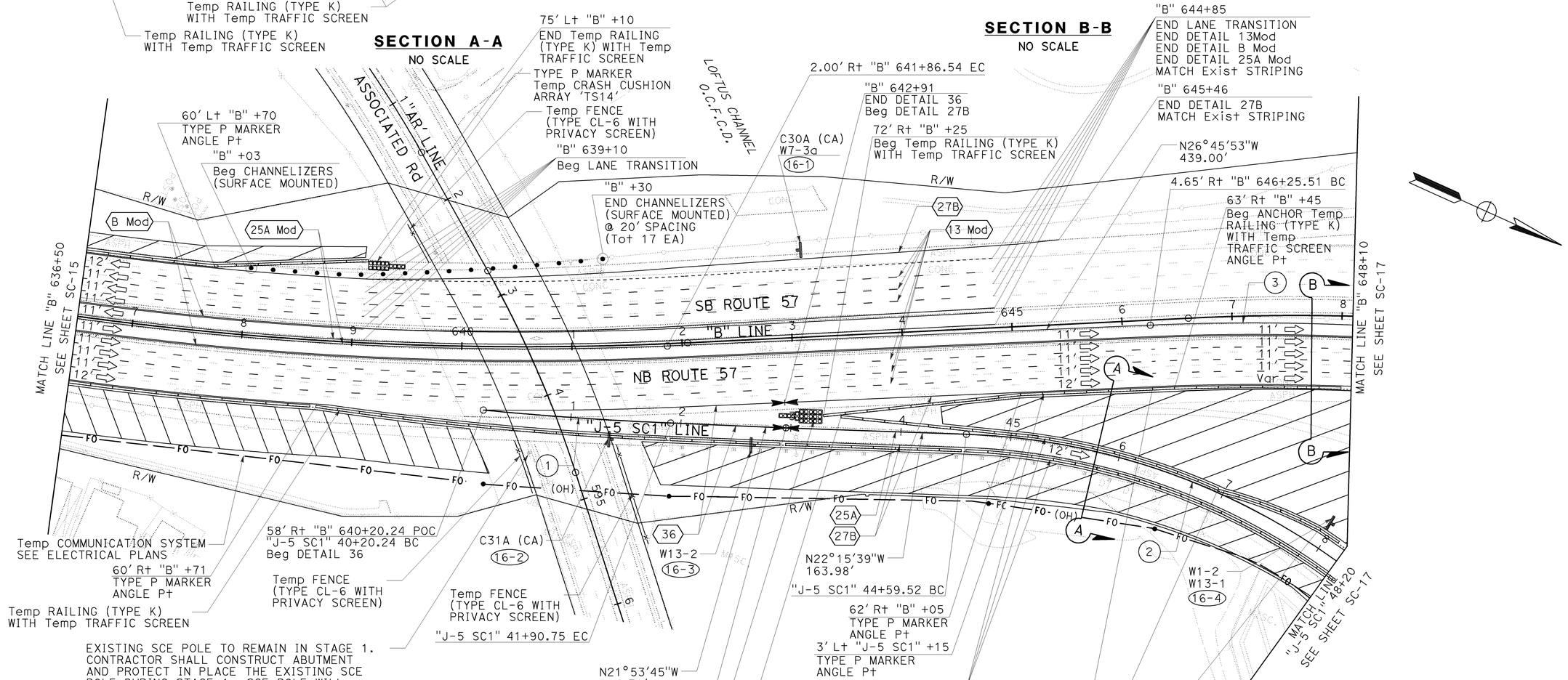

CURVE DATA

No.	R	Δ	T	L
1	3120.00'	3°07'52"	85.28'	170.51'
2	611.81'	50°36'09"	289.22'	540.34'
3	2161.00'	11°28'41"	217.18'	432.91'

STAGE 1
STAGE CONSTRUCTION AND TRAFFIC HANDLING PLAN

SCALE: 1" = 50'

SC-16

THIS PLAN ACCURATE FOR STAGE CONSTRUCTION AND TRAFFIC HANDLING WORK ONLY

STATE OF CALIFORNIA - DEPARTMENT OF TRANSPORTATION — Caltrans

CONSULTANT FUNCTIONAL SUPERVISOR: THOMAS IONTA

CALCULATED-DESIGNED BY: RYAN MITRY

CHECKED BY: MIKE ROBINSON

REVISED BY	DATE REVISED

LAST REVISION: DATE PLOTTED => 25-JAN-2010
00-00-00 TIME PLOTTED => 09:00

BORDER LAST REVISED 4/11/2008

RELATIVE BORDER SCALE IS IN INCHES 0 1 2 3

USERNAME => trcarol
DGN FILE => c0F032ma016.dgn

CU 12220

EA 0F0321

NOTES:

1. FOR COMPLETE RIGHT OF WAY AND ACCURATE ACCESS DATA, SEE RIGHT OF WAY RECORD MAPS AT DISTRICT OFFICE.
2. FOR LEGEND AND NOTES SEE SHEET SC-10.

Dist	COUNTY	ROUTE	POST MILES TOTAL PROJECT	SHEET No.	TOTAL SHEETS
12	Ora	57	18.4/20.9	178	856

REGISTERED CIVIL ENGINEER — 06/15/09 DATE

1-25-10
PLANS APPROVAL DATE

THOMAS M. IONTA No. C45818 Exp. 12-31-10 CIVIL — REGISTERED PROFESSIONAL ENGINEER — STATE OF CALIFORNIA

THE STATE OF CALIFORNIA OR ITS OFFICERS OR AGENTS SHALL NOT BE RESPONSIBLE FOR THE ACCURACY OR COMPLETENESS OF SCANNED COPIES OF THIS PLAN SHEET.

CH2M HILL
6 HUTTON CENTRE DRIVE, SUITE 700
SANTA ANA, CA 92707

OCTA
550 S. MAIN STREET
ORANGE, CA 92863

CURVE DATA

No.	R	Δ	T	L
(2)	611.81′	50°36′09"	289.22′	540.34′
(3)	2161.00′	11°28′41"	217.18′	432.91′
(4)	2061.00′	28°18′09"	519.65′	1018.07′
(6)	1750.84′	11°06′42"	170.31′	339.55′
(7)	1754.00′	2°45′47"	42.30′	84.58′
(8)	214.00′	42°50′17"	83.95′	160.00′
(9)	1214.00′	17°41′11"	188.87′	374.74′

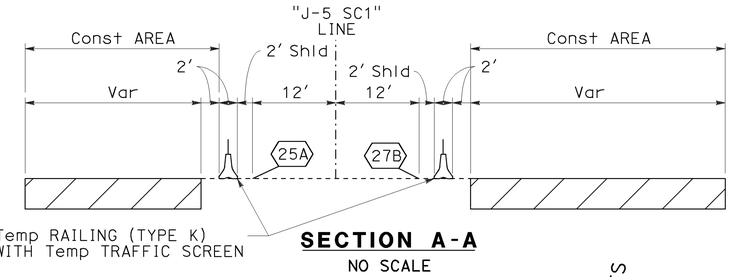

SECTION A-A
NO SCALE

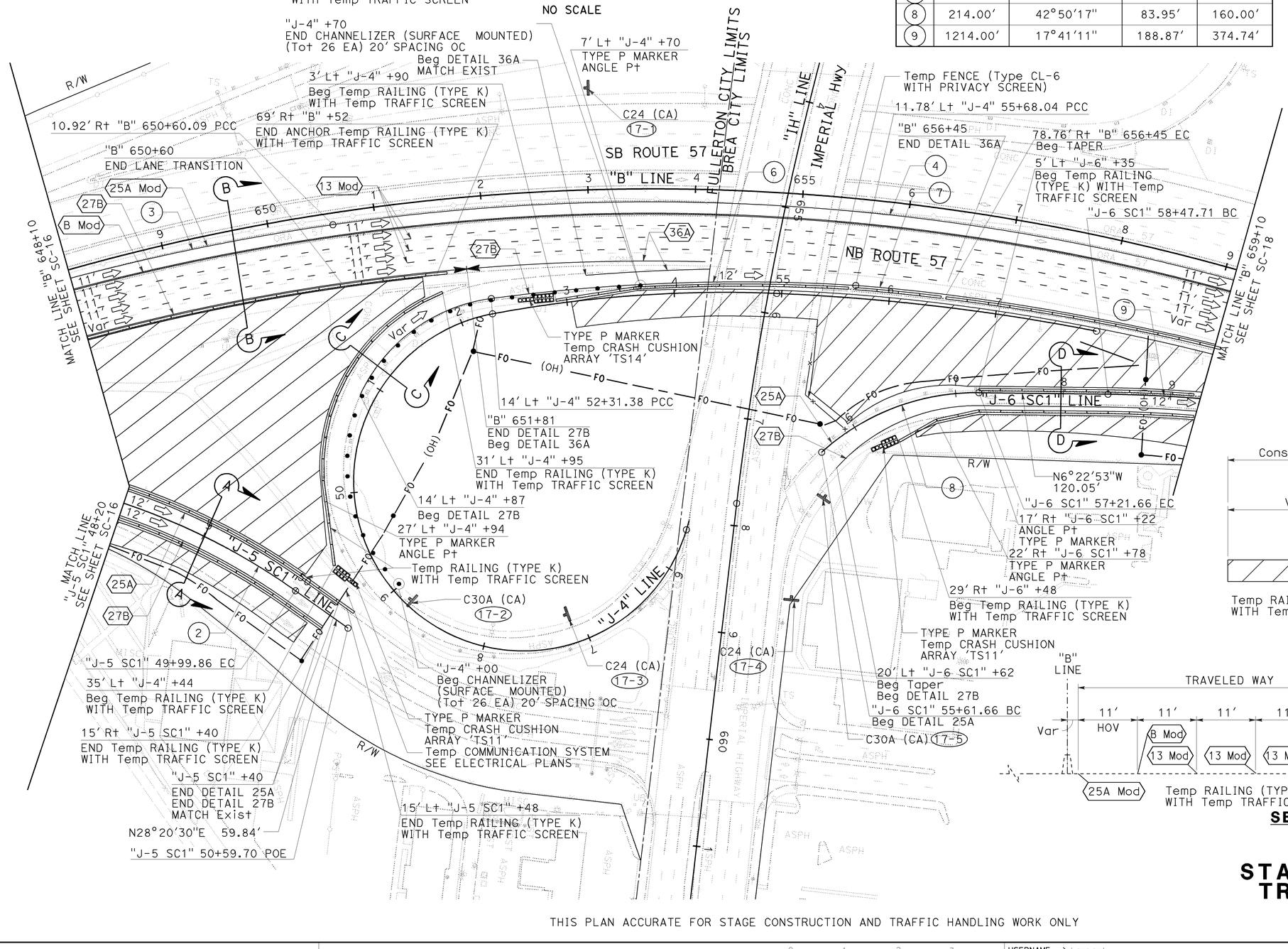

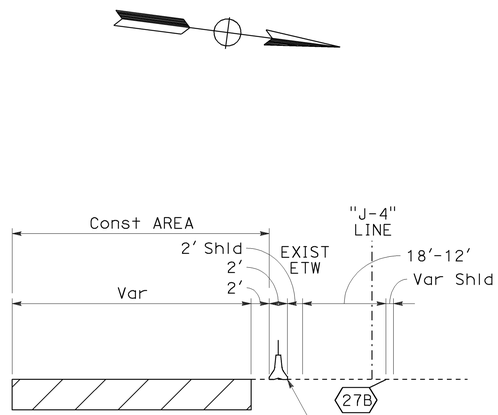

SECTION C-C
NO SCALE

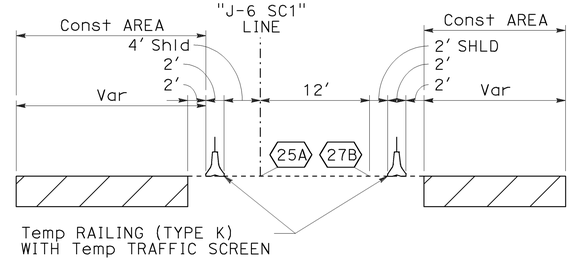

SECTION D-D
NO SCALE

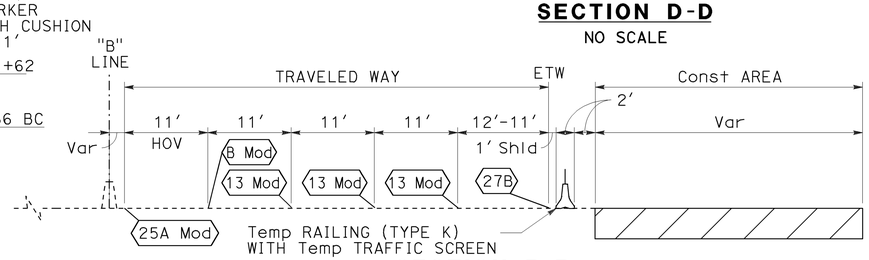

SECTION B-B
NO SCALE

STAGE 1
STAGE CONSTRUCTION AND TRAFFIC HANDLING PLAN

SCALE: 1" = 50′

SC-17

THIS PLAN ACCURATE FOR STAGE CONSTRUCTION AND TRAFFIC HANDLING WORK ONLY

REVISED BY | DATE REVISED
RYAN MITRY | MIKE ROBINSON
CALCULATED-DESIGNED BY | CHECKED BY
THOMAS IONTA
CONSULTANT FUNCTIONAL SUPERVISOR
STATE OF CALIFORNIA - DEPARTMENT OF TRANSPORTATION
Caltrans

LAST REVISION | DATE PLOTTED => 25-JAN-2010
00-00-00 | TIME PLOTTED => 09:00

BORDER LAST REVISED 4/11/2008

RELATIVE BORDER SCALE IS IN INCHES 0 1 2 3

USERNAME => trcarol
DGN FILE => c0F032ma017.dgn

CU 12220

EA 0F0321

Dist	COUNTY	ROUTE	POST MILES TOTAL PROJECT	SHEET No.	TOTAL SHEETS
12	Ora	57	18.4/20.9	179	856

REGISTERED CIVIL ENGINEER — 06/15/09 DATE

THOMAS M. IONTA No. C45818 Exp. 12-31-10 CIVIL — REGISTERED PROFESSIONAL ENGINEER — STATE OF CALIFORNIA

1-25-10
PLANS APPROVAL DATE

THE STATE OF CALIFORNIA OR ITS OFFICERS OR AGENTS SHALL NOT BE RESPONSIBLE FOR THE ACCURACY OR COMPLETENESS OF SCANNED COPIES OF THIS PLAN SHEET.

CH2M HILL
6 HUTTON CENTRE DRIVE,
SUITE 700
SANTA ANA, CA 92707

OCTA
550 S. MAIN STREET
ORANGE, CA 92863

REVISED BY | DATE REVISED

RYAN MITRY | MIKE ROBINSON

CALCULATED-DESIGNED BY | CHECKED BY

CONSULTANT FUNCTIONAL SUPERVISOR: THOMAS IONTA

STATE OF CALIFORNIA - DEPARTMENT OF TRANSPORTATION

Caltrans

NOTES:

1. FOR COMPLETE RIGHT OF WAY AND ACCURATE ACCESS DATA, SEE RIGHT OF WAY RECORD MAPS AT DISTRICT OFFICE.
2. FOR LEGEND AND NOTES SEE SHEET SC-10.

CURVE DATA

No.	R	Δ	T	L
(4)	2061.00′	28°18′09"	519.65′	1018.07′
(5)	2211.00′	9°22′00"	181.13′	361.46′
(9)	1214.00′	17°41′11"	188.87′	374.74′
(10)	1414.00′	9°56′11"	122.92′	245.22′

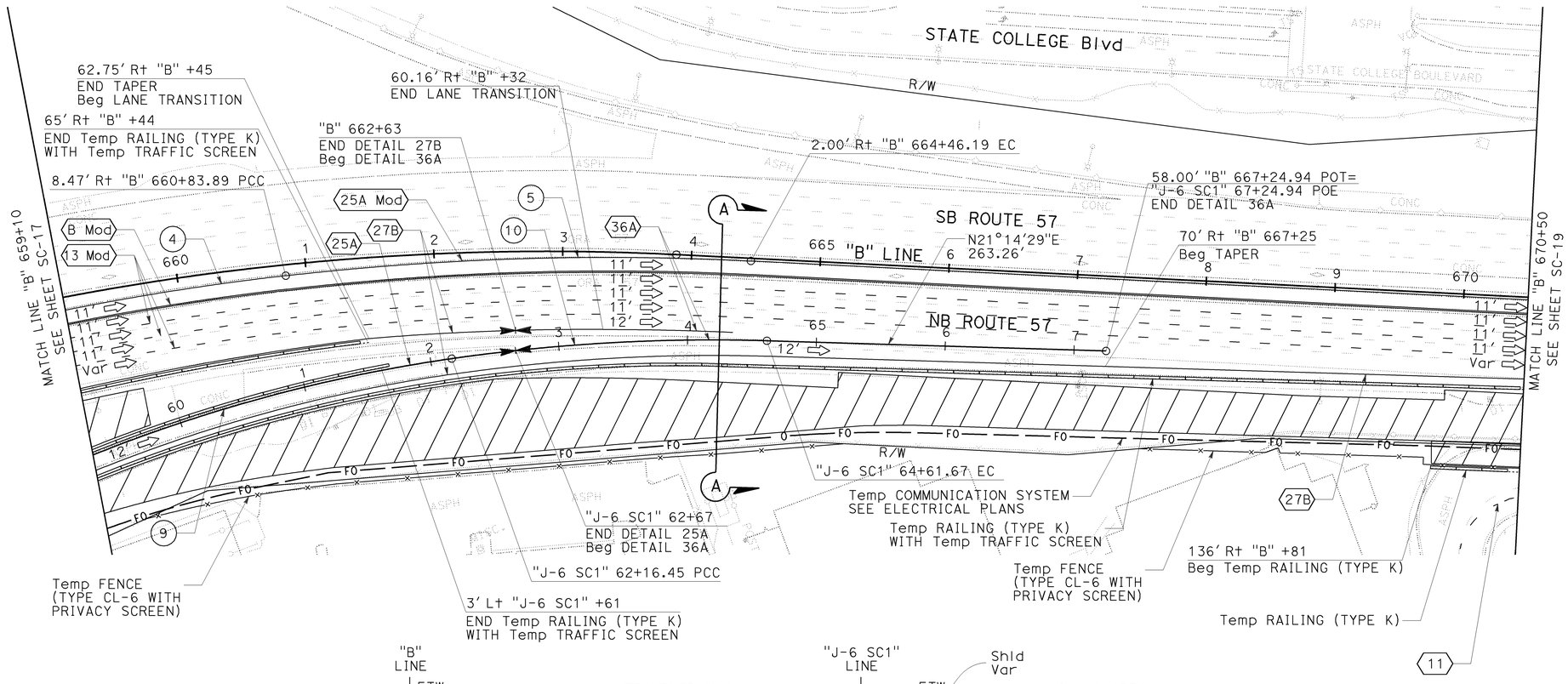

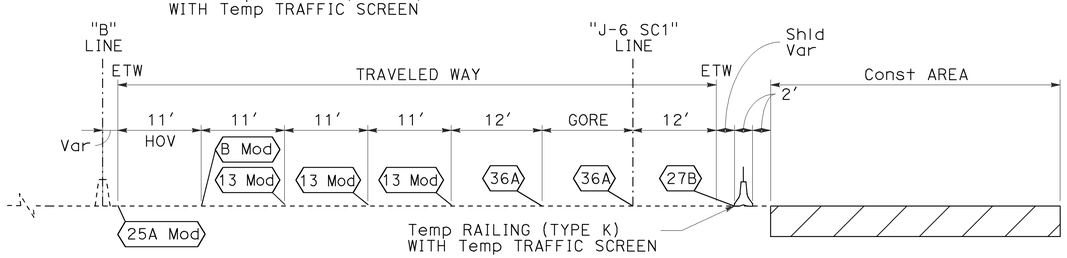

SECTION A-A
NO SCALE

THIS PLAN ACCURATE FOR STAGE CONSTRUCTION AND TRAFFIC HANDLING WORK ONLY

STAGE 1
STAGE CONSTRUCTION AND TRAFFIC HANDLING PLAN

SCALE: 1" = 50′

SC-18

LAST REVISION | DATE PLOTTED => 25-JAN-2010
00-00-00 | TIME PLOTTED => 09:00

BORDER LAST REVISED 4/11/2008

RELATIVE BORDER SCALE IS IN INCHES 0 1 2 3

USERNAME => trcarol
DGN FILE => c0F032ma018.dgn

CU 12220

EA 0F0321

NOTES:

1. FOR COMPLETE RIGHT OF WAY AND ACCURATE ACCESS DATA, SEE RIGHT OF WAY RECORD MAPS AT DISTRICT OFFICE.
2. FOR LEGEND AND NOTES SEE SHEET SC-10.

Dist	COUNTY	ROUTE	POST MILES TOTAL PROJECT	SHEET No.	TOTAL SHEETS
12	Ora	57	18.4/20.9	180	856

REGISTERED CIVIL ENGINEER — 06/15/09 DATE

THOMAS M. IONTA No. C45818 Exp. 12-31-10 CIVIL — REGISTERED PROFESSIONAL ENGINEER — STATE OF CALIFORNIA

1-25-10
PLANS APPROVAL DATE

THE STATE OF CALIFORNIA OR ITS OFFICERS OR AGENTS SHALL NOT BE RESPONSIBLE FOR THE ACCURACY OR COMPLETENESS OF SCANNED COPIES OF THIS PLAN SHEET.

CH2M HILL
6 HUTTON CENTRE DRIVE,
SUITE 700
SANTA ANA, CA 92707

OCTA
550 S. MAIN STREET
ORANGE, CA 92863

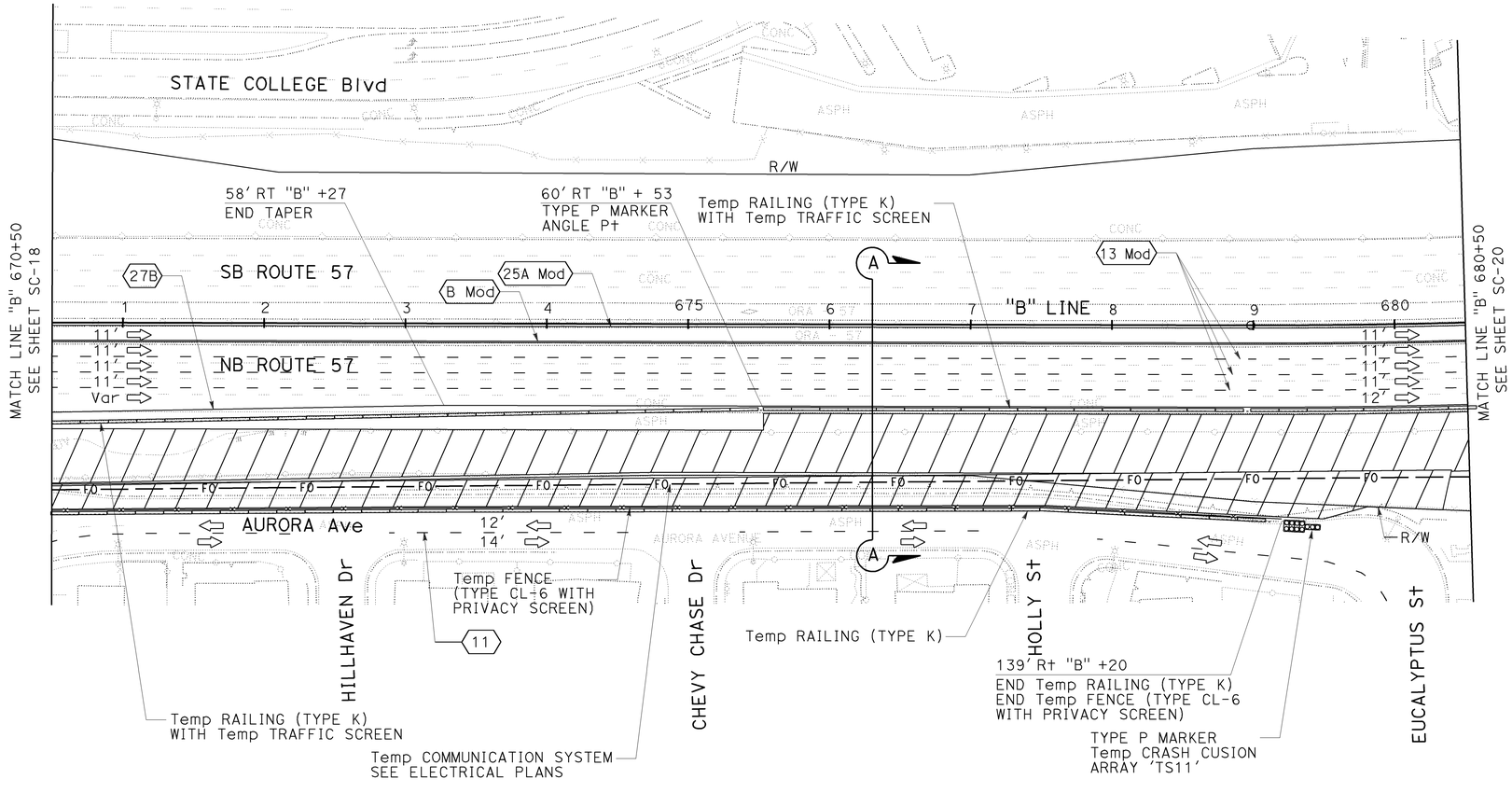

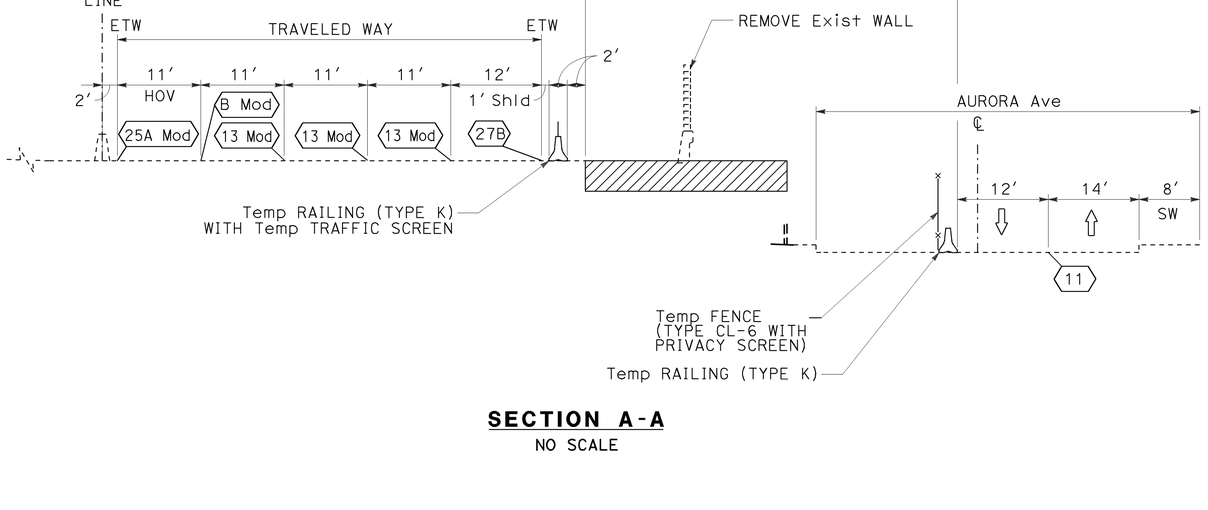

SECTION A-A
NO SCALE

THIS PLAN ACCURATE FOR STAGE CONSTRUCTION AND TRAFFIC HANDLING WORK ONLY

STAGE 1
STAGE CONSTRUCTION AND TRAFFIC HANDLING PLAN

SCALE: 1" = 50'

SC-19

LAST REVISION | DATE PLOTTED => 25-JAN-2010
00-00-00 | TIME PLOTTED => 09:00

REVISED BY | DATE REVISED
RYAN MITRY | MIKE ROBINSON
CALCULATED-DESIGNED BY | CHECKED BY
CONSULTANT FUNCTIONAL SUPERVISOR | THOMAS IONTA
STATE OF CALIFORNIA - DEPARTMENT OF TRANSPORTATION | Caltrans

BORDER LAST REVISED 4/11/2008
RELATIVE BORDER SCALE IS IN INCHES 0 1 2 3
USERNAME => trcarol
DGN FILE => c0F032ma019.dgn
CU 12220
EA 0F0321

Dist	COUNTY	ROUTE	POST MILES TOTAL PROJECT	SHEET No.	TOTAL SHEETS
12	Ora	57	18.4/20.9	181	856

REGISTERED CIVIL ENGINEER — 06/15/09 DATE

1-25-10
PLANS APPROVAL DATE

THOMAS M. IONTA No. C45818 Exp. 12-31-10 CIVIL — REGISTERED PROFESSIONAL ENGINEER — STATE OF CALIFORNIA

THE STATE OF CALIFORNIA OR ITS OFFICERS OR AGENTS SHALL NOT BE RESPONSIBLE FOR THE ACCURACY OR COMPLETENESS OF SCANNED COPIES OF THIS PLAN SHEET.

CH2M HILL
6 HUTTON CENTRE DRIVE,
SUITE 700
SANTA ANA, CA 92707

OCTA
550 S. MAIN STREET
ORANGE, CA 92863

NOTES:

1. FOR COMPLETE RIGHT OF WAY AND ACCURATE ACCESS DATA, SEE RIGHT OF WAY RECORD MAPS AT DISTRICT OFFICE.
2. FOR LEGEND AND NOTES SEE SHEET SC-10.

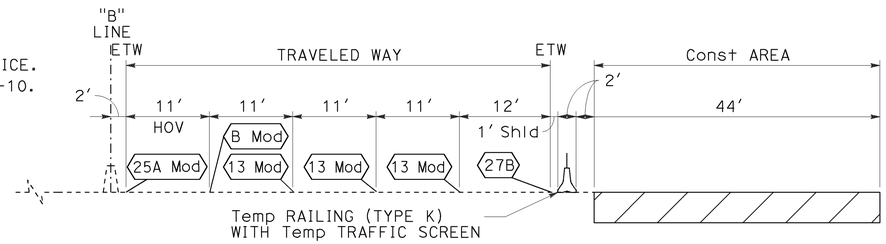

SECTION A-A

NO SCALE

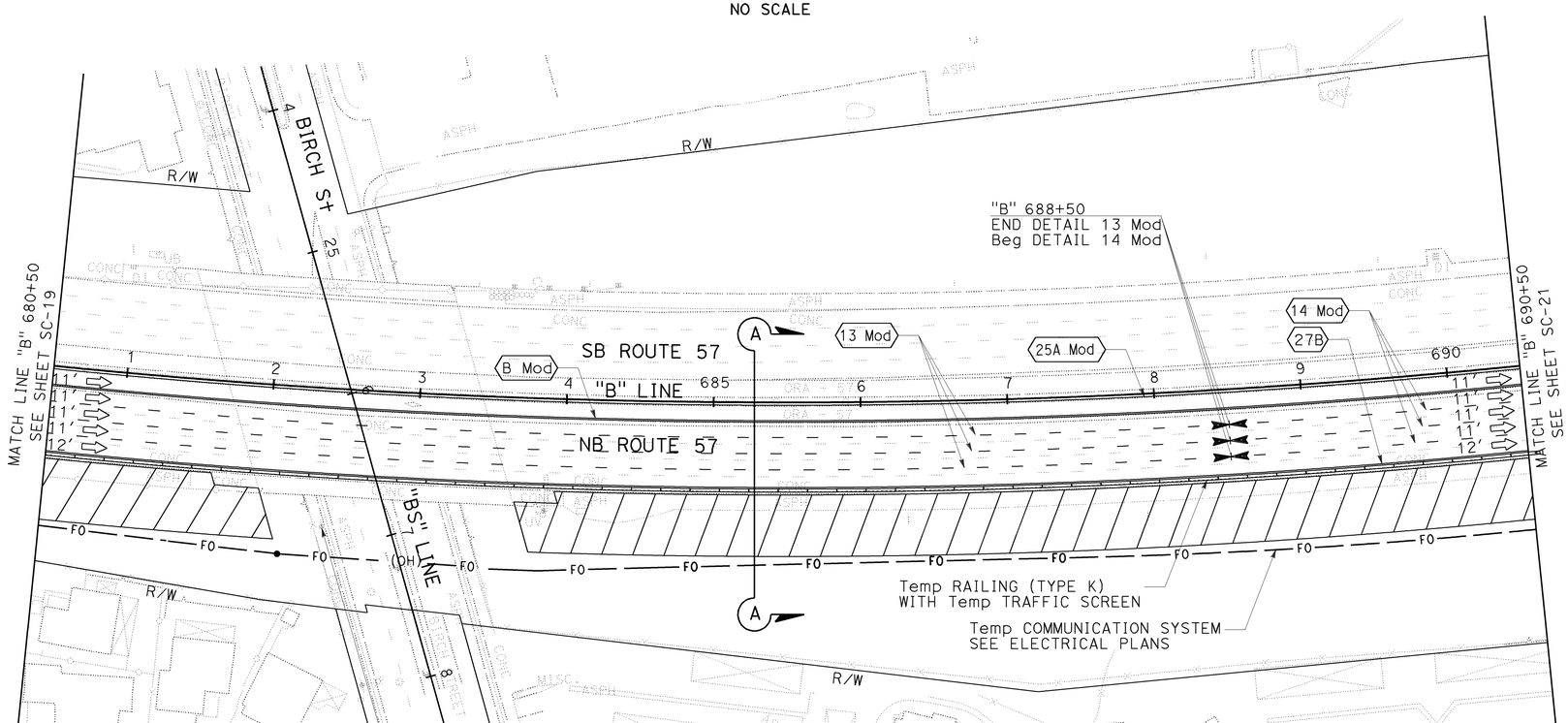

EXISTING SCE POLE TO REMAIN IN STAGE 1. CONTRACTOR SHALL CONSTRUCT ABUTMENT AND PROTECT IN PLACE THE EXISTING SCE POLE DURING STAGE 1. SCE POLE WILL BE RELOCATED BY OTHERS PRIOR TO STAGE 2, PHASE 2 WORK.

THIS PLAN ACCURATE FOR STAGE CONSTRUCTION AND TRAFFIC HANDLING WORK ONLY

STAGE 1
STAGE CONSTRUCTION AND TRAFFIC HANDLING PLAN

SCALE: 1" = 50'

SC-20

REVISED BY | DATE REVISED
RYAN MITRY | MIKE ROBINSON
CALCULATED-DESIGNED BY | CHECKED BY
CONSULTANT FUNCTIONAL SUPERVISOR: THOMAS IONTA
STATE OF CALIFORNIA - DEPARTMENT OF TRANSPORTATION — Caltrans

LAST REVISION | DATE PLOTTED => 25-JAN-2010
00-00-00 | TIME PLOTTED => 09:00

BORDER LAST REVISED 4/11/2008 | RELATIVE BORDER SCALE IS IN INCHES 0 1 2 3 | USERNAME => trcarol | DGN FILE => c0F032ma020.dgn | CU 12220 | EA 0F0321

Dist	COUNTY	ROUTE	POST MILES TOTAL PROJECT	SHEET No.	TOTAL SHEETS
12	Ora	57	18.4/20.9	182	856

REGISTERED CIVIL ENGINEER — 06/15/09 DATE

1-25-10
PLANS APPROVAL DATE

REGISTERED PROFESSIONAL ENGINEER — THOMAS M. IONTA — No. C45818 — Exp. 12-31-10 — CIVIL — STATE OF CALIFORNIA

THE STATE OF CALIFORNIA OR ITS OFFICERS OR AGENTS SHALL NOT BE RESPONSIBLE FOR THE ACCURACY OR COMPLETENESS OF SCANNED COPIES OF THIS PLAN SHEET.

CH2M HILL
6 HUTTON CENTRE DRIVE,
SUITE 700
SANTA ANA, CA 92707

OCTA
550 S. MAIN STREET
ORANGE, CA 92863

NOTES:

1. FOR COMPLETE RIGHT OF WAY AND ACCURATE ACCESS DATA, SEE RIGHT OF WAY RECORD MAPS AT DISTRICT OFFICE.
2. FOR LEGEND AND NOTES SEE SHEET SC-10.
3. ACCESS GATES ARE FOR CONTRACTOR, CITY AND EMERGENCY VEHICLE ACCESS ONLY, NOT FOR PUBLIC ACCESS. CONTRACTOR SHALL HAVE GATES LOCKED AT ALL TIMES. ALTERNATIVE CONTRACTOR ACCESS IS FROM LAMBERT ROAD ALONG THE EXISTING ACCESS ROAD LOCATED ALONG THE EAST SIDE OF THE NB OFF- RAMP TO LAMBERT ROAD.

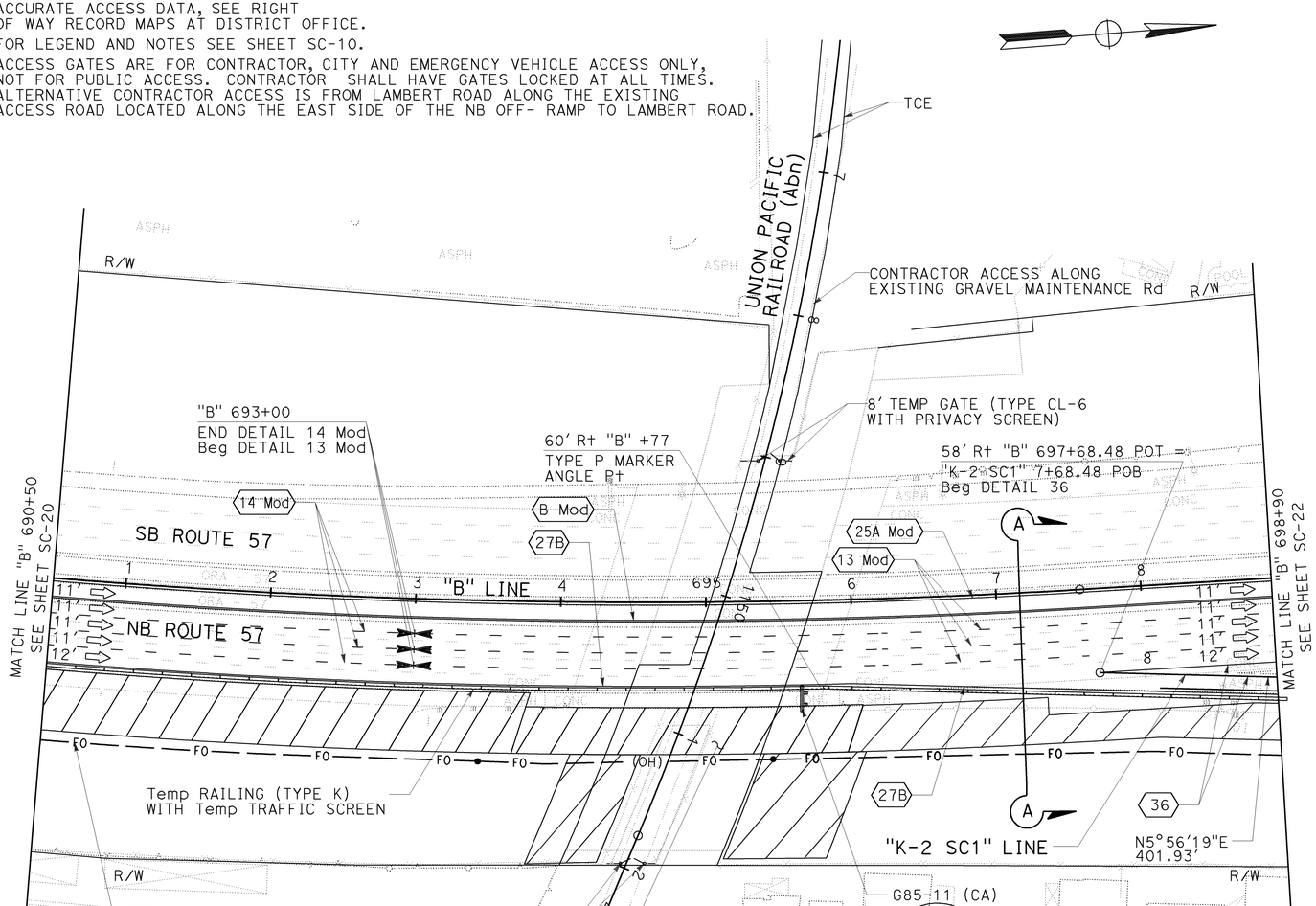

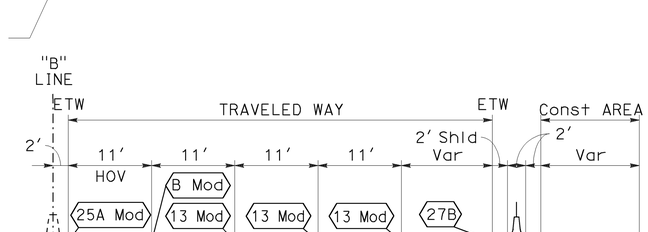

SECTION A-A
NO SCALE

THIS PLAN ACCURATE FOR STAGE CONSTRUCTION AND TRAFFIC HANDLING WORK ONLY

STAGE 1
STAGE CONSTRUCTION AND TRAFFIC HANDLING PLAN
SCALE: 1" = 50'

SC-21

STATE OF CALIFORNIA - DEPARTMENT OF TRANSPORTATION
Caltrans
CONSULTANT FUNCTIONAL SUPERVISOR: THOMAS IONTA
CALCULATED-DESIGNED BY: RYAN MITRY
CHECKED BY: MIKE ROBINSON
REVISED BY | DATE REVISED

LAST REVISION | DATE PLOTTED => 25-JAN-2010
00-00-00 | TIME PLOTTED => 09:01

BORDER LAST REVISED 4/11/2008
RELATIVE BORDER SCALE IS IN INCHES 0 1 2 3
USERNAME => trcarol
DGN FILE => c0F032ma021.dgn
CU 12220
EA 0F0321

Dist	COUNTY	ROUTE	POST MILES TOTAL PROJECT	SHEET No.	TOTAL SHEETS
12	Ora	57	18.4/20.9	183	856

REGISTERED CIVIL ENGINEER — 06/15/09 DATE

1-25-10 PLANS APPROVAL DATE

REGISTERED PROFESSIONAL ENGINEER — THOMAS M. IONTA — No. C45818 — Exp. 12-31-10 — CIVIL — STATE OF CALIFORNIA

THE STATE OF CALIFORNIA OR ITS OFFICERS OR AGENTS SHALL NOT BE RESPONSIBLE FOR THE ACCURACY OR COMPLETENESS OF SCANNED COPIES OF THIS PLAN SHEET.

CH2M HILL
6 HUTTON CENTRE DRIVE,
SUITE 700
SANTA ANA, CA 92707

OCTA
550 S. MAIN STREET
ORANGE, CA 92863

NOTES:

1. FOR COMPLETE RIGHT OF WAY AND ACCURATE ACCESS DATA, SEE RIGHT OF WAY RECORD MAPS AT DISTRICT OFFICE.
2. FOR LEGEND AND NOTES SEE SHEET SC-10.

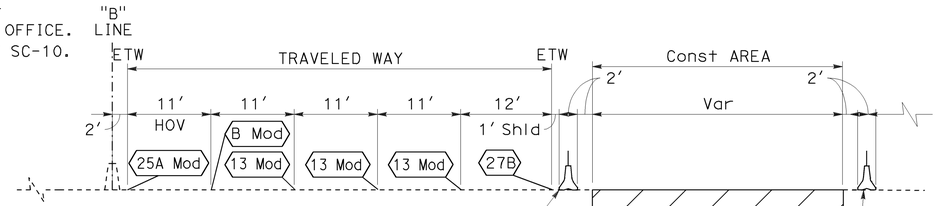

SECTION A-A
NO SCALE

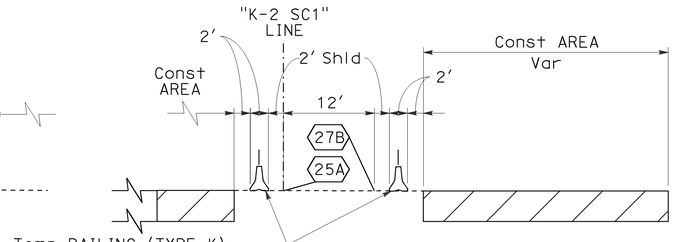

SECTION B-B
NO SCALE

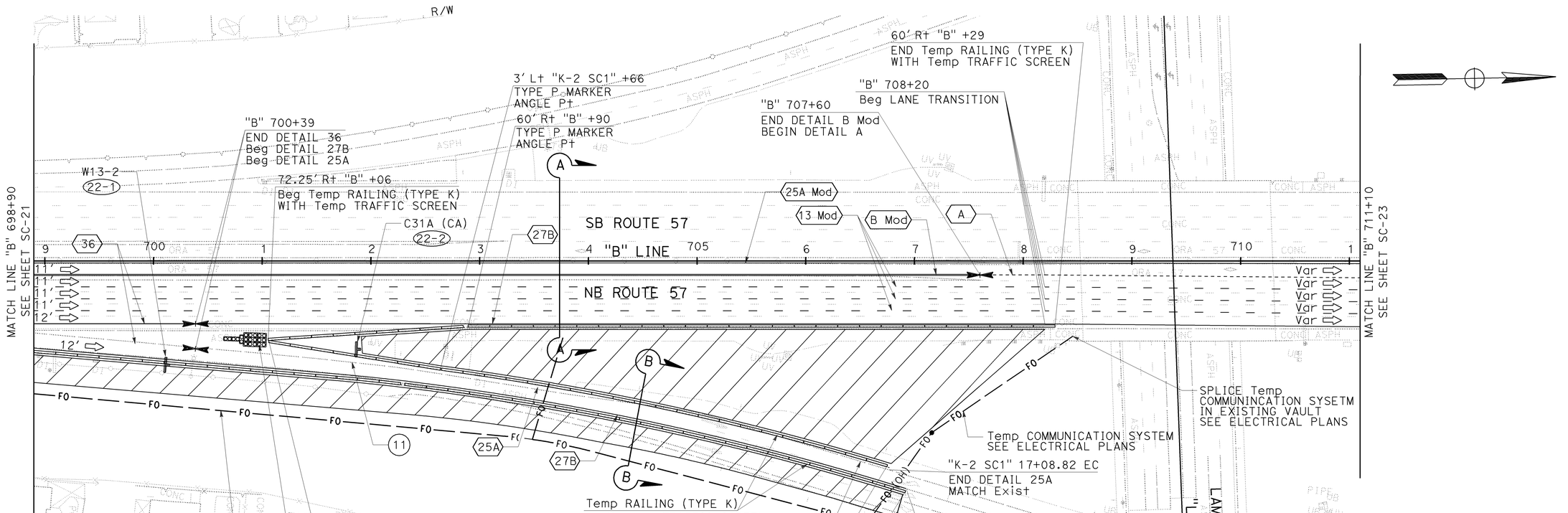

CURVE DATA

No.	R	Δ	T	L
(11)	1811.81'	2°02'01"	32.16'	64.31'
(12)	2600.00'	10°26'52"	237.71'	474.10'

THIS PLAN ACCURATE FOR STAGE CONSTRUCTION AND TRAFFIC HANDLING WORK ONLY

STAGE 1
STAGE CONSTRUCTION AND TRAFFIC HANDLING PLAN

SCALE: 1" = 50'

SC-22

LAST REVISION | DATE PLOTTED => 25-JAN-2010
00-00-00 | TIME PLOTTED => 09:01

REVISED BY | DATE REVISED
RYAN MITRY | MIKE ROBINSON
CALCULATED-DESIGNED BY | CHECKED BY
CONSULTANT FUNCTIONAL SUPERVISOR
THOMAS IONTA

STATE OF CALIFORNIA - DEPARTMENT OF TRANSPORTATION
Caltrans

BORDER LAST REVISED 4/11/2008

RELATIVE BORDER SCALE IS IN INCHES 0 1 2 3

USERNAME => trcarol
DGN FILE => c0F032ma022.dgn

CU 12220

EA 0F0321

Dist	COUNTY	ROUTE	POST MILES TOTAL PROJECT	SHEET No.	TOTAL SHEETS
12	Ora	57	18.4/20.9	184	856

REGISTERED CIVIL ENGINEER — 06/15/09 DATE

THOMAS M. IONTA No. C45818 Exp. 12-31-10 CIVIL — REGISTERED PROFESSIONAL ENGINEER — STATE OF CALIFORNIA

1-25-10
PLANS APPROVAL DATE

THE STATE OF CALIFORNIA OR ITS OFFICERS OR AGENTS SHALL NOT BE RESPONSIBLE FOR THE ACCURACY OR COMPLETENESS OF SCANNED COPIES OF THIS PLAN SHEET.

CH2M HILL
6 HUTTON CENTRE DRIVE,
SUITE 700
SANTA ANA, CA 92707

OCTA
550 S. MAIN STREET
ORANGE, CA 92863

NOTES:

1. FOR COMPLETE RIGHT OF WAY AND ACCURATE ACCESS DATA, SEE RIGHT OF WAY RECORD MAPS AT DISTRICT OFFICE.
2. FOR LEGEND AND NOTES SEE SHEET SC-10.

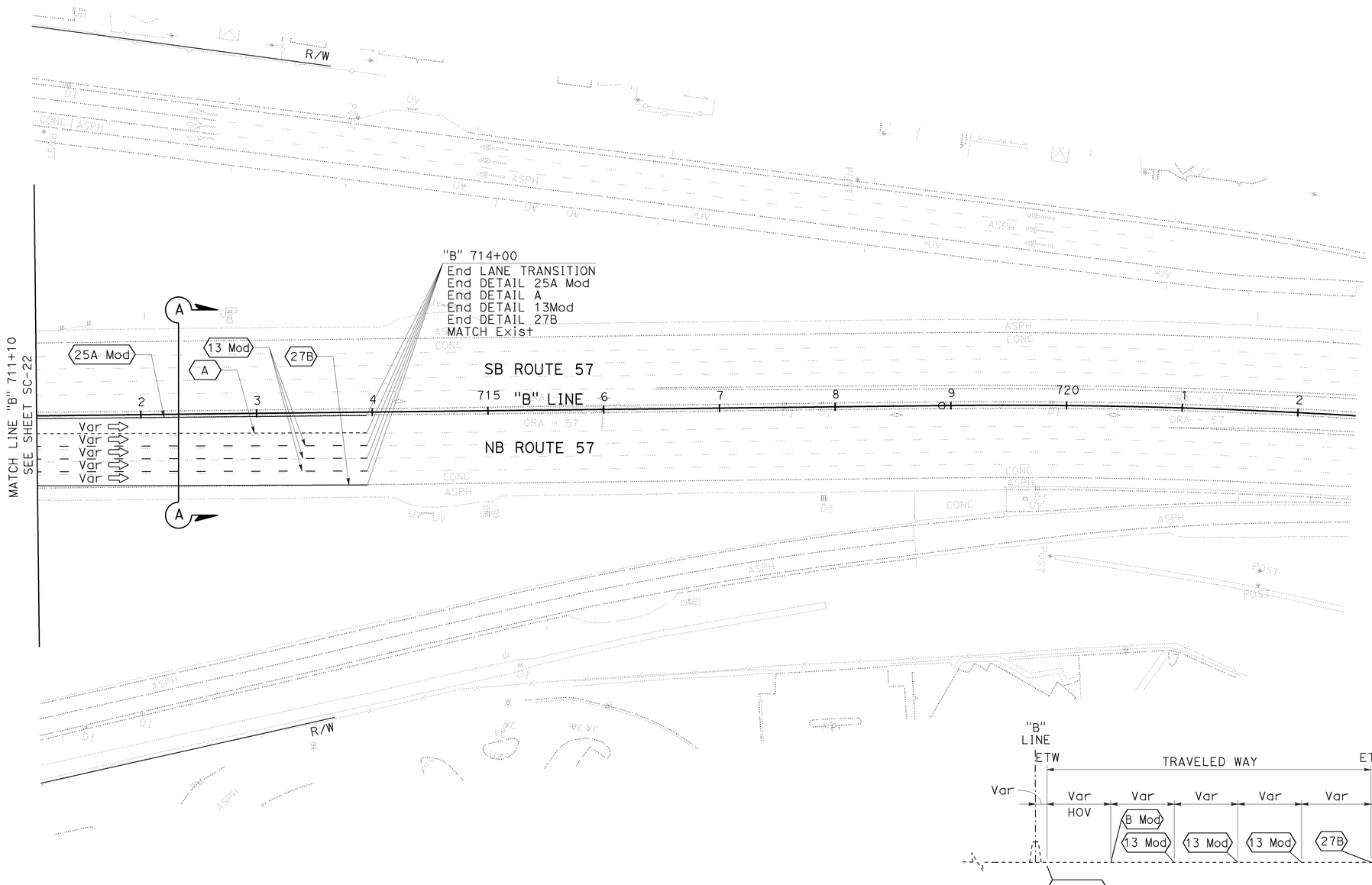

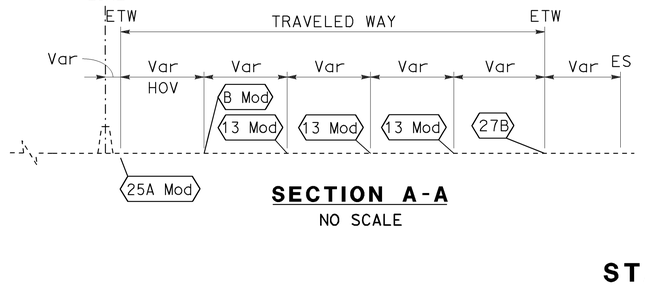

SECTION A-A
NO SCALE

STAGE 1
STAGE CONSTRUCTION AND TRAFFIC HANDLING PLAN

SCALE: 1′ = 50′

SC-23

THIS PLAN ACCURATE FOR STAGE CONSTRUCTION AND TRAFFIC HANDLING WORK ONLY

REVISED BY | DATE REVISED
CALCULATED-DESIGNED BY: RYAN MITRY
CHECKED BY: MIKE ROBINSON
CONSULTANT FUNCTIONAL SUPERVISOR: THOMAS IONTA
STATE OF CALIFORNIA - DEPARTMENT OF TRANSPORTATION
Caltrans

LAST REVISION DATE PLOTTED => 25-JAN-2010
00-00-00 TIME PLOTTED => 09:01

BORDER LAST REVISED 4/11/2008
RELATIVE BORDER SCALE IS IN INCHES 0 1 2 3
USERNAME => trcarol
DGN FILE => c0F032ma023.dgn
CU 12220
EA 0F0321

Dist	COUNTY	ROUTE	POST MILES TOTAL PROJECT	SHEET No.	TOTAL SHEETS
12	Ora	57	18.4/20.9	185	856

REGISTERED CIVIL ENGINEER — 11-16-09 DATE

THOMAS M. IONTA No. C45818 Exp. 12-31-10 CIVIL — REGISTERED PROFESSIONAL ENGINEER — STATE OF CALIFORNIA

1-25-10
PLANS APPROVAL DATE

THE STATE OF CALIFORNIA OR ITS OFFICERS OR AGENTS SHALL NOT BE RESPONSIBLE FOR THE ACCURACY OR COMPLETENESS OF SCANNED COPIES OF THIS PLAN SHEET.

CH2M HILL
6 HUTTON CENTRE DRIVE,
SUITE 700
SANTA ANA, CA 92707

OCTA
550 S. MAIN STREET
ORANGE, CA 92863

NOTES:

1. FOR COMPLETE RIGHT OF WAY AND ACCURATE ACCESS DATA, SEE RIGHT OF WAY RECORD MAPS AT DISTRICT OFFICE.
2. FOR LEGEND AND NOTES SEE SHEET SC-10.

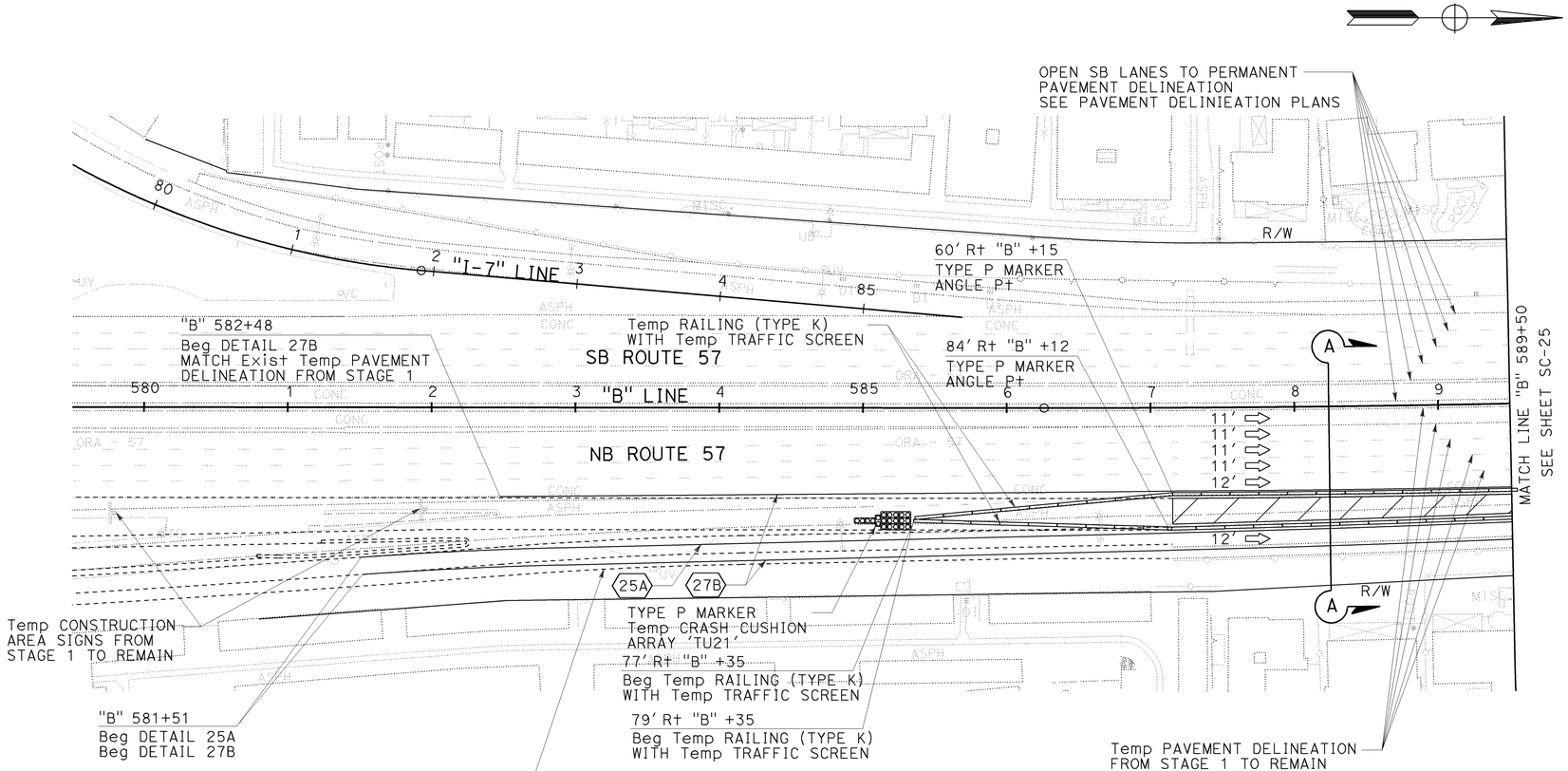

IMPROVEMENTS BY OTHERS IN CONCURRENT PROJECT CONTRACT No. 12-0F0314 COORDINATE STAGING & Temp PAVEMENT DELINEATION

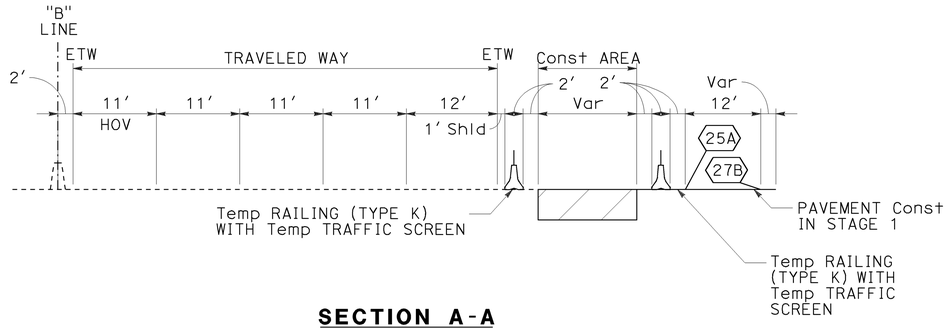

SECTION A-A
NO SCALE

THIS PLAN ACCURATE FOR STAGE CONSTRUCTION AND TRAFFIC HANDLING WORK ONLY

STAGE 2
STAGE CONSTRUCTION AND TRAFFIC HANDLING PLAN

SCALE: 1" = 50'

SC-24

REVISED BY | DATE REVISED
RYAN MITRY | MIKE ROBINSON
CALCULATED-DESIGNED BY | CHECKED BY
CONSULTANT FUNCTIONAL SUPERVISOR: THOMAS IONTA
STATE OF CALIFORNIA - DEPARTMENT OF TRANSPORTATION

LAST REVISION: 00-00-00
DATE PLOTTED => 25-JAN-2010
TIME PLOTTED => 09:10

BORDER LAST REVISED 4/11/2008 | RELATIVE BORDER SCALE IS IN INCHES 0 1 2 3 | USERNAME => trcarol | DGN FILE => c0F032ma024.dgn | CU 12220 | EA 0F0321

Dist	COUNTY	ROUTE	POST MILES TOTAL PROJECT	SHEET No.	TOTAL SHEETS
12	Ora	57	18.4/20.9	186	856

REGISTERED CIVIL ENGINEER — 06/15/09 DATE

1-25-10
PLANS APPROVAL DATE

THOMAS M. IONTA
No. C45818
Exp. 12-31-10
CIVIL
REGISTERED PROFESSIONAL ENGINEER
STATE OF CALIFORNIA

THE STATE OF CALIFORNIA OR ITS OFFICERS OR AGENTS SHALL NOT BE RESPONSIBLE FOR THE ACCURACY OR COMPLETENESS OF SCANNED COPIES OF THIS PLAN SHEET.

CH2M HILL
6 HUTTON CENTRE DRIVE,
SUITE 700
SANTA ANA, CA 92707

OCTA
550 S. MAIN STREET
ORANGE, CA 92863

NOTES:

1. FOR COMPLETE RIGHT OF WAY AND ACCURATE ACCESS DATA, SEE RIGHT OF WAY RECORD MAPS AT DISTRICT OFFICE.
2. FOR LEGEND AND NOTES SEE SHEET SC-10.

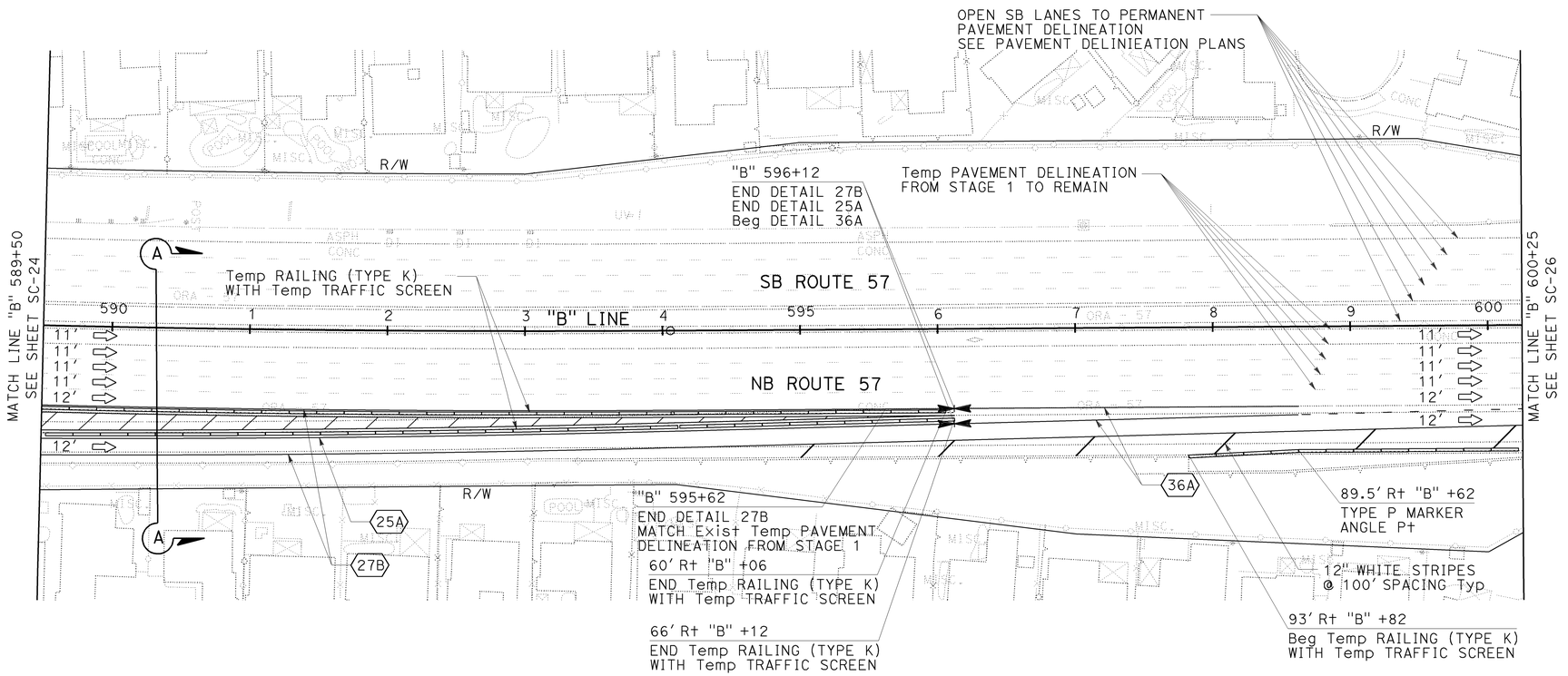

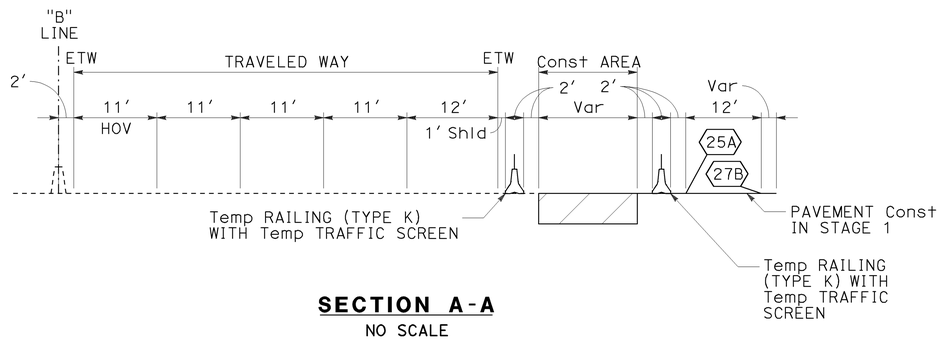

SECTION A-A
NO SCALE

THIS PLAN ACCURATE FOR STAGE CONSTRUCTION AND TRAFFIC HANDLING WORK ONLY

STAGE 2
STAGE CONSTRUCTION AND TRAFFIC HANDLING PLAN

SCALE: 1" = 50′

SC-25

REVISED BY	DATE REVISED

CALCULATED-DESIGNED BY: RYAN MITRY
CHECKED BY: MIKE ROBINSON
CONSULTANT FUNCTIONAL SUPERVISOR: THOMAS IONTA
STATE OF CALIFORNIA - DEPARTMENT OF TRANSPORTATION
Caltrans

LAST REVISION DATE PLOTTED => 25-JAN-2010
TIME PLOTTED => 09:01
00-00-00

BORDER LAST REVISED 4/11/2008
RELATIVE BORDER SCALE IS IN INCHES 0 1 2 3
USERNAME => trcarol
DGN FILE => c0F032ma025.dgn
CU 12220
EA 0F0321

Dist	COUNTY	ROUTE	POST MILES TOTAL PROJECT	SHEET No.	TOTAL SHEETS
12	Ora	57	18.4/20.9	187	856

REGISTERED CIVIL ENGINEER — 06/15/09 DATE

THOMAS M. IONTA No. C45818 Exp. 12-31-10 CIVIL — REGISTERED PROFESSIONAL ENGINEER — STATE OF CALIFORNIA

1-25-10
PLANS APPROVAL DATE

THE STATE OF CALIFORNIA OR ITS OFFICERS OR AGENTS SHALL NOT BE RESPONSIBLE FOR THE ACCURACY OR COMPLETENESS OF SCANNED COPIES OF THIS PLAN SHEET.

CH2M HILL
6 HUTTON CENTRE DRIVE,
SUITE 700
SANTA ANA, CA 92707

OCTA
550 S. MAIN STREET
ORANGE, CA 92863

NOTES:

1. FOR COMPLETE RIGHT OF WAY AND ACCURATE ACCESS DATA, SEE RIGHT OF WAY RECORD MAPS AT DISTRICT OFFICE.
2. FOR LEGEND AND NOTES SEE SHEET SC-10.

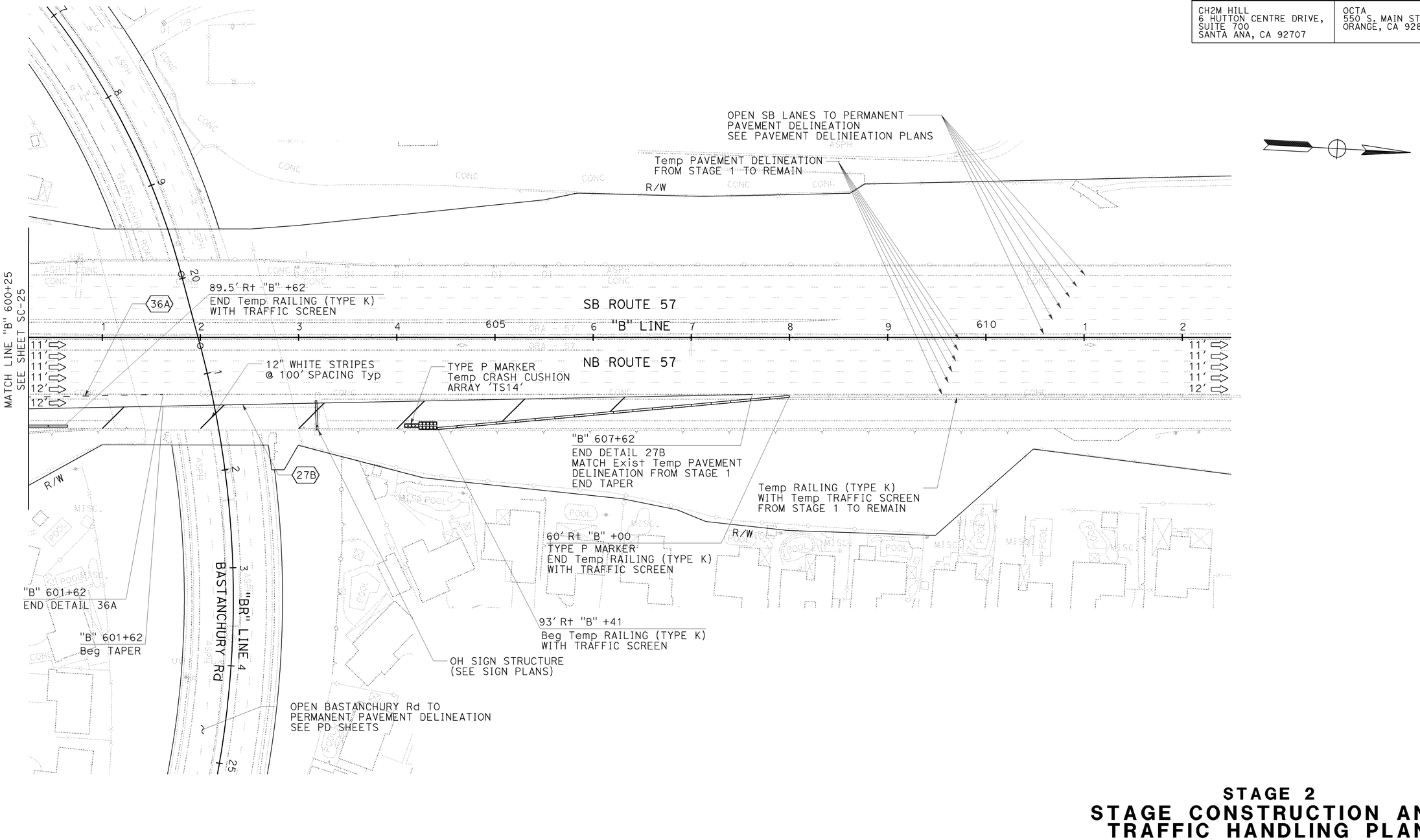

THIS PLAN ACCURATE FOR STAGE CONSTRUCTION AND TRAFFIC HANDLING WORK ONLY

STAGE 2
STAGE CONSTRUCTION AND TRAFFIC HANDLING PLAN

SCALE: 1" = 50'

SC-26

REVISED BY | DATE REVISED
RYAN MITRY | MIKE ROBINSON
CALCULATED-DESIGNED BY | CHECKED BY
CONSULTANT FUNCTIONAL SUPERVISOR: THOMAS IONTA
STATE OF CALIFORNIA - DEPARTMENT OF TRANSPORTATION
Caltrans

LAST REVISION DATE PLOTTED => 25-JAN-2010
00-00-00 TIME PLOTTED => 09:01

BORDER LAST REVISED 4/11/2008 | RELATIVE BORDER SCALE IS IN INCHES 0 1 2 3 | USERNAME => trcarol | DGN FILE => c0F032ma026.dgn | CU 12220 | EA 0F0321

NOTES:

1. FOR COMPLETE RIGHT OF WAY AND ACCURATE ACCESS DATA, SEE RIGHT OF WAY RECORD MAPS AT DISTRICT OFFICE.
2. FOR LEGEND AND NOTES SEE SHEET SC-10.

Dist	COUNTY	ROUTE	POST MILES TOTAL PROJECT	SHEET No.	TOTAL SHEETS
12	Ora	57	18.4/20.9	188	856

REGISTERED CIVIL ENGINEER — 06/15/09 DATE

THOMAS M. IONTA No. C45818 Exp. 12-31-10 CIVIL — REGISTERED PROFESSIONAL ENGINEER — STATE OF CALIFORNIA

1-25-10
PLANS APPROVAL DATE

THE STATE OF CALIFORNIA OR ITS OFFICERS OR AGENTS SHALL NOT BE RESPONSIBLE FOR THE ACCURACY OR COMPLETENESS OF SCANNED COPIES OF THIS PLAN SHEET.

CH2M HILL
6 HUTTON CENTRE DRIVE,
SUITE 700
SANTA ANA, CA 92707

OCTA
550 S. MAIN STREET
ORANGE, CA 92863

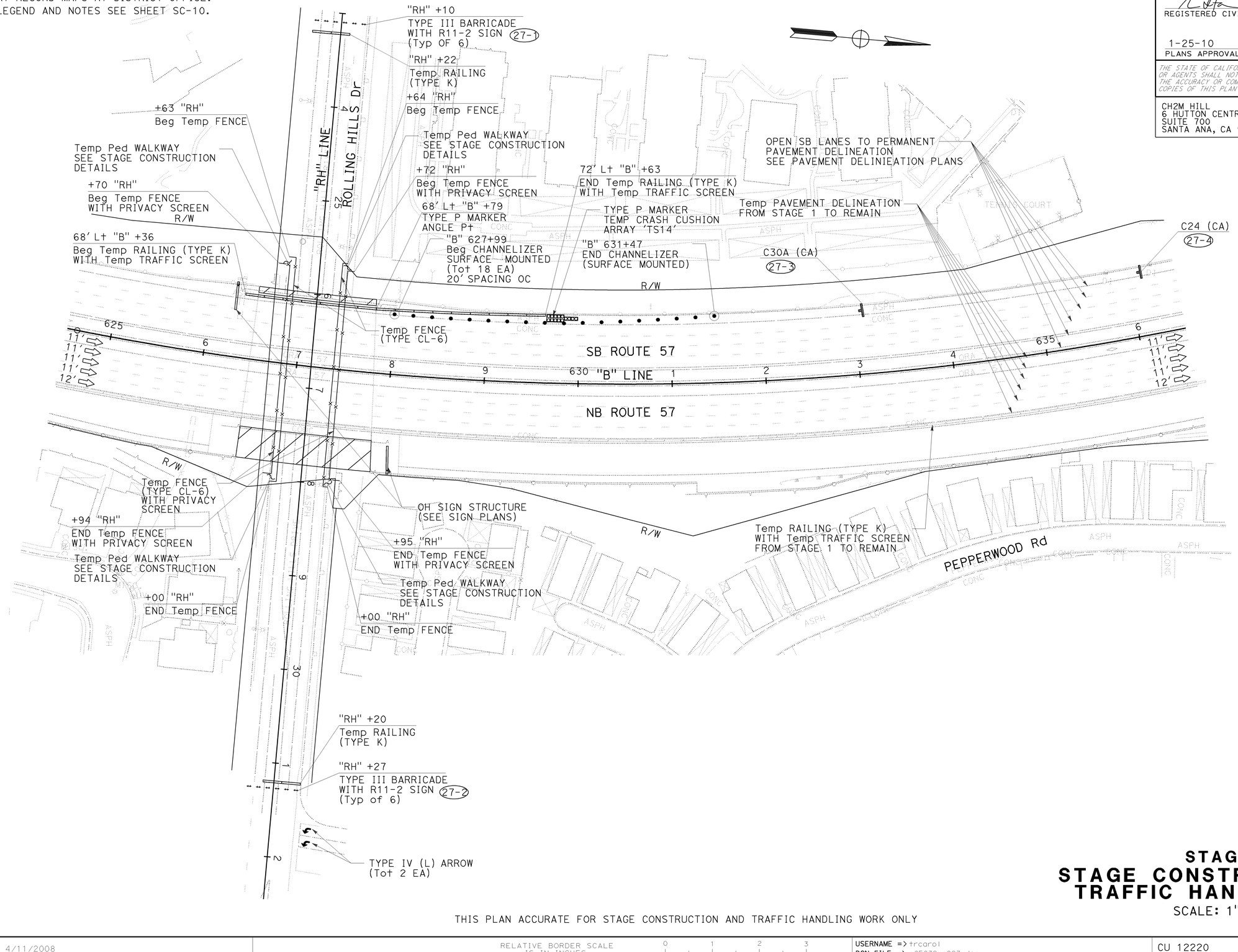

THIS PLAN ACCURATE FOR STAGE CONSTRUCTION AND TRAFFIC HANDLING WORK ONLY

STAGE 2
STAGE CONSTRUCTION AND TRAFFIC HANDLING PLAN

SCALE: 1" = 50'

SC-27

REVISED BY | DATE REVISED
RYAN MITRY | MIKE ROBINSON
CALCULATED-DESIGNED BY | CHECKED BY
CONSULTANT FUNCTIONAL SUPERVISOR: THOMAS IONTA
STATE OF CALIFORNIA - DEPARTMENT OF TRANSPORTATION

LAST REVISION | DATE PLOTTED => 25-JAN-2010
00-00-00 | TIME PLOTTED => 09:01

BORDER LAST REVISED 4/11/2008 | RELATIVE BORDER SCALE IS IN INCHES 0 1 2 3 | USERNAME => trcarol | DGN FILE => c0F032ma027.dgn | CU 12220 | EA 0F0321

Dist	COUNTY	ROUTE	POST MILES TOTAL PROJECT	SHEET No.	TOTAL SHEETS
12	Ora	57	18.4/20.9	189	856

REGISTERED CIVIL ENGINEER — 06/15/09 DATE

1-25-10
PLANS APPROVAL DATE

THOMAS M. IONTA No. C45818 Exp. 12-31-10 CIVIL — REGISTERED PROFESSIONAL ENGINEER — STATE OF CALIFORNIA

THE STATE OF CALIFORNIA OR ITS OFFICERS OR AGENTS SHALL NOT BE RESPONSIBLE FOR THE ACCURACY OR COMPLETENESS OF SCANNED COPIES OF THIS PLAN SHEET.

CH2M HILL
6 HUTTON CENTRE DRIVE,
SUITE 700
SANTA ANA, CA 92707

OCTA
550 S. MAIN STREET
ORANGE, CA 92863

REVISED BY | DATE REVISED

RYAN MITRY | MIKE ROBINSON

CALCULATED-DESIGNED BY | CHECKED BY

THOMAS IONTA

CONSULTANT FUNCTIONAL SUPERVISOR

STATE OF CALIFORNIA - DEPARTMENT OF TRANSPORTATION

Caltrans

NOTES:

1. FOR COMPLETE RIGHT OF WAY AND ACCURATE ACCESS DATA, SEE RIGHT OF WAY RECORD MAPS AT DISTRICT OFFICE.
2. FOR LEGEND AND NOTES SEE SHEET SC-10.

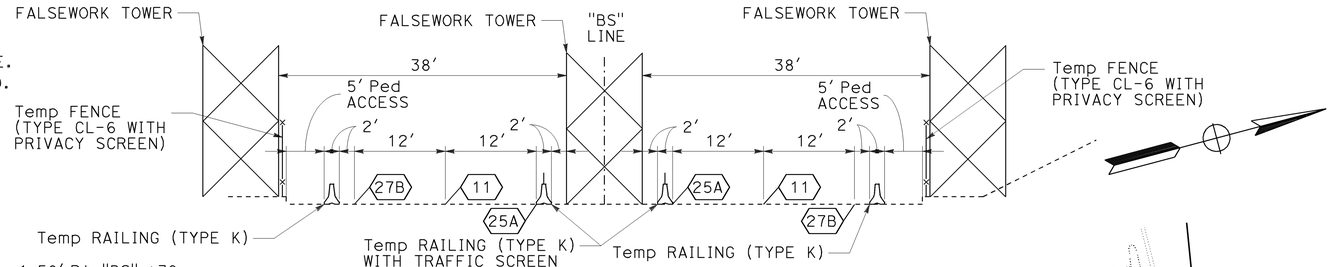

SECTION A-A

NO SCALE

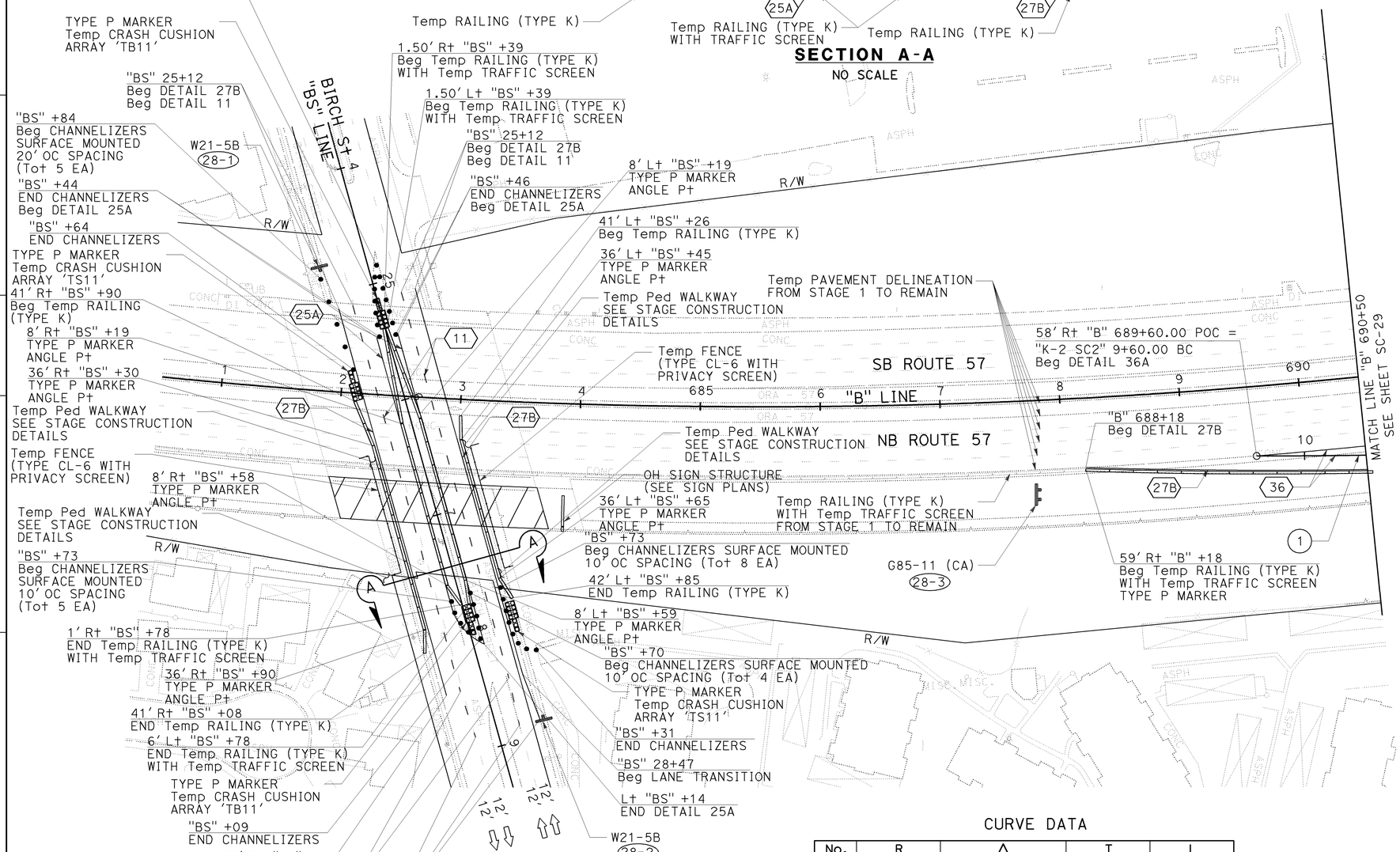

CURVE DATA

No.	R	Δ	T	L
1	5051.95'	3°06'56"	137.39'	274.72'

THIS PLAN ACCURATE FOR STAGE CONSTRUCTION AND TRAFFIC HANDLING WORK ONLY

STAGE 2
STAGE CONSTRUCTION AND TRAFFIC HANDLING PLAN

SCALE: 1" = 50'

SC-28

LAST REVISION DATE PLOTTED => 25-JAN-2010
00-00-00 TIME PLOTTED => 09:02

BORDER LAST REVISED 4/11/2008

RELATIVE BORDER SCALE IS IN INCHES 0 1 2 3

USERNAME => trcarol
DGN FILE => c0F032ma028.dgn

CU 12220

EA 0F0321

Dist	COUNTY	ROUTE	POST MILES TOTAL PROJECT	SHEET No.	TOTAL SHEETS
12	Ora	57	18.4/20.9	190	856

REGISTERED CIVIL ENGINEER — 06/15/09 DATE

THOMAS M. IONTA No. C45818 Exp. 12-31-10 CIVIL — REGISTERED PROFESSIONAL ENGINEER — STATE OF CALIFORNIA

1-25-10
PLANS APPROVAL DATE

THE STATE OF CALIFORNIA OR ITS OFFICERS OR AGENTS SHALL NOT BE RESPONSIBLE FOR THE ACCURACY OR COMPLETENESS OF SCANNED COPIES OF THIS PLAN SHEET.

CH2M HILL
6 HUTTON CENTRE DRIVE,
SUITE 700
SANTA ANA, CA 92707

OCTA
550 S. MAIN STREET
ORANGE, CA 92863

NOTES:

1. FOR COMPLETE RIGHT OF WAY AND ACCURATE ACCESS DATA, SEE RIGHT OF WAY RECORD MAPS AT DISTRICT OFFICE.
2. FOR LEGEND AND NOTES SEE SHEET SC-10.

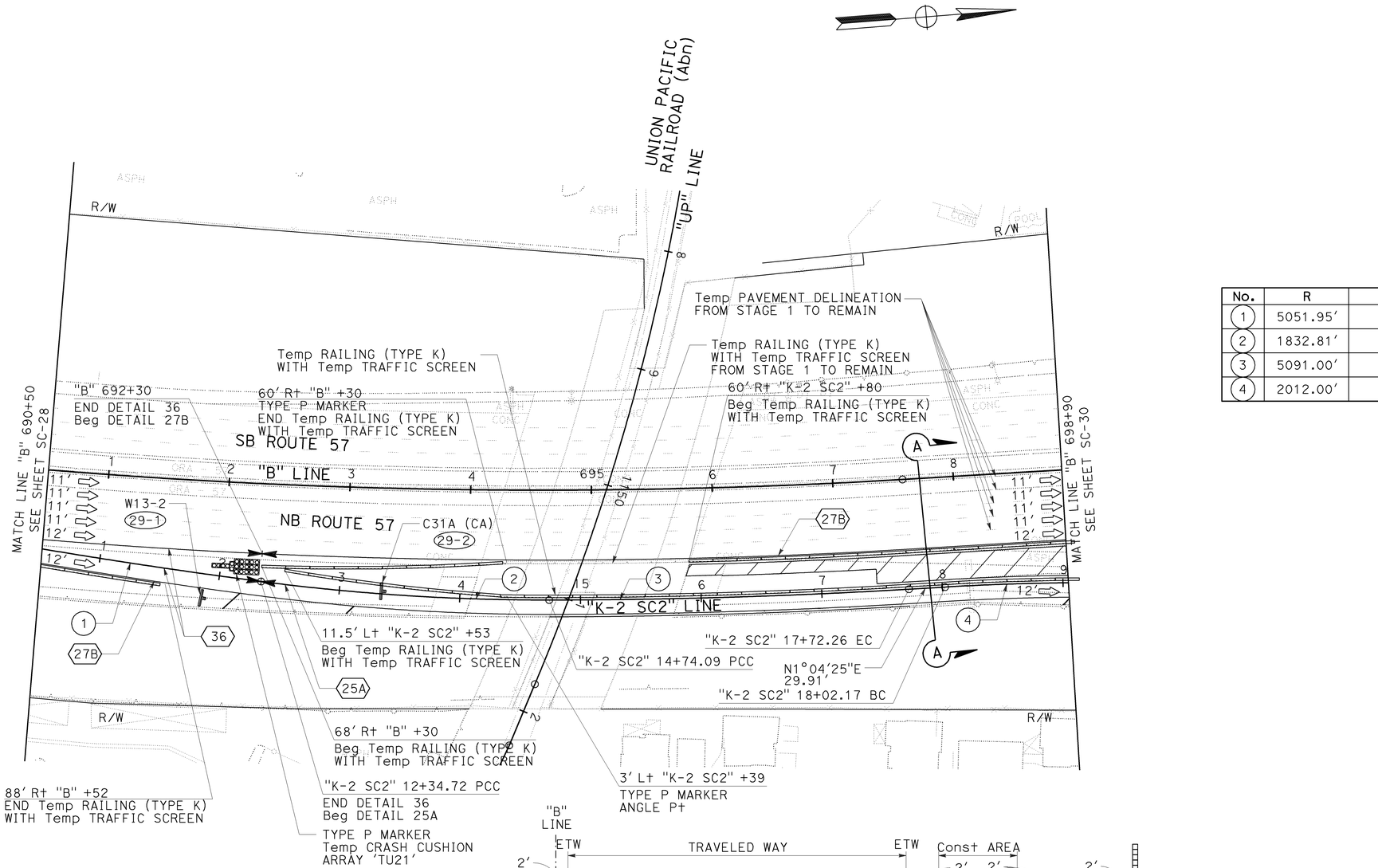

CURVE DATA

No.	R	Δ	T	L
1	5051.95′	3°06′56"	137.39′	274.72′
2	1832.81′	7°29′00"	119.86′	239.38′
3	5091.00′	3°21′20"	149.13′	298.17′
4	2012.00′	4°51′54"	85.47′	170.84′

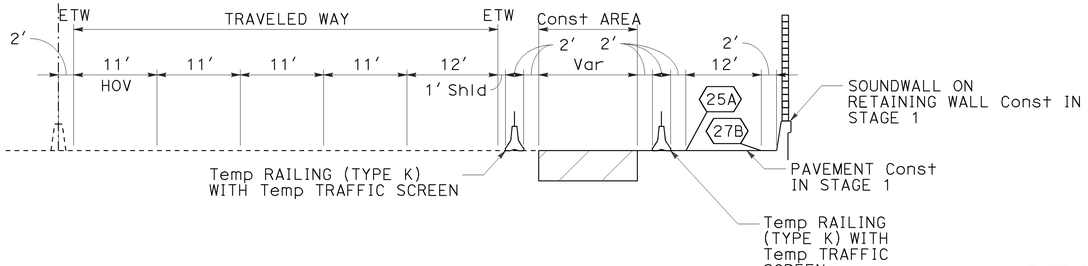

SECTION A-A
NO SCALE

THIS PLAN ACCURATE FOR STAGE CONSTRUCTION AND TRAFFIC HANDLING WORK ONLY

STAGE 2
STAGE CONSTRUCTION AND TRAFFIC HANDLING PLAN

SCALE: 1" = 50′

SC-29

REVISED BY | DATE REVISED
RYAN MITRY | MIKE ROBINSON
CALCULATED-DESIGNED BY | CHECKED BY
THOMAS IONTA
CONSULTANT FUNCTIONAL SUPERVISOR
STATE OF CALIFORNIA - DEPARTMENT OF TRANSPORTATION
Caltrans

LAST REVISION 00-00-00 | DATE PLOTTED => 25-JAN-2010 | TIME PLOTTED => 09:02

BORDER LAST REVISED 4/11/2008 | RELATIVE BORDER SCALE IS IN INCHES 0 1 2 3 | USERNAME => trcarol | DGN FILE => c0F032ma029.dgn | CU 12220 | EA 0F0321

Dist	COUNTY	ROUTE	POST MILES TOTAL PROJECT	SHEET No.	TOTAL SHEETS
12	Ora	57	18.4/20.9	191	856

REGISTERED CIVIL ENGINEER — 06/15/09 DATE

1-25-10 PLANS APPROVAL DATE

THOMAS M. IONTA No. C45818 Exp. 12-31-10 CIVIL — REGISTERED PROFESSIONAL ENGINEER — STATE OF CALIFORNIA

THE STATE OF CALIFORNIA OR ITS OFFICERS OR AGENTS SHALL NOT BE RESPONSIBLE FOR THE ACCURACY OR COMPLETENESS OF SCANNED COPIES OF THIS PLAN SHEET.

CH2M HILL
6 HUTTON CENTRE DRIVE,
SUITE 700
SANTA ANA, CA 92707

OCTA
550 S. MAIN STREET
ORANGE, CA 92863

NOTES:

1. FOR COMPLETE RIGHT OF WAY AND ACCURATE ACCESS DATA, SEE RIGHT OF WAY RECORD MAPS AT DISTRICT OFFICE.
2. FOR LEGEND AND NOTES SEE SHEET SC-10.

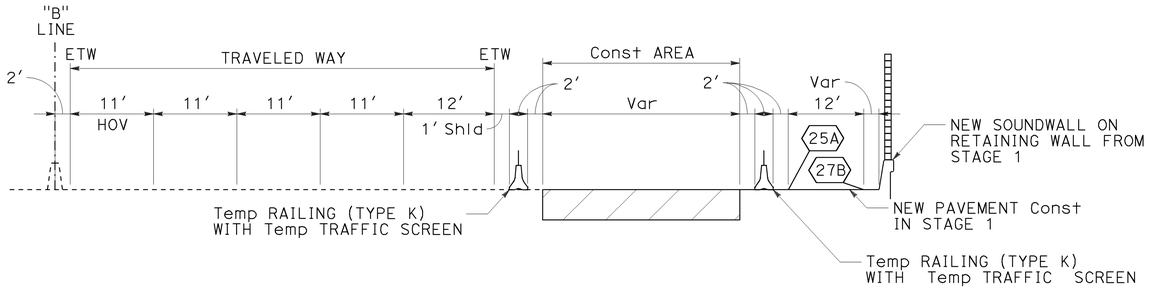

SECTION A-A

NO SCALE

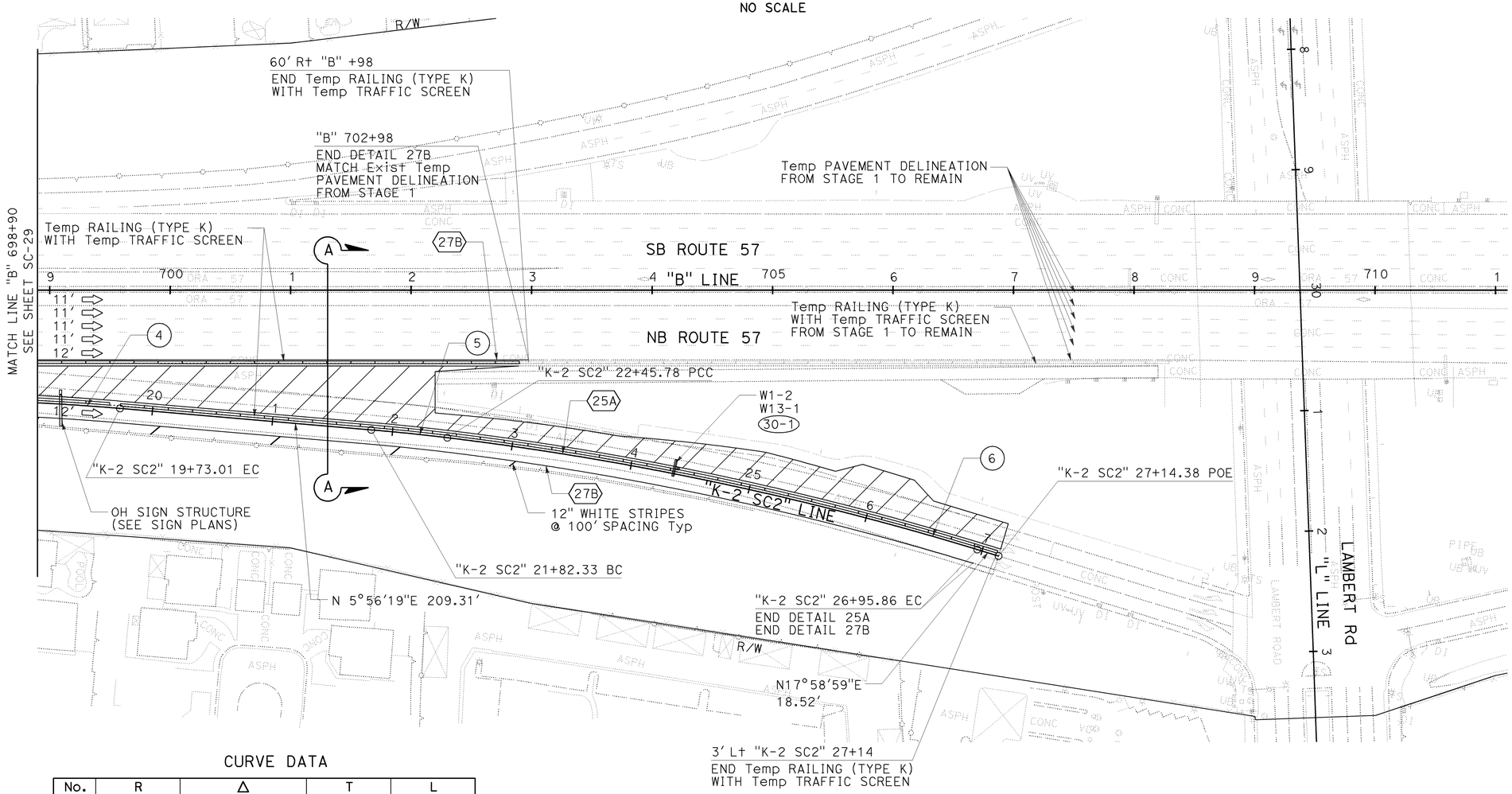

CURVE DATA

No.	R	Δ	T	L
4	2012.00'	4°51'54"	85.47'	170.84'
5	1787.81'	2°02'01"	31.73'	63.46'
6	2576.00'	10°00'39"	225.61'	450.08'

THIS PLAN ACCURATE FOR STAGE CONSTRUCTION AND TRAFFIC HANDLING WORK ONLY

STAGE 2
STAGE CONSTRUCTION AND TRAFFIC HANDLING PLAN

SCALE: 1" = 50'

SC-30

REVISED BY | DATE REVISED
RYAN MITRY | MIKE ROBINSON
CALCULATED-DESIGNED BY | CHECKED BY
THOMAS IONTA
CONSULTANT FUNCTIONAL SUPERVISOR
STATE OF CALIFORNIA - DEPARTMENT OF TRANSPORTATION
Caltrans

LAST REVISION | DATE PLOTTED => 25-JAN-2010
00-00-00 | TIME PLOTTED => 09:02

BORDER LAST REVISED 4/11/2008 | RELATIVE BORDER SCALE IS IN INCHES 0 1 2 3 | USERNAME => trcarol | DGN FILE => c0F032ma030.dgn | CU 12220 | EA 0F0321

Dist	COUNTY	ROUTE	POST MILES TOTAL PROJECT	SHEET No.	TOTAL SHEETS
12	Ora	57	18.4/20.9	192	856

REGISTERED CIVIL ENGINEER — 06/15/09 DATE

THOMAS M. IONTA No. C45818 Exp. 12-31-10 CIVIL — REGISTERED PROFESSIONAL ENGINEER — STATE OF CALIFORNIA

1-25-10
PLANS APPROVAL DATE

THE STATE OF CALIFORNIA OR ITS OFFICERS OR AGENTS SHALL NOT BE RESPONSIBLE FOR THE ACCURACY OR COMPLETENESS OF SCANNED COPIES OF THIS PLAN SHEET.

CH2M HILL
6 HUTTON CENTRE DRIVE,
SUITE 700
SANTA ANA, CA 92707

OCTA
550 S. MAIN STREET
ORANGE, CA 92863

NOTES:

1. FOR COMPLETE RIGHT OF WAY AND ACCURATE ACCESS DATA, SEE RIGHT OF WAY RECORD MAPS AT DISTRICT OFFICE.
2. FOR LEGEND AND NOTES SEE SHEET SC-10.

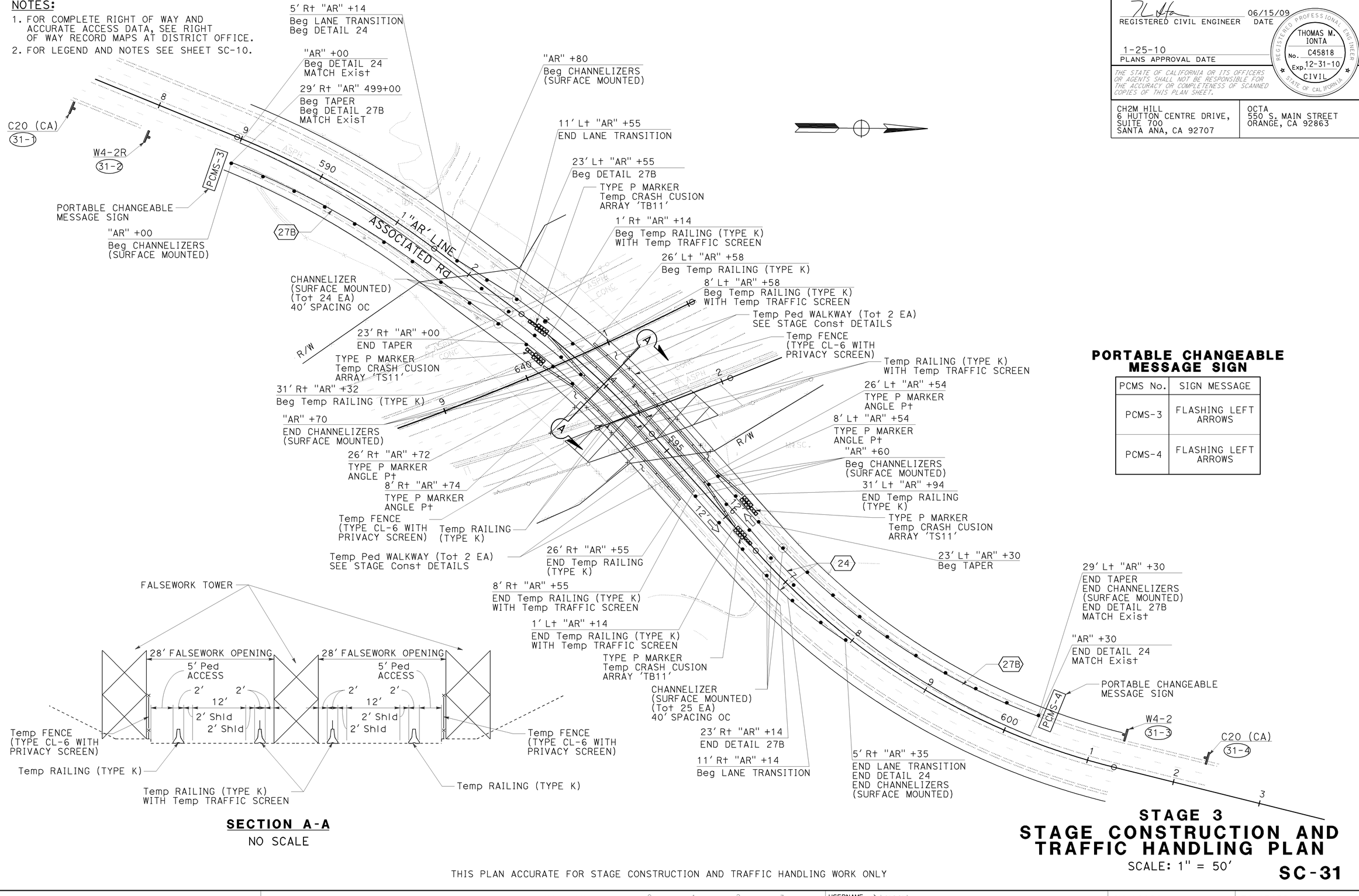

SECTION A-A
NO SCALE

PORTABLE CHANGEABLE MESSAGE SIGN

PCMS No.	SIGN MESSAGE
PCMS-3	FLASHING LEFT ARROWS
PCMS-4	FLASHING LEFT ARROWS

STAGE 3
STAGE CONSTRUCTION AND TRAFFIC HANDLING PLAN

SCALE: 1" = 50'

SC-31

THIS PLAN ACCURATE FOR STAGE CONSTRUCTION AND TRAFFIC HANDLING WORK ONLY

STATE OF CALIFORNIA - DEPARTMENT OF TRANSPORTATION
Caltrans
CONSULTANT FUNCTIONAL SUPERVISOR: THOMAS IONTA
CALCULATED-DESIGNED BY: MIKE ROBINSON
CHECKED BY: RYAN MITRY
REVISED BY | DATE REVISED

LAST REVISION | DATE PLOTTED => 25-JAN-2010
00-00-00 | TIME PLOTTED => 09:02

BORDER LAST REVISED 4/11/2008 | RELATIVE BORDER SCALE IS IN INCHES 0 1 2 3 | USERNAME => trcarol | DGN FILE => c0F032ma031.dgn | CU 12220 | EA 0F0321

Dist	COUNTY	ROUTE	POST MILES TOTAL PROJECT	SHEET No.	TOTAL SHEETS
12	Ora	57	18.4/20.9	193	856

REGISTERED CIVIL ENGINEER — 06/15/09 DATE

THOMAS M. IONTA No. C45818 Exp. 12-31-10 CIVIL — REGISTERED PROFESSIONAL ENGINEER — STATE OF CALIFORNIA

1-25-10
PLANS APPROVAL DATE

THE STATE OF CALIFORNIA OR ITS OFFICERS OR AGENTS SHALL NOT BE RESPONSIBLE FOR THE ACCURACY OR COMPLETENESS OF SCANNED COPIES OF THIS PLAN SHEET.

CH2M HILL
6 HUTTON CENTRE DRIVE,
SUITE 700
SANTA ANA, CA 92707

OCTA
550 S. MAIN STREET
ORANGE, CA 92863

NOTES:

1. FOR COMPLETE RIGHT OF WAY AND ACCURATE ACCESS DATA, SEE RIGHT OF WAY RECORD MAPS AT DISTRICT OFFICE.
2. FOR LEGEND AND NOTES SEE SHEET SC-10.

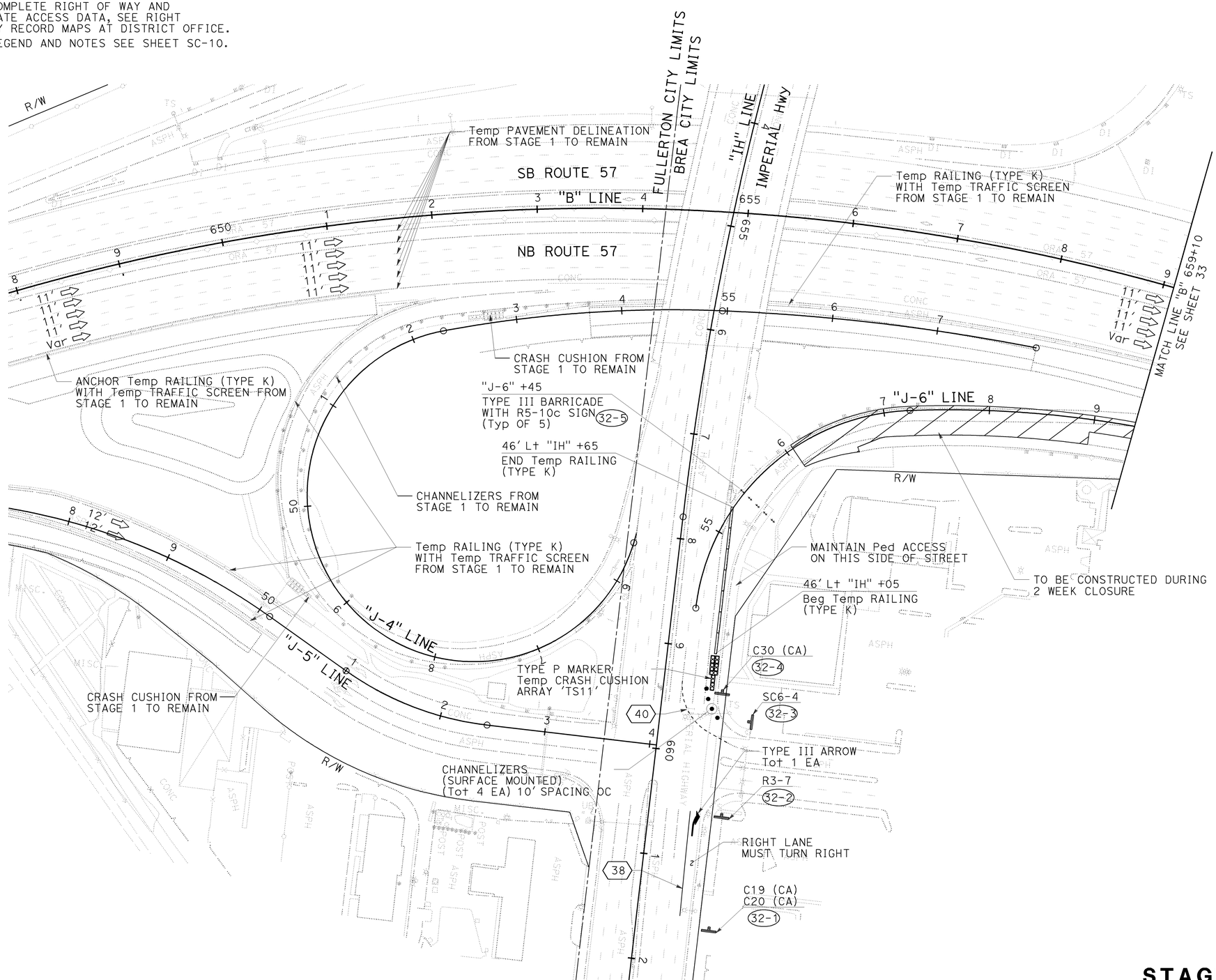

THIS PLAN ACCURATE FOR STAGE CONSTRUCTION AND TRAFFIC HANDLING WORK ONLY

STAGE 3
STAGE CONSTRUCTION AND TRAFFIC HANDLING PLAN

SCALE: 1" = 50'

SC-32

REVISED BY	DATE REVISED
RYAN MITRY	
MIKE ROBINSON	

CALCULATED-DESIGNED BY
CHECKED BY

CONSULTANT FUNCTIONAL SUPERVISOR: THOMAS IONTA

STATE OF CALIFORNIA - DEPARTMENT OF TRANSPORTATION

Caltrans

LAST REVISION | DATE PLOTTED => 25-JAN-2010 | 00-00-00 | TIME PLOTTED => 09:02

BORDER LAST REVISED 4/11/2008

RELATIVE BORDER SCALE IS IN INCHES 0 1 2 3

USERNAME => trcarol
DGN FILE => c0F032ma032.dgn

CU 12220

EA 0F0321

Dist	COUNTY	ROUTE	POST MILES TOTAL PROJECT	SHEET No.	TOTAL SHEETS
12	Ora	57	18.4/20.9	194	856

REGISTERED CIVIL ENGINEER — 06/15/09 DATE

THOMAS M. IONTA No. C45818 Exp. 12-31-10 CIVIL — REGISTERED PROFESSIONAL ENGINEER — STATE OF CALIFORNIA

1-25-10
PLANS APPROVAL DATE

THE STATE OF CALIFORNIA OR ITS OFFICERS OR AGENTS SHALL NOT BE RESPONSIBLE FOR THE ACCURACY OR COMPLETENESS OF SCANNED COPIES OF THIS PLAN SHEET.

CH2M HILL
6 HUTTON CENTRE DRIVE,
SUITE 700
SANTA ANA, CA 92707

OCTA
550 S. MAIN STREET
ORANGE, CA 92863

NOTES:

1. FOR COMPLETE RIGHT OF WAY AND ACCURATE ACCESS DATA, SEE RIGHT OF WAY RECORD MAPS AT DISTRICT OFFICE.
2. FOR LEGEND AND NOTES SEE SHEET SC-10.

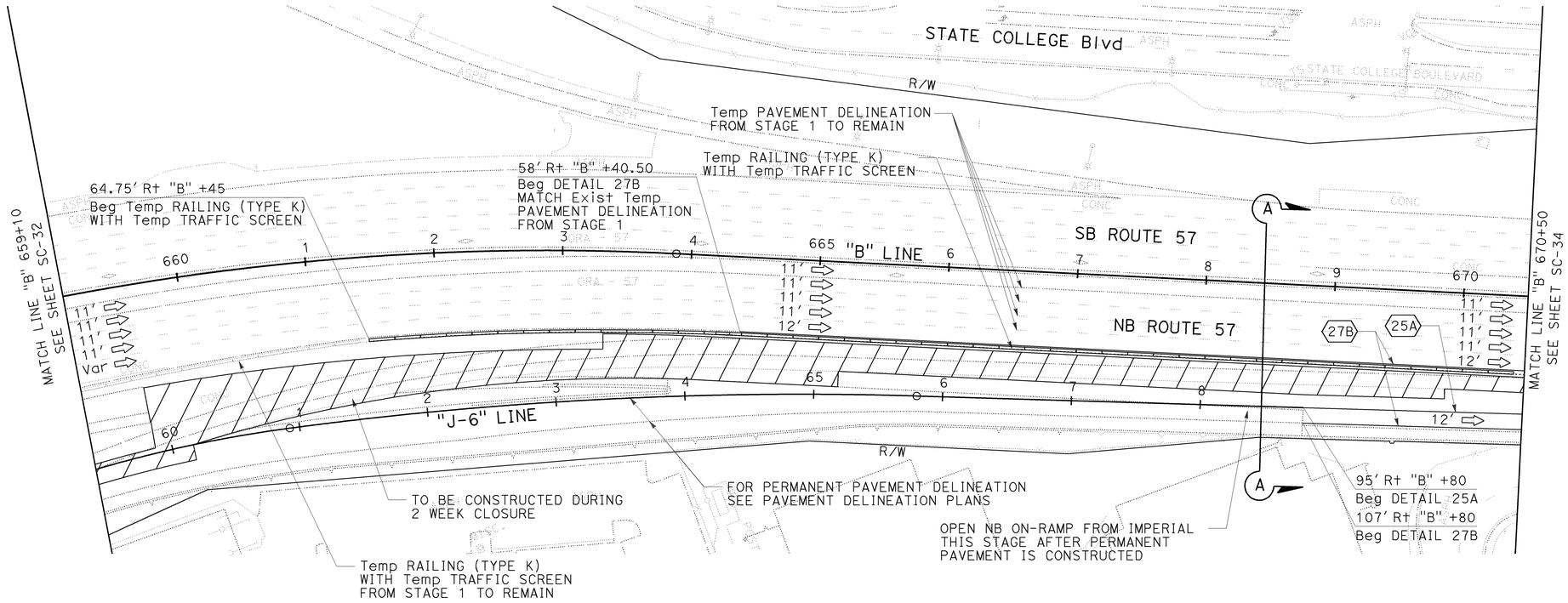

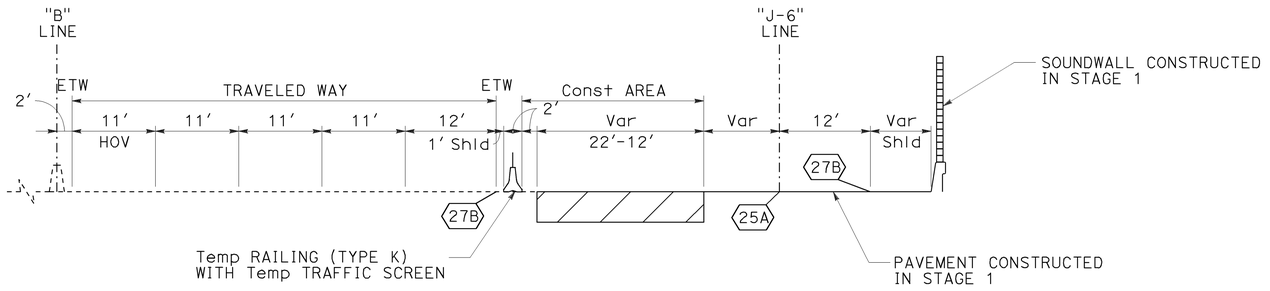

SECTION A-A
NO SCALE

THIS PLAN ACCURATE FOR STAGE CONSTRUCTION AND TRAFFIC HANDLING WORK ONLY

STAGE 3
STAGE CONSTRUCTION AND TRAFFIC HANDLING PLAN

SCALE: 1" = 50'

SC-33

REVISED BY | DATE REVISED
RYAN MITRY | MIKE ROBINSON
CALCULATED-DESIGNED BY | CHECKED BY
CONSULTANT FUNCTIONAL SUPERVISOR: THOMAS IONTA
STATE OF CALIFORNIA - DEPARTMENT OF TRANSPORTATION
Caltrans

LAST REVISION DATE PLOTTED => 25-JAN-2010
00-00-00 TIME PLOTTED => 09:02

BORDER LAST REVISED 4/11/2008 | RELATIVE BORDER SCALE IS IN INCHES 0 1 2 3 | USERNAME => trcarol | DGN FILE => c0F032ma033.dgn | CU 12220 | EA 0F0321

Dist	COUNTY	ROUTE	POST MILES TOTAL PROJECT	SHEET No.	TOTAL SHEETS
12	Ora	57	18.4/20.9	195	856

REGISTERED CIVIL ENGINEER — 06/15/09 DATE

THOMAS M. IONTA No. C45818 Exp. 12-31-10 CIVIL — REGISTERED PROFESSIONAL ENGINEER — STATE OF CALIFORNIA

1-25-10
PLANS APPROVAL DATE

THE STATE OF CALIFORNIA OR ITS OFFICERS OR AGENTS SHALL NOT BE RESPONSIBLE FOR THE ACCURACY OR COMPLETENESS OF SCANNED COPIES OF THIS PLAN SHEET.

CH2M HILL
6 HUTTON CENTRE DRIVE,
SUITE 700
SANTA ANA, CA 92707

OCTA
550 S. MAIN STREET
ORANGE, CA 92863

NOTES:

1. FOR COMPLETE RIGHT OF WAY AND ACCURATE ACCESS DATA, SEE RIGHT OF WAY RECORD MAPS AT DISTRICT OFFICE.
2. FOR LEGEND AND NOTES SEE SHEET SC-10.

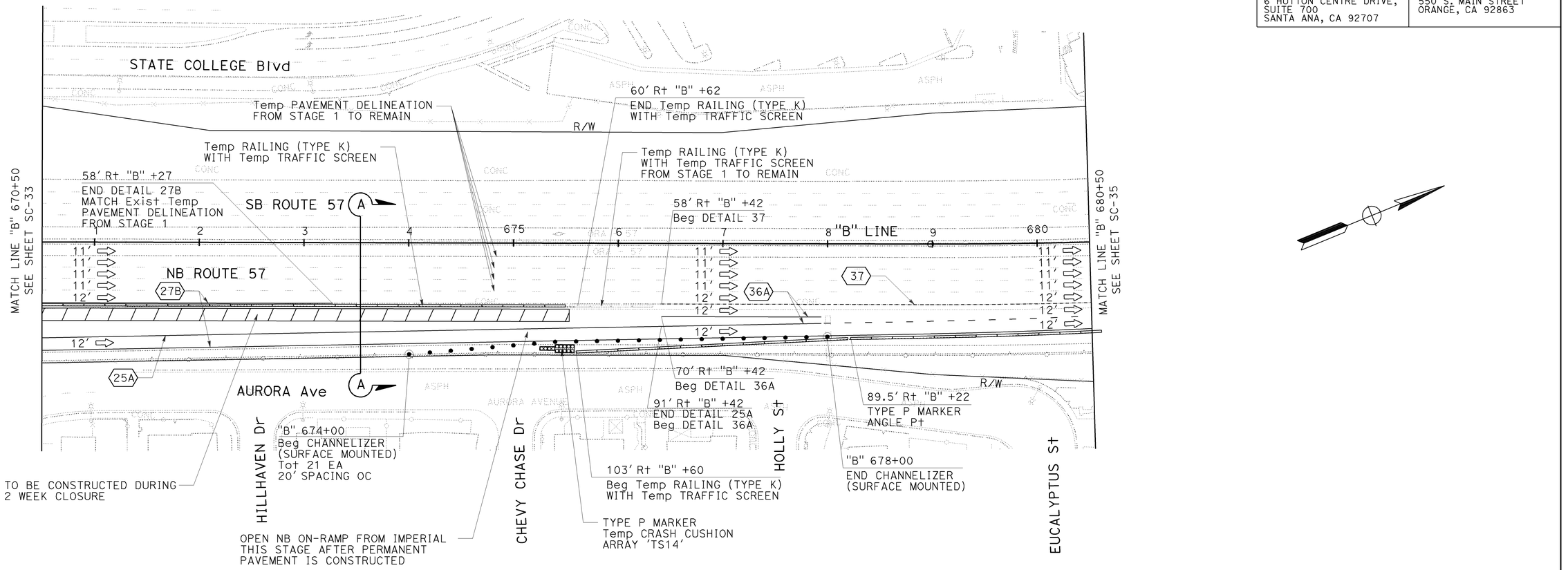

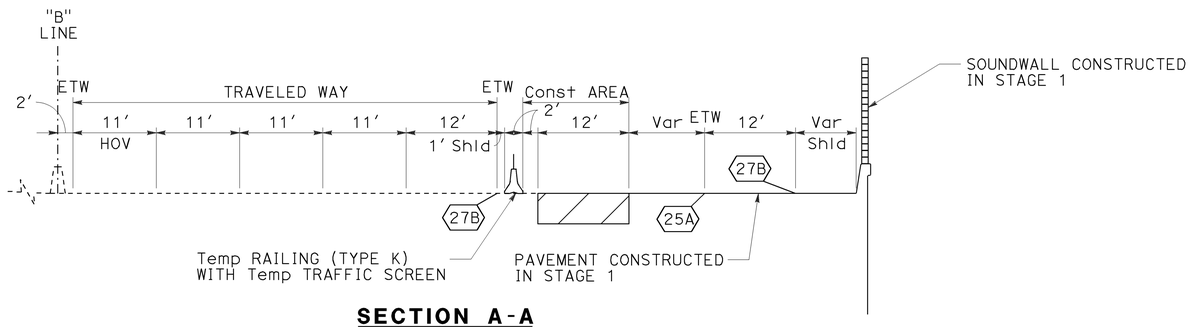

SECTION A-A
NO SCALE

THIS PLAN ACCURATE FOR STAGE CONSTRUCTION AND TRAFFIC HANDLING WORK ONLY

STAGE 3
STAGE CONSTRUCTION AND TRAFFIC HANDLING PLAN

SCALE: 1" = 50′

SC-34

REVISED BY	DATE REVISED
RYAN MITRY	MIKE ROBINSON

CALCULATED-DESIGNED BY | CHECKED BY

CONSULTANT FUNCTIONAL SUPERVISOR: THOMAS IONTA

STATE OF CALIFORNIA - DEPARTMENT OF TRANSPORTATION

Caltrans

LAST REVISION | DATE PLOTTED => 25-JAN-2010
00-00-00 | TIME PLOTTED => 09:02

BORDER LAST REVISED 4/11/2008 | RELATIVE BORDER SCALE IS IN INCHES 0 1 2 3 | USERNAME => trcarol | DGN FILE => c0F032ma034.dgn | CU 12220 | EA 0F0321

Dist	COUNTY	ROUTE	POST MILES TOTAL PROJECT	SHEET No.	TOTAL SHEETS
12	Ora	57	18.4/20.9	196	856

REGISTERED CIVIL ENGINEER — 06/15/09 DATE

THOMAS M. IONTA No. C45818 Exp. 12-31-10 CIVIL — REGISTERED PROFESSIONAL ENGINEER — STATE OF CALIFORNIA

1-25-10
PLANS APPROVAL DATE

THE STATE OF CALIFORNIA OR ITS OFFICERS OR AGENTS SHALL NOT BE RESPONSIBLE FOR THE ACCURACY OR COMPLETENESS OF SCANNED COPIES OF THIS PLAN SHEET.

CH2M HILL
6 HUTTON CENTRE DRIVE,
SUITE 700
SANTA ANA, CA 92707

OCTA
550 S. MAIN STREET
ORANGE, CA 92863

NOTES:

1. FOR COMPLETE RIGHT OF WAY AND ACCURATE ACCESS DATA, SEE RIGHT OF WAY RECORD MAPS AT DISTRICT OFFICE.
2. FOR LEGEND AND NOTES SEE SHEET SC-10.

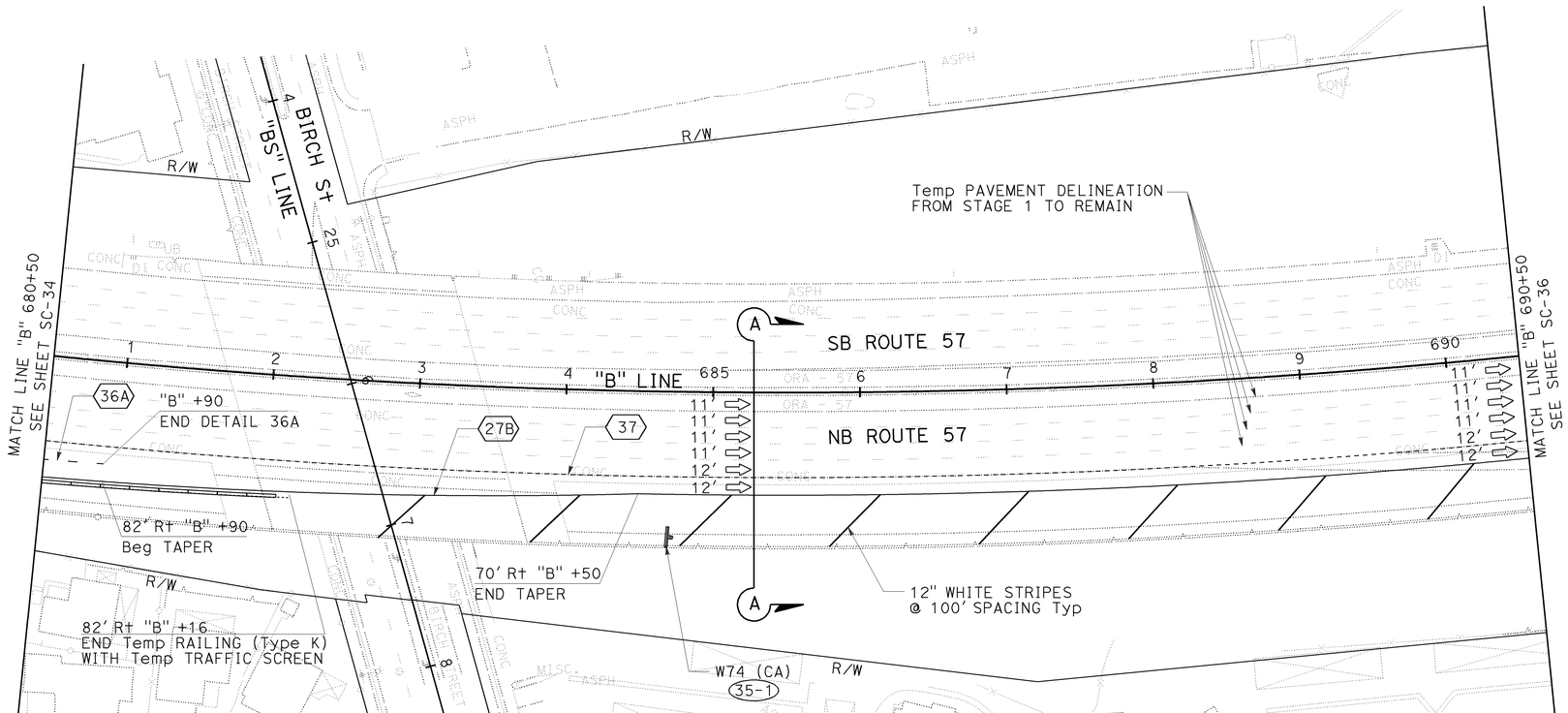

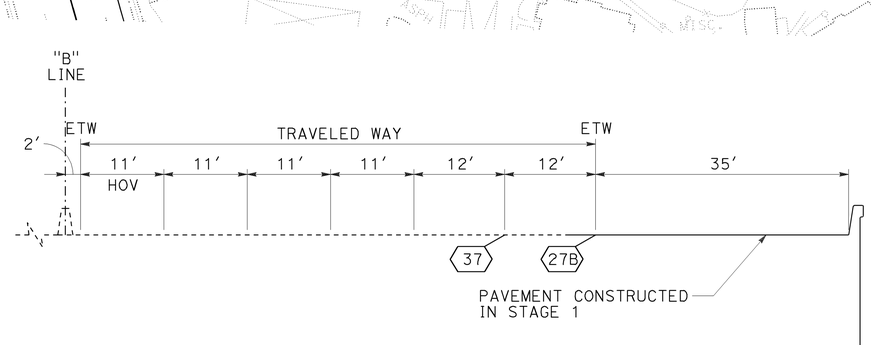

SECTION A-A
NO SCALE

THIS PLAN ACCURATE FOR STAGE CONSTRUCTION AND TRAFFIC HANDLING WORK ONLY

STAGE 3
STAGE CONSTRUCTION AND TRAFFIC HANDLING PLAN

SCALE: 1" = 50'

SC-35

STATE OF CALIFORNIA - DEPARTMENT OF TRANSPORTATION
Caltrans

CONSULTANT FUNCTIONAL SUPERVISOR: THOMAS IONTA

CALCULATED-DESIGNED BY: RYAN MITRY
CHECKED BY: MIKE ROBINSON

REVISED BY | DATE REVISED

LAST REVISION | DATE PLOTTED => 25-JAN-2010
00-00-00 | TIME PLOTTED => 09:03

BORDER LAST REVISED 4/11/2008

RELATIVE BORDER SCALE IS IN INCHES 0 1 2 3

USERNAME => trcarol
DGN FILE => c0F032ma035.dgn

CU 12220

EA 0F0321

Dist	COUNTY	ROUTE	POST MILES TOTAL PROJECT	SHEET No.	TOTAL SHEETS
12	Ora	57	18.4/20.9	197	856

REGISTERED CIVIL ENGINEER — 11-16-09 DATE

THOMAS M. IONTA No. C45818 Exp. 12-31-10 CIVIL — REGISTERED PROFESSIONAL ENGINEER — STATE OF CALIFORNIA

1-25-10
PLANS APPROVAL DATE

THE STATE OF CALIFORNIA OR ITS OFFICERS OR AGENTS SHALL NOT BE RESPONSIBLE FOR THE ACCURACY OR COMPLETENESS OF SCANNED COPIES OF THIS PLAN SHEET.

CH2M HILL
6 HUTTON CENTRE DRIVE,
SUITE 700
SANTA ANA, CA 92707

OCTA
550 S. MAIN STREET
ORANGE, CA 92863

NOTES:

1. FOR COMPLETE RIGHT OF WAY AND ACCURATE ACCESS DATA, SEE RIGHT OF WAY RECORD MAPS AT DISTRICT OFFICE.
2. FOR LEGEND AND NOTES SEE SHEET SC-10.

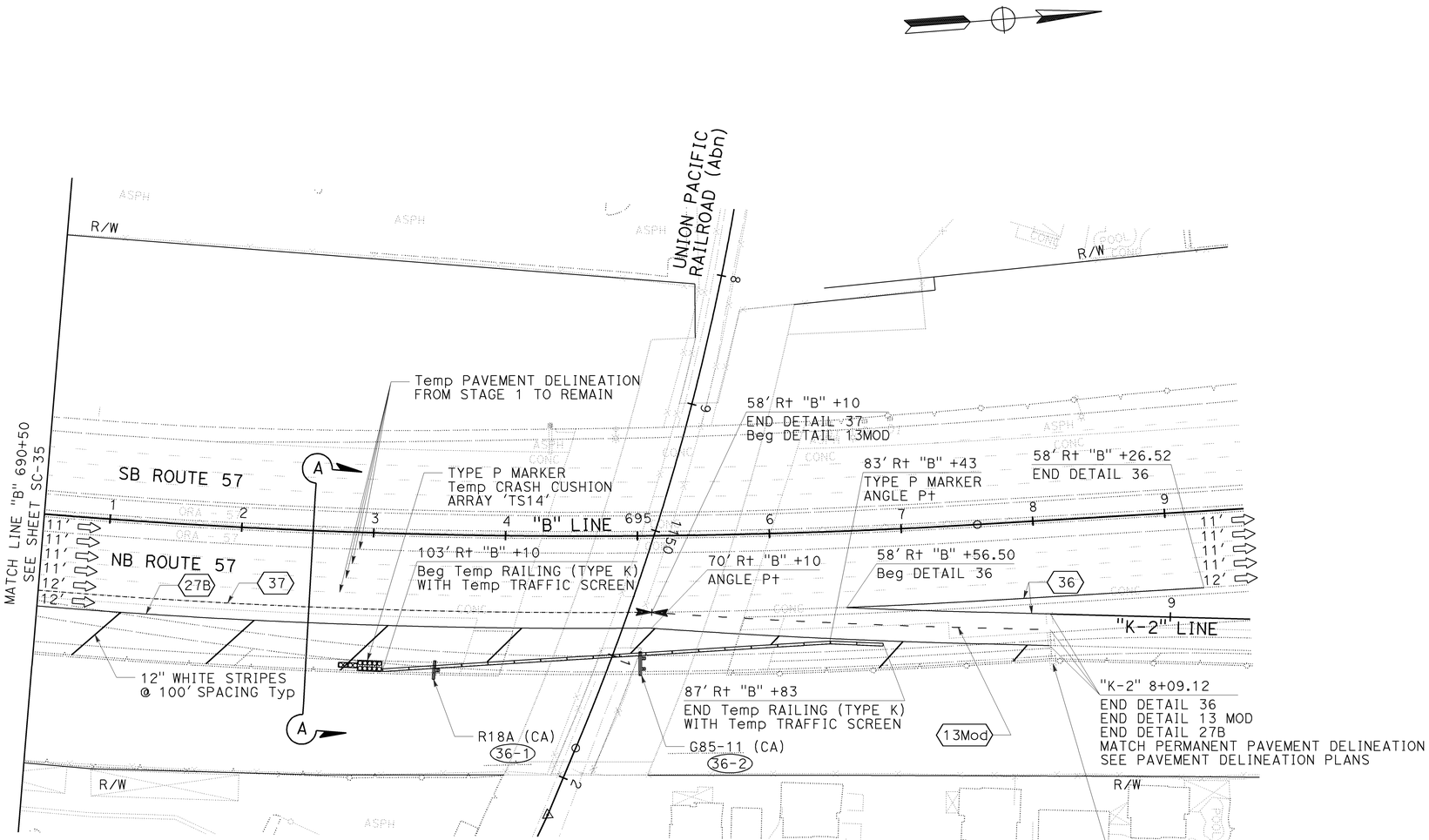

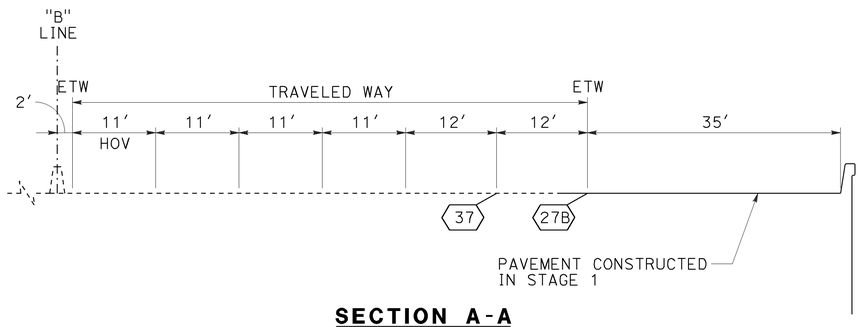

SECTION A-A
NO SCALE

THIS PLAN ACCURATE FOR STAGE CONSTRUCTION AND TRAFFIC HANDLING WORK ONLY

STAGE 3
STAGE CONSTRUCTION AND TRAFFIC HANDLING PLAN

SCALE: 1" = 50'

SC-36

LAST REVISION DATE PLOTTED => 25-JAN-2010
00-00-00 TIME PLOTTED => 09:33

REVISED BY | DATE REVISED
CALCULATED-DESIGNED BY: RYAN MITRY
CHECKED BY: MIKE ROBINSON
CONSULTANT FUNCTIONAL SUPERVISOR: THOMAS IONTA
STATE OF CALIFORNIA - DEPARTMENT OF TRANSPORTATION
Caltrans

BORDER LAST REVISED 4/11/2008

RELATIVE BORDER SCALE IS IN INCHES 0 1 2 3

USERNAME => trmnguye
DGN FILE => c0F032ma036.dgn

CU 12220

EA 0F0321

Dist	COUNTY	ROUTE	POST MILES TOTAL PROJECT	SHEET No.	TOTAL SHEETS
12	Ora	57	18.4/20.9	198	856

REGISTERED CIVIL ENGINEER — 11-16-09 DATE

1-25-10
PLANS APPROVAL DATE

REGISTERED PROFESSIONAL ENGINEER — THOMAS M. IONTA — No. C45818 — Exp. 12-31-10 — CIVIL — STATE OF CALIFORNIA

THE STATE OF CALIFORNIA OR ITS OFFICERS OR AGENTS SHALL NOT BE RESPONSIBLE FOR THE ACCURACY OR COMPLETENESS OF SCANNED COPIES OF THIS PLAN SHEET.

CH2M HILL
6 HUTTON CENTRE DRIVE,
SUITE 700
SANTA ANA, CA 92707

OCTA
550 S. MAIN STREET
ORANGE, CA 92863

NOTES:

1. FOR COMPLETE RIGHT OF WAY AND ACCURATE ACCESS DATA, SEE RIGHT OF WAY RECORD MAPS AT DISTRICT OFFICE.
2. FOR LEGEND AND NOTES SEE SHEET SC-10.

CURVE DATA

No.	R	Δ	T	L
(1)	3060.00′	8°39′22"	231.59′	462.30′
(2)	2100.00′	12°12′36"	224.61′	447.52′

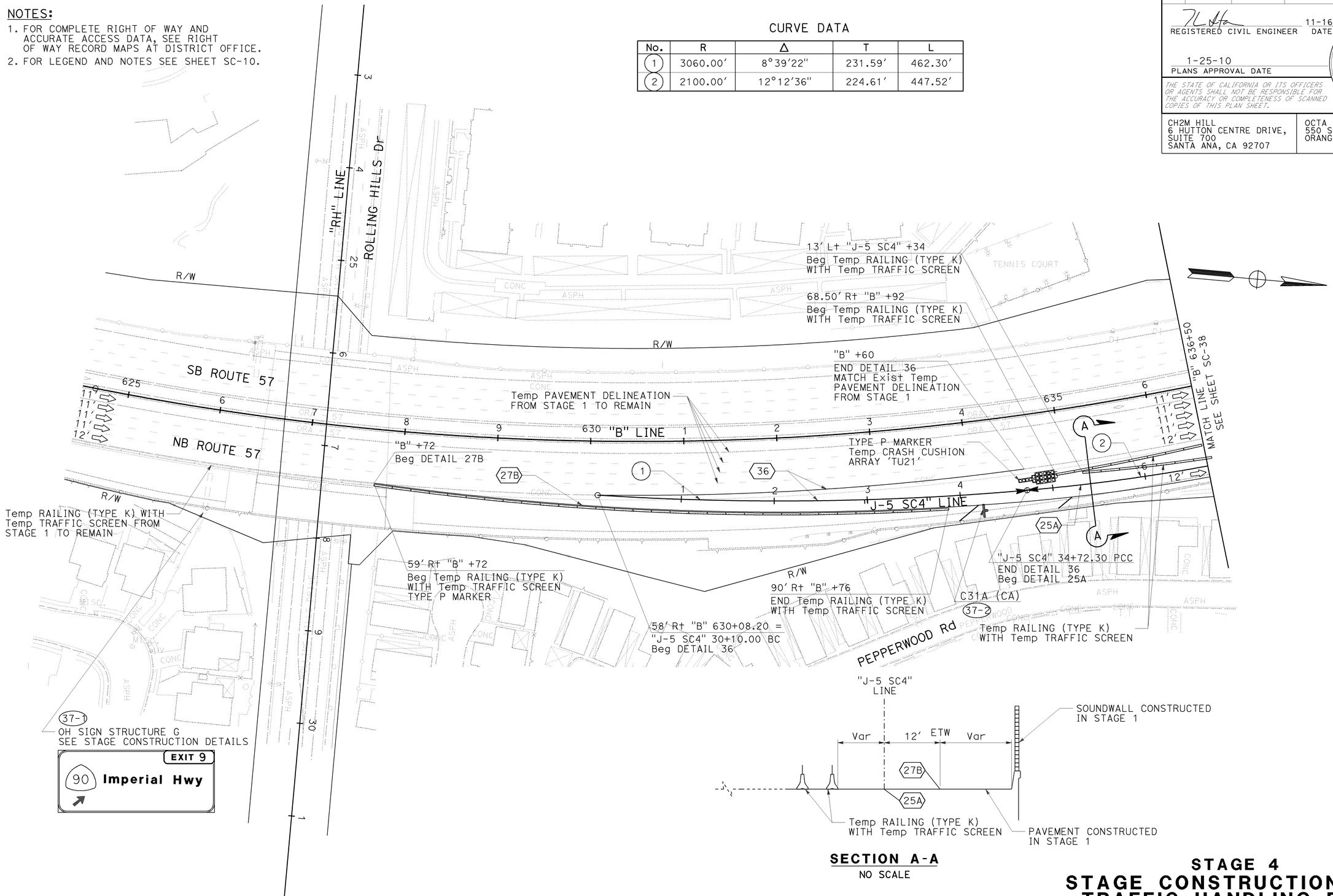

SECTION A-A
NO SCALE

THIS PLAN ACCURATE FOR STAGE CONSTRUCTION AND TRAFFIC HANDLING WORK ONLY

STAGE 4
STAGE CONSTRUCTION AND TRAFFIC HANDLING PLAN

SCALE: 1" = 50′

SC-37

REVISED BY | DATE REVISED
RYAN MITRY | MIKE ROBINSON
CALCULATED-DESIGNED BY | CHECKED BY
CONSULTANT FUNCTIONAL SUPERVISOR: THOMAS IONTA
STATE OF CALIFORNIA - DEPARTMENT OF TRANSPORTATION
Caltrans

LAST REVISION 00-00-00
DATE PLOTTED => 25-JAN-2010
TIME PLOTTED => 09:34

BORDER LAST REVISED 4/11/2008
RELATIVE BORDER SCALE IS IN INCHES 0 1 2 3
USERNAME => trmnguye
DGN FILE => c0F032ma037.dgn
CU 12220
EA 0F0321

Dist	COUNTY	ROUTE	POST MILES TOTAL PROJECT	SHEET No.	TOTAL SHEETS
12	Ora	57	18.4/20.9	199	856

REGISTERED CIVIL ENGINEER — 06/15/09 DATE

1-25-10
PLANS APPROVAL DATE

THOMAS M. IONTA No. C45818 Exp. 12-31-10 CIVIL — REGISTERED PROFESSIONAL ENGINEER — STATE OF CALIFORNIA

THE STATE OF CALIFORNIA OR ITS OFFICERS OR AGENTS SHALL NOT BE RESPONSIBLE FOR THE ACCURACY OR COMPLETENESS OF SCANNED COPIES OF THIS PLAN SHEET.

CH2M HILL
6 HUTTON CENTRE DRIVE,
SUITE 700
SANTA ANA, CA 92707

OCTA
550 S. MAIN STREET
ORANGE, CA 92863

NOTES:

1. FOR COMPLETE RIGHT OF WAY AND ACCURATE ACCESS DATA, SEE RIGHT OF WAY RECORD MAPS AT DISTRICT OFFICE.
2. FOR LEGEND AND NOTES SEE SHEET SC-10.

CURVE DATA

No.	R	Δ	T	L
(2)	2100.00′	12°12′36"	224.61′	447.52′
(3)	587.81′	50°36′09"	277.87′	519.14′

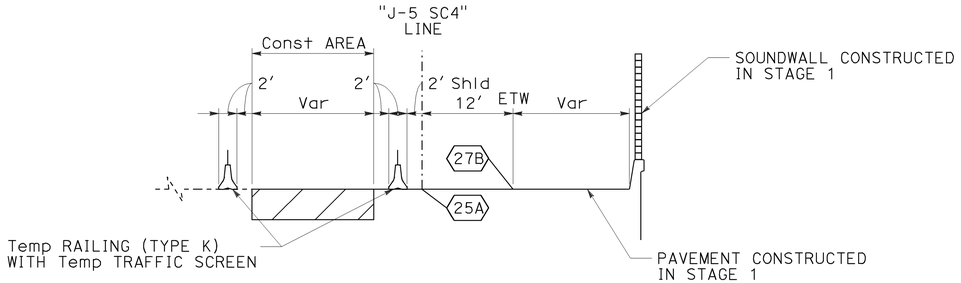

SECTION A-A
NO SCALE

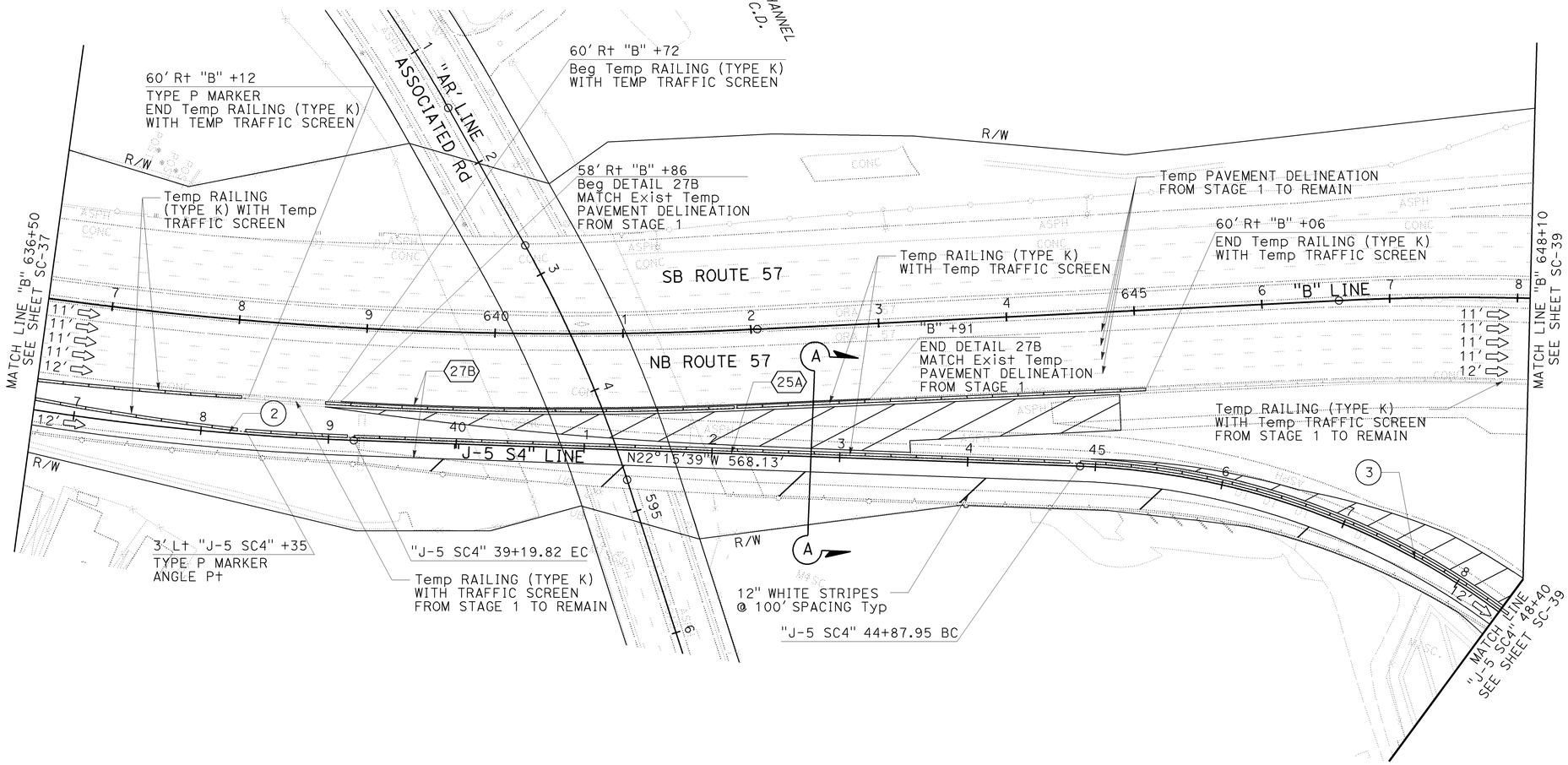

THIS PLAN ACCURATE FOR STAGE CONSTRUCTION AND TRAFFIC HANDLING WORK ONLY

STAGE 4
STAGE CONSTRUCTION AND TRAFFIC HANDLING PLAN

SCALE: 1" = 50′

SC-38

REVISED BY | DATE REVISED
RYAN MITRY | MIKE ROBINSON
CALCULATED-DESIGNED BY | CHECKED BY
THOMAS IONTA
CONSULTANT FUNCTIONAL SUPERVISOR
STATE OF CALIFORNIA - DEPARTMENT OF TRANSPORTATION
Caltrans

LAST REVISION | DATE PLOTTED => 25-JAN-2010 | TIME PLOTTED => 09:34
00-00-00

BORDER LAST REVISED 4/11/2008 | RELATIVE BORDER SCALE IS IN INCHES 0 1 2 3 | USERNAME => trmnguye | DGN FILE => c0F032ma038.dgn | CU 12220 | EA 0F0321

Dist	COUNTY	ROUTE	POST MILES TOTAL PROJECT	SHEET No.	TOTAL SHEETS
12	Ora	57	18.4/20.9	200	856

REGISTERED CIVIL ENGINEER — 06/15/09 DATE

1-25-10
PLANS APPROVAL DATE

REGISTERED PROFESSIONAL ENGINEER — THOMAS M. IONTA — No. C45818 — Exp. 12-31-10 — CIVIL — STATE OF CALIFORNIA

THE STATE OF CALIFORNIA OR ITS OFFICERS OR AGENTS SHALL NOT BE RESPONSIBLE FOR THE ACCURACY OR COMPLETENESS OF SCANNED COPIES OF THIS PLAN SHEET.

CH2M HILL
6 HUTTON CENTRE DRIVE,
SUITE 700
SANTA ANA, CA 92707

OCTA
550 S. MAIN STREET
ORANGE, CA 92863

NOTES:

1. FOR COMPLETE RIGHT OF WAY AND ACCURATE ACCESS DATA, SEE RIGHT OF WAY RECORD MAPS AT DISTRICT OFFICE.
2. FOR LEGEND AND NOTES SEE SHEET SC-10.
3. Temp RAILING (TYPE K), Temp CRASH CUSHION ARRAY AND CHANNELIZERS REQUIRED WHEN OUTSIDE EB LANE ON IMPERIAL IS OPEN.

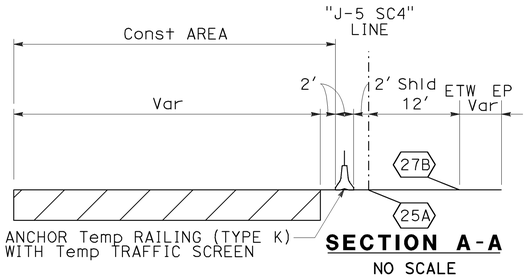

SECTION A-A
NO SCALE

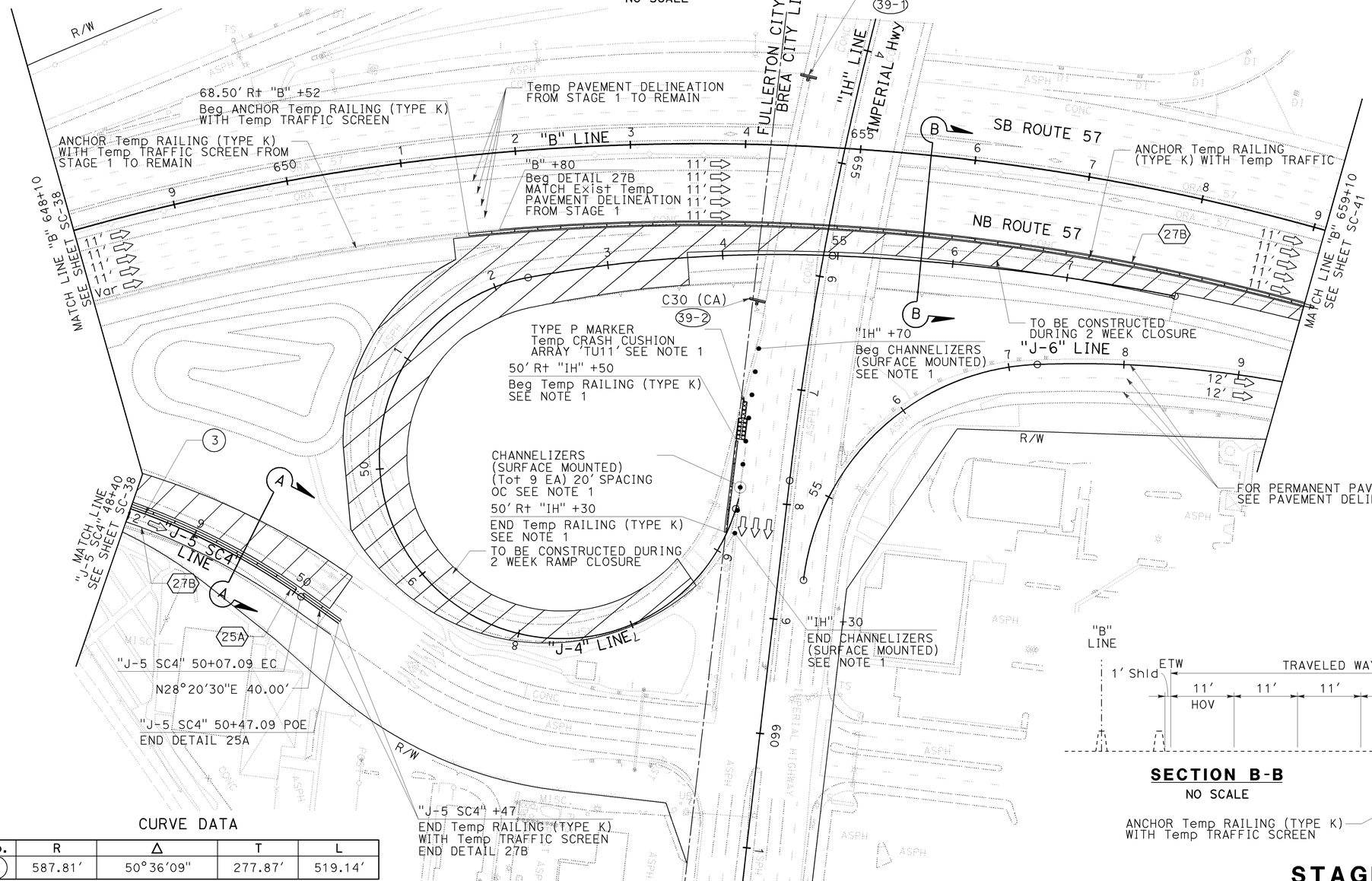

CURVE DATA

No.	R	Δ	T	L
(3)	587.81'	50°36'09"	277.87'	519.14'

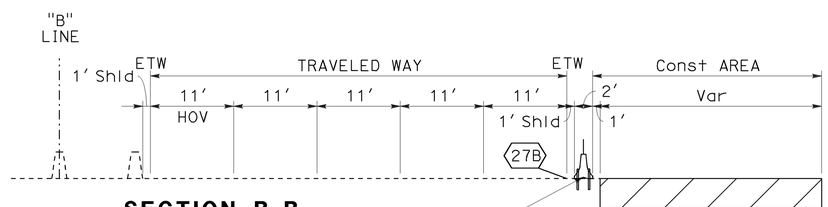

SECTION B-B
NO SCALE

THIS PLAN ACCURATE FOR STAGE CONSTRUCTION AND TRAFFIC HANDLING WORK ONLY

STAGE 4 (PHASE 1)
STAGE CONSTRUCTION AND TRAFFIC HANDLING PLAN

SCALE: 1" = 50'

SC-39

STATE OF CALIFORNIA - DEPARTMENT OF TRANSPORTATION
CONSULTANT FUNCTIONAL SUPERVISOR: THOMAS IONTA
CALCULATED-DESIGNED BY: RYAN MITRY
CHECKED BY: MIKE ROBINSON
REVISED BY
DATE REVISED

LAST REVISION DATE PLOTTED => 25-JAN-2010
TIME PLOTTED => 09:35
00-00-00

BORDER LAST REVISED 4/11/2008
RELATIVE BORDER SCALE IS IN INCHES 0 1 2 3
USERNAME => trmnguye
DGN FILE => c0F032ma039.dgn
CU 12220
EA 0F0321