DIST	COUNTY	ROUTE	POST MILES TOTAL PROJECT	SHEET No	TOTAL SHEETS
12	Ora	57	18.4/20.9	701	856

REGISTERED CIVIL ENGINEER — DATE 06/08/09

1-25-10
PLANS APPROVAL DATE

REGISTERED PROFESSIONAL ENGINEER — MOHAMMED ATIQULLAH — No. C47027 — Exp. 12/31/09 — CIVIL — STATE OF CALIFORNIA

The State of California or its officers or agents shall not be responsible for the accuracy or completeness of electronic copies of this plan sheet.

OCTA
550 S. MAIN STREET
ORANGE, CA 92863

CH2M HILL
6 HUTTON CENTRE DRIVE, SUITE 700
SANTA ANA, CA 92707

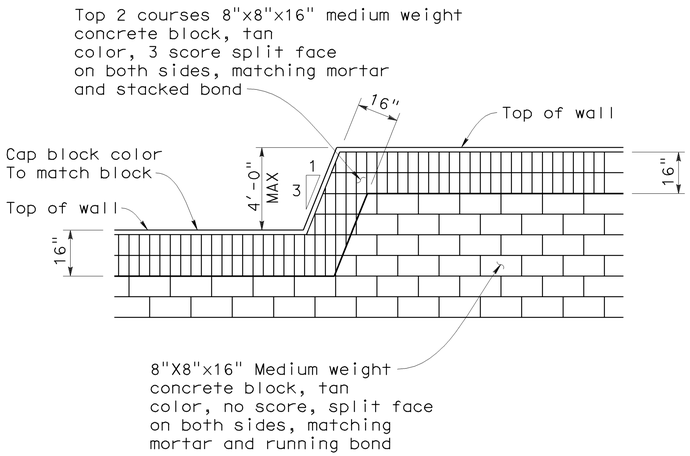

TRANSITION ELEVATION

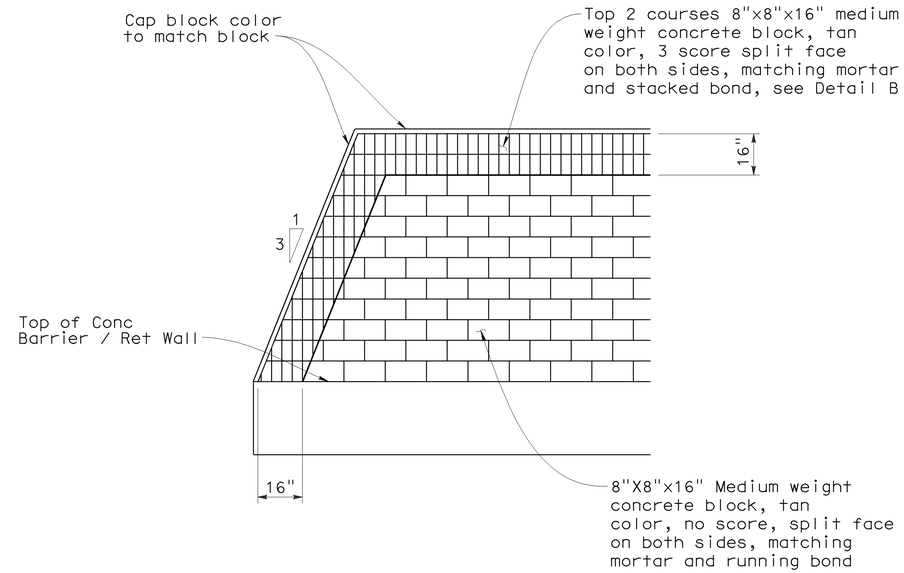

END WALL ELEVATION

CONCRETE BLOCK TYPE, COLOR AND PLACEMENT

No Scale

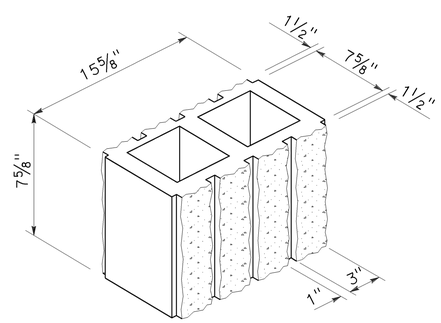

DETAIL B

No Scale

8" Wide 3-score split face both sides

DESIGN OVERSIGHT — Jon Hamaguchi	DESIGN	BY M. Atiqullah	CHECKED E. Cutler
6-9-09	DETAILS	BY M. Atiqullah	CHECKED E. Cutler
SIGN OFF DATE	QUANTITIES	BY B. Ho	CHECKED L. Ros

PREPARED FOR THE STATE OF CALIFORNIA DEPARTMENT OF TRANSPORTATION

Ayman Salama
PROJECT ENGINEER

BRIDGE NO. 55E0089
POST MILE 19.06

RETAINING WALL NO. 614

SOUNDWALL MASONRY BLOCK MISCELLANEOUS DETAILS

DESIGN DETAIL SHEET (ENGLISH) (REV. 2/25/05)

ORIGINAL SCALE IN INCHES FOR REDUCED PLANS 0 1 2 3

CU 12220
EA 0F0321

DISREGARD PRINTS BEARING EARLIER REVISION DATES → 06/08/09

REVISION DATES (PRELIMINARY STAGE ONLY)

SHEET 18 OF 21

FILE => 55e0089-u-miscdt01.dgn

USERNAME => ttienard DATE PLOTTED => 25-JAN-2010 TIME PLOTTED => 08:36

DIST	COUNTY	ROUTE	POST MILES TOTAL PROJECT	SHEET No	TOTAL SHEETS
12	Ora	57	18.4/20.9	702	856

REGISTERED CIVIL ENGINEER — DATE 06/08/09

1-25-10
PLANS APPROVAL DATE

REGISTERED PROFESSIONAL ENGINEER — MOHAMMED ATIQULLAH — No. C47027 — Exp. 12/31/09 — CIVIL — STATE OF CALIFORNIA

The State of California or its officers or agents shall not be responsible for the accuracy or completeness of electronic copies of this plan sheet.

OCTA
550 S. MAIN STREET
ORANGE, CA 92863

CH2M HILL
6 HUTTON CENTRE DRIVE, SUITE 700
SANTA ANA, CA 92707

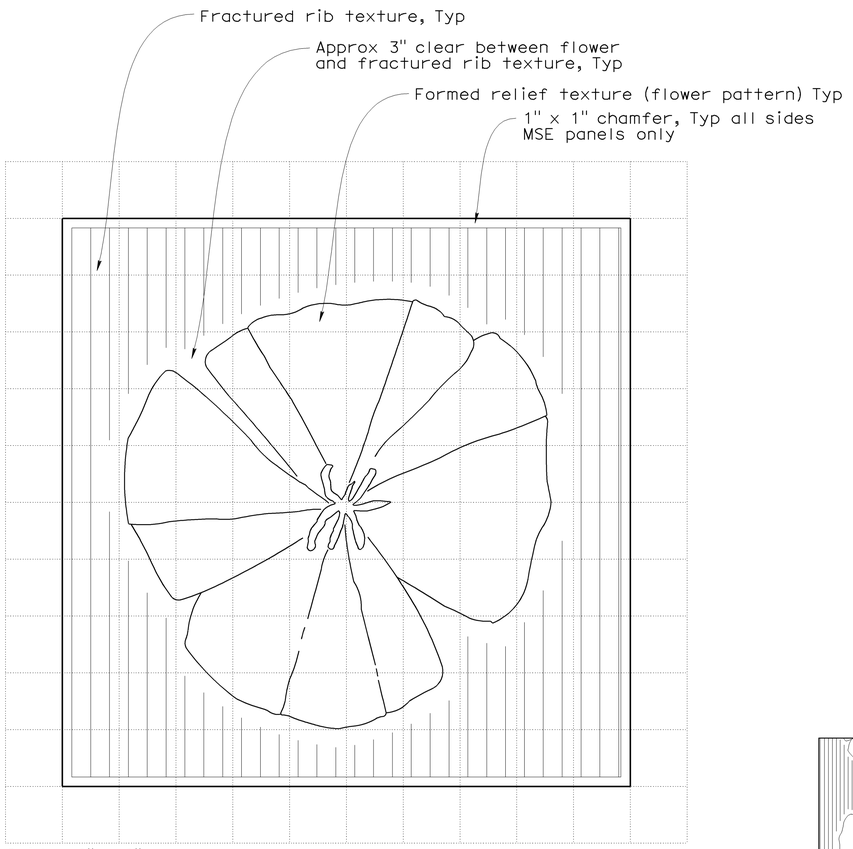

ARCHITECTURAL SURFACE (TEXTURED CONCRETE) FOR MSE PANEL

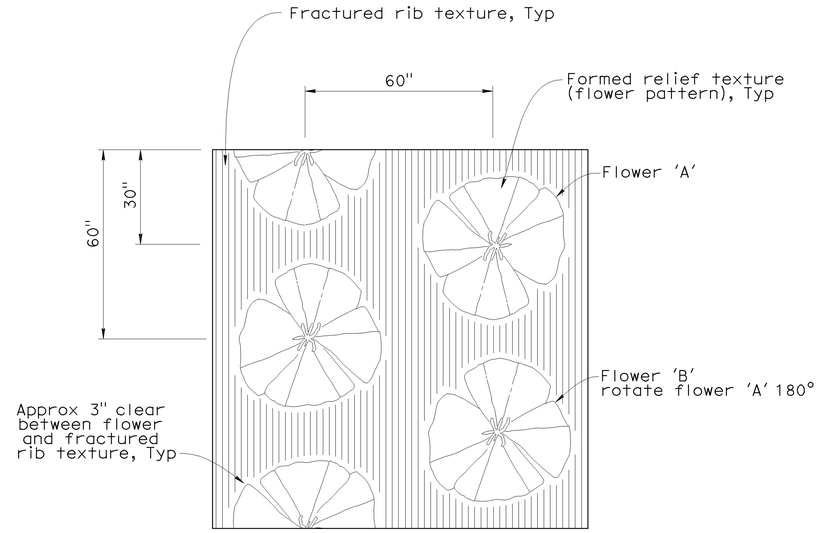

ARCHITECTURAL SURFACE (TEXTURED CONCRETE) PATTERN

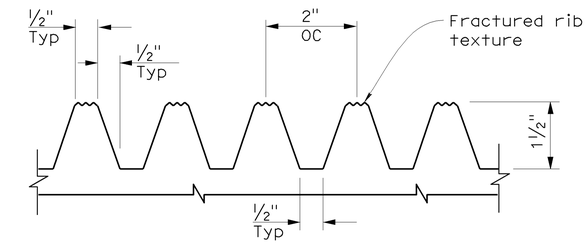

FRACTURED RIB TEXTURE DETAIL

(Elastomer Formliner)

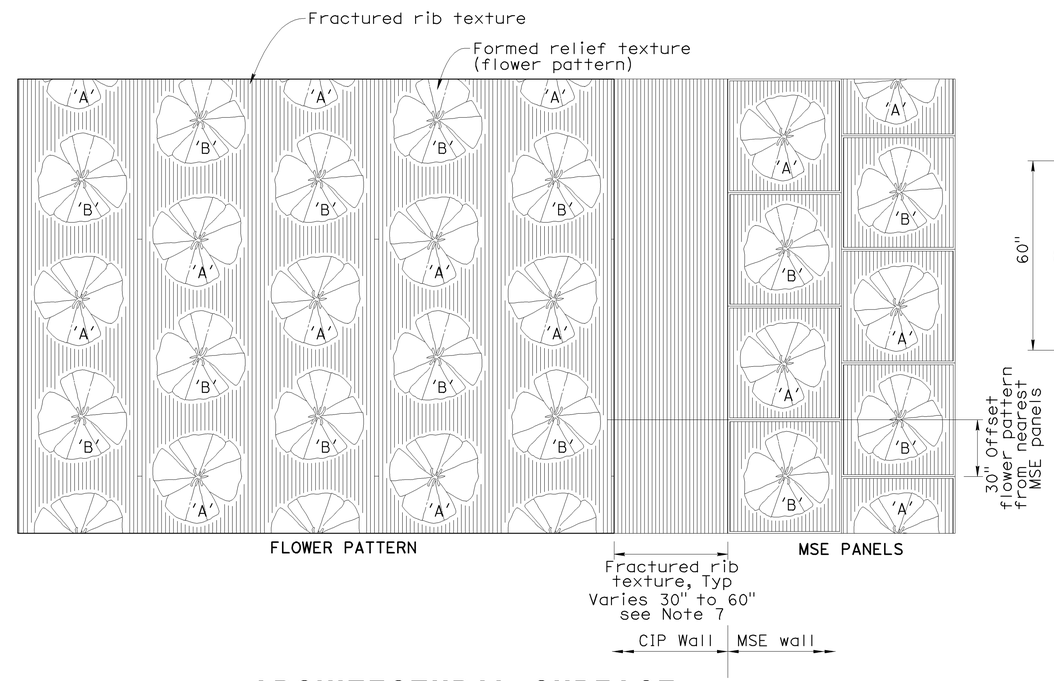

ARCHITECTURAL SURFACE (TEXTURED CONCRETE) ELEVATION

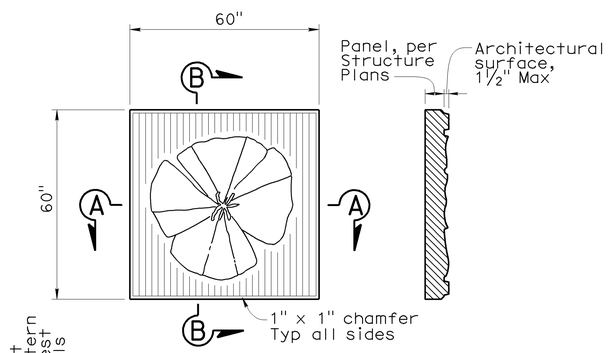

VIEW

SECTION B-B

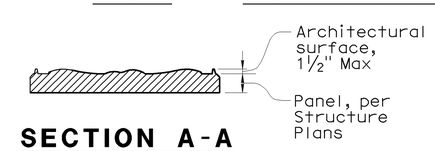

SECTION A-A

MSE PANEL

No scale

NOTES:

1. Identical flower images, scale and spacing shall be used for flower pattern and MSE wall panels.
2. Within a vertical column, flower images shall alternate between flowers 'A' and 'B'. Vertical columns shall be offset 30" from adjacent columns.
3. Where placed on walls bounded by concrete barriers, finished grade or top of wall, flower pattern shall be continued without concern for partial flower images, except as noted.
4. Refer to structural details for width of smooth band to be applied at edges of structures.
5. Where the flower pattern will be used adjacent to a horizontal limit such as a bridge abutment, adjoining MSE wall or overhead sign structure support, flower pattern shall be discontinued from a section not less than 30" and not greater than 60" wide from the horizontal limit to avoid truncation of flower images. Fractured rib texture shall be inserted in the resulting gap to create a continuous buffer between pattern areas.
6. The nearest column of flower images (flower pattern) shall be offset vertically 30" from the panels.
7. Vary fractured rib texture width (30" to 60") to provide complete flower pattern on cip wall side.

DESIGN OVERSIGHT — Jon Hamaguchi
6-9-09
SIGN OFF DATE

	BY	CHECKED
DESIGN	M. Atiqullah	E. Cutler
DETAILS	M. Atiqullah	E. Cutler
QUANTITIES	B. Ho	L. Ros

PREPARED FOR THE STATE OF CALIFORNIA DEPARTMENT OF TRANSPORTATION

Ayman Salama
PROJECT ENGINEER

BRIDGE NO. 55E0089
POST MILE 19.06

RETAINING WALL NO. 614
ARCHITECTURAL TREATMENT DETAILS

DESIGN DETAIL SHEET (ENGLISH) (REV. 2/25/05)

ORIGINAL SCALE IN INCHES FOR REDUCED PLANS 0 1 2 3

CU 12220
EA 0F0321

DISREGARD PRINTS BEARING EARLIER REVISION DATES — REVISION DATES (PRELIMINARY STAGE ONLY) 06/08/09

SHEET 19 OF 21

FILE => 55e0089-u-tarcdt01.dgn

USERNAME => trienord DATE PLOTTED => 25-JAN-2010 TIME PLOTTED => 08:37

DIST	COUNTY	ROUTE	POST MILES TOTAL PROJECT	SHEET No	TOTAL SHEETS
12	Ora	57	18.4/20.9	703	856

GEOTECHNICAL PROFESSIONAL — 06/08/09 DATE

1-25-10
PLANS APPROVAL DATE

REGISTERED PROFESSIONAL ENGINEER — HISHAM M. NOFAL No. 2765 Exp. 09/30/09 GEOTECHNICAL — STATE OF CALIFORNIA

The State of California or its officers or agents shall not be responsible for the accuracy or completeness of electronic copies of this plan sheet.

OCTA
550 S. MAIN STREET
ORANGE, CA 92863

CH2M HILL
6 HUTTON CENTRE DRIVE, SUITE 700
SANTA ANA, CA 92707

BENCHMARK:

Horizontal coordinates are CCA NAD-83, Zone 6.
Vertical control based on North American Vertical Datum 1988.
Pt 1065: n2276096.906, E6066849.261, Elev 345.199

SAMPLER TYPES:

California modified ring sampler
standard penetration test sampler

HAMMER TYPE:

Automatic hammer

CORRECTION FACTOR:

To convert from California modified ring sampler blow count to equivalent standard penetration test sampler blow count, for granular and cohesive soil, multiply by 0.67.

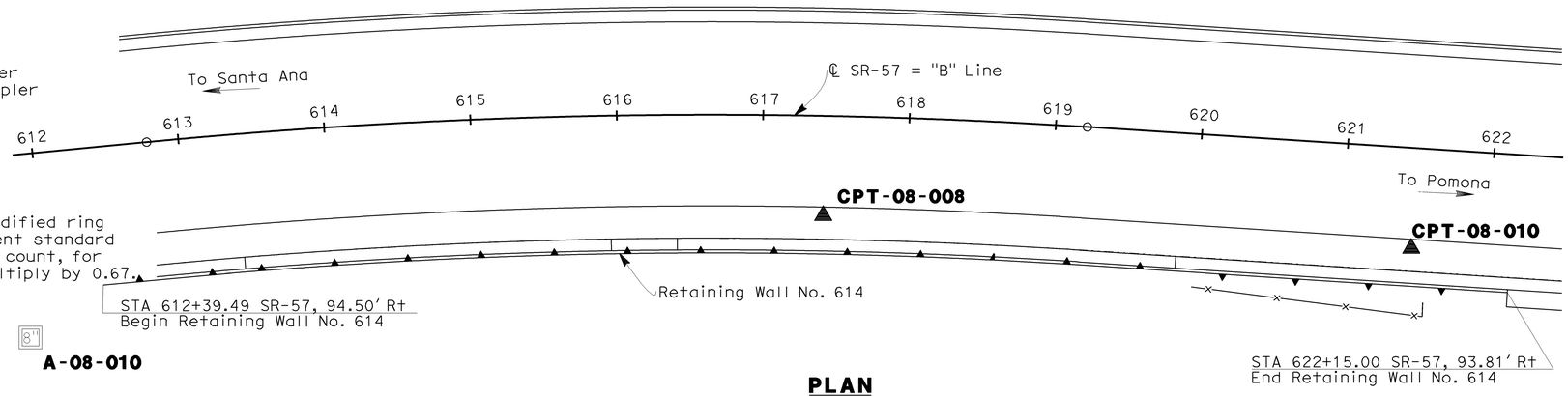

PLAN
1"=50'

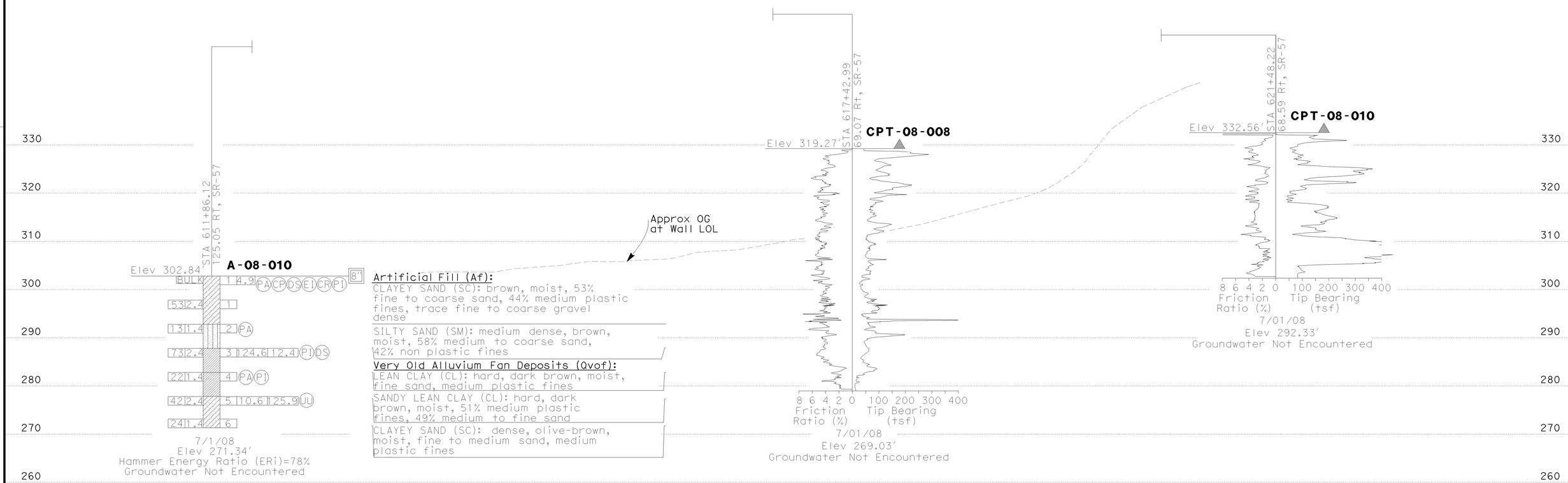

PROFILE
Horz:1"=50'
Vert: 1"=10'

STATIONING "SR-57" = "B" Line

610 611 612 613 614 615 616 617 618 619 620 621 622 623 624 625

DESIGN OVERSIGHT Jon Hamaguchi	DRAWN BY	K. Reyes	R. Bethapudi FIELD INVESTIGATION BY:
6-9-09 SIGN OFF DATE	CHECKED BY	H. Nofal	DATE

PREPARED FOR THE STATE OF CALIFORNIA DEPARTMENT OF TRANSPORTATION

Ayman Salama
PROJECT ENGINEER

BRIDGE NO. 55E0089
POST MILES 19.06

RETAINING WALL No. 614
LOG OF TEST BORINGS SHEET 1 OF 2

ORIGINAL SCALE IN INCHES FOR REDUCED PLANS 0 1 2 3

CU 12220
EA 0F0321

DISREGARD PRINTS BEARING EARLIER REVISION DATES

REVISION DATES (PRELIMINARY STAGE ONLY): 02/18/09 04/07/09 04/17/09 06/08/09

SHEET 20 OF 21

FILE => 55e0089-z-1tb01.dgn

USERNAME => friehard DATE PLOTTED => 25-JAN-2010 TIME PLOTTED => 08:37

DIST	COUNTY	ROUTE	POST MILES TOTAL PROJECT	SHEET No	TOTAL SHEETS
12	Ora	57	18.4/20.9	704	856

Hisham Nofal 06/08/09
GEOTECHNICAL PROFESSIONAL DATE

1-25-10
PLANS APPROVAL DATE

REGISTERED PROFESSIONAL ENGINEER HISHAM M. NOFAL No. 2765 Exp. 09/30/09 GEOTECHNICAL STATE OF CALIFORNIA

The State of California or its officers or agents shall not be responsible for the accuracy or completeness of electronic copies of this plan sheet.

OCTA
550 S. MAIN STREET
ORANGE, CA 92863

CH2M HILL
6 HUTTON CENTRE DRIVE, SUITE 700
SANTA ANA, CA 92707

REFERENCE: CALTRANS SOIL & ROCK LOGGING, CLASSIFICATION, AND PRESENTATION MANUAL (JUNE 2007)

GROUP SYMBOLS AND NAMES

Graphic/Symbol	Group Names	Graphic/Symbol	Group Names
GW	Well-graded GRAVEL Well-graded GRAVEL with SAND	CL	Lean CLAY Lean CLAY with SAND Lean CLAY with GRAVEL SANDY lean CLAY SANDY lean CLAY with GRAVEL GRAVELLY lean CLAY GRAVELLY lean CLAY with SAND
GP	Poorly graded GRAVEL Poorly graded GRAVEL with SAND		
GW-GM	Well-graded GRAVEL with SILT Well-graded GRAVEL with SILT and SAND	CL-ML	SILTY CLAY SILTY CLAY with SAND SILTY CLAY with GRAVEL SANDY SILTY CLAY SANDY SILTY CLAY with GRAVEL GRAVELLY SILTY CLAY GRAVELLY SILTY CLAY with SAND
GW-GC	Well-graded GRAVEL with CLAY (or SILTY CLAY) Well-graded GRAVEL with CLAY and SAND (or SILTY CLAY and SAND)		
GP-GM	Poorly graded GRAVEL with SILT Poorly graded GRAVEL with SILT and SAND	ML	SILT SILT with SAND SILT with GRAVEL SANDY SILT SANDY SILT with GRAVEL GRAVELLY SILT GRAVELLY SILT with SAND
GP-GC	Poorly graded GRAVEL with CLAY (or SILTY CLAY) Poorly graded GRAVEL with CLAY and SAND (or SILTY CLAY and SAND)		
GM	SILTY GRAVEL SILTY GRAVEL with SAND	OL	ORGANIC lean CLAY ORGANIC lean CLAY with SAND ORGANIC lean CLAY with GRAVEL SANDY ORGANIC lean CLAY SANDY ORGANIC lean CLAY with GRAVEL GRAVELLY ORGANIC lean CLAY GRAVELLY ORGANIC lean CLAY with SAND
GC	CLAYEY GRAVEL CLAYEY GRAVEL with SAND		
GC-GM	SILTY, CLAYEY GRAVEL SILTY, CLAYEY GRAVEL with SAND	OL	ORGANIC SILT ORGANIC SILT with SAND ORGANIC SILT with GRAVEL SANDY ORGANIC SILT SANDY ORGANIC SILT with GRAVEL GRAVELLY ORGANIC SILT GRAVELLY ORGANIC SILT with SAND
SW	Well-graded SAND Well-graded SAND with GRAVEL		
SP	Poorly graded SAND Poorly graded SAND with GRAVEL	CH	Fat CLAY Fat CLAY with SAND Fat CLAY with GRAVEL SANDY fat CLAY SANDY fat CLAY with GRAVEL GRAVELLY fat CLAY GRAVELLY fat CLAY with SAND
SW-SM	Well-graded SAND with SILT Well-graded SAND with SILT and GRAVEL		
SW-SC	Well-graded SAND with CLAY (or SILTY CLAY) Well-graded SAND with CLAY and GRAVEL (or SILTY CLAY and GRAVEL)	MH	Elastic SILT Elastic SILT with SAND Elastic SILT with GRAVEL SANDY elastic SILT SANDY elastic SILT with GRAVEL GRAVELLY elastic SILT GRAVELLY elastic SILT with SAND
SP-SM	Poorly graded SAND with SILT Poorly graded SAND with SILT and GRAVEL		
SP-SC	Poorly graded SAND with CLAY (or SILTY CLAY) Poorly graded SAND with CLAY and GRAVEL (or SILTY CLAY and GRAVEL)	OH	ORGANIC fat CLAY ORGANIC fat CLAY with SAND ORGANIC fat CLAY with GRAVEL SANDY ORGANIC fat CLAY SANDY ORGANIC fat CLAY with GRAVEL GRAVELLY ORGANIC fat CLAY GRAVELLY ORGANIC fat CLAY with SAND
SM	SILTY SAND SILTY SAND with GRAVEL		
SC	CLAYEY SAND CLAYEY SAND with GRAVEL	OH	ORGANIC elastic SILT ORGANIC elastic SILT with SAND ORGANIC elastic SILT with GRAVEL SANDY ORGANIC elastic SILT SANDY ORGANIC elastic SILT with GRAVEL GRAVELLY ORGANIC elastic SILT GRAVELLY ORGANIC elastic SILT with SAND
SC-SM	SILTY, CLAYEY SAND SILTY, CLAYEY SAND with GRAVEL		
PT	PEAT	OL/OH	ORGANIC SOIL ORGANIC SOIL with SAND ORGANIC SOIL with GRAVEL SANDY ORGANIC SOIL SANDY ORGANIC SOIL with GRAVEL GRAVELLY ORGANIC SOIL GRAVELLY ORGANIC SOIL with SAND
	COBBLES COBBLES and BOULDERS BOULDERS		

FIELD AND LABORATORY TESTING

- (C) Consolidation (ASTM D 2435)
- (CL) Collapse Potential (ASTM D 5333)
- (CP) Compaction Curve (CTM 216)
- (CR) Corrosivity Testing (CTM 643, CTM 422, CTM 417)
- (CU) Consolidated Undrained Triaxial (ASTM D 4767)
- (DS) Direct Shear (ASTM D 3080)
- (EI) Expansion Index (ASTM D 4829)
- (M) Moisture Content (ASTM D 2216)
- (OC) Organic Content-% (ASTM D 2974)
- (P) Permeability (CTM 220)
- (PA) Particle Size Analysis (ASTM D 422)
- (PI) Plasticity Index (AASHTO T 90) Liquid Limit (AASHTO T 89)
- (PL) Point Load Index (ASTM D 5731)
- (PM) Pressure Meter
- (PP) Pocket Penetrometer
- (R) R-Value (CTM 301)
- (SE) Sand Equivalent (CTM 217)
- (SG) Specific Gravity (AASHTO T 100)
- (SL) Shrinkage Limit (ASTM D 427)
- (SW) Swell Potential (ASTM D 4546)
- (TV) Pocket Torvane
- (UC) Unconfined Compression-Soil (ASTM D 2166) Unconfined Compression-Rock (ASTM D 2938)
- (UU) Unconsolidated Undrained Triaxial (ASTM D 2850)
- (UW) Unit Weight (ASTM D 4767)
- (VS) Vane Shear (AASHTO T 223)

APPARENT DENSITY OF COHESIONLESS SOILS

Description	SPT N_{60} (Blows / 12 inches)
Very loose	0 - 4
Loose	5 - 10
Medium Dense	11 - 30
Dense	31 - 50
Very Dense	> 50

MOISTURE

Description	Criteria
Dry	Absence of moisture, dusty, dry to the touch
Moist	Damp but no visible water
Wet	Visible free water, usually soil is below water table

PERCENT OR PROPORTION OF SOILS

Description	Criteria
Trace	Particles are present but estimated to be less than 5%
Few	5 to 10%
Little	15 to 25%
Some	30 to 45%
Mostly	50 to 100%

PARTICLE SIZE

Description		Size
Boulder		> 12"
Cobble		3" to 12"
Gravel	Coarse	3/4" to 3"
	Fine	No. 4 to 3/4"
Sand	Coarse	No. 10 to No. 4
	Medium	No. 40 to No. 10
	Fine	No. 200 to No. 40

CEMENTATION

Description	Criteria
Weak	Crumbles or breaks with handling or little finger pressure.
Moderate	Crumbles or breaks with considerable finger pressure.
Strong	Will not crumble or break with finger pressure.

CONSISTENCY OF COHESIVE SOILS

Description	Unconfined Compressive Strength (tsf)	Pocket Penetrometer Measurement (tsf)	Torvane Measurement (tsf)	Field Approximation
Very Soft	< 0.25	< 0.25	< 0.12	Easily penetrated several inches by fist
Soft	0.25 to 0.50	0.25 to 0.50	0.12 to 0.25	Easily penetrated several inches by thumb
Medium Stiff	0.50 to 1.0	0.50 to 1.0	0.25 to 0.50	Penetrated several inches by thumb with moderate effort
Stiff	1 to 2	1 to 2	0.50 to 1.0	Readily indented by thumb but penetrated only with great effort
Very Stiff	2 to 4	2 to 4	1.0 to 2.0	Readily indented by thumbnail
Hard	> 4.0	> 4.0	> 2.0	Indented by thumbnail with difficulty

PLASTICITY OF FINE-GRAINED SOILS

Description	Criteria
Nonplastic	A 1/8-inch thread cannot be rolled at any water content.
Low	The thread can barely be rolled and the lump cannot be formed when drier than the plastic limit.
Medium	The thread is easy to roll and not much time is required to reach the plastic limit. The thread cannot be rerolled after reaching the plastic limit. The lump crumbles when drier than the plastic limit.
High	It takes considerable time rolling and kneading to reach the plastic limit. The thread can be rerolled several times after reaching the plastic limit. The lump can be formed without crumbling when drier than the plastic limit.

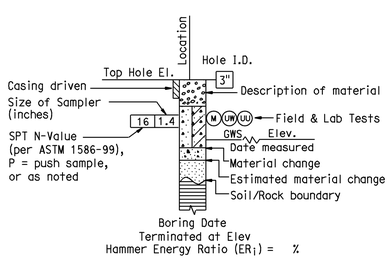

ROTARY BORING

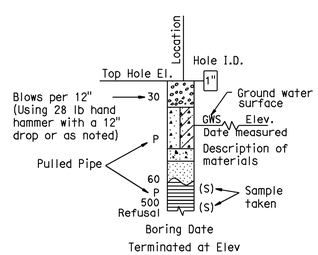

HAND BORING

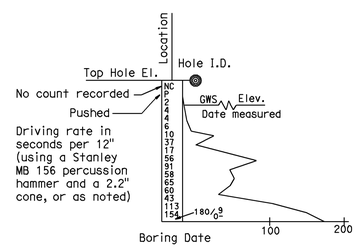

DYNAMIC CONE PENETRATION BORING

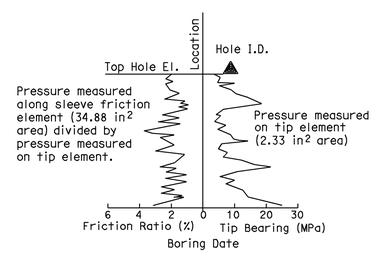

CONE PENETRATION TEST (CPT) SOUNDING

BOREHOLE IDENTIFICATION

Symbol	Hole Type	Description
Size	A	Auger Boring
Size	R P	Rotary drilled boring Rotary percussion boring (air)
Size HQ	R	Rotary drilled diamond core
Size	HD HA	Hand driven (1-inch soil tube) Hand Auger
●	D	Dynamic Cone Penetration Boring
◕	B	Hollow Stem Auger Boring (HSA)
▲	CPT	Cone Penetration Test (ASTM D 5778-95)
□	O	Other

Note: Size in inches.

Jon Hanaguchi
DESIGN OVERSIGHT Jon Hanaguchi
6-9-09
SIGN OFF DATE

DRAWN BY K. Reyes
CHECKED BY H. Nofal

R. Bethapudi
FIELD INVESTIGATION BY:
DATE

PREPARED FOR THE STATE OF CALIFORNIA DEPARTMENT OF TRANSPORTATION

Ayman Salama
PROJECT ENGINEER

BRIDGE NO. 55E0089
POST MILES 19.06

RETAINING WALL No. 614
SOIL LEGEND
LOG OF TEST BORINGS SHEET 2 OF 2

ORIGINAL SCALE IN INCHES FOR REDUCED PLANS 0 1 2 3

CU 12220
EA 0F0321

DISREGARD PRINTS BEARING EARLIER REVISION DATES
REVISION DATES (PRELIMINARY STAGE ONLY) 02/27/09 04/07/09 04/27/09 06/08/09

SHEET 21 OF 21

FILE => 55e0089-z-1tb02.dgn

USERNAME => trlenard DATE PLOTTED => 25-JAN-2010 TIME PLOTTED => 08:37

DIST	COUNTY	ROUTE	POST MILES TOTAL PROJECT	SHEET No	TOTAL SHEETS
12	Ora	57	18.4/20.9	705	856

Milind Desai 06/08/09
REGISTERED CIVIL ENGINEER DATE

1-25-10
PLANS APPROVAL DATE

REGISTERED PROFESSIONAL ENGINEER MILIND R. DESAI No. C51437 Exp. 6/30/10 CIVIL STATE OF CALIFORNIA

The State of California or its officers or agents shall not be responsible for the accuracy or completeness of electronic copies of this plan sheet.

OCTA
550 S. MAIN STREET
ORANGE, CA 92863

CH2M HILL
6 HUTTON CENTRE DRIVE, SUITE 700
SANTA ANA, CA 92707

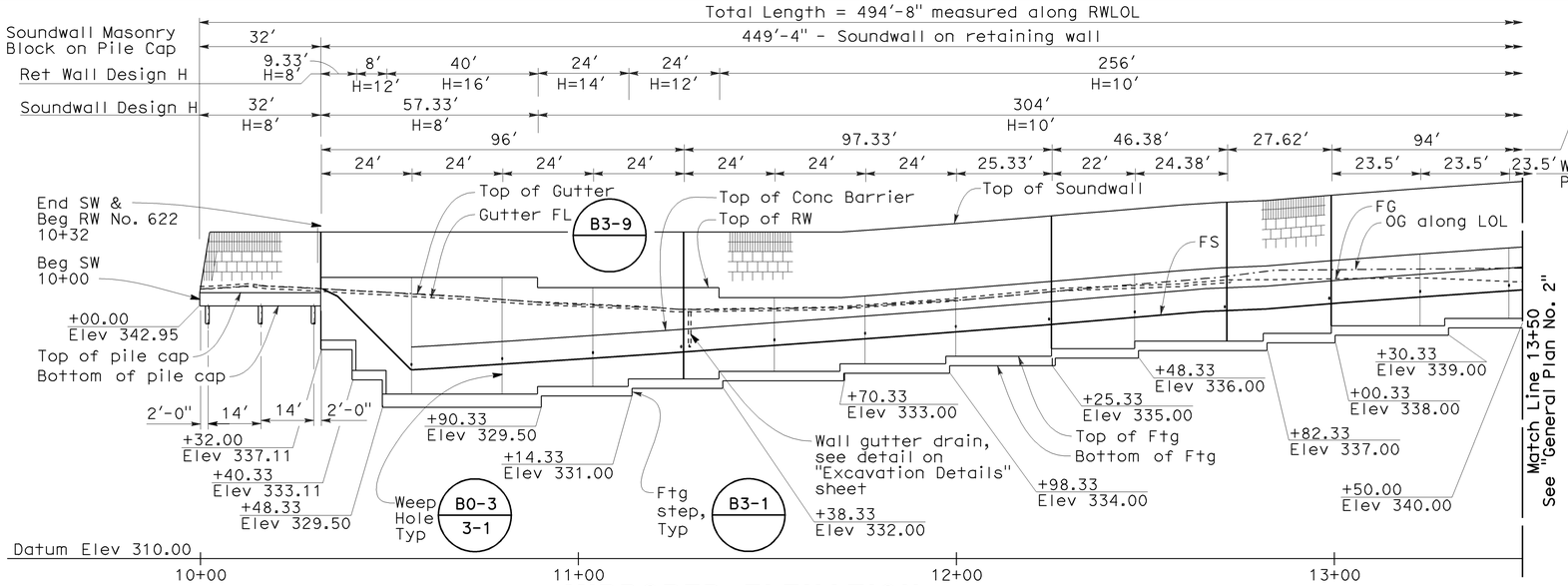

MIRRORED ELEVATION

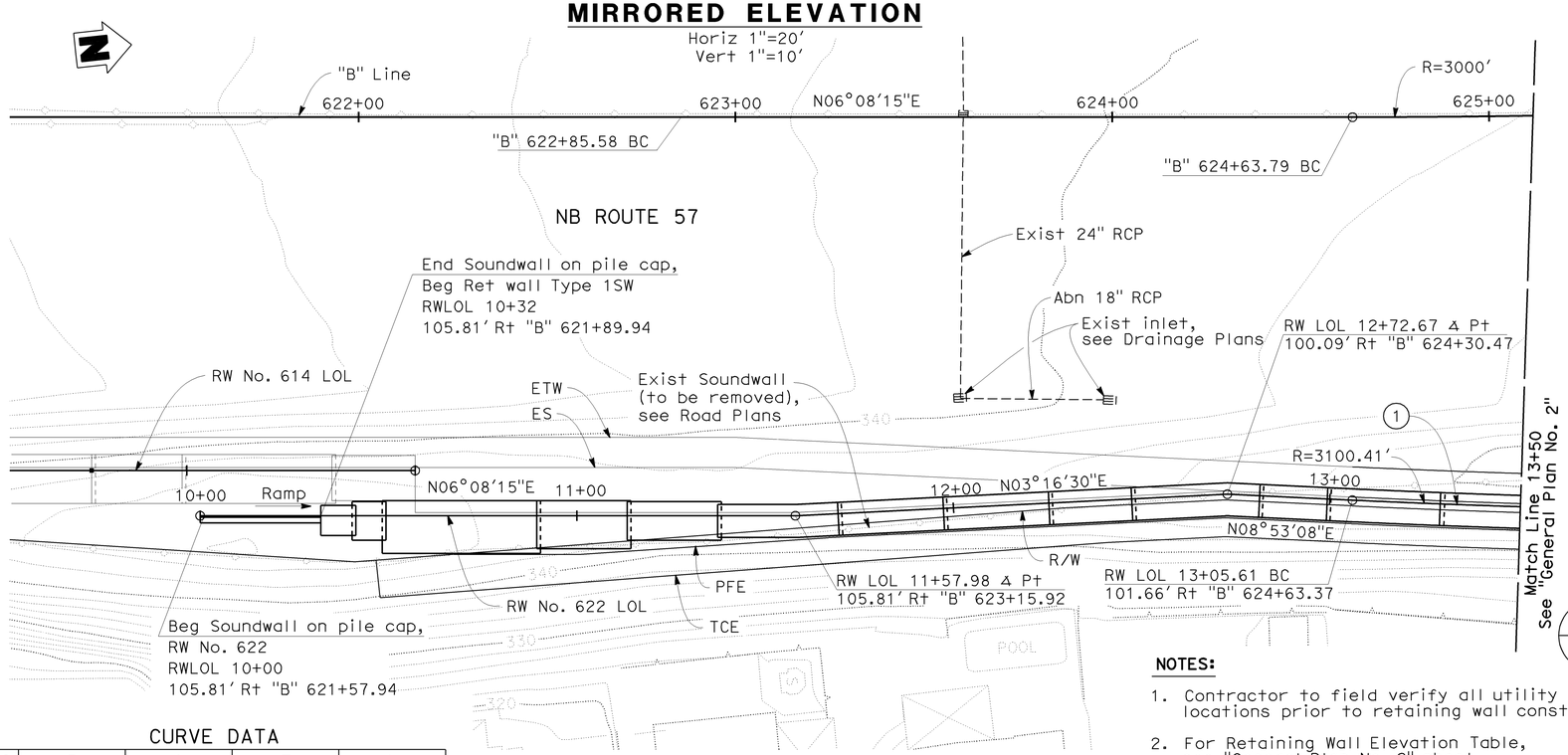

PLAN
1"=20'

CURVE DATA

NO	R	Δ	T	L
1	3100.41'	01°39'14"	44.75'	89.50'
2	3105.81'	01°35'26"	43.11'	86.21'
3	3106.50'	00°14'46"	6.67'	13.34'

INDEX TO PLANS

SHEET NO.	TITLE
1.	GENERAL PLAN NO. 1
2.	GENERAL PLAN NO. 2
3.	TYPICAL SECTIONS
4.	EXCAVATION DETAILS
5.	RETAINING WALL DETAILS NO. 1
6.	RETAINING WALL DETAILS NO. 2
7.	OVERHEAD SIGN PEDESTAL DETAILS
8.	SOUNDWALL ON RETAINING WALL-MASONRY BLOCK - DETAILS NO. 1
9.	SOUNDWALL ON RETAINING WALL-MASONRY BLOCK - DETAILS NO. 2
10	SOUNDWALL - MASONRY BLOCK WITH BARRIER ON RETAINING WALL-DETAILS NO. 1
11.	SOUNDWALL - MASONRY BLOCK WITH BARRIER ON RETAINING WALL-DETAILS NO. 2
12.	SOUNDWALL MASONRY BLOCK MISCELLANEOUS DETAILS
13.	ARCHITECTURAL TREATMENT DETAILS
14.	LOG OF TEST BORINGS SHEET 1 OF 4
15.	LOG OF TEST BORINGS SHEET 2 OF 4
16.	LOG OF TEST BORINGS SHEET 3 OF 4
17.	LOG OF TEST BORINGS SHEET 4 OF 4

STANDARD PLANS DATED MAY 2006

A10A	ACRONYMS AND ABBREVIATIONS (SHEET 1 OF 2)
A10B	ACRONYMS AND ABBREVIATIONS (SHEET 2 OF 2)
A10C	SYMBOLS (SHEET 1 OF 2)
A10D	SYMBOLS (SHEET 2 OF 2)
A62B	LIMITS OF PAYMENT FOR EXCAVATION AND BACKFILL BRIDGE SURCHARGE AND WALL
A76A	CONCRETE BARRIER TYPE 60
B0-3	BRIDGE DETAILS
B3-1	RETAINING WALL TYPE 1 H=4' THROUGH 30'
B3-8	RETAINING WALL DETAILS NO. 1
B3-9	RETAINING WALL DETAILS NO. 2
B11-56	CONCRETE BARRIER TYPE 736
B15-3	SOUNDWALL MASONRY BLOCK ON PILE CAP DETAILS NO. 1
B15-4	SOUNDWALL MASONRY BLOCK ON PILE CAP DETAILS NO. 2
B15-5	SOUNDWALL MASONRY BLOCK ON PILE CAP DETAILS NO. 3
S2	OVERHEAD SIGNS - TRUSS, SINGLE POST TYPE - POST TYPES II THRU IX
S3	OVERHEAD SIGNS - TRUSS, SINGLE POST TYPE - BASE PLATE AND ANCHORAGE DETAILS

Standard Plan Sheet No.
Detail No.

NOTES:

1. Contractor to field verify all utility locations prior to retaining wall construction.
2. For Retaining Wall Elevation Table, see "General Plan No. 2" sheet.
3. For Typical Sections, see "Typical Sections" sheet
4. For Drainage System & Details, see Drainage Plans.

RETAINING WALL NO 622 QUANTITIES

STRUCTURE EXCAVATION (RETAINING WALL)	1,970	CY
STRUCTURE EXCAVATION (TYPE Y-1) (AERIALLY DEPOSITED LEAD)	110	CY
STRUCTURE BACKFILL (RETAINING WALL)	1,960	CY
18" CAST-IN-DRILLED-HOLE CONCRETE PILING	22	LF
STRUCTURAL CONCRETE, RETAINING WALL	598	CY
MINOR CONCRETE (SOUND WALL)	4	CY
FORMED RELIEF TEXTURE (FLOWERED PATTERN)	1,370	SQFT
FRACTURED RIB TEXTURE	1,370	SQFT
SOUND WALL (BARRIER)(MASONRY BLOCK)	196	SQFT
SOUND WALL (MASONRY BLOCK)	4,307	SQFT
BAR REINFORCING STEEL (RETAINING WALL)	63,500	LB
MINOR CONCRETE (MISCELLANEOUS CONSTRUCTION)	15	CY
CONCRETE BARRIER (TYPE 60D)	433	LF
CONCRETE BARRIER (TYPE 736 MODIFIED)	13	LF

Jon Hamaguchi
DESIGN OVERSIGHT Jon Hamaguchi
12-17-09
SIGN OFF DATE

	BY	CHECKED				
DESIGN	M. Desai / J. Powell	M. Atiqullah / A. Issa	LRFD	LIVE LOADING: HL-93 AND PERMIT (P-15) DESIGN LOAD		
DETAILS	J. Powell	M. Atiqullah / A. Issa	LAYOUT	N. Morales	CHECKED	M. Atiqullah
QUANTITIES	Y. Chiu	L. Ros	SPECIFICATIONS	M. Remolador	PLANS AND SPECS COMPARED	M. Atiqullah

PREPARED FOR THE STATE OF CALIFORNIA DEPARTMENT OF TRANSPORTATION

Ayman Salama
PROJECT ENGINEER

CU 12220
EA 0F0321

BRIDGE NO. 55E0090
POST MILES 19.24

RETAINING WALL NO. 622
GENERAL PLAN NO. 1

DESIGN GENERAL PLAN SHEET (ENGLISH) (REV. 2/25/05)

ORIGINAL SCALE IN INCHES FOR REDUCED PLANS 0 1 2 3

DISREGARD PRINTS BEARING EARLIER REVISION DATES

REVISION DATES (PRELIMINARY STAGE ONLY) 02/18/09 04/07/09 04/17/09 06/08/09

SHEET 1 OF 17

FILE => 55e0090-a-gp01.dgn

USERNAME => rfriehard DATE PLOTTED => 25-JAN-2010 TIME PLOTTED => 08:37

DIST	COUNTY	ROUTE	POST MILES TOTAL PROJECT	SHEET No	TOTAL SHEETS
12	Ora	57	18.4/20.9	706	856

Milind Desai
REGISTERED CIVIL ENGINEER 06/08/09
DATE

1-25-10
PLANS APPROVAL DATE

REGISTERED PROFESSIONAL ENGINEER MILIND R. DESAI No. C51437 Exp. 6/30/10 CIVIL STATE OF CALIFORNIA

The State of California or its officers or agents shall not be responsible for the accuracy or completeness of electronic copies of this plan sheet.

OCTA
550 S. MAIN STREET
ORANGE, CA 92863

CH2M HILL
6 HUTTON CENTRE DRIVE, SUITE 700
SANTA ANA, CA 92707

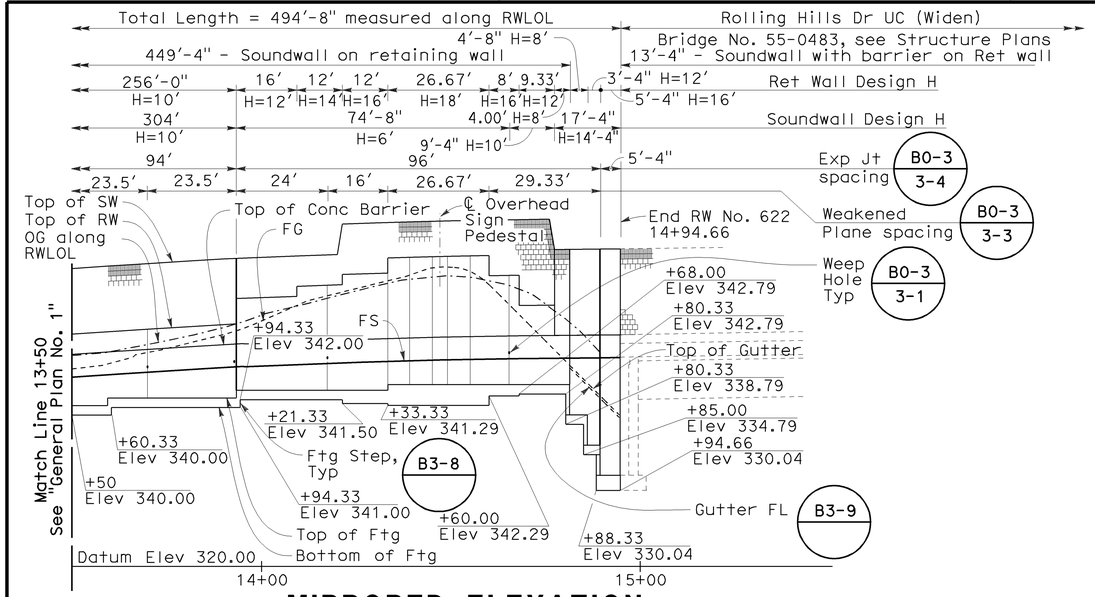

MIRRORED ELEVATION

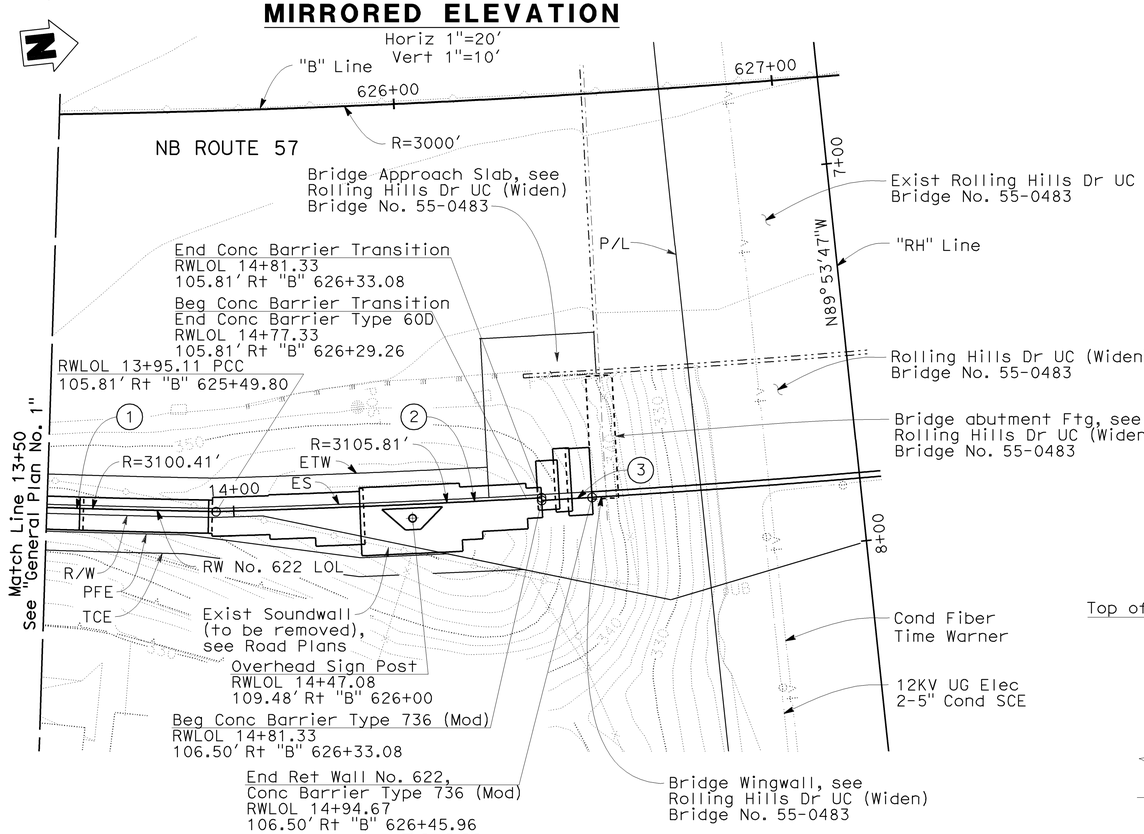

PLAN
1"=20'

RETAINING WALL ELEVATIONS

RW LOL STA	TOP OF WALL (1)	TOP OF WALL (2)	TOP OF SOUNDWALL
10+00	-	-	352.63
10+10	-	-	352.63
10+20	-	-	352.63
10+32	346.63	-	352.63
10+40	346.63	-	352.63
10+50	346.63	-	352.63
10+60	346.63	-	352.63
10+70	346.63	-	352.63
10+80	346.63	-	352.63
10+89.33	346.63	345.30	-
10+90			352.63
11+00	345.30	-	352.63
11+10	345.30	-	352.63
11+20	345.30	-	352.63
11+30	345.30	-	352.63
11+37.33	345.30	343.97	-
11+40	-	-	352.63
11+50	343.97	-	352.63
11+60	343.97	-	352.63
11+69.33	343.97	-	352.63
11+80	344.35	-	353.02
11+90	344.73	-	353.40
12+00	345.11	-	353.78
12+10	345.51	-	354.18
12+20	345.91	-	354.58
12+30	346.32	-	354.99
12+40	346.74	-	355.40
12+50	347.16	-	355.82
12+60	347.58	-	356.25
12+70	347.91	-	356.58

RETAINING WALL ELEVATIONS

RW LOL STA	TOP OF WALL (1)	TOP OF WALL (2)	TOP OF SOUNDWALL
12+82.18	348.17	-	356.83
12+90	348.48	-	357.15
13+00	348.88	-	357.55
13+10	349.26	-	357.93
13+20	349.64	-	358.30
13+30	349.99	-	358.66
13+40	350.34	-	359.01
13+50	350.68	-	359.35
13+60	351.01	-	359.68
13+70	351.33	-	360.00
13+80	351.64	-	360.31
13+90	-	-	360.61
13+93.33	352.04	355.38	-
14+00	-	-	360.80
14+09.33	355.66	356.99	-
14+10	-	-	361.00
14+19.76	-	-	361.19
14+21.33	357.22	358.55	365.89
14+30	-	-	366.03
14+33.33	358.75	360.75	-
14+40	360.84	-	366.17
14+50	360.96	-	366.30
14+60	358.39	361.06	365.72
14+68	354.46	358.46	365.78
14+73.33			365.82
14+74.66			361.82
14+77.33	350.51	354.51	
14+80	-	-	361.85
14+81.33	347.54	-	361.87
14+90	347.58	-	361.91
14+94.66	347.60	-	361.93

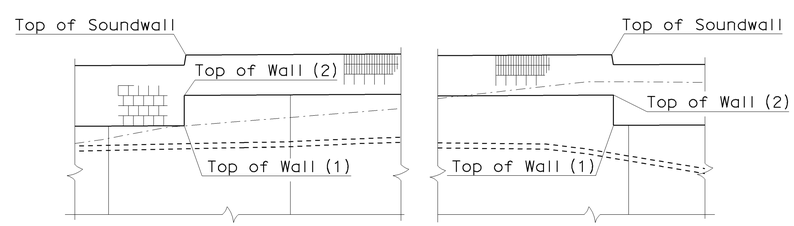

LOCATION OF WALL ELEVATION
No scale

NOTES:

1. For Notes and Curve data, see "General Plan No. 1" sheet.
2. For Typical Sections, see "Typical Sections" sheet.
3. For Drainage System & Details, see Drainage Plans.

DESIGN OVERSIGHT Jon Hamaguchi 12-17-09 SIGN OFF DATE	DESIGN	BY M. Desai / J. Powell	CHECKED M. Atiqullah / A. Issa	LRFD	LIVE LOADING: HL-93 AND PERMIT (P-15) DESIGN LOAD
	DETAILS	BY J. Powell	CHECKED M. Atiqullah / A. Issa	LAYOUT	BY N. Morales / CHECKED M. Atiqullah
	QUANTITIES	BY Y. Chiu	CHECKED L. Ros	SPECIFICATIONS	BY M. Remolador / PLANS AND SPECS COMPARED M. Atiqullah

DESIGN GENERAL PLAN SHEET (ENGLISH) (REV. 2/25/05)

ORIGINAL SCALE IN INCHES FOR REDUCED PLANS 0 1 2 3

PREPARED FOR THE STATE OF CALIFORNIA DEPARTMENT OF TRANSPORTATION

Ayman Salama
PROJECT ENGINEER

CU 12220
EA 0F0321

BRIDGE NO. 55E0090
POST MILES 19.24

RETAINING WALL NO. 622
GENERAL PLAN NO. 2

DISREGARD PRINTS BEARING EARLIER REVISION DATES

REVISION DATES (PRELIMINARY STAGE ONLY) 02/18/09 04/07/09 04/17/09 06/08/09

SHEET 2 OF 17

FILE => 55e0090-a-gp02.dgn

USERNAME => friehard DATE PLOTTED => 25-JAN-2010 TIME PLOTTED => 08:37

DIST	COUNTY	ROUTE	POST MILES TOTAL PROJECT	SHEET No	TOTAL SHEETS
12	Ora	57	18.4/20.9	707	856

Milind Desai 06/08/09
REGISTERED CIVIL ENGINEER DATE

1-25-10
PLANS APPROVAL DATE

REGISTERED PROFESSIONAL ENGINEER MILIND R. DESAI No. C51437 Exp. 6/30/10 CIVIL STATE OF CALIFORNIA

The State of California or its officers or agents shall not be responsible for the accuracy or completeness of electronic copies of this plan sheet.

OCTA
550 S. MAIN STREET
ORANGE, CA 92863

CH2M HILL
6 HUTTON CENTRE DRIVE, SUITE 700
SANTA ANA, CA 92707

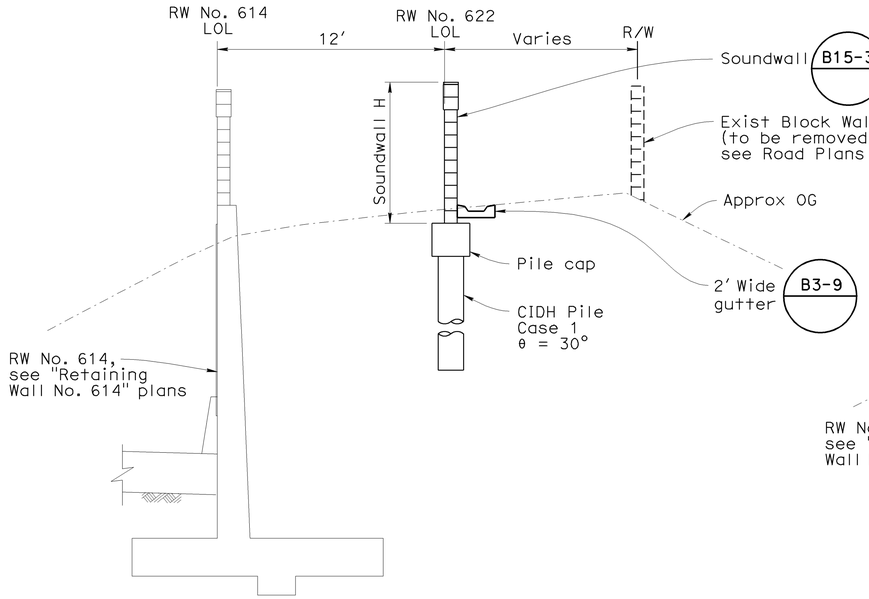

TYPICAL SECTION
1/4"=1'-0"
Sta 10+00 to 10+32

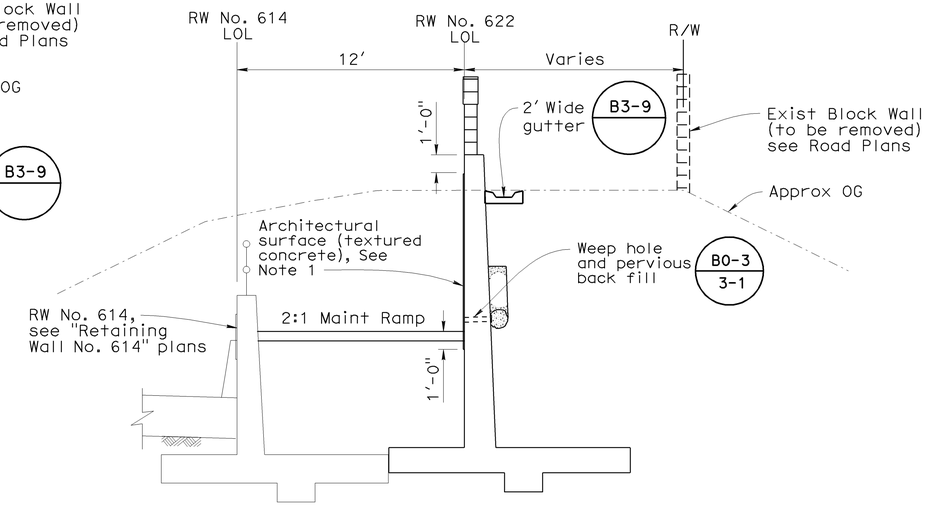

TYPICAL SECTION
1/4"=1'-0"
Sta 10+32 to 10+56

NOTE:
1. For Architectural Surface (Textured Concrete) and Fractured Rib Texture details, see" Architectural Treatment Details" sheet.

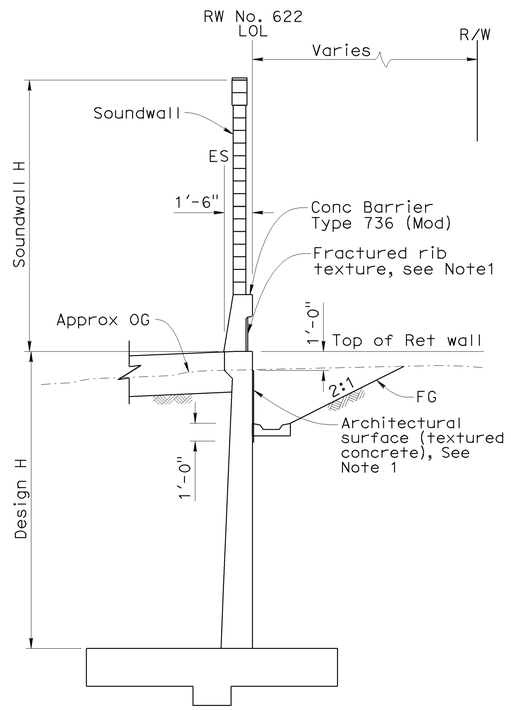

TYPICAL SECTION
1/4"=1'-0"
Sta 14+81.33 to 14+94.66

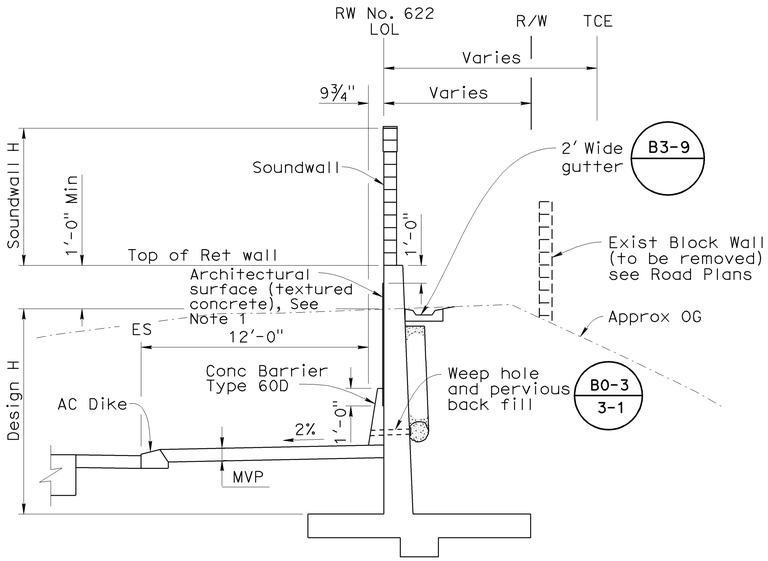

TYPICAL SECTION
1/4"=1'-0"
Sta 10+56 to 12+72.77

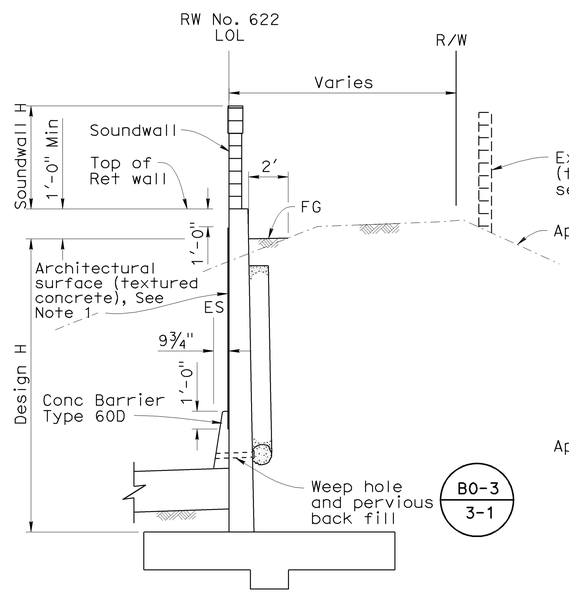

TYPICAL SECTION
1/4"=1'-0"
Sta 12+72.77 to 14+77.33

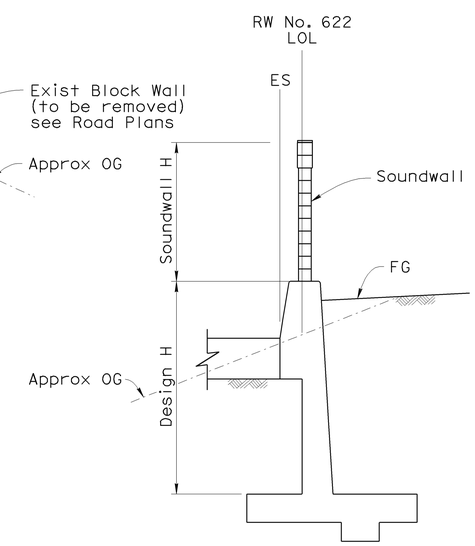

TYPICAL SECTION
1/4"=1'-0"
Sta 14+77.33 to 14+81.33

DESIGN	BY M. Desai / J. Powell	CHECKED M. Atiqullah / A. Issa	
DETAILS	BY J. Powell	CHECKED M. Atiqullah / A. Issa	
QUANTITIES	BY Y. Chiu	CHECKED L. Ros	

DESIGN OVERSIGHT Jon Hamaguchi
12-17-09
SIGN OFF DATE

PREPARED FOR THE STATE OF CALIFORNIA DEPARTMENT OF TRANSPORTATION

Ayman Salama
PROJECT ENGINEER

BRIDGE NO. 55E0090
POST MILE 19.24

RETAINING WALL NO. 622
TYPICAL SECTIONS

DESIGN DETAIL SHEET (ENGLISH) (REV. 2/25/05)

ORIGINAL SCALE IN INCHES FOR REDUCED PLANS 0 1 2 3

CU 12220
EA 0F0321

DISREGARD PRINTS BEARING EARLIER REVISION DATES

REVISION DATES (PRELIMINARY STAGE ONLY) 02/18/09 04/07/09 04/17/09 06/08/09

SHEET 3 OF 17

FILE => 55e0090-a-ts01.dgn

USERNAME => trhenord DATE PLOTTED => 25-JAN-2010 TIME PLOTTED => 08:37

DIST	COUNTY	ROUTE	POST MILES TOTAL PROJECT	SHEET No	TOTAL SHEETS
12	Ora	57	18.4/20.9	708	856

REGISTERED CIVIL ENGINEER 06/08/09 DATE

1-25-10
PLANS APPROVAL DATE

REGISTERED PROFESSIONAL ENGINEER
MOHAMMED ATIQULLAH
No. C47027
Exp. 12/31/09
CIVIL
STATE OF CALIFORNIA

The State of California or its officers or agents shall not be responsible for the accuracy or completeness of electronic copies of this plan sheet.

OCTA
550 S. MAIN STREET
ORANGE, CA 92863

CH2M HILL
6 HUTTON CENTRE DRIVE, SUITE 700
SANTA ANA, CA 92707

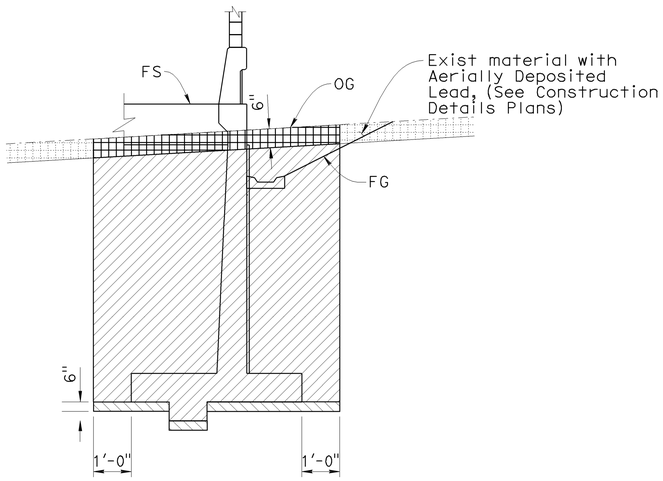

IN FILL

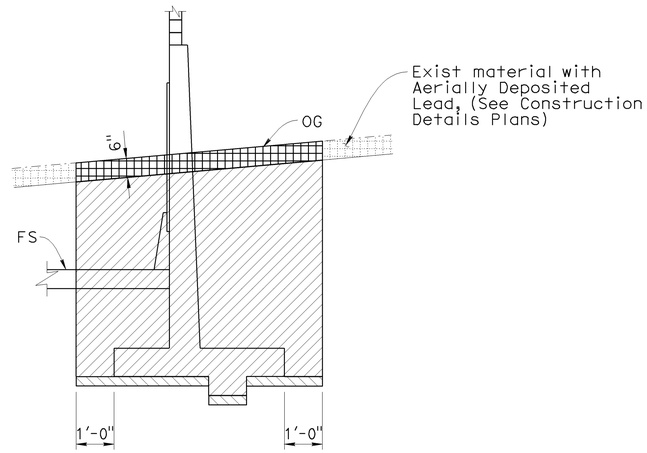

IN CUT

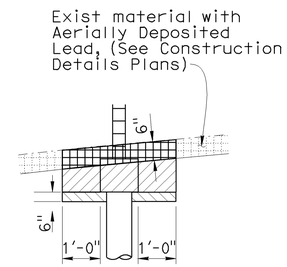

IN CUT

LIMITS OF PAYMENT OF EXCAVATION FOR RETAINING WALL

No Scale

Note:
For Backfill see Caltrans Standard Plans

LEGEND

- Indicates Structure Excavation (Type Y-1) (Aerially Deposited Lead)
- Structure Excavation (Retaining Wall)
- Structure Overexcavation (From Sta 10+32.00 to 14+94.66 only)

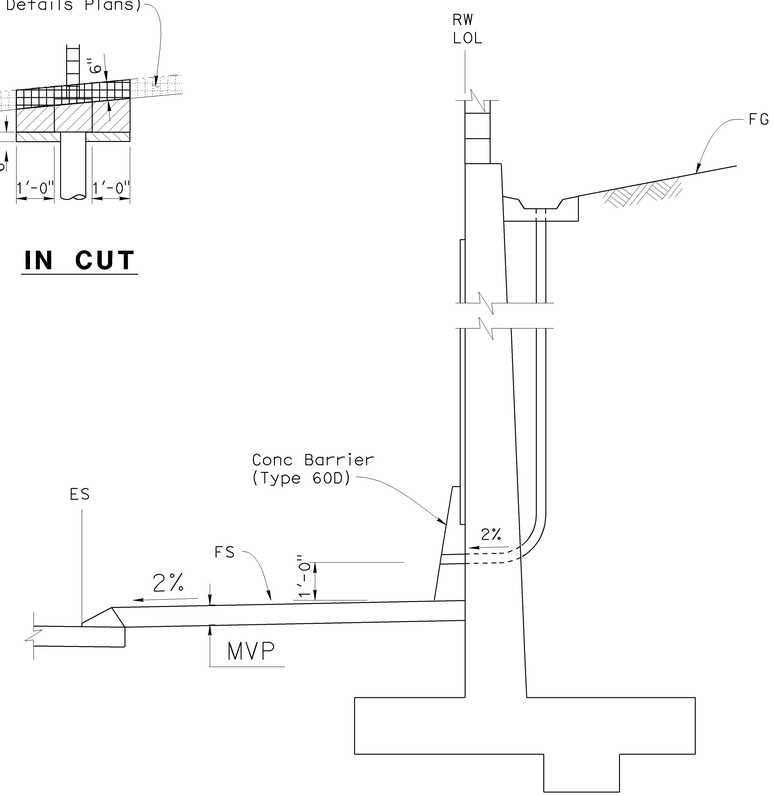

WALL GUTTER DRAIN DETAIL

No Scale

DESIGN OVERSIGHT Jon Hamaguchi
12-17-09
SIGN OFF DATE

DESIGN	BY M. Atiqullah	CHECKED E. Cutler
DETAILS	BY A. Issa	CHECKED E. Cutler
QUANTITIES	BY Y. Chiu	CHECKED L. Ros

PREPARED FOR THE STATE OF CALIFORNIA DEPARTMENT OF TRANSPORTATION

Ayman Salama
PROJECT ENGINEER

BRIDGE NO. 55E0090
POST MILE 19.24

RETAINING WALL NO. 622
EXCAVATION DETAILS

DESIGN DETAIL SHEET (ENGLISH) (REV. 2/25/05)

ORIGINAL SCALE IN INCHES FOR REDUCED PLANS 0 1 2 3

CU 12220
EA 0F0321

DISREGARD PRINTS BEARING EARLIER REVISION DATES

REVISION DATES (PRELIMINARY STAGE ONLY) 06/08/09

SHEET 4 OF 17

FILE => 55e0090-b-exc.dgn

USERNAME => ttienord DATE PLOTTED => 25-JAN-2010 TIME PLOTTED => 08:37

DIST	COUNTY	ROUTE	POST MILES TOTAL PROJECT	SHEET No	TOTAL SHEETS
12	Ora	57	18.4/20.9	709	856

Milind Desai 06/08/09
REGISTERED CIVIL ENGINEER DATE

1-25-10
PLANS APPROVAL DATE

REGISTERED PROFESSIONAL ENGINEER MILIND R. DESAI No. C51437 Exp. 6/30/10 CIVIL STATE OF CALIFORNIA

The State of California or its officers or agents shall not be responsible for the accuracy or completeness of electronic copies of this plan sheet.

OCTA
550 S. MAIN STREET
ORANGE, CA 92863

CH2M HILL
6 HUTTON CENTRE DRIVE, SUITE 700
SANTA ANA, CA 92707

GENERAL NOTES

1. For soundwall and retaining wall architectural finish or texture, see details elsewhere in project plans.
2. For details not shown and drainage notes, see B3-8
3. Footing cover, 1'-6" minimum.
4. Limit of no splicing rebars = 3 times the bottom thickness of the stem.
5. Placement of reinforcements :
   ⓑ & ⓒ bars are spliced together.
   ✕✕ Alternate ⓐ & ⓑ bars are shown in "Detail B".
   Cont = Continuous.
6. For Soundwall & Barrier reinforcement, see "Soundwall Masonry Block on Barriers" sheets in Standard Plans.

STATION 10+32 TO 14+81.33

TABLE OF REINFORCING STEEL DIMENSIONS AND DATA

Design H	8'	10'	12'	14'	16'	18'
W	8'-0"	8'-9"	10'-3"	12'-9"	14'-0"	18'-0"
C	2'-9"	3'-0"	3'-9"	4'-0"	4'-0"	5'-0"
B	5'-3"	5'-9"	6'-6"	8'-9"	10'-0"	13'-0"
F Spread footing	1'-3"	1'-3"	1'-3"	1'-3"	1'-9"	2'-9"
Batter	½:12	½:12	½:12	½:12	½:12	½:12
Stem thickn. @ Haunch	1'-0"	1'-0"	1'-0"	1'-0"	1'-0"	1'-0"
ⓐ Bars			#6 @16✕✕	#7 @12✕✕	#9 @14✕✕	#10@18✕✕
X			Cont	Cont	Cont	Cont
Y			8'-0"	6'-6"	7'-6"	8'-6"
ⓑ Bars	#5 @12	#5 @ 8	#6 @16✕✕	#7 @12✕✕	#9 @14✕✕	#10@18✕✕
X	Cont	Cont	Cont	Cont	Cont	Cont
Y	Cont	Cont	Cont	10'-6"	13'-0"	15'-0"
ⓒ Bars				#6 @12	#7 @14	#6 @18
ⓓ Bars	#5 @12	#5 @12	#5 @ 8	#6 @ 6	#7 @ 7	#9 @ 9
Ultimate Bearing Capacity Req'd k/sf	4.9	7.3	7.5	9.6	11.6	6.0

STATION 14+81.33 TO 14+94.66

TABLE OF REINFORCING STEEL DIMENSIONS AND DATA

Design H	8'	12'	16'	
W	9'-9"	12'-9"	13'-3"	
C	3'-3"	4'-0"	4'-6"	
B	6'-6"	8'-9"	8'-9"	
F Spread footing	1'-3"	1'-3"	2'-0"	
Batter	½:12	½:12	½:12	
Stem thickn. @ Haunch	1'-0"	1'-0"	1'-0"	
ⓐ Bars	#6 @16✕✕	#6 @12✕✕	#9 @16✕✕	
X	Cont	Cont	Cont	
Y	8'-0"	6'-6"	8'-6"	
ⓑ Bars	#6 @16✕✕	#6 @12✕✕	#9 @16✕✕	
X	Cont	Cont	Cont	
Y	Cont	10'-6"	15'-0"	
ⓒ Bars		#6 @12	#6 @16	
ⓓ Bars	#5 @ 8	#6 @ 6	#7 @ 8	
Ultimate Bearing Capacity Req'd k/sf	9.0	5.1	14.4	

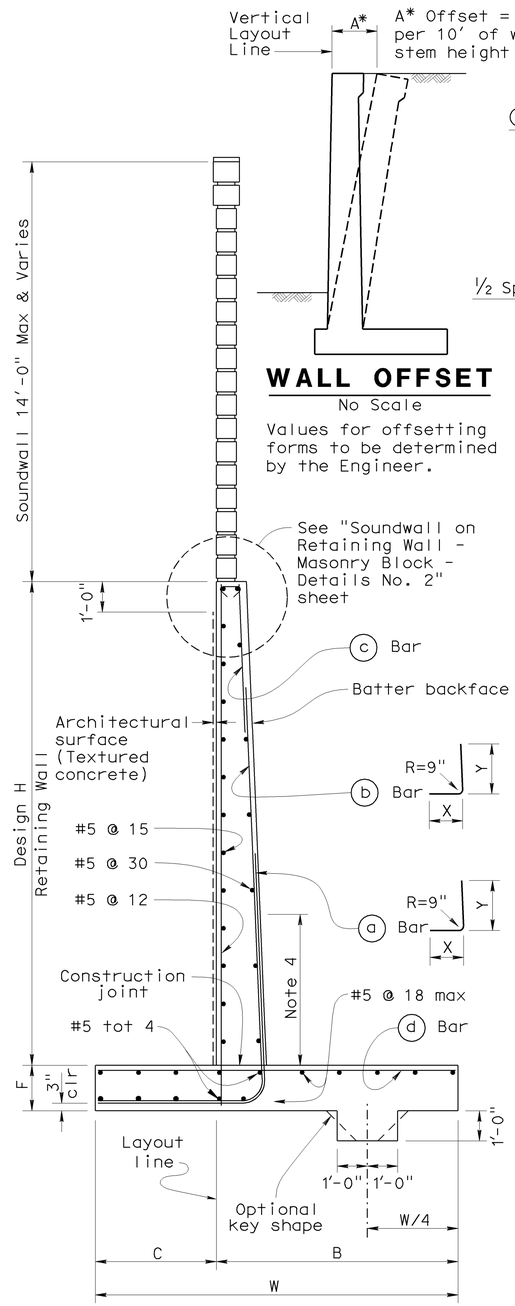

WALL OFFSET

No Scale

Values for offsetting forms to be determined by the Engineer.

SPREAD FOOTING SECTION (SOUNDWALL ON RETAINING WALL)

No Scale

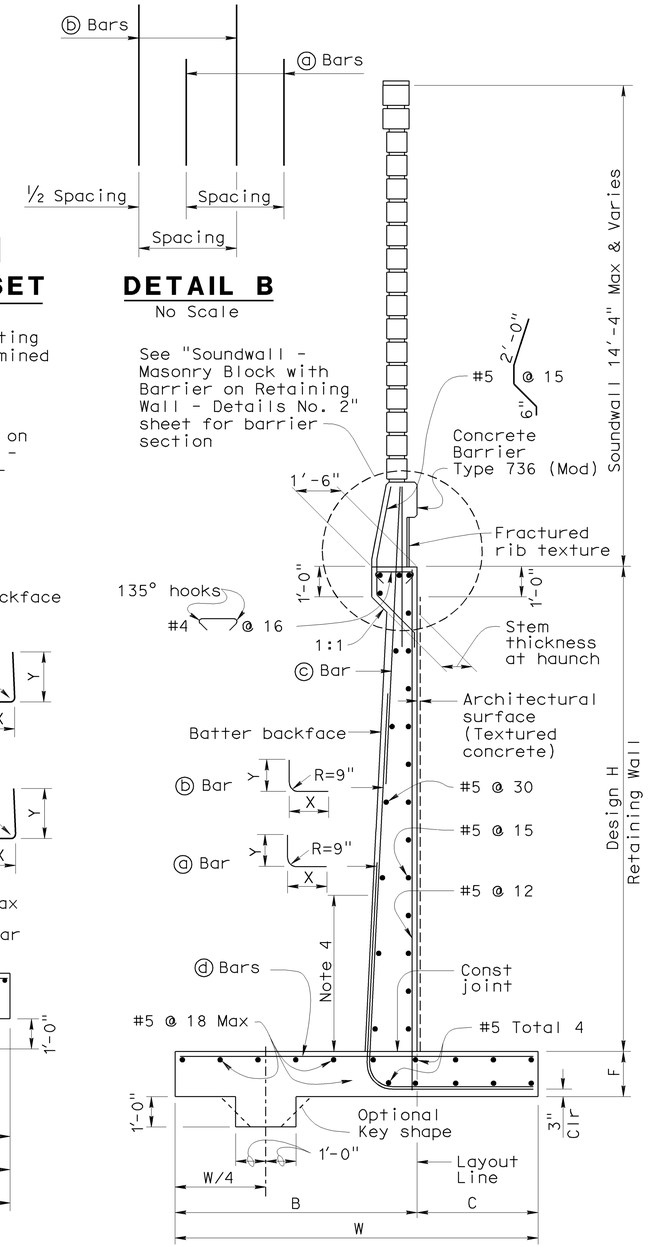

SPREAD FOOTING SECTION (SOUNDWALL WITH BARRIER ON RETAINING WALL)

No Scale

DESIGN DATA

DESIGN: Load Factor Design (LFD)

CONCRETE: Reinforced Concrete, f'c = 3600 psi
fy = 60,000 psi

LOADING CASE:
Case 1: Level ground with 240 psf surcharge and Soundwall
Case 2: 2:1Sloping ground and Soundwall

Seismic Load = 0.57 Dead Load
Wind Load = 33 psf

SEISMIC LOAD: SOIL
Kh = 0.3g
Kv = 0.0
Kae : Mononobe-Okabe Method

SOIL: $\emptyset$ = 34° γ = 120 pcf
Equivalent fluid pressure:
= 36 pcf for determination of toe pressure
= 27 pcf for determination of heel pressure

EXTERNAL STABILITY:
Group 1 : D + E + SC
Group 2 : D + E + SC + W
Group 3 : D + PYM

INTERNAL STABILITY (LFD):
Group A : βD + 1.7E + 1.7SC
Group B : βD + 1.7E + 1.3W
Group C (stem) : 1.0D + 1.0E + 1.0EQD + 1.0EQE
Group C (footing) : D + PYM

Where : β = 1.0 or 1.3 whichever controls design
D = Dead Load
E = Lateral Earth Pressure
SC = Surcharge
W = Wind load
EQD = Seismic Dead Load
EQE = Seismic Lateral Earth Pressure
PYM = Probable Yield Moment (1.3 x Nominal Yield Moment of Stem)

Jan Hamaguchi
DESIGN OVERSIGHT Jan Hamaguchi
11-24-09
SIGN OFF DATE

	BY	CHECKED
DESIGN	M. Desai / J. Powell	M. Atiqullah / A. Issa
DETAILS	J. Powell	M. Atiqullah / A. Issa
QUANTITIES	Y. Chiu	L. Ros

PREPARED FOR THE STATE OF CALIFORNIA DEPARTMENT OF TRANSPORTATION

Ayman Salama
PROJECT ENGINEER

BRIDGE NO. 55E0090
POST MILE 19.24

RETAINING WALL NO. 622
RETAINING WALL DETAILS NO. 1

DESIGN DETAIL SHEET (ENGLISH) (REV. 2/25/05)

ORIGINAL SCALE IN INCHES FOR REDUCED PLANS 0 1 2 3

CU 12220
EA 0F0321

DISREGARD PRINTS BEARING EARLIER REVISION DATES

REVISION DATES (PRELIMINARY STAGE ONLY) 02/26/09 04/07/09 04/27/09 06/08/09

SHEET 5 OF 17

FILE => 55e0090-f-d01.dgn

USERNAME => trienard DATE PLOTTED => 25-JAN-2010 TIME PLOTTED => 08:37

DIST	COUNTY	ROUTE	POST MILES TOTAL PROJECT	SHEET No	TOTAL SHEETS
12	Ora	57	18.4/20.9	710	856

Milind Desai 06/08/09
REGISTERED CIVIL ENGINEER DATE

1-25-10
PLANS APPROVAL DATE

REGISTERED PROFESSIONAL ENGINEER MILIND R. DESAI No. C51437 Exp. 6/30/10 CIVIL STATE OF CALIFORNIA

The State of California or its officers or agents shall not be responsible for the accuracy or completeness of electronic copies of this plan sheet.

OCTA
550 S. MAIN STREET
ORANGE, CA 92863

CH2M HILL
6 HUTTON CENTRE DRIVE, SUITE 700
SANTA ANA, CA 92707

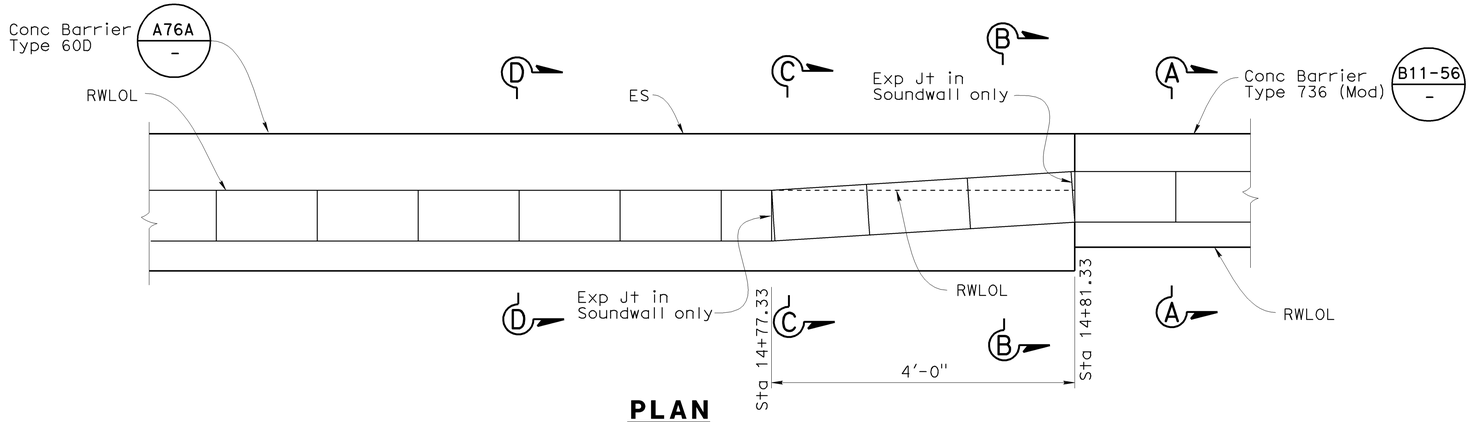

PLAN
1"=1'-0"

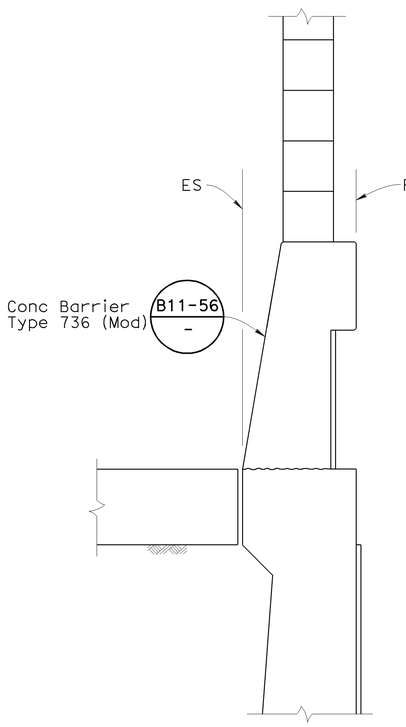

SECTION A-A

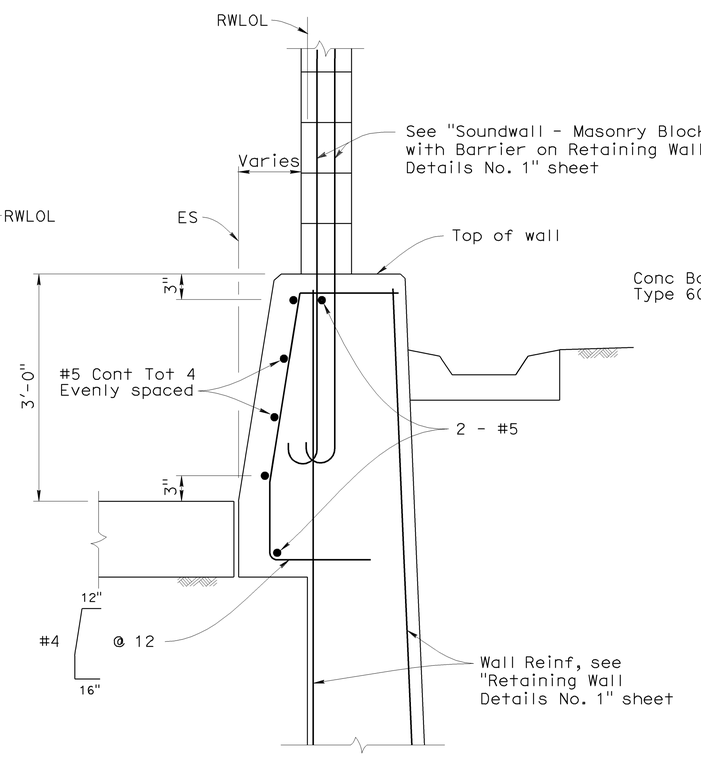

SECTION B-B

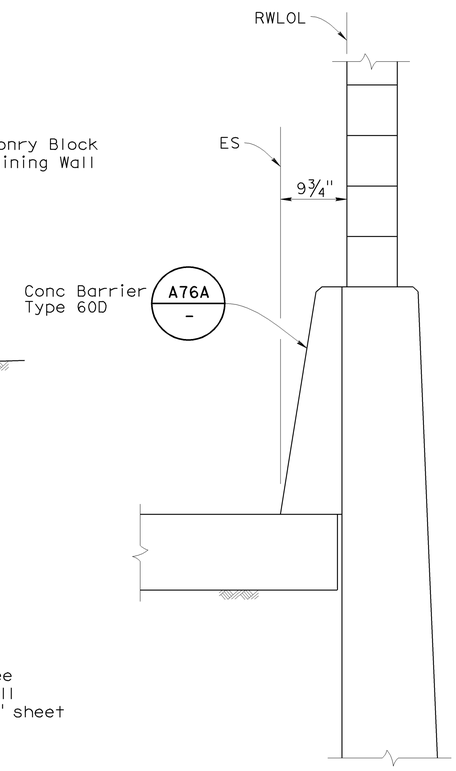

SECTION C-C

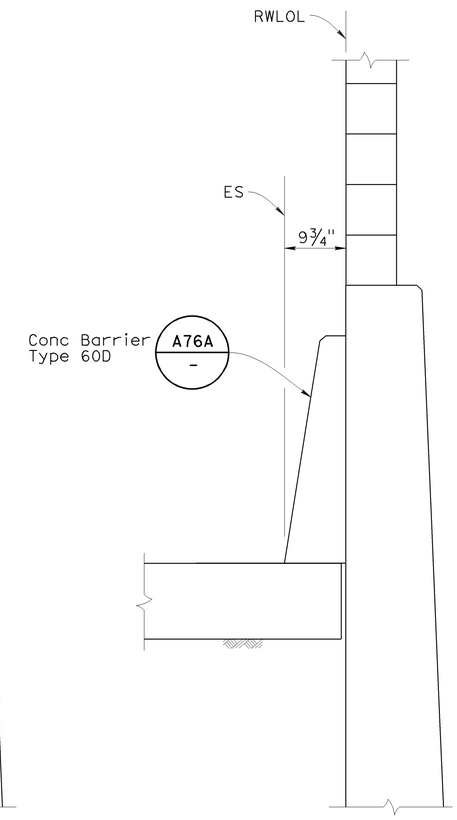

SECTION D-D

CONCRETE BARRIER TRANSITION DETAIL
1"=1'-0"

Jon Hamaguchi
DESIGN OVERSIGHT Jon Hamaguchi
11-24-09
SIGN OFF DATE

	BY	CHECKED
DESIGN	M. Desai / J. Powell	M. Atiqullah / A. Issa
DETAILS	J. Powell	M. Atiqullah / A. Issa
QUANTITIES	Y. Chiu	L. Ros

PREPARED FOR THE STATE OF CALIFORNIA DEPARTMENT OF TRANSPORTATION

Ayman Salama
PROJECT ENGINEER

BRIDGE NO. 55E0090
POST MILE 19.24

RETAINING WALL NO. 622
RETAINING WALL DETAILS NO. 2

DESIGN DETAIL SHEET (ENGLISH) (REV. 2/25/05)

ORIGINAL SCALE IN INCHES FOR REDUCED PLANS 0 1 2 3

CU 12220
EA 0F0321

DISREGARD PRINTS BEARING EARLIER REVISION DATES
REVISION DATES (PRELIMINARY STAGE ONLY) 02/18/09 04/07/09 04/17/09 06/08/09

SHEET 6 OF 17

FILE => 55e0090-f-d02.dgn

USERNAME => friehard DATE PLOTTED => 25-JAN-2010 TIME PLOTTED => 08:37

DIST	COUNTY	ROUTE	POST MILES TOTAL PROJECT	SHEET No	TOTAL SHEETS
12	Ora	57	18.4/20.9	711	856

Milind Desai 06/08/09
REGISTERED CIVIL ENGINEER DATE

1-25-10
PLANS APPROVAL DATE

REGISTERED PROFESSIONAL ENGINEER MILIND R. DESAI No. C51437 Exp. 6/30/10 CIVIL STATE OF CALIFORNIA

The State of California or its officers or agents shall not be responsible for the accuracy or completeness of electronic copies of this plan sheet.

OCTA
550 S. MAIN STREET
ORANGE, CA 92863

CH2M HILL
6 HUTTON CENTRE DRIVE, SUITE 700
SANTA ANA, CA 92707

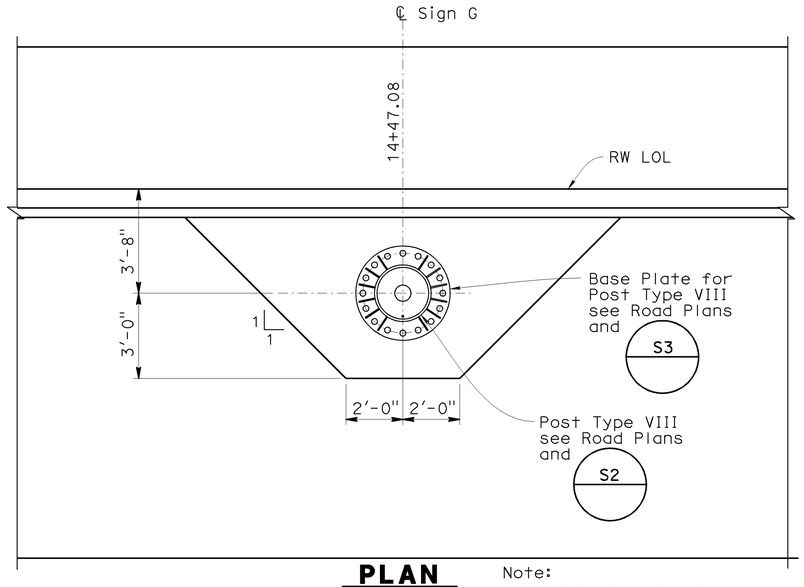

PLAN
3/8" = 1'-0"

Note:
Spread footing Reinf not shown for clarity.

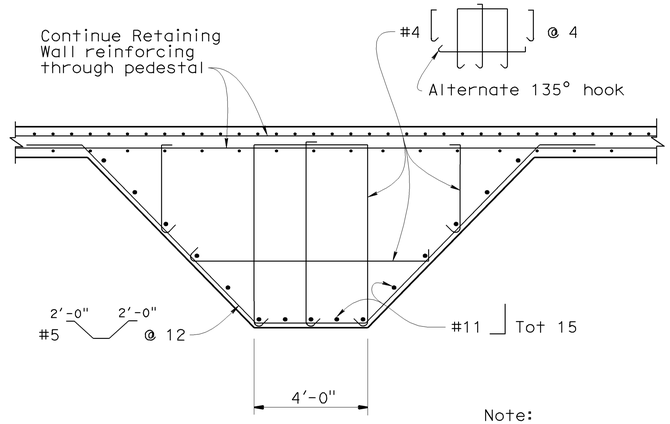

Note:
Soundwall vertical reinforcement not shown.

SECTION B-B
3/8" = 1'-0"

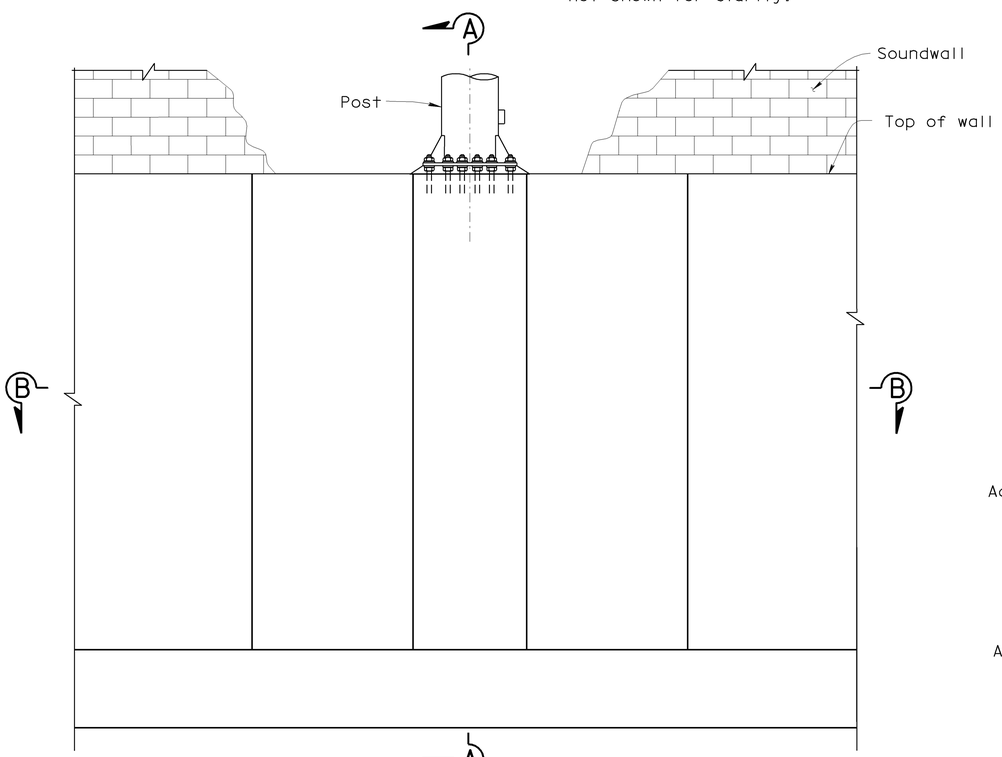

ELEVATION
3/8" = 1'-0"

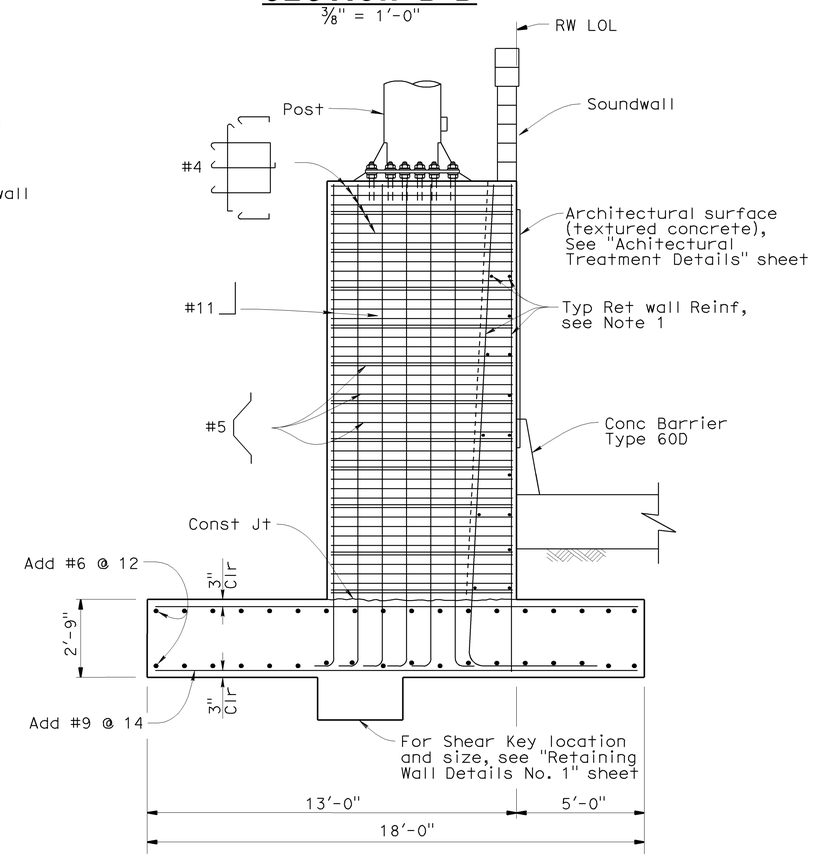

SECTION A-A
3/8" = 1'-0"

NOTES:

1. For information not shown, see "Retaining Wall Details No. 1" sheet.
2. Reinforcement shown on Sections A-A & B-B shall only apply at overhead sign foundation. All other reinforcement, see "Retaining Wall Details No. 1" sheet.

Jon Hamaguchi
DESIGN OVERSIGHT Jon Hamaguchi
11-24-09
SIGN OFF DATE

	BY	CHECKED
DESIGN	M. Desai / J. Powell	M. Atiqullah / A. Issa
DETAILS	J. Powell	M. Atiqullah / A. Issa
QUANTITIES	Y. Chiu	L. Ros

PREPARED FOR THE STATE OF CALIFORNIA DEPARTMENT OF TRANSPORTATION

Ayman Salama
PROJECT ENGINEER

BRIDGE NO. 55E0090
POST MILE 19.24

RETAINING WALL NO. 622
OVERHEAD SIGN PEDESTAL DETAILS

DESIGN DETAIL SHEET (ENGLISH) (REV. 2/25/05)

ORIGINAL SCALE IN INCHES FOR REDUCED PLANS 0 1 2 3

CU 12220
EA 0F0321

DISREGARD PRINTS BEARING EARLIER REVISION DATES

REVISION DATES (PRELIMINARY STAGE ONLY) 02/18/09 04/07/09 04/17/09 06/08/09

SHEET 7 OF 17

FILE => 55e0090-f-d03.dgn

USERNAME => trhenard DATE PLOTTED => 25-JAN-2010 TIME PLOTTED => 08:37

DIST	COUNTY	ROUTE	POST MILES TOTAL PROJECT	SHEET No	TOTAL SHEETS
12	Ora	57	18.4/20.9	712	856

Milind Desai 06/08/09
REGISTERED ENGINEER - CIVIL DATE

1-25-10
PLANS APPROVAL DATE

REGISTERED PROFESSIONAL ENGINEER MILIND R. DESAI No. C51437 Exp. 6/30/10 CIVIL STATE OF CALIFORNIA

The State of California or its officers or agents shall not be responsible for the accuracy or completeness of electronic copies of this plan sheet.

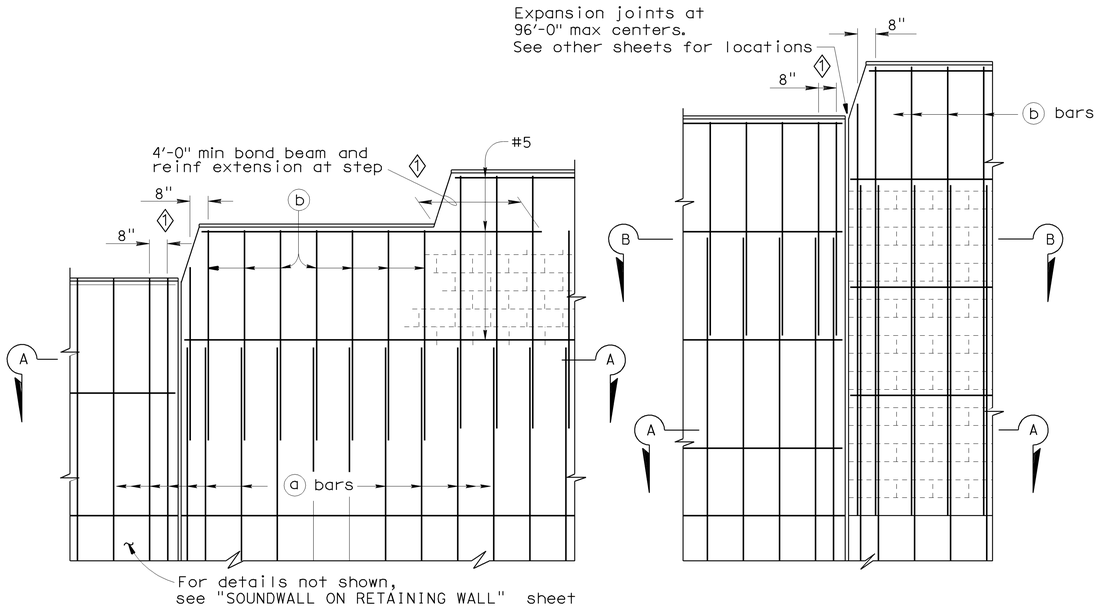

PART ELEVATIONS

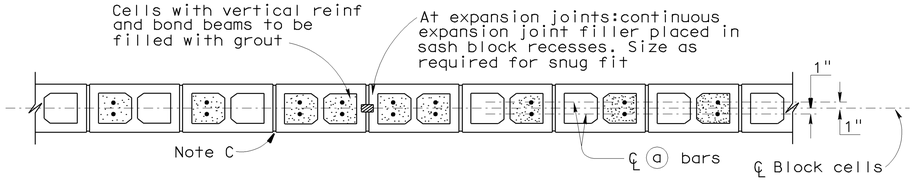

SECTION A-A

For details not shown,see other details

H=6'-0" THRU H=12'-0"

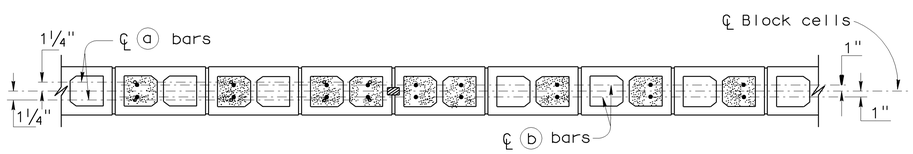

SECTION A-A SECTION B-B

For details not shown,see other details

H=12'-0" THRU H=16'-0"

DESIGN NOTES

DESIGN

Uniform Building Code,1997 Edition and the Bridge Design Specifications.

DESIGN WIND LOAD

33 psf

DESIGN SEISMIC LOAD

0.57 Dead load

REINFORCED CONCRETE

f'c = 3.250 ksi
fy = 60 ksi

CONCRETE MASONRY

REGULAR STRENGTH	HIGH STRENGTH	
f'm = 1500 psi	f'm = 2000 psi	f'm = 2500 psi
f_b = 495 psi	f_b = 660 psi	f_b = 830 psi
fs = 24000 psi	fs = 24000 psi	fs = 24000 psi
n = 25.8	n = 19.3	n = 15.5

LOAD FACTORS AND LOAD COMBINATIONS

Working Stress Design (WSD) Percentage of unit stress

Group 1: D + E + SC 100%
Group 2: D + W + SC + E 100%
Group 3: D + 0.71 EQD + E 100%

Where:

D = Dead load
E = Lateral earth pressure
SC = Live load surcharge
W = Wind load
EQD = Seismic dead load

Load Factor Design (LFD)

Group A: βD +1.7 E + 1.7 SC
Group B: βD +1.7 E + 1.3 W
Group C: βD +1.3 E + 1.0 EQE
Group D: βD +1.3 E + 1.0 EQD
Group E: βD +1.1 E + 0.85 (EQE + EQD)

Where : β = 0.9 or 1.2, whichever controls in design
D = Dead load
E = Lateral earth pressure
SC = Live load surcharge
W = Wind load
EQD = Seismic dead load
EQE = Seismic earth load

STRENGTH REDUCTION FACTORS, Ø

Reinforced concrete:
For flexure ——— Ø=0.90
For shear ——— Ø=0.85

Concrete masonry:
For flexure ——— Ø=0.80
For shear ——— Ø=0.60

Foundations:
See "RETAINING WALL WITH SOUNDWALL" sheets

SOUNDWALL REINFORCEMENT TABLE

Maximum H	a bars @ 406 max	b bars @ 406 max	"y"	f'm (psi)	Compressive Strength of CMU (psi)	Maximum H
6'-0"	#4	———	———	1500	1.9	6'-0"
8'-0"	#4	———	———	1500	1900	8'-0"
10'-0"	#4	———	———	1500	1900	10'-0"
12'-0"	#5	#4	6'-0"	2000	2800	12'-0"
14'-0"	#6	#4	8'-0"	2500	3750	14'-0"
16'-0"	#6	#4	10'-0"	2500	3750	16'-0"

GENERAL NOTES

Note A: For type of block and joint finish, See other sheets.

Note B: When blocks are laid in stacked bond, ladder type, galvanized joint reinforcement shall be provided. A minimum of 2 - 9 gauge wires continuous at 4'-0" maximum to be used. Locate reinforcement in joints that are at the approximate midpoint between bond beams.

Note C: Horizontal joints shall be tooled concave or may be weathered.
Vertical joints shall be tooled concave or may be raked.

Note D: For intermediate wall heights that are between the "H's" given. Use the tabular information for the next higher "H".

Note E: Masonry strengths are listed in the "SOUNDWALL REINFORCEMENT TABLE".

SPECIAL DETAILS

RETAINING WALL NO. 622

SOUNDWALL ON RETAINING WALL-MASONRY BLOCK

DETAILS NO. 1

STANDARD DRAWING

FILE NO. xs15-120-1e

APPROVED BY T SATTER
RESPONSIBLE TECHNICAL SPECIALIST
APPROVAL DATE 4-15-08

RELEASED BY ROBERTO LACALLE
RESPONSIBLE OFFICE CHIEF
RELEASE DATE REVISED

1 Revised Step

STATE OF CALIFORNIA
DEPARTMENT OF TRANSPORTATION

DIVISION OF ENGINEERING SERVICES

BRIDGE NO. 55E0090
POST MILE 19.24

CU 12220
EA 0F0321

DISREGARD PRINTS BEARING EARLIER REVISION DATES
REVISION DATES (PRELIMINARY STAGE ONLY) 02/18/09 04/07/09 04/17/09 06/08/09

SHEET 8 OF 17

DS OSD 2147A (ENGLISH STANDARD DRAWING "XS" BORDER REV. 01/11/08)

ORIGINAL SCALE IN INCHES FOR REDUCED PLANS 0 1 2 3

USERNAME => trlenard

55e0090-g-rwdt01.dgn

DATE PLOTTED => 25-JAN-2010 TIME PLOTTED => 08:38

DIST	COUNTY	ROUTE	POST MILES TOTAL PROJECT	SHEET No	TOTAL SHEETS
12	Ora	57	18.4/20.9	713	856

Milind Desai 06/08/09
REGISTERED ENGINEER - CIVIL DATE

1-25-10
PLANS APPROVAL DATE

REGISTERED PROFESSIONAL ENGINEER MILIND R. DESAI No. C51437 Exp. 6/30/10 CIVIL STATE OF CALIFORNIA

The State of California or its officers or agents shall not be responsible for the accuracy or completeness of electronic copies of this plan sheet.

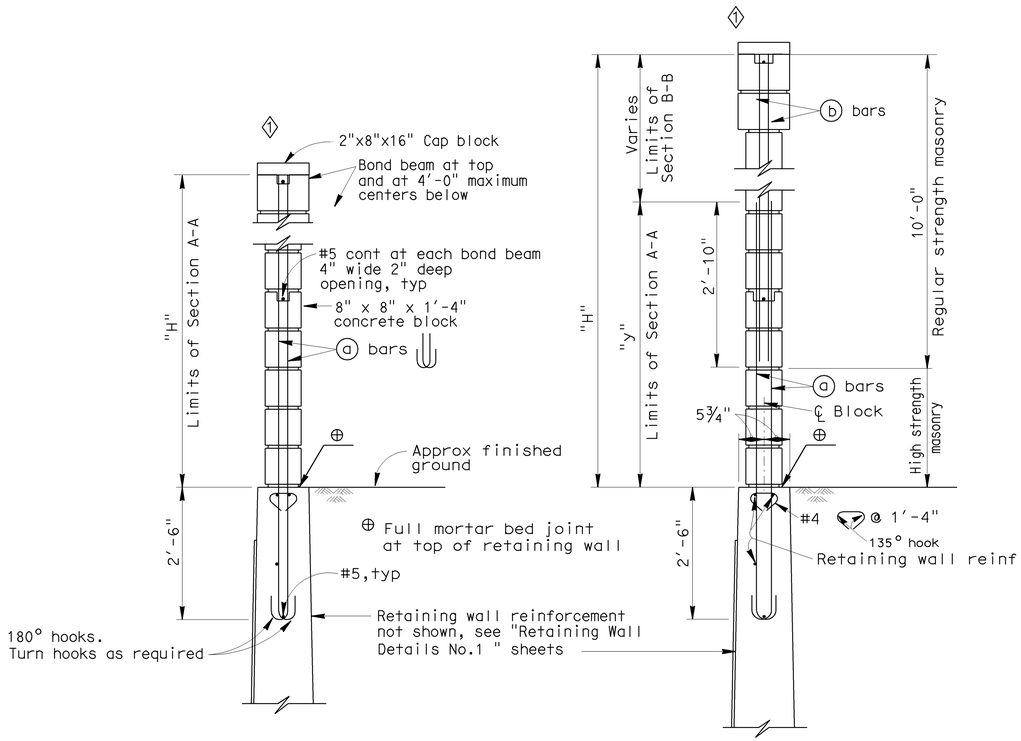

H=6'-0" THRU H=10'-0"

For details not shown, see H=12'-0" thru H=16'-0"

H=12'-0" THRU H=16'-0"

For details not shown, see H=6'-0" thru H=10'-0"

TYPICAL SECTIONS

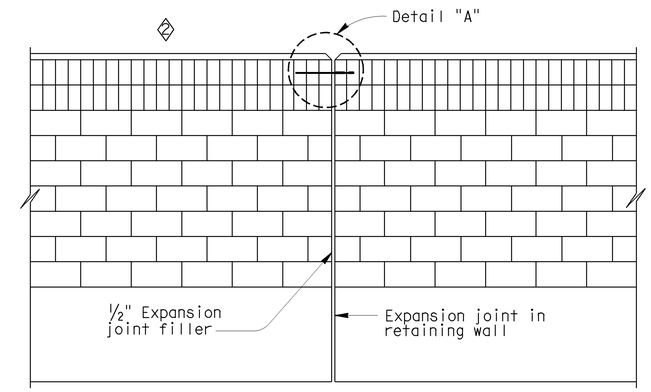

ALIGNMENT KEY DETAIL

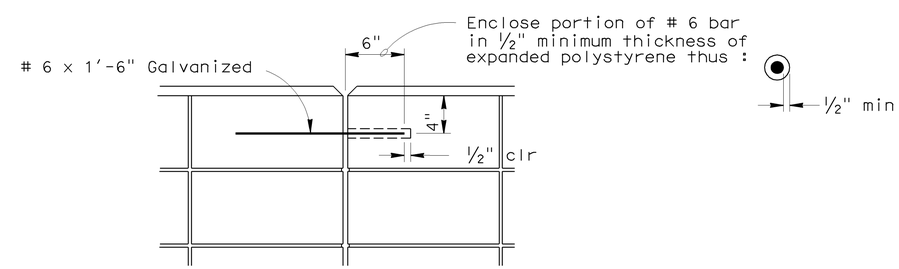

DETAIL A 3

SPECIAL DETAILS

RETAINING WALL NO. 622

SOUNDWALL ON RETAINING WALL-MASONRY BLOCK

DETAILS NO. 2

STANDARD DRAWING

FILE NO. xs15-120-2e

APPROVED BY T SATTER
RESPONSIBLE TECHNICAL SPECIALIST
APPROVAL DATE 4-15-08

RELEASED BY ROBERTO LACALLE
RESPONSIBLE OFFICE CHIEF
RELEASE DATE REVISED

1 Revised cap blocks
2 Revised Alignment Key Detail
3 Revised Detail A

STATE OF CALIFORNIA
DEPARTMENT OF TRANSPORTATION

DIVISION OF ENGINEERING SERVICES

BRIDGE NO. 55E0090
POST MILE 19.24

DS OSD 2147A (ENGLISH STANDARD DRAWING "XS" BORDER REV. 01/11/08)

ORIGINAL SCALE IN INCHES FOR REDUCED PLANS 0 1 2 3

CU 12220
EA 0F0321

DISREGARD PRINTS BEARING EARLIER REVISION DATES

REVISION DATES (PRELIMINARY STAGE ONLY) 02/18/09 04/02/09 04/17/09 06/08/09

SHEET 9 OF 17

USERNAME => trlenard

55e0090-g-rwdt02.dgn

DATE PLOTTED => 25-JAN-2010 TIME PLOTTED => 08:38

DIST	COUNTY	ROUTE	POST MILES TOTAL PROJECT	SHEET No	TOTAL SHEETS
12	Ora	57	18.4/20.9	714	856

Milind Desai 06/08/09
REGISTERED ENGINEER - CIVIL DATE

1-25-10
PLANS APPROVAL DATE

REGISTERED PROFESSIONAL ENGINEER MILIND R. DESAI No. C51437 Exp. 6/30/10 CIVIL STATE OF CALIFORNIA

The State of California or its officers or agents shall not be responsible for the accuracy or completeness of electronic copies of this plan sheet.

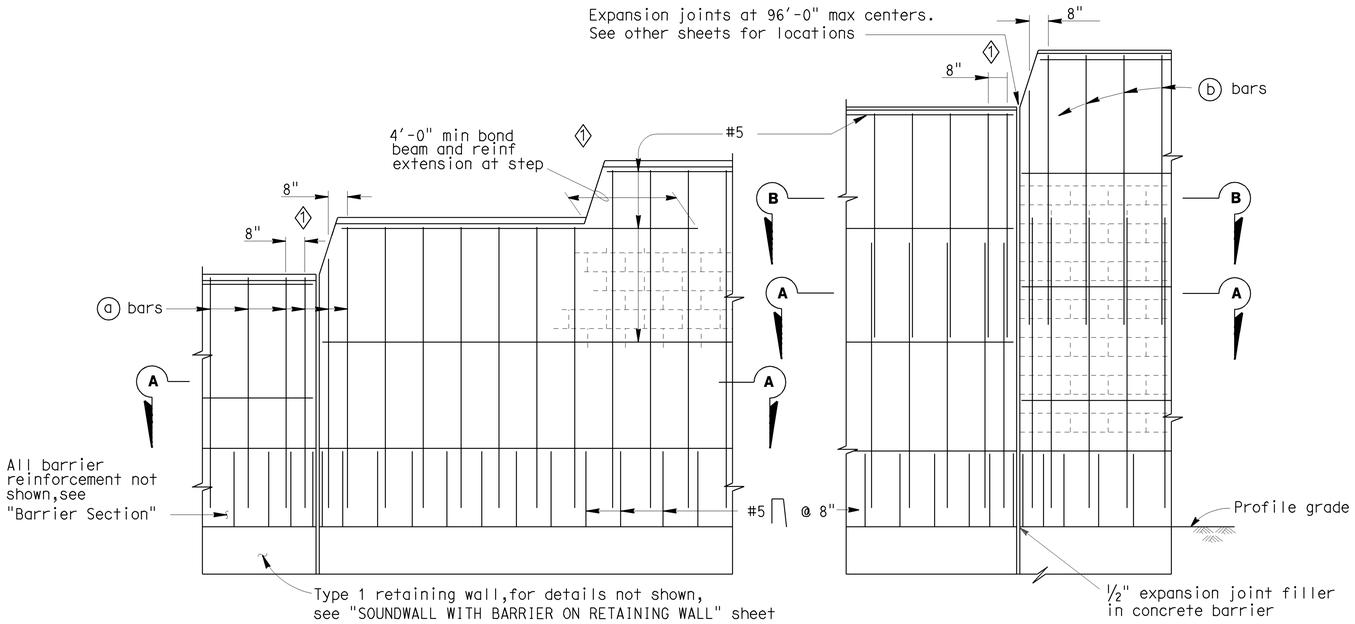

PART ELEVATIONS

SOUNDWALL REINFORCEMENT TABLE

Maximum H	a bars @ 1'-4" max	b bars @ 1'-4" max	"y"	f'm (KSI)	Compressive Strength of CMU (KSI)	Maximum H
6'-4"	# 4	———	———	1.5	1.9	6'-4"
8'-4"	# 4	———	———	1.5	1.9	8'-4"
10'-4"	# 4	———	———	1.5	1.9	10'-4"
12'-4"	# 5	# 4	5'-0"	1.5	1.9	12'-4"
14'-4"	# 6	# 4	7'-0"	1.5	1.9	14'-4"
16'-4"	# 6	# 4	9'-0"	2.5	3.7	16'-4"

Note I : For details not shown, see "SOUNDWALL WITH BARRIER ON RETAINING WALL - MASONRY BLOCK -- DETAILS NO.2" sheet.

Note II : Slope ground at traffic side of barrier to drain. Maximum slope ±10%.

Note III: See "SOUNDWALL MASONRY BLOCK - MISCELLANEOUS DETAILS" sheet for other details.

GENERAL NOTES

Note A: For type of block and joint finish, see other sheets.

Note B: When blocks are laid in stacked bond, ladder type, galvanized joint reinforcement shall be provided. A minimum of 0.07"-0.14" wire continuous at 4'-0" maximum to be used. Locate reinforcement in joints that are at the approximate midpoint between bond beams.

Note C: Horizontal joints shall be tooled concave or may be weathered.
Vertical joints shall be tooled concave or may be raked.

Note D: For intermediate wall heights that are between the "H's" given. Use the tabular information for the next higher "H".

Note E: Masonry strengths are listed in "SOUNDWALL REINFORCEMENT TABLE".

Note F: Class 2 concrete to be used for the barrier.

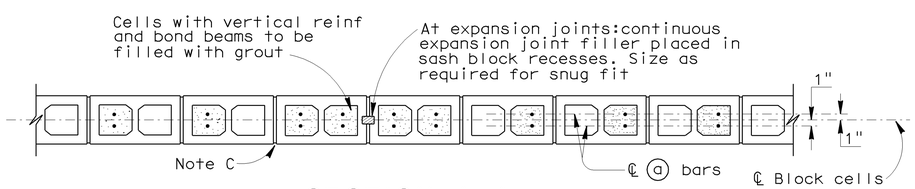

SECTION A-A

For details not shown, see other details

H=6'-4" THRU H=10'-4"

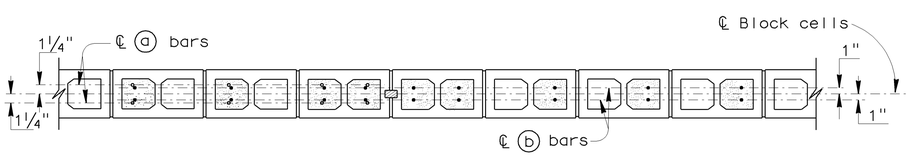

SECTION A-A

SECTION B-B

For details not shown, see other details

H=12'-4" THRU H=16'-4"

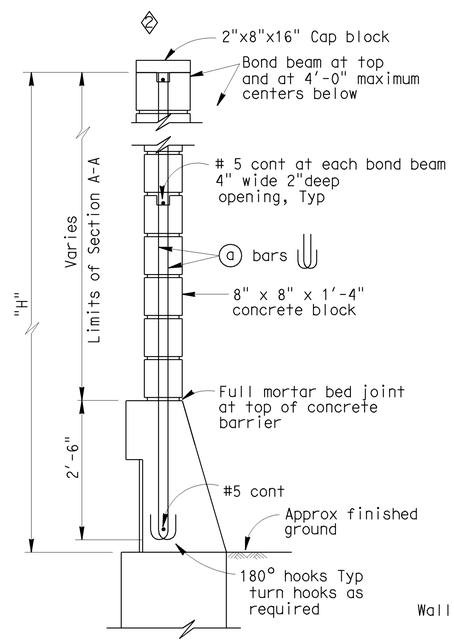

H=6'-4" THRU H=10'-4"

For details not shown, see H=12'-4" thru H=16'-4"

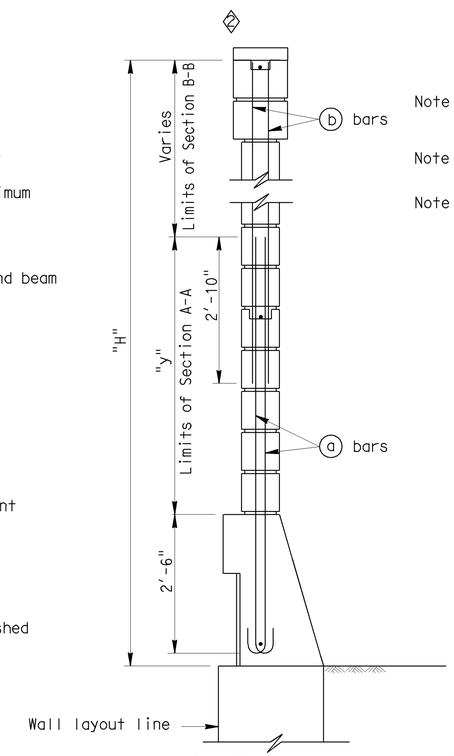

H=12'-4" THRU H=16'-4"

For details not shown, see H=6'-4" thru H=10'-4"

TYPICAL SECTIONS

SPECIAL DETAILS

RETAINING WALL NO. 622

SOUNDWALL - MASONRY BLOCK WITH BARRIER ON RETAINING WALL

DETAILS NO. 1

STANDARD DRAWING

FILE NO. xs15-130-1e

APPROVED BY T SATTER — RESPONSIBLE TECHNICAL SPECIALIST
APPROVAL DATE 9-2-08

RELEASED BY ROBERTO LACALLE — RESPONSIBLE OFFICE CHIEF
RELEASE DATE REVISED

1 Revised Step
2 Revised cap blocks

STATE OF CALIFORNIA
DEPARTMENT OF TRANSPORTATION

DIVISION OF ENGINEERING SERVICES

BRIDGE NO. 55E0090
POST MILE 19.24

CU 12220
EA 0F0321

DISREGARD PRINTS BEARING EARLIER REVISION DATES

REVISION DATES (PRELIMINARY STAGE ONLY): 02/18/09 04/07/09 04/17/09 06/08/09

SHEET 10 OF 17

DS OSD 2147A (ENGLISH STANDARD DRAWING "XS" BORDER REV. 01/11/08)

ORIGINAL SCALE IN INCHES FOR REDUCED PLANS 0 1 2 3

USERNAME => trlenard

55e0090-g-swdt01.dgn

DATE PLOTTED => 25-JAN-2010 TIME PLOTTED => 08:38

DIST	COUNTY	ROUTE	POST MILES TOTAL PROJECT	SHEET No	TOTAL SHEETS
12	Ora	57	18.4/20.9	715	856

Milind Desai 06/08/09
REGISTERED ENGINEER - CIVIL DATE

1-25-10
PLANS APPROVAL DATE

REGISTERED PROFESSIONAL ENGINEER MILIND R. DESAI No. C51437 Exp. 6/30/10 CIVIL STATE OF CALIFORNIA

The State of California or its officers or agents shall not be responsible for the accuracy or completeness of electronic copies of this plan sheet.

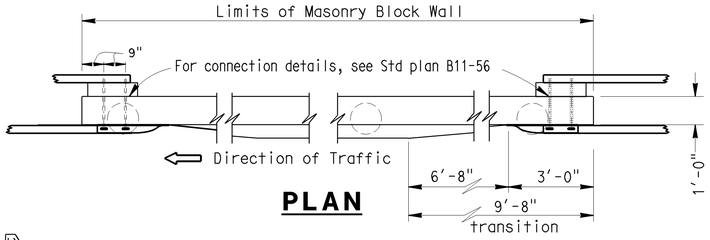

PLAN

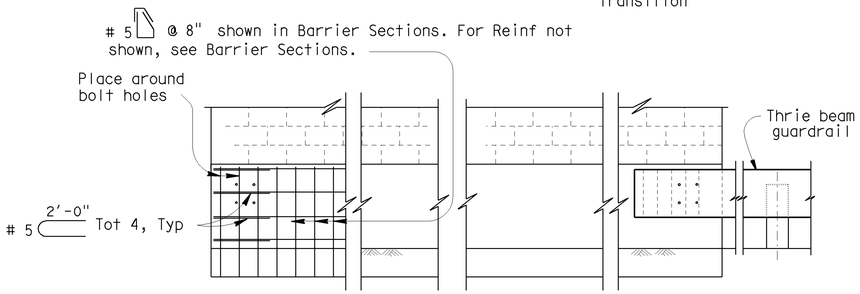

ELEVATION

METAL BEAM GUARDRAIL ANCHORAGE

For details not shown, see Std plan B11-56.

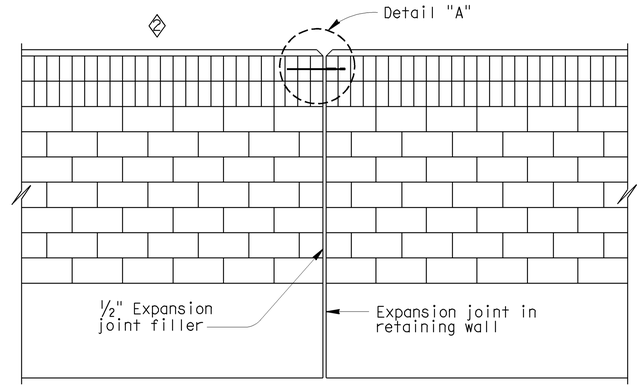

ALIGNMENT KEY DETAIL

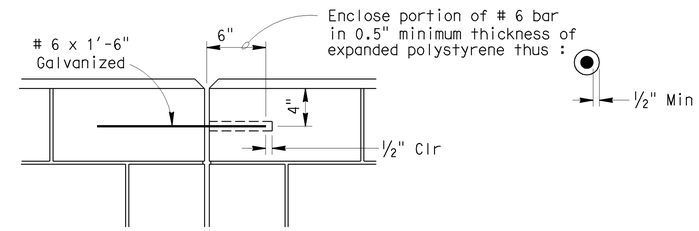

DETAIL A

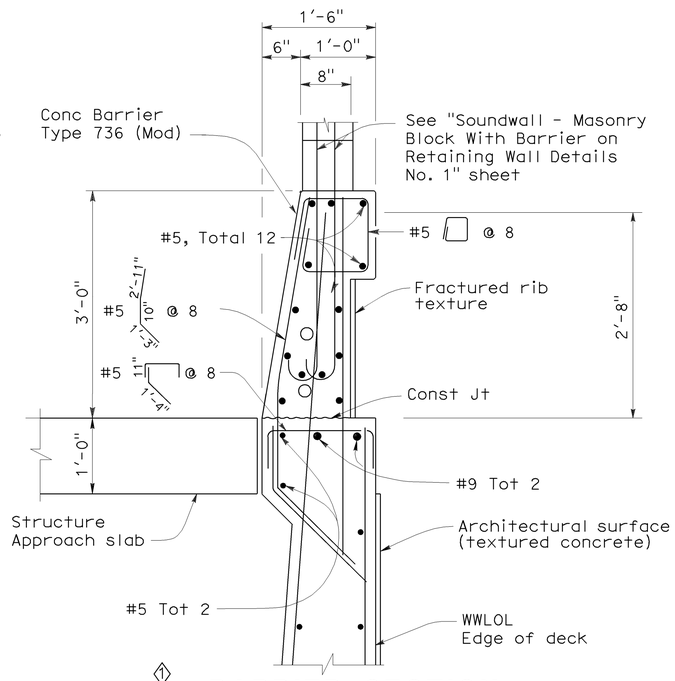

BARRIER SECTION

NOTES:

I : For details not shown,see "Retaining Wall Details No. 1 & No. 2" sheet.

II : Slope ground at traffic side of barrier to drain. Maximum slope ±10%. See Standard Plan B11-56, Note D.

DESIGN NOTES

DESIGN

Uniform Building Code,1997 Edition and the Bridge Design Specifications.

DESIGN WIND LOAD

33 PSF

DESIGN SEISMIC LOAD

0.57 Dead load

REINFORCED CONCRETE

f'c = 3250 PSI
fy = 60 KSI

CONCRETE MASONRY

REGULAR STRENGTH	HIGH STRENGTH	
f'm = 1500 PSI	f'm = 2000 PSI	f'm = 2500 PSI
f_b = 1500 PSI	f_b = 660 PSI	f_b = 830 PSI
fs = 24.0 KSI	fs = 24.0 KSI	fs = 24000 PSI
n = 25.8	n = 19.3	n = 15.5

LOAD FACTORS AND LOAD COMBINATIONS

Working Stress Design (WSD) Percentage of unit stress

Group 1: D + E + SC	100%
Group 2: D + W + SC + E	100%
Group 3: D + 0.71 EQD + E	100%

Where:

D = Dead load
E = Lateral earth pressure
SC = Live load surcharge
W = Wind load
EQD = Seismic dead load

Load Factor Design (LFD)

Group A: βD +1.7 E + 1.7 SC
Group B: βD +1.7 E + 1.3 W
Group C: βD +1.3 E + 1.0 EQE
Group D: βD +1.3 E + 1.0 EQD
Group E: βD +1.1 E + 0.85 (EQE + EQD)

Where : β = 0.9 or 1.2, whichever controls in design
D = Dead load
E = Lateral earth pressure
SC = Live load surcharge
W = Wind load
EQD = Seismic dead load
EQE = Seismic earth load

STRENGTH REDUCTION FACTORS, Ø

Reinforced concrete:
For flexure ---------- Ø=0.90
For shear ---------- Ø=0.85

Concrete masonry:
For flexure ---------- Ø=0.80
For shear ---------- Ø=0.60

Foundations :

See "RETAINING WALL WITH SOUNDWALL" sheets.

SPECIAL DETAILS

RETAINING WALL NO. 622

SOUNDWALL - MASONRY BLOCK WITH BARRIER ON RETAINING WALL

DETAILS NO. 2

STANDARD DRAWING

FILE NO. xs15-130-2e

APPROVED BY T SATTER
RESPONSIBLE TECHNICAL SPECIALIST
APPROVAL DATE 4-15-08

RELEASED BY ROBERTO LACALLE
RESPONSIBLE OFFICE CHIEF
RELEASE DATE REVISED

1 Revised Barrier Section
2 Revised Alignment Key Detail
3 Delete Clearance Detail
4 Revised Note

STATE OF CALIFORNIA
DEPARTMENT OF TRANSPORTATION

DIVISION OF ENGINEERING SERVICES

BRIDGE NO. 55E0090
POST MILE 19.24

CU 12220
EA 0F0321

DISREGARD PRINTS BEARING EARLIER REVISION DATES
REVISION DATES (PRELIMINARY STAGE ONLY) 02/18/09 04/07/09 04/17/09 06/08/09

SHEET 11 OF 17

DS OSD 2147A (ENGLISH STANDARD DRAWING "XS" BORDER REV. 01/11/08)

ORIGINAL SCALE IN INCHES FOR REDUCED PLANS 0 1 2 3

USERNAME => trlenard

55e0090-g-swdt02.dgn

DATE PLOTTED => 25-JAN-2010 TIME PLOTTED => 08:33

DIST	COUNTY	ROUTE	POST MILES TOTAL PROJECT	SHEET No	TOTAL SHEETS
12	Ora	57	18.4/20.9	716	856

Milind Desai 06/08/09
REGISTERED CIVIL ENGINEER DATE

1-25-10
PLANS APPROVAL DATE

The State of California or its officers or agents shall not be responsible for the accuracy or completeness of electronic copies of this plan sheet.

REGISTERED PROFESSIONAL ENGINEER
MILIND R. DESAI
No. C51437
Exp. 6/30/10
CIVIL
STATE OF CALIFORNIA

OCTA
550 S. MAIN STREET
ORANGE, CA 92863

CH2M HILL
6 HUTTON CENTRE DRIVE, SUITE 700
SANTA ANA, CA 92707

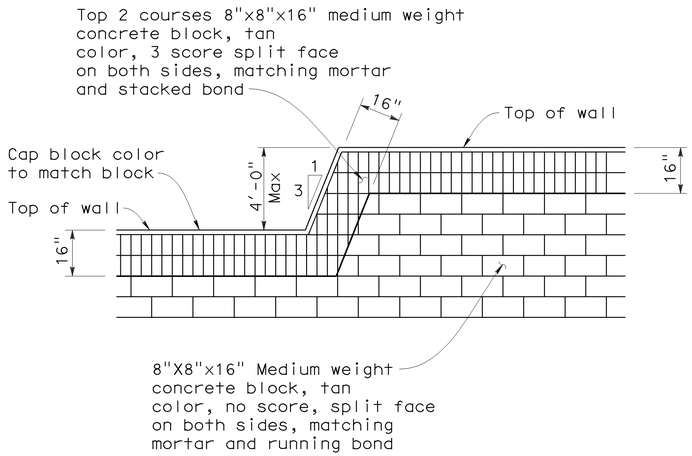

TRANSITION ELEVATION

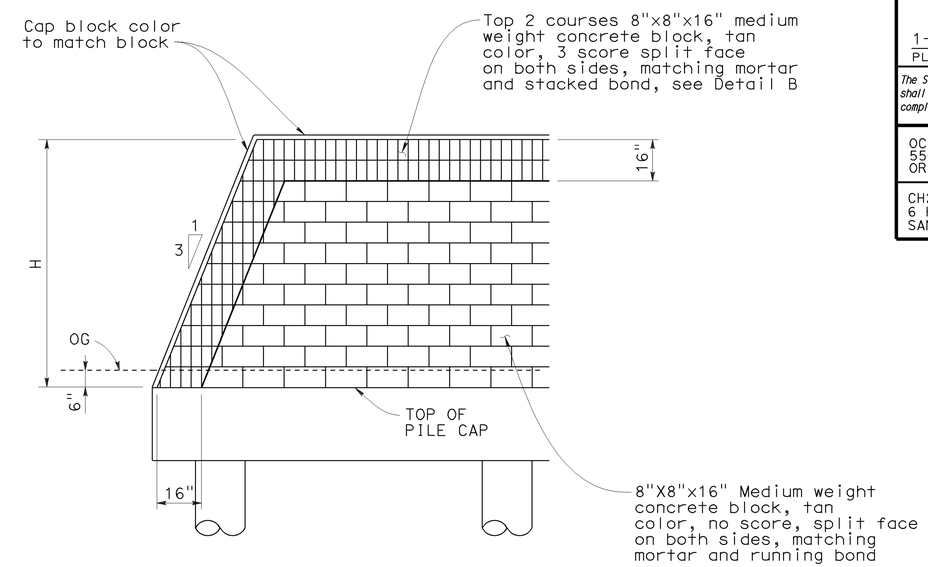

END WALL ELEVATION

CONCRETE BLOCK TYPE, COLOR AND PLACEMENT

No Scale

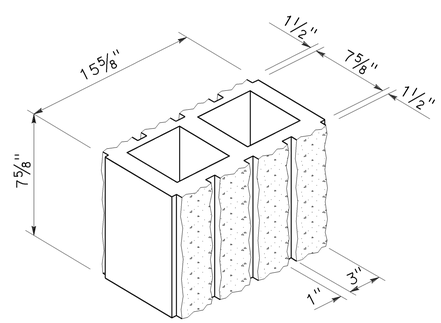

DETAIL B

No Scale

8" Wide 3-Score split face both sides

Jon Hamaguchi
DESIGN OVERSIGHT Jon Hamaguchi
11-24-09
SIGN OFF DATE

	BY	CHECKED
DESIGN	M. Desai / J. Powell	M. Atiqullah / A. Issa
DETAILS	J. Powell	M. Atiqullah / A. Issa
QUANTITIES	Y. Chiu	L. Ros

PREPARED FOR THE
STATE OF CALIFORNIA
DEPARTMENT OF TRANSPORTATION

Ayman Salama
PROJECT ENGINEER

BRIDGE NO. 55E0090
POST MILE 19.24

RETAINING WALL NO. 622

SOUNDWALL MASONRY BLOCK MISCELLANEOUS DETAILS

DESIGN DETAIL SHEET (ENGLISH) (REV. 2/25/05)

ORIGINAL SCALE IN INCHES FOR REDUCED PLANS 0 1 2 3

CU 12220
EA 0F0321

DISREGARD PRINTS BEARING EARLIER REVISION DATES

REVISION DATES (PRELIMINARY STAGE ONLY) 02/18/09 04/07/09 04/17/09 06/08/09

SHEET 12 OF 17

FILE => 55e0090-u-miscdt01.dgn

USERNAME => friehard DATE PLOTTED => 25-JAN-2010 TIME PLOTTED => 08:38

DIST	COUNTY	ROUTE	POST MILES TOTAL PROJECT	SHEET No	TOTAL SHEETS
12	Ora	57	18.4/20.9	717	856

REGISTERED CIVIL ENGINEER — DATE 06/08/09

1-25-10
PLANS APPROVAL DATE

REGISTERED PROFESSIONAL ENGINEER — MOHAMMED ATIQULLAH — No. C47027 — Exp. 12/31/09 — CIVIL — STATE OF CALIFORNIA

The State of California or its officers or agents shall not be responsible for the accuracy or completeness of electronic copies of this plan sheet.

OCTA
550 S. MAIN STREET
ORANGE, CA 92863

CH2M HILL
6 HUTTON CENTRE DRIVE, SUITE 700
SANTA ANA, CA 92707

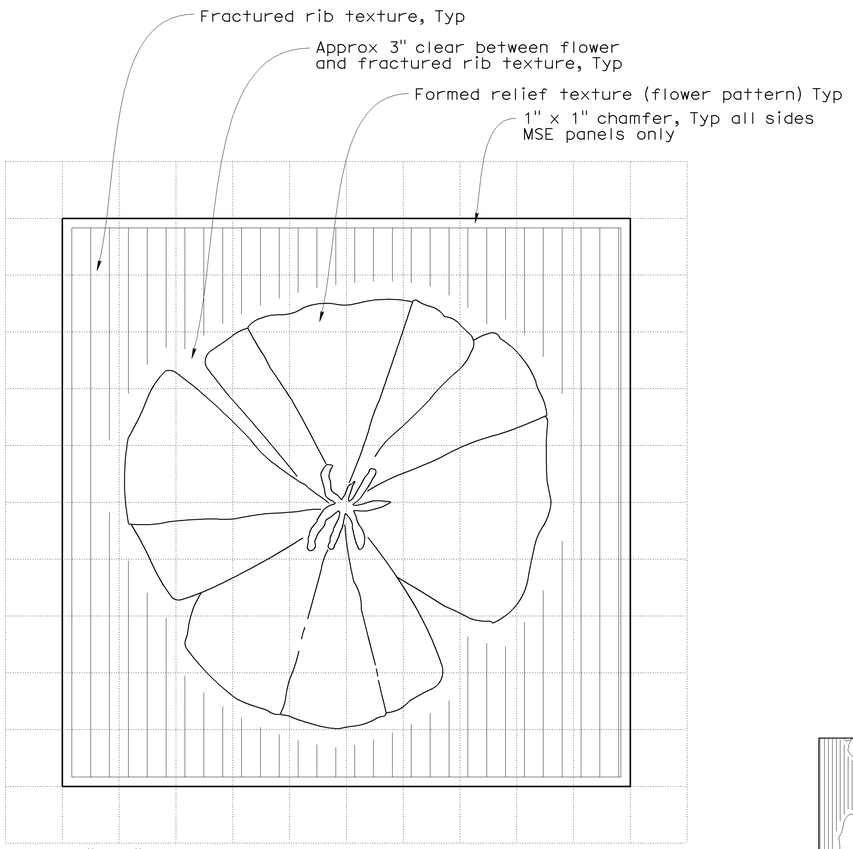

ARCHITECTURAL SURFACE (TEXTURED CONCRETE) FOR MSE PANEL

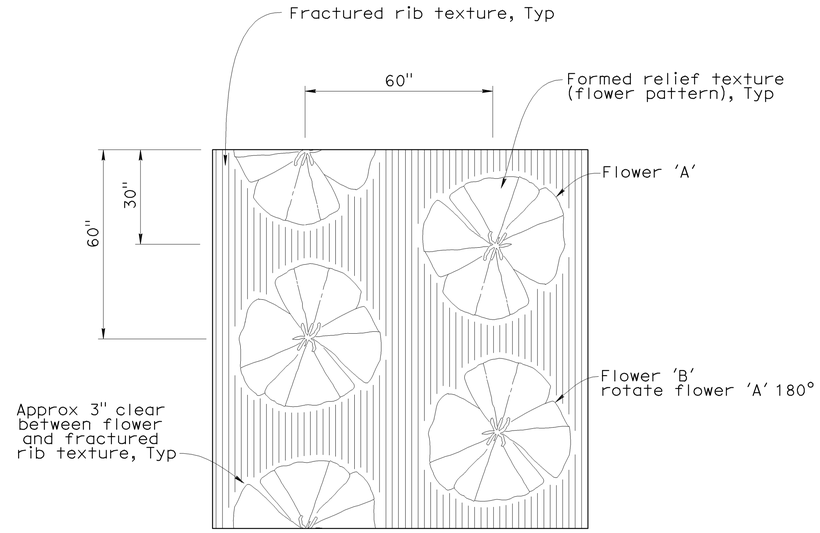

ARCHITECTURAL SURFACE (TEXTURED CONCRETE) PATTERN

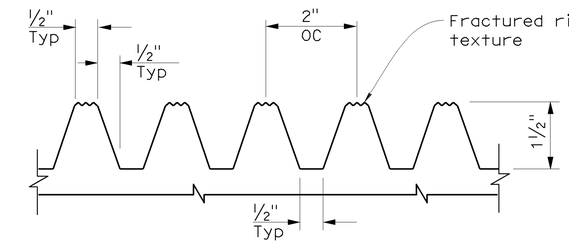

FRACTURED RIB TEXTURE DETAIL

(Elastomer Formliner)

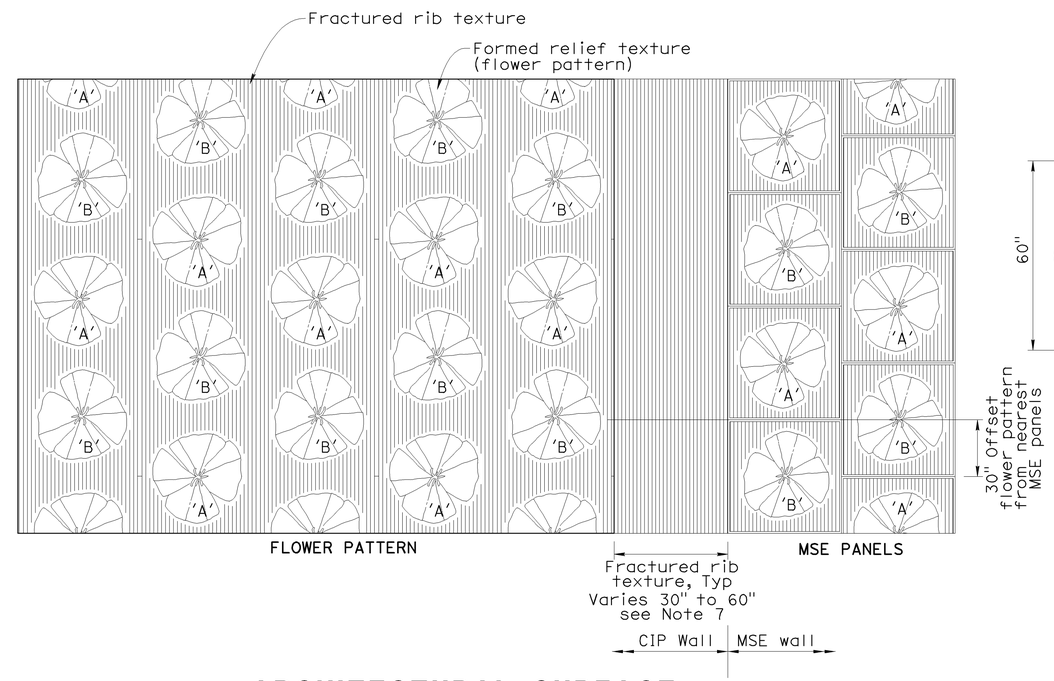

ARCHITECTURAL SURFACE (TEXTURED CONCRETE) ELEVATION

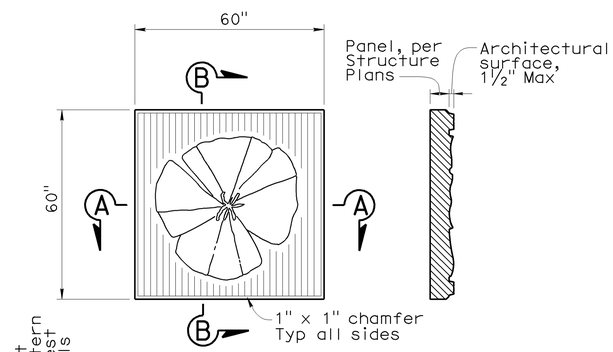

VIEW

SECTION B-B

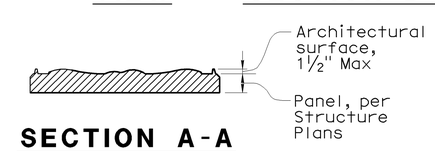

SECTION A-A

MSE PANEL

No scale

NOTES:

1. Identical flower images, scale and spacing shall be used for flower pattern and MSE wall panels.
2. Within a vertical column, flower images shall alternate between flowers 'A' and 'B'. Vertical columns shall be offset 30" from adjacent columns.
3. Where placed on walls bounded by concrete barriers, finished grade or top of wall, flower pattern shall be continued without concern for partial flower images, except as noted.
4. Refer to structural details for width of smooth band to be applied at edges of structures.
5. Where the flower pattern will be used adjacent to a horizontal limit such as a bridge abutment, adjoining MSE wall or overhead sign structure support, flower pattern shall be discontinued from a section not less than 30" and not greater than 60" wide from the horizontal limit to avoid truncation of flower images. Fractured rib texture shall be inserted in the resulting gap to create a continuous buffer between pattern areas.
6. The nearest column of flower images (flower pattern) shall be offset vertically 30" from the panels.
7. Vary fractured rib texture width (30" to 60") to provide complete flower pattern on cip wall side.

DESIGN OVERSIGHT — Jon Hamaguchi
11-24-09
SIGN OFF DATE

	BY	CHECKED
DESIGN	M. Atiqullah	E. Cutler
DETAILS	M. Atiqullah	E. Cutler
QUANTITIES	Y. Chiu	L. Ros

PREPARED FOR THE STATE OF CALIFORNIA DEPARTMENT OF TRANSPORTATION

Ayman Salama
PROJECT ENGINEER

BRIDGE NO. 55E0090
POST MILE 19.24

RETAINING WALL NO. 622
ARCHITECTURAL TREATMENT DETAILS

DESIGN DETAIL SHEET (ENGLISH) (REV. 2/25/05)

ORIGINAL SCALE IN INCHES FOR REDUCED PLANS 0 1 2 3

CU 12220
EA 0F0321

DISREGARD PRINTS BEARING EARLIER REVISION DATES — REVISION DATES (PRELIMINARY STAGE ONLY) 06/08/09

SHEET 13 OF 17

FILE => 55e0090-u-tarcdt01.dgn

USERNAME => friehard DATE PLOTTED => 25-JAN-2010 TIME PLOTTED => 08:38

DIST	COUNTY	ROUTE	POST MILES TOTAL PROJECT	SHEET No	TOTAL SHEETS
12	Ora	57	18.4/20.9	718	856

Hisham Nofal 06/08/09
GEOTECHNICAL PROFESSIONAL DATE

REGISTERED PROFESSIONAL ENGINEER HISHAM M. NOFAL No. 2765 Exp. 09/30/09 GEOTECHNICAL STATE OF CALIFORNIA

1-25-10
PLANS APPROVAL DATE

The State of California or its officers or agents shall not be responsible for the accuracy or completeness of electronic copies of this plan sheet.

OCTA
550 S. MAIN STREET
ORANGE, CA 92863

CH2M HILL
6 HUTTON CENTRE DRIVE, SUITE 700
SANTA ANA, CA 92707

BENCHMARK:

Horizontal coordinates are CCS NAD-83, Zone 6.
vertical control based on North American Vertical Datum 1988.
Pt 1065: N2276096.906, E6066849.261, Elev 345.199

SAMPLER TYPES:

California modified ring sampler
standard penetration test sampler

HAMMER TYPE:

Automatic hammer

CORRECTION FACTOR:

To convert from California modified ring sampler blow count to equivalent standard penetration test sampler blow count, for granular and cohesive soil, multiply by 0.67.

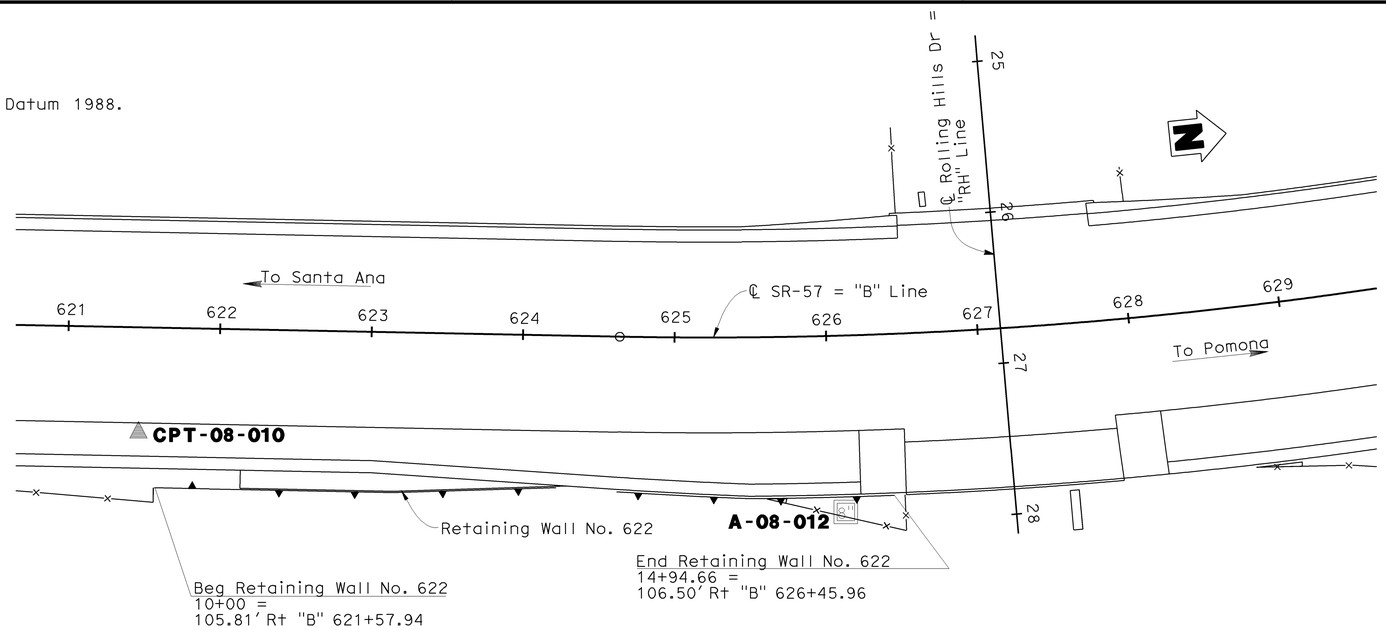

PLAN
1"=50'

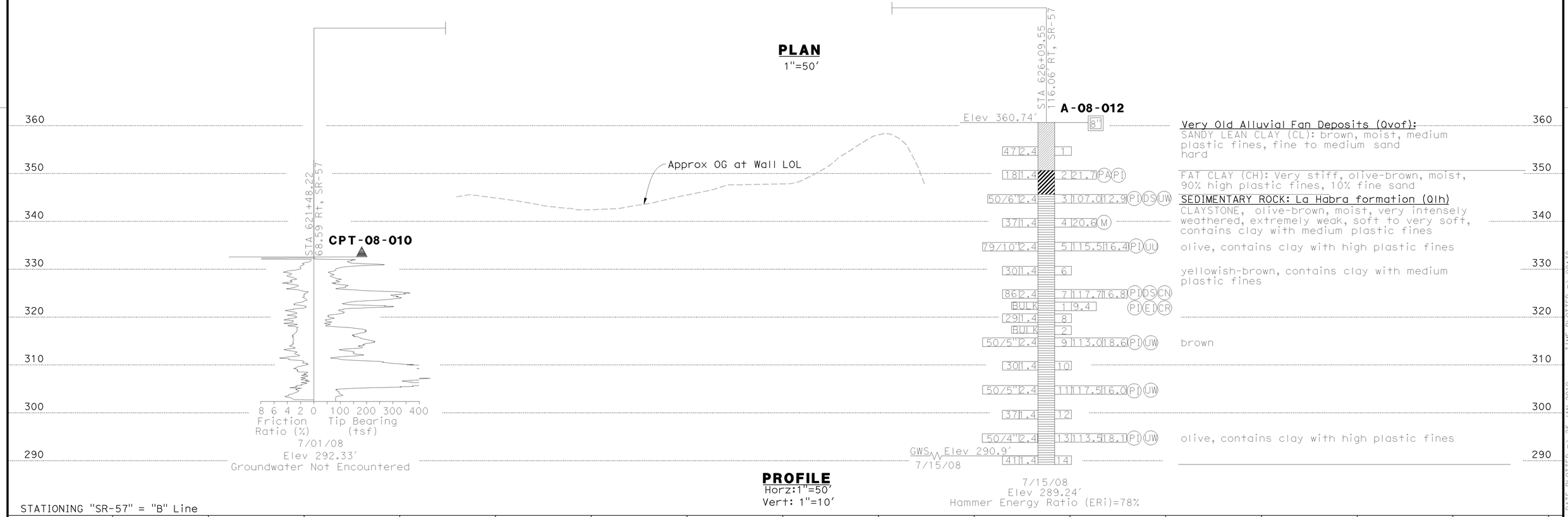

PROFILE
Horz:1"=50'
Vert: 1"=10'

STATIONING "SR-57" = "B" Line
618 619 620 621 622 623 624 625 626 627 628 629 630 631 632 633

DESIGN OVERSIGHT Jon Hanaguchi	DRAWN BY	K. Reyes	R. Bethapudi FIELD INVESTIGATION BY:
11-24-09 SIGN OFF DATE	CHECKED BY	H. Nofal	DATE

PREPARED FOR THE STATE OF CALIFORNIA DEPARTMENT OF TRANSPORTATION

Ayman Salama
PROJECT ENGINEER

BRIDGE NO. 55E0090
POST MILES 19.24

RETAINING WALL No. 622
LOG OF TEST BORINGS SHEET 1 OF 4

ORIGINAL SCALE IN INCHES FOR REDUCED PLANS 0 1 2 3

CU 12220
EA 0F0321

DISREGARD PRINTS BEARING EARLIER REVISION DATES

REVISION DATES (PRELIMINARY STAGE ONLY) 02/18/09 04/07/09 04/17/09 06/08/09

SHEET 14 OF 17

FILE => 55e0090-z-1tb01.dgn

USERNAME => friehard DATE PLOTTED => 25-JAN-2010 TIME PLOTTED => 08:38

DIST	COUNTY	ROUTE	POST MILES TOTAL PROJECT	SHEET No	TOTAL SHEETS
12	Ora	57	18.4/20.9	719	856

Hisham Nofal 06/08/09
GEOTECHNICAL PROFESSIONAL DATE

REGISTERED PROFESSIONAL ENGINEER HISHAM M. NOFAL No. 2765 Exp. 09/30/09 GEOTECHNICAL STATE OF CALIFORNIA

1-25-10
PLANS APPROVAL DATE

The State of California or its officers or agents shall not be responsible for the accuracy or completeness of electronic copies of this plan sheet.

OCTA
550 S. MAIN STREET
ORANGE, CA 92863

CH2M HILL
6 HUTTON CENTRE DRIVE, SUITE 700
SANTA ANA, CA 92707

REFERENCE: CALTRANS SOIL & ROCK LOGGING, CLASSIFICATION, AND PRESENTATION MANUAL (JUNE 2007)

GROUP SYMBOLS AND NAMES

Graphic/Symbol	Group Names
GW	Well-graded GRAVEL Well-graded GRAVEL with SAND
GP	Poorly graded GRAVEL Poorly graded GRAVEL with SAND
GW-GM	Well-graded GRAVEL with SILT Well-graded GRAVEL with SILT and SAND
GW-GC	Well-graded GRAVEL with CLAY (or SILTY CLAY) Well-graded GRAVEL with CLAY and SAND (or SILTY CLAY and SAND)
GP-GM	Poorly graded GRAVEL with SILT Poorly graded GRAVEL with SILT and SAND
GP-GC	Poorly graded GRAVEL with CLAY (or SILTY CLAY) Poorly graded GRAVEL with CLAY and SAND (or SILTY CLAY and SAND)
GM	SILTY GRAVEL SILTY GRAVEL with SAND
GC	CLAYEY GRAVEL CLAYEY GRAVEL with SAND
GC-GM	SILTY, CLAYEY GRAVEL SILTY, CLAYEY GRAVEL with SAND
SW	Well-graded SAND Well-graded SAND with GRAVEL
SP	Poorly graded SAND Poorly graded SAND with GRAVEL
SW-SM	Well-graded SAND with SILT Well-graded SAND with SILT and GRAVEL
SW-SC	Well-graded SAND with CLAY (or SILTY CLAY) Well-graded SAND with CLAY and GRAVEL (or SILTY CLAY and GRAVEL)
SP-SM	Poorly graded SAND with SILT Poorly graded SAND with SILT and GRAVEL
SP-SC	Poorly graded SAND with CLAY (or SILTY CLAY) Poorly graded SAND with CLAY and GRAVEL (or SILTY CLAY and GRAVEL)
SM	SILTY SAND SILTY SAND with GRAVEL
SC	CLAYEY SAND CLAYEY SAND with GRAVEL
SC-SM	SILTY, CLAYEY SAND SILTY, CLAYEY SAND with GRAVEL
PT	PEAT
	COBBLES COBBLES and BOULDERS BOULDERS

Graphic/Symbol	Group Names
CL	Lean CLAY Lean CLAY with SAND Lean CLAY with GRAVEL SANDY lean CLAY SANDY lean CLAY with GRAVEL GRAVELLY lean CLAY GRAVELLY lean CLAY with SAND
CL-ML	SILTY CLAY SILTY CLAY with SAND SILTY CLAY with GRAVEL SANDY SILTY CLAY SANDY SILTY CLAY with GRAVEL GRAVELLY SILTY CLAY GRAVELLY SILTY CLAY with SAND
ML	SILT SILT with SAND SILT with GRAVEL SANDY SILT SANDY SILT with GRAVEL GRAVELLY SILT GRAVELLY SILT with SAND
OL	ORGANIC lean CLAY ORGANIC lean CLAY with SAND ORGANIC lean CLAY with GRAVEL SANDY ORGANIC lean CLAY SANDY ORGANIC lean CLAY with GRAVEL GRAVELLY ORGANIC lean CLAY GRAVELLY ORGANIC lean CLAY with SAND
OL	ORGANIC SILT ORGANIC SILT with SAND ORGANIC SILT with GRAVEL SANDY ORGANIC SILT SANDY ORGANIC SILT with GRAVEL GRAVELLY ORGANIC SILT GRAVELLY ORGANIC SILT with SAND
CH	Fat CLAY Fat CLAY with SAND Fat CLAY with GRAVEL SANDY fat CLAY SANDY fat CLAY with GRAVEL GRAVELLY fat CLAY GRAVELLY fat CLAY with SAND
MH	Elastic SILT Elastic SILT with SAND Elastic SILT with GRAVEL SANDY elastic SILT SANDY elastic SILT with GRAVEL GRAVELLY elastic SILT GRAVELLY elastic SILT with SAND
OH	ORGANIC fat CLAY ORGANIC fat CLAY with SAND ORGANIC fat CLAY with GRAVEL SANDY ORGANIC fat CLAY SANDY ORGANIC fat CLAY with GRAVEL GRAVELLY ORGANIC fat CLAY GRAVELLY ORGANIC fat CLAY with SAND
OH	ORGANIC elastic SILT ORGANIC elastic SILT with SAND ORGANIC elastic SILT with GRAVEL SANDY ORGANIC elastic SILT SANDY ORGANIC elastic SILT with GRAVEL GRAVELLY ORGANIC elastic SILT GRAVELLY ORGANIC elastic SILT with SAND
OL/OH	ORGANIC SOIL ORGANIC SOIL with SAND ORGANIC SOIL with GRAVEL SANDY ORGANIC SOIL SANDY ORGANIC SOIL with GRAVEL GRAVELLY ORGANIC SOIL GRAVELLY ORGANIC SOIL with SAND

FIELD AND LABORATORY TESTING

- (C) Consolidation (ASTM D 2435)
- (CL) Collapse Potential (ASTM D 5333)
- (CP) Compaction Curve (CTM 216)
- (CR) Corrosivity Testing (CTM 643, CTM 422, CTM 417)
- (CU) Consolidated Undrained Triaxial (ASTM D 4767)
- (DS) Direct Shear (ASTM D 3080)
- (EI) Expansion Index (ASTM D 4829)
- (M) Moisture Content (ASTM D 2216)
- (OC) Organic Content-% (ASTM D 2974)
- (P) Permeability (CTM 220)
- (PA) Particle Size Analysis (ASTM D 422)
- (PI) Plasticity Index (AASHTO T 90) Liquid Limit (AASHTO T 89)
- (PL) Point Load Index (ASTM D 5731)
- (PM) Pressure Meter
- (PP) Pocket Penetrometer
- (R) R-Value (CTM 301)
- (SE) Sand Equivalent (CTM 217)
- (SG) Specific Gravity (AASHTO T 100)
- (SL) Shrinkage Limit (ASTM D 427)
- (SW) Swell Potential (ASTM D 4546)
- (TV) Pocket Torvane
- (UC) Unconfined Compression-Soil (ASTM D 2166) Unconfined Compression-Rock (ASTM D 2938)
- (UU) Unconsolidated Undrained Triaxial (ASTM D 2850)
- (UW) Unit Weight (ASTM D 4767)
- (VS) Vane Shear (AASHTO T 223)

APPARENT DENSITY OF COHESIONLESS SOILS

Description	SPT N_{60} (Blows / 12 inches)
Very loose	0 - 4
Loose	5 - 10
Medium Dense	11 - 30
Dense	31 - 50
Very Dense	> 50

MOISTURE

Description	Criteria
Dry	Absence of moisture, dusty, dry to the touch
Moist	Damp but no visible water
Wet	Visible free water, usually soil is below water table

PERCENT OR PROPORTION OF SOILS

Description	Criteria
Trace	Particles are present but estimated to be less than 5%
Few	5 to 10%
Little	15 to 25%
Some	30 to 45%
Mostly	50 to 100%

PARTICLE SIZE

Description		Size
Boulder		> 12"
Cobble		3" to 12"
Gravel	Coarse	3/4" to 3"
	Fine	No. 4 to 3/4"
Sand	Coarse	No. 10 to No. 4
	Medium	No. 40 to No. 10
	Fine	No. 200 to No. 40

CEMENTATION

Description	Criteria
Weak	Crumbles or breaks with handling or little finger pressure.
Moderate	Crumbles or breaks with considerable finger pressure.
Strong	Will not crumble or break with finger pressure.

CONSISTENCY OF COHESIVE SOILS

Description	Unconfined Compressive Strength (tsf)	Pocket Penetrometer Measurement (tsf)	Torvane Measurement (tsf)	Field Approximation
Very Soft	< 0.25	< 0.25	< 0.12	Easily penetrated several inches by fist
Soft	0.25 to 0.50	0.25 to 0.50	0.12 to 0.25	Easily penetrated several inches by thumb
Medium Stiff	0.50 to 1.0	0.50 to 1.0	0.25 to 0.50	Penetrated several inches by thumb with moderate effort
Stiff	1 to 2	1 to 2	0.50 to 1.0	Readily indented by thumb but penetrated only with great effort
Very Stiff	2 to 4	2 to 4	1.0 to 2.0	Readily indented by thumbnail
Hard	> 4.0	> 4.0	> 2.0	Indented by thumbnail with difficulty

PLASTICITY OF FINE-GRAINED SOILS

Description	Criteria
Nonplastic	A 1/8-inch thread cannot be rolled at any water content.
Low	The thread can barely be rolled and the lump cannot be formed when drier than the plastic limit.
Medium	The thread is easy to roll and not much time is required to reach the plastic limit. The thread cannot be rerolled after reaching the plastic limit. The lump crumbles when drier than the plastic limit.
High	It takes considerable time rolling and kneading to reach the plastic limit. The thread can be rerolled several times after reaching the plastic limit. The lump can be formed without crumbling when drier than the plastic limit.

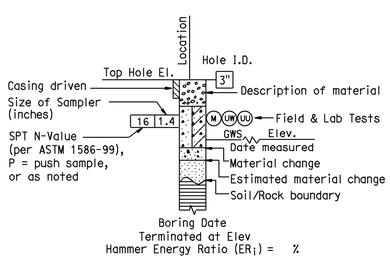

ROTARY BORING

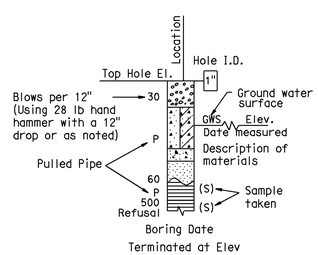

HAND BORING

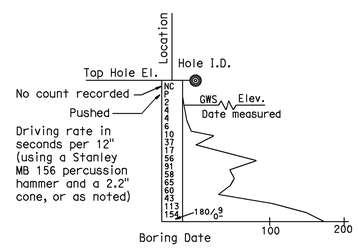

DYNAMIC CONE PENETRATION BORING

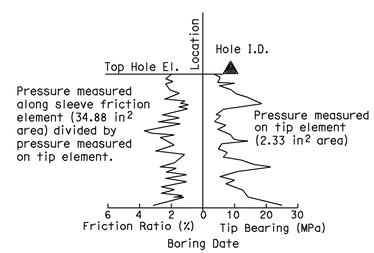

CONE PENETRATION TEST (CPT) SOUNDING

BOREHOLE IDENTIFICATION

Symbol	Hole Type	Description
Size	A	Auger Boring
Size	R P	Rotary drilled boring Rotary percussion boring (air)
Size HQ	R	Rotary drilled diamond core
Size	HD HA	Hand driven (1-inch soil tube) Hand Auger
●	D	Dynamic Cone Penetration Boring
◕	B	Hollow Stem Auger Boring (HSA)
▲	CPT	Cone Penetration Test (ASTM D 5778-95)
□	O	Other

Note: Size in inches.

RETAINING WALL No. 622

SOIL LEGEND

LOG OF TEST BORINGS SHEET 2 OF 4

Jon Hamaguchi
DESIGN OVERSIGHT Jon Hamaguchi
11-24-09
SIGN OFF DATE

DRAWN BY K. Reyes
CHECKED BY H. Nofal

R. Bethapudi
FIELD INVESTIGATION BY:
DATE

PREPARED FOR THE STATE OF CALIFORNIA DEPARTMENT OF TRANSPORTATION

Ayman Salama
PROJECT ENGINEER

BRIDGE NO. 55E0090
POST MILES 19.24

ORIGINAL SCALE IN INCHES FOR REDUCED PLANS 0 1 2 3

CU 12220
EA 0F0321

DISREGARD PRINTS BEARING EARLIER REVISION DATES
REVISION DATES (PRELIMINARY STAGE ONLY) 02/27/09 04/27/09 04/27/09 06/08/09

SHEET 15 OF 17

FILE => 55e0090-z-1tb02.dgn

USERNAME => trlenard DATE PLOTTED => 25-JAN-2010 TIME PLOTTED => 08:38

REFERENCE: CALTRANS SOIL & ROCK LOGGING, CLASSIFICATION, AND PRESENTATION MANUAL (JUNE 2007)

DIST	COUNTY	ROUTE	POST MILES TOTAL PROJECT	SHEET No	TOTAL SHEETS
12	Ora	57	18.4/20.9	720	856

GEOTECHNICAL PROFESSIONAL — 06/08/09 DATE

1-25-10
PLANS APPROVAL DATE

REGISTERED PROFESSIONAL ENGINEER — HISHAM M. NOFAL No. 2765 Exp. 09/30/09 GEOTECHNICAL — STATE OF CALIFORNIA

The State of California or its officers or agents shall not be responsible for the accuracy or completeness of electronic copies of this plan sheet.

OCTA
550 S. MAIN STREET
ORANGE, CA 92863

CH2M HILL
6 HUTTON CENTRE DRIVE, SUITE 700
SANTA ANA, CA 92707

PERCENT CORE RECOVERY (REC) & ROCK QUALITY DESIGNATION (RQD)

$$REC = \frac{\sum \text{Length of the recovered core pieces (inches)}}{\text{Total length of core run (inches)}} \times 100\%$$

$$RQD = \frac{\sum \text{Length of intact core pieces} \geq 4''}{\text{Total length of core run (inches)}} \times 100\%$$

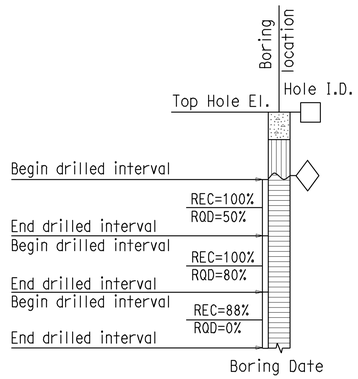

RELATIVE STRENGTH OF INTACT ROCK

Term	Uniaxial Compressive Strength (PSI)
Extremely Strong	> 30,000
Very Strong	14,500 - 30,000
Strong	7,000 - 14,500
Medium Strong	3,500 - 7,000
Weak	700 - 3,500
Very Weak	150 - 700
Extremely Weak	< 150

BEDDING SPACING

Description	Thickness / Spacing
Massive	Greater than 10 ft
Very thickly bedded	3 to 10 ft
Thickly bedded	1 to 3 ft
Moderately bedded	3-5/8" to 1 ft
Thinly bedded	1-1/4" to 3-5/8"
Very thinly bedded	3/8" to 1-1/4"
Laminated	Less than 3/8"

LEGEND OF ROCK MATERIALS

- IGNEOUS ROCK
- SEDIMENTARY ROCK
- METAMORPHIC ROCK

ROCK HARDNESS

Description	Criteria
Extremely Hard	Specimen cannot be scratched with a pocket knife or sharp pick; can only be chipped with repeated heavy hammer blows.
Very Hard	Specimen cannot be scratched with a pocket knife or sharp pick. Breaks with repeated heavy hammer blows.
Hard	Specimen can be scratched with a pocket knife or sharp pick with difficulty (heavy pressure). Heavy hammer blows required to break specimen.
Moderately Hard	Specimen can be scratched with pocket knife or sharp pick with light or moderate pressure. Core breaks with moderate hammer pressure.
Moderately Soft	Specimen can be grooved 1/6" deep with a pocket knife or sharp pick with moderate or heavy pressure. Breaks with light hammer blow or heavy manual pressure.
Soft	Specimen can be grooved or gouged easily by a pocket knife or sharp pick with light pressure, can be scratched with fingernail. Breaks with light to moderate manual pressure.
Very Soft	Specimen can be readily indented, grooved or gouged with fingernail, or carved with a pocket knife. Breaks with light manual pressure.

FRACTURE DENSITY

Description	Observed Fracture Density
Unfractured	No fractures.
Very slightly fractured	Lengths greater than 3 feet.
Slightly fractured	Lengths from 1 to 3 feet with few lengths less than 1 foot or greater than 3 feet.
Moderately fractured	Lengths mostly in 4" to 1 foot range with most lengths about 8"
Intensely fractured	Lengths average from 1 to 4" with scattered fragmented intervals with lengths less than 4"
Very intensely fractured	Mostly chips and fragments with a few scattered short core lengths.

Combination descriptors (such as "Very intensely to intensely fractured") are used where equal distribution of both fracture density characteristics is present over a significant interval or exposure, or where characteristics are "in between" the descriptor definitions. Only two adjacent descriptors may be combined.

WEATHERING DESCRIPTORS FOR INTACT ROCK

Description	Diagnostic features					General Characteristics
	Chemical Weathering-Discoloration and/or oxidation		Mechanical Weathering-Grain boundary conditions (disaggregation) primarily for granitics and some coarse-grained sediments	Texture and Solutioning		
	Body of Rock	Fracture Surfaces		Texture	Solutioning	
Fresh	No discoloration, not oxidized.	No discoloration or oxidation.	No separation, intact (tight).	No change.	No solutioning.	Hammer rings when crystalline rocks are struck.
Slightly Weathered	Discoloration or oxidation is limited to surface of, or short distance from, fractures; some feldspar crystals are dull.	Minor to complete discoloration or oxidation of most surfaces.	No visible separation, intact (tight).	Preserved.	Minor leaching of some soluble minerals may be noted.	Hammer rings when crystalline rocks are struck. Body of rock not weakened.
Moderately Weathered	Discoloration or oxidation extends from fractures usually throughout; Fe-Mg minerals are "rusty," feldspar crystals are "cloudy."	All fracture surfaces are discolored or oxidized.	Partial separation of boundaries visible.	Generally preserved.	Soluble minerals may be mostly leached.	Hammer does not ring when rock is struck. Body of rock is slightly weakened.
Intensely Weathered	Discoloration or oxidation throughout; all feldspars and Fe-Mg minerals are altered to clay to some extent; or chemical alteration produces in-situ disaggregation, see grain boundary conditions.	All fracture surfaces are discolored or oxidized, surfaces friable.	Partial separation, rock is friable; in semiarid conditions granitics are disaggregated.	Texture altered by chemical disintegration (hydration, argillation).	Leaching of soluble minerals may be complete.	Dull sound when struck with hammer, usually can be broken with moderate to heavy manual pressure or by light hammer blow without reference to planes of weakness such as incipient or hairline fractures, or veinlets. Rock is significantly weakened.
Decomposed	Discolored or oxidized throughout, but resistant minerals such as quartz may be unaltered; all feldspars and Fe-Mg minerals are completely altered to clay.		Complete separation of grain boundaries (disaggregated).	Resembles a soil, partial or complete remnant rock structure may be preserved; leaching of soluble minerals usually complete.		Can be granulated by hand. Resistant minerals such as quartz may be present as "stringers" or "dikes."

Combination descriptors (such as "slightly weathered to fresh") are permissible where equal distribution of both weathering characteristics is present over significant intervals or where characteristics present are "in between" the diagnostic feature. However, combination descriptors should not be used where significant, identifiable zones can be delineated. Only two adjacent descriptors may be combined. "Very intensely weathered" is the combination descriptor for "intensely weathered to decomposed."

DESIGN OVERSIGHT — Jon Hamaguchi
11-24-09
SIGN OFF DATE

DRAWN BY: K. Reyes
CHECKED BY: H. Nofal

R. Bethapudi
FIELD INVESTIGATION BY:
DATE

PREPARED FOR THE STATE OF CALIFORNIA DEPARTMENT OF TRANSPORTATION

Ayman Salama
PROJECT ENGINEER

BRIDGE NO. 55E0090
POST MILES 19.24

RETAINING WALL No. 622
ROCK LEGEND
LOG OF TEST BORINGS SHEET 3 OF 4

ORIGINAL SCALE IN INCHES FOR REDUCED PLANS 0 1 2 3

CU 12220
EA 0F0321

DISREGARD PRINTS BEARING EARLIER REVISION DATES
REVISION DATES: 02/18/09 03/07/09 04/27/09 06/08/09

SHEET 16 OF 17

FILE => 55e0090-z-ltb03.dgn

USERNAME => trlenard DATE PLOTTED => 25-JAN-2010 TIME PLOTTED => 08:38

FED. ROAD DIST. NO.	STATE	F. A. PROJECT NO.	SHEET NO.	TOTAL SHEETS
7	CALIF.			

DIST.	COUNTY	ROUTE	SECTION	SHEET NO.	TOTAL SHEETS
07	ORA.	57	PM 20.2	160	180

DATE EXPIRATION: September 30, 1968

LEGEND OF BORING OPERATIONS

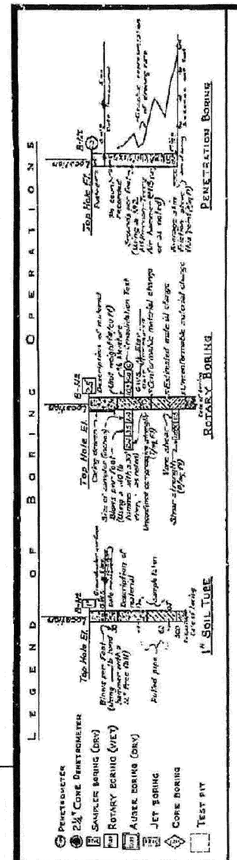

LEGEND OF EARTH MATERIALS

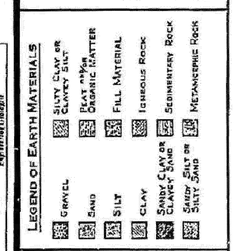

CLASSIFICATION OF MATERIAL BASED ON STANDARD GRADE SIZE LIMITS

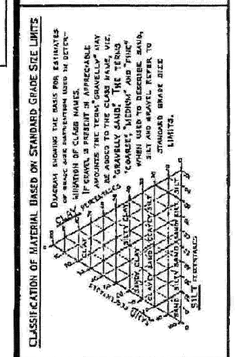

NOTE: Classification of earth material as shown on this sheet is based upon field inspection and is not to be construed to imply mechanical analysis.

FIELD STUDY	Jr. A. Cano	4-17-67
DRAWN	Jr. A. Cano	4-17-67
CHECKED	Jr. R. Corbalev	4-24-67

Approved Recommended: Engineer in Charge

BRIDGE DEPARTMENT
ENGINEERING GEOLOGY SECTION

160

BENCH MARK

B.M.# 629-D-66 Elev. 361.18
Fd. anchor bolt on top of northeast pedestal of Hathaway Oil Well No. 8

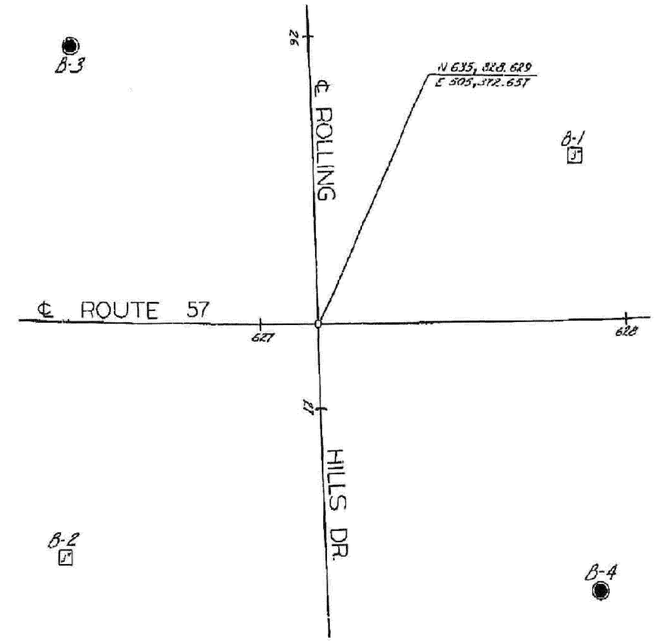

PLAN

Scale: 1" = 20'

DIVISION OF ENGINEERING SERVICES - GEOTECHNICAL SERVICES					
As-Built Log of Test Borings sheet is considered an informational document only. As such, the State of California registration seal with signature, license number and registration certificate expiration date confirm that this is a true and accurate copy of the original document. This drawing is available and presented only for the convenience of any bidder, contractor or other interested party.					
DIST.	COUNTY	ROUTE	POST MILES-TOTAL PROJECT	Sheet No.	Total Sheets
12	Ora	57	18.4/20.9	721	856
Hisham M. Nofal — REGISTERED CIVIL ENGINEER				06/08/09 DATE	
RETAINING WALL NO. 622					
LOG OF TEST BORINGS SHEET 4 OF 4					
NOTE: A COPY OF THIS LOG OF TEST BORINGS IS AVAILABLE AT OFFICE OF STRUCTURE MAINTENANCE AND INVESTIGATIONS, SACRAMENTO, CALIFORNIA			CU: 12220 EA: 0F0321	BRIDGE No. 55E0090	
To accompany plans dated 1-25-10				Sheet 17	of 17

REGISTERED PROFESSIONAL ENGINEER
HISHAM M. NOFAL
No. 2765
Exp. 09/30/09
GEOTECHNICAL
STATE OF CALIFORNIA

NO GROUND WATER ENCOUNTERED DURING THIS INVESTIGATION BY BRIDGE DEPT. GEOLOGY SECTION. DATE April, 1967

INFORMATION ON ACTUAL FOUNDATION CONDITIONS ENCOUNTERED IS ON FILE IN BRIDGE GEOLOGY SECTION

PROFILE

Scale: Vert. 1" = 10'
Horiz. 1" = 20'

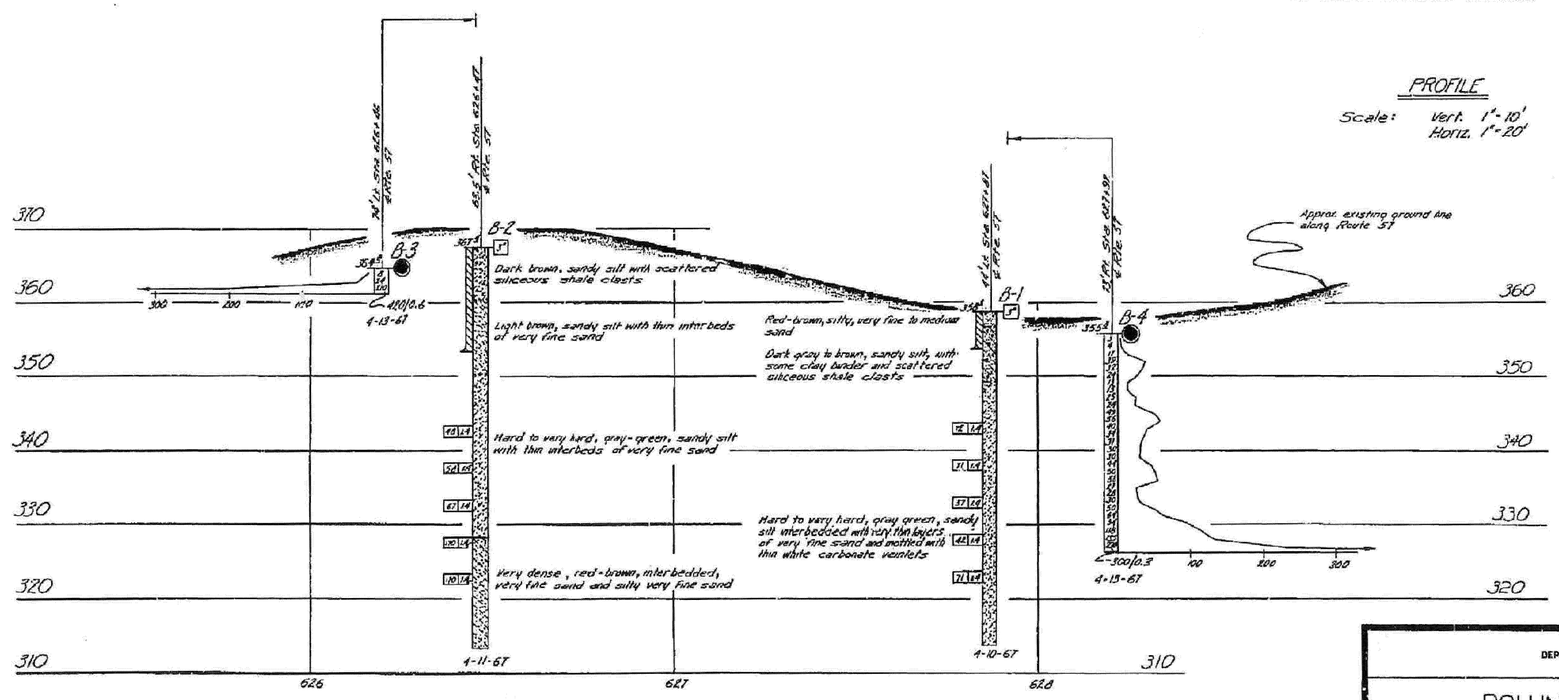

AS BUILT PLANS
Contract No. 07-032134
Date Completed
Document No. 70001578

STATE OF CALIFORNIA
DEPARTMENT OF PUBLIC WORKS
DIVISION OF HIGHWAYS

ROLLING HILLS DRIVE UNDERCROSSING

LOG OF TEST BORINGS

SHEET	OF	SCALE As Noted	BRIDGE 55-0003	FILE	DRAWING S 508 (5-7)
10	10				

Chg. 07206
W.A 032131

Dimeguard prints bearing earlier numbers → PREL. DRAWING NO. PR-

FILENAME => 55e0090-z-1tb04.tif

USERNAME => jramire3 DATE PLOTTED => 24-NOV-2009 TIME PLOTTED => 16:18

DIST	COUNTY	ROUTE	POST MILES TOTAL PROJECT	SHEET No	TOTAL SHEETS
12	Ora	57	18.4/20.9	722	856

Milind Desai
REGISTERED CIVIL ENGINEER 06/08/09
DATE

1-25-10
PLANS APPROVAL DATE

REGISTERED PROFESSIONAL ENGINEER MILIND R. DESAI No. C51437 Exp. 6/30/10 CIVIL STATE OF CALIFORNIA

The State of California or its officers or agents shall not be responsible for the accuracy or completeness of electronic copies of this plan sheet.

OCTA
550 S. MAIN STREET
ORANGE, CA 92863

CH2M HILL
6 HUTTON CENTRE DRIVE, SUITE 700
SANTA ANA, CA 92707

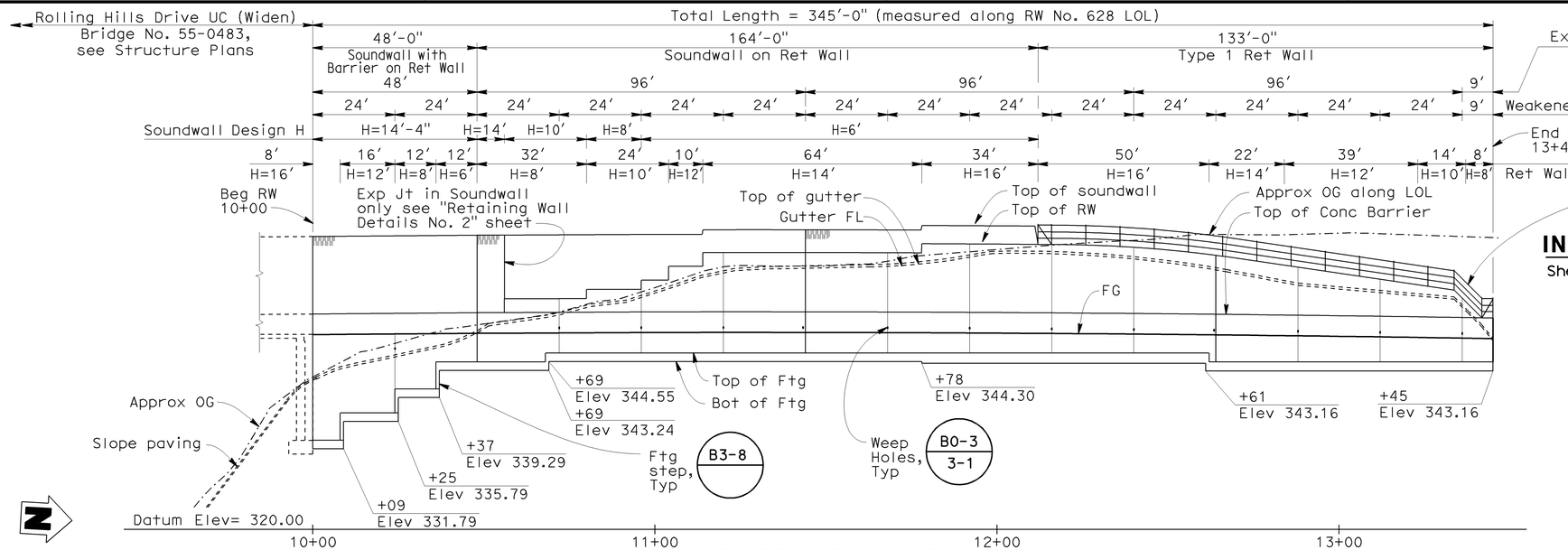

MIRRORED ELEVATION

Horiz: 1"=20'
Vert: 1"=10'

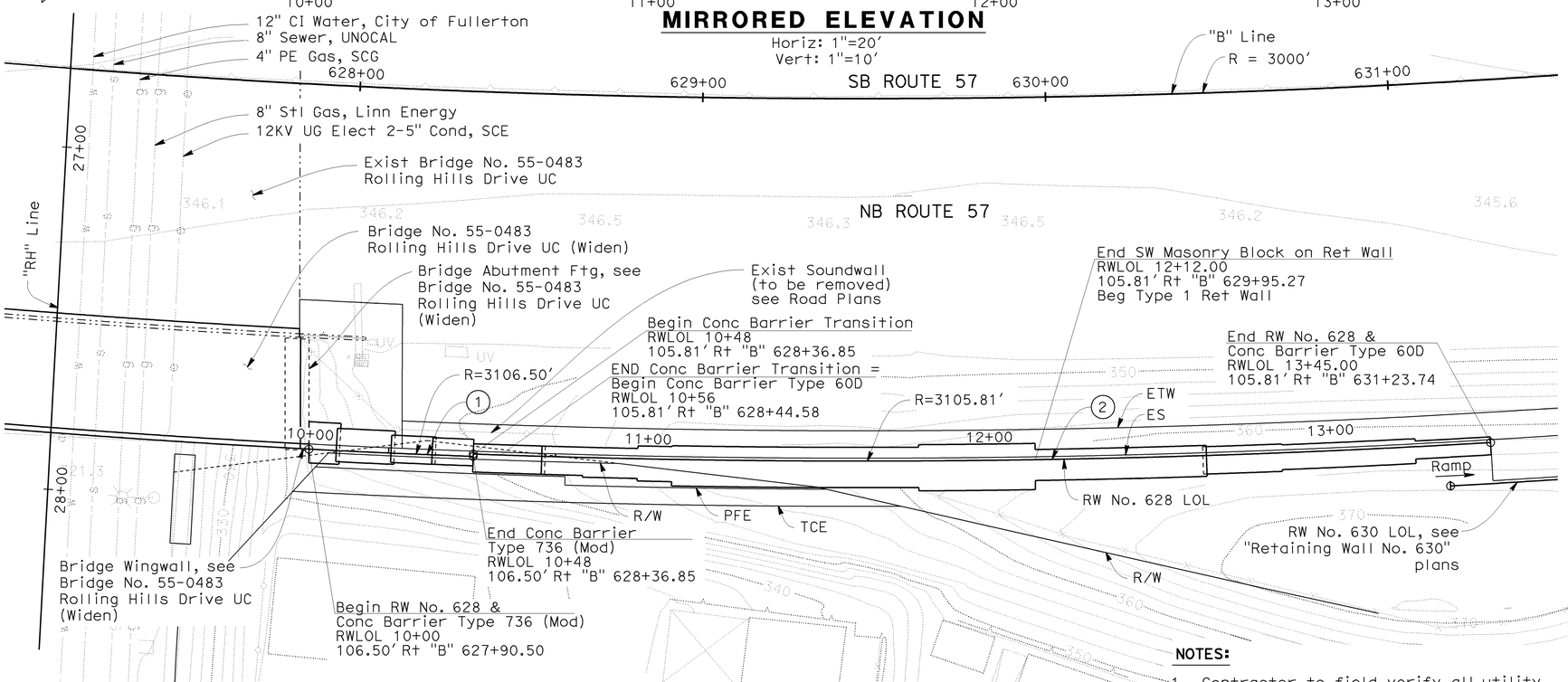

PLAN

1"=20'

CURVE DATA

NO	R	Δ	T	L
1	3106.50'	0°53'07"	24.00'	48.00'
2	3105.81'	5°28'45"	148.62'	297.00'

INDEX TO PLANS

Sheet No.	Title
1.	GENERAL PLAN
2.	TYPICAL SECTIONS
3.	EXCAVATION DETAILS
4.	RETAINING WALL DETAILS NO. 1
5.	RETAINING WALL DETAILS NO. 2
6.	SOUNDWALL ON RETAINING WALL-MASONRY BLOCK - DETAILS NO. 1
7.	SOUNDWALL ON RETAINING WALL-MASONRY BLOCK - DETAILS NO. 2
8.	SOUNDWALL - MASONRY BLOCK WITH BARRIER ON RETAINING WALL-DETAILS NO. 1
9.	SOUNDWALL - MASONRY BLOCK WITH BARRIER ON RETAINING WALL-DETAILS NO. 2
10.	SOUNDWALL MASONRY BLOCK MISCELLANEOUS DETAILS
11.	ARCHITECTURAL TREATMENT DETAILS
12.	LOG OF TEST BORINGS SHEET 1 OF 4
13.	LOG OF TEST BORINGS SHEET 2 OF 4
14.	LOG OF TEST BORINGS SHEET 3 OF 4
15.	LOG OF TEST BORINGS SHEET 4 OF 4

STANDARD PLANS DATED MAY 2006

A10A	ACRONYMS AND ABBREVIATIONS (SHEET 1 OF 2)
A10B	ACRONYMS AND ABBREVIATIONS (SHEET 2 OF 2)
A10C	SYMBOLS (SHEET 1 OF 2)
A10D	SYMBOLS (SHEET 2 OF 2)
A62B	LIMITS OF PAYMENT FOR EXCAVATION AND BACKFILL BRIDGE SURCHARGE AND WALL
A76A	CONCRETE BARRIER TYPE 60
B0-3	BRIDGE DETAILS
B3-1	RETAINING WALL TYPE 1 H=4' THROUGH 30'
B3-8	RETAINING WALL DETAILS NO. 1
B3-9	RETAINING WALL DETAILS NO. 2
B11-47	CABLE RAILING
B11-56	CONCRETE BARRIER TYPE 736

Standard Plan Sheet No.
Detail No.

RETAINING WALL NO 628 QUANTITIES

STRUCTURE EXCAVATION (RETAINING WALL)	1,535	CY
STRUCTURE EXCAVATION (TYPE Y-1) (AERIALLY DEPOSITED LEAD)	83	CY
STRUCTURE BACKFILL (RETAINING WALL)	1,255	CY
STRUCTURAL CONCRETE, RETAINING WALL	395	CY
FORMED RELIEF TEXTURE (FLOWERED PATTERN)	1,157	SQFT
FRACTURED RIB TEXTURE	1,157	SQFT
SOUND WALL (BARRIER)(MASONRY BLOCK)	544	SQFT
SOUND WALL (MASONRY BLOCK)	870	SQFT
BAR REINFORCING STEEL (RETAINING WALL)	38,900	LB
MINOR CONCRETE (MISCELLANEOUS CONSTRUCTION)	11	CY
CABLE RAILING	136	LF
CONCRETE BARRIER (TYPE 60D)	285	LF
CONCRETE BARRIER (TYPE 736 MODIFIED)	48	LF

NOTES:

1. Contractor to field verify all utility locations prior to retaining wall construction.
2. For Retaining Wall Elevation Table and Typical Sections, see "Typical Sections" sheet.

Jon Hamaguchi
DESIGN OVERSIGHT Jon Hamaguchi
12-17-09
SIGN OFF DATE

	BY	CHECKED			
DESIGN	M. Desai / J. Powell	M. Atiqullah / A. Issa	LRFD	LIVE LOADING: HL-93 AND PERMIT (P-15) DESIGN LOAD	
DETAILS	J. Powell	M. Atiqullah / A. Issa	LAYOUT	N. Morales	M. Atiqullah
QUANTITIES	Y. Chiu	B. Ho	SPECIFICATIONS	M. Remolador	PLANS AND SPECS COMPARED M. Atiqullah

PREPARED FOR THE STATE OF CALIFORNIA DEPARTMENT OF TRANSPORTATION

Ayman Salama
PROJECT ENGINEER

CU 12220
EA 0F0321

BRIDGE NO. 55E0091
POST MILES 19.36

RETAINING WALL NO. 628
GENERAL PLAN

DESIGN GENERAL PLAN SHEET (ENGLISH) (REV. 2/25/05)

ORIGINAL SCALE IN INCHES FOR REDUCED PLANS 0 1 2 3

DISREGARD PRINTS BEARING EARLIER REVISION DATES

REVISION DATES (PRELIMINARY STAGE ONLY) 02/18/09 04/07/09 04/17/09 06/08/09

SHEET 1 OF 15

FILE => 55e0091-a-gp01.dgn

USERNAME => rrmikesi DATE PLOTTED => 26-JAN-2010 TIME PLOTTED => 07:46

DIST	COUNTY	ROUTE	POST MILES TOTAL PROJECT	SHEET No	TOTAL SHEETS
12	Ora	57	18.4/20.9	723	856

REGISTERED CIVIL ENGINEER 06/08/09 DATE

1-25-10
PLANS APPROVAL DATE

REGISTERED PROFESSIONAL ENGINEER JOHN W. POWELL No. C71463 Exp. 12/31/09 CIVIL STATE OF CALIFORNIA

The State of California or its officers or agents shall not be responsible for the accuracy or completeness of electronic copies of this plan sheet.

OCTA
550 S. MAIN STREET
ORANGE, CA 92863

CH2M HILL
6 HUTTON CENTRE DRIVE, SUITE 700
SANTA ANA, CA 92707

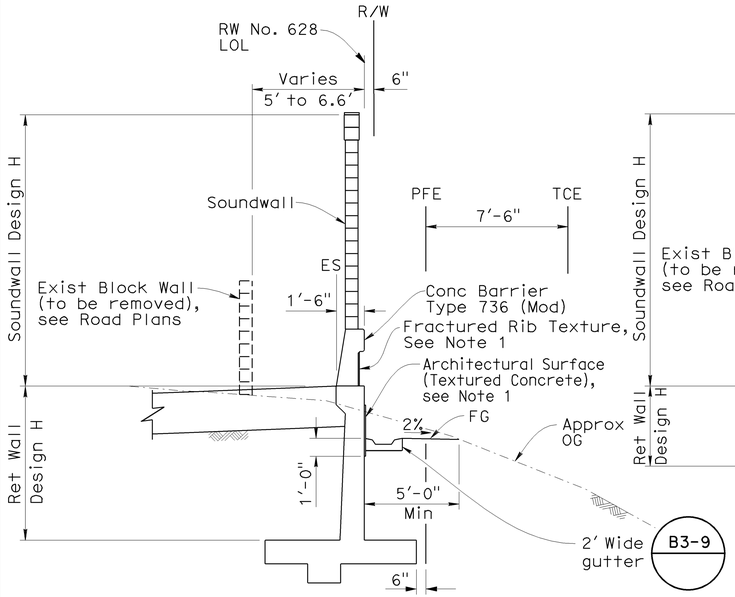

TYPICAL SECTION
1/4"=1'-0"
Sta 10+00 to 10+48.00

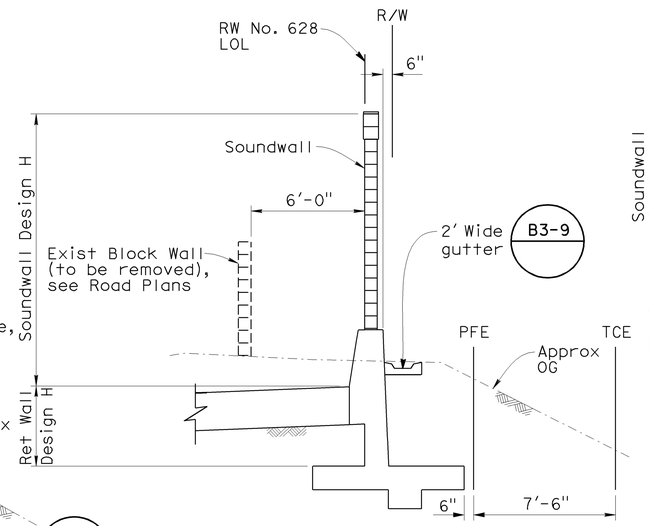

TYPICAL SECTION
1/4"=1'-0"
Sta 10+48 to 10+56

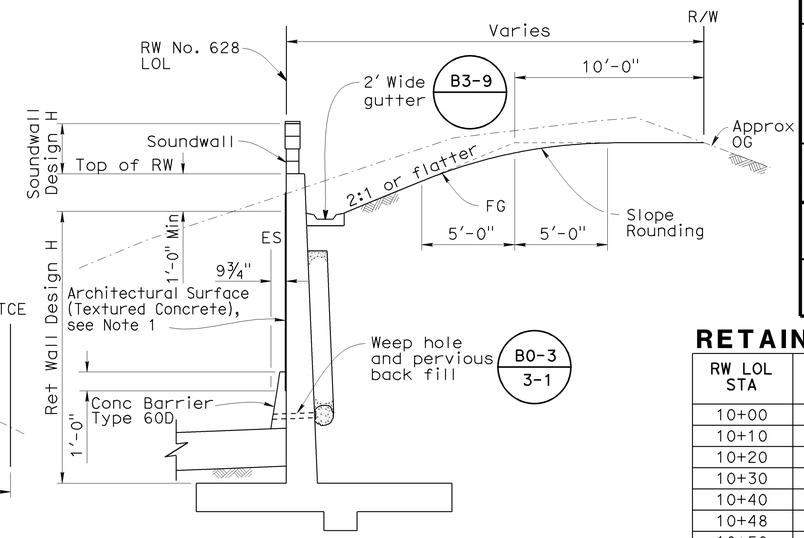

TYPICAL SECTION
1/4"=1'-0"
Sta 10+56 to 12+12

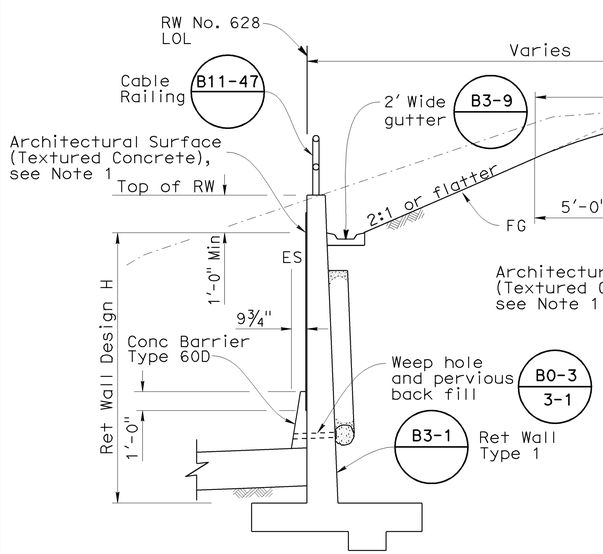

TYPICAL SECTION
1/4"=1'-0"
Sta 12+12 to 12+96.79

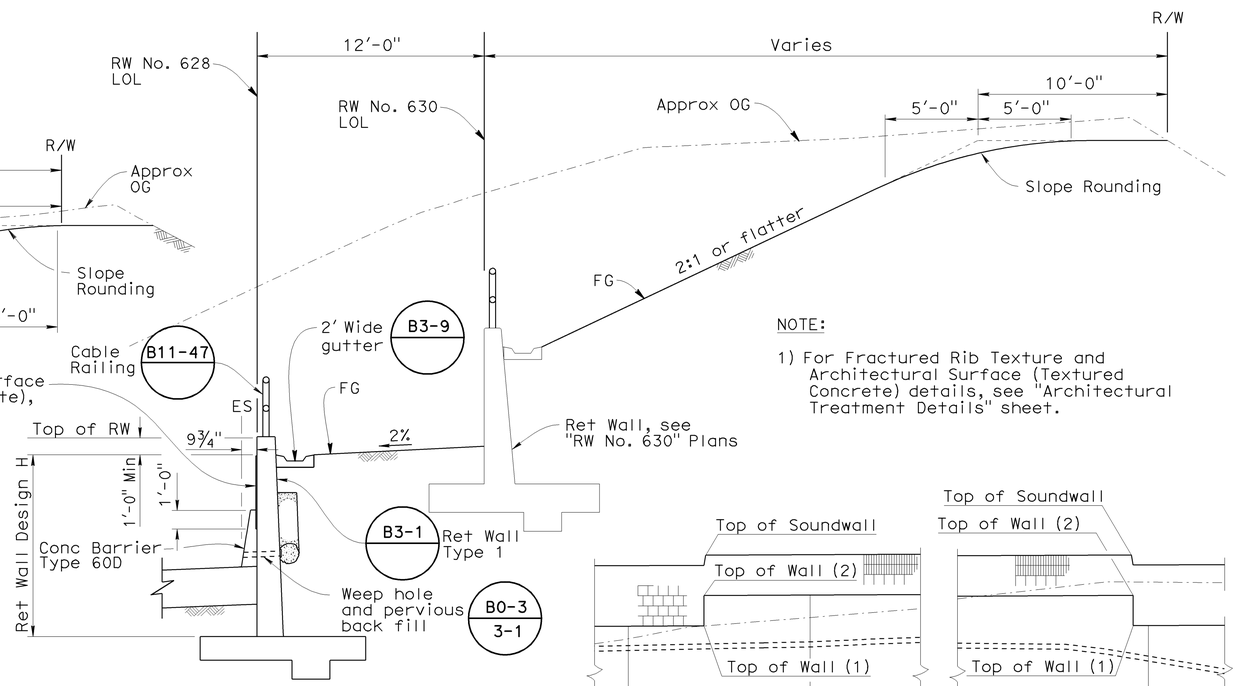

NOTE:

1) For Fractured Rib Texture and Architectural Surface (Textured Concrete) details, see "Architectural Treatment Details" sheet.

TYPICAL SECTION
1/4"=1'-0"
Sta 12+96.79 to 13+45.00

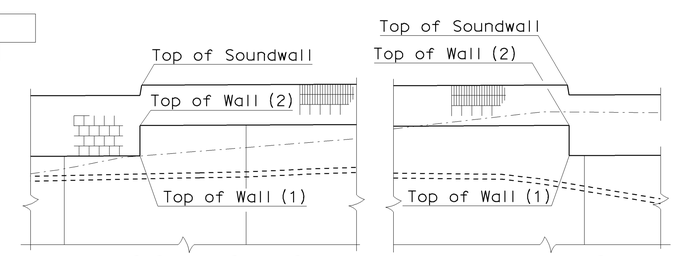

LOCATION OF WALL ELEVATION
No scale

RETAINING WALL ELEVATIONS

RW LOL STA	TOP OF WALL (1)	TOP OF WALL (2)	TOP OF SOUNDWALL
10+00	348.49	-	362.82
10+10	348.55	-	362.88
10+20	348.59	-	362.92
10+30	348.63	-	362.96
10+40	348.66	-	362.99
10+48	348.69	351.69	363.02
10+50	351.69	-	363.03
10+56	351.71	353.71	-
10+60	353.72	-	363.05
10+70	353.75	-	363.08
10+80	353.77	355.10	363.10
10+90	355.12	-	363.12
10+96	355.13	356.46	-
11+00	356.46	-	363.13
11+04	356.47	358.47	-
11+10	358.47	-	363.14
11+13.78	-	-	363.14
11+14	358.48	360.48	363.81
11+20	360.48	-	363.81
11+30	360.48	-	363.81
11+40	360.48	-	363.81
11+50	360.47	-	363.81
11+60	360.46	-	363.80
11+70	360.45	-	363.78
11+77.78	-	-	363.77
11+78	360.44	361.77	364.44
11+80	361.76	-	364.43
11+90	361.74	-	364.41
12+00	361.72	-	364.38
12+10	361.69	-	364.36
12+11.11	-	-	364.35
12+12	361.68	-	361.68
12+20	361.64	-	-
12+30	361.52	-	-
12+40	361.26	-	-
12+50	360.86	-	-
12+60	360.33	-	-
12+70	359.67	-	-
12+80	358.93	-	-
12+90	358.20	-	-
13+00	357.47	-	-
13+10	356.73	-	-
13+20	356.00	-	-
13+30	355.27	-	-
13+33.66	355.00	-	-
13+40	351.82	-	-
13+41.74	350.95	-	-
13+45	350.92	-	-

DESIGN OVERSIGHT Jon Hamaguchi
11-24-09
SIGN OFF DATE

	BY	CHECKED
DESIGN	M. Desai / J. Powell	M. Atiqullah / A. Issa
DETAILS	J. Powell	M. Atiqullah / A. Issa
QUANTITIES	Y. Chiu	B. Ho

PREPARED FOR THE STATE OF CALIFORNIA DEPARTMENT OF TRANSPORTATION

Ayman Salama
PROJECT ENGINEER

BRIDGE NO. 55E0091
POST MILE 19.36

RETAINING WALL NO. 628
TYPICAL SECTIONS

DESIGN DETAIL SHEET (ENGLISH) (REV. 2/25/05)

ORIGINAL SCALE IN INCHES FOR REDUCED PLANS 0 1 2 3

CU 12220
EA 0F0321

DISREGARD PRINTS BEARING EARLIER REVISION DATES

REVISION DATES (PRELIMINARY STAGE ONLY) 02/18/09 04/07/09 04/27/09 06/08/09

SHEET 2 OF 15

FILE => 55e0091-a-ts01.dgn

USERNAME => trmikesl DATE PLOTTED => 26-JAN-2010 TIME PLOTTED => 07:47

DIST	COUNTY	ROUTE	POST MILES TOTAL PROJECT	SHEET No	TOTAL SHEETS
12	Ora	57	18.4/20.9	724	856

REGISTERED CIVIL ENGINEER 06/08/09 DATE

1-25-10
PLANS APPROVAL DATE

REGISTERED PROFESSIONAL ENGINEER
MOHAMMED ATIQULLAH
No. C47027
Exp. 12/31/09
CIVIL
STATE OF CALIFORNIA

The State of California or its officers or agents shall not be responsible for the accuracy or completeness of electronic copies of this plan sheet.

OCTA
550 S. MAIN STREET
ORANGE, CA 92863

CH2M HILL
6 HUTTON CENTRE DRIVE, SUITE 700
SANTA ANA, CA 92707

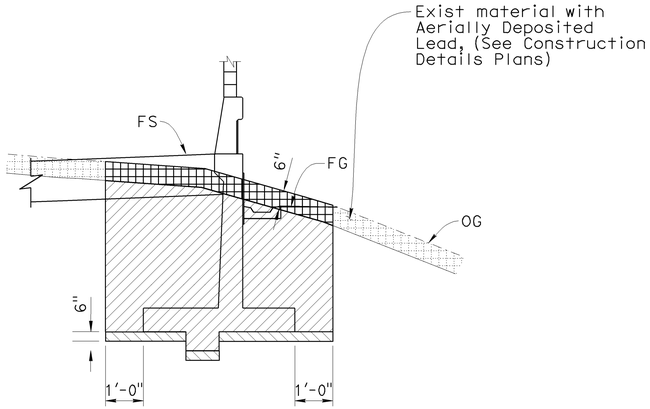

IN CUT

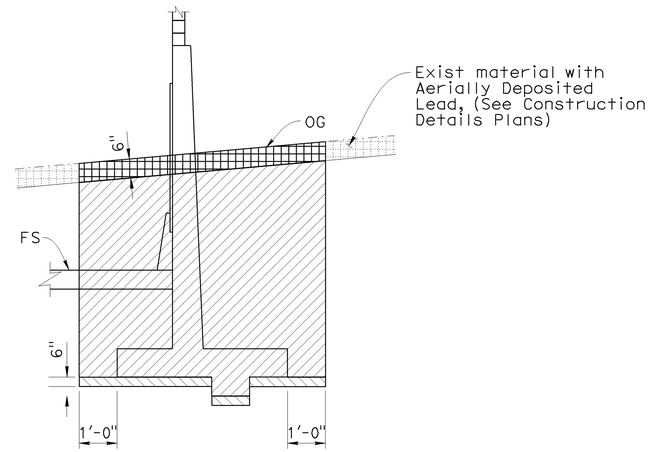

IN CUT

LIMITS OF PAYMENT OF EXCAVATION FOR RETAINING WALL

No Scale

Note:
For Backfill see Caltrans Standard Plans

LEGEND

- Indicates Structure Excavation (Type Y-1) (Aerially Deposited Lead)
- Structure Excavation (Retaining Wall)
- Structure Overexcavation

DESIGN OVERSIGHT Jon Hamaguchi
12-17-09
SIGN OFF DATE

	BY	CHECKED
DESIGN	M. Atiqullah	E. Cutler
DETAILS	A. Issa	E. Cutler
QUANTITIES	Y. Chiu	B. Ho

PREPARED FOR THE STATE OF CALIFORNIA DEPARTMENT OF TRANSPORTATION

Ayman Salama
PROJECT ENGINEER

BRIDGE NO. 55E0091
POST MILE 19.36

RETAINING WALL NO. 628
EXCAVATION DETAILS

DESIGN DETAIL SHEET (ENGLISH) (REV. 2/25/05)

ORIGINAL SCALE IN INCHES FOR REDUCED PLANS 0 1 2 3

CU 12220
EA 0F0321

DISREGARD PRINTS BEARING EARLIER REVISION DATES

REVISION DATES (PRELIMINARY STAGE ONLY) 06/08/09

SHEET 3 OF 15

FILE => 55e0091-b-exc.dgn

USERNAME => trmikesl DATE PLOTTED => 26-JAN-2010 TIME PLOTTED => 07:47

DIST	COUNTY	ROUTE	POST MILES TOTAL PROJECT	SHEET No	TOTAL SHEETS
12	Ora	57	18.4/20.9	725	856

Milind Desai 06/08/09
REGISTERED CIVIL ENGINEER DATE

1-25-10
PLANS APPROVAL DATE

REGISTERED PROFESSIONAL ENGINEER MILIND R. DESAI No. C51437 Exp. 6/30/10 CIVIL STATE OF CALIFORNIA

The State of California or its officers or agents shall not be responsible for the accuracy or completeness of electronic copies of this plan sheet.

OCTA
550 S. MAIN STREET
ORANGE, CA 92863

CH2M HILL
6 HUTTON CENTRE DRIVE, SUITE 700
SANTA ANA, CA 92707

GENERAL NOTES

1. For soundwall and retaining wall architectural finish or texture, see details elsewhere in project plans.
2. For details not shown and drainage notes, see B3-8
3. Footing cover, 1'-6" minimum.
4. Limit of no splicing rebars = 3 times the bottom thickness of the stem.
5. Placement of reinforcements :
   ⓑ & ⓒ bars are spliced together.
   ✕✕ Alternate ⓐ & ⓑ bars are shown in "Detail B".
   Cont = Continuous.
6. For Soundwall & Barrier reinforcement, see "Soundwall Masonry Block on Barriers" sheets in Standard Plans.
7. For Type 1 Retaining Wall Details, see B3-1.

STATION 10+00 TO 10+48				
TABLE OF REINFORCING STEEL DIMENSIONS AND DATA				
Design H	6'	8'	12'	16'
W	7'-9"	8'-0"	9'-9"	12'-0"
C	2'-9"	2'-9"	3'-3"	4'-0"
B	5'-0"	5'-3"	6'-6"	8'-0"
F Spread footing	1'-3"	1'-3"	1'-3"	1'-6"
Batter		½:12	½:12	½:12
Stem thickn. @ Haunch	1'-0"	1'-0"	1'-0"	1'-0"
ⓐ Bars			#6 @16✕✕	#8 @16✕✕
X			Cont	Cont
Y			8'-0"	7'-6"
ⓑ Bars	#5 @ 9	#5 @ 9	#6 @16✕✕	#8 @16✕✕
X	Cont	Cont	Cont	Cont
Y	Cont	Cont	Cont	13'-0"
ⓒ Bars				#6 @16
ⓓ Bars	#5 @12	#5 @12	#6 @ 8	#6 @ 8
Ultimate Bearing Capacity Req'd k/sf	6.0	9.7	9.5	13.6

STATION 10+48 TO 12+12.00					
TABLE OF REINFORCING STEEL DIMENSIONS AND DATA					
Design H	8'	10'	12'	14'	16'
W	8'-3"	8'-9"	10'-3"	11'-9"	13'-6"
C	3'-0"	3'-0"	3'-9"	4'-0"	4'-9"
B	5'-3"	5'-9"	6'-6"	7'-9"	8'-9"
F Spread footing	1'-3"	1'-3"	1'-3"	1'-3"	1'-6"
Batter	½:12	½:12	½:12	½:12	½:12
Stem thickn. @ Top	1'-0"	1'-0"	1'-0"	1'-0"	1'-0"
ⓐ Bars			#6 @16✕✕	#7 @14✕✕	#9 @16✕✕
X			Cont	Cont	Cont
Y			8'-0"	6'-6"	7'-6"
ⓑ Bars	#5 @12	#5 @ 8	#6 @16✕✕	#7 @14✕✕	#9 @16✕✕
X	Cont	Cont	Cont	Cont	Cont
Y	Cont	Cont	Cont	10'-6"	13'-0"
ⓒ Bars				#6 @14	#6 @16
ⓓ Bars	#5 @12	#5 @12	#6 @ 8	#6 @ 7	#6 @ 6
Ultimate Bearing Capacity Req'd k/sf	4.0	7.1	6.7	9.5	11.5

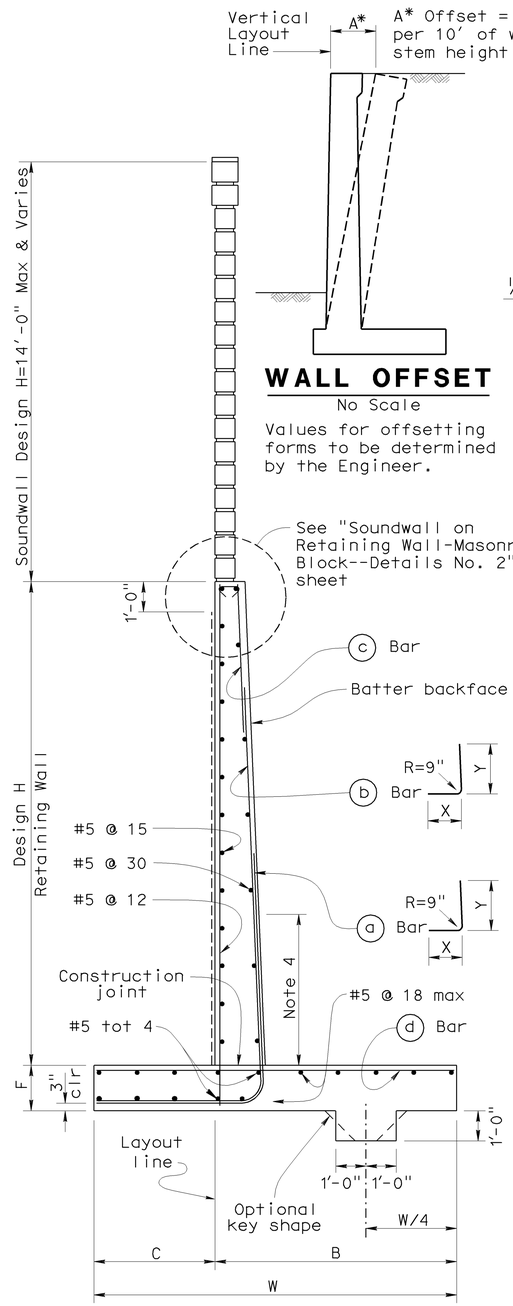

WALL OFFSET

No Scale

Values for offsetting forms to be determined by the Engineer.

SPREAD FOOTING SECTION (SOUNDWALL ON RETAINING WALL)

No Scale

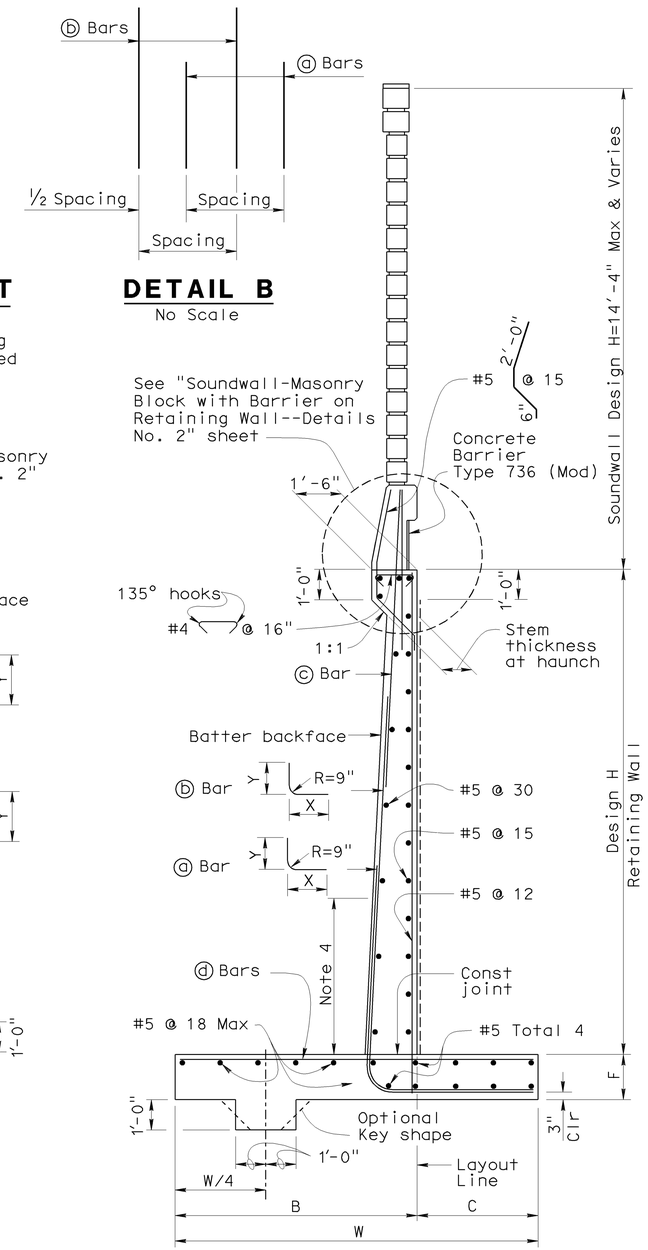

DETAIL B

No Scale

SPREAD FOOTING SECTION (SOUNDWALL WITH BARRIER ON RETAINING WALL)

No Scale

DESIGN DATA

DESIGN: Load Factor Design (LFD)

CONCRETE: Reinforced Concrete, f'c = 3600 psi
fy = 60,000 psi

LOADING CASE:
Case 1: Level ground with 240 psf surcharge and Soundwall
Case 2: 2:1Sloping ground and Soundwall

Seismic Load = 0.57 Dead Load
Wind Load = 33 psf

SEISMIC LOAD: SOIL
Kh = 0.3g
Kv = 0.0
Kae : Mononobe-Okabe Method

SOIL: Ø = 34° γ = 120 pcf
Equivalent fluid pressure:
= 36 pcf for determination of toe pressure
= 27 pcf for determination of heel pressure

EXTERNAL STABILITY:
Group 1 : D + E + SC
Group 2 : D + E + SC + W
Group 3 : D + PYM

INTERNAL STABILITY (LFD):
Group A : βD + 1.7E + 1.7SC
Group B : βD + 1.7E + 1.3W
Group C (stem) : 1.0D + 1.0E + 1.0EQD + 1.0EQE
Group C (footing) : D + PYM

Where : β = 1.0 or 1.3 whichever controls design
D = Dead Load
E = Lateral Earth Pressure
SC = Surcharge
W = Wind load
EQD = Seismic Dead Load
EQE = Seismic Lateral Earth Pressure
PYM = Probable Yield Moment (1.3 x Nominal Yield Moment of Stem)

Jon Hamaguchi
DESIGN OVERSIGHT Jon Hamaguchi
11-24-09
SIGN OFF DATE

	BY	CHECKED
DESIGN	M. Desai / J. Powell	M. Atiqullah / A. Issa
DETAILS	J. Powell	M. Atiqullah / A. Issa
QUANTITIES	Y. Chiu	B. Ho

PREPARED FOR THE STATE OF CALIFORNIA DEPARTMENT OF TRANSPORTATION

Ayman Salama
PROJECT ENGINEER

BRIDGE NO. 55E0091
POST MILE 19.36

RETAINING WALL NO. 628
RETAINING WALL DETAILS NO. 1

DESIGN DETAIL SHEET (ENGLISH) (REV. 2/25/05)

ORIGINAL SCALE IN INCHES FOR REDUCED PLANS 0 1 2 3

CU 12220
EA 0F0321

DISREGARD PRINTS BEARING EARLIER REVISION DATES
REVISION DATES (PRELIMINARY STAGE ONLY) 02/18/09 04/07/09 04/17/09 06/08/09

SHEET 4 OF 15

FILE => 55e0091-f-d01.dgn

USERNAME => rtrmikes1 DATE PLOTTED => 26-JAN-2010 TIME PLOTTED => 07:47

DIST	COUNTY	ROUTE	POST MILES TOTAL PROJECT	SHEET No	TOTAL SHEETS
12	Ora	57	18.4/20.9	726	856

Milind Desai 06/08/09
REGISTERED CIVIL ENGINEER DATE

1-25-10
PLANS APPROVAL DATE

REGISTERED PROFESSIONAL ENGINEER
MILIND R. DESAI
No. C51437
Exp. 6/30/10
CIVIL
STATE OF CALIFORNIA

The State of California or its officers or agents shall not be responsible for the accuracy or completeness of electronic copies of this plan sheet.

OCTA
550 S. MAIN STREET
ORANGE, CA 92863

CH2M HILL
6 HUTTON CENTRE DRIVE, SUITE 700
SANTA ANA, CA 92707

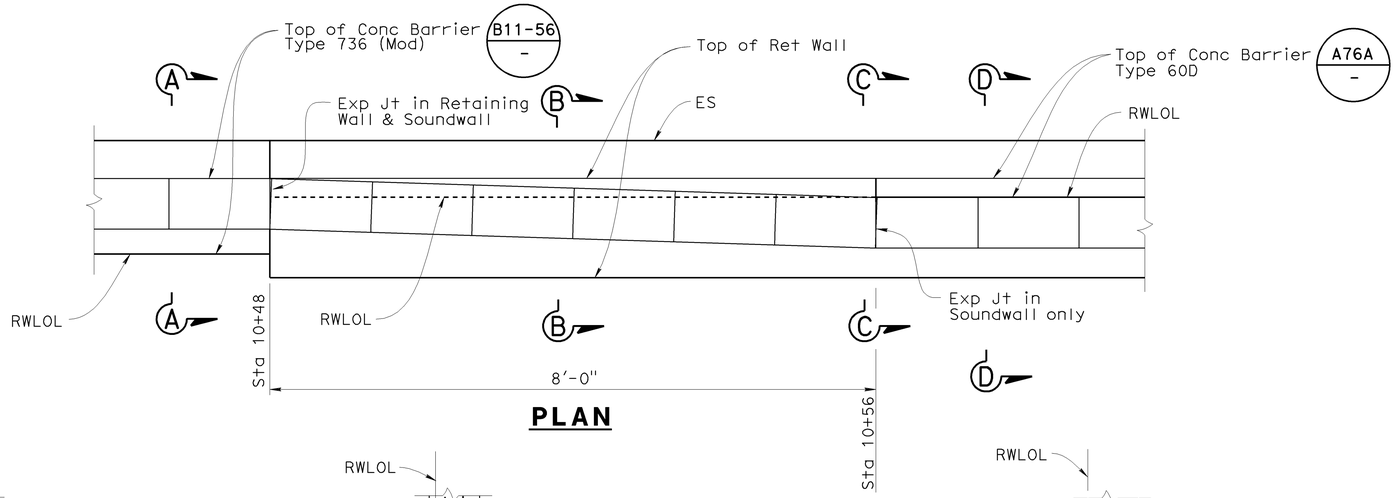

PLAN

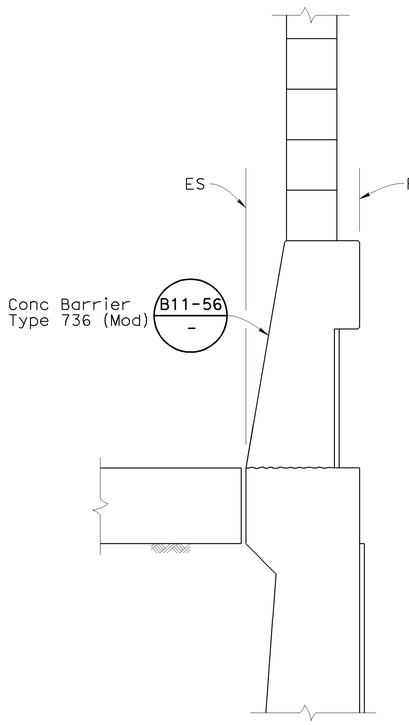

SECTION A-A

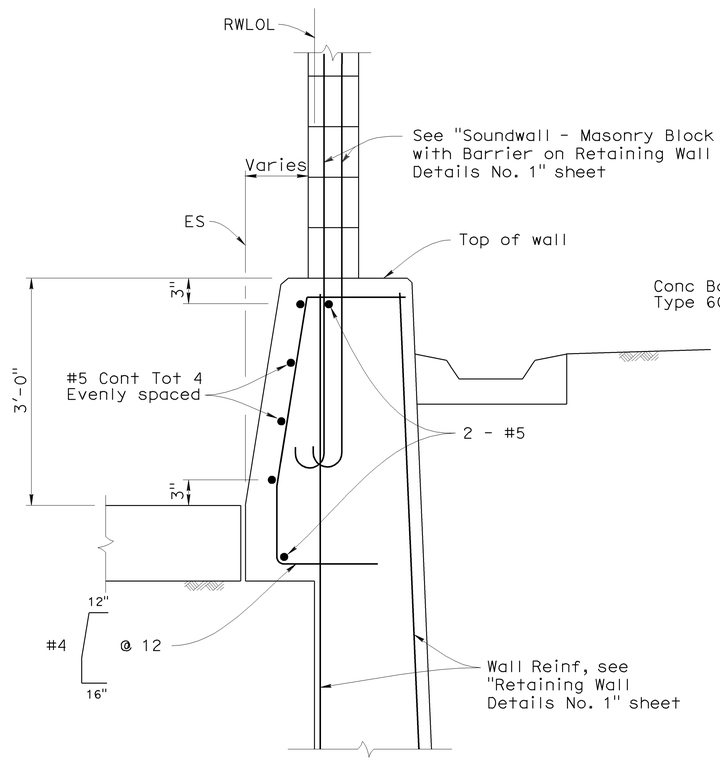

SECTION B-B

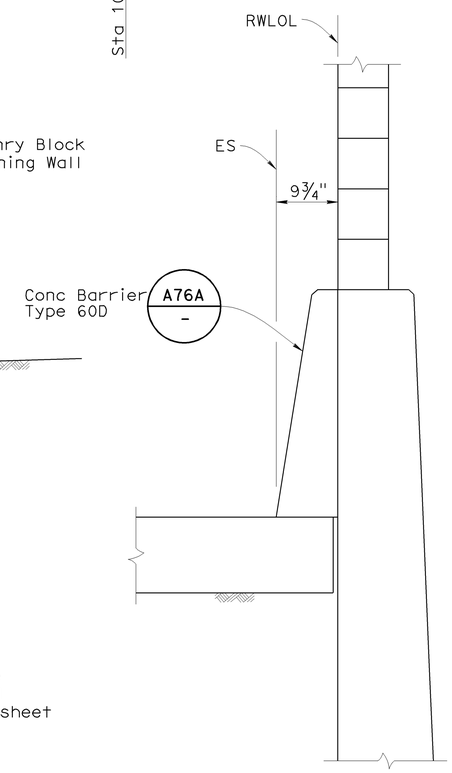

SECTION C-C

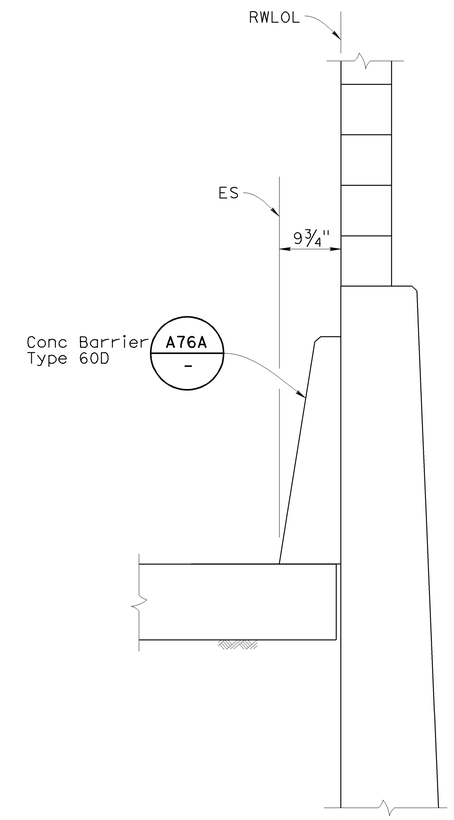

SECTION D-D

CONCRETE BARRIER TRANSITION DETAIL

1"=1'-0"

Jon Hamaguchi
DESIGN OVERSIGHT Jon Hamaguchi
11-24-09
SIGN OFF DATE

	BY	CHECKED
DESIGN	M. Desai / J. Powell	M. Atiqullah / A. Issa
DETAILS	J. Powell	M. Atiqullah / A. Issa
QUANTITIES	Y. Chiu	B. Ho

PREPARED FOR THE
STATE OF CALIFORNIA
DEPARTMENT OF TRANSPORTATION

Ayman Salama
PROJECT ENGINEER

BRIDGE NO. 55E0091
POST MILE 19.36

RETAINING WALL NO. 628
RETAINING WALL DETAILS NO. 2

DESIGN DETAIL SHEET (ENGLISH) (REV. 2/25/05)

ORIGINAL SCALE IN INCHES FOR REDUCED PLANS 0 1 2 3

CU 12220
EA 0F0321

DISREGARD PRINTS BEARING EARLIER REVISION DATES
REVISION DATES (PRELIMINARY STAGE ONLY) 02/18/09 04/07/09 04/17/09 06/08/09

SHEET 5 OF 15

FILE => 55e0091-f-d02.dgn

USERNAME => trmikest DATE PLOTTED => 26-JAN-2010 TIME PLOTTED => 07:47

DIST	COUNTY	ROUTE	POST MILES TOTAL PROJECT	SHEET No	TOTAL SHEETS
12	Ora	57	18.4/20.9	727	856

Milind Desai 06/08/09
REGISTERED ENGINEER - CIVIL DATE

1-25-10
PLANS APPROVAL DATE

REGISTERED PROFESSIONAL ENGINEER MILIND R. DESAI No. C51437 Exp. 6/30/10 CIVIL STATE OF CALIFORNIA

The State of California or its officers or agents shall not be responsible for the accuracy or completeness of electronic copies of this plan sheet.

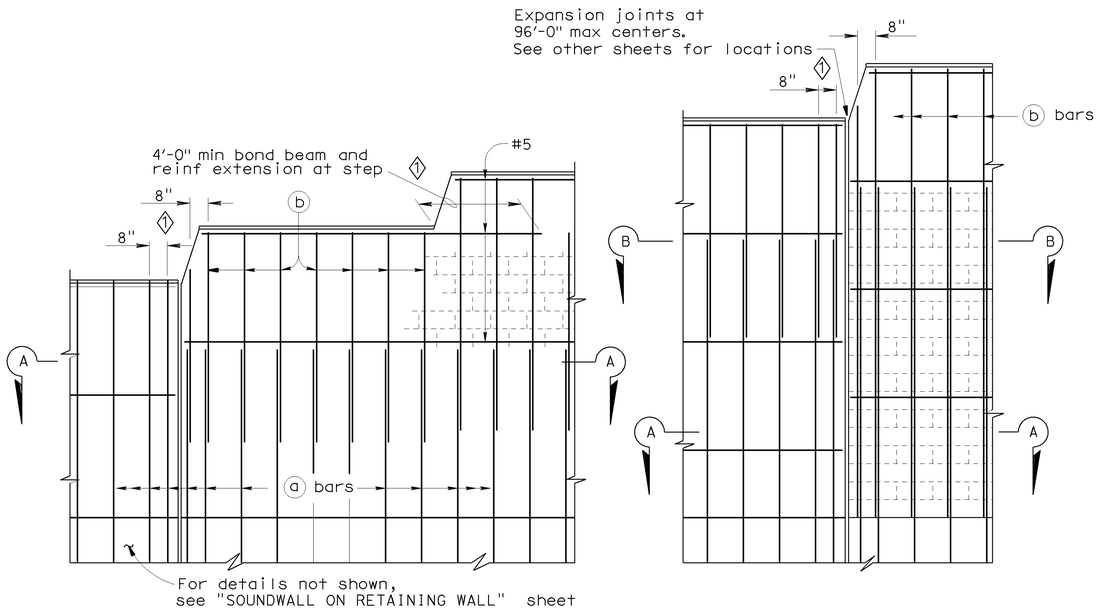

PART ELEVATIONS

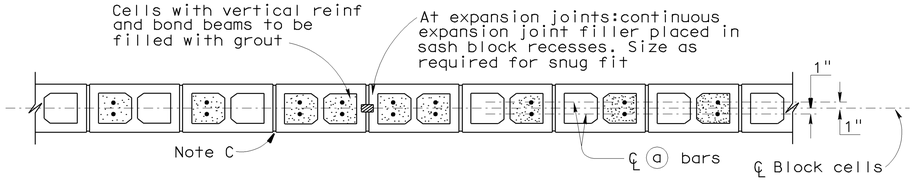

SECTION A-A

For details not shown,see other details

H=6'-0" THRU H=12'-0"

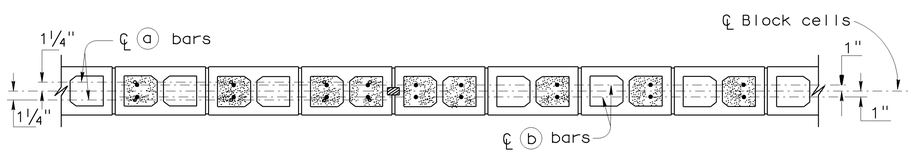

SECTION A-A

SECTION B-B

For details not shown,see other details

H=12'-0" THRU H=16'-0"

DESIGN NOTES

DESIGN

Uniform Building Code,1997 Edition and the Bridge Design Specifications.

DESIGN WIND LOAD

33 psf

DESIGN SEISMIC LOAD

0.57 Dead load

REINFORCED CONCRETE

f'c = 3.250 ksi
fy = 60 ksi

CONCRETE MASONRY

REGULAR STRENGTH	HIGH STRENGTH	
f'm = 1500 psi	f'm = 2000 psi	f'm = 2500 psi
f_b = 495 psi	f_b = 660 psi	f_b = 830 psi
fs = 24000 psi	fs = 24000 psi	fs = 24000 psi
n = 25.8	n = 19.3	n = 15.5

LOAD FACTORS AND LOAD COMBINATIONS

Working Stress Design (WSD) Percentage of unit stress

Group 1: D + E + SC 100%
Group 2: D + W + SC + E 100%
Group 3: D + 0.71 EQD + E 100%

Where:

D = Dead load
E = Lateral earth pressure
SC = Live load surcharge
W = Wind load
EQD = Seismic dead load

Load Factor Design (LFD)

Group A: βD +1.7 E + 1.7 SC
Group B: βD +1.7 E + 1.3 W
Group C: βD +1.3 E + 1.0 EQE
Group D: βD +1.3 E + 1.0 EQD
Group E: βD +1.1 E + 0.85 (EQE + EQD)

Where : β = 0.9 or 1.2, whichever controls in design
D = Dead load
E = Lateral earth pressure
SC = Live load surcharge
W = Wind load
EQD = Seismic dead load
EQE = Seismic earth load

STRENGTH REDUCTION FACTORS, Ø

Reinforced concrete:
For flexure ——— Ø=0.90
For shear ——— Ø=0.85

Concrete masonry:
For flexure ——— Ø=0.80
For shear ——— Ø=0.60

Foundations:
See "RETAINING WALL WITH SOUNDWALL" sheets

GENERAL NOTES

Note A: For type of block and joint finish, see "Soundwall on Retaining Wall-Masonry Block--Details No. 2" sheet.

Note B: When blocks are laid in stacked bond, ladder type, galvanized joint reinforcement shall be provided. A minimum of 2 - 9 gauge wires continuous at 4'-0" maximum to be used. Locate reinforcement in joints that are at the approximate midpoint between bond beams.

Note C: Horizontal joints shall be tooled concave or may be weathered.
Vertical joints shall be tooled concave or may be raked.

Note D: For intermediate wall heights that are between the "H's" given. Use the tabular information for the next higher "H".

Note E: Masonry strengths are listed in the "SOUNDWALL REINFORCEMENT TABLE".

SOUNDWALL REINFORCEMENT TABLE

Maximum H	a bars @ 406 max	b bars @ 406 max	"y"	f'm (psi)	Compressive Strength of CMU (psi)	Maximum H
6'-0"	#4	———	———	1500	1.9	6'-0"
8'-0"	#4	———	———	1500	1900	8'-0"
10'-0"	#4	———	———	1500	1900	10'-0"
12'-0"	#5	#4	6'-0"	2000	2800	12'-0"
14'-0"	#6	#4	8'-0"	2500	3750	14'-0"
16'-0"	#6	#4	10'-0"	2500	3750	16'-0"

SPECIAL DETAILS

RETAINING WALL NO. 628

SOUNDWALL ON RETAINING WALL-MASONRY BLOCK

DETAILS NO. 1

STANDARD DRAWING

FILE NO. xs15-120-1e

APPROVED BY T SATTER
RESPONSIBLE TECHNICAL SPECIALIST
APPROVAL DATE 4-15-08

RELEASED BY ROBERTO LACALLE
RESPONSIBLE OFFICE CHIEF
RELEASE DATE REVISED

1 Revised Step

STATE OF CALIFORNIA
DEPARTMENT OF TRANSPORTATION

DIVISION OF ENGINEERING SERVICES

BRIDGE NO. 55E0091
POST MILE 19.36

CU 12220
EA 0F0321

DISREGARD PRINTS BEARING EARLIER REVISION DATES

REVISION DATES (PRELIMINARY STAGE ONLY) 02/18/09 04/07/09 04/17/09 06/08/09

SHEET 6 OF 15

DS OSD 2147A (ENGLISH STANDARD DRAWING "XS" BORDER REV. 01/11/08)

ORIGINAL SCALE IN INCHES FOR REDUCED PLANS 0 1 2 3

USERNAME => trmikesi

55e0091-g-rwdt01.dgn

DATE PLOTTED => 26-JAN-2010 TIME PLOTTED => 07:47

DIST	COUNTY	ROUTE	POST MILES TOTAL PROJECT	SHEET No	TOTAL SHEETS
12	Ora	57	18.4/20.9	728	856

Milind Desai 06/08/09
REGISTERED ENGINEER - CIVIL DATE

1-25-10
PLANS APPROVAL DATE

REGISTERED PROFESSIONAL ENGINEER
MILIND R. DESAI
No. C51437
Exp. 6/30/10
CIVIL
STATE OF CALIFORNIA

The State of California or its officers or agents shall not be responsible for the accuracy or completeness of electronic copies of this plan sheet.

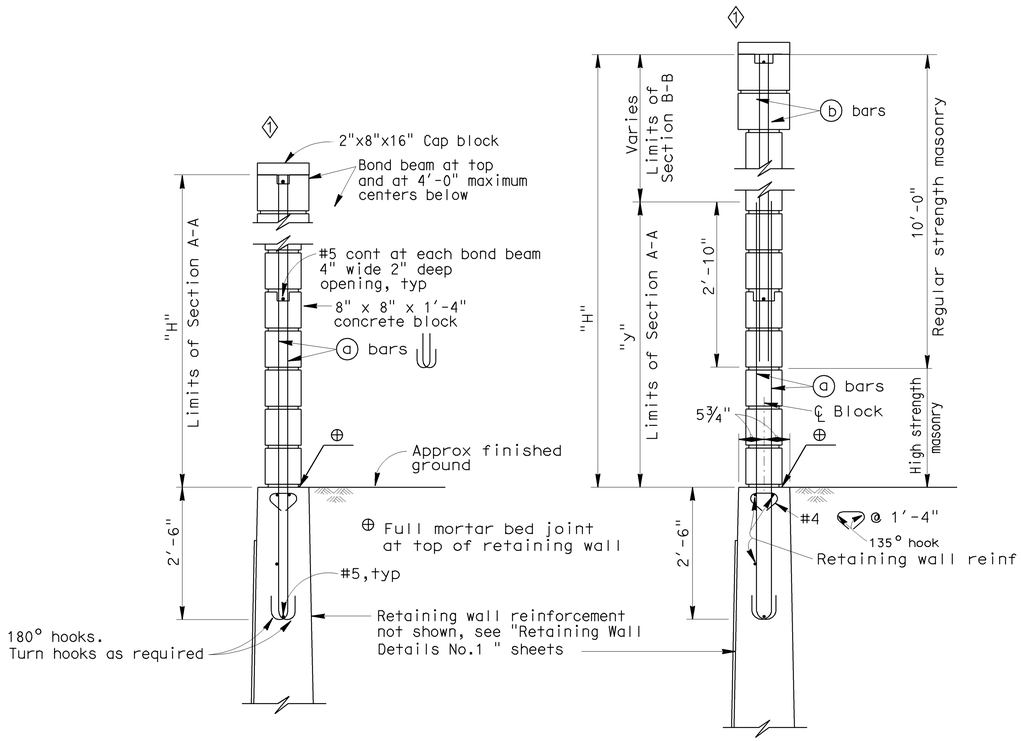

H=6'-0" THRU H=10'-0"

For details not shown, see H=12'-0" thru H=16'-0"

H=12'-0" THRU H=16'-0"

For details not shown, see H=6'-0" thru H=10'-0"

TYPICAL SECTIONS

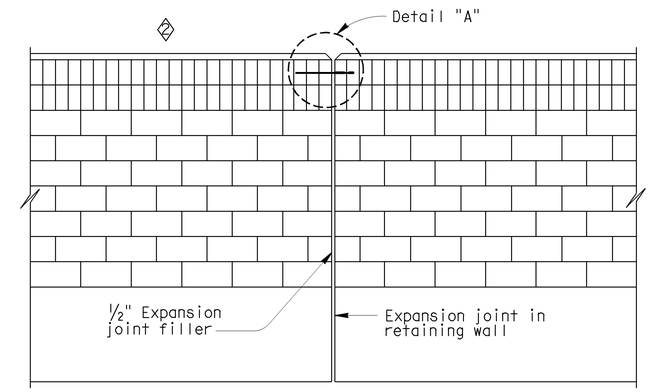

ALIGNMENT KEY DETAIL

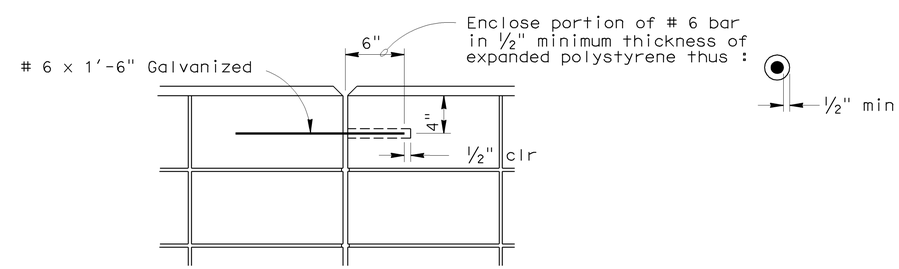

DETAIL A 3

SPECIAL DETAILS

RETAINING WALL NO. 628

SOUNDWALL ON RETAINING WALL-MASONRY BLOCK

DETAILS NO. 2

STANDARD DRAWING

FILE NO. xs15-120-2e

APPROVED BY T SATTER
RESPONSIBLE TECHNICAL SPECIALIST
APPROVAL DATE 4-15-08

RELEASED BY ROBERTO LACALLE
RESPONSIBLE OFFICE CHIEF
RELEASE DATE REVISED

1 Revised cap blocks
2 Revised Alignment Key Detail

STATE OF CALIFORNIA
DEPARTMENT OF TRANSPORTATION

DIVISION OF ENGINEERING SERVICES

BRIDGE NO. 55E0091
POST MILE 19.36

DS OSD 2147A (ENGLISH STANDARD DRAWING "XS" BORDER REV. 01/11/08)

ORIGINAL SCALE IN INCHES FOR REDUCED PLANS 0 1 2 3

CU 12220
EA 0F0321

DISREGARD PRINTS BEARING EARLIER REVISION DATES

REVISION DATES (PRELIMINARY STAGE ONLY) 02/18/09 04/02/09 04/17/09 06/08/09

SHEET 7 OF 15

USERNAME => trmikesl

55e0091-g-rwdt02.dgn

DATE PLOTTED => 26-JAN-2010 TIME PLOTTED => 07:47

DIST	COUNTY	ROUTE	POST MILES TOTAL PROJECT	SHEET No	TOTAL SHEETS
12	Ora	57	18.4/20.9	729	856

Milind Desai 06/08/09
REGISTERED ENGINEER - CIVIL DATE

1-25-10
PLANS APPROVAL DATE

REGISTERED PROFESSIONAL ENGINEER MILIND R. DESAI No. C51437 Exp. 6/30/10 CIVIL STATE OF CALIFORNIA

The State of California or its officers or agents shall not be responsible for the accuracy or completeness of electronic copies of this plan sheet.

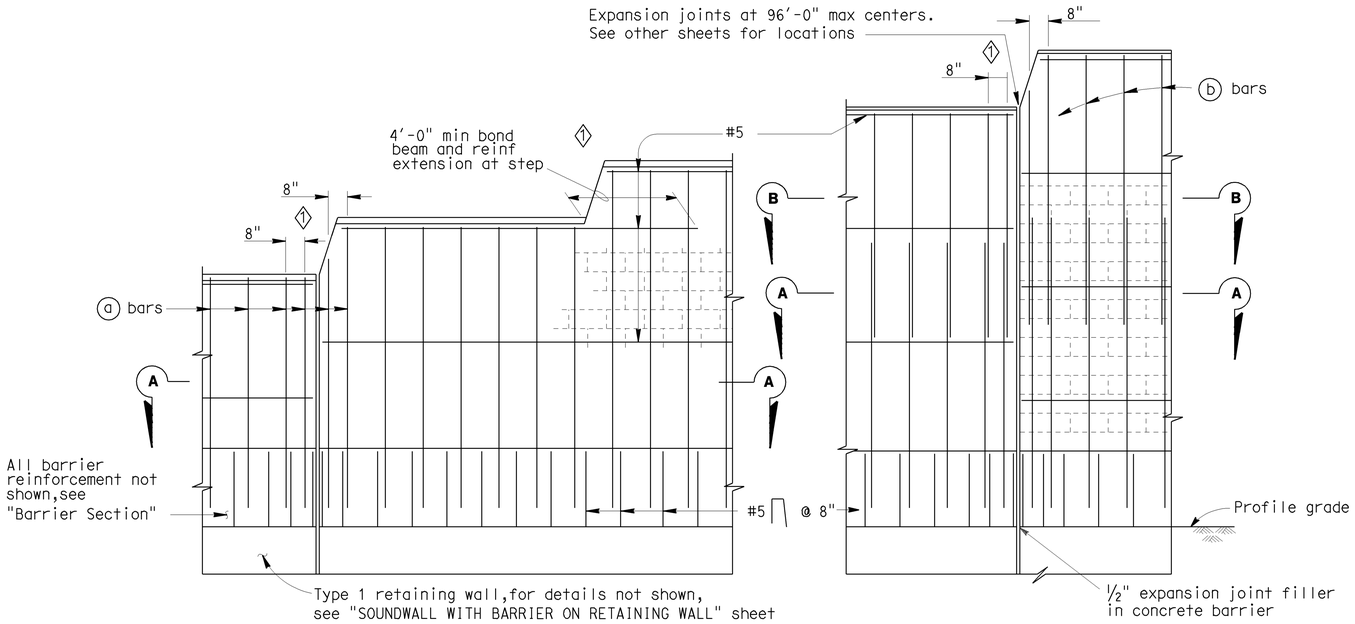

PART ELEVATIONS

SOUNDWALL REINFORCEMENT TABLE						
Maximum H	(a) bars @ 1'-4" max	(b) bars @ 1'-4" max	"y"	f'm (KSI)	Compressive Strength of CMU (KSI)	Maximum H
6'-4"	# 4	———	———	1.5	1.9	6'-4"
8'-4"	# 4	———	———	1.5	1.9	8'-4"
10'-4"	# 4	———	———	1.5	1.9	10'-4"
12'-4"	# 5	# 4	5'-0"	1.5	1.9	12'-4"
14'-4"	# 6	# 4	7'-0"	1.5	1.9	14'-4"
16'-4"	# 6	# 4	9'-0"	2.5	3.7	16'-4"

Note I : For details not shown, see "SOUNDWALL WITH BARRIER ON RETAINING WALL - MASONRY BLOCK -- DETAILS NO.2" sheet.

Note II : Slope ground at traffic side of barrier to drain. Maximum slope ±10%.

Note III : See "SOUNDWALL MASONRY BLOCK - MISCELLANEOUS DETAILS" sheet for other details.

GENERAL NOTES

Note A: For type of block and joint finish, see "Soundwall on Retaining Wall - Masonry Block -- Details No. 2" sheet.

Note B: When blocks are laid in stacked bond, ladder type, galvanized joint reinforcement shall be provided. A minimum of 0.07"-0.14" wire continuous at 4'-0" maximum to be used. Locate reinforcement in joints that are at the approximate midpoint between bond beams.

Note C: Horizontal joints shall be tooled concave or may be weathered.
Vertical joints shall be tooled concave or may be raked.

Note D: For intermediate wall heights that are between the "H's" given. Use the tabular information for the next higher "H".

Note E: Masonry strengths are listed in "SOUNDWALL REINFORCEMENT TABLE".

Note F: Class 2 concrete to be used for the barrier.

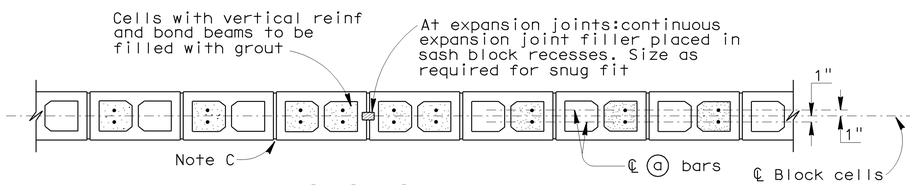

SECTION A-A

For details not shown, see other details

H=6'-4" THRU H=10'-4"

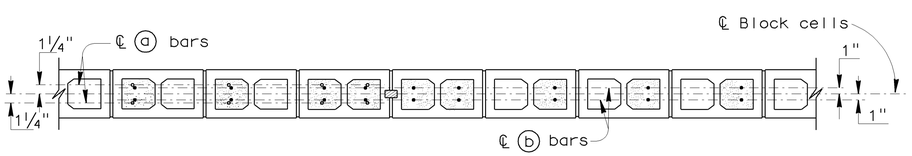

SECTION A-A

SECTION B-B

For details not shown, see other details

H=12'-4" THRU H=16'-4"

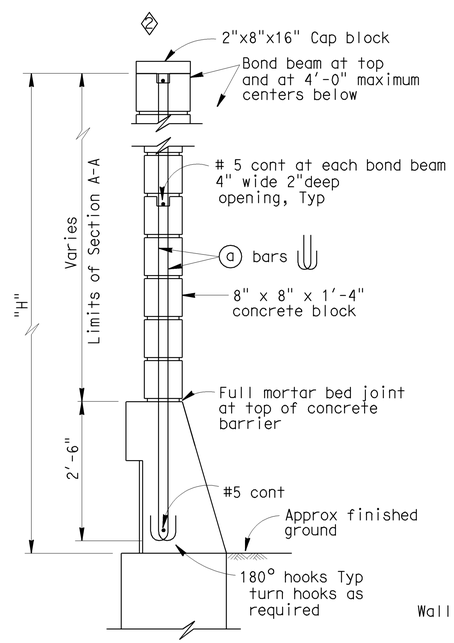

H=6'-4" THRU H=10'-4"

For details not shown, see H=12'-4" thru H=16'-4"

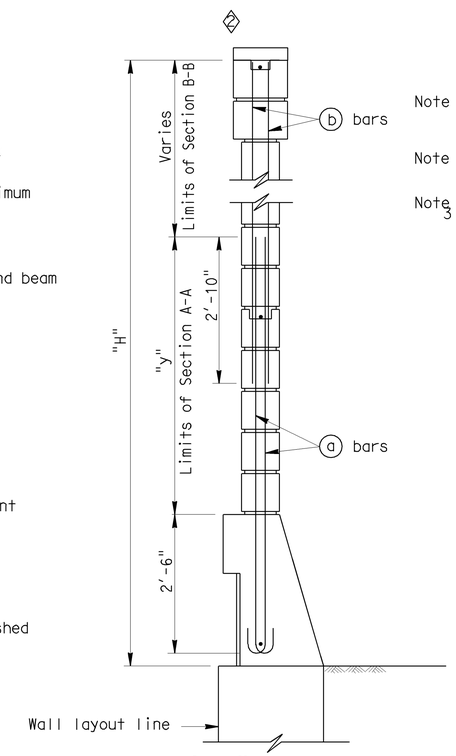

H=12'-4" THRU H=16'-4"

For details not shown, see H=6'-4" thru H=10'-4"

TYPICAL SECTIONS

SPECIAL DETAILS

RETAINING WALL NO. 628

SOUNDWALL - MASONRY BLOCK WITH BARRIER ON RETAINING WALL

DETAILS NO. 1

STANDARD DRAWING

FILE NO. xs15-130-1e

APPROVED BY T SATTER — RESPONSIBLE TECHNICAL SPECIALIST
APPROVAL DATE 9-2-08

RELEASED BY ROBERTO LACALLE — RESPONSIBLE OFFICE CHIEF
RELEASE DATE REVISED

1 Revised Step
2 Revised cap blocks

STATE OF CALIFORNIA
DEPARTMENT OF TRANSPORTATION

DIVISION OF ENGINEERING SERVICES

BRIDGE NO. 55E0091
POST MILE 19.36

CU 12220
EA 0F0321

DISREGARD PRINTS BEARING EARLIER REVISION DATES

REVISION DATES (PRELIMINARY STAGE ONLY) 02/18/09 04/07/09 04/17/09 06/08/09

SHEET 8 OF 15

DS OSD 2147A (ENGLISH STANDARD DRAWING "XS" BORDER REV. 01/11/08)

ORIGINAL SCALE IN INCHES FOR REDUCED PLANS 0 1 2 3

USERNAME => trmikesl

55e0091-g-swdt01.dgn

DATE PLOTTED => 26-JAN-2010 TIME PLOTTED => 07:47

DIST	COUNTY	ROUTE	POST MILES TOTAL PROJECT	SHEET No	TOTAL SHEETS
12	Ora	57	18.4/20.9	730	856

Milind Desai 06/08/09
REGISTERED ENGINEER - CIVIL DATE

1-25-10
PLANS APPROVAL DATE

REGISTERED PROFESSIONAL ENGINEER MILIND R. DESAI No. C51437 Exp. 6/30/10 CIVIL STATE OF CALIFORNIA

The State of California or its officers or agents shall not be responsible for the accuracy or completeness of electronic copies of this plan sheet.

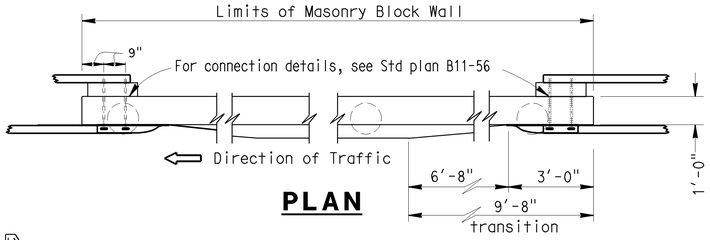

PLAN

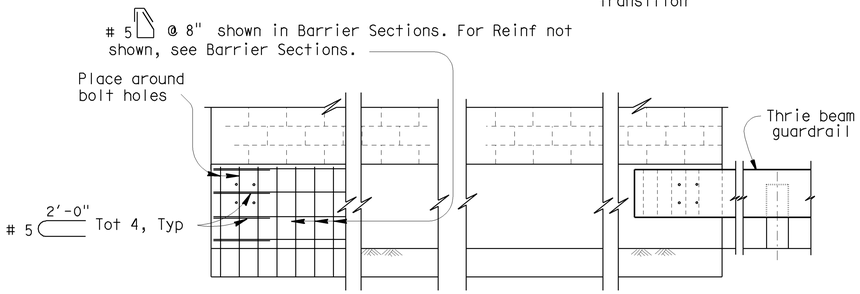

ELEVATION

METAL BEAM GUARDRAIL ANCHORAGE

For details not shown, see Std plan B11-56.

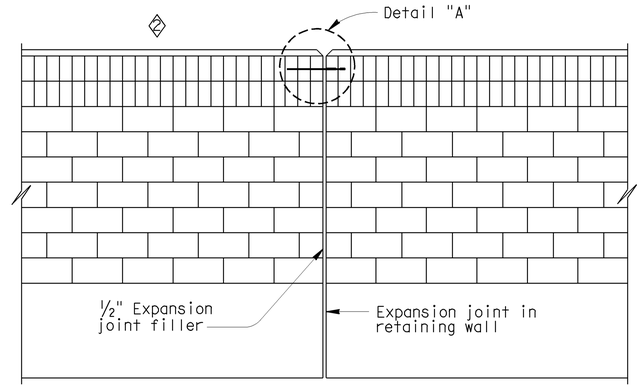

ALIGNMENT KEY DETAIL

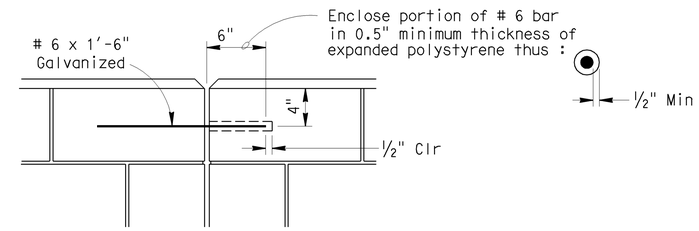

DETAIL A

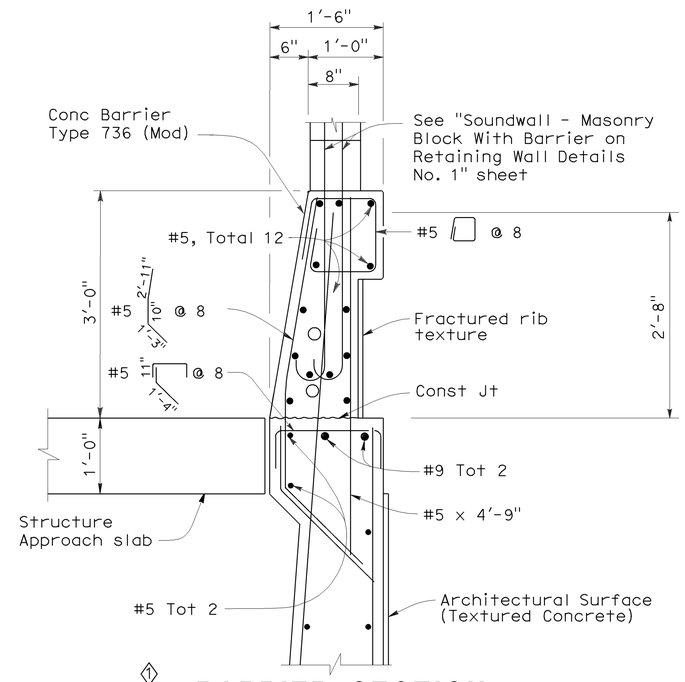

BARRIER SECTION

NOTES:

I : For details not shown,see "Retaining Wall Details No. 1 & No. 2" sheet.

II : Slope ground at traffic side of barrier to drain. Maximum slope ±10%. See Standard Plan B11-56, Note D.

DESIGN NOTES

DESIGN

Uniform Building Code,1997 Edition and the Bridge Design Specifications.

DESIGN WIND LOAD

33 PSF

DESIGN SEISMIC LOAD

0.57 Dead load

REINFORCED CONCRETE

f'c = 3250 PSI
fy = 60 KSI

CONCRETE MASONRY

REGULAR STRENGTH	HIGH STRENGTH	
f'm = 1500 PSI	f'm = 2000 PSI	f'm = 2500 PSI
f_b = 1500 PSI	f_b = 660 PSI	f_b = 830 PSI
fs = 24.0 KSI	fs = 24.0 KSI	fs = 24000 PSI
n = 25.8	n = 19.3	n = 15.5

LOAD FACTORS AND LOAD COMBINATIONS

Working Stress Design (WSD) Percentage of unit stress

Group 1: D + E + SC	100%
Group 2: D + W + SC + E	100%
Group 3: D + 0.71 EQD + E	100%

Where:

D = Dead load
E = Lateral earth pressure
SC = Live load surcharge
W = Wind load
EQD = Seismic dead load

Load Factor Design (LFD)

Group A: βD +1.7 E + 1.7 SC
Group B: βD +1.7 E + 1.3 W
Group C: βD +1.3 E + 1.0 EQE
Group D: βD +1.3 E + 1.0 EQD
Group E: βD +1.1 E + 0.85 (EQE + EQD)

Where : β = 0.9 or 1.2, whichever controls in design
D = Dead load
E = Lateral earth pressure
SC = Live load surcharge
W = Wind load
EQD = Seismic dead load
EQE = Seismic earth load

STRENGTH REDUCTION FACTORS, Ø

Reinforced concrete:
For flexure ---------- Ø=0.90
For shear ---------- Ø=0.85

Concrete masonry:
For flexure ---------- Ø=0.80
For shear ---------- Ø=0.60

Foundations :

See "RETAINING WALL WITH SOUNDWALL" sheets.

SPECIAL DETAILS

RETAINING WALL NO. 628

SOUNDWALL - MASONRY BLOCK WITH BARRIER ON RETAINING WALL

DETAILS NO. 2

STANDARD DRAWING

FILE NO. xs15-130-2e

APPROVED BY T SATTER
RESPONSIBLE TECHNICAL SPECIALIST
APPROVAL DATE 4-15-08

RELEASED BY ROBERTO LACALLE
RESPONSIBLE OFFICE CHIEF
RELEASE DATE REVISED

1 Revised Barrier Section
2 Revised Alignment Key Detail
3 Delete Clearance Detail
4 Revised Note

STATE OF CALIFORNIA
DEPARTMENT OF TRANSPORTATION

DIVISION OF ENGINEERING SERVICES

BRIDGE NO. 55E0091
POST MILE 19.36

CU 12220
EA 0F0321

DISREGARD PRINTS BEARING EARLIER REVISION DATES 02/18/09 04/07/09 04/17/09 06/08/09

SHEET 9 OF 15

DS OSD 2147A (ENGLISH STANDARD DRAWING "XS" BORDER REV. 01/11/08)

ORIGINAL SCALE IN INCHES FOR REDUCED PLANS 0 1 2 3

USERNAME => trmikesi

55e0091-g-swdt02.dgn

DATE PLOTTED => 26-JAN-2010 TIME PLOTTED => 00:22:47

DIST	COUNTY	ROUTE	POST MILES TOTAL PROJECT	SHEET No	TOTAL SHEETS
12	Ora	57	18.4/20.9	731	856

Milind Desai 06/08/09
REGISTERED CIVIL ENGINEER DATE

1-25-10
PLANS APPROVAL DATE

REGISTERED PROFESSIONAL ENGINEER
MILIND R. DESAI
No. C51437
Exp. 6/30/10
CIVIL
STATE OF CALIFORNIA

The State of California or its officers or agents shall not be responsible for the accuracy or completeness of electronic copies of this plan sheet.

OCTA
550 S. MAIN STREET
ORANGE, CA 92863

CH2M HILL
6 HUTTON CENTRE DRIVE, SUITE 700
SANTA ANA, CA 92707

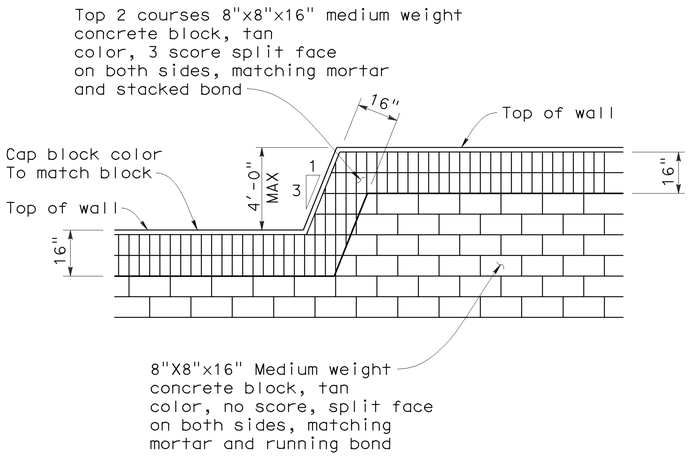

TRANSITION ELEVATION

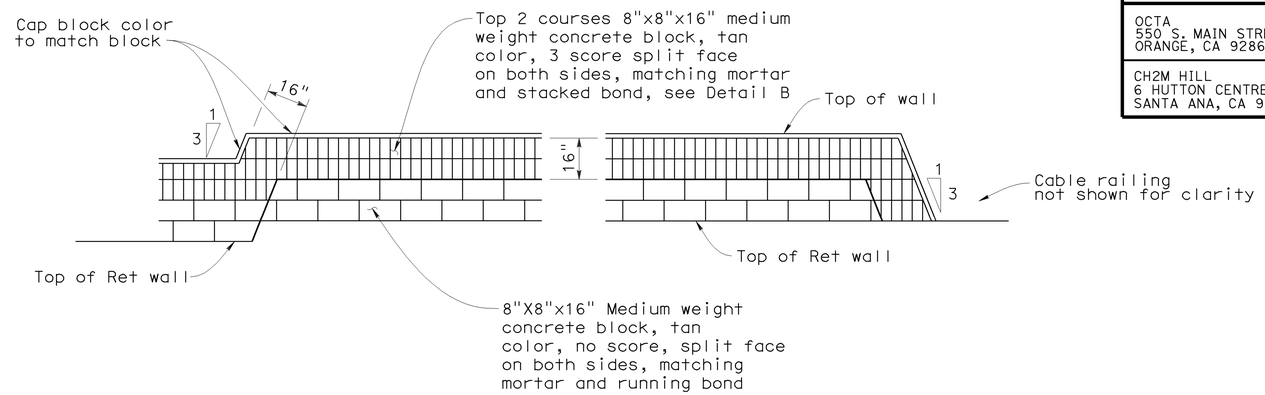

END WALL ELEVATION

CONCRETE BLOCK TYPE, COLOR AND PLACEMENT

No Scale

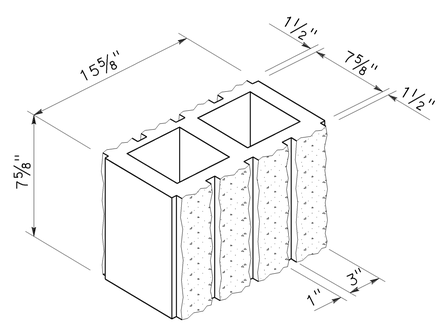

DETAIL B

No Scale

8" Wide 3-score split face both sides

Jon Hamaguchi
DESIGN OVERSIGHT Jon Hamaguchi
11-24-09
SIGN OFF DATE

	BY	CHECKED
DESIGN	M. Desai / J. Powell	M. Atiqullah / A. Issa
DETAILS	J. Powell	M. Atiqullah / A. Issa
QUANTITIES	Y. Chiu	B. Ho

PREPARED FOR THE
STATE OF CALIFORNIA
DEPARTMENT OF TRANSPORTATION

Ayman Salama
PROJECT ENGINEER

BRIDGE NO. 55E0091
POST MILE 19.36

RETAINING WALL NO. 628

SOUNDWALL MASONRY BLOCK MISCELLANEOUS DETAILS

DESIGN DETAIL SHEET (ENGLISH) (REV. 2/25/05)

ORIGINAL SCALE IN INCHES FOR REDUCED PLANS 0 1 2 3

CU 12220
EA 0F0321

DISREGARD PRINTS BEARING EARLIER REVISION DATES
REVISION DATES (PRELIMINARY STAGE ONLY) 02/18/09 04/07/09 04/17/09 06/08/09

SHEET 10 OF 15

FILE => 55e0091-u-miscdt01.dgn

USERNAME => ttmikesi DATE PLOTTED => 26-JAN-2010 TIME PLOTTED => 07:47

DIST	COUNTY	ROUTE	POST MILES TOTAL PROJECT	SHEET No	TOTAL SHEETS
12	Ora	57	18.4/20.9	732	856

REGISTERED CIVIL ENGINEER — DATE 06/08/09

1-25-10
PLANS APPROVAL DATE

REGISTERED PROFESSIONAL ENGINEER — MOHAMMED ATIQULLAH — No. C47027 — Exp. 12/31/09 — CIVIL — STATE OF CALIFORNIA

The State of California or its officers or agents shall not be responsible for the accuracy or completeness of electronic copies of this plan sheet.

OCTA
550 S. MAIN STREET
ORANGE, CA 92863

CH2M HILL
6 HUTTON CENTRE DRIVE, SUITE 700
SANTA ANA, CA 92707

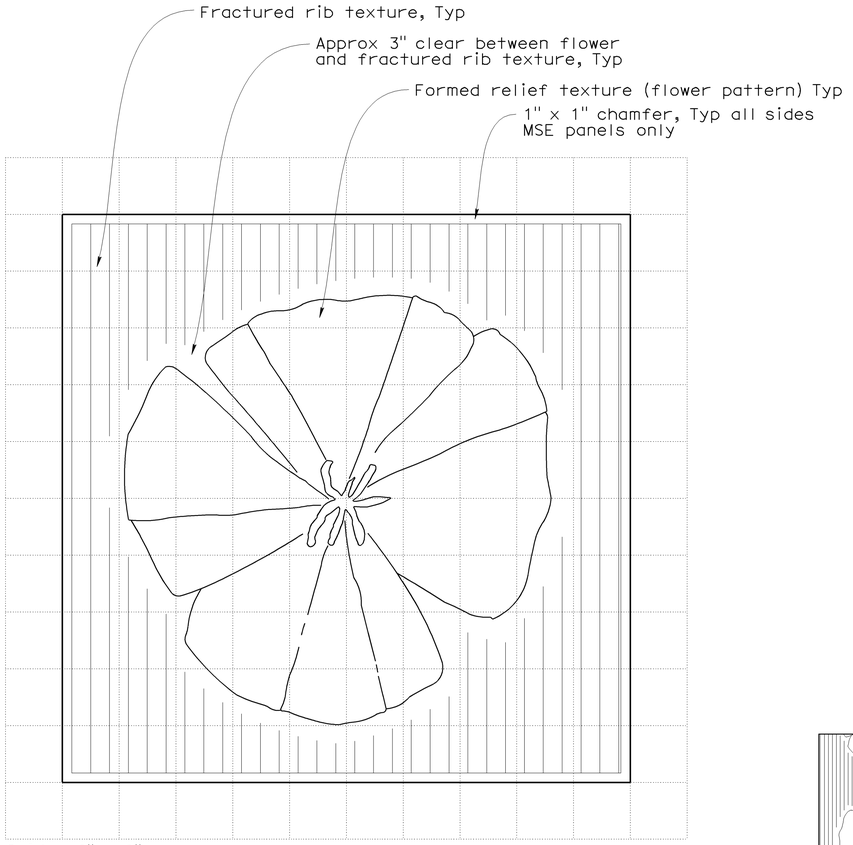

ARCHITECTURAL SURFACE (TEXTURED CONCRETE) FOR MSE PANEL

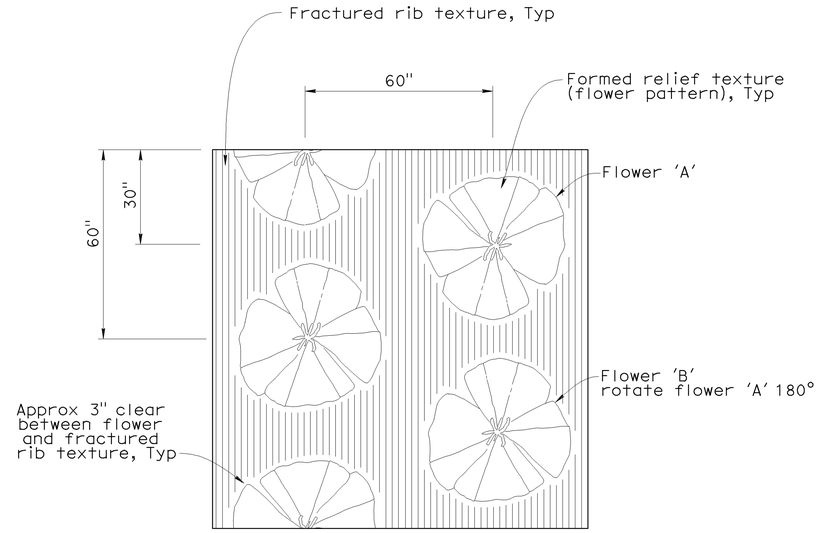

ARCHITECTURAL SURFACE (TEXTURED CONCRETE) PATTERN

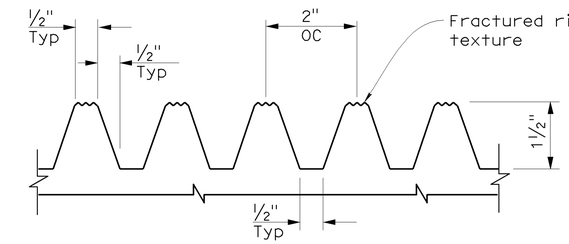

FRACTURED RIB TEXTURE DETAIL

(Elastomer Formliner)

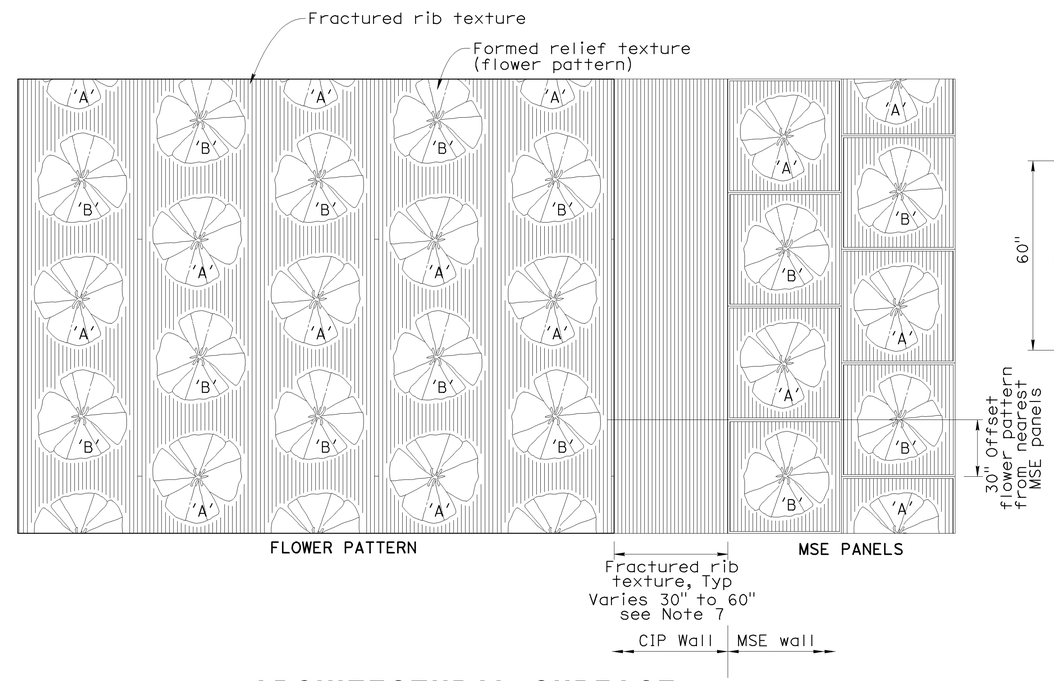

ARCHITECTURAL SURFACE (TEXTURED CONCRETE) ELEVATION

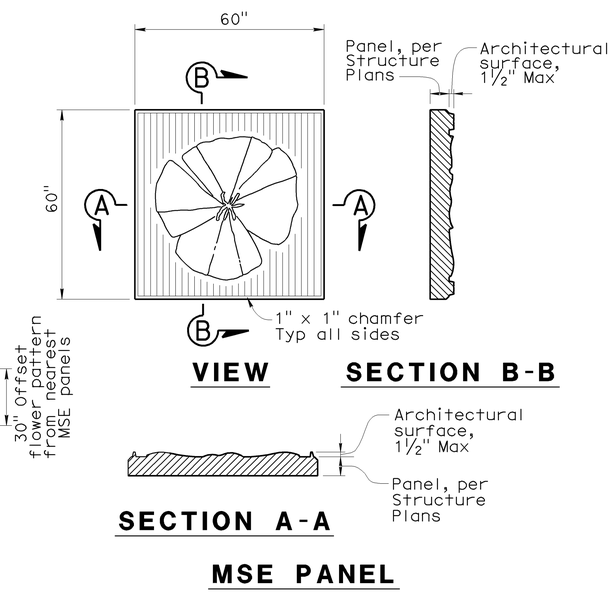

MSE PANEL

No scale

NOTES:

1. Identical flower images, scale and spacing shall be used for flower pattern and MSE wall panels.
2. Within a vertical column, flower images shall alternate between flowers 'A' and 'B'. Vertical columns shall be offset 30" from adjacent columns.
3. Where placed on walls bounded by concrete barriers, finished grade or top of wall, flower pattern shall be continued without concern for partial flower images, except as noted.
4. Refer to structural details for width of smooth band to be applied at edges of structures.
5. Where the flower pattern will be used adjacent to a horizontal limit such as a bridge abutment, adjoining MSE wall or overhead sign structure support, flower pattern shall be discontinued from a section not less than 30" and not greater than 60" wide from the horizontal limit to avoid truncation of flower images. Fractured rib texture shall be inserted in the resulting gap to create a continuous buffer between pattern areas.
6. The nearest column of flower images (flower pattern) shall be offset vertically 30" from the panels.
7. Vary fractured rib texture width (30" to 60") to provide complete flower pattern on cip wall side.

DESIGN OVERSIGHT — Jon Hamaguchi
11-24-09
SIGN OFF DATE

	BY	CHECKED
DESIGN	M. Atiqullah	E. Cutler
DETAILS	M. Atiqullah	E. Cutler
QUANTITIES	Y. Chiu	B. Ho

PREPARED FOR THE STATE OF CALIFORNIA DEPARTMENT OF TRANSPORTATION

Ayman Salama
PROJECT ENGINEER

BRIDGE NO. 55E0091
POST MILE 19.36

RETAINING WALL NO. 628
ARCHITECTURAL TREATMENT DETAILS

DESIGN DETAIL SHEET (ENGLISH) (REV. 2/25/05)

ORIGINAL SCALE IN INCHES FOR REDUCED PLANS 0 1 2 3

CU 12220
EA 0F0321

DISREGARD PRINTS BEARING EARLIER REVISION DATES — REVISION DATES (PRELIMINARY STAGE ONLY) 06/08/09

SHEET 11 OF 15

FILE => 55e0091-t-arcdt01.dgn

USERNAME => trmikesl DATE PLOTTED => 26-JAN-2010 TIME PLOTTED => 07:48

DIST	COUNTY	ROUTE	POST MILES TOTAL PROJECT	SHEET No	TOTAL SHEETS
12	Ora	57	18.4/20.9	733	856

Hisham Nofal 06/08/09
GEOTECHNICAL PROFESSIONAL DATE

1-25-10
PLANS APPROVAL DATE

REGISTERED PROFESSIONAL ENGINEER HISHAM M. NOFAL No. 2765 Exp. 09/30/09 GEOTECHNICAL STATE OF CALIFORNIA

The State of California or its officers or agents shall not be responsible for the accuracy or completeness of electronic copies of this plan sheet.

OCTA
550 S. MAIN STREET
ORANGE, CA 92863

CH2M HILL
6 HUTTON CENTRE DRIVE, SUITE 700
SANTA ANA, CA 92707

BENCHMARK:

Horizontal coordinates are CCS NAD-83, Zone 6.
vertical control based on North American Vertical Datum 1988.
Pt 1049: N2276409.426, E6066857.705, Elev 348.344

SAMPLER TYPES:

California modified ring sampler
standard penetration test sampler

HAMMER TYPE:

Automatic hammer

CORRECTION FACTOR:

To convert from California modified ring sampler blow count to equivalent standard penetration test sampler blow count, for granular and cohesive soil, multiply by 0.67.

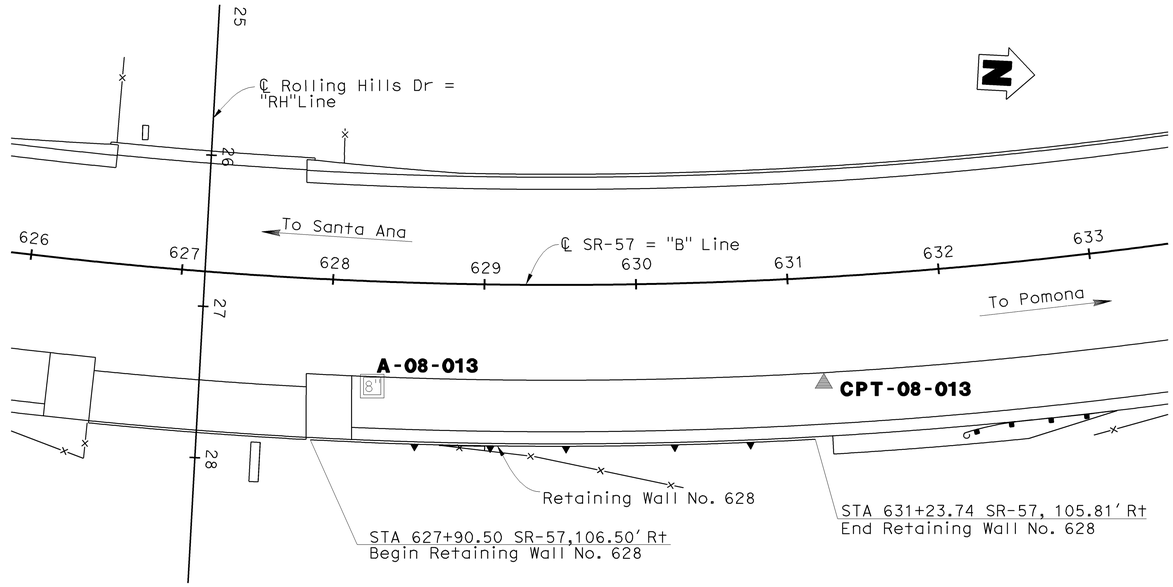

PLAN
1"=50'

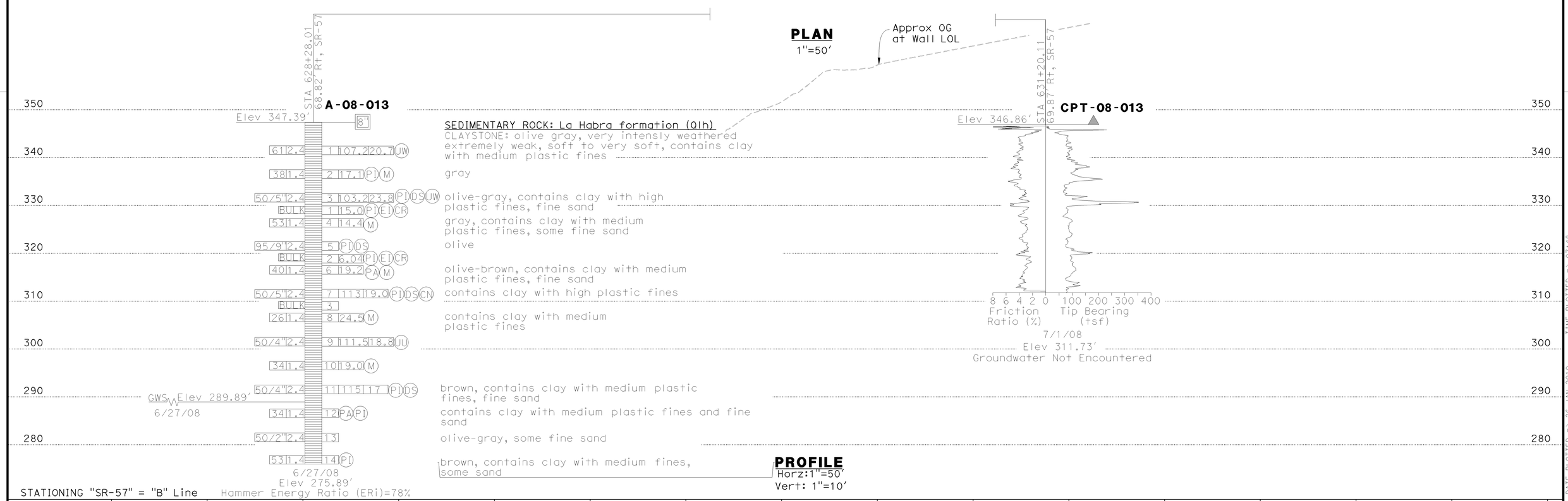

PROFILE
Horz:1"=50'
Vert: 1"=10'

Jon Hamaguchi DESIGN OVERSIGHT	DRAWN BY	K. Reyes	R. Bethapudi FIELD INVESTIGATION BY:
11-24-09 SIGN OFF DATE	CHECKED BY	H. Nofal	DATE

PREPARED FOR THE STATE OF CALIFORNIA DEPARTMENT OF TRANSPORTATION

Ayman Salama
PROJECT ENGINEER

BRIDGE NO. 55E0091
POST MILES 19.36

RETAINING WALL No. 628

LOG OF TEST BORINGS SHEET 1 OF 4

ORIGINAL SCALE IN INCHES FOR REDUCED PLANS 0 1 2 3

CU 12220
EA 0F0321

DISREGARD PRINTS BEARING EARLIER REVISION DATES → 02/18/09 04/07/09 04/27/09 06/08/09

REVISION DATES (PRELIMINARY STAGE ONLY)

SHEET 12 OF 15

FILE => 55e0091-z-1tb01.dgn

USERNAME => trmikesl DATE PLOTTED => 26-JAN-2010 TIME PLOTTED => 07:48

REFERENCE: CALTRANS SOIL & ROCK LOGGING, CLASSIFICATION, AND PRESENTATION MANUAL (JUNE 2007)

DIST	COUNTY	ROUTE	POST MILES TOTAL PROJECT	SHEET No	TOTAL SHEETS
12	Ora	57	18.4/20.9	734	856

Hisham Nofal 06/08/09
GEOTECHNICAL PROFESSIONAL DATE

1-25-10
PLANS APPROVAL DATE

REGISTERED PROFESSIONAL ENGINEER HISHAM M. NOFAL No. 2765 Exp. 09/30/09 GEOTECHNICAL STATE OF CALIFORNIA

The State of California or its officers or agents shall not be responsible for the accuracy or completeness of electronic copies of this plan sheet.

OCTA
550 S. MAIN STREET
ORANGE, CA 92863

CH2M HILL
6 HUTTON CENTRE DRIVE, SUITE 700
SANTA ANA, CA 92707

GROUP SYMBOLS AND NAMES

Graphic/Symbol	Group Names	Graphic/Symbol	Group Names
GW	Well-graded GRAVEL Well-graded GRAVEL with SAND	CL	Lean CLAY Lean CLAY with SAND Lean CLAY with GRAVEL SANDY lean CLAY SANDY lean CLAY with GRAVEL GRAVELLY lean CLAY GRAVELLY lean CLAY with SAND
GP	Poorly graded GRAVEL Poorly graded GRAVEL with SAND		
GW-GM	Well-graded GRAVEL with SILT Well-graded GRAVEL with SILT and SAND	CL-ML	SILTY CLAY SILTY CLAY with SAND SILTY CLAY with GRAVEL SANDY SILTY CLAY SANDY SILTY CLAY with GRAVEL GRAVELLY SILTY CLAY GRAVELLY SILTY CLAY with SAND
GW-GC	Well-graded GRAVEL with CLAY (or SILTY CLAY) Well-graded GRAVEL with CLAY and SAND (or SILTY CLAY and SAND)		
GP-GM	Poorly graded GRAVEL with SILT Poorly graded GRAVEL with SILT and SAND	ML	SILT SILT with SAND SILT with GRAVEL SANDY SILT SANDY SILT with GRAVEL GRAVELLY SILT GRAVELLY SILT with SAND
GP-GC	Poorly graded GRAVEL with CLAY (or SILTY CLAY) Poorly graded GRAVEL with CLAY and SAND (or SILTY CLAY and SAND)		
GM	SILTY GRAVEL SILTY GRAVEL with SAND	OL	ORGANIC lean CLAY ORGANIC lean CLAY with SAND ORGANIC lean CLAY with GRAVEL SANDY ORGANIC lean CLAY SANDY ORGANIC lean CLAY with GRAVEL GRAVELLY ORGANIC lean CLAY GRAVELLY ORGANIC lean CLAY with SAND
GC	CLAYEY GRAVEL CLAYEY GRAVEL with SAND		
GC-GM	SILTY, CLAYEY GRAVEL SILTY, CLAYEY GRAVEL with SAND	OL	ORGANIC SILT ORGANIC SILT with SAND ORGANIC SILT with GRAVEL SANDY ORGANIC SILT SANDY ORGANIC SILT with GRAVEL GRAVELLY ORGANIC SILT GRAVELLY ORGANIC SILT with SAND
SW	Well-graded SAND Well-graded SAND with GRAVEL		
SP	Poorly graded SAND Poorly graded SAND with GRAVEL	CH	Fat CLAY Fat CLAY with SAND Fat CLAY with GRAVEL SANDY fat CLAY SANDY fat CLAY with GRAVEL GRAVELLY fat CLAY GRAVELLY fat CLAY with SAND
SW-SM	Well-graded SAND with SILT Well-graded SAND with SILT and GRAVEL		
SW-SC	Well-graded SAND with CLAY (or SILTY CLAY) Well-graded SAND with CLAY and GRAVEL (or SILTY CLAY and GRAVEL)	MH	Elastic SILT Elastic SILT with SAND Elastic SILT with GRAVEL SANDY elastic SILT SANDY elastic SILT with GRAVEL GRAVELLY elastic SILT GRAVELLY elastic SILT with SAND
SP-SM	Poorly graded SAND with SILT Poorly graded SAND with SILT and GRAVEL		
SP-SC	Poorly graded SAND with CLAY (or SILTY CLAY) Poorly graded SAND with CLAY and GRAVEL (or SILTY CLAY and GRAVEL)	OH	ORGANIC fat CLAY ORGANIC fat CLAY with SAND ORGANIC fat CLAY with GRAVEL SANDY ORGANIC fat CLAY SANDY ORGANIC fat CLAY with GRAVEL GRAVELLY ORGANIC fat CLAY GRAVELLY ORGANIC fat CLAY with SAND
SM	SILTY SAND SILTY SAND with GRAVEL		
SC	CLAYEY SAND CLAYEY SAND with GRAVEL	OH	ORGANIC elastic SILT ORGANIC elastic SILT with SAND ORGANIC elastic SILT with GRAVEL SANDY ORGANIC elastic SILT SANDY ORGANIC elastic SILT with GRAVEL GRAVELLY ORGANIC elastic SILT GRAVELLY ORGANIC elastic SILT with SAND
SC-SM	SILTY, CLAYEY SAND SILTY, CLAYEY SAND with GRAVEL		
PT	PEAT	OL/OH	ORGANIC SOIL ORGANIC SOIL with SAND ORGANIC SOIL with GRAVEL SANDY ORGANIC SOIL SANDY ORGANIC SOIL with GRAVEL GRAVELLY ORGANIC SOIL GRAVELLY ORGANIC SOIL with SAND
	COBBLES COBBLES and BOULDERS BOULDERS		

FIELD AND LABORATORY TESTING

- (C) Consolidation (ASTM D 2435)
- (CL) Collapse Potential (ASTM D 5333)
- (CP) Compaction Curve (CTM 216)
- (CR) Corrosivity Testing (CTM 643, CTM 422, CTM 417)
- (CU) Consolidated Undrained Triaxial (ASTM D 4767)
- (DS) Direct Shear (ASTM D 3080)
- (EI) Expansion Index (ASTM D 4829)
- (M) Moisture Content (ASTM D 2216)
- (OC) Organic Content-% (ASTM D 2974)
- (P) Permeability (CTM 220)
- (PA) Particle Size Analysis (ASTM D 422)
- (PI) Plasticity Index (AASHTO T 90) Liquid Limit (AASHTO T 89)
- (PL) Point Load Index (ASTM D 5731)
- (PM) Pressure Meter
- (PP) Pocket Penetrometer
- (R) R-Value (CTM 301)
- (SE) Sand Equivalent (CTM 217)
- (SG) Specific Gravity (AASHTO T 100)
- (SL) Shrinkage Limit (ASTM D 427)
- (SW) Swell Potential (ASTM D 4546)
- (TV) Pocket Torvane
- (UC) Unconfined Compression-Soil (ASTM D 2166) Unconfined Compression-Rock (ASTM D 2938)
- (UU) Unconsolidated Undrained Triaxial (ASTM D 2850)
- (UW) Unit Weight (ASTM D 4767)
- (VS) Vane Shear (AASHTO T 223)

APPARENT DENSITY OF COHESIONLESS SOILS

Description	SPT N_{60} (Blows / 12 inches)
Very loose	0 - 4
Loose	5 - 10
Medium Dense	11 - 30
Dense	31 - 50
Very Dense	> 50

MOISTURE

Description	Criteria
Dry	Absence of moisture, dusty, dry to the touch
Moist	Damp but no visible water
Wet	Visible free water, usually soil is below water table

PERCENT OR PROPORTION OF SOILS

Description	Criteria
Trace	Particles are present but estimated to be less than 5%
Few	5 to 10%
Little	15 to 25%
Some	30 to 45%
Mostly	50 to 100%

PARTICLE SIZE

Description		Size
Boulder		> 12"
Cobble		3" to 12"
Gravel	Coarse	3/4" to 3"
	Fine	No. 4 to 3/4"
Sand	Coarse	No. 10 to No. 4
	Medium	No. 40 to No. 10
	Fine	No. 200 to No. 40

CEMENTATION

Description	Criteria
Weak	Crumbles or breaks with handling or little finger pressure.
Moderate	Crumbles or breaks with considerable finger pressure.
Strong	Will not crumble or break with finger pressure.

CONSISTENCY OF COHESIVE SOILS

Description	Unconfined Compressive Strength (tsf)	Pocket Penetrometer Measurement (tsf)	Torvane Measurement (tsf)	Field Approximation
Very Soft	< 0.25	< 0.25	< 0.12	Easily penetrated several inches by fist
Soft	0.25 to 0.50	0.25 to 0.50	0.12 to 0.25	Easily penetrated several inches by thumb
Medium Stiff	0.50 to 1.0	0.50 to 1.0	0.25 to 0.50	Penetrated several inches by thumb with moderate effort
Stiff	1 to 2	1 to 2	0.50 to 1.0	Readily indented by thumb but penetrated only with great effort
Very Stiff	2 to 4	2 to 4	1.0 to 2.0	Readily indented by thumbnail
Hard	> 4.0	> 4.0	> 2.0	Indented by thumbnail with difficulty

PLASTICITY OF FINE-GRAINED SOILS

Description	Criteria
Nonplastic	A 1/8-inch thread cannot be rolled at any water content.
Low	The thread can barely be rolled and the lump cannot be formed when drier than the plastic limit.
Medium	The thread is easy to roll and not much time is required to reach the plastic limit. The thread cannot be rerolled after reaching the plastic limit. The lump crumbles when drier than the plastic limit.
High	It takes considerable time rolling and kneading to reach the plastic limit. The thread can be rerolled several times after reaching the plastic limit. The lump can be formed without crumbling when drier than the plastic limit.

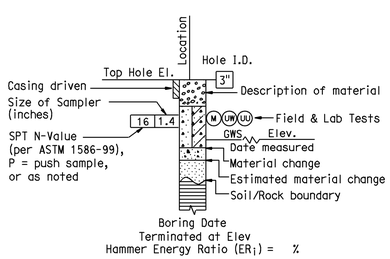

ROTARY BORING

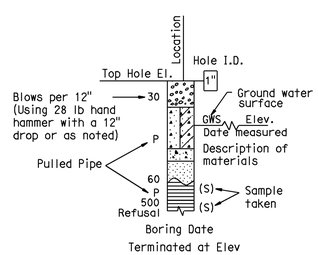

HAND BORING

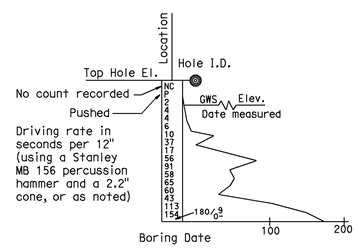

DYNAMIC CONE PENETRATION BORING

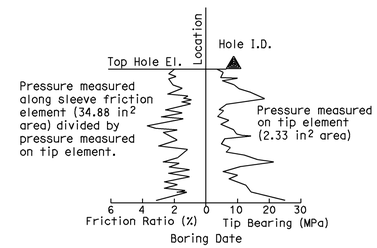

CONE PENETRATION TEST (CPT) SOUNDING

BOREHOLE IDENTIFICATION

Symbol	Hole Type	Description
Size	A	Auger Boring
Size	R P	Rotary drilled boring Rotary percussion boring (air)
Size HQ	R	Rotary drilled diamond core
Size	HD HA	Hand driven (1-inch soil tube) Hand Auger
●	D	Dynamic Cone Penetration Boring
◕	B	Hollow Stem Auger Boring (HSA)
▲	CPT	Cone Penetration Test (ASTM D 5778-95)
□	O	Other

Note: Size in inches.

RETAINING WALL No. 628

SOIL LEGEND

LOG OF TEST BORINGS SHEET 2 OF 4

Jon Hanaguchi
DESIGN OVERSIGHT Jon Hanaguchi
11-24-09
SIGN OFF DATE

DRAWN BY K. Reyes
CHECKED BY H. Nofal

R. Bethapudi
FIELD INVESTIGATION BY:
DATE

PREPARED FOR THE STATE OF CALIFORNIA DEPARTMENT OF TRANSPORTATION

Ayman Salama
PROJECT ENGINEER

BRIDGE NO. 55E0091
POST MILES 19.36

ORIGINAL SCALE IN INCHES FOR REDUCED PLANS 0 1 2 3

CU 12220
EA 0F0321

DISREGARD PRINTS BEARING EARLIER REVISION DATES
REVISION DATES (PRELIMINARY STAGE ONLY) 02/27/09 04/07/09 04/17/09 06/08/09

SHEET 13 OF 15

FILE => 55e0091-z-1tb02.dgn

USERNAME => trmikes1 DATE PLOTTED => 26-JAN-2010 TIME PLOTTED => 07:48

REFERENCE: CALTRANS SOIL & ROCK LOGGING, CLASSIFICATION, AND PRESENTATION MANUAL (JUNE 2007)

DIST	COUNTY	ROUTE	POST MILES TOTAL PROJECT	SHEET No	TOTAL SHEETS
12	Ora	57	18.4/20.9	735	856

GEOTECHNICAL PROFESSIONAL — 06/08/09 DATE

1-25-10
PLANS APPROVAL DATE

REGISTERED PROFESSIONAL ENGINEER — HISHAM M. NOFAL No. 2765 Exp. 09/30/09 GEOTECHNICAL — STATE OF CALIFORNIA

The State of California or its officers or agents shall not be responsible for the accuracy or completeness of electronic copies of this plan sheet.

OCTA
550 S. MAIN STREET
ORANGE, CA 92863

CH2M HILL
6 HUTTON CENTRE DRIVE, SUITE 700
SANTA ANA, CA 92707

PERCENT CORE RECOVERY (REC) & ROCK QUALITY DESIGNATION (RQD)

$$REC = \frac{\sum \text{Length of the recovered core pieces (inches)}}{\text{Total length of core run (inches)}} \times 100\%$$

$$RQD = \frac{\sum \text{Length of intact core pieces} \geq 4''}{\text{Total length of core run (inches)}} \times 100\%$$

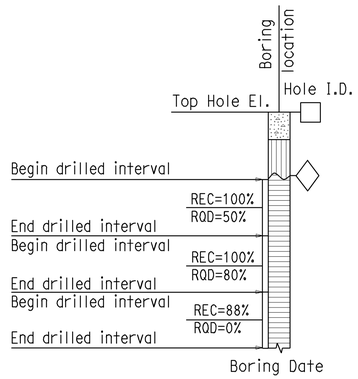

RELATIVE STRENGTH OF INTACT ROCK

Term	Uniaxial Compressive Strength (PSI)
Extremely Strong	> 30,000
Very Strong	14,500 - 30,000
Strong	7,000 - 14,500
Medium Strong	3,500 - 7,000
Weak	700 - 3,500
Very Weak	150 - 700
Extremely Weak	< 150

BEDDING SPACING

Description	Thickness / Spacing
Massive	Greater than 10 ft
Very thickly bedded	3 to 10 ft
Thickly bedded	1 to 3 ft
Moderately bedded	3-5/8" to 1 ft
Thinly bedded	1-1/4" to 3-5/8"
Very thinly bedded	3/8" to 1-1/4"
Laminated	Less than 3/8"

LEGEND OF ROCK MATERIALS

- IGNEOUS ROCK
- SEDIMENTARY ROCK
- METAMORPHIC ROCK

ROCK HARDNESS

Description	Criteria
Extremely Hard	Specimen cannot be scratched with a pocket knife or sharp pick; can only be chipped with repeated heavy hammer blows.
Very Hard	Specimen cannot be scratched with a pocket knife or sharp pick. Breaks with repeated heavy hammer blows.
Hard	Specimen can be scratched with a pocket knife or sharp pick with difficulty (heavy pressure). Heavy hammer blows required to break specimen.
Moderately Hard	Specimen can be scratched with pocket knife or sharp pick with light or moderate pressure. Core breaks with moderate hammer pressure.
Moderately Soft	Specimen can be grooved 1/6" deep with a pocket knife or sharp pick with moderate or heavy pressure. Breaks with light hammer blow or heavy manual pressure.
Soft	Specimen can be grooved or gouged easily by a pocket knife or sharp pick with light pressure, can be scratched with fingernail. Breaks with light to moderate manual pressure.
Very Soft	Specimen can be readily indented, grooved or gouged with fingernail, or carved with a pocket knife. Breaks with light manual pressure.

FRACTURE DENSITY

Description	Observed Fracture Density
Unfractured	No fractures.
Very slightly fractured	Lengths greater than 3 feet.
Slightly fractured	Lengths from 1 to 3 feet with few lengths less than 1 foot or greater than 3 feet.
Moderately fractured	Lengths mostly in 4" to 1 foot range with most lengths about 8"
Intensely fractured	Lengths average from 1 to 4" with scattered fragmented intervals with lengths less than 4"
Very intensely fractured	Mostly chips and fragments with a few scattered short core lengths.

Combination descriptors (such as "Very intensely to intensely fractured") are used where equal distribution of both fracture density characteristics is present over a significant interval or exposure, or where characteristics are "in between" the descriptor definitions. Only two adjacent descriptors may be combined.

WEATHERING DESCRIPTORS FOR INTACT ROCK

Description	Diagnostic features					General Characteristics
	Chemical Weathering-Discoloration and/or oxidation		Mechanical Weathering-Grain boundary conditions (disaggregation) primarily for granitics and some coarse-grained sediments	Texture and Solutioning		
	Body of Rock	Fracture Surfaces		Texture	Solutioning	
Fresh	No discoloration, not oxidized.	No discoloration or oxidation.	No separation, intact (tight).	No change.	No solutioning.	Hammer rings when crystalline rocks are struck.
Slightly Weathered	Discoloration or oxidation is limited to surface of, or short distance from, fractures; some feldspar crystals are dull.	Minor to complete discoloration or oxidation of most surfaces.	No visible separation, intact (tight).	Preserved.	Minor leaching of some soluble minerals may be noted.	Hammer rings when crystalline rocks are struck. Body of rock not weakened.
Moderately Weathered	Discoloration or oxidation extends from fractures usually throughout; Fe-Mg minerals are "rusty," feldspar crystals are "cloudy."	All fracture surfaces are discolored or oxidized.	Partial separation of boundaries visible.	Generally preserved.	Soluble minerals may be mostly leached.	Hammer does not ring when rock is struck. Body of rock is slightly weakened.
Intensely Weathered	Discoloration or oxidation throughout; all feldspars and Fe-Mg minerals are altered to clay to some extent; or chemical alteration produces in-situ disaggregation, see grain boundary conditions.	All fracture surfaces are discolored or oxidized, surfaces friable.	Partial separation, rock is friable; in semiarid conditions granitics are disaggregated.	Texture altered by chemical disintegration (hydration, argillation).	Leaching of soluble minerals may be complete.	Dull sound when struck with hammer, usually can be broken with moderate to heavy manual pressure or by light hammer blow without reference to planes of weakness such as incipient or hairline fractures, or veinlets. Rock is significantly weakened.
Decomposed	Discolored or oxidized throughout, but resistant minerals such as quartz may be unaltered; all feldspars and Fe-Mg minerals are completely altered to clay.		Complete separation of grain boundaries (disaggregated).	Resembles a soil, partial or complete remnant rock structure may be preserved; leaching of soluble minerals usually complete.		Can be granulated by hand. Resistant minerals such as quartz may be present as "stringers" or "dikes."

Combination descriptors (such as "slightly weathered to fresh") are permissible where equal distribution of both weathering characteristics is present over significant intervals or where characteristics present are "in between" the diagnostic feature. However, combination descriptors should not be used where significant, identifiable zones can be delineated. Only two adjacent descriptors may be combined. "Very intensely weathered" is the combination descriptor for "intensely weathered to decomposed."

DESIGN OVERSIGHT — Jon Hamaguchi
11-24-09
SIGN OFF DATE

DRAWN BY K. Reyes
CHECKED BY H. Nofal

R. Bethapudi
FIELD INVESTIGATION BY:
DATE

PREPARED FOR THE STATE OF CALIFORNIA DEPARTMENT OF TRANSPORTATION

Ayman Salama
PROJECT ENGINEER

BRIDGE NO. 55E0091
POST MILES 19.36

RETAINING WALL No. 628
ROCK LEGEND
LOG OF TEST BORINGS SHEET 3 OF 4

ORIGINAL SCALE IN INCHES FOR REDUCED PLANS 0 1 2 3

CU 12220
EA 0F0321

DISREGARD PRINTS BEARING EARLIER REVISION DATES
REVISION DATES: 02/18/09 03/27/09 04/27/09 06/08/09

SHEET 14 OF 15

FILE => 55e0091-z-1tb03.dgn

USERNAME => trmikest DATE PLOTTED => 26-JAN-2010 TIME PLOTTED => 07:48

FED. AID DIST. NO.	STATE	FISCAL YEAR	SHEET NO.	TOTAL SHEETS
7	CALIF.			

DIST.	COUNTY	ROUTE	SECTION	SHEET NO.	TOTAL SHEETS
07	ORA.	57	18.4/20.2	160	180

Date approved: September 30, 1968

LEGEND OF BORING OPERATIONS

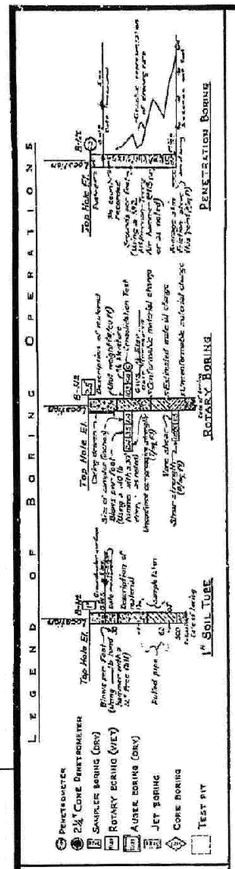

LEGEND OF EARTH MATERIALS

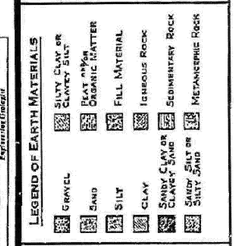

CLASSIFICATION OF MATERIAL BASED ON STANDARD GRADE SIZE LIMITS

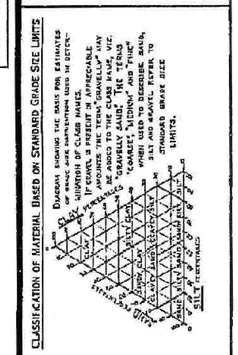

NOTE: Classification of earth material as shown on this sheet is based upon field inspection and is not to be construed to imply mechanical analysis.

FIELD STUDY	Jr. H. Carr	4-18-67
DRAWN	Jr. G. Allison	4-27-67
CHECKED	Jr. R. Corbaley	4-24-67

Approval Recommended: C. Gordon Lee, Jr. S.E. Engineer Geologist

BRIDGE DEPARTMENT
ENGINEERING GEOLOGY SECTION

160

BENCH MARK

B.M.# 629-D-66 Elev 361.18
Fd. anchor bolt on top of northeast pedestal of Hathaway Oil Well No. 8

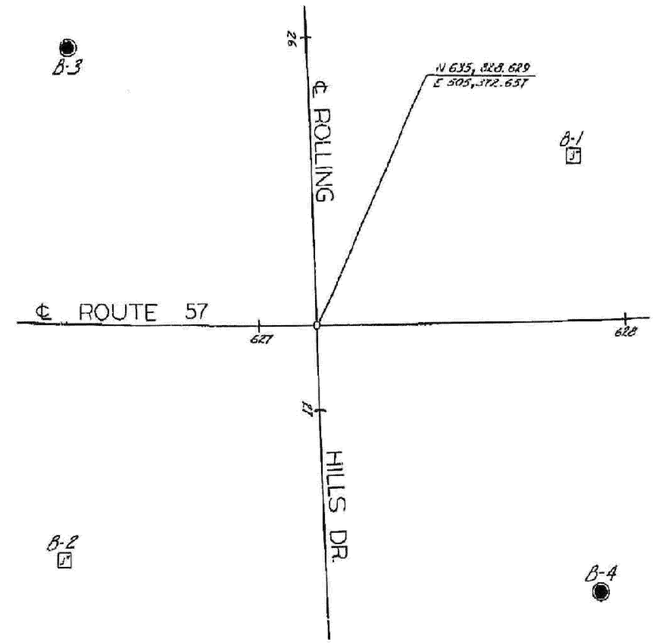

PLAN

Scale: 1" = 20'

NO GROUND WATER ENCOUNTERED DURING THIS INVESTIGATION BY BRIDGE DEPT., GEOLOGY SECTION. DATE April, 1967

INFORMATION ON ACTUAL FOUNDATION CONDITIONS ENCOUNTERED IS ON FILE IN BRIDGE GEOLOGY SECTION

PROFILE

Scale: Vert. 1" = 10'
Horiz. 1" = 20'

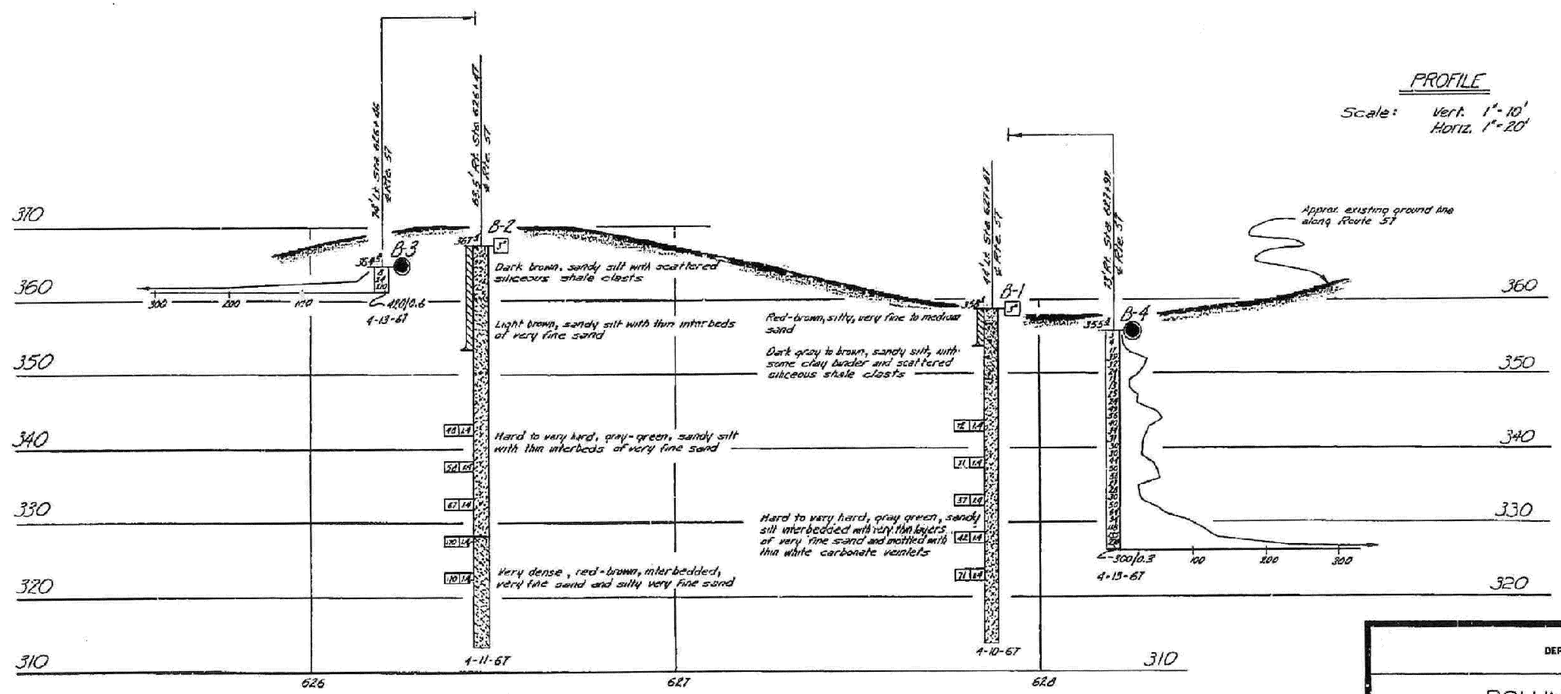

DIVISION OF ENGINEERING SERVICES - GEOTECHNICAL SERVICES					
As-Built Log of Test Borings sheet is considered an informational document only. As such, the State of California registration seal with signature, license number and registration certificate expiration date confirm that this is a true and accurate copy of the original document. This drawing is available and presented only for the convenience of any bidder, contractor or other interested party.					
DIST.	COUNTY	ROUTE	POST MILES-TOTAL PROJECT	Sheet No.	Total Sheets
12	Ora	57	18.4/20.9	736	856
Hisham M. Nofal — REGISTERED CIVIL ENGINEER			06/08/09 — DATE		
RETAINING WALL NO. 628					
LOG OF TEST BORINGS SHEET 4 OF 4					
NOTE: A COPY OF THIS LOG OF TEST BORINGS IS AVAILABLE AT OFFICE OF STRUCTURE MAINTENANCE AND INVESTIGATIONS, SACRAMENTO, CALIFORNIA		CU: 12220 EA: 0F0321	BRIDGE No. 55E0091		
To accompany plans dated 1-25-10				Sheet 15	of 15

REGISTERED PROFESSIONAL ENGINEER — HISHAM M. NOFAL — No. 2765 — Exp. 09/30/09 — GEOTECHNICAL — STATE OF CALIFORNIA

AS BUILT PLANS
Contract No. 07-032134
Date Completed
Document No. 70001578

STATE OF CALIFORNIA
DEPARTMENT OF PUBLIC WORKS
DIVISION OF HIGHWAYS

ROLLING HILLS DRIVE UNDERCROSSING

LOG OF TEST BORINGS

SHEET	OF	SCALE: As Noted	BRIDGE 55-0083	FILE	DRAWING 55-0083-7
10	10				

Chg. 07200
W.A 032131

Disregard prints bearing earlier numbers → PREL. DRAWING No. PR- 1/6/10

FILENAME => 55e0091-z-ltb04.tif

USERNAME => jromire3 DATE PLOTTED => 24-NOV-2009 TIME PLOTTED => 16:19

DIST	COUNTY	ROUTE	POST MILES TOTAL PROJECT	SHEET No	TOTAL SHEETS
12	Ora	57	18.4/20.9	737	856

REGISTERED CIVIL ENGINEER 06/08/09 DATE

1-25-10
PLANS APPROVAL DATE

REGISTERED PROFESSIONAL ENGINEER JENNIFER L. ELWOOD No. C64034 Exp. 9/30/10 CIVIL STATE OF CALIFORNIA

The State of California or its officers or agents shall not be responsible for the accuracy or completeness of electronic copies of this plan sheet.

OCTA
550 S. MAIN STREET
ORANGE, CA 92863

CH2M HILL
6 HUTTON CENTRE DRIVE, SUITE 700
SANTA ANA, CA 92707

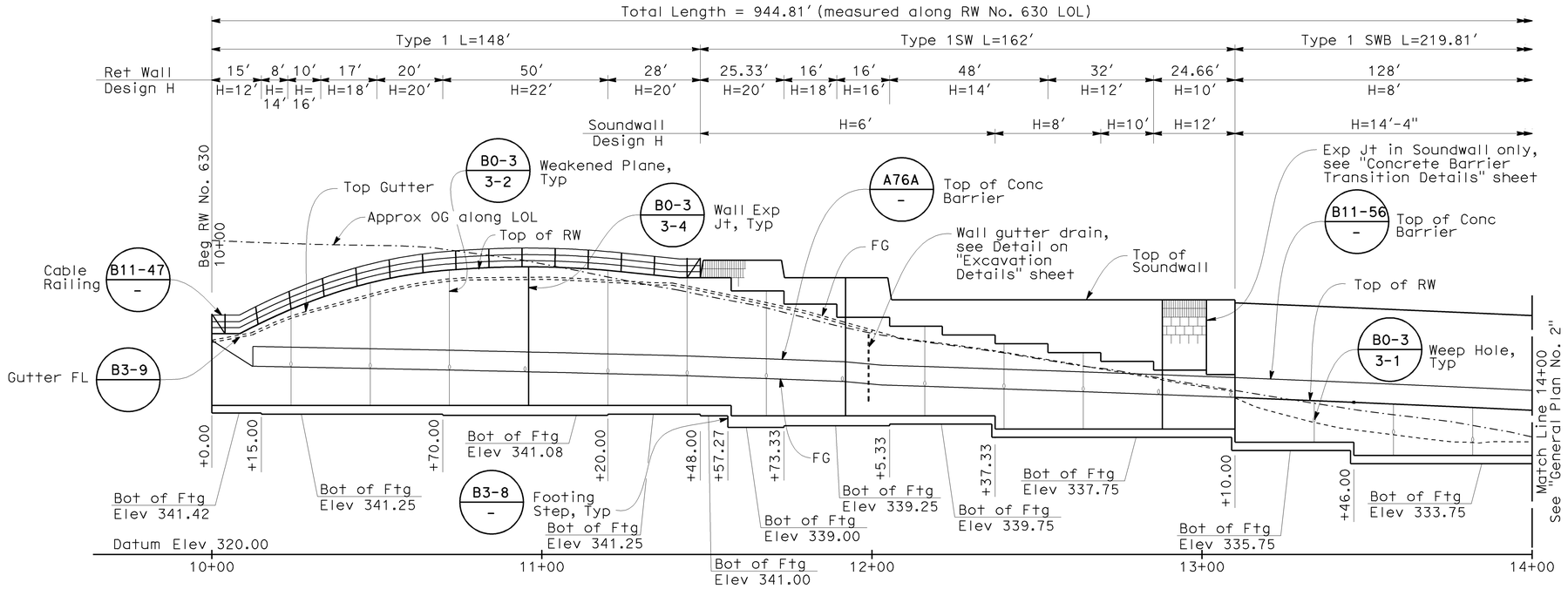

MIRRORED ELEVATION

Horiz: 1"=20'
Vert: 1"=10'

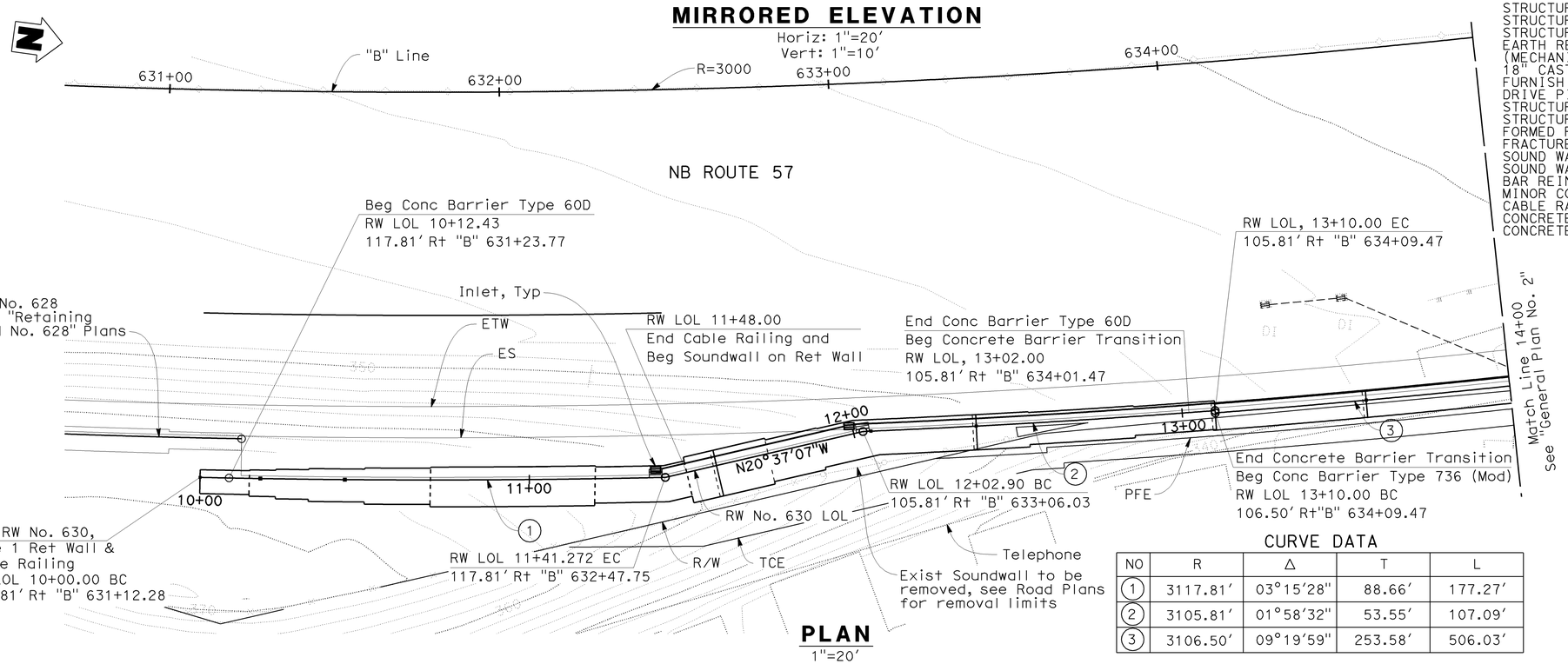

PLAN

1"=20'

NOTES:

1. Contractor to field verify all utility locations prior to retaining wall construction.
2. For Retaining Wall Elevation Table, see "Retaining Wall Details No. 1" sheet.
3. For Typical Sections, see "Typical Sections" sheet.
4. For Index of Sheets and Standard Plans List, see "General Plan No. 2" sheet.
5. For Pile Data Table, see "Overhead Sign Pedestal Details" sheet.
6. For Drainage System & Details, see Drainage Plans.

RETAINING WALL NO 630
QUANTITIES

STRUCTURE EXCAVATION (RETAINING WALL)	3,900	CY
STRUCTURE EXCAVATION (TYPE Y-1) (AERIALLY DEPOSITED LEAD)	128	CY
STRUCTURE BACKFILL (RETAINING WALL)	2,920	CY
EARTH RETAINING STRUCTURE (MECHANICALLY STABILIZED EARTH WALL)	7,370	SQFT
18" CAST-IN-DRILLED-HOLE CONCRETE PILING	953	LF
FURNISH PILING (CLASS 90)	805	LF
DRIVE PILE (CLASS 90)	17	EA
STRUCTURAL CONCRETE, RETAINING WALL	865	CY
STRUCTURAL CONCRETE, BARRIER SLAB	193	CY
FORMED RELIEF TEXTURE (FLOWERED PATTERN)	1,790	SQFT
FRACTURED RIB TEXTURE	3,865	SQFT
SOUND WALL (BARRIER)(MASONRY BLOCK)	9,097	SQFT
SOUND WALL (MASONRY BLOCK)	1,068	SQFT
BAR REINFORCING STEEL (RETAINING WALL)	95,900	LB
MINOR CONCRETE (MISCELLANEOUS CONSTRUCTION)	8	CY
CABLE RAILING	148	LF
CONCRETE BARRIER (TYPE 60D)	298	LF
CONCRETE BARRIER (TYPE 736 MODIFIED)	635	LF

CURVE DATA

NO	R	Δ	T	L
1	3117.81'	03°15'28"	88.66'	177.27'
2	3105.81'	01°58'32"	53.55'	107.09'
3	3106.50'	09°19'59"	253.58'	506.03'

DESIGN OVERSIGHT Jon Hamaguchi
11-24-09
SIGN OFF DATE

	BY	CHECKED			
DESIGN	J. Elwood	D. Sun	LRFD	LIVE LOADING: HL-93 AND PERMIT (P-15) DESIGN LOAD	
DETAILS	J. Elwood	D. Sun	LAYOUT	P. Walker	M. Atiqullah
QUANTITIES	B. Ho	L. Ros	SPECIFICATIONS	M. Remolador	PLANS AND SPECS COMPARED M. Atiqullah

PREPARED FOR THE STATE OF CALIFORNIA DEPARTMENT OF TRANSPORTATION

Ayman Salama
PROJECT ENGINEER

BRIDGE NO. 55E0092
POST MILES 19.41

RETAINING WALL NO. 630
GENERAL PLAN NO. 1

DESIGN GENERAL PLAN SHEET (ENGLISH) (REV. 2/25/05)

ORIGINAL SCALE IN INCHES FOR REDUCED PLANS 0 1 2 3

CU 12220
EA 0F0321

DISREGARD PRINTS BEARING EARLIER REVISION DATES

REVISION DATES (PRELIMINARY STAGE ONLY) 02/18/09 04/07/09 04/17/09 06/08/09

SHEET 1 OF 26

FILE => 55e0092-a-gp01.dgn

USERNAME => trmikest DATE PLOTTED => 26-JAN-2010 TIME PLOTTED => 07:49

DIST	COUNTY	ROUTE	POST MILES TOTAL PROJECT	SHEET No	TOTAL SHEETS
12	Ora	57	18.4/20.9	738	856

REGISTERED CIVIL ENGINEER 06/08/09 DATE

1-25-10
PLANS APPROVAL DATE

The State of California or its officers or agents shall not be responsible for the accuracy or completeness of electronic copies of this plan sheet.

REGISTERED PROFESSIONAL ENGINEER JENNIFER L. ELWOOD No. C64034 Exp. 9/30/10 CIVIL STATE OF CALIFORNIA

OCTA
550 S. MAIN STREET
ORANGE, CA 92863

CH2M HILL
6 HUTTON CENTRE DRIVE, SUITE 700
SANTA ANA, CA 92707

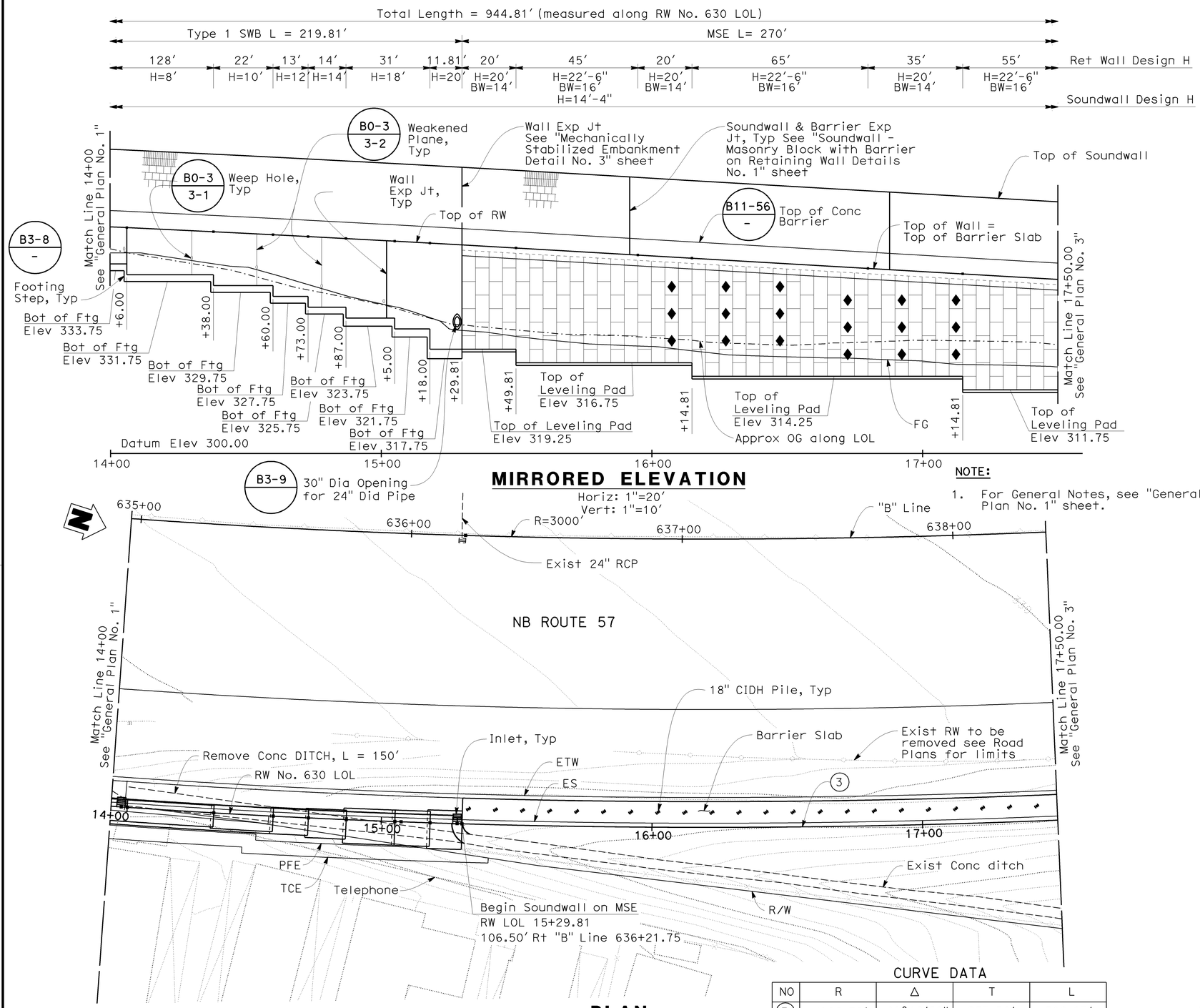

PLAN
1"=20′

CURVE DATA

NO	R	Δ	T	L
3	3106.50′	09°19′59"	253.58′	506.03′

LEGEND:

◆ Indicates Inspection Wire, for details see "Mechanically Stabilized Embankment Details No. 3" sheet.

NOTE:

1. For General Notes, see "General Plan No. 1" sheet.

INDEX TO PLANS

SHEET NO.	TITLE
1.	GENERAL PLAN NO. 1
2.	GENERAL PLAN NO. 2
3.	GENERAL PLAN NO. 3
4.	TYPICAL SECTIONS
5.	EXCAVATION DETAILS
6.	RETAINING WALL TYPE 1SW
7.	RETAINING WALL TYPE 1SWB
8.	RETAINING WALL DETAILS NO. 1
9.	RETAINING WALL DETAILS NO. 2
10.	CONCRETE BARRIER TRANSITION DETAILS
11.	MECHANICALLY STABILIZED EMBANKMENT DETAIL NO. 1
12.	MECHANICALLY STABILIZED EMBANKMENT DETAIL NO. 2
13.	MECHANICALLY STABILIZED EMBANKMENT DETAIL NO. 3
14.	MECHANICALLY STABILIZED EMBANKMENT DETAIL NO. 5
15.	MECHANICALLY STABILIZED EMBANKMENT DETAIL NO. 6
16.	OVERHEAD SIGN PEDESTAL DETAILS
17.	SOUNDWALL ON RETAINING WALL - MASONRY BLOCK DETAILS NO. 1
18.	SOUNDWALL ON RETAINING WALL - MASONRY BLOCK DETAILS NO. 2
19.	SOUNDWALL - MASONRY BLOCK WITH BARRIER ON RETAINING WALL DETAILS NO. 1
20.	SOUNDWALL - MASONRY BLOCK WITH BARRIER ON RETAINING WALL DETAILS NO. 2
21.	SOUNDWALL MASONRY BLOCK MISCELLANEOUS DETAILS
22.	ARCHITECTURAL TREATMENT DETAILS
23.	LOG OF TEST BORINGS SHEET 1 OF 4
24.	LOG OF TEST BORINGS SHEET 2 OF 4
25.	LOG OF TEST BORINGS SHEET 3 OF 4
26.	LOG OF TEST BORINGS SHEET 4 OF 4

STANDARD PLANS DATED MAY 2006

A10A	ACRONYMS AND ABBREVIATIONS (SHEET 1 OF 2)
A10B	ACRONYMS AND ABBREVIATIONS (SHEET 2 OF 2)
A10C	SYMBOLS (SHEET 1 OF 2)
A10D	SYMBOLS (SHEET 2 OF 2)
A76A	CONCRETE BARRIER TYPE 60
B0-3	BRIDGE DETAILS
B2-5	PILE DETAILS CLASS 90 AND CLASS 140
B3-8	RETAINING WALL DETAILS NO. 1
B3-9	RETAINING WALL DETAILS NO. 2
B11-47	CABLE RAILING
B11-56	CONCRETE BARRIER TYPE 736
D102	UNDERDRAINS
ES-6A	ELECTRICAL SYSTEM (LIGHTING STANDARD, TYPES 15 AND 21)
ES-6B	ELECTRICAL SYSTEM (LIGHTING STANDARD, TYPES 15 AND 21, BARRIER RAIL MOUNTED DETAILS)
S2	OVERHEAD SIGNS - TRUSS, SINGLE POST TYPE - POST TYPES II THRU IX
S3	OVERHEAD SIGNS - TRUSS, SINGLE POST TYPE - BASE PLATE AND ANCHORAGE DETAILS

Standard Plan Sheet No.

Detail No.

DESIGN OVERSIGHT Jon Hamaguchi
11-24-09
SIGN OFF DATE

	BY	CHECKED			
DESIGN	J. Elwood	D. Sun	LRFD	LIVE LOADING: HL-93 AND PERMIT (P-15) DESIGN LOAD	
DETAILS	J. Elwood	D. Sun	LAYOUT	P. Walker	M. Atiqullah
QUANTITIES	B. Ho	L. Ros	SPECIFICATIONS	M. Remolador	M. Atiqullah (PLANS AND SPECS COMPARED)

PREPARED FOR THE STATE OF CALIFORNIA DEPARTMENT OF TRANSPORTATION

Ayman Salama
PROJECT ENGINEER

BRIDGE NO. 55E0092
POST MILES 19.41

RETAINING WALL NO. 630
GENERAL PLAN NO. 2

DESIGN GENERAL PLAN SHEET (ENGLISH) (REV. 2/25/05)

ORIGINAL SCALE IN INCHES FOR REDUCED PLANS 0 1 2 3

CU 12220
EA 0F0321

DISREGARD PRINTS BEARING EARLIER REVISION DATES

REVISION DATES (PRELIMINARY STAGE ONLY) 02/18/09 04/07/09 04/17/09 06/08/09

SHEET 2 OF 26

FILE => 55e0092-a-gp02.dgn

USERNAME => frmikest DATE PLOTTED => 26-JAN-2010 TIME PLOTTED => 07:50

DIST	COUNTY	ROUTE	POST MILES TOTAL PROJECT	SHEET No	TOTAL SHEETS
12	Ora	57	18.4/20.9	739	856

Jennifer Elwood 06/08/09
REGISTERED CIVIL ENGINEER DATE

1-25-10
PLANS APPROVAL DATE

REGISTERED PROFESSIONAL ENGINEER JENNIFER L. ELWOOD No. C64034 Exp. 9/30/10 CIVIL STATE OF CALIFORNIA

The State of California or its officers or agents shall not be responsible for the accuracy or completeness of electronic copies of this plan sheet.

OCTA
550 S. MAIN STREET
ORANGE, CA 92863

CH2M HILL
6 HUTTON CENTRE DRIVE, SUITE 700
SANTA ANA, CA 92707

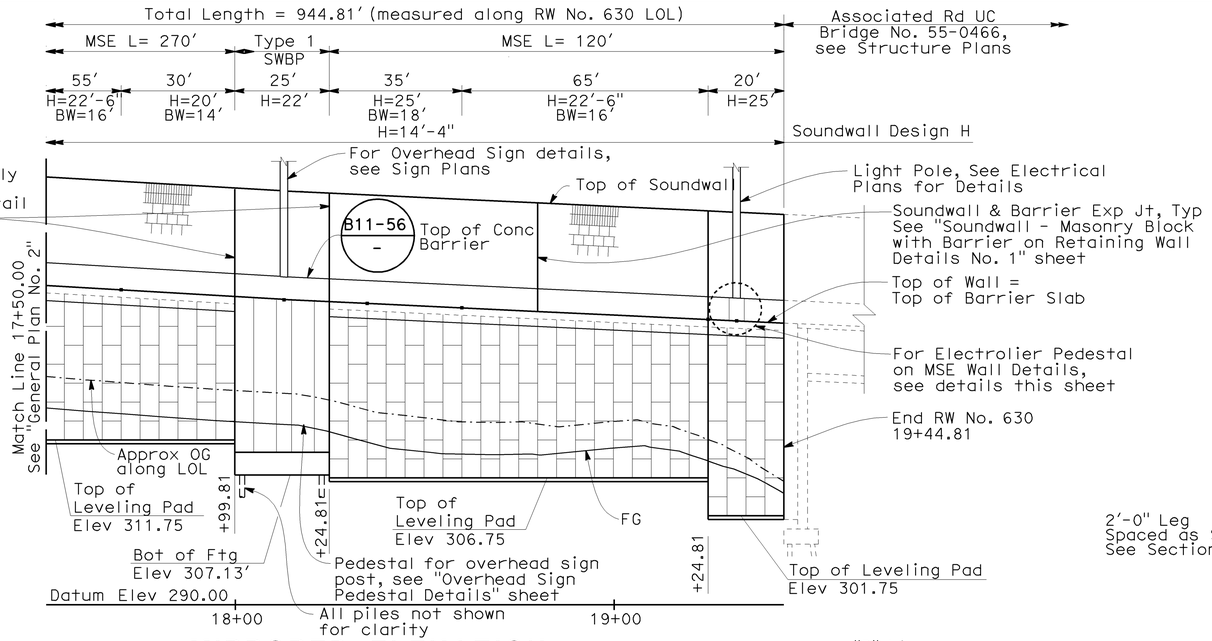

MIRRORED ELEVATION

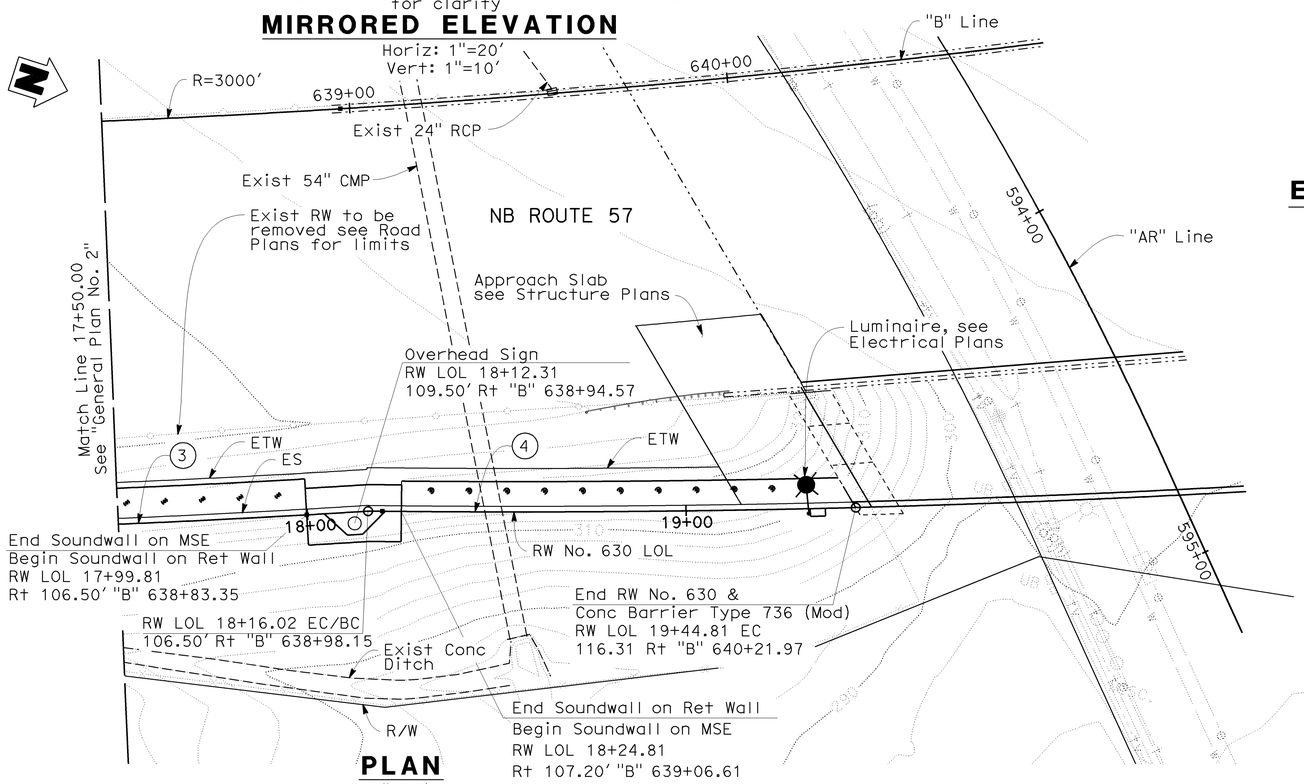

PLAN

1"=20'

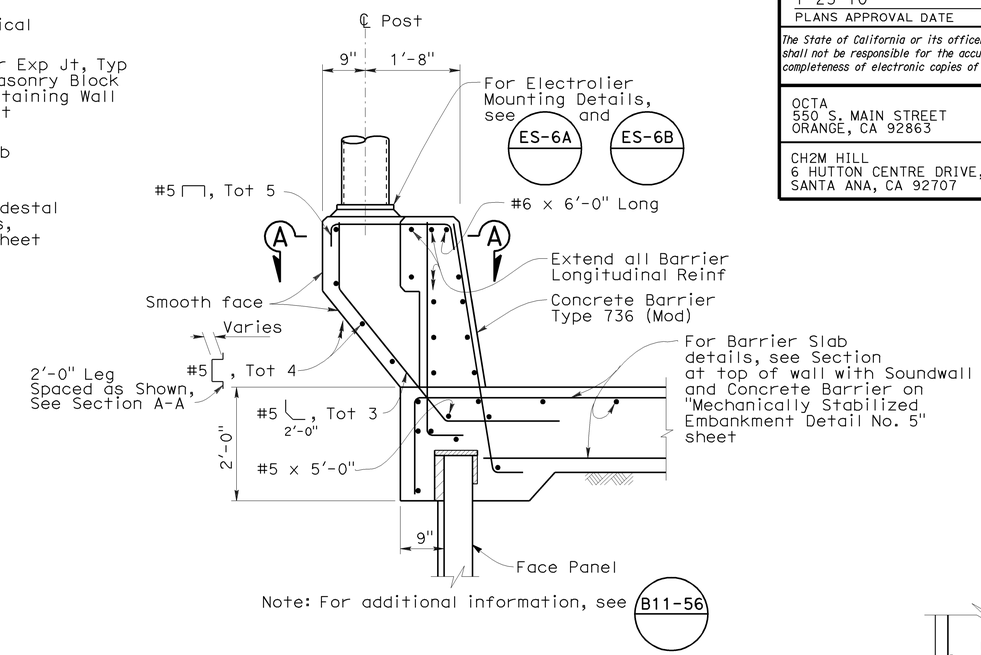

ELECTROLIER PEDESTAL ON MSE WALL

3/4" = 1'-0"

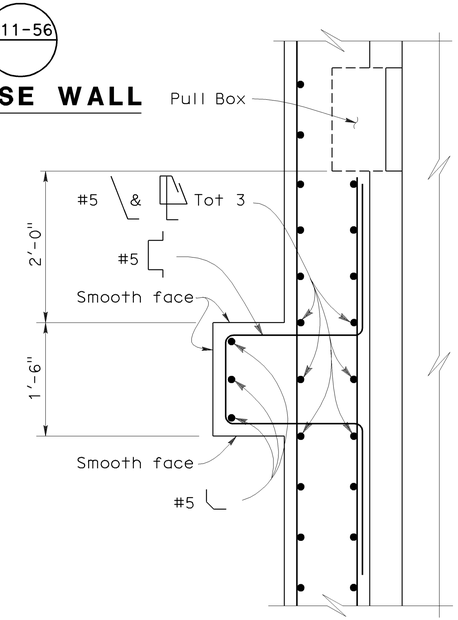

SECTION A-A

1" = 1'-0"

NOTE:

1. For General Notes, see "General Plan No. 1" sheet.

CURVE DATA

NO	R	Δ	T	L
3	3106.50'	09°19'59"	253.57'	506.02'
4	3463.50'	02°07'50"	64.40'	128.79'

Jon Hamaguchi DESIGN OVERSIGHT	DESIGN	BY J. Elwood	CHECKED D. Sun	LRFD	LIVE LOADING: HL-93 AND PERMIT (P-15) DESIGN LOAD		
11-24-09 SIGN OFF DATE	DETAILS	BY J. Elwood	CHECKED D. Sun	LAYOUT	BY P. Walker	CHECKED M. Atiqullah	
	QUANTITIES	BY B. Ho	CHECKED L. Ros	SPECIFICATIONS	BY M. Remolador	PLANS AND SPECS COMPARED M. Atiqullah	

PREPARED FOR THE STATE OF CALIFORNIA DEPARTMENT OF TRANSPORTATION

Ayman Salama
PROJECT ENGINEER

BRIDGE NO. 55E0092
POST MILES 19.41

RETAINING WALL NO. 630
GENERAL PLAN NO. 3

DESIGN GENERAL PLAN SHEET (ENGLISH) (REV. 2/25/05)

ORIGINAL SCALE IN INCHES FOR REDUCED PLANS 0 1 2 3

CU 12220
EA 0F0321

DISREGARD PRINTS BEARING EARLIER REVISION DATES

REVISION DATES (PRELIMINARY STAGE ONLY) 02/18/09 04/07/09 04/17/09 06/08/09

SHEET 3 OF 26

FILE => 55e0092-a-gp03.dgn

USERNAME => trmikest DATE PLOTTED => 26-JAN-2010 TIME PLOTTED => 07:50

DIST	COUNTY	ROUTE	POST MILES TOTAL PROJECT	SHEET No	TOTAL SHEETS
12	Ora	57	18.4/20.9	740	856

REGISTERED CIVIL ENGINEER 06/08/09 DATE

1-25-10
PLANS APPROVAL DATE

The State of California or its officers or agents shall not be responsible for the accuracy or completeness of electronic copies of this plan sheet.

REGISTERED PROFESSIONAL ENGINEER JENNIFER L. ELWOOD No. C64034 Exp. 9/30/10 CIVIL STATE OF CALIFORNIA

OCTA
550 S. MAIN STREET
ORANGE, CA 92863

CH2M HILL
6 HUTTON CENTRE DRIVE, SUITE 700
SANTA ANA, CA 92707

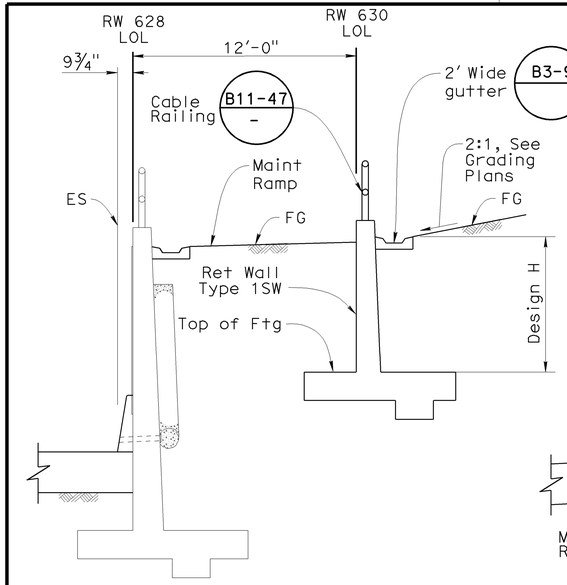

TYPICAL SECTION

¼"=1'-0"

Sta 10+00.00 to 10+12.43

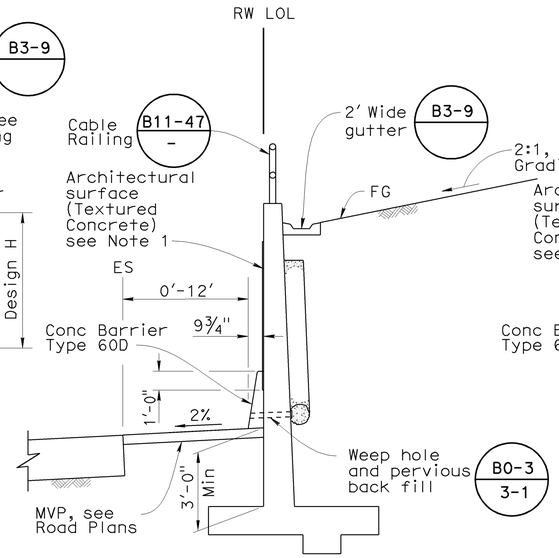

TYPICAL SECTION

¼"=1'-0"

Sta 10+12.43 to 11+48.00

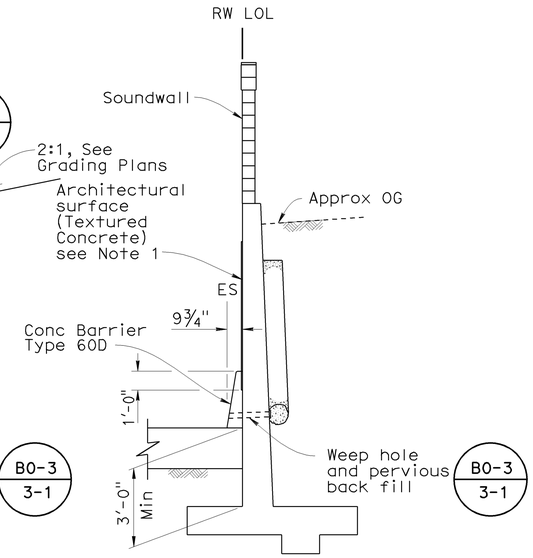

TYPICAL SECTION

¼"=1'-0"

Sta 11+48.00 to 13+10.00

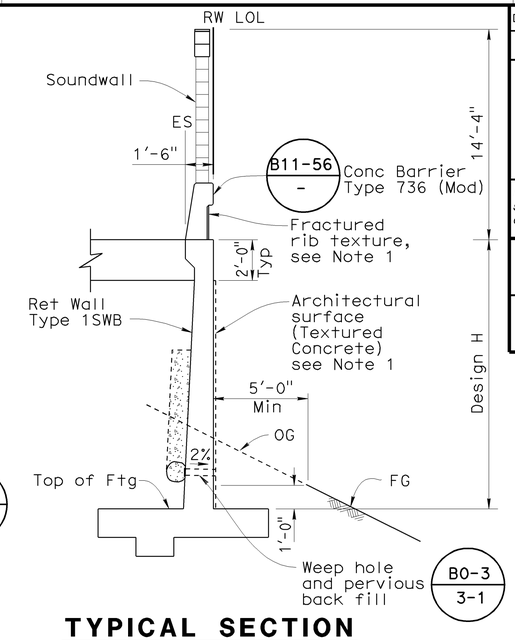

TYPICAL SECTION

¼"=1'-0"

Sta 13+10.00 to 15+29.81

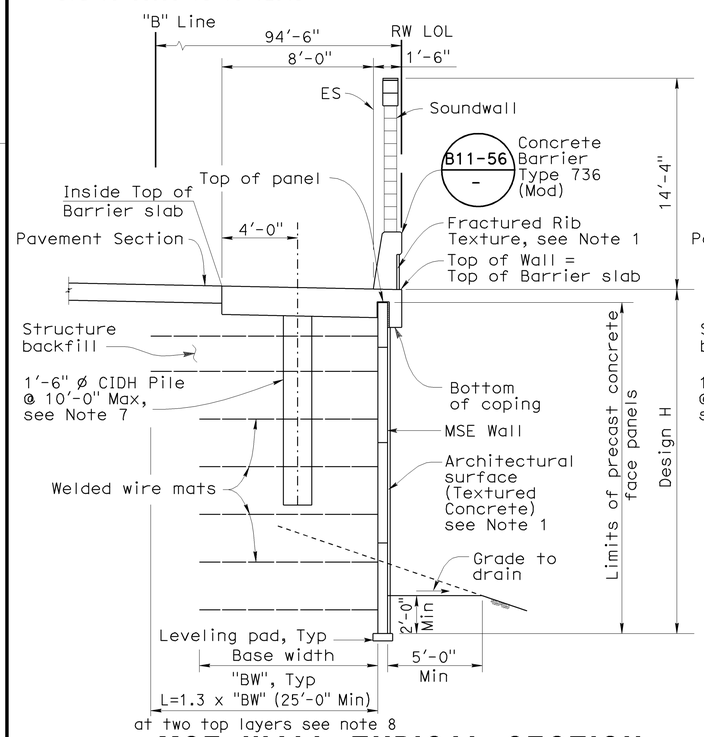

MSE WALL TYPICAL SECTION

¼"=1'-0"

Sta 15+29.81 to 17+99.81

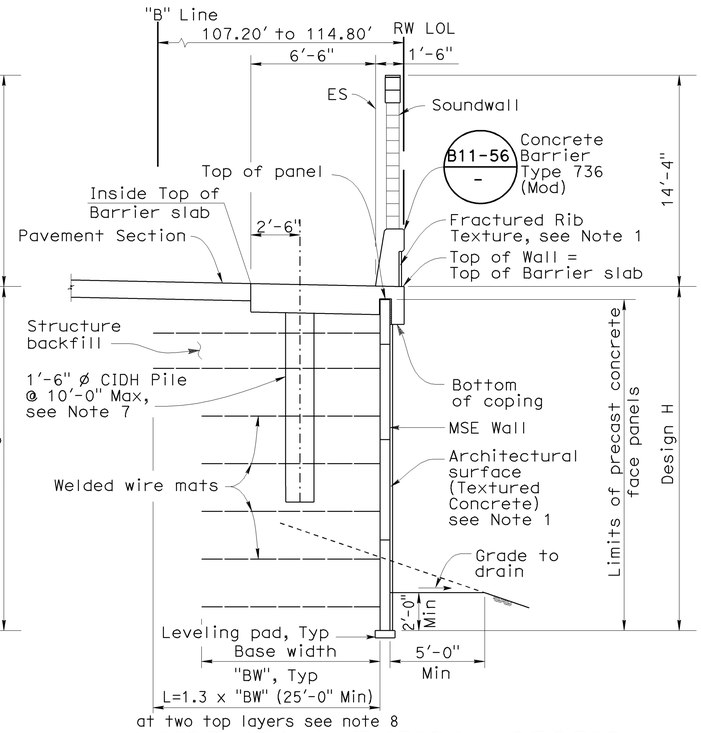

MSE WALL TYPICAL SECTION

¼"=1'-0"

Sta 18+24.81 to 19+44.81

MSE NOTES:

1. For design height "H", base width "BW", see "General Plan No.1, No.2, & No.3. Section" sheets. For limits of excavation & backfill, see "Mechanically Stabilized Embankment Details No. 6" sheet.
2. For welded wire mats, see Welded Wire Mat Schedule on "Retaining Wall Details" sheet.
3. For Barrier slab details, see "Mechanically Stabilized Embankment Details No. 5" sheet.
4. For panel details, see "Mechanically Stabilized Embankment Details No. 1" sheet.
5. For General Notes and wire mat details, see "Mechanically Stabilized Embankment Details No. 2" sheet.
6. ◆ Indicates locations of inspection wires. For inspection wire details, see "Mechanically Stabilized Embankment Details No. 3" sheet.
7. Spacing between CIDH Piles is at 10'-0" maximum. Contractor must revise the spacing of CIDH piles before drilling so the pile remains minimum 4'-0" clear from the existing utilities.
8. The MSE Wall Designer/Manufacturer should verify the (BW) value based on additional surcharge applied from the sound wall.

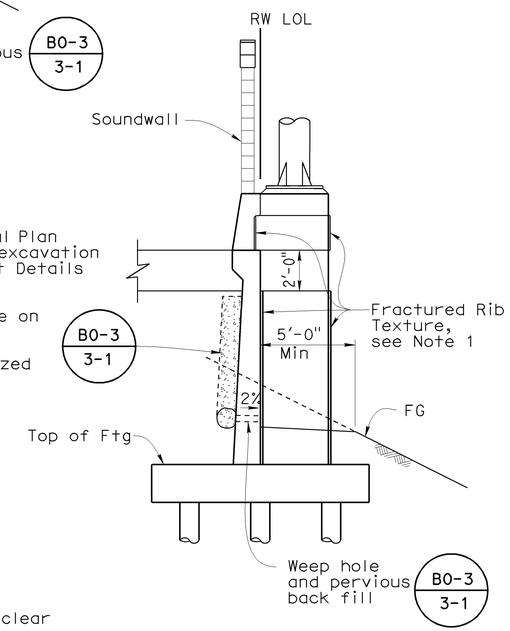

OVERHEAD SIGN TYPICAL SECTION

No Scale

Sta 17+99.81 to 18+24.81

NOTE:

1. For Fractured Rib Texture and Architectural Surface (Textured Concrete) details, see "Architectural Treatment Details" sheet.

DESIGN OVERSIGHT Jon Hamaguchi
11-24-09
SIGN OFF DATE

	BY	CHECKED
DESIGN	J. Elwood	D. Sun
DETAILS	P. Walker	D. Sun
QUANTITIES	B. Ho	L. Ros

PREPARED FOR THE STATE OF CALIFORNIA DEPARTMENT OF TRANSPORTATION

Ayman Salama
PROJECT ENGINEER

BRIDGE NO. 55E0092
POST MILE 19.41

RETAINING WALL NO. 630
TYPICAL SECTIONS

DESIGN DETAIL SHEET (ENGLISH) (REV. 2/25/05)

ORIGINAL SCALE IN INCHES FOR REDUCED PLANS 0 1 2 3

CU 12220
EA 0F0321

DISREGARD PRINTS BEARING EARLIER REVISION DATES

REVISION DATES (PRELIMINARY STAGE ONLY) 02/18/09 04/07/09 04/17/09 06/08/09

SHEET 4 OF 26

FILE => 55e0092-a-ts01.dgn

USERNAME => trmikes1 DATE PLOTTED => 26-JAN-2010 TIME PLOTTED => 07:50

DIST	COUNTY	ROUTE	POST MILES TOTAL PROJECT	SHEET No	TOTAL SHEETS
12	Ora	57	18.4/20.9	741	856

REGISTERED CIVIL ENGINEER 06/08/09 DATE

1-25-10
PLANS APPROVAL DATE

REGISTERED PROFESSIONAL ENGINEER
MOHAMMED ATIQULLAH
No. C47027
Exp. 12/31/09
CIVIL
STATE OF CALIFORNIA

The State of California or its officers or agents shall not be responsible for the accuracy or completeness of electronic copies of this plan sheet.

OCTA
550 S. MAIN STREET
ORANGE, CA 92863

CH2M HILL
6 HUTTON CENTRE DRIVE, SUITE 700
SANTA ANA, CA 92707

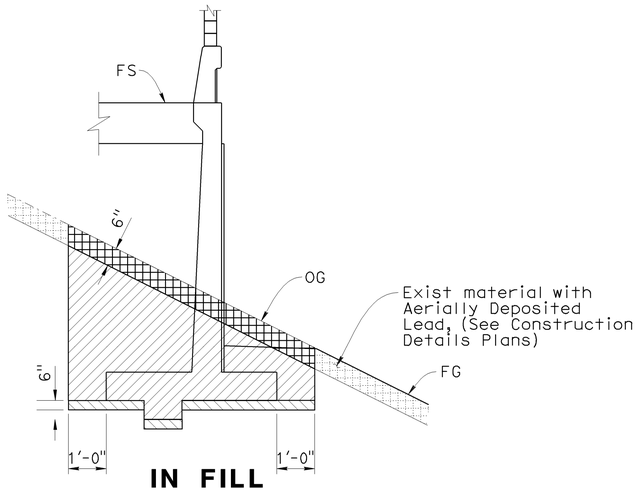

IN FILL

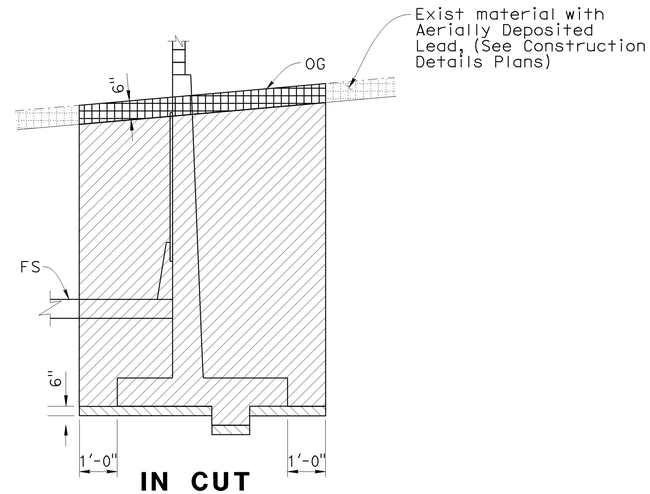

IN CUT

LIMITS OF PAYMENT OF EXCAVATION FOR RETAINING WALL

No Scale

Note:
For Backfill see Caltrans Standard Plans

LEGEND

- Indicates Structure Excavation (Type Y-1) (Aerially Deposited Lead)
- Structure Excavation (Retaining Wall)
- Structure Overexcavation (From Sta 10+00.00 to 13+10.00 only)

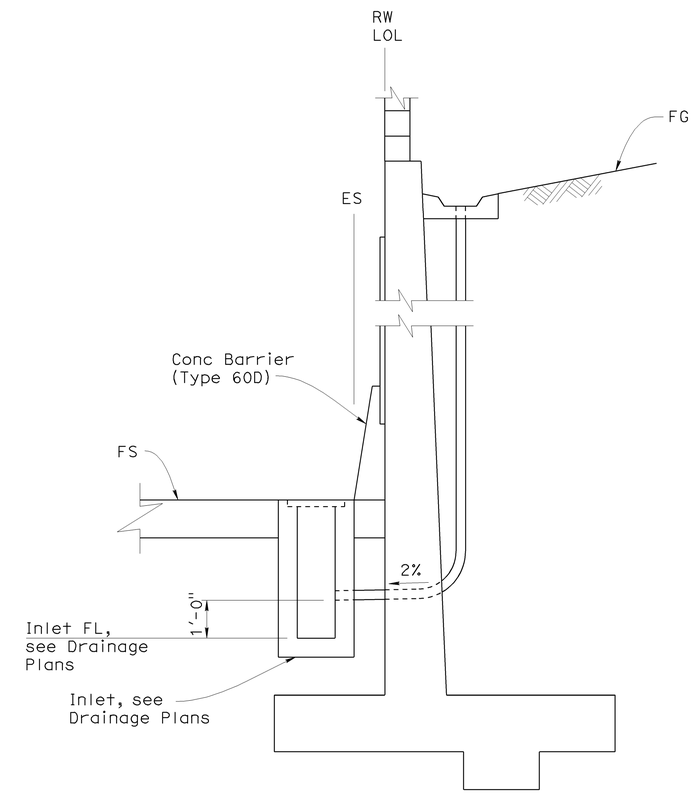

WALL GUTTER DRAIN DETAIL

No Scale

DESIGN OVERSIGHT Jon Hamaguchi
12-17-09
SIGN OFF DATE

	BY	CHECKED
DESIGN	M. Atiqullah	E. Cutler
DETAILS	A. Issa	E. Cutler
QUANTITIES	B. Ho	L. Ros

PREPARED FOR THE STATE OF CALIFORNIA DEPARTMENT OF TRANSPORTATION

Ayman Salama
PROJECT ENGINEER

BRIDGE NO. 55E0092
POST MILE 19.41

RETAINING WALL NO. 630
EXCAVATION DETAILS

DESIGN DETAIL SHEET (ENGLISH) (REV. 2/25/05)

ORIGINAL SCALE IN INCHES FOR REDUCED PLANS 0 1 2 3

CU 12220
EA 0F0321

DISREGARD PRINTS BEARING EARLIER REVISION DATES

REVISION DATES (PRELIMINARY STAGE ONLY) 06/08/09

SHEET 5 OF 26

FILE => 55e0092-b-exc.dgn

USERNAME => trrichf DATE PLOTTED => 25-JAN-2010 TIME PLOTTED => 13:43

DIST.	COUNTY	ROUTE	POST MILES TOTAL PROJECT	SHEET NO.	TOTAL SHEETS
12	Ora	57	18.4/20.9	742	856

REGISTERED ENGINEER - CIVIL DATE 06/08/09

1-25-10
PLANS APPROVAL DATE

REGISTERED PROFESSIONAL ENGINEER JENNIFER L. ELWOOD No. C64034 Exp. 9/30/10 CIVIL STATE OF CALIFORNIA

The State of California or its officers or agents shall not be responsible for the accuracy or completeness of electronic copies of this plan sheet.

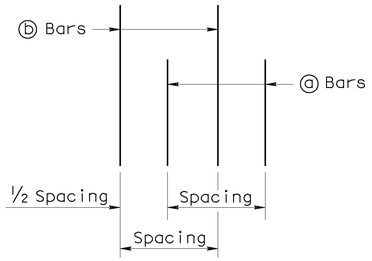

DETAIL B

No Scale

GENERAL NOTES

1. For soundwall and retaining wall architectural finish or texture, see details elsewhere in project plans.
2. For details not shown and drainage notes, see B3-8
3. Footing cover, 1'-6" minimum.
4. Limit of no splicing rebars = 3 times the bottom thickness of the stem.
5. Placement of reinforcement:

   ⓑ & ⓒ bars are spliced together.

   * ⓐ & ⓑ bars are bundled together.

   ** Alternate ⓐ & ⓑ bars are shown in "Detail B".

   Cont = Continuous.
6. For soundwall reinforcement, see "Soundwall Wall Masonry Block" sheets in Standard Plans.

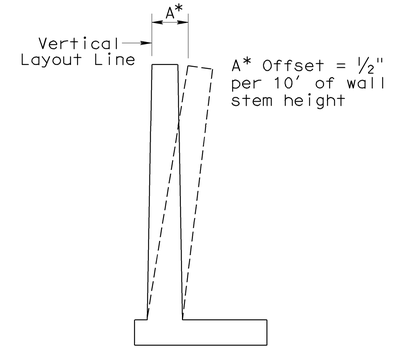

WALL OFFSET

No Scale

Values for offsetting forms to be determined by the Engineer

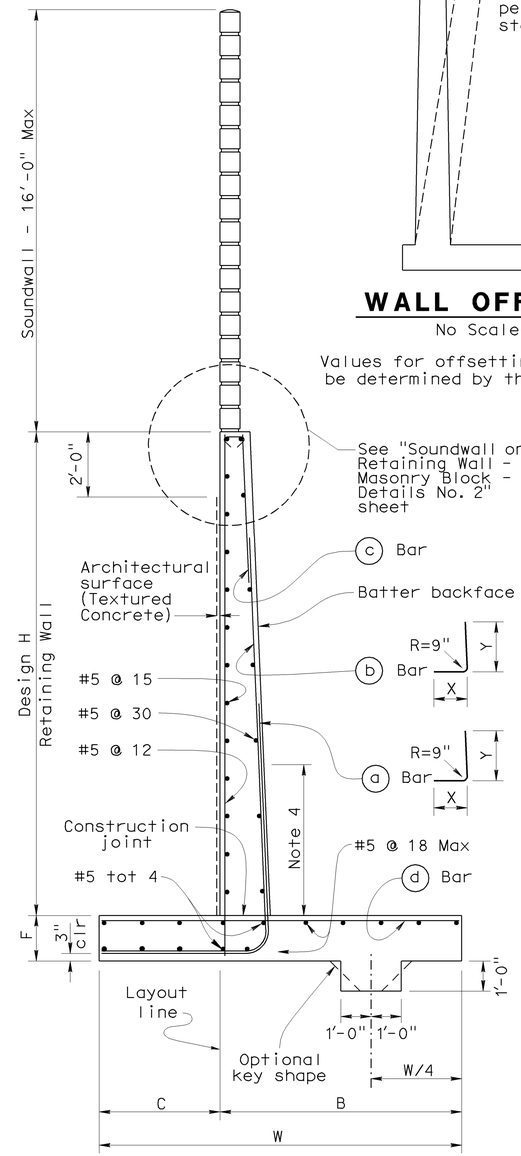

SPREAD FOOTING SECTION

No Scale

DESIGN DATA

DESIGN: Load Factor Design (LFD)

CONCRETE: Reinforced Concrete, f'c = 3600 psi
fy = 60,000 psi

LOADING CASE:
Case 1: Level ground with 240 psf surcharge and 16' Soundwall
Case 2: Sloping ground and 16' Soundwall 2

Seismic Load = 0.57 Dead Load
Wind Load = 33 psf
Dead Load of Soundwall = 1414 lb/ft 1

SEISMIC LOAD: SOIL
Kh = 0.3g
Kv = 0.0
Kae : Mononobe-Okabe Method

SOIL: ϕ = 34° γ = 120 pcf
Equivalent fluid pressure:
= 36 pcf for determination of toe pressure
= 27 pcf for determination of heel pressure

EXTERNAL STABILITY:
Group 1 : D + E + SC
Group 2 : D + E + SC + W
Group 3 : D + PYM

INTERNAL STABILITY (LFD):
Group A : βD + 1.7E + 1.7SC
Group B : βD + 1.7E + 1.3W
Group C (stem) : 1.0D + 1.0E + 1.0EQD + 1.0EQE
Group C (footing) : D + PYM

Where : β = 1.0 or 1.3 whichever controls design
D = Dead Load
E = Lateral Earth Pressure
SC = Surcharge
W = Wind load
EQD = Seismic Dead Load
EQE = Seismic Lateral Earth Pressure
PYM = Probable Yield Moment (1.3 x Nominal Yield Moment of Stem)

3

TABLE OF REINFORCING STEEL DIMENSIONS AND DATA

Design H	10'	12'	14'	16'	18'	20'
W	8'-9"	9'-9"	10'-9"	12'-0"	13'-0"	14'-3"
C	3'-0"	3'-3"	3'-6"	4'-0"	4'-3"	4'-9"
B	5'-9"	6'-6"	7'-3"	8'-0"	8'-9"	9'-6"
F Spread footing	1'-3"	1'-3"	1'-3"	1'-6"	1'-6"	1'-9"
Batter	½:12	½:12	½:12	½:12	½:12	½:12
Stem thcknss @ top	1'-0"	1'-0"	1'-0"	1'-0"	1'-0"	1'-0"
ⓐ Bars		#6 @18XX	#7 @18XX	#8 @18XX	#9 @18XX	#10 @18XX
X		Cont	Cont	Cont	Cont	Cont
Y		8'-0"	6'-6"	7'-6"	8'-6"	9'-6"
ⓑ Bars	#5 @ 9	#6 @18XX	#7 @18XX	#8 @18XX	#9 @18XX	#10 @18XX
X	Cont	Cont	Cont	Cont	Cont	Cont
Y	Cont	Cont	10'-6"	13'-0"	15'-0"	17'-6"
ⓒ Bars			#6 @18	#6 @18	#6 @18	#6 @18
ⓓ Bars	#5 @12	#5 @ 9	#6 @ 9	#6 @ 9	#6 @ 6	#8 @ 9
Ultimate Bearing Capacity Req'd k/sf	6.1	6.6	7.3	8.1	9.0	9.9

3

SPECIAL DETAILS

STANDARD DRAWING

FILE NO. xs14-210e

APPROVED BY G. WANG
RESPONSIBLE TECHNICAL SPECIALIST
APPROVAL DATE 5-19-08

RELEASED BY ROBERTO LACALLE
RESPONSIBLE OFFICE CHIEF
RELEASE DATE REVISED

1 Revised Seismic and Wind Loads
2 Revised Cases
3 Revised Table

STATE OF CALIFORNIA
DEPARTMENT OF TRANSPORTATION

DIVISION OF ENGINEERING SERVICES

BRIDGE NO. 55E0092
POST MILE 19.41

RETAINING WALL NO. 630

RETAINING WALL TYPE 1SW

DS OSD 2147A (ENGLISH STANDARD DRAWING "XS" BORDER REV. 01/11/08)

ORIGINAL SCALE IN INCHES FOR REDUCED PLANS 0 1 2 3

CU 12220
EA 0F0321

DISREGARD PRINTS BEARING EARLIER REVISION DATES

REVISION DATES (PRELIMINARY STAGE ONLY) 02/18/09 04/07/09 04/17/09 06/08/09

SHEET 6 OF 26

USERNAME => trrichf

55e0092-g-1SW.dgn

DATE PLOTTED => 25-JAN-2010 TIME PLOTTED => 13:43

DIST.	COUNTY	ROUTE	POST MILES TOTAL PROJECT	SHEET NO.	TOTAL SHEETS
12	Ora	57	18.4/20.9	743	856

REGISTERED ENGINEER - CIVIL DATE 06/08/09

1-25-10
PLANS APPROVAL DATE

REGISTERED PROFESSIONAL ENGINEER JENNIFER L. ELWOOD No. C64034 Exp. 9/30/10 CIVIL STATE OF CALIFORNIA

The State of California or its officers or agents shall not be responsible for the accuracy or completeness of electronic copies of this plan sheet.

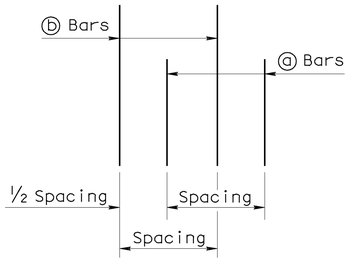

DETAIL B
No Scale

GENERAL NOTES

1. For soundwall and retaining wall architectural finish or texture, see details elsewhere in project plans.
2. For details not shown and drainage notes, see B3-8
3. Footing cover, 1'-6" minimum.
4. Limit of no splicing rebars = 3 times the bottom thickness of the stem.
5. Placement of reinforcements :
   - ⓑ & ⓒ bars are spliced together.
   - ✳ ⓐ & ⓑ bars are bundled together.
   - ✳✳ Alternate ⓐ & ⓑ bars are shown in "Detail B".
   - Cont = Continuous.
6. For Soundwall & Barrier reinforcement, see "Soundwall Masonry Block on Barriers" sheets in Standard Plans.

TABLE 1: TABLE OF REINFORCING STEEL DIMENSIONS AND DATA

	Stem With Haunch						
Design H	8'	10'	12'	14'	16'	18'	20'
W	8'-0"	8'-9"	9'-9"	10'-9"	12'-0"	13'-0"	14'-3"
C	2'-9"	3'-0"	3'-3"	3'-6"	4'-0"	4'-3"	4'-9"
B	5'-3"	5'-9"	6'-6"	7'-3"	8'-0"	8'-9"	9'-6"
F Spread footing	1'-3"	1'-3"	1'-3"	1'-3"	1'-6"	1'-6"	1'-9"
Batter	½ :12	½ :12	½ :12	½ :12	½ :12	½ :12	½ :12
Stem thickn. @ Haunch	1'-0"	1'-0"	1'-0"	1'-0"	1'-0"	1'-0"	1'-0"
ⓐ Bars			#6 @18✳✳	#7 @18✳✳	#8 @18✳✳	#9 @18✳✳	#10 @18✳✳
X			Cont	Cont	Cont	Cont	Cont
Y			8'-0"	6'-6"	7'-6"	8'-6"	9'-6"
ⓑ Bars	#5 @12	#5 @ 9	#6 @18✳✳	#7 @18✳✳	#8 @18✳✳	#9 @18✳✳	#10 @18✳✳
X	Cont	Cont	Cont	Cont	Cont	Cont	Cont
Y	Cont	Cont	Cont	10'-6"	13'-0"	15'-0"	17'-6"
ⓒ Bars				#6 @18	#6 @18	#6 @18	#6 @18
ⓓ Bars	#5 @12	#5 @12	#5 @ 9	#6 @ 9	#6 @ 9	#6 @ 6	#8 @ 9
Ultimate Bearing Capacity Req'd k/sf	5.5	6.1	6.6	7.3	8.1	9.0	9.9

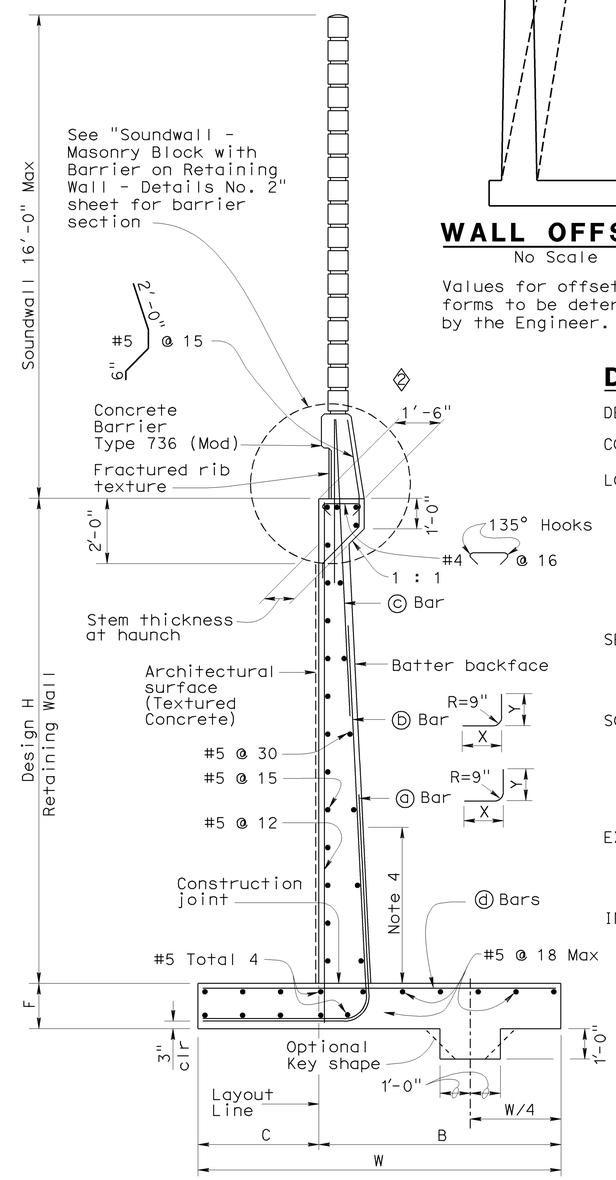

SPREAD FOOTING SECTION
No Scale

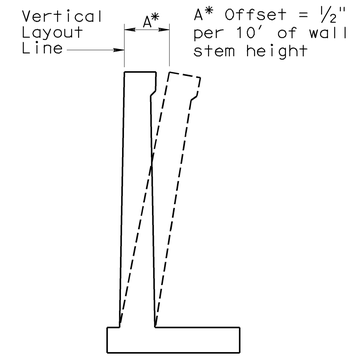

WALL OFFSET
No Scale

Values for offsetting forms to be determined by the Engineer.

DESIGN DATA

DESIGN: Load Factor Design (LFD)

CONCRETE: Reinforced Concrete, f'c = 3600 psi
fy = 60,000 psi

LOADING CASE:
Level ground with 240 psf surcharge and 16' Soundwall

Seismic Load = 0.57 Dead Load 1
Wind Load = 33 psf
Dead Load of Soundwall = 1414 lb/ft
Dead Load of Barrier = 470 lb/ft

SEISMIC LOAD: SOIL
Kh = 0.3g
Kv = 0.0
Kae : Mononobe-Okabe Method

SOIL: Ø = 34° γ = 120 pcf
Equivalent fluid pressure:
= 36 pcf for determination of toe pressure
= 27 pcf for determination of heel pressure

EXTERNAL STABILITY:
Group 1 : D + E + SC
Group 2 : D + E + SC + W
Group 3 : D + PYM

INTERNAL STABILITY (LFD):
Group A : βD + 1.7E + 1.7SC
Group B : βD + 1.7E + 1.3W
Group C (stem) : 1.0D + 1.0E + 1.0EQD + 1.0EQE
Group C (footing) : D + PYM

Where : β = 1.0 or 1.3 whichever controls design
D = Dead Load
E = Lateral Earth Pressure
SC = Surcharge
W = Wind load
EQD = Seismic Dead Load
EQE = Seismic Lateral Earth Pressure
PYM = Probable Yield Moment (1.3 x Nominal Yield Moment of Stem)

SPECIAL DETAILS

STANDARD DRAWING

FILE NO. xs14-220e Revised

APPROVED BY G. WANG — RESPONSIBLE TECHNICAL SPECIALIST
APPROVAL DATE 5-19-08

RELEASED BY ROBERTO LACALLE — RESPONSIBLE OFFICE CHIEF
RELEASE DATE 5-19-08

1 Revised Seismic, Wind Loads & DL of Barrier
2 Removed without haunch detail

STATE OF CALIFORNIA DEPARTMENT OF TRANSPORTATION

DIVISION OF ENGINEERING SERVICES

BRIDGE NO. 55E0092
POST MILE 19.41

RETAINING WALL NO. 630
RETAINING WALL TYPE 1SWB

DS OSD 2147A (ENGLISH STANDARD DRAWING "XS" BORDER REV. 01/11/08)

ORIGINAL SCALE IN INCHES FOR REDUCED PLANS 0 1 2 3

CU 12220
EA 0F0321

DISREGARD PRINTS BEARING EARLIER REVISION DATES

REVISION DATES (PRELIMINARY STAGE ONLY) 02/18/09 04/07/09 04/17/09 06/08/09

SHEET 7 OF 26

USERNAME => trrichf

55e0092-g-1SWB.dgn

DATE PLOTTED => 25-JAN-2010 TIME PLOTTED => 13:43

DIST	COUNTY	ROUTE	POST MILES TOTAL PROJECT	SHEET No	TOTAL SHEETS
12	Ora	57	18.4/20.9	744	856

REGISTERED CIVIL ENGINEER 06/08/09 DATE

1-25-10
PLANS APPROVAL DATE

REGISTERED PROFESSIONAL ENGINEER JENNIFER L. ELWOOD No. C64034 Exp. 9/30/10 CIVIL STATE OF CALIFORNIA

The State of California or its officers or agents shall not be responsible for the accuracy or completeness of electronic copies of this plan sheet.

OCTA
550 S. MAIN STREET
ORANGE, CA 92863

CH2M HILL
6 HUTTON CENTRE DRIVE, SUITE 700
SANTA ANA, CA 92707

LEGEND

2 @ W11 x W11 + 6" x 9"

- Longitudinal wire spacing X Transverse wire spacing
- Longitudinal wire size X Transverse wire size
- Number of welded wire mats per level for a full length panel with 5' nominal height.

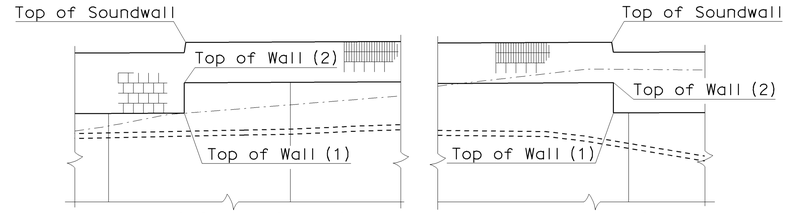

LOCATION OF WALL ELEVATION

No scale

WELDED WIRE MAT SCHEDULE (LOADING CASE 1)

MAXIMUM HEIGHT	10	12.5	15	17.5	20	22.5	25	27.5
MINIMUM BASE WIDTH	8	9	11	12	14	16	18	19
TOP LEVELS OF MESH OVER	2 @ W11 x W11 + 6" x 9" 2 @ W11 x W11 + 6" x 12"	2 @ W11 x W11 + 6" x 9" 2 @ W11 x W11 + 6" x 12" 1 @ W11 x W11 + 6" x 18"	2 @ W11 x W11 + 6" x 9" 2 @ W11 x W11 + 6" x 12" 1 @ W11 x W11 + 6" x 18" 1 @ W11 x W11 + 6" x 24"	2 @ W11 x W11 + 6" x 9" 2 @ W11 x W11 + 6" x 12" 1 @ W11 x W11 + 6" x 18" 2 @ W11 x W11 + 6" x 24"	2 @ W11 x W11 + 6" x 9" 3 @ W11 x W11 + 6" x 18" 3 @ W11 x W11 + 6" x 24"	5 @ W11 x W11 + 6" x 18" 4 @ W11 x W11 + 6" x 24"	5 @ W11 x W11 + 6" x 18" 5 @ W11 x W11 + 6" x 24"	5 @ W11 x W11 + 6" x 18" 5 @ W11 x W11 + 6" x 24" 1 @ W11 x W15 + 6" x 30"

RETAINING WALL ELEVATIONS

RW NO. 630 LOL STA	TOP OF WALL ELEV (1)	TOP OF WALL ELEV (2)	TOP OF GUTTER ELEV	TOP OF SW ELEV
10+00.00	353.45	-	352.45	-
10+10.00	353.86	-	352.86	-
10+20.00	356.29	-	355.29	-
10+30.00	358.36	-	357.36	-
10+40.00	360.07	-	359.07	-
10+50.00	361.41	-	360.41	-
10+60.00	362.40	-	361.40	-
10+70.00	363.02	-	362.02	-
10+80.00	363.37	-	362.37	-
10+90.00	363.56	-	362.56	-
11+00.00	363.57	-	362.57	-
11+10.00	363.40	-	362.40	-
11+20.00	363.05	-	362.05	-
11+30.00	362.54	-	361.54	-
11+40.00	362.02	-	361.02	-
11+41.93	361.92	-	360.92	-
11+48.00	-	-	-	361.92
11+48.89	-	-	-	364.58
11+50.00	361.92	-	360.92	-
11+57.33	361.92	359.92	360.92	-
11+60.00	359.92	-	358.92	364.58
11+70.00	359.92	-	358.92	364.58
11+72.60	-	-	-	364.58
11+73.33	359.92	357.92	358.92	-
11+73.49	-	-	-	361.92
11+80.00	357.92	-	356.92	361.92
11+89.33	357.92	355.92	356.92	-
11+90.00	-	-	-	361.92
12+00.00	355.92	-	354.92	361.92

RW NO. 630 LOL STA	TOP OF WALL ELEV (1)	TOP OF WALL ELEV (2)	TOP OF GUTTER ELEV	TOP OF SW ELEV
12+04.83	-	-	-	361.92
12+05.33	355.92	354.58	354.92	-
12+05.94	-	-	-	358.58
12+10.00	354.58	-	353.58	358.58
12+20.00	-	-	-	358.58
12+21.33	354.58	353.25	353.58	-
12+30.00	353.25	-	352.25	358.58
12+37.33	353.25	351.92	352.25	-
12+40.00	351.92	-	350.92	358.58
12+50.00	351.92		350.92	358.58
12+53.33	351.92	350.58	350.92	-
12+60.00	350.58		349.58	358.58
12+69.33	350.58	349.25	349.58	-
12+70.00	-	-	-	358.58
12+80.00	349.25	-	348.25	358.58
12+85.33	349.25	347.92	348.25	-
12+90.00	347.92	-	346.92	358.58
13+00.00	-	-	-	358.58
13+01.33	347.92	347.25	346.92	-
13+10.00	347.25	343.78	346.25	358.58

RW NO. 630 LOL STA	TOP OF WALL ELEV	FG	TOP OF SW ELEV
13+20.00	343.58	341.82	357.91
13+30.00	343.38	340.48	357.71
13+40.00	343.17	339.33	357.50
13+50.00	342.96	338.61	357.29
13+60.00	342.75	337.98	357.08
13+70.00	342.53	337.38	356.86
13+80.00	342.31	336.98	356.64
13+90.00	342.08	337.05	356.41
14+00.00	341.86	337.03	356.19
14+10.00	341.62	337.04	355.95
14+20.00	341.38	336.36	355.71
14+30.00	341.15	335.61	355.48
14+40.00	340.90	334.87	355.23
14+50.00	340.65	334.41	354.98
14+60.00	340.40	333.06	354.73
14+70.00	340.14	331.60	354.47
14+80.00	339.88	330.13	354.21
14+90.00	339.62	328.72	353.95
15+00.00	339.35	327.60	353.68
15+10.00	339.08	326.37	353.41
15+20.00	338.80	324.70	353.13
15+30.00	338.53	322.70	352.86
15+40.00	338.24	322.29	352.57
15+50.00	337.96	321.58	352.29
15+60.00	337.67	321.02	352.00
15+70.00	337.38	320.53	351.71
15+80.00	337.09	320.14	351.42
15+90.00	336.80	319.93	351.13
16+00.00	336.51	319.75	350.84
16+10.00	336.22	319.22	350.55
16+20.00	335.93	318.64	350.26
16+30.00	335.63	318.15	349.96
16+40.00	335.34	317.98	349.67

RW NO. 630 LOL STA	TOP OF WALL ELEV	FG	TOP OF SW ELEV
16+50.00	335.05	317.83	349.38
16+60.00	334.76	317.70	349.09
16+70.00	334.47	317.62	348.80
16+80.00	334.18	317.46	348.51
16+90.00	333.89	317.26	348.22
17+00.00	333.60	317.03	347.93
17+10.00	333.31	316.54	347.64
17+20.00	333.02	316.38	347.35
17+30.00	332.73	316.31	347.06
17+40.00	332.44	316.17	346.77
17+50.00	332.15	315.94	346.48
17+60.00	331.86	315.54	346.19
17+70.00	331.57	315.17	345.90
17+80.00	331.28	314.80	345.61
17+90.00	330.99	314.44	345.32
18+00.00	330.70	314.12	345.03
18+10.00	330.41	313.84	344.74
18+20.00	330.14	313.29	344.47
18+30.00	329.90	312.04	344.23
18+40.00	329.66	310.69	343.99
18+50.00	329.43	310.16	343.76
18+60.00	329.19	309.86	343.52
18+70.00	328.95	309.81	343.28
18+80.00	328.72	309.75	343.05
18+90.00	328.48	310.23	342.81
19+00.00	328.25	310.71	342.58
19+10.00	328.01	310.73	342.34
19+20.00	327.78	309.68	342.11
19+30.00	327.53	308.03	341.86
19+40.00	327.27	305.89	341.60
19+44.81	327.15	304.49	341.48

DESIGN OVERSIGHT Jon Hamaguchi
11-24-09
SIGN OFF DATE

	BY	CHECKED
DESIGN	J. Elwood	D. Sun
DETAILS	P. Walker	D. Sun
QUANTITIES	B. Ho	L. Ros

PREPARED FOR THE STATE OF CALIFORNIA DEPARTMENT OF TRANSPORTATION

Ayman Salama
PROJECT ENGINEER

BRIDGE NO. 55E0092
POST MILE 19.41

RETAINING WALL NO. 630
RETAINING WALL DETAILS No. 1

DESIGN DETAIL SHEET (ENGLISH) (REV. 2/25/05)

ORIGINAL SCALE IN INCHES FOR REDUCED PLANS 0 1 2 3

CU 12220
EA 0F0321

DISREGARD PRINTS BEARING EARLIER REVISION DATES

REVISION DATES (PRELIMINARY STAGE ONLY) 02/18/09 04/07/09 04/17/09 06/08/09

SHEET 8 OF 26

FILE => 55e0092-g-det01.dgn

USERNAME => trrright DATE PLOTTED => 25-JAN-2010 TIME PLOTTED => 13:43

DIST	COUNTY	ROUTE	POST MILES TOTAL PROJECT	SHEET No	TOTAL SHEETS
12	Ora	57	18.4/20.9	745	856

REGISTERED CIVIL ENGINEER 06/08/09 DATE

1-25-10
PLANS APPROVAL DATE

REGISTERED PROFESSIONAL ENGINEER MOHAMMED ATIQULLAH No. C47027 Exp. 12/31/09 CIVIL STATE OF CALIFORNIA

The State of California or its officers or agents shall not be responsible for the accuracy or completeness of electronic copies of this plan sheet.

OCTA
550 S. MAIN STREET
ORANGE, CA 92863

CH2M HILL
6 HUTTON CENTRE DRIVE, SUITE 700
SANTA ANA, CA 92707

TABLE OF PILE SPACING:
CLASS 90 PILES

DESIGN H	22′
W	15′-0"
C	8′-0"
B	7′-0"
F	3′-0"
M	6′-0"
N	5′-0"
CONFIGURATION	I

TABLE 1:
TABLE OF REINFORCING STEEL
DIMENSIONS AND DATA

	STEM WITH HAUNCH
DESIGN H	22′
STEM BATTER	½:12
STEM THICKNESS @ TOP	1′-6"
STEM THICKNESS @ HAUNCH	1′-0"
(a) BARS	#8 @ 9 *
X	CONT
Y	9′-6"
(b) BARS	#8 @ 9 *
X	CONT
Y	19′-6"
(c) BARS	#6 @ 18
(d) BARS	#6 @ 9
TOTAL (e) BARS	10 #5
TOTAL (f) BARS	8 #5

Cont = Continuous

* = (A) and (b) Bars are bundled together.

** = Alternate (a) and (b) Bars as shown in Detail A.

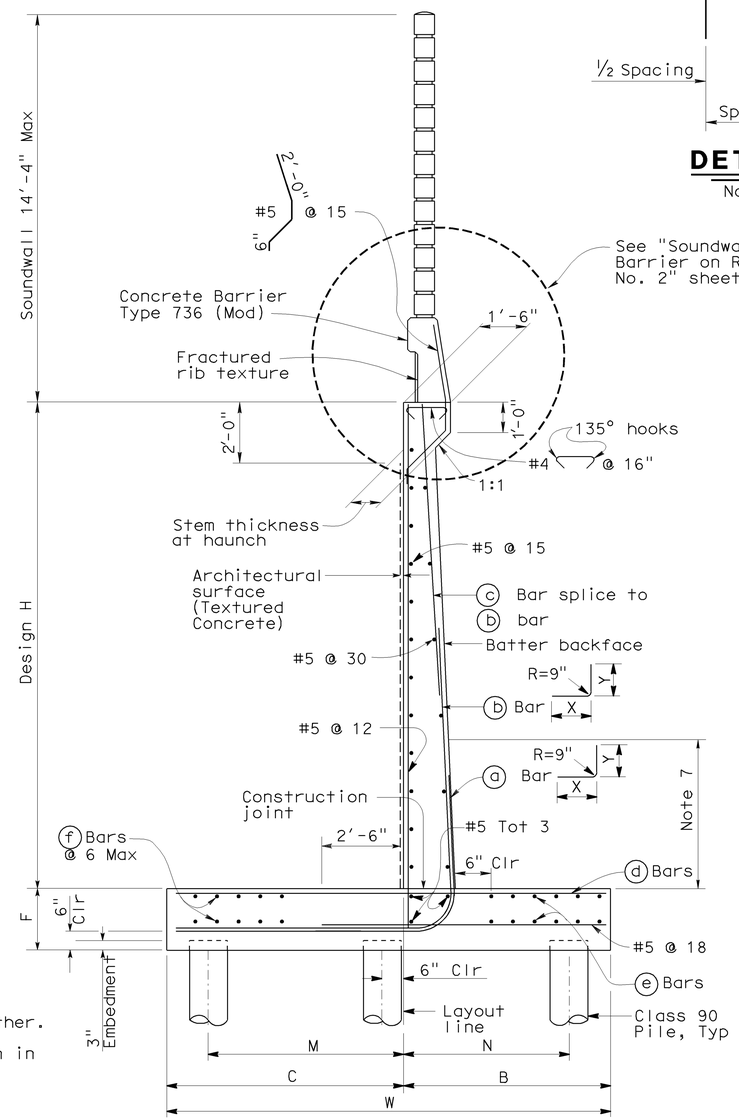

CLASS 90 PILE FOOTING SECTION

No Scale

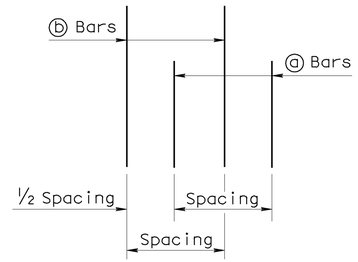

DETAIL B

No Scale

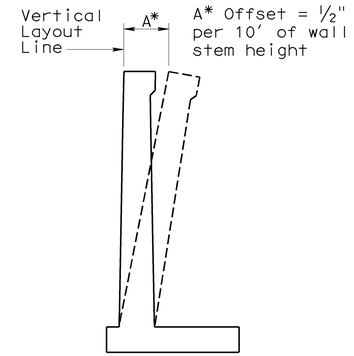

WALL OFFSET

No Scale

Values for offsetting forms to be determined by the Engineer.

GENERAL NOTES

1. Class 90 piles were used for the design.
2. Minimum distance between center pile and edge of footing is 1′-6".
3. Reduction factors:
   Groups A & B : Ø = 0.75
   Group C & x1: Ø = 1.0
4. Lateral resistance of each pile:
   Groups A & B : = 30 kip
   Group C & x1: = 40 kip
5. Maximum spacing between piles is shown in the table. reduce to suit the length of footing.
6. Minimum distance between any two piles is 4′-0".
7. Limit of no splicing for rebars = 3 times the bottom thickness of stem.
8. For soundwall and retaining wall architectural finish Or texture, see "Architectural Treatment Details" sheet.
9. For details not shown and drainage notes, see (B3-8).
10. Footing cover, 1′-6" minimum.
11. Placement of reinforcement:
    (B) & (C) bars are spliced together.
    * (A) & (B) bars are bundled together.
    ** Alternate (A) & (B) bars are shown in "Detail B".
    Cont = continuous.
12. For soundwall & barrier reinforcement, see "Soundwall Masonry Block on Barriers" sheets in Standard Plans.

DESIGN DATA

DESIGN: Load Factor Design (LFD)

CONCRETE: Reinforced Concrete, f′c = 3600 psi
fy = 60000 psi

LOADING CASE:

Level ground with 240 psf live load surcharge and 14′-4" soundwall.
Seismic Load = 0.57 Dead Load
Wind Load = 33 psf
Dead Load of Soundwall = 997 lb/lf
Dead Load of Barrier = 470 lb/lf

SEISMIC LOAD: SOIL

kh = 0.3g
kv = 0.0
kae : Mononobe-Okabe Method

SOIL: Ø = 34° γ = 120 pcf

Equivalent Fluid Pressure:
= 36 pcf for determination Of toe pressure
= 27 pcf for determination of heel pressure

LOAD COMBINATIONS:

Group A : βD+1.7E+1.7SC
Group B : βD+1.7E+1.7SC+W
Group C :
Stem : 1.0D+1.0E+1.0EQD+1.0EQE
Footing : D+PYM
Group x1: 1.3E+1.3SC+1.0CT

Where : β = 1.0 Or 1.3 Whichever controls Design
D = Dead Load
E = Lateral Earth Pressure
SC = Surcharge
W = Wind Load
EQD = Seismic Dead Load
EQE = Seismic Lateral Earth Pressure
PYM = Probable Yield Moment (1.3* nominal yield moment of stem)
CT = Truck Collision

DESIGN OVERSIGHT Jon Hamaguchi
11-24-09
SIGN OFF DATE

	BY	CHECKED
DESIGN	M. Atiqullah / E. Cutler	J. Powell
DETAILS	M. Atiqullah / E. Cutler	J. Powell
QUANTITIES	B. Ho	L. Ros

PREPARED FOR THE STATE OF CALIFORNIA DEPARTMENT OF TRANSPORTATION

Ayman Salama
PROJECT ENGINEER

BRIDGE NO. 55E0092
POST MILE 19.41

RETAINING WALL NO. 630
RETAINING WALL DETAILS No. 2

DISREGARD PRINTS BEARING EARLIER REVISION DATES
REVISION DATES (PRELIMINARY STAGE ONLY) 06/05/09 06/08/09

SHEET 9 OF 26

DESIGN DETAIL SHEET (ENGLISH) (REV. 2/25/05)

ORIGINAL SCALE IN INCHES FOR REDUCED PLANS 0 1 2 3

CU 12220
EA 0F0321

FILE => 55e0092-g-det02.dgn

USERNAME => bwright DATE PLOTTED => 25-JAN-2010 TIME PLOTTED => 13:43

DIST	COUNTY	ROUTE	POST MILES TOTAL PROJECT	SHEET No	TOTAL SHEETS
12	Ora	57	18.4/20.9	746	856

Milind Desai
REGISTERED CIVIL ENGINEER 06/08/09
DATE

1-25-10
PLANS APPROVAL DATE

REGISTERED PROFESSIONAL ENGINEER
MILIND R. DESAI
No. C51437
Exp. 6/30/10
CIVIL
STATE OF CALIFORNIA

The State of California or its officers or agents shall not be responsible for the accuracy or completeness of electronic copies of this plan sheet.

OCTA
550 S. MAIN STREET
ORANGE, CA 92863

CH2M HILL
6 HUTTON CENTRE DRIVE, SUITE 700
SANTA ANA, CA 92707

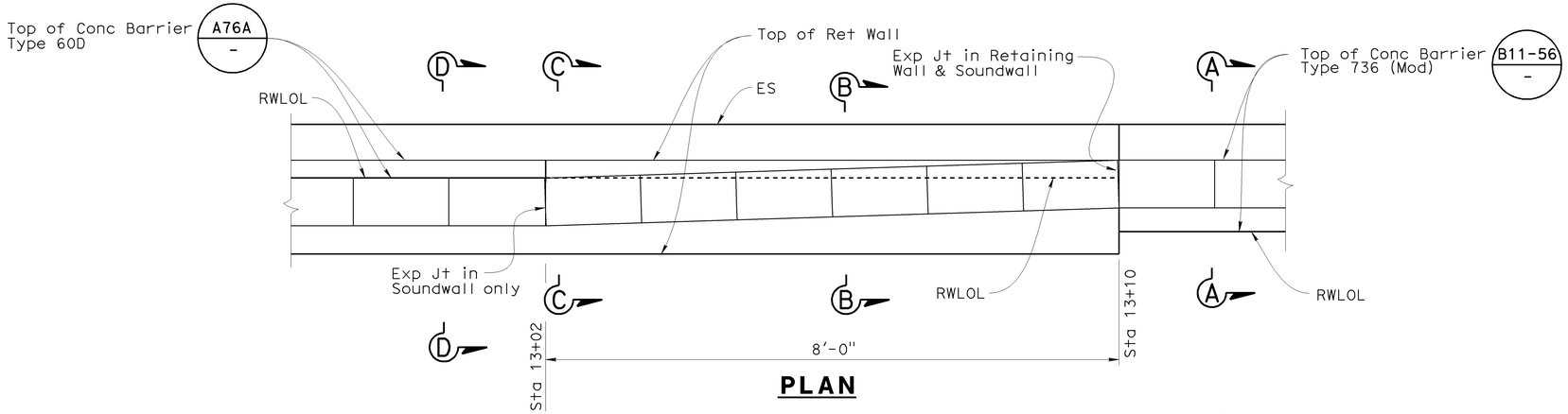

PLAN

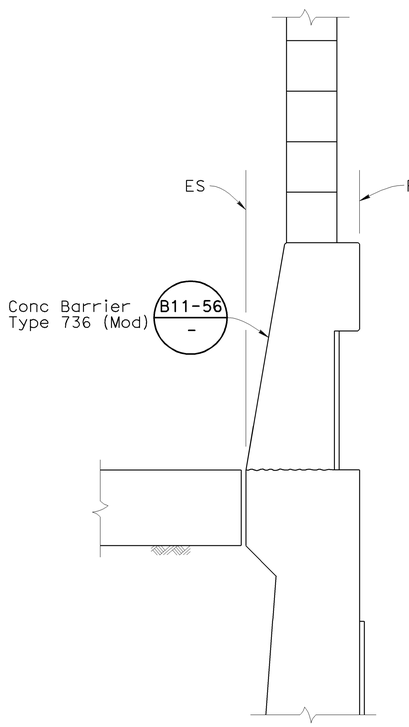

SECTION A-A

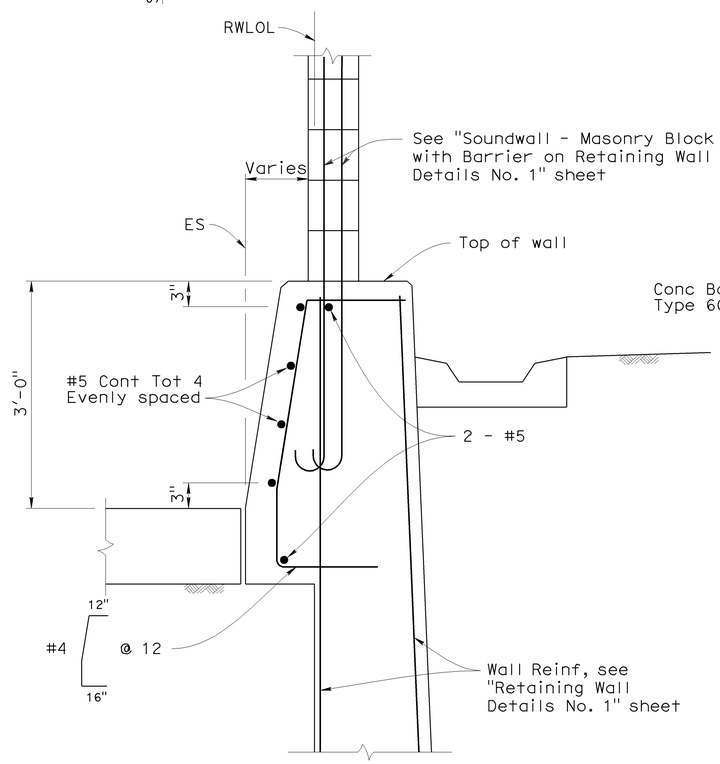

SECTION B-B

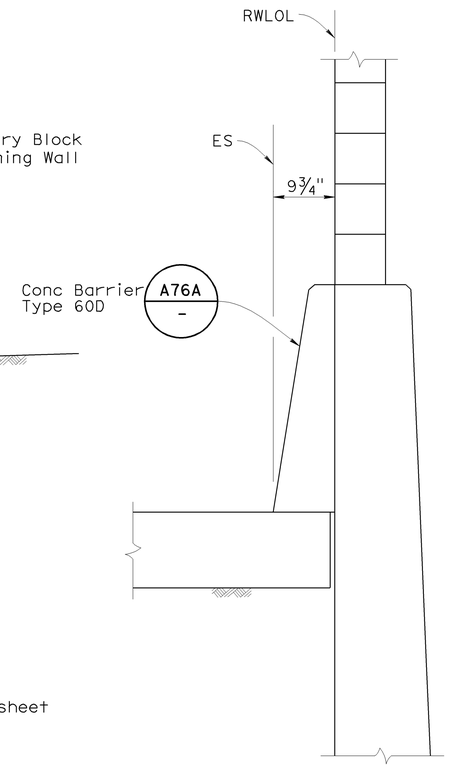

SECTION C-C

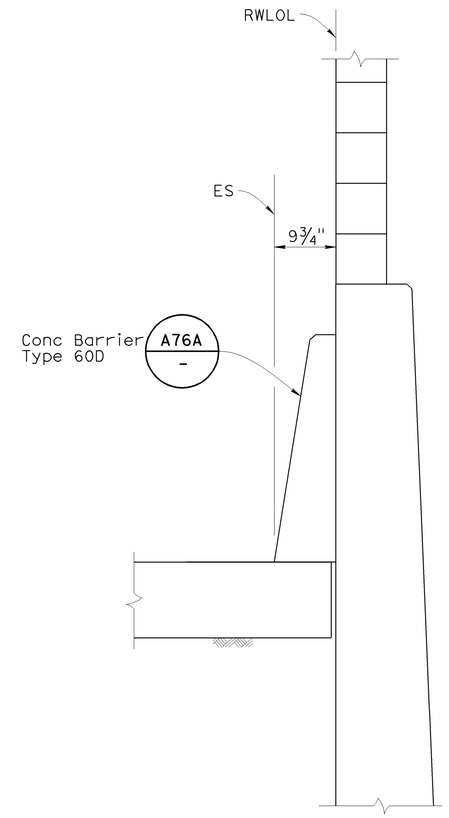

SECTION D-D

CONCRETE BARRIER TRANSITION DETAIL

1"=1'-0"

Jon Hamaguchi
DESIGN OVERSIGHT
11-24-09
SIGN OFF DATE

DESIGN DETAIL SHEET (ENGLISH) (REV. 2/25/05)

	BY	CHECKED
DESIGN	J. Elwood	D. Sun
DETAILS	P. Walker	D. Sun
QUANTITIES	B. Ho	L. Ros

ORIGINAL SCALE IN INCHES FOR REDUCED PLANS 0 1 2 3

PREPARED FOR THE STATE OF CALIFORNIA DEPARTMENT OF TRANSPORTATION

Ayman Salama
PROJECT ENGINEER

CU 12220
EA 0F0321

BRIDGE NO. 55E0092
POST MILE 19.41

RETAINING WALL NO. 630

CONCRETE BARRIER TRANSITION DETAILS

DISREGARD PRINTS BEARING EARLIER REVISION DATES

REVISION DATES (PRELIMINARY STAGE ONLY) 02/18/09 04/07/09 04/17/09 06/08/09

SHEET 10 OF 26

FILE => 55e0092-g-det03.dgn

USERNAME => trrright DATE PLOTTED => 25-JAN-2010 TIME PLOTTED => 13:43

DIST.	COUNTY	ROUTE	POST MILES TOTAL PROJECT	SHEET NO.	TOTAL SHEETS
12	Ora	57	18.4/20.9	747	856

Jennifer Elwood 06/08/09
REGISTERED ENGINEER - CIVIL DATE

1-25-10
PLANS APPROVAL DATE

REGISTERED PROFESSIONAL ENGINEER JENNIFER L. ELWOOD No. C64034 Exp. 9/30/10 CIVIL STATE OF CALIFORNIA

The State of California or its officers or agents shall not be responsible for the accuracy or completeness of electronic copies of this plan sheet.

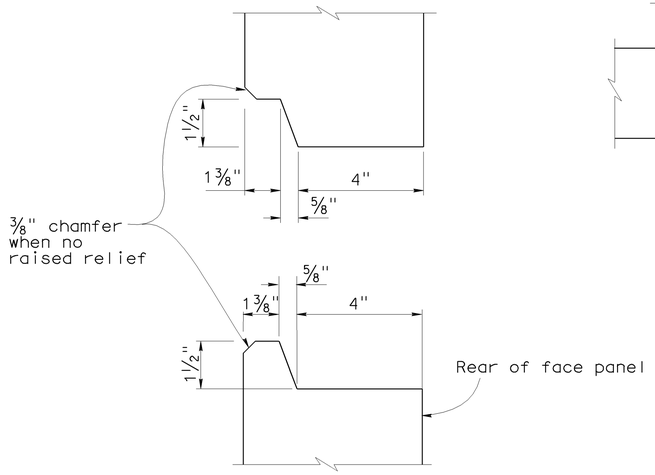

HORIZONTAL JOINT DETAIL
No Scale

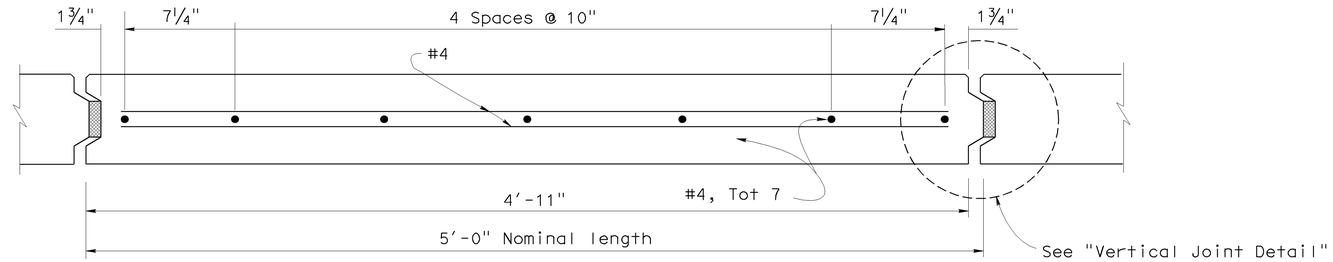

PLAN - FACE PANEL
No Scale

NOTES:

1. Architectural treatment not shown. Architectural Surface (Textured Concrete) extends beyond face of panel. See "Architectural Treatment Details" sheet.
2. Place reinforced elastomeric bearing pads in all of the panel joints between the panels. Place one in each vertical joint where the horizontal joint intersects it. Place two per panel in each horizontal joint.
   3/4" x 2 3/8" x 6" for vertical joints
   3/4" x 4" x 6" for horizontal joints. ⟨2⟩
3. Bond a strip of filter fabric, 1' - 0" wide, over the full length of all panel joints.

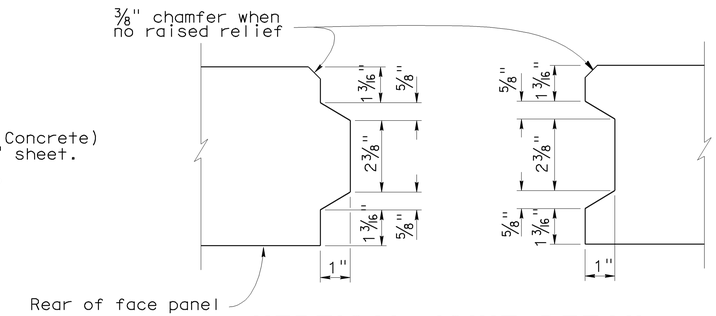

VERTICAL JOINT DETAIL
No Scale

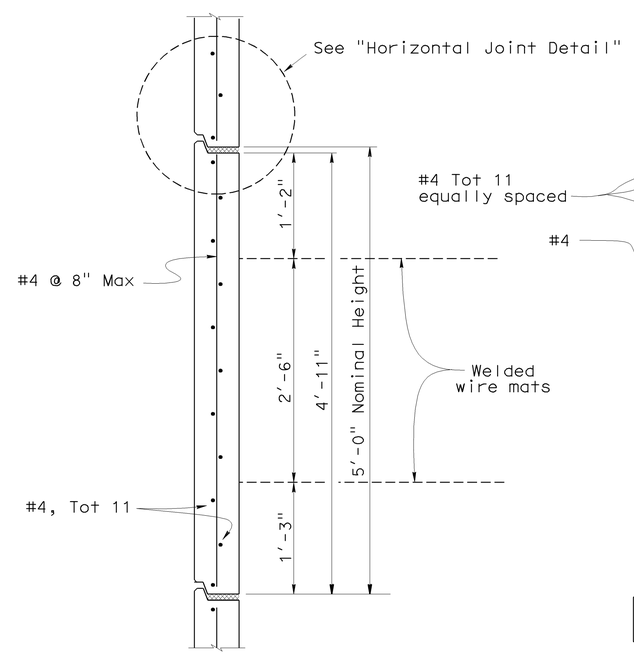

INTERMEDIATE PANEL
No Scale

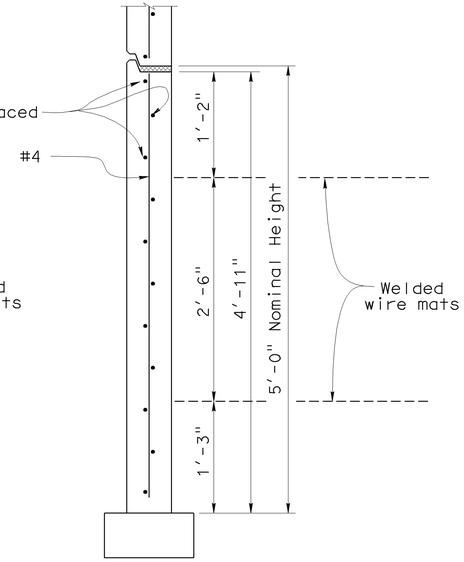

BOTTOM PANEL
No Scale

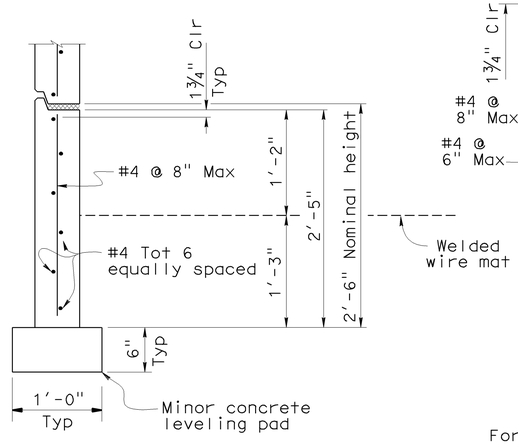

BOTTOM HALF PANEL
No Scale

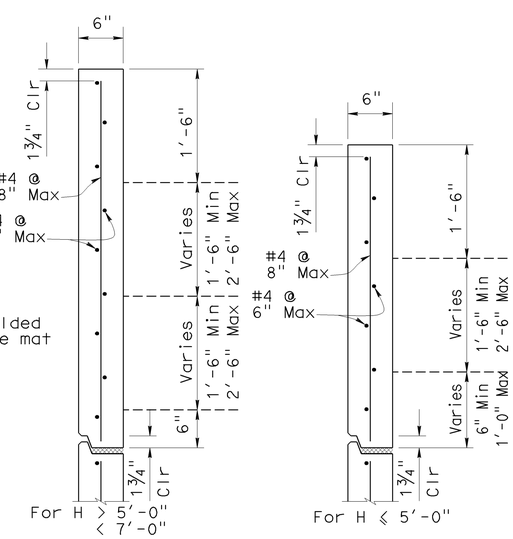

TOP PANEL
No Scale

⟨1⟩

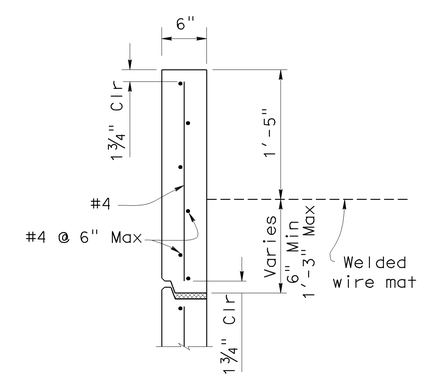

TOP HALF PANEL
No Scale

SPECIAL DETAILS

STANDARD DRAWING			
FILE NO. xs13-020-1e	APPROVED BY K. GRISWELL (RESPONSIBLE TECHNICAL SPECIALIST)	RELEASED BY ROBERTO LACALLE (RESPONSIBLE OFFICE CHIEF)	
	APPROVAL DATE 5-6-08	RELEASE DATE REVISED	

⟨1⟩ Added Top Panel Details
⟨2⟩ Revised Note

STATE OF CALIFORNIA DEPARTMENT OF TRANSPORTATION

DIVISION OF ENGINEERING SERVICES

BRIDGE NO. 55E0092
POST MILE 19.41

RETAINING WALL NO. 630
MECHANICALLY STABILIZED EMBANKMENT
DETAIL NO. 1

DS OSD 2147A (ENGLISH STANDARD DRAWING "XS" BORDER REV. 01/11/08)

ORIGINAL SCALE IN INCHES FOR REDUCED PLANS 0 1 2 3

CU 12220
EA 0F0321

DISREGARD PRINTS BEARING EARLIER REVISION DATES 02/18/09 04/07/09 04/17/09 06/08/09

REVISION DATES (PRELIMINARY STAGE ONLY)

SHEET 11 OF 26

USERNAME => trrichf

55e0092-g-msedt01.dgn

DATE PLOTTED => 25-JAN-2010 TIME PLOTTED => 13:43

DIST.	COUNTY	ROUTE	POST MILES TOTAL PROJECT	SHEET NO.	TOTAL SHEETS
12	Ora	57	18.4/20.9	748	856

Jennifer Elwood 06/08/09
REGISTERED ENGINEER - CIVIL DATE

1-25-10
PLANS APPROVAL DATE

REGISTERED PROFESSIONAL ENGINEER JENNIFER L. ELWOOD No. C64034 Exp. 9/30/10 CIVIL STATE OF CALIFORNIA

The State of California or its officers or agents shall not be responsible for the accuracy or completeness of electronic copies of this plan sheet.

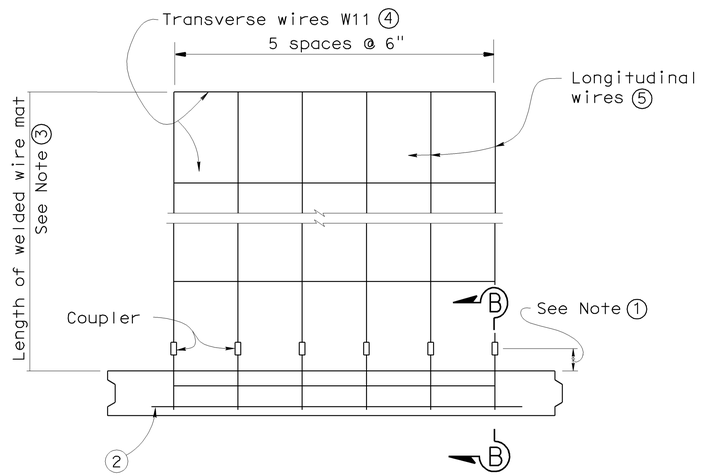

PLAN OF PANEL WITH WELDED WIRE MAT

No scale

GENERAL NOTES (MSE WALLS)

Live loading: Surcharge = 240 lb/ft^2

Soil parameters:

Internal design ϕ = 34°, γ = 120 lb/ft^3
External design ϕ(Backfill) = 34°, γ = 120 lb/ft^3
ϕ(Foundation) = 30°

Precast concrete panels:

f′c = 4,000 psi (Concrete compressive strength at 28 days)
fy = 60,000 psi (Yield strength of reinforcement)

Soil reinforcement:

Welded wire mats: fy = 65,000 psi (Yield strength)
Coupler: fy = 36,000 psi (Yield strength)
Corrosion rate = 1.1 mils/year

Reinforced concrete:

f′c = 3,600 psi, except as noted
(Concrete compressive strength at 28 days)

fy = 60,000 psi (Yield strength of reinforcement)

MSE = Mechanically stabilized embankment

NOTES:

① Distance as required to permit coupler to be swaged.

② Place #4 bar, 3′ - 2" long, centered on connector mat, but not welded to it.

③ Length equals "Base width" of wall, except it shall not be less than 16′ for the top 2 levels of mats at the top of the wall.

④ All Transverse Wires size W11 at various spacings as shown elsewhere in plans.

⑤ All Longitudinal Wires at 6" spacing, of various sizes, as shown elsewhere in plans.

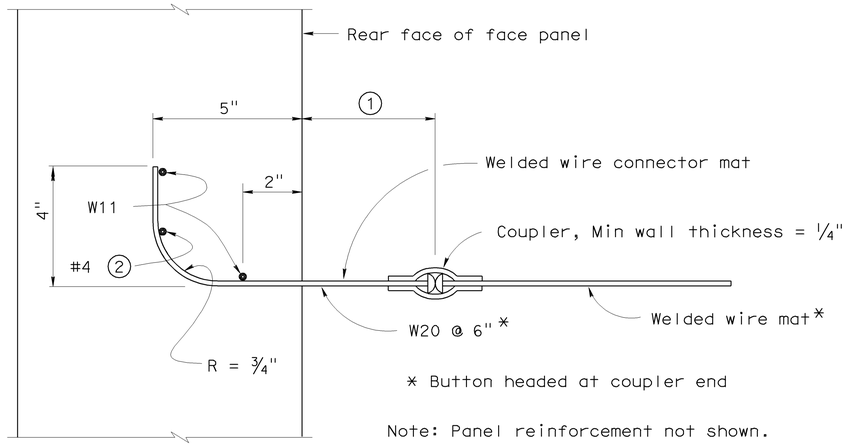

SECTION B-B

No scale

STANDARD DRAWING

FILE NO. xs13-020-2e

APPROVED BY K. GRISWELL
RESPONSIBLE TECHNICAL SPECIALIST
APPROVAL DATE 5-6-08

RELEASED BY ROBERTO LACALLE
RESPONSIBLE OFFICE CHIEF
RELEASE DATE 5-6-08

STATE OF CALIFORNIA DEPARTMENT OF TRANSPORTATION

DIVISION OF ENGINEERING SERVICES

BRIDGE NO. 55E0092
POST MILE 19.41

RETAINING WALL NO. 630
MECHANICALLY STABILIZED EMBANKMENT
DETAIL NO. 2

DS OSD 2147A (ENGLISH STANDARD DRAWING "XS" BORDER REV. 01/11/08)

ORIGINAL SCALE IN INCHES FOR REDUCED PLANS 0 1 2 3

CU 12220
EA 0F0321

DISREGARD PRINTS BEARING EARLIER REVISION DATES

REVISION DATES (PRELIMINARY STAGE ONLY) 02/18/09 04/07/09 04/17/09 06/08/09

SHEET 12 OF 26

USERNAME => trrichf

55e0092-g-msedt02.dgn

DATE PLOTTED => 25-JAN-2010 TIME PLOTTED => 13:43

DIST.	COUNTY	ROUTE	POST MILES TOTAL PROJECT	SHEET NO.	TOTAL SHEETS
12	Ora	57	18.4/20.9	749	856

Jennifer Elwood 06/08/09
REGISTERED ENGINEER - CIVIL DATE

1-25-10
PLANS APPROVAL DATE

REGISTERED PROFESSIONAL ENGINEER JENNIFER L. ELWOOD No. C64034 Exp. 9/30/10 CIVIL STATE OF CALIFORNIA

The State of California or its officers or agents shall not be responsible for the accuracy or completeness of electronic copies of this plan sheet.

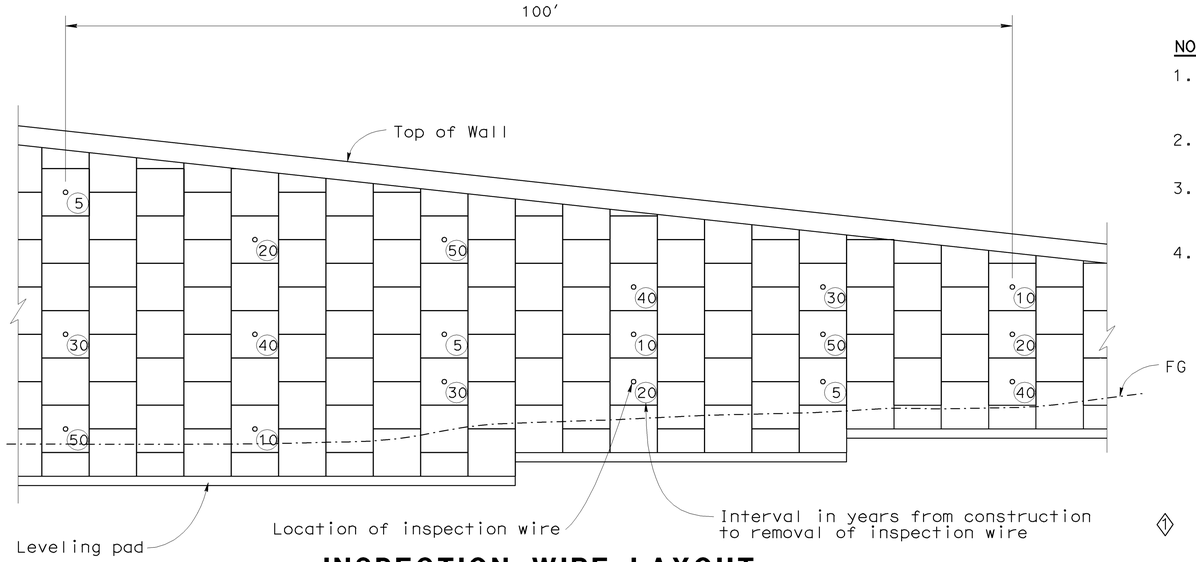

INSPECTION WIRE LAYOUT

No Scale

NOTES:

1. A set of 18 inspection wires is required for every MSE section of at least 100 feet long and a height equal to or greater than 17 feet.
2. Sets should be located approximately 500 feet apart, along the LOL.
3. Place wires in every fourth panel column along the LOL (20 feet apart) and number them according to the typical layout shown.
4. Walls which do not require a set of inspection wires based on the criteria in Note 1 shall have single level of inspection wires installed at a uniform spacing of 20 feet along this level. The location of this level shall be at the first panels above the base of the wall which will be fully exposed after completion of the wall. A minimum of 6 inspection wires shall be installed.

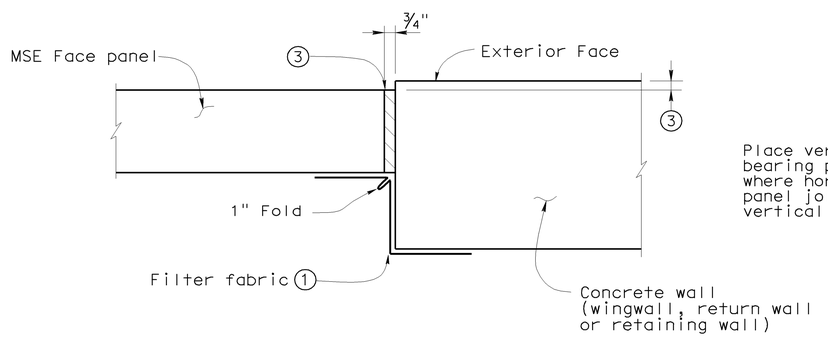

MSE FACE PANEL-TO-CONCRETE WALL JOINT DETAIL

No Scale

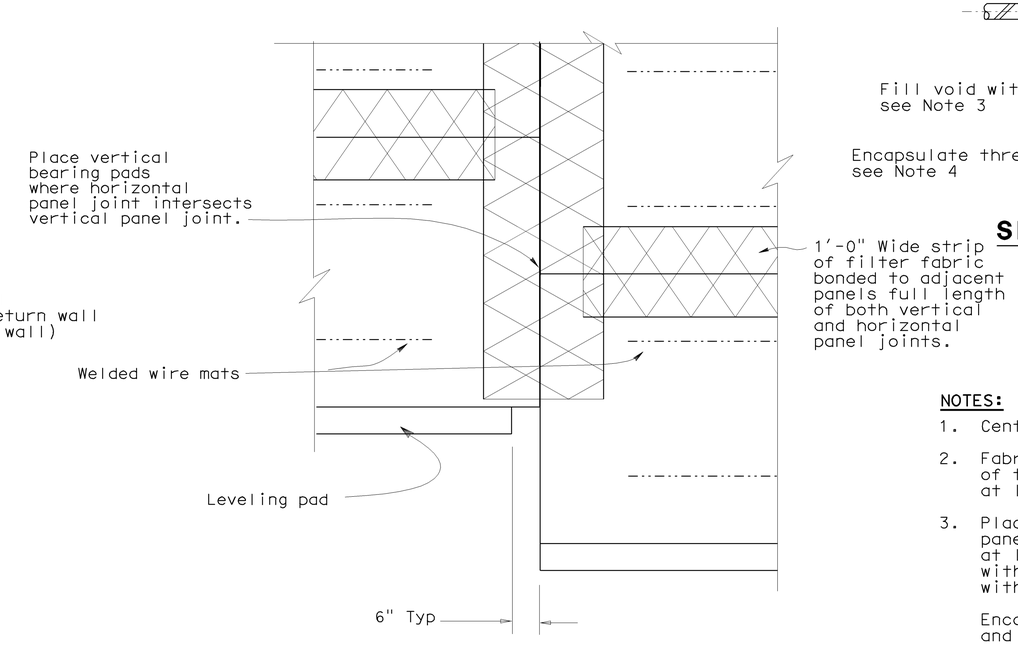

REAR ELEVATION

No Scale

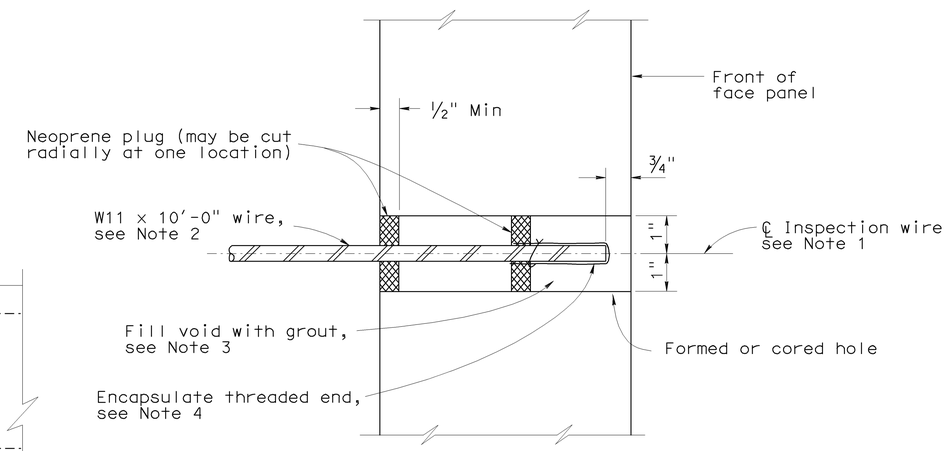

SECTION THRU INSPECTION WIRE

No Scale

LEGEND

1. Bond a strip of filter fabric, 1'-6" wide, to back of MSE panels and the adjacent concrete wall for entire length of vertical joint.
2. Bond expansion joint material to the concrete wall.
3. Offset between face of MSE face panel and face of the concrete wall as dictated by location of layout lines shown elsewhere in Project Plans.

NOTES:

1. Center inspection wire in face panel.
2. Fabricate inspection wires from W11 wire representative of the welded wire mats, with 3/8" dia - 16 UNC threads for at least 1 1/2" of one end.
3. Place inspection wire horizontal and perpendicular to the wall panel prior to backfilling. After backfill placement to a level at least 2'-0" above the inspection wire, dry pack opening with 1000 to 1500 psi mortar. Trowel mortar smooth and flush with face of panel.

   Encapsulate threaded end with corrosion inhibiting mastic, and secure round vinyl cover with nylon tie.
4. UNC = Unified coarse threads

SPECIAL DETAILS

RETAINING WALL NO. 630

MECHANICALLY STABILIZED EMBANKMENT

DETAIL NO. 3

STANDARD DRAWING

FILE NO. xs13-020-3e

APPROVED BY K. GRISWELL
RESPONSIBLE TECHNICAL SPECIALIST
APPROVAL DATE 5-6-08

RELEASED BY ROBERTO LACALLE
RESPONSIBLE OFFICE CHIEF
RELEASE DATE REVISED

1 Added Inspection Wire Layout & Notes from Bridge Design Aids 3-8

STATE OF CALIFORNIA DEPARTMENT OF TRANSPORTATION

DIVISION OF ENGINEERING SERVICES

BRIDGE NO. 55E0092
POST MILE 19.41

CU 12220
EA 0F0321

DS OSD 2147A (ENGLISH STANDARD DRAWING "XS" BORDER REV. 01/11/08)

ORIGINAL SCALE IN INCHES FOR REDUCED PLANS 0 1 2 3

DISREGARD PRINTS BEARING EARLIER REVISION DATES

REVISION DATES (PRELIMINARY STAGE ONLY) 02/18/09 04/07/09 04/17/09 06/08/09

SHEET 13 OF 26

USERNAME => trrichf

55e0092-g-msedt03.dgn

DATE PLOTTED => 25-JAN-2010 TIME PLOTTED => 13:43

DIST.	COUNTY	ROUTE	POST MILES TOTAL PROJECT	SHEET NO.	TOTAL SHEETS
12	Ora	57	18.4/20.9	750	856

Jennifer Elwood 06/08/09
REGISTERED ENGINEER - CIVIL DATE

1-25-10
PLANS APPROVAL DATE

REGISTERED PROFESSIONAL ENGINEER JENNIFER L. ELWOOD No. C64034 Exp. 9/30/10 CIVIL STATE OF CALIFORNIA

The State of California or its officers or agents shall not be responsible for the accuracy or completeness of electronic copies of this plan sheet.

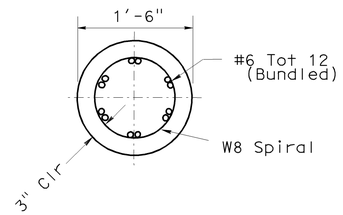

SECTION A-A
No Scale

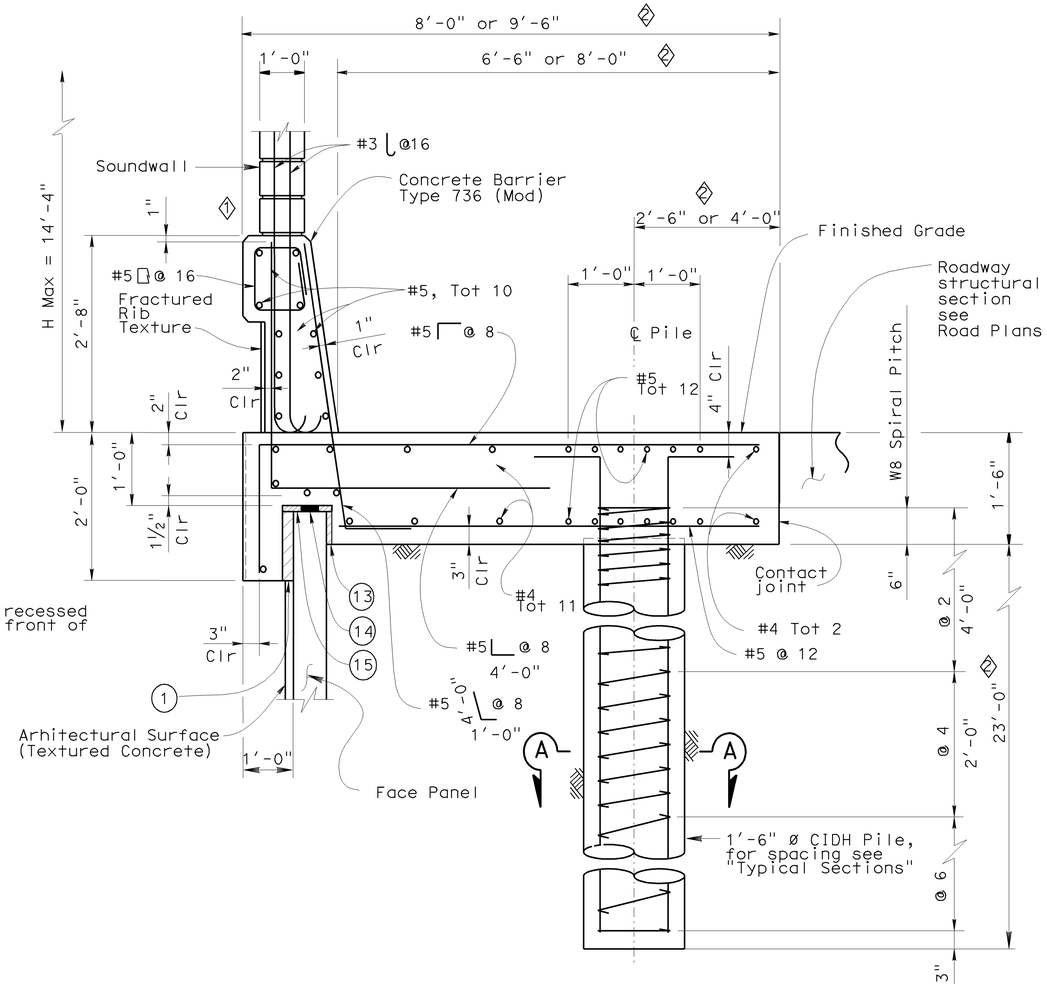

LEGEND

(1) 2" Expanded polystyrene recessed 2" into barrier slab at front of MSE face panel.

(13) 1" Expanded polystyrene.

(14) Five elastomeric bearing pads ¾" × 4" × 6" bonded to top of MSE face panel.

(15) 0.5" Expanded polystyrene.

SECTION AT TOP OF WALL WITH SOUNDWALL AND CONCRETE BARRIER
No Scale

SPECIAL DETAILS

RETAINING WALL NO. 630

MECHANICALLY STABILIZED EMBANKMENT

DETAIL NO. 5

STANDARD DRAWING

FILE NO. xs13-020-5e

APPROVED BY K. GRISWELL
RESPONSIBLE TECHNICAL SPECIALIST
APPROVAL DATE 5-6-08

RELEASED BY ROBERTO LACALLE
RESPONSIBLE OFFICE CHIEF
RELEASE DATE REVISED

1 Revised Barrier to (Type 736)
2 Revised Dimension & Detail
3 Removed Detail & Notes
4 Removed Notes (2) through (12)

STATE OF CALIFORNIA
DEPARTMENT OF TRANSPORTATION

DIVISION OF ENGINEERING SERVICES

BRIDGE NO. 55E0092
POST MILE 19.41

CU 12220
EA 0F0321

DISREGARD PRINTS BEARING EARLIER REVISION DATES 02/14/09 04/07/09 04/17/09 06/08/09

SHEET 14 OF 26

DS OSD 2147A (ENGLISH STANDARD DRAWING "XS" BORDER REV. 01/11/08)

ORIGINAL SCALE IN INCHES FOR REDUCED PLANS 0 1 2 3

USERNAME => trrichf

DATE PLOTTED => 25-JAN-2010 TIME PLOTTED => 13:43

55e0092-g-msedt05.dgn

DIST.	COUNTY	ROUTE	POST MILES TOTAL PROJECT	SHEET NO.	TOTAL SHEETS
12	Ora	57	18.4/20.9	751	856

REGISTERED ENGINEER - CIVIL DATE 06/08/09

1-25-10
PLANS APPROVAL DATE

REGISTERED PROFESSIONAL ENGINEER JENNIFER L. ELWOOD No. C64034 Exp. 9/30/10 CIVIL STATE OF CALIFORNIA

The State of California or its officers or agents shall not be responsible for the accuracy or completeness of electronic copies of this plan sheet.

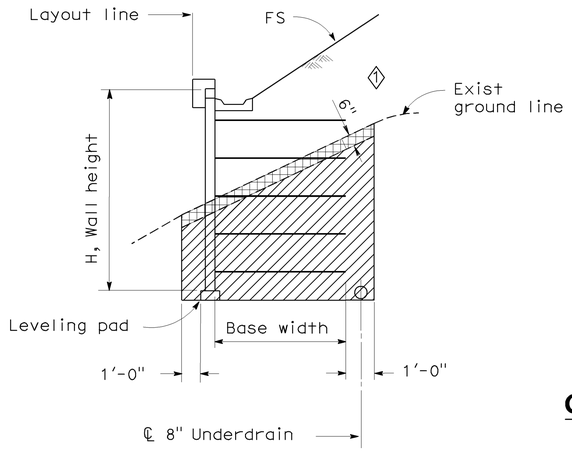

LIMITS OF EXCAVATION

No Scale

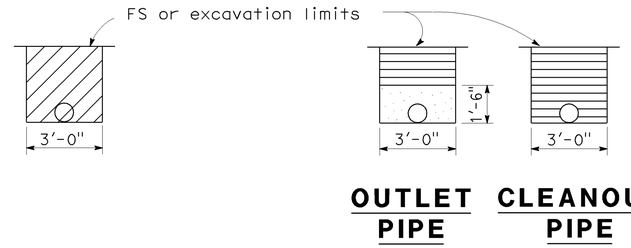

OUTLET OR CLEANOUT PIPE FOR UNDERDRAIN

No Scale

ABBREVIATIONS

OG	Original ground
FS	Planned finished surface
GP	Planned grading plane

LEGEND

- Limits of structure excavation
- Limits of structure backfill
- Limits of permeable material
- ◇2 Indicates Structure Excavation (Type Y-1) (Aerially Deposited Lead)

NOTES:

1. Limits to FS except to GP when in roadway section.
2. Locate 8" perforated underdrain below bottom level of welded wire mats.
3. Maximum spacing of outlet pipes is 200 ft.
4. At sags in profile of underdrain, install outlet pipe for each direction of flow.

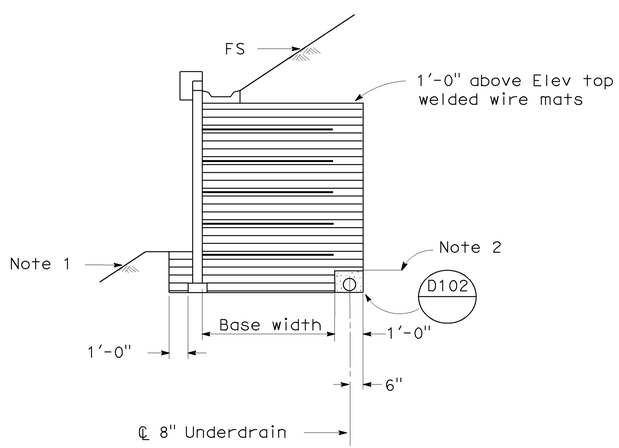

SLOPING FINISHED SURFACE

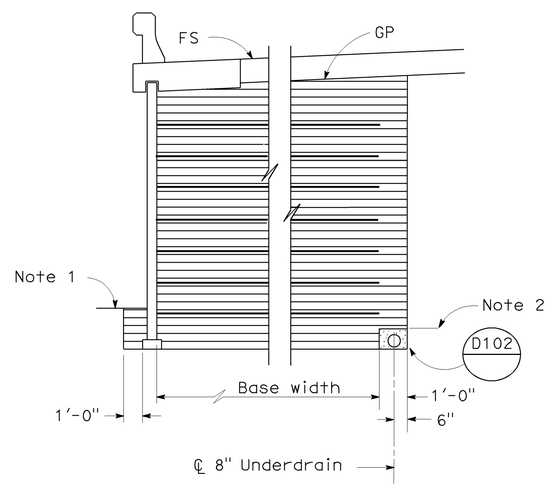

ROADWAY SECTION WITH BASE WIDTH 16' OR GREATER

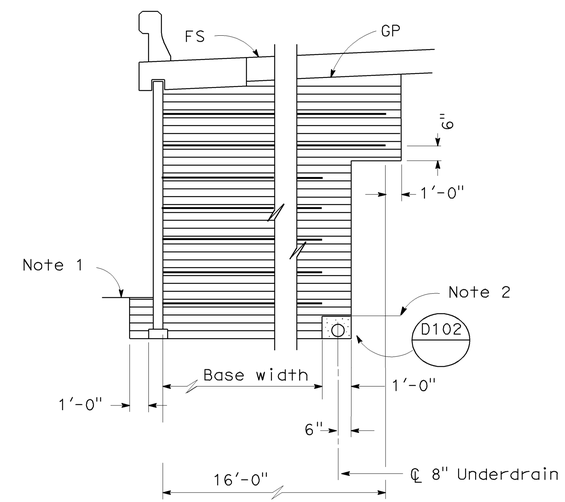

ROADWAY SECTION WITH BASE WIDTH LESS THAN 16'

LIMITS OF BACKFILL

No Scale

SPECIAL DETAILS

RETAINING WALL NO. 630

MECHANICALLY STABILIZED EMBANKMENT

DETAIL NO. 6

STANDARD DRAWING

FILE NO. xs13-020-6e

APPROVED BY K. GRISWELL — RESPONSIBLE TECHNICAL SPECIALIST
APPROVAL DATE 5-6-08

RELEASED BY ROBERTO LACALLE — RESPONSIBLE OFFICE CHIEF
RELEASE DATE REVISED

◇1 Added Limits of ADL Excavation
◇2 Added ADL Excavation Legend

STATE OF CALIFORNIA DEPARTMENT OF TRANSPORTATION

DIVISION OF ENGINEERING SERVICES

BRIDGE NO. 55E0092
POST MILE 19.41

DS OSD 2147A (ENGLISH STANDARD DRAWING "XS" BORDER REV. 01/11/08)

ORIGINAL SCALE IN INCHES FOR REDUCED PLANS 0 1 2 3

CU 12220
EA 0F0321

DISREGARD PRINTS BEARING EARLIER REVISION DATES

REVISION DATES (PRELIMINARY STAGE ONLY) 02/18/09 04/07/09 04/17/09 06/08/09

SHEET 15 OF 26

USERNAME => trcarol

55e0092-g-msedt06.dgn

DATE PLOTTED => 25-JAN-2010 TIME PLOTTED => 13:29

DIST	COUNTY	ROUTE	POST MILES TOTAL PROJECT	SHEET No	TOTAL SHEETS
12	Ora	57	18.4/20.9	752	856

REGISTERED CIVIL ENGINEER 06/08/09 DATE

1-25-10
PLANS APPROVAL DATE

REGISTERED PROFESSIONAL ENGINEER MOHAMMED ATIQULLAH No. C47027 Exp. 12/31/09 CIVIL STATE OF CALIFORNIA

The State of California or its officers or agents shall not be responsible for the accuracy or completeness of electronic copies of this plan sheet.

OCTA
550 S. MAIN STREET
ORANGE, CA 92863

CH2M HILL
6 HUTTON CENTRE DRIVE, SUITE 700
SANTA ANA, CA 92707

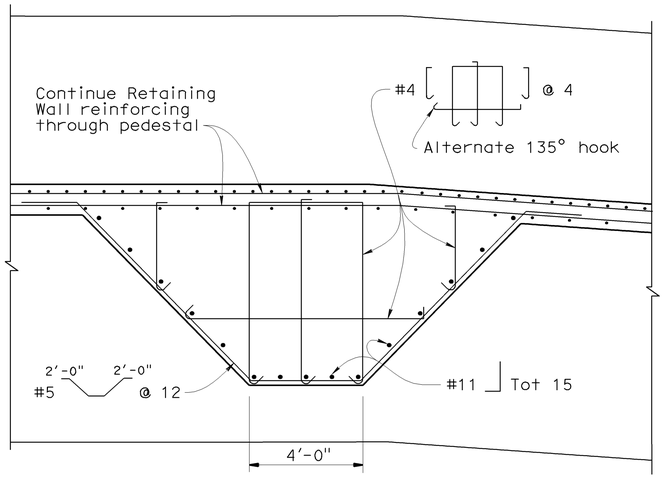

SECTION B-B
3/8"=1'-0"

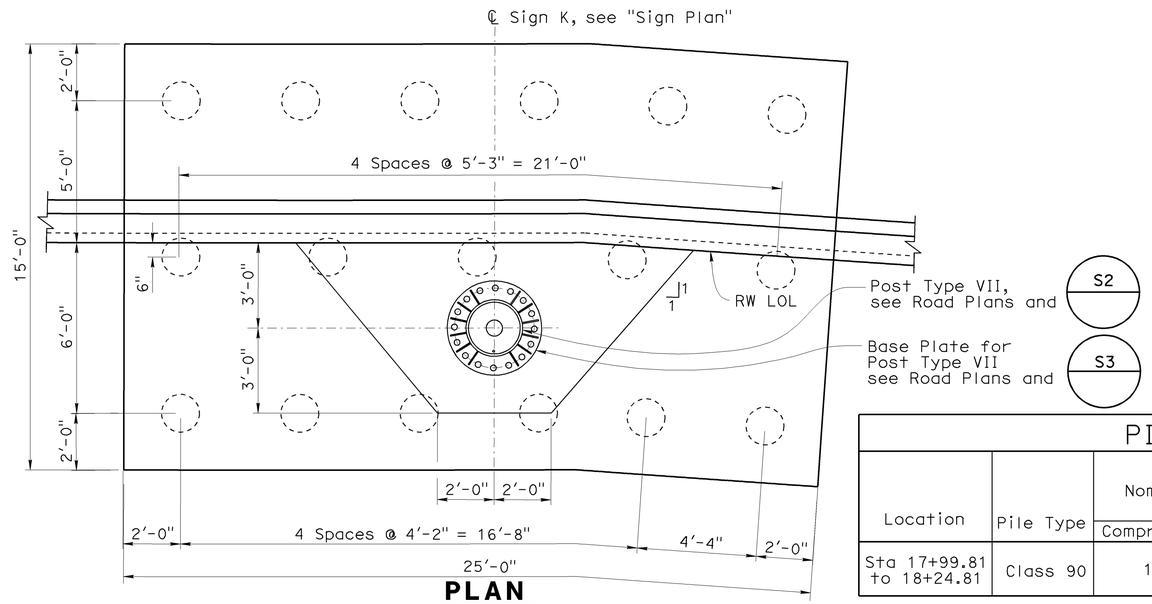

PLAN
3/8"=1'-0"

PILE DATA TABLE						
Location	Pile Type	Nominal Resistance (kips)		Design Tip Elevation (ft)	Specified Tip Elevation (ft)	Nominal Driving Resistance (kips)
		Compression	Tension			
Sta 17+99.81 to 18+24.81	Class 90	180	0	277.00(a) 277.00(c) 292.38(d)	277.00	180

Design Tip Elevation is controlled by following demand:
(a) Compression; (c) Settlement; (d) Lateral Capacity

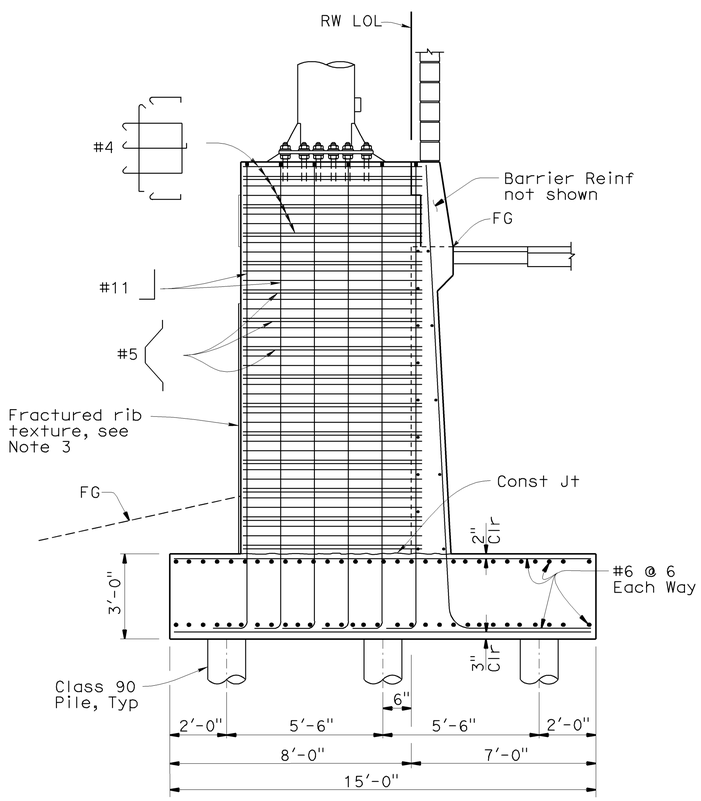

SECTION A-A
3/8"=1'-0"

Note:
Soundwall vertical reinforcement not shown.

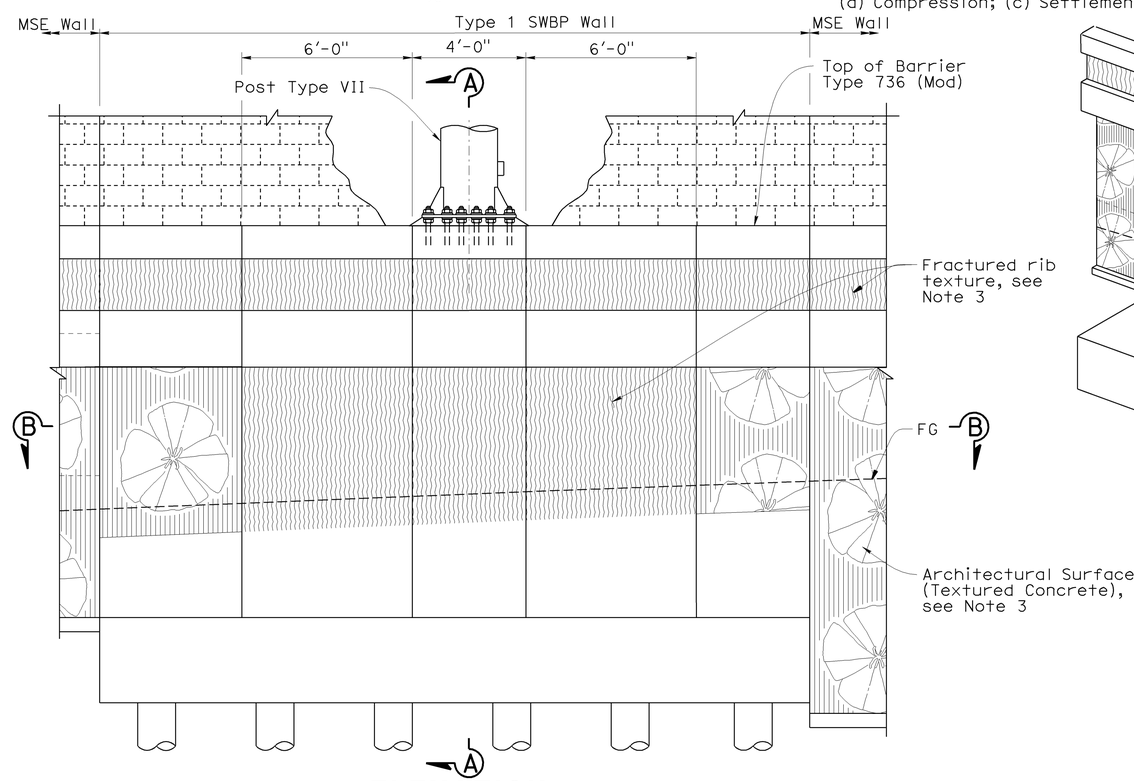

ELEVATION
3/8"=1'-0"

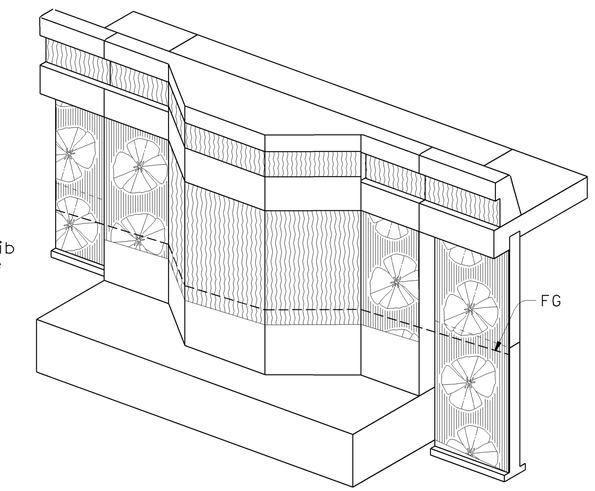

ISOMETRIC VIEW
No Scale

NOTES:

1. For information not shown, see "Typical Sections" and "Retaining Wall Details No. 2" sheets.
2. Reinforcement shown on Sections A-A and B-B shall only apply at overhead sign foundation. All other reinforcement, see "Retaining Wall Details No. 2" sheet.
3. For Fractured Rib Texture and Architectural Surface (Textured Concrete) details, see "Architectural Treatment Details" sheet.

DESIGN OVERSIGHT Jon Hamaguchi
11-24-09
SIGN OFF DATE

	BY	CHECKED
DESIGN	M. Atiqullah / E. Cutler	J. Powell
DETAILS	M. Atiqullah / E. Cutler	J. Powell
QUANTITIES	B. Ho	L. Ros

PREPARED FOR THE STATE OF CALIFORNIA DEPARTMENT OF TRANSPORTATION

Ayman Salama
PROJECT ENGINEER

BRIDGE NO. 55E0092
POST MILE 19.41

RETAINING WALL NO. 630
OVERHEAD SIGN PEDESTAL DETAILS

DESIGN DETAIL SHEET (ENGLISH) (REV. 2/25/05)

ORIGINAL SCALE IN INCHES FOR REDUCED PLANS 0 1 2 3

CU 12220
EA 0F0321

DISREGARD PRINTS BEARING EARLIER REVISION DATES

REVISION DATES (PRELIMINARY STAGE ONLY) 02/18/09 04/07/09 04/17/09 06/08/09

SHEET 16 OF 26

FILE => 55e0092-g-os_dt01.dgn

USERNAME => trcarol DATE PLOTTED => 25-JAN-2010 TIME PLOTTED => 13:29

DIST.	COUNTY	ROUTE	POST MILES TOTAL PROJECT	SHEET NO.	TOTAL SHEETS
12	Ora	57	18.4/20.9	753	856

REGISTERED ENGINEER - CIVIL DATE 06/08/09

1-25-10
PLANS APPROVAL DATE

REGISTERED PROFESSIONAL ENGINEER JENNIFER L. ELWOOD No. C64034 Exp. 9/30/10 CIVIL STATE OF CALIFORNIA

The State of California or its officers or agents shall not be responsible for the accuracy or completeness of electronic copies of this plan sheet.

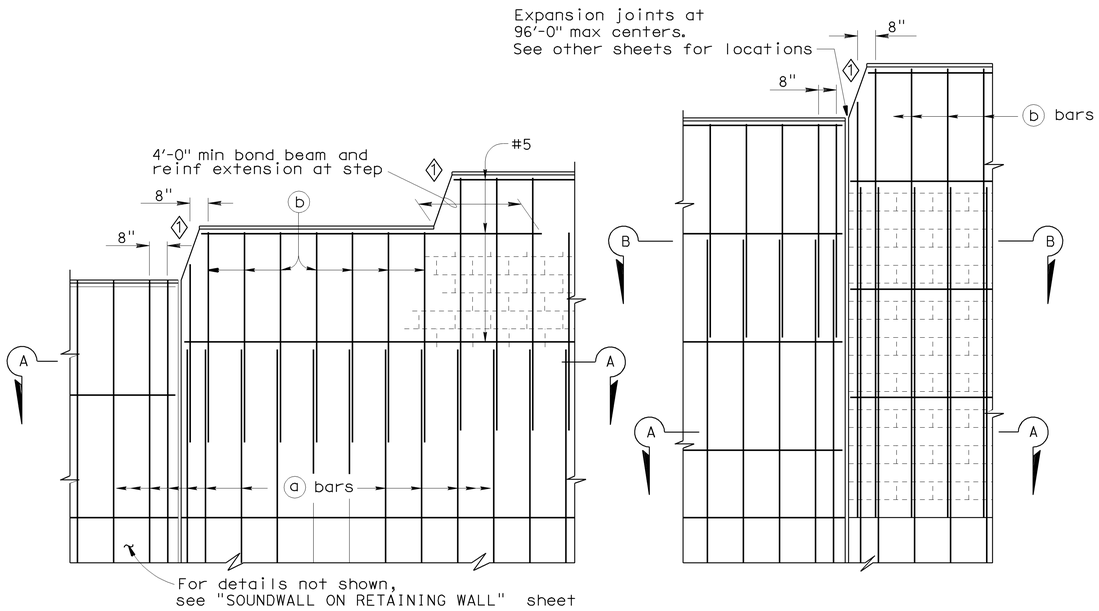

PART ELEVATIONS

No Scale

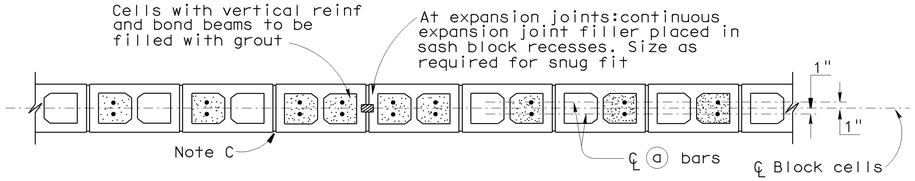

SECTION A-A

For details not shown,see other details

H=6'-0" THRU H=12'-0"

No Scale

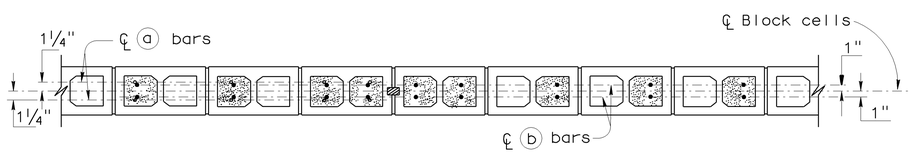

SECTION A-A SECTION B-B

For details not shown,see other details

H=12'-0" THRU H=16'-0"

No Scale

DESIGN NOTES

DESIGN

Uniform Building Code,1997 Edition and the Bridge Design Specifications.

DESIGN WIND LOAD

33 psf

DESIGN SEISMIC LOAD

0.57 Dead load

REINFORCED CONCRETE

f'c = 3.250 ksi
fy = 60 ksi

CONCRETE MASONRY

REGULAR STRENGTH	HIGH STRENGTH	
f'm = 1500 psi	f'm = 2000 psi	f'm = 2500 psi
f_b = 495 psi	f_b = 660 psi	f_b = 830 psi
fs = 24000 psi	fs = 24000 psi	fs = 24000 psi
n = 25.8	n = 19.3	n = 15.5

LOAD FACTORS AND LOAD COMBINATIONS

Working Stress Design (WSD) Percentage of unit stress

Group 1: D + E + SC 100%
Group 2: D + W + SC + E 100%
Group 3: D + 0.71 EQD + E 100%

Where:

D = Dead load
E = Lateral earth pressure
SC = Live load surcharge
W = Wind load
EQD = Seismic dead load

Load Factor Design (LFD)

Group A: βD +1.7 E + 1.7 SC
Group B: βD +1.7 E + 1.3 W
Group C: βD +1.3 E + 1.0 EQE
Group D: βD +1.3 E + 1.0 EQD
Group E: βD +1.1 E + 0.85 (EQE + EQD)

Where : β = 0.9 or 1.2, whichever controls in design
D = Dead load
E = Lateral earth pressure
SC = Live load surcharge
W = Wind load
EQD = Seismic dead load
EQE = Seismic earth load

STRENGTH REDUCTION FACTORS, Ø

Reinforced concrete:
For flexure ——— Ø=0.90
For shear ——— Ø=0.85

Concrete masonry:
For flexure ——— Ø=0.80
For shear ——— Ø=0.60

Foundations:
See "RETAINING WALL WITH SOUNDWALL" sheets

GENERAL NOTES

Note A: For type of block and joint finish, See other sheets.

Note B: When blocks are laid in stacked bond, ladder type, galvanized joint reinforcement shall be provided. A minimum of 2 - 9 gauge wires continuous at 4'-0" maximum to be used. Locate reinforcement in joints that are at the approximate midpoint between bond beams.

Note C: Horizontal joints shall be tooled concave or may be weathered.
Vertical joints shall be tooled concave or may be raked.

Note D: For intermediate wall heights that are between the "H's" given. Use the tabular information for the next higher "H".

Note E: Masonry strengths are listed in the "SOUNDWALL REINFORCEMENT TABLE".

SOUNDWALL REINFORCEMENT TABLE

Maximum H	a bars @ 406 max	b bars @ 406 max	"y"	f'm (psi)	Compressive Strength of CMU (psi)	Maximum H
6'-0"	#4	———	———	1500	1.9	6'-0"
8'-0"	#4	———	———	1500	1900	8'-0"
10'-0"	#4	———	———	1500	1900	10'-0"
12'-0"	#5	#4	6'-0"	2000	2800	12'-0"
14'-0"	#6	#4	8'-0"	2500	3750	14'-0"
16'-0"	#6	#4	10'-0"	2500	3750	16'-0"

SPECIAL DETAILS

RETAINING WALL NO. 630

SOUNDWALL ON RETAINING WALL-MASONRY BLOCK

DETAILS NO. 1

STANDARD DRAWING

FILE NO. xs15-120-1e Revised

APPROVED BY T SATTER — RESPONSIBLE TECHNICAL SPECIALIST
APPROVAL DATE 4-15-08

RELEASED BY ROBERTO LACALLE — RESPONSIBLE OFFICE CHIEF
RELEASE DATE REVISED

1 Revised Step

STATE OF CALIFORNIA DEPARTMENT OF TRANSPORTATION

DIVISION OF ENGINEERING SERVICES

BRIDGE NO. 55E0092
POST MILE 19.41

CU 12220
EA 0F0321

DS OSD 2147A (ENGLISH STANDARD DRAWING "XS" BORDER REV. 01/11/08)

ORIGINAL SCALE IN INCHES FOR REDUCED PLANS 0 1 2 3

DISREGARD PRINTS BEARING EARLIER REVISION DATES

REVISION DATES (PRELIMINARY STAGE ONLY) 02/18/09 04/07/09 04/17/09 06/08/09

SHEET 17 OF 26

USERNAME => trcarol

55e0092-g-RWSWdet01.dg

DATE PLOTTED => 25-JAN-2010 TIME PLOTTED => 13:29

DIST.	COUNTY	ROUTE	POST MILES TOTAL PROJECT	SHEET NO.	TOTAL SHEETS
12	Ora	57	18.4/20.9	754	856

Jennifer Elwood 06/08/09
REGISTERED ENGINEER - CIVIL DATE

1-25-10
PLANS APPROVAL DATE

REGISTERED PROFESSIONAL ENGINEER
JENNIFER L. ELWOOD
No. C64034
Exp. 9/30/10
CIVIL
STATE OF CALIFORNIA

The State of California or its officers or agents shall not be responsible for the accuracy or completeness of electronic copies of this plan sheet.

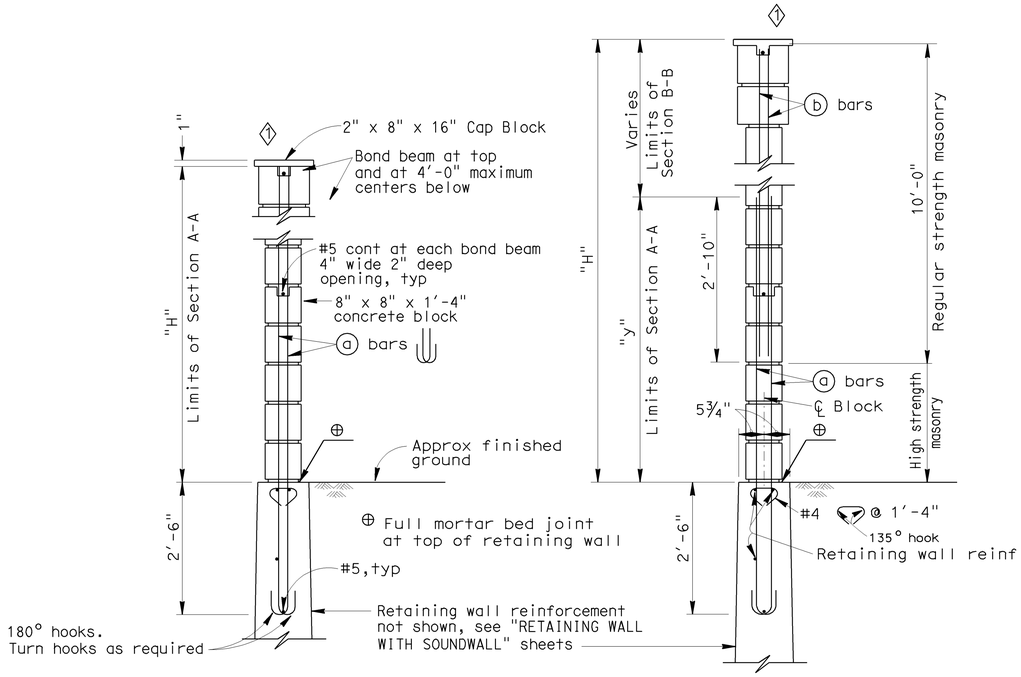

H=6'-0" THRU H=10'-0"

For details not shown, see H=12'-0" thru H=16'-0"

H=12'-0" THRU H=16'-0"

For details not shown, see H=6'-0" thru H=10'-0"

TYPICAL SECTIONS

No Scale

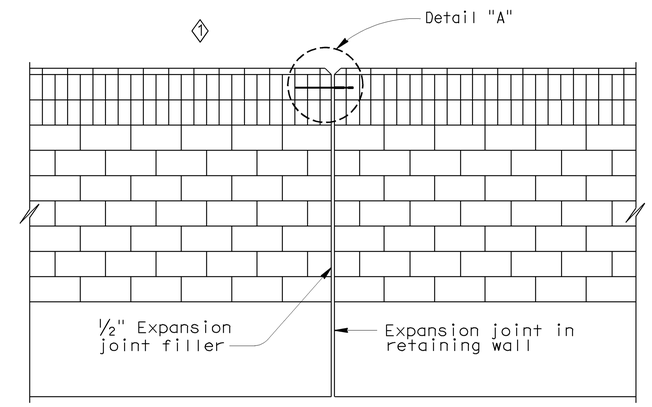

ALIGNMENT KEY DETAIL

No Scale

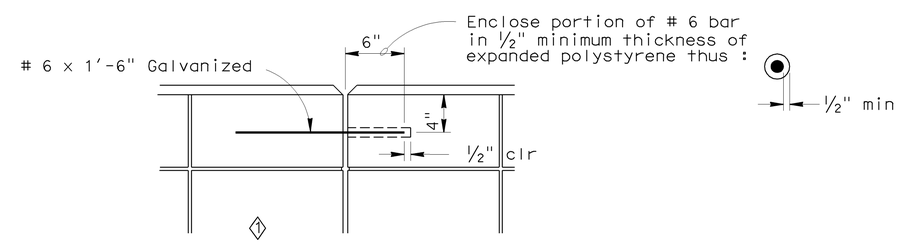

DETAIL A

No Scale

SPECIAL DETAILS

RETAINING WALL NO. 630

SOUNDWALL ON RETAINING WALL-MASONRY BLOCK

DETAILS NO. 2

STANDARD DRAWING

FILE NO. xs15-120-2e Revised

APPROVED BY T SATTER — RESPONSIBLE TECHNICAL SPECIALIST
APPROVAL DATE 4-15-08

RELEASED BY ROBERTO LACALLE — RESPONSIBLE OFFICE CHIEF
RELEASE DATE 4-15-08 REVISED

1 Revised Cap Blocks

STATE OF CALIFORNIA
DEPARTMENT OF TRANSPORTATION

DIVISION OF ENGINEERING SERVICES

BRIDGE NO. 55E0092
POST MILE 19.41

DS OSD 2147A (ENGLISH STANDARD DRAWING "XS" BORDER REV. 01/11/08)

ORIGINAL SCALE IN INCHES FOR REDUCED PLANS 0 1 2 3

CU 12220
EA 0F0321

DISREGARD PRINTS BEARING EARLIER REVISION DATES

REVISION DATES (PRELIMINARY STAGE ONLY) 02/18/09 04/07/09 04/17/09 06/08/09

SHEET 18 OF 26

USERNAME => trcarol

55e0092-g-RWSWdet02.dgn

DATE PLOTTED => 25-JAN-2010 TIME PLOTTED => 13:29

DIST.	COUNTY	ROUTE	POST MILES TOTAL PROJECT	SHEET NO.	TOTAL SHEETS
12	Ora	57	18.4/20.9	755	856

REGISTERED ENGINEER - CIVIL DATE 06/08/09

1-25-10
PLANS APPROVAL DATE

REGISTERED PROFESSIONAL ENGINEER JENNIFER L. ELWOOD No. C64034 Exp. 9/30/10 CIVIL STATE OF CALIFORNIA

The State of California or its officers or agents shall not be responsible for the accuracy or completeness of electronic copies of this plan sheet.

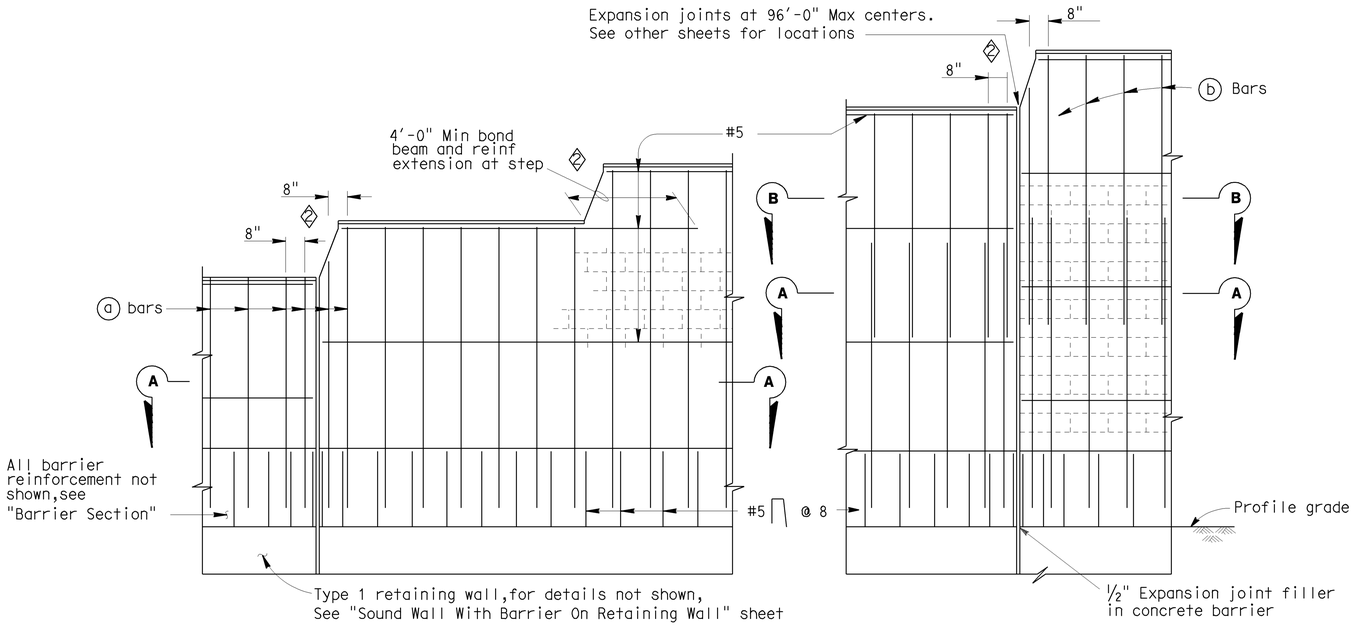

PART ELEVATIONS

No Scale

SOUNDWALL REINFORCEMENT TABLE

Maximum H	(a) Bars @ 1'-4" Max	(B) bars @ 1'-4" Max	"y"	f'm (KSI)	Compressive Strength of CMU (KSI)	Maximum H
6'-4"	# 4	———	———	1.5	1.9	6'-4"
8'-4"	# 4	———	———	1.5	1.9	8'-4"
10'-4"	# 4	———	———	1.5	1.9	10'-4"
12'-4"	# 5	# 4	5'-0"	1.5	1.9	12'-4"
14'-4"	# 6	# 4	7'-0"	1.5	1.9	14'-4"
16'-4"	# 6	# 4	9'-0"	2.5	3.7	16'-4"

Note I : For details not shown,see "Sound Wall With Barrier On Retaining Wall - Masonry Block - Details No.2" sheet.

Note II : Slope ground at traffic side of barrier to drain. Maximum slope ±10%.

GENERAL NOTES

Note A: For type of block and joint finish, see other sheets.

Note B: When blocks are laid in stacked bond, ladder type, galvanized joint reinforcement shall be provided. A minimum of 2-9 gauge wire continuous at 4'-0" maximum to be used. Locate reinforcement in joints that are at the approximate midpoint between bond beams.

Note C: Horizontal joints shall be tooled concave or may be weathered.
Vertical joints shall be tooled concave or may be raked.

Note D: For intermediate wall heights that are between the "H's" given. Use the tabular information for the next higher "H".

Note E: Masonry strengths are listed in "SOUNDWALL REINFORCEMENT TABLE".

Note F: Class 2 concrete to be used for the barrier.

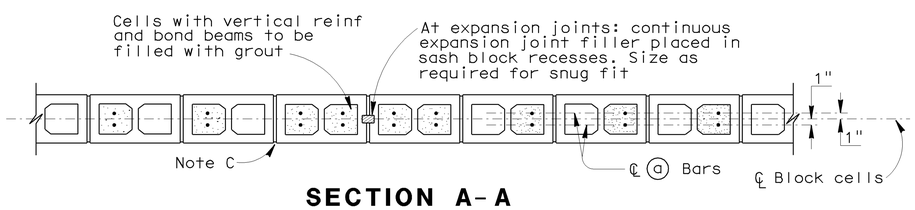

SECTION A-A

For details not shown,see other details

H=6'-4" THRU H=10'-4"

No Scale

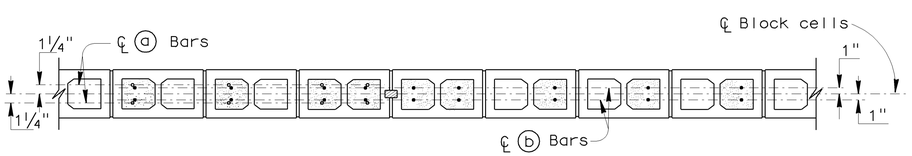

SECTION A-A

SECTION B-B

For details not shown,see other details

H=12'-4" THRU H=16'-4"

No Scale

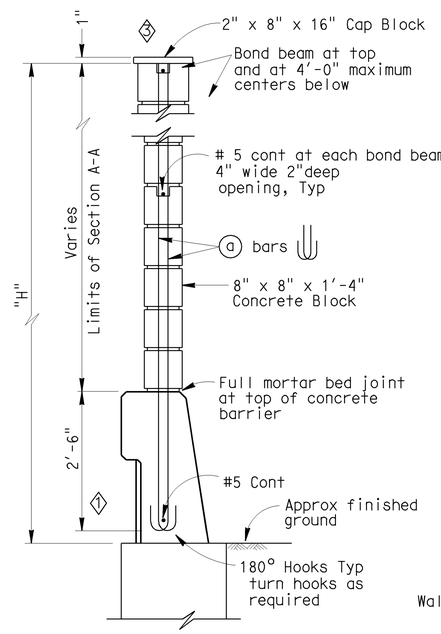

H=6'-4" THRU H=10'-4"

For details not shown,see H=12'-4" thru H=16'-4"

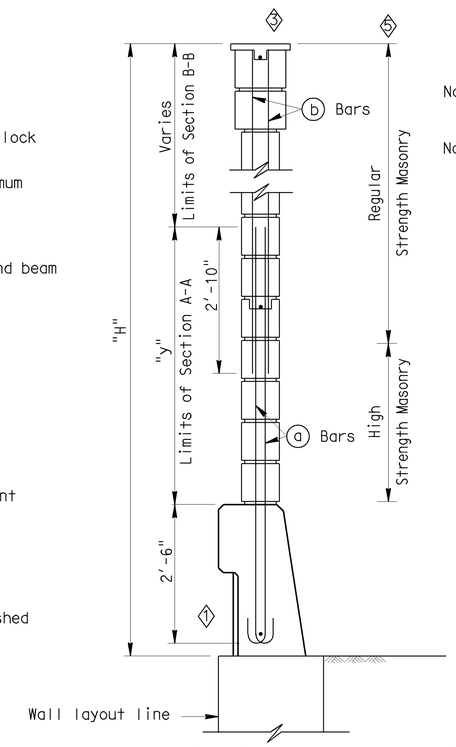

H=12'-4" THRU H=16'-4"

For details not shown,see H=6'-4" thru H=10'-4"

TYPICAL SECTIONS

No Scale

SPECIAL DETAILS

RETAINING WALL NO. 630

SOUNDWALL - MASONRY BLOCK WITH BARRIER ON RETAINING WALL

DETAILS NO. 1

STANDARD DRAWING

xs15-130-1e

APPROVED BY T SATTER
RESPONSIBLE TECHNICAL SPECIALIST
APPROVAL DATE 9-2-08

RELEASED BY ROBERTO LACALLE
RESPONSIBLE OFFICE CHIEF
RELEASE DATE REVISED

1 Revised Barrier
2 Revised Step
3 Revised Cap Blocks
4 Removed Note
5 Added Limits of Masonry Strength

STATE OF CALIFORNIA
DEPARTMENT OF TRANSPORTATION

DIVISION OF ENGINEERING SERVICES

BRIDGE NO. 55E0092
POST MILE 19.41

CU 12220
EA 0F0321

DS OSD 2147A (ENGLISH STANDARD DRAWING "XS" BORDER REV. 01/11/08)

ORIGINAL SCALE IN INCHES FOR REDUCED PLANS 0 1 2 3

DISREGARD PRINTS BEARING EARLIER REVISION DATES

REVISION DATES (PRELIMINARY STAGE ONLY) 02/18/09 04/07/09 04/17/09 06/08/09

SHEET 19 OF 26

USERNAME => trcarol

55e0092-g-SWdet01.dgn

DATE PLOTTED => 25-JAN-2010 TIME PLOTTED => 13:29

DIST.	COUNTY	ROUTE	POST MILES TOTAL PROJECT	SHEET NO.	TOTAL SHEETS
12	Ora	57	18.4/20.9	756	856

REGISTERED ENGINEER - CIVIL DATE 06/08/09

1-25-10
PLANS APPROVAL DATE

REGISTERED PROFESSIONAL ENGINEER JENNIFER L. ELWOOD No. C64034 Exp. 9/30/10 CIVIL STATE OF CALIFORNIA

The State of California or its officers or agents shall not be responsible for the accuracy or completeness of electronic copies of this plan sheet.

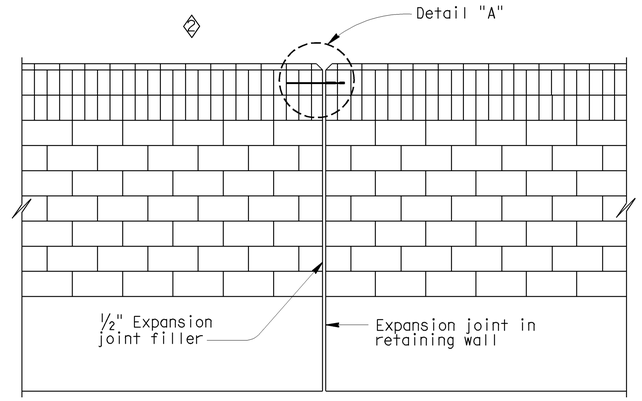

ALIGNMENT KEY DETAIL
No Scale

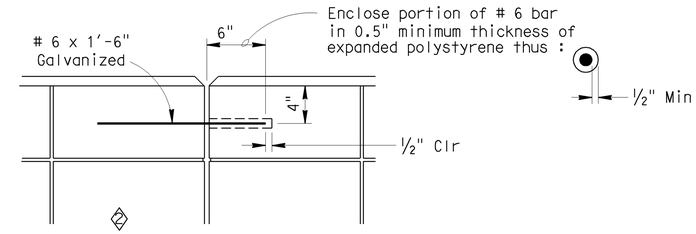

DETAIL A
No Scale

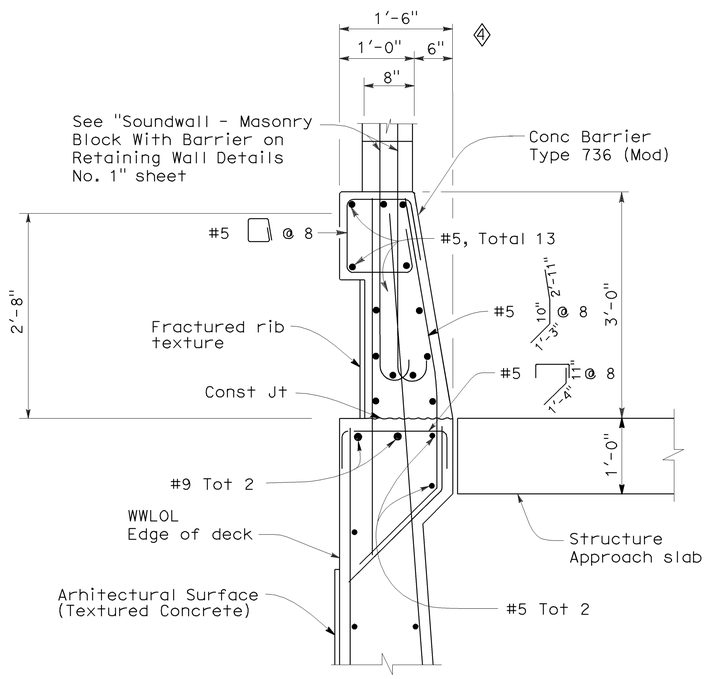

BARRIER SECTION
No Scale

NOTES:

I : For details not shown,see "Retaining Wall Type 1SWB" sheets.

II : Slope ground at traffic side of barrier to drain. Maximum slope ±10%. See Standard Plan B11-56, Note D.

DESIGN NOTES

DESIGN

Uniform Building Code,1997 Edition and the Bridge Design Specifications.

DESIGN WIND LOAD

33 PSF

DESIGN SEISMIC LOAD

0.57 Dead load

REINFORCED CONCRETE

f'c = 3250 PSI
fy = 60 KSI

CONCRETE MASONRY

REGULAR STRENGTH	HIGH STRENGTH	
f'm = 1500 PSI	f'm = 2000 PSI	f'm = 2500 PSI
f_b = 1500 PSI	f_b = 660 PSI	f_b = 830 PSI
fs = 24.0 KSI	fs = 24.0 KSI	fs = 24000 PSI
n = 25.8	n = 19.3	n = 15.5

LOAD FACTORS AND LOAD COMBINATIONS

Working Stress Design (WSD) Percentage of unit stress

Group 1: D + E + SC 100%
Group 2: D + W + SC + E 100%
Group 3: D + 0.71 EQD + E 100%

Where:

D = Dead load
E = Lateral earth pressure
SC = Live load surcharge
W = Wind load
EQD = Seismic dead load

Load Factor Design (LFD)

Group A: βD +1.7 E + 1.7 SC
Group B: βD +1.7 E + 1.3 W
Group C: βD +1.3 E + 1.0 EQE
Group D: βD +1.3 E + 1.0 EQD
Group E: βD +1.1 E + 0.85 (EQE + EQD)

Where : β = 0.9 or 1.2, whichever controls in design
D = Dead load
E = Lateral earth pressure
SC = Live load surcharge
W = Wind load
EQD = Seismic dead load
EQE = Seismic earth load

STRENGTH REDUCTION FACTORS, Ø

Reinforced concrete:
For flexure ---------- Ø=0.90
For shear ---------- Ø=0.85

Concrete masonry:
For flexure ---------- Ø=0.80
For shear ---------- Ø=0.60

Foundations :

See "RETAINING WALL WITH SOUNDWALL" sheets.

SPECIAL DETAILS

RETAINING WALL NO. 630

SOUNDWALL - MASONRY BLOCK WITH BARRIER ON RETAINING WALL

DETAILS NO. 2

STANDARD DRAWING

FILE NO. xs15-130-2e

APPROVED BY T SATTER (RESPONSIBLE TECHNICAL SPECIALIST)
APPROVAL DATE 4-15-08

RELEASED BY ROBERTO LACALLE (RESPONSIBLE OFFICE CHIEF)
RELEASE DATE REVISED

1 Revised Barrier
2 Revised Cap Blocks
3 Removed Detail
4 Revised Dimension & Detail

STATE OF CALIFORNIA
DEPARTMENT OF TRANSPORTATION

DIVISION OF ENGINEERING SERVICES

CU 12220
EA 0F0321

BRIDGE NO. 55E0092
POST MILE 19.41

DISREGARD PRINTS BEARING EARLIER REVISION DATES 02/18/09 04/07/09 04/17/09 06/08/09

SHEET 20 OF 26

DS OSD 2147A (ENGLISH STANDARD DRAWING "XS" BORDER REV. 01/11/08)

ORIGINAL SCALE IN INCHES FOR REDUCED PLANS 0 1 2 3

USERNAME => trcarol

55e0092-g-SWdet02.dgn

DATE PLOTTED => 25-JAN-2010 TIME PLOTTED => 11:30:29

DIST	COUNTY	ROUTE	POST MILES TOTAL PROJECT	SHEET No	TOTAL SHEETS
12	Ora	57	18.4/20.9	757	856

REGISTERED CIVIL ENGINEER 06/08/09 DATE

1-25-10
PLANS APPROVAL DATE

REGISTERED PROFESSIONAL ENGINEER MOHAMMED ATIQULLAH No. C47027 Exp. 12/31/09 CIVIL STATE OF CALIFORNIA

The State of California or its officers or agents shall not be responsible for the accuracy or completeness of electronic copies of this plan sheet.

OCTA
550 S. MAIN STREET
ORANGE, CA 92863

CH2M HILL
6 HUTTON CENTRE DRIVE, SUITE 700
SANTA ANA, CA 92707

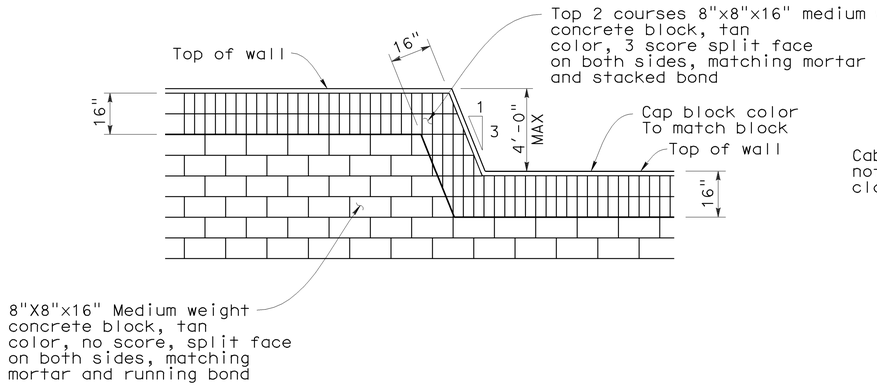

TRANSITION ELEVATION

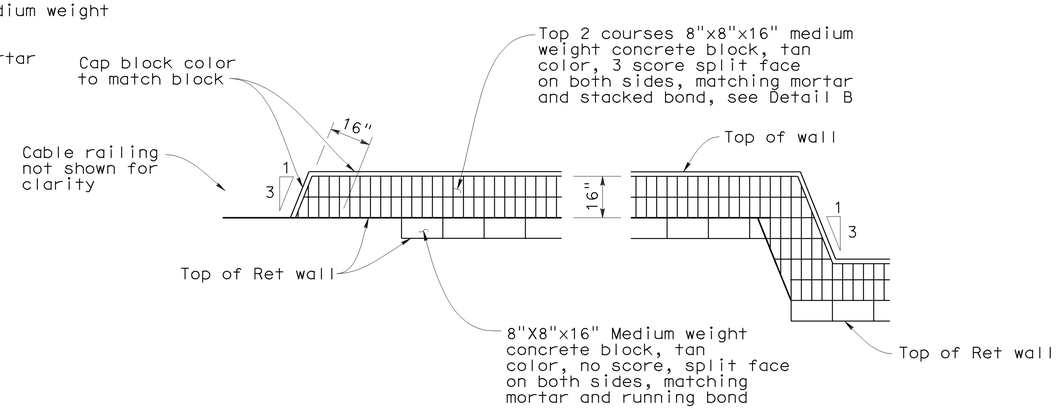

END WALL ELEVATION

CONCRETE BLOCK TYPE, COLOR AND PLACEMENT

No Scale

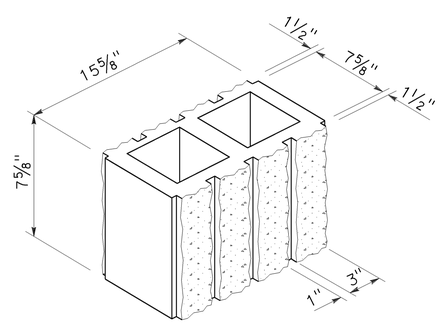

DETAIL B

No Scale

8" Wide 3-score split face both sides

Jon Hamaguchi
DESIGN OVERSIGHT Jon Hamaguchi
11-24-09
SIGN OFF DATE

DESIGN	BY M. Atiqullah	CHECKED E. Cutler
DETAILS	BY M. Atiqullah	CHECKED E. Cutler
QUANTITIES	BY B. Ho	CHECKED L. Ros

PREPARED FOR THE STATE OF CALIFORNIA DEPARTMENT OF TRANSPORTATION

Ayman Salama
PROJECT ENGINEER

BRIDGE NO. 55E0092
POST MILE 19.41

RETAINING WALL NO. 630

SOUNDWALL MASONRY BLOCK MISCELLANEOUS DETAILS

DESIGN DETAIL SHEET (ENGLISH) (REV. 2/25/05)

ORIGINAL SCALE IN INCHES FOR REDUCED PLANS 0 1 2 3

CU 12220
EA 0F0321

DISREGARD PRINTS BEARING EARLIER REVISION DATES

REVISION DATES (PRELIMINARY STAGE ONLY) 02/18/09 04/07/09 04/17/09 06/08/09

SHEET 21 OF 26

FILE => 55e0092-u-miscdt01.dgn

USERNAME => ttcarol DATE PLOTTED => 25-JAN-2010 TIME PLOTTED => 13:30

DIST	COUNTY	ROUTE	POST MILES TOTAL PROJECT	SHEET No	TOTAL SHEETS
12	Ora	57	18.4/20.9	758	856

REGISTERED CIVIL ENGINEER — DATE 06/08/09

1-25-10
PLANS APPROVAL DATE

REGISTERED PROFESSIONAL ENGINEER — MOHAMMED ATIQULLAH — No. C47027 — Exp. 12/31/09 — CIVIL — STATE OF CALIFORNIA

The State of California or its officers or agents shall not be responsible for the accuracy or completeness of electronic copies of this plan sheet.

OCTA
550 S. MAIN STREET
ORANGE, CA 92863

CH2M HILL
6 HUTTON CENTRE DRIVE, SUITE 700
SANTA ANA, CA 92707

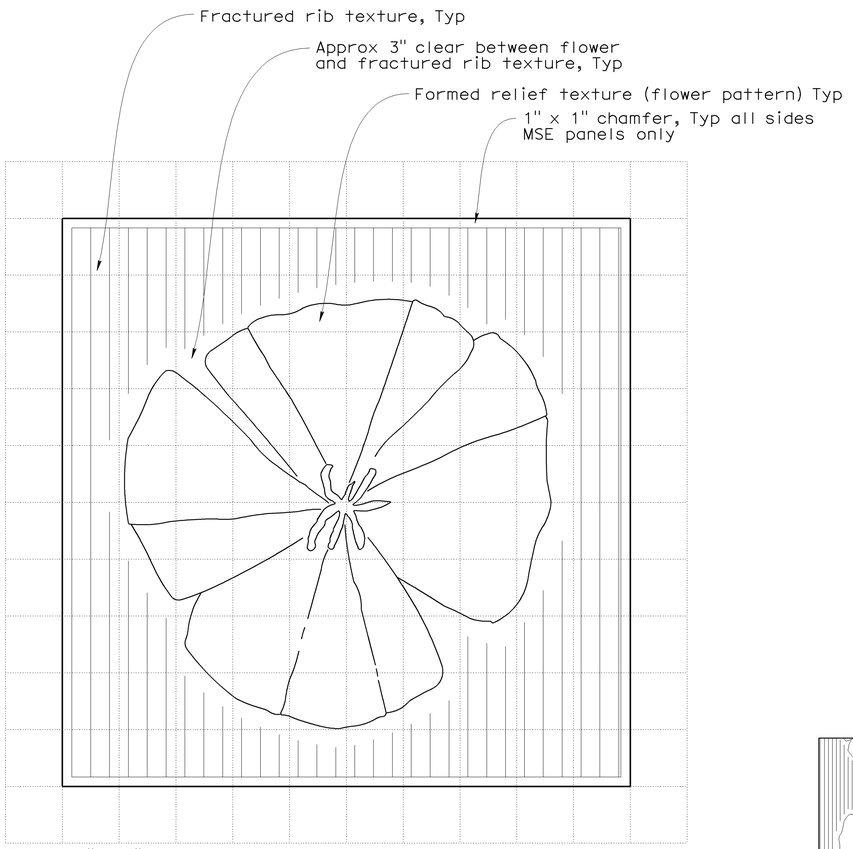

Grid = 6" x 6"

ARCHITECTURAL SURFACE (TEXTURED CONCRETE) FOR MSE PANEL

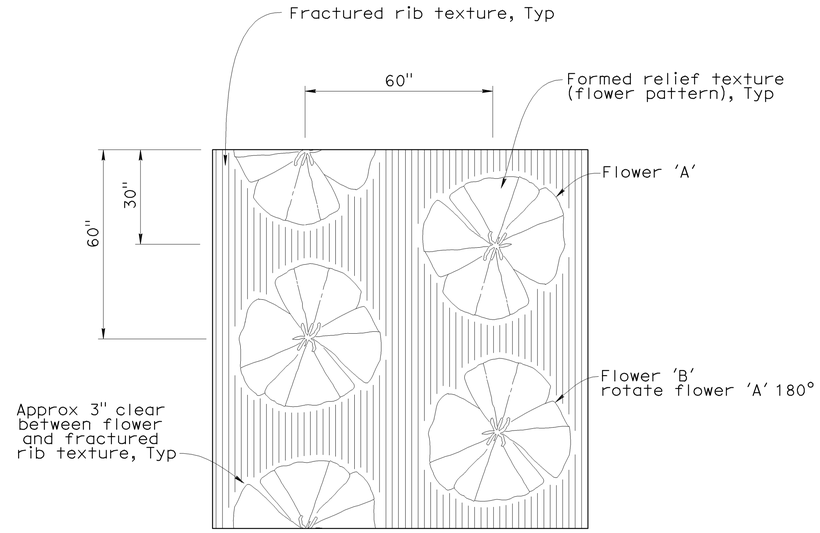

ARCHITECTURAL SURFACE (TEXTURED CONCRETE) PATTERN

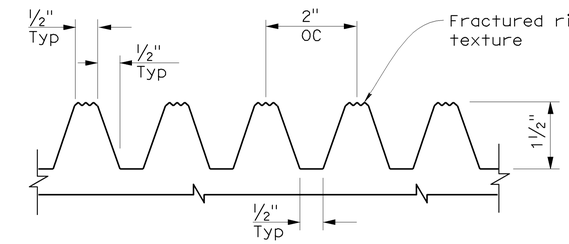

FRACTURED RIB TEXTURE DETAIL

(Elastomer Formliner)

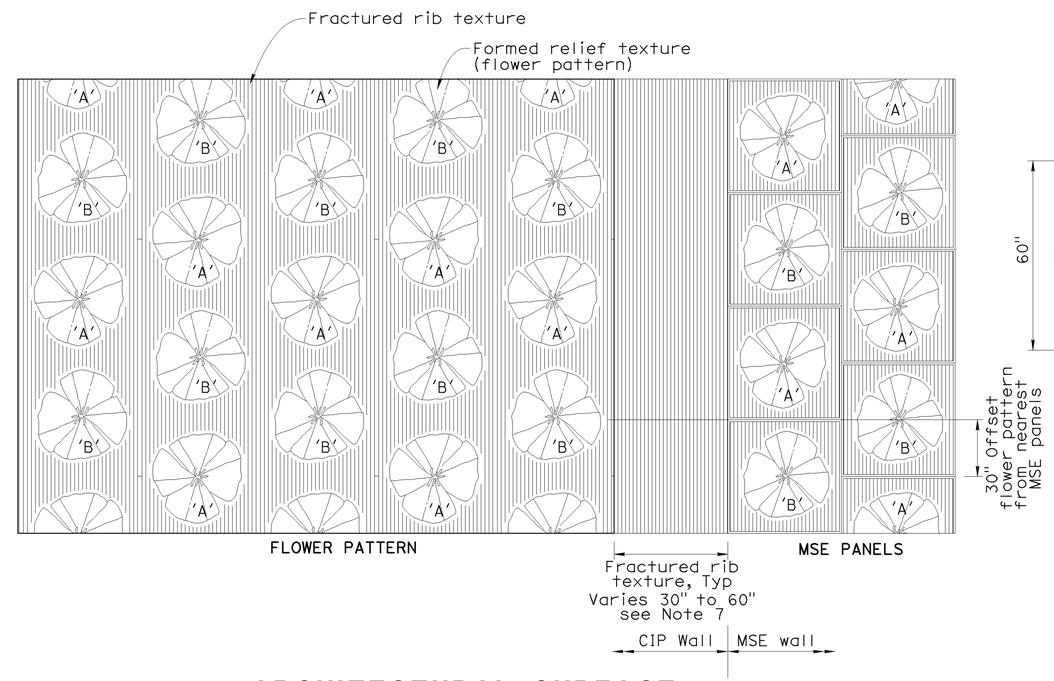

ARCHITECTURAL SURFACE (TEXTURED CONCRETE) ELEVATION

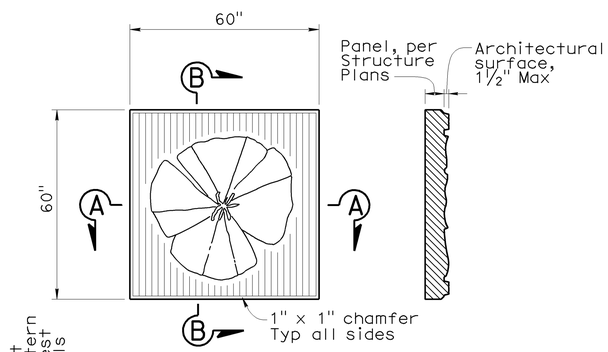

VIEW — SECTION B-B

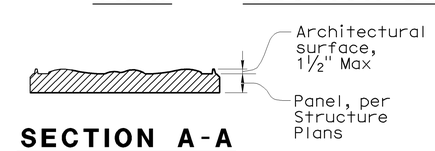

SECTION A-A

MSE PANEL

No scale

NOTES:

1. Identical flower images, scale and spacing shall be used for flower pattern and MSE wall panels.
2. Within a vertical column, flower images shall alternate between flowers 'A' and 'B'. Vertical columns shall be offset 30" from adjacent columns.
3. Where placed on walls bounded by concrete barriers, finished grade or top of wall, flower pattern shall be continued without concern for partial flower images, except as noted.
4. Refer to structural details for width of smooth band to be applied at edges of structures.
5. Where the flower pattern will be used adjacent to a horizontal limit such as a bridge abutment, adjoining MSE wall or overhead sign structure support, flower pattern shall be discontinued from a section not less than 30" and not greater than 60" wide from the horizontal limit to avoid truncation of flower images. Fractured rib texture shall be inserted in the resulting gap to create a continuous buffer between pattern areas.
6. The nearest column of flower images (flower pattern) shall be offset vertically 30" from the panels.
7. Vary fractured rib texture width (30" to 60") to provide complete flower pattern on cip wall side.

DESIGN OVERSIGHT — Jon Hamaguchi
11-24-09
SIGN OFF DATE

	BY	CHECKED
DESIGN	M. Atiqullah	E. Cutler
DETAILS	M. Atiqullah	E. Cutler
QUANTITIES	B. Ho	L. Ros

PREPARED FOR THE STATE OF CALIFORNIA DEPARTMENT OF TRANSPORTATION

Ayman Salama
PROJECT ENGINEER

BRIDGE NO. 55E0092
POST MILE 19.41

RETAINING WALL NO. 630
ARCHITECTURAL TREATMENT DETAILS

DESIGN DETAIL SHEET (ENGLISH) (REV. 2/25/05)

ORIGINAL SCALE IN INCHES FOR REDUCED PLANS 0 1 2 3

CU 12220
EA 0F0321

DISREGARD PRINTS BEARING EARLIER REVISION DATES → 06/08/09

REVISION DATES (PRELIMINARY STAGE ONLY)

SHEET 22 OF 26

FILE => 55e0092-u-tarcdt01.dgn

USERNAME => trcarol DATE PLOTTED => 25-JAN-2010 TIME PLOTTED => 13:30

DIST	COUNTY	ROUTE	POST MILES TOTAL PROJECT	SHEET No	TOTAL SHEETS
12	Ora	57	18.4/20.9	759	856

GEOTECHNICAL PROFESSIONAL — DATE 06/08/09

1-25-10
PLANS APPROVAL DATE

The State of California or its officers or agents shall not be responsible for the accuracy or completeness of electronic copies of this plan sheet.

REGISTERED PROFESSIONAL ENGINEER — HISHAM M. NOFAL No. 2765 Exp. 09/30/09 GEOTECHNICAL — STATE OF CALIFORNIA

OCTA
550 S. MAIN STREET
ORANGE, CA 92863

CH2M HILL
6 HUTTON CENTRE DRIVE, SUITE 700
SANTA ANA, CA 92707

BENCHMARK:

Horizontal coordinates are CCS NAD-83, Zone 6.
vertical control based on North American Vertical Datum 1988.
Pt 1150: N2277373.804, E6066685.179, Elev 331.888

SAMPLER TYPES:

California modified ring sampler
standard penetration test sampler

HAMMER TYPE:

Automatic hammer

CORRECTION FACTOR:

To convert from California modified ring sampler blow count to equivalent standard penetration test sampler blow count, for granular and cohesive soil, multiply by 0.67.

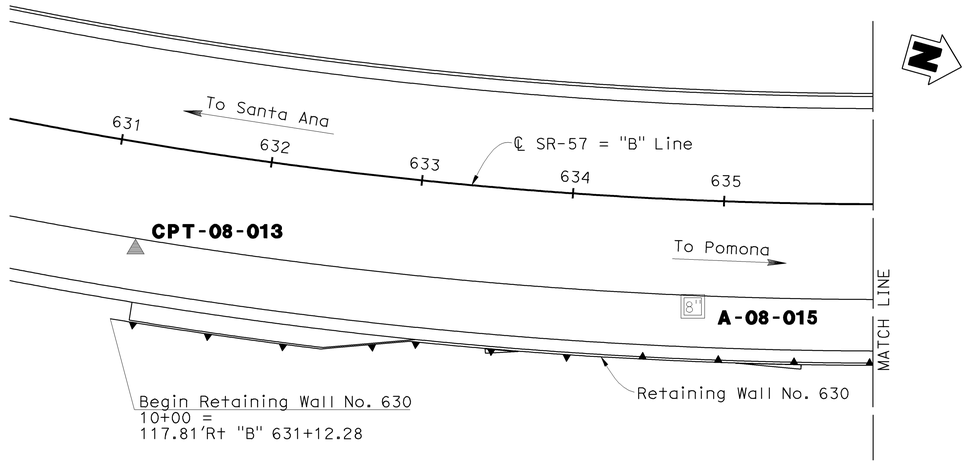

PLAN

1"=50'

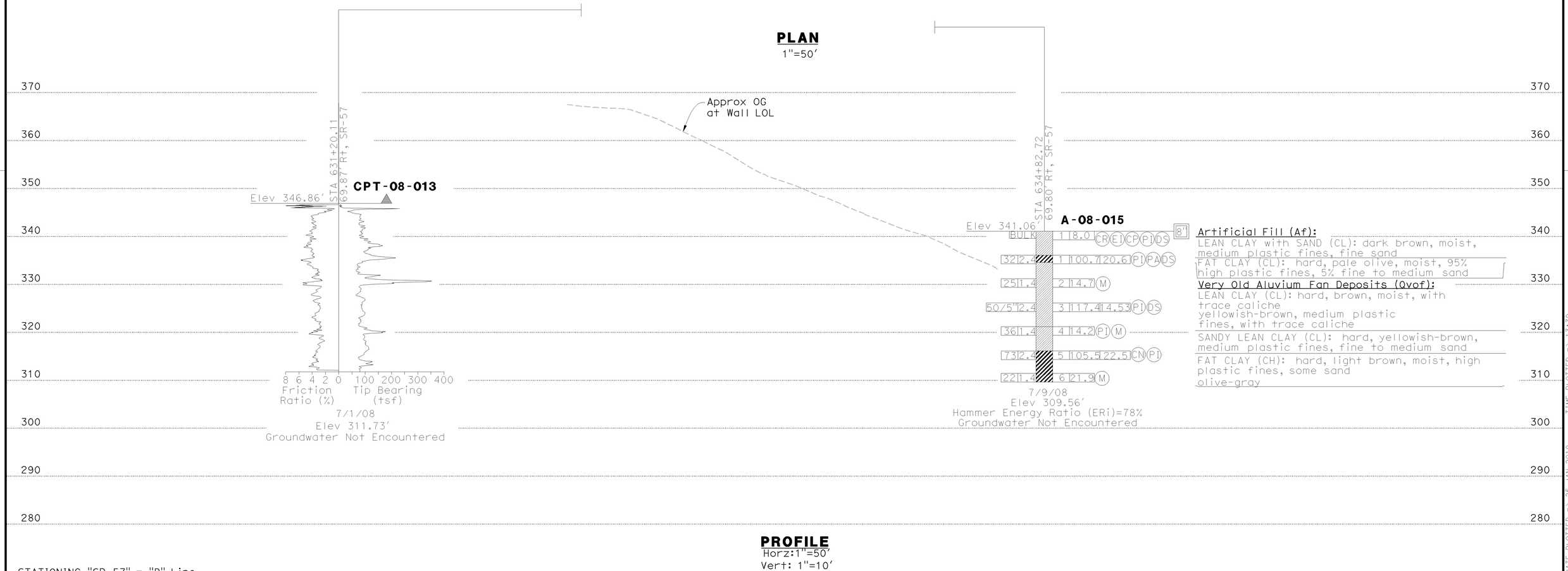

PROFILE

Horz:1"=50'
Vert: 1"=10'

STATIONING "SR-57" = "B" Line

626 627 628 629 630 631 632 633 634 635 636 637 638 639 640 641

DESIGN OVERSIGHT Jon Hamaguchi	DRAWN BY	K. Reyes	R. Bethapudi — FIELD INVESTIGATION BY:
11-24-09 SIGN OFF DATE	CHECKED BY	H. Nofal	DATE

PREPARED FOR THE STATE OF CALIFORNIA DEPARTMENT OF TRANSPORTATION

Ayman Salama — PROJECT ENGINEER

BRIDGE NO. 55E0092
POST MILES 19.41

RETAINING WALL NO. 630

LOG OF TEST BORINGS SHEET 1 OF 4

ORIGINAL SCALE IN INCHES FOR REDUCED PLANS 0 1 2 3

CU 12220
EA 0F0321

DISREGARD PRINTS BEARING EARLIER REVISION DATES

REVISION DATES (PRELIMINARY STAGE ONLY): 02/18/09 04/07/09 04/17/09 06/08/09

SHEET 23 OF 26

FILE => 55e0092-z-1tb01.dgn

USERNAME => rrcarol DATE PLOTTED => 25-JAN-2010 TIME PLOTTED => 13:30

DIST	COUNTY	ROUTE	POST MILES TOTAL PROJECT	SHEET No	TOTAL SHEETS
12	Ora	57	18.4/20.9	760	856

Hisham Nofal 06/08/09
GEOTECHNICAL PROFESSIONAL DATE

1-25-10
PLANS APPROVAL DATE

REGISTERED PROFESSIONAL ENGINEER HISHAM M. NOFAL No. 2765 Exp. 09/30/09 GEOTECHNICAL STATE OF CALIFORNIA

The State of California or its officers or agents shall not be responsible for the accuracy or completeness of electronic copies of this plan sheet.

OCTA
550 S. MAIN STREET
ORANGE, CA 92863

CH2M HILL
6 HUTTON CENTRE DRIVE, SUITE 700
SANTA ANA, CA 92707

BENCHMARK:

Horizontal coordinates are CCS NAD-83, Zone 6.
vertical control based on North American Vertical Datum 1988.
Pt 1150: N2277373.804, E6066685.179, Elev 331.888

SAMPLER TYPES:

California modified ring sampler
standard penetration test sampler

HAMMER TYPE:

Automatic hammer

CORRECTION FACTOR:

To convert from California modified ring sampler blow count to equivalent standard penetration test sampler blow count, for granular and cohesive soil, multiply by 0.67.

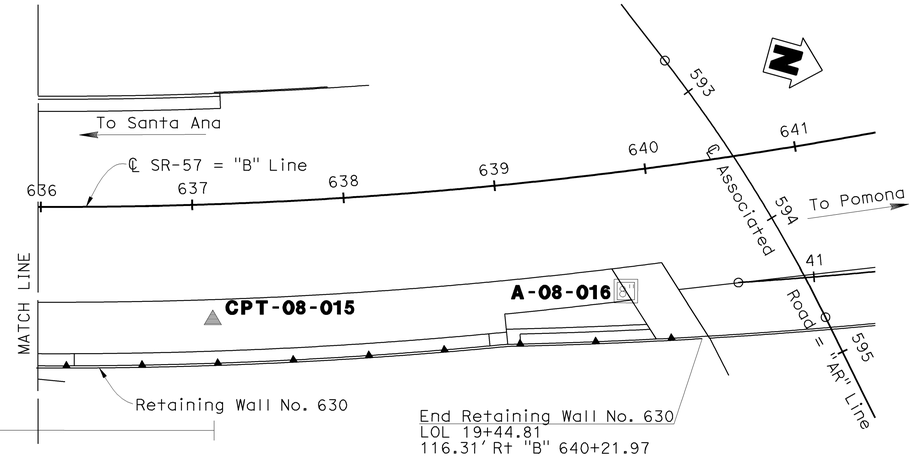

PLAN
1"=50'

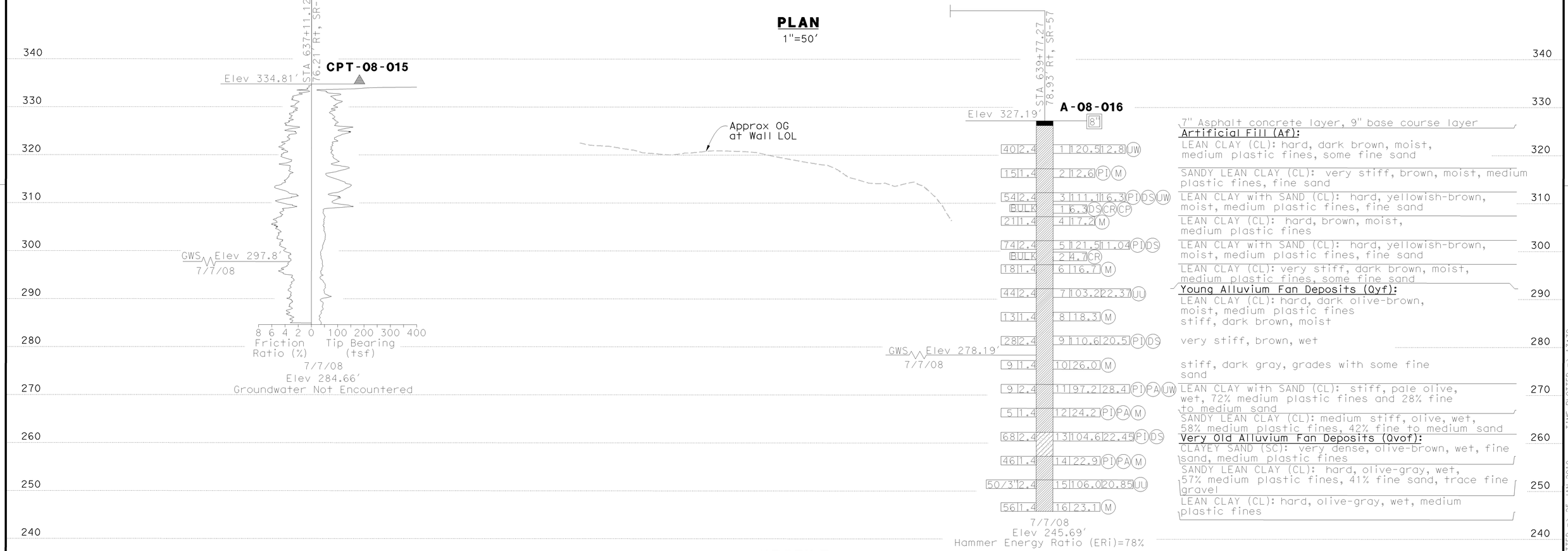

PROFILE
Horz:1"=50'
Vert: 1"=10'

STATIONING "SR-57" = "B" Line

631 632 633 634 635 636 637 638 639 640 641 642 643 644 645 646

Jon Hamaguchi DESIGN OVERSIGHT	DRAWN BY	K. Reyes	R. Bethapudi FIELD INVESTIGATION BY:
11-24-09 SIGN OFF DATE	CHECKED BY	H. Nofal	DATE

PREPARED FOR THE STATE OF CALIFORNIA DEPARTMENT OF TRANSPORTATION

Ayman Salama
PROJECT ENGINEER

BRIDGE NO. 55E0092
POST MILES 19.41

RETAINING WALL NO. 630

LOG OF TEST BORINGS SHEET 2 OF 4

ORIGINAL SCALE IN INCHES FOR REDUCED PLANS 0 1 2 3

CU 12220
EA 0F0321

DISREGARD PRINTS BEARING EARLIER REVISION DATES

REVISION DATES (PRELIMINARY STAGE ONLY) 02/18/09 04/07/09 04/17/09 06/08/09

SHEET 24 OF 26

FILE => 55e0092-z-1tb02.dgn

USERNAME => trcarol DATE PLOTTED => 25-JAN-2010 TIME PLOTTED => 13:30

REFERENCE: CALTRANS SOIL & ROCK LOGGING, CLASSIFICATION, AND PRESENTATION MANUAL (JUNE 2007)

DIST	COUNTY	ROUTE	POST MILES TOTAL PROJECT	SHEET No	TOTAL SHEETS
12	Ora	57	18.4/20.9	761	856

Hisham Nofal 06/08/09
GEOTECHNICAL PROFESSIONAL DATE

REGISTERED PROFESSIONAL ENGINEER HISHAM M. NOFAL No. 2765 Exp. 09/30/09 GEOTECHNICAL STATE OF CALIFORNIA

1-25-10
PLANS APPROVAL DATE

The State of California or its officers or agents shall not be responsible for the accuracy or completeness of electronic copies of this plan sheet.

OCTA
550 S. MAIN STREET
ORANGE, CA 92863

CH2M HILL
6 HUTTON CENTRE DRIVE, SUITE 700
SANTA ANA, CA 92707

GROUP SYMBOLS AND NAMES

Graphic/Symbol	Group Names	Graphic/Symbol	Group Names
GW	Well-graded GRAVEL Well-graded GRAVEL with SAND	CL	Lean CLAY Lean CLAY with SAND Lean CLAY with GRAVEL SANDY lean CLAY SANDY lean CLAY with GRAVEL GRAVELLY lean CLAY GRAVELLY lean CLAY with SAND
GP	Poorly graded GRAVEL Poorly graded GRAVEL with SAND		
GW-GM	Well-graded GRAVEL with SILT Well-graded GRAVEL with SILT and SAND	CL-ML	SILTY CLAY SILTY CLAY with SAND SILTY CLAY with GRAVEL SANDY SILTY CLAY SANDY SILTY CLAY with GRAVEL GRAVELLY SILTY CLAY GRAVELLY SILTY CLAY with SAND
GW-GC	Well-graded GRAVEL with CLAY (or SILTY CLAY) Well-graded GRAVEL with CLAY and SAND (or SILTY CLAY and SAND)		
GP-GM	Poorly graded GRAVEL with SILT Poorly graded GRAVEL with SILT and SAND	ML	SILT SILT with SAND SILT with GRAVEL SANDY SILT SANDY SILT with GRAVEL GRAVELLY SILT GRAVELLY SILT with SAND
GP-GC	Poorly graded GRAVEL with CLAY (or SILTY CLAY) Poorly graded GRAVEL with CLAY and SAND (or SILTY CLAY and SAND)		
GM	SILTY GRAVEL SILTY GRAVEL with SAND	OL	ORGANIC lean CLAY ORGANIC lean CLAY with SAND ORGANIC lean CLAY with GRAVEL SANDY ORGANIC lean CLAY SANDY ORGANIC lean CLAY with GRAVEL GRAVELLY ORGANIC lean CLAY GRAVELLY ORGANIC lean CLAY with SAND
GC	CLAYEY GRAVEL CLAYEY GRAVEL with SAND		
GC-GM	SILTY, CLAYEY GRAVEL SILTY, CLAYEY GRAVEL with SAND	OL	ORGANIC SILT ORGANIC SILT with SAND ORGANIC SILT with GRAVEL SANDY ORGANIC SILT SANDY ORGANIC SILT with GRAVEL GRAVELLY ORGANIC SILT GRAVELLY ORGANIC SILT with SAND
SW	Well-graded SAND Well-graded SAND with GRAVEL		
SP	Poorly graded SAND Poorly graded SAND with GRAVEL	CH	Fat CLAY Fat CLAY with SAND Fat CLAY with GRAVEL SANDY fat CLAY SANDY fat CLAY with GRAVEL GRAVELLY fat CLAY GRAVELLY fat CLAY with SAND
SW-SM	Well-graded SAND with SILT Well-graded SAND with SILT and GRAVEL		
SW-SC	Well-graded SAND with CLAY (or SILTY CLAY) Well-graded SAND with CLAY and GRAVEL (or SILTY CLAY and GRAVEL)	MH	Elastic SILT Elastic SILT with SAND Elastic SILT with GRAVEL SANDY elastic SILT SANDY elastic SILT with GRAVEL GRAVELLY elastic SILT GRAVELLY elastic SILT with SAND
SP-SM	Poorly graded SAND with SILT Poorly graded SAND with SILT and GRAVEL		
SP-SC	Poorly graded SAND with CLAY (or SILTY CLAY) Poorly graded SAND with CLAY and GRAVEL (or SILTY CLAY and GRAVEL)	OH	ORGANIC fat CLAY ORGANIC fat CLAY with SAND ORGANIC fat CLAY with GRAVEL SANDY ORGANIC fat CLAY SANDY ORGANIC fat CLAY with GRAVEL GRAVELLY ORGANIC fat CLAY GRAVELLY ORGANIC fat CLAY with SAND
SM	SILTY SAND SILTY SAND with GRAVEL		
SC	CLAYEY SAND CLAYEY SAND with GRAVEL	OH	ORGANIC elastic SILT ORGANIC elastic SILT with SAND ORGANIC elastic SILT with GRAVEL SANDY ORGANIC elastic SILT SANDY ORGANIC elastic SILT with GRAVEL GRAVELLY ORGANIC elastic SILT GRAVELLY ORGANIC elastic SILT with SAND
SC-SM	SILTY, CLAYEY SAND SILTY, CLAYEY SAND with GRAVEL		
PT	PEAT	OL/OH	ORGANIC SOIL ORGANIC SOIL with SAND ORGANIC SOIL with GRAVEL SANDY ORGANIC SOIL SANDY ORGANIC SOIL with GRAVEL GRAVELLY ORGANIC SOIL GRAVELLY ORGANIC SOIL with SAND
	COBBLES COBBLES and BOULDERS BOULDERS		

FIELD AND LABORATORY TESTING

- (C) Consolidation (ASTM D 2435)
- (CL) Collapse Potential (ASTM D 5333)
- (CP) Compaction Curve (CTM 216)
- (CR) Corrosivity Testing (CTM 643, CTM 422, CTM 417)
- (CU) Consolidated Undrained Triaxial (ASTM D 4767)
- (DS) Direct Shear (ASTM D 3080)
- (EI) Expansion Index (ASTM D 4829)
- (M) Moisture Content (ASTM D 2216)
- (OC) Organic Content-% (ASTM D 2974)
- (P) Permeability (CTM 220)
- (PA) Particle Size Analysis (ASTM D 422)
- (PI) Plasticity Index (AASHTO T 90) Liquid Limit (AASHTO T 89)
- (PL) Point Load Index (ASTM D 5731)
- (PM) Pressure Meter
- (PP) Pocket Penetrometer
- (R) R-Value (CTM 301)
- (SE) Sand Equivalent (CTM 217)
- (SG) Specific Gravity (AASHTO T 100)
- (SL) Shrinkage Limit (ASTM D 427)
- (SW) Swell Potential (ASTM D 4546)
- (TV) Pocket Torvane
- (UC) Unconfined Compression-Soil (ASTM D 2166) Unconfined Compression-Rock (ASTM D 2938)
- (UU) Unconsolidated Undrained Triaxial (ASTM D 2850)
- (UW) Unit Weight (ASTM D 4767)
- (VS) Vane Shear (AASHTO T 223)

APPARENT DENSITY OF COHESIONLESS SOILS

Description	SPT N_{60} (Blows / 12 inches)
Very loose	0 - 4
Loose	5 - 10
Medium Dense	11 - 30
Dense	31 - 50
Very Dense	> 50

MOISTURE

Description	Criteria
Dry	Absence of moisture, dusty, dry to the touch
Moist	Damp but no visible water
Wet	Visible free water, usually soil is below water table

PERCENT OR PROPORTION OF SOILS

Description	Criteria
Trace	Particles are present but estimated to be less than 5%
Few	5 to 10%
Little	15 to 25%
Some	30 to 45%
Mostly	50 to 100%

PARTICLE SIZE

Description		Size
Boulder		> 12"
Cobble		3" to 12"
Gravel	Coarse	3/4" to 3"
	Fine	No. 4 to 3/4"
Sand	Coarse	No. 10 to No. 4
	Medium	No. 40 to No. 10
	Fine	No. 200 to No. 40

CEMENTATION

Description	Criteria
Weak	Crumbles or breaks with handling or little finger pressure.
Moderate	Crumbles or breaks with considerable finger pressure.
Strong	Will not crumble or break with finger pressure.

CONSISTENCY OF COHESIVE SOILS

Description	Unconfined Compressive Strength (tsf)	Pocket Penetrometer Measurement (tsf)	Torvane Measurement (tsf)	Field Approximation
Very Soft	< 0.25	< 0.25	< 0.12	Easily penetrated several inches by fist
Soft	0.25 to 0.50	0.25 to 0.50	0.12 to 0.25	Easily penetrated several inches by thumb
Medium Stiff	0.50 to 1.0	0.50 to 1.0	0.25 to 0.50	Penetrated several inches by thumb with moderate effort
Stiff	1 to 2	1 to 2	0.50 to 1.0	Readily indented by thumb but penetrated only with great effort
Very Stiff	2 to 4	2 to 4	1.0 to 2.0	Readily indented by thumbnail
Hard	> 4.0	> 4.0	> 2.0	Indented by thumbnail with difficulty

PLASTICITY OF FINE-GRAINED SOILS

Description	Criteria
Nonplastic	A 1/8-inch thread cannot be rolled at any water content.
Low	The thread can barely be rolled and the lump cannot be formed when drier than the plastic limit.
Medium	The thread is easy to roll and not much time is required to reach the plastic limit. The thread cannot be rerolled after reaching the plastic limit. The lump crumbles when drier than the plastic limit.
High	It takes considerable time rolling and kneading to reach the plastic limit. The thread can be rerolled several times after reaching the plastic limit. The lump can be formed without crumbling when drier than the plastic limit.

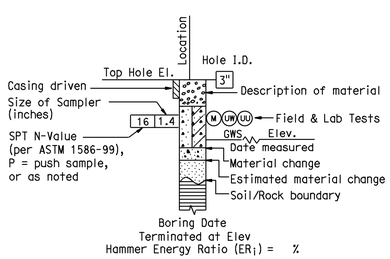

ROTARY BORING

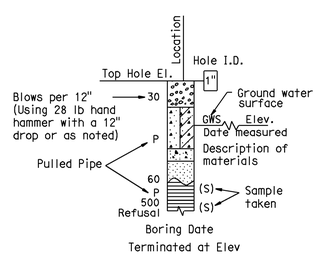

HAND BORING

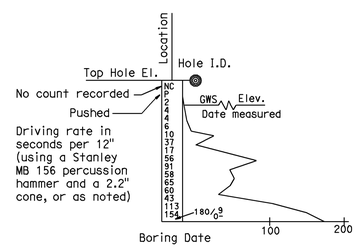

DYNAMIC CONE PENETRATION BORING

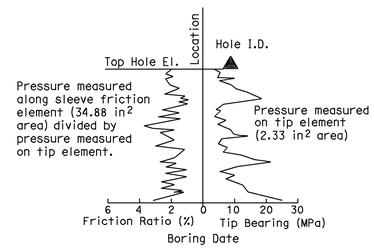

CONE PENETRATION TEST (CPT) SOUNDING

BOREHOLE IDENTIFICATION

Symbol	Hole Type	Description
Size	A	Auger Boring
Size	R P	Rotary drilled boring Rotary percussion boring (air)
Size	R	Rotary drilled diamond core
Size	HD HA	Hand driven (1-inch soil tube) Hand Auger
●	D	Dynamic Cone Penetration Boring
◕	B	Hollow Stem Auger Boring (HSA)
▲	CPT	Cone Penetration Test (ASTM D 5778-95)
□	O	Other

Note: Size in inches.

RETAINING WALL No. 630

SOIL LEGEND

LOG OF TEST BORINGS SHEET 3 OF 4

Jon Hamaguchi
DESIGN OVERSIGHT Jon Hamaguchi
11-24-09
SIGN OFF DATE

DRAWN BY K. Reyes
CHECKED BY H. Nofal

R. Bethapudi
FIELD INVESTIGATION BY:
DATE

PREPARED FOR THE STATE OF CALIFORNIA DEPARTMENT OF TRANSPORTATION

Ayman Salama
PROJECT ENGINEER

BRIDGE NO. 55E0092
POST MILES 19.41

ORIGINAL SCALE IN INCHES FOR REDUCED PLANS 0 1 2 3

CU 12220
EA 0F0321

DISREGARD PRINTS BEARING EARLIER REVISION DATES
REVISION DATES (PRELIMINARY STAGE ONLY) 02/27/09 04/27/09 04/27/09 06/08/09

SHEET 25 OF 26

FILE => 55e0092-z-1tb03.dgn

USERNAME => trcarol DATE PLOTTED => 25-JAN-2010 TIME PLOTTED => 13:30

FED. ROAD DIST. NO.	STATE	F. A. PROJECT NO.	SHEET NO.	TOTAL SHEETS
7	CALIF			

DIST.	COUNTY	ROUTE	POSTMILE	SHEET NO.	TOTAL SHEETS
07	ORA	57	17.6/20.7	171	180

Date Approved September 30, 1968

BENCH MARK

BM "40-19A-56" Elev. 292.88
Set chiz. knob on top N.E. cor. of S.E. conc. pedestal of Hathaway Co. oil well, A.V.M. "10; 48' W. of ℄ of Associated Rd., 500' N. of Sta. 391+22. "P" Line

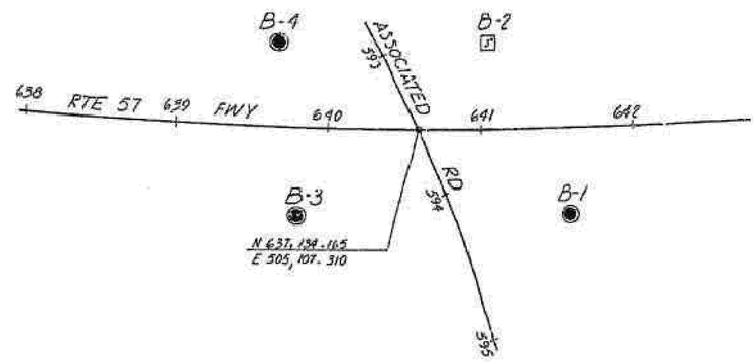

AS BUILT PLANS
Contract No. 07-032184
Date Completed
Document No. 70001578

DIVISION OF ENGINEERING SERVICES - GEOTECHNICAL SERVICES					
As-Built Log of Test Borings sheet is considered an informational document only. As such, the State of California registration seal with signature, license number and registration certificate expiration date confirm that this is a true and accurate copy of the original document. This drawing is available and presented only for the convenience of any bidder, contractor or other interested party.					
DIST.	COUNTY	ROUTE	POST MILES-TOTAL PROJECT	Sheet No.	Total Sheets
12	Ora	57	18.4/20.9	762	856
Hisham Nofal REGISTERED CIVIL ENGINEER			06/08/09 DATE		
RETAINING WALL NO. 630					
LOG OF TEST BORINGS SHEET 4 of 4					
NOTE: A COPY OF THIS LOG OF TEST BORINGS IS AVAILABLE AT OFFICE OF STRUCTURE MAINTENANCE AND INVESTIGATIONS, SACRAMENTO, CALIFORNIA		CU:12220 EA:0F0231	BRIDGE No. 55E0092		
To accompany plans dated 1-25-10			Sheet 26	of 26	

REGISTERED PROFESSIONAL ENGINEER
HISHAM M. NOFAL
No. 2765
Exp. 09/30/09
GEOTECHNICAL
STATE OF CALIFORNIA

PLAN
Scale 1" = 50'

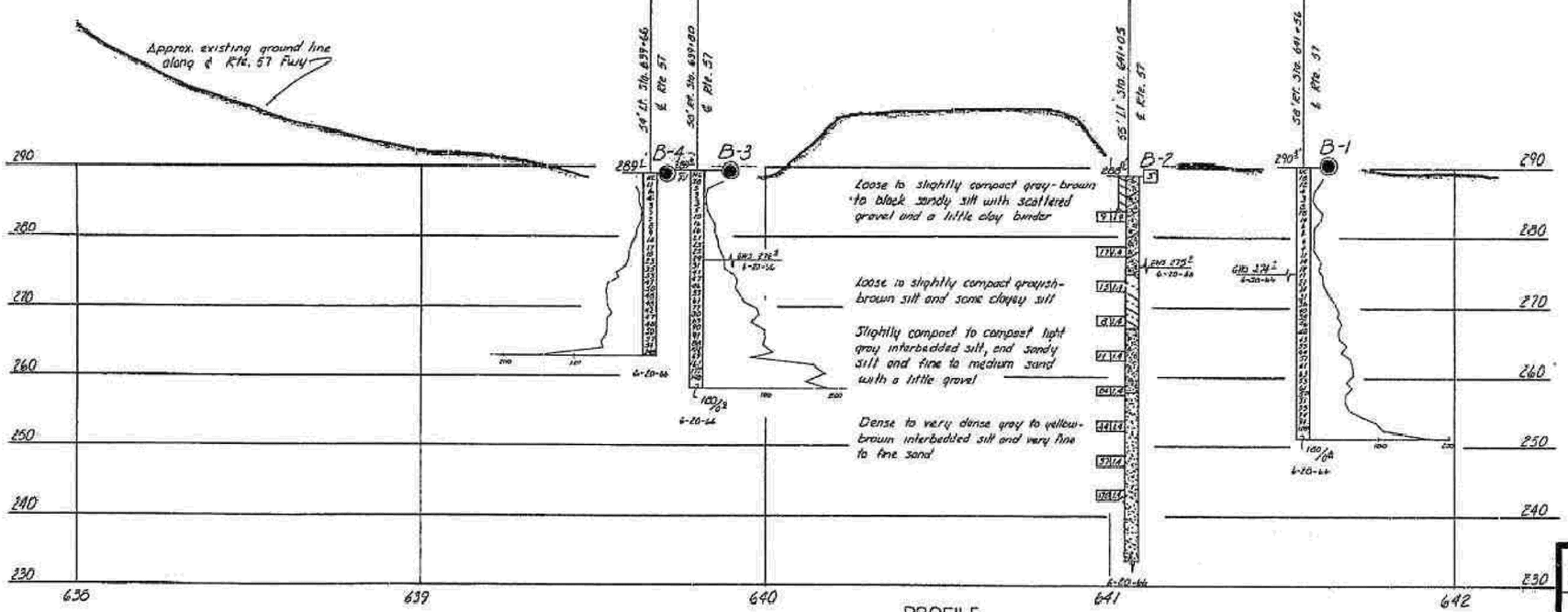

PROFILE
Scale Vert. 1" = 10'
Horiz. 1" = 20'

INFORMATION ON ACTUAL FOUNDATION CONDITIONS ENCOUNTERED IS ON FILE IN BRIDGE GEOLOGY SECTION

LEGEND OF BORING OPERATIONS

- Penetrometer
- 2¼" Core Penetrometer
- Sampler Boring (Dry)
- Rotary Boring (Wet)
- Auger Boring (Dry)
- Jet Boring
- Core Boring
- Test Pit
- Penetration Bounce
- Rotary Boring
- 1" Soil Tube

LEGEND OF EARTH MATERIALS

- Gravel
- Sand
- Silt
- Clay
- Sandy Clay or Clayey Sand
- Sandy Silt or Silty Sand
- Silty Clay or Clayey Silt
- Peat Muck Organic Matter
- Fill Material
- Igneous Rock
- Sedimentary Rock
- Metamorphic Rock

CLASSIFICATION OF MATERIAL BASED ON STANDARD GRADE SIZE LIMITS

Diagram showing the basis for estimates of soil size distribution used in interpretation of boring logs. Also showing the terms "cobbles" and "boulders" in accordance with the terms "gravel" may be added to the class sand, etc. "gravelly sand". The terms "silty" and "clayey" are used to describe silt and gravel, depend to standard grade size limits.

NOTE: Classification of earth material as shown on this sheet is based upon field inspection and is not to be construed to imply mechanical analysis.

STATE OF CALIFORNIA
DEPARTMENT OF PUBLIC WORKS
DIVISION OF HIGHWAYS

ASSOCIATED ROAD UNDERCROSSING

LOG OF TEST BORINGS

SCALE As Noted	BRIDGE 55-466	FILE	DRAWING 55466-12

PREL. DRAWING No. PR-

Change 07208
W.A. 032151

FILENAME => 55e0092-z-ltb04.tif

ENGINEERING GEOLOGY SECTION

DIST	COUNTY	ROUTE	POST MILES TOTAL PROJECT	SHEET No	TOTAL SHEETS
12	Ora	57	18.4/20.9	763	856

REGISTERED CIVIL ENGINEER 06/08/09 DATE

1-25-10
PLANS APPROVAL DATE

REGISTERED PROFESSIONAL ENGINEER JENNIFER L. ELWOOD No. C64034 Exp. 9/30/10 CIVIL STATE OF CALIFORNIA

The State of California or its officers or agents shall not be responsible for the accuracy or completeness of electronic copies of this plan sheet.

OCTA
550 S. MAIN STREET
ORANGE, CA 92863

CH2M HILL
6 HUTTON CENTRE DRIVE, SUITE 700
SANTA ANA, CA 92707

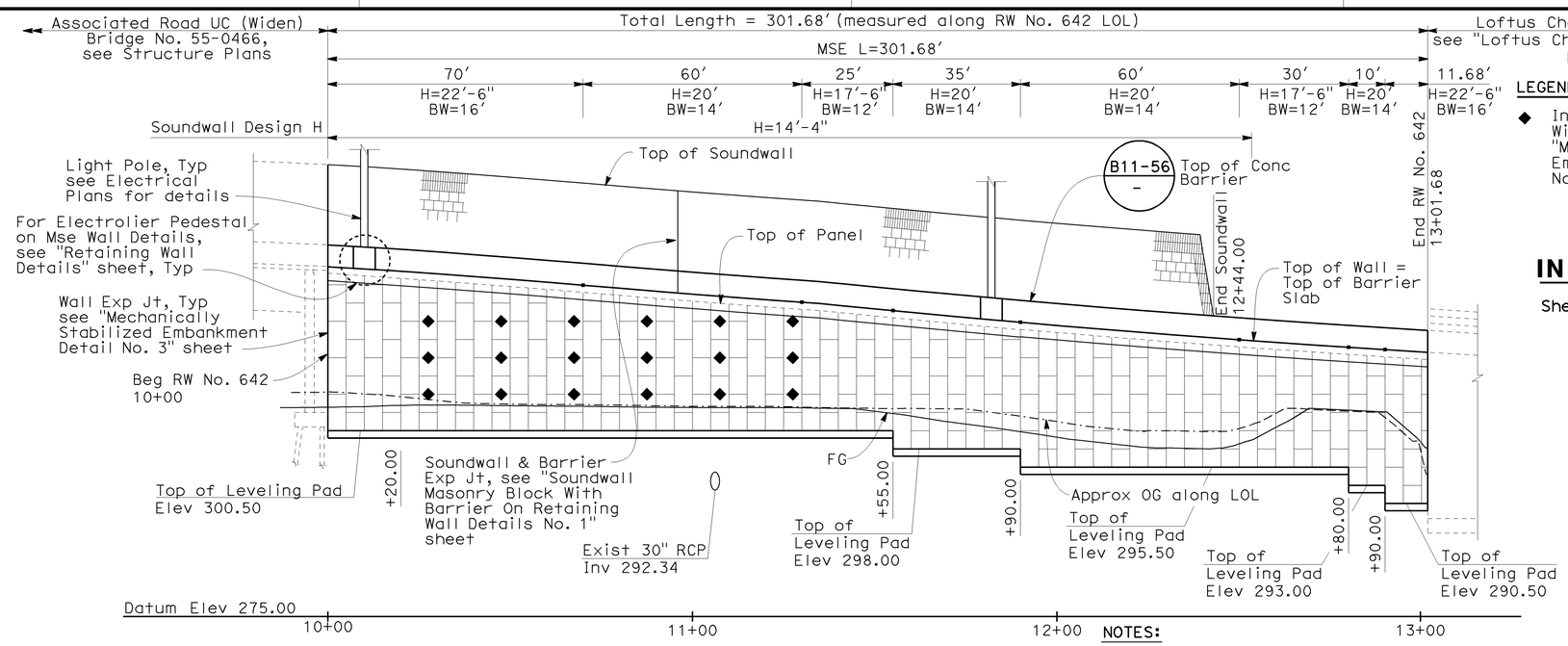

DEVELOPED ELEVATION

Horiz 1"=20′
Vert 1"=10′

LEGEND

◆ Indicates Inspection Wire, for details see "Mechanically Stabilized Embankment Details No. 3" sheet.

NOTES:

1. Contractor to field verify all utility locations prior to retaining wall construction.
2. For Typical Sections and Retaining Wall Elevation Table, see "Typical Sections" sheet.
3. For Drainage System & Details, see Drainage Plans.

INDEX TO PLANS

Sheet No.	Title
1.	GENERAL PLAN
2.	TYPICAL SECTIONS
3.	RETAINING WALL DETAILS
4.	MECHANICALLY STABILIZED EMBANKMENT DETAIL NO. 1
5.	MECHANICALLY STABILIZED EMBANKMENT DETAIL NO. 2
6.	MECHANICALLY STABILIZED EMBANKMENT DETAIL NO. 3
7.	MECHANICALLY STABILIZED EMBANKMENT DETAIL NO. 4
8.	MECHANICALLY STABILIZED EMBANKMENT DETAIL NO. 5
9.	MECHANICALLY STABILIZED EMBANKMENT DETAIL NO. 6
10.	SOUNDWALL - MASONRY BLOCK WITH BARRIER ON RETAINING WALL DETAILS NO. 1
11.	SOUNDWALL - MASONRY BLOCK WITH BARRIER ON RETAINING WALL DETAILS NO. 2
12.	ARCHITECTURAL TREATMENT DETAILS
13.	LOG OF TEST BORINGS SHEET 1 OF 3
14.	LOG OF TEST BORINGS SHEET 2 OF 3
15.	LOG OF TEST BORINGS SHEET 3 OF 3

STANDARD PLANS DATED MAY 2006

A10A	ACRONYMS AND ABBREVIATIONS (A-L)
A10B	ACRONYMS AND ABBREVIATIONS (M-Z)
A10C	SYMBOLS (SHEET 1 OF 2)
A10D	SYMBOLS (SHEET 2 OF 2)
B0-3	BRIDGE DETAILS
B3-8	RETAINING WALL DETAILS NO. 1
B11-56	CONCRETE BARRIER TYPE 736
D102	UNDERDRAINS
ES-6A	ELECTRICAL SYSTEM (LIGHTING STANDARD, TYPES 15 AND 21)
ES-6B	ELECTRICAL SYSTEM (LIGHTING STANDARD, TYPES 15 AND 21, BARRIER RAIL MOUNTED DETAILS)

STANDARD PLAN SHEET NO.

DETAIL NO.

RETAINING WALL NO 642
QUANTITIES

EARTH RETAINING STRUCTURE (MECHANICALLY STABILIZED EARTH WALL)	4,655	SQFT
18" CAST-IN-DRILLED-HOLE CONCRETE PILING	605	LF
STRUCTURAL CONCRETE, BARRIER SLAB	125	CY
FRACTURED RIB TEXTURE	552	SQFT
SOUND WALL (BARRIER)(MASONRY BLOCK)	2,765	SQFT
CONCRETE BARRIER (TYPE 736)	58	LF
CONCRETE BARRIER (TYPE 736 MODIFIED)	244	LF

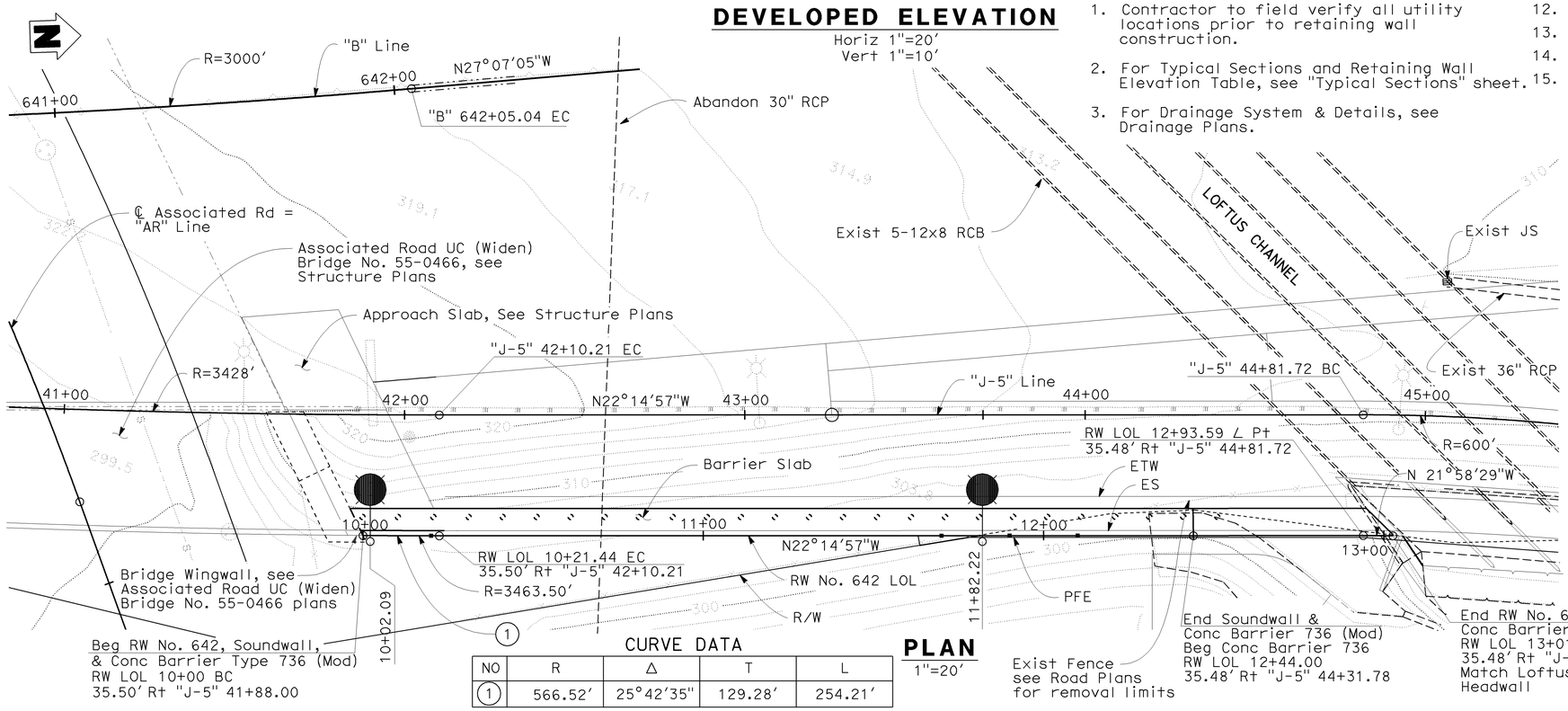

PLAN

1"=20′

CURVE DATA

NO	R	Δ	T	L
1	566.52′	25°42′35"	129.28′	254.21′

DESIGN OVERSIGHT Jon Hamaguchi 11-24-09 SIGN OFF DATE	DESIGN	BY J. Elwood	CHECKED D. Sun	LRFD	LIVE LOADING: HL-93 AND PERMIT (P-15) DESIGN LOAD		
	DETAILS	BY P. Walker	CHECKED D. Sun	LAYOUT	BY P. Walker	CHECKED M. Atiqullah	
	QUANTITIES	BY L. Ros	CHECKED B. Ho	SPECIFICATIONS	BY M. Remolador	PLANS AND SPECS COMPARED M. Atiqullah	

PREPARED FOR THE STATE OF CALIFORNIA DEPARTMENT OF TRANSPORTATION

Ayman Salama
PROJECT ENGINEER

CU 12220
EA 0F0321

BRIDGE NO. 55E0093
POST MILES 19.62

RETAINING WALL NO. 642
GENERAL PLAN

DISREGARD PRINTS BEARING EARLIER REVISION DATES

REVISION DATES (PRELIMINARY STAGE ONLY) 02/18/09 04/07/09 04/17/09 06/08/09

SHEET 1 OF 15

DESIGN GENERAL PLAN SHEET (ENGLISH) (REV. 2/25/05)

ORIGINAL SCALE IN INCHES FOR REDUCED PLANS 0 1 2 3

FILE => 55e0093-a-gp01.dgn

USERNAME => rrcarol DATE PLOTTED => 25-JAN-2010 TIME PLOTTED => 13:30

DIST	COUNTY	ROUTE	POST MILES TOTAL PROJECT	SHEET No	TOTAL SHEETS
12	Ora	57	18.4/20.9	764	856

REGISTERED CIVIL ENGINEER 06/08/09 DATE

1-25-10
PLANS APPROVAL DATE

REGISTERED PROFESSIONAL ENGINEER JENNIFER L. ELWOOD No. C64034 Exp. 9/30/10 CIVIL STATE OF CALIFORNIA

The State of California or its officers or agents shall not be responsible for the accuracy or completeness of electronic copies of this plan sheet.

OCTA
550 S. MAIN STREET
ORANGE, CA 92863

CH2M HILL
6 HUTTON CENTRE DRIVE, SUITE 700
SANTA ANA, CA 92707

WELDED WIRE MAT SCHEDULE (LOADING CASE 1)

MAXIMUM HEIGHT	10	12.5	15	17.5	20	22.5	25
MINIMUM BASE WIDTH	8	9	11	12	14	16	18
TOP LEVELS OF MESH OVER	2 @ W11 x W11 + 6" x 9" 2 @ W11 x W11 + 6" x 12"	2 @ W11 x W11 + 6" x 9" 2 @ W11 x W11 + 6" x 12" 1 @ W11 x W11 + 6" x 18"	2 @ W11 x W11 + 6" x 9" 2 @ W11 x W11 + 6" x 12" 1 @ W11 x W11 + 6" x 18" 1 @ W11 x W11 + 6" x 24"	2 @ W11 x W11 + 6" x 9" 2 @ W11 x W11 + 6" x 12" 1 @ W11 x W11 + 6" x 18" 2 @ W11 x W11 + 6" x 24"	2 @ W11 x W11 + 6" x 9" 3 @ W11 x W11 + 6" x 18" 3 @ W11 x W11 + 6" x 24"	5 @ W11 x W11 + 6" x 18" 4 @ W11 x W11 + 6" x 24"	5 @ W11 x W11 + 6" x 18" 5 @ W11 x W11 + 6" x 24"

LEGEND

2 @ W11 x W11 + 6" x 9"

- Longitudinal wire spacing X Transverse wire spacing
- Longitudinal wire size X Transverse wire size
- Number of welded wire mats.

MSE NOTES:

1. For design height "H", base width "BW", see "General Plan" sheets. For limits of excavation & backfill, see "Mechanically Stabilized Embankment Details No. 6" sheet.
2. For Barrier slab details, see "Mechanically Stabilized Embankment Details No. 4 & 5" sheets.
3. For panel details, see "Mechanically Stabilized Embankment Details No. 1" sheet.
4. For General Notes and wire mat details, see "Mechanically Stabilized Embankment Details No. 2" sheet.
5. ◆ Indicates locations of inspection wires. For inspection wire details, see "Mechanically Stabilized Embankment Details No. 3" sheet.
6. Spacing between CIDH Piles is at 10'-0" maximum. Contractor must revise the spacing of CIDH piles before drilling so the pile remains minimum 4'-0" clear from the existing utilities.
7. The MSE Wall Designer/Manufacturer should verify the (BW) value based on additional surcharge applied from the sound wall.

RETAINING WALL ELEVATIONS

RW NO. 642 LOL STA	TOP OF WALL ELEV	FG ELEV
10+00	322.95	303.82
10+10	322.67	303.90
10+20	322.36	304.07
10+30	322.00	304.12
10+40	321.62	304.09
10+50	321.23	304.04
10+60	320.82	304.01
10+70	320.39	303.97
10+80	319.95	303.90
10+90	319.52	303.83
11+00	319.10	303.78
11+10	318.70	303.77
11+20	318.30	303.77
11+30	317.85	303.76
11+40	317.33	303.67
11+50	316.82	303.33
11+60	316.32	302.70
11+70	315.83	301.90
11+80	315.35	301.25
11+90	314.89	300.54
12+00	314.43	299.79
12+10	313.99	299.13
12+20	313.56	298.58
12+30	313.14	298.24
12+40	312.73	298.14
12+50	312.33	298.64
12+60	311.94	300.82
12+70	311.57	303.63
12+80	311.20	303.45
12+90	310.85	303.21
13+01.68	310.43	299.48

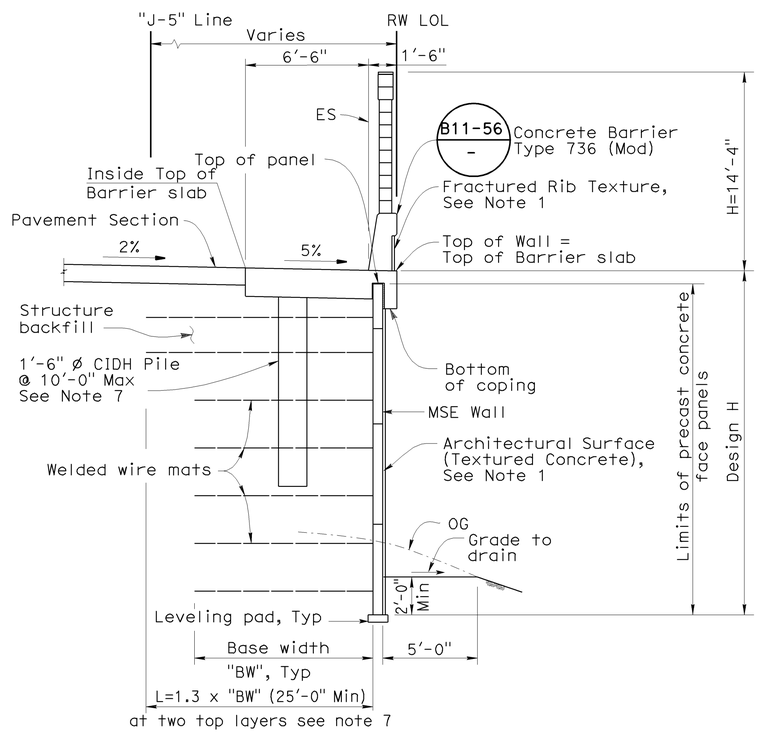

MSE WALL TYPICAL SECTION

1/4"=1'-0"

Sta 10+00.00 to 12+44.00

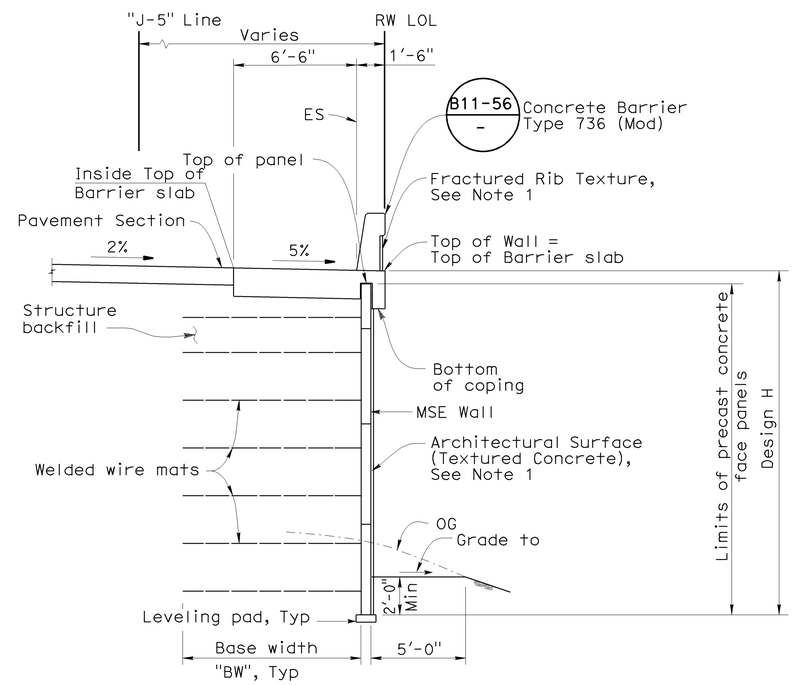

MSE WALL TYPICAL SECTION

1/4"=1'-0"

Sta 12+44.00 to 13+01.68

NOTE:

1. For Fractured Rib Texture & Architectural Surface (Textured Concrete) details, see "Architectural Treatment Details" sheet.

DESIGN OVERSIGHT Jon Hamaguchi
11-24-09
SIGN OFF DATE

	BY	CHECKED
DESIGN	J. Elwood	D. Sun
DETAILS	P. Walker	D. Sun
QUANTITIES	L. Ros	B. Ho

PREPARED FOR THE STATE OF CALIFORNIA DEPARTMENT OF TRANSPORTATION

Ayman Salama
PROJECT ENGINEER

BRIDGE NO. 55E0093
POST MILE 19.62

RETAINING WALL NO. 642
TYPICAL SECTIONS

DESIGN DETAIL SHEET (ENGLISH) (REV. 2/25/05)

ORIGINAL SCALE IN INCHES FOR REDUCED PLANS 0 1 2 3

CU 12220
EA 0F0321

DISREGARD PRINTS BEARING EARLIER REVISION DATES

REVISION DATES (PRELIMINARY STAGE ONLY) 02/18/09 04/07/09 04/17/09 06/08/09

SHEET 2 OF 15

FILE => 55e0093-a-ts01.dgn

USERNAME => frcarol DATE PLOTTED => 25-JAN-2010 TIME PLOTTED => 13:53

DIST	COUNTY	ROUTE	POST MILES TOTAL PROJECT	SHEET No	TOTAL SHEETS
12	Ora	57	18.4/20.9	765	856

REGISTERED CIVIL ENGINEER 06/08/09 DATE

1-25-10
PLANS APPROVAL DATE

REGISTERED PROFESSIONAL ENGINEER
MOHAMMED ATIQULLAH
No. C47027
Exp. 12/31/09
CIVIL
STATE OF CALIFORNIA

The State of California or its officers or agents shall not be responsible for the accuracy or completeness of electronic copies of this plan sheet.

OCTA
550 S. MAIN STREET
ORANGE, CA 92863

CH2M HILL
6 HUTTON CENTRE DRIVE, SUITE 700
SANTA ANA, CA 92707

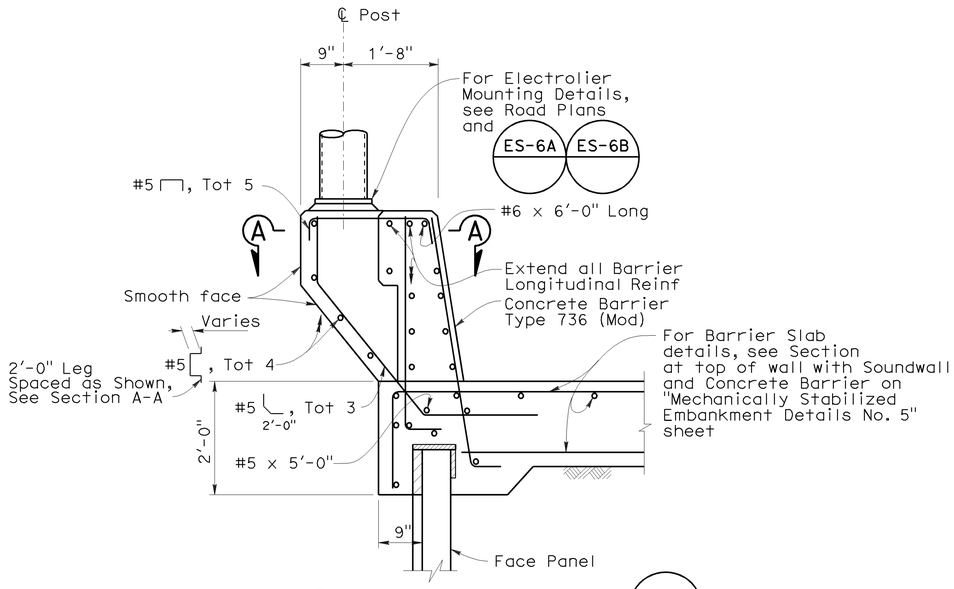

Note: For additional information, see B11-56

ELECTROLIER PEDESTAL ON MSE WALL

3/4" = 1'-0"

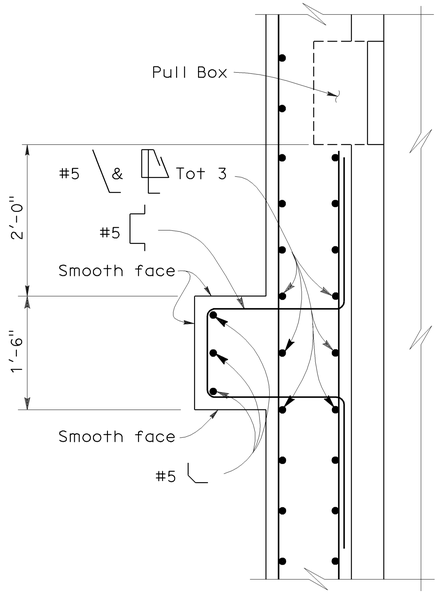

SECTION A-A

1" = 1'-0"

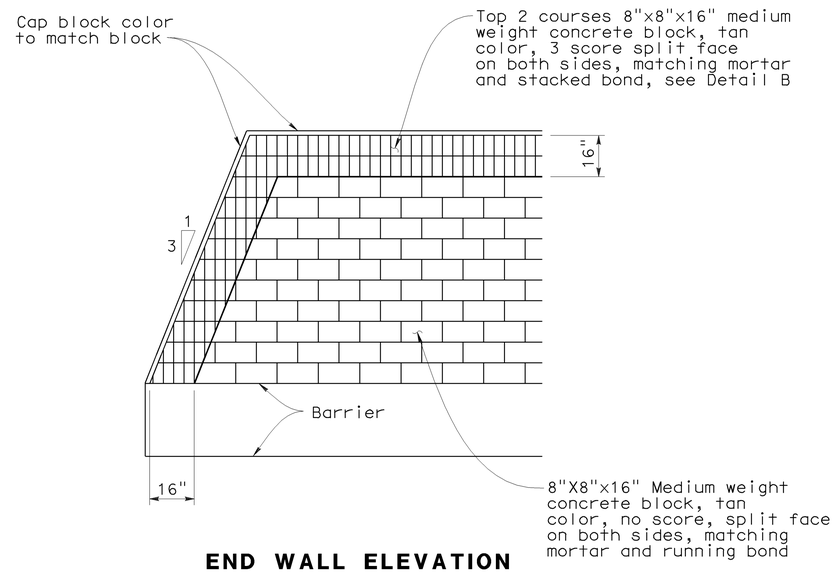

END WALL ELEVATION

CONCRETE BLOCK TYPE, COLOR AND PLACEMENT

No Scale

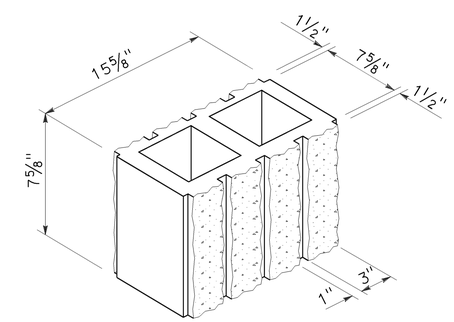

DETAIL B

No Scale

8" Wide 3-Score split face both sides

DESIGN	BY M. Atiqullah	CHECKED E. Cutler	
DETAILS	BY M. Atiqullah	CHECKED E. Cutler	
QUANTITIES	BY L. Ros	CHECKED B. Ho	

DESIGN OVERSIGHT Jon Hamaguchi
11-24-09
SIGN OFF DATE

PREPARED FOR THE STATE OF CALIFORNIA DEPARTMENT OF TRANSPORTATION

Ayman Salama
PROJECT ENGINEER

BRIDGE NO. 55E0093
POST MILE 19.62

RETAINING WALL NO. 642
RETAINING WALL DETAILS

DESIGN DETAIL SHEET (ENGLISH) (REV. 2/25/05)

ORIGINAL SCALE IN INCHES FOR REDUCED PLANS 0 1 2 3

CU 12220
EA 0F0321

DISREGARD PRINTS BEARING EARLIER REVISION DATES

REVISION DATES (PRELIMINARY STAGE ONLY) 04/17/09 06/08/09

SHEET 3 OF 15

FILE => 55e0093-g-det01.dgn

USERNAME => rrcarol DATE PLOTTED => 25-JAN-2010 TIME PLOTTED => 13:53

DIST.	COUNTY	ROUTE	POST MILES TOTAL PROJECT	SHEET NO.	TOTAL SHEETS
12	Ora	57	18.4/20.9	766	856

Jennifer Elwood 06/08/09
REGISTERED ENGINEER - CIVIL DATE

1-25-10
PLANS APPROVAL DATE

REGISTERED PROFESSIONAL ENGINEER JENNIFER L. ELWOOD No. C64034 Exp. 9/30/10 CIVIL STATE OF CALIFORNIA

The State of California or its officers or agents shall not be responsible for the accuracy or completeness of electronic copies of this plan sheet.

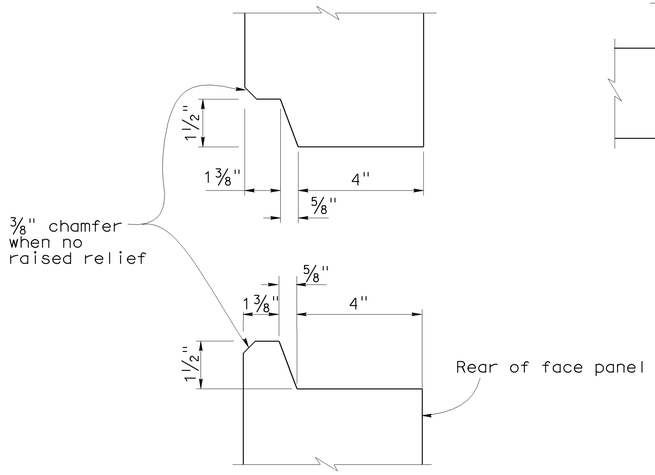

HORIZONTAL JOINT DETAIL
No Scale

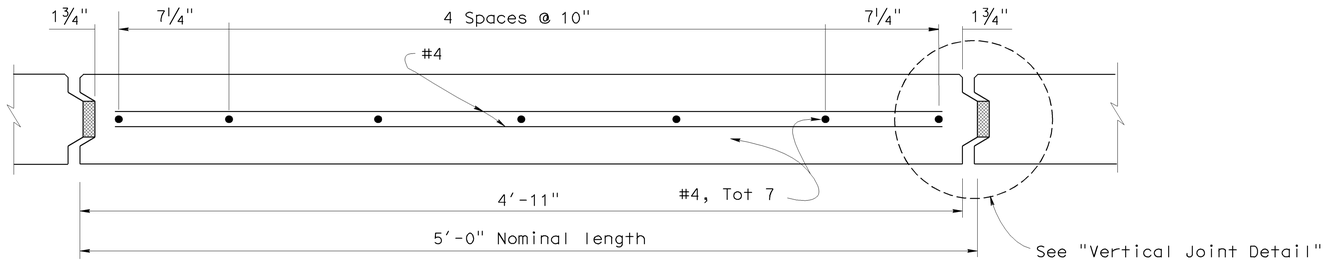

PLAN - FACE PANEL
No Scale

NOTES:

1. Architectural treatment not shown. Architectural Surface (Textured Concrete) extends beyond face of panel. See "Architectural Treatment Details" sheet.
2. Place reinforced elastomeric bearing pads in all of the panel joints between the panels. Place one in each vertical joint where the horizontal joint intersects it. Place two per panel in each horizontal joint.
   3/4" x 2 3/8" x 6" for vertical joints
   3/4" x 4" x 6" for horizontal joints.
3. Bond a strip of filter fabric, 1' - 0" wide, over the full length of all panel joints.

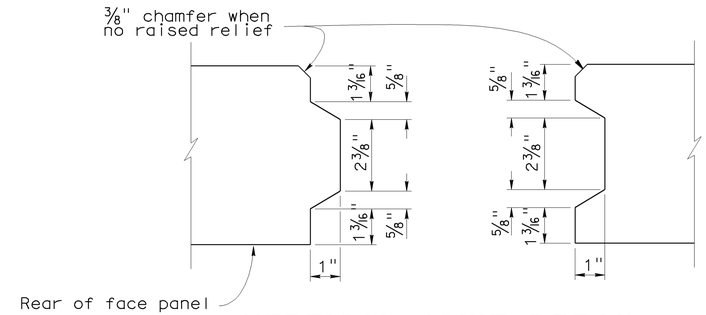

VERTICAL JOINT DETAIL
No Scale

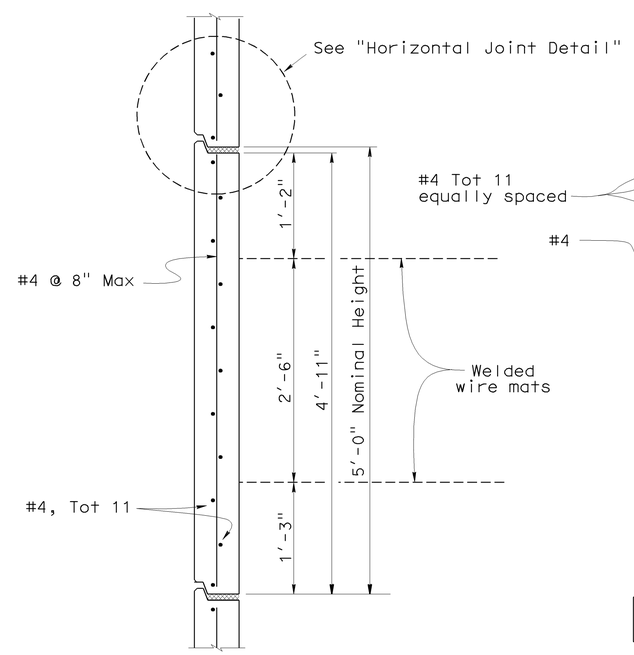

INTERMEDIATE PANEL
No Scale

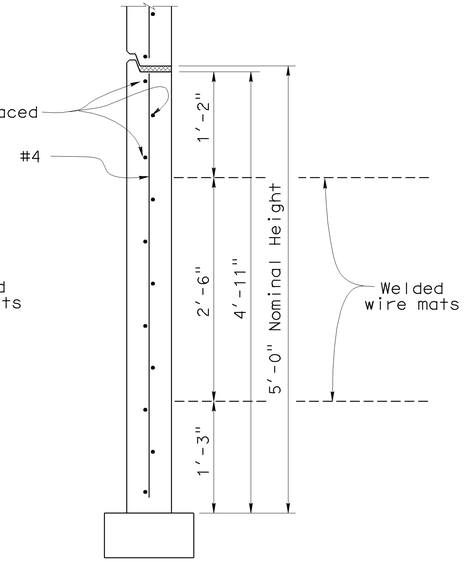

BOTTOM PANEL
No Scale

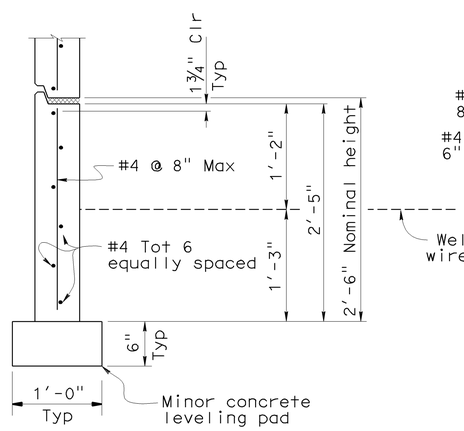

BOTTOM HALF PANEL
No Scale

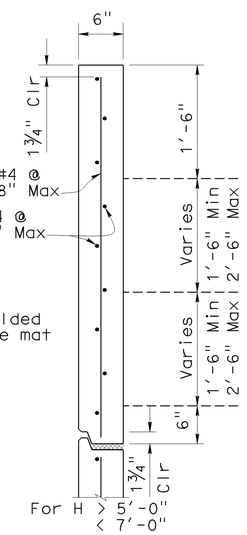

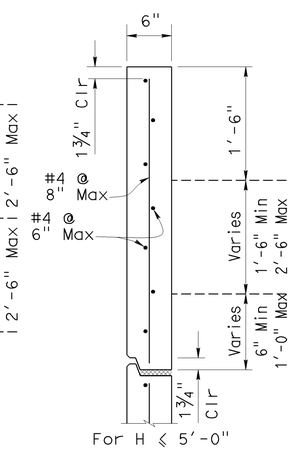

TOP PANEL
No Scale

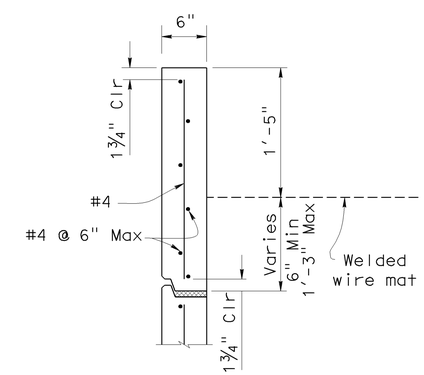

TOP HALF PANEL
No Scale

SPECIAL DETAILS

STANDARD DRAWING

FILE NO. xs13-020-1e

APPROVED BY K. GRISWELL — RESPONSIBLE TECHNICAL SPECIALIST
APPROVAL DATE REVISED

RELEASED BY ROBERTO LACALLE — RESPONSIBLE OFFICE CHIEF
RELEASE DATE REVISED

1 Added Top Panel Details
2 Revised Note

STATE OF CALIFORNIA DEPARTMENT OF TRANSPORTATION

DIVISION OF ENGINEERING SERVICES

BRIDGE NO. 55E0093
POST MILE 19.62

RETAINING WALL NO. 642
MECHANICALLY STABILIZED EMBANKMENT
DETAIL NO. 1

DS OSD 2147A (ENGLISH STANDARD DRAWING "XS" BORDER REV. 01/11/08)

ORIGINAL SCALE IN INCHES FOR REDUCED PLANS 0 1 2 3

CU 12220
EA 0F0321

DISREGARD PRINTS BEARING EARLIER REVISION DATES 02/18/09 04/07/09 04/17/09 06/08/09

REVISION DATES (PRELIMINARY STAGE ONLY)

SHEET 4 OF 15

USERNAME => trcarol

55e0093-g-msedt01.dgn

DATE PLOTTED => 25-JAN-2010 TIME PLOTTED => 13:53

DIST.	COUNTY	ROUTE	POST MILES TOTAL PROJECT	SHEET NO.	TOTAL SHEETS
12	Ora	57	18.4/20.9	767	856

Jennifer Elwood 06/08/09
REGISTERED ENGINEER - CIVIL DATE

1-25-10
PLANS APPROVAL DATE

REGISTERED PROFESSIONAL ENGINEER JENNIFER L. ELWOOD No. C64034 Exp. 9/30/10 CIVIL STATE OF CALIFORNIA

The State of California or its officers or agents shall not be responsible for the accuracy or completeness of electronic copies of this plan sheet.

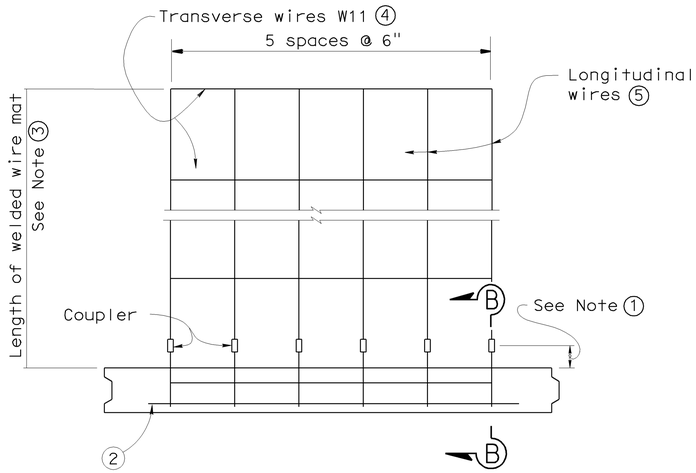

PLAN OF PANEL WITH WELDED WIRE MAT

No scale

GENERAL NOTES (MSE WALLS)

Live loading: Surcharge = 240 lb/ft^2

Soil parameters:

Internal design ϕ = 34°, γ = 120 lb/ft^3
External design ϕ(Backfill) = 34°, γ = 120 lb/ft^3
ϕ(Foundation) = 30°

Precast concrete panels:

f'c = 4,000 psi (Concrete compressive strength at 28 days)
fy = 60,000 psi (Yield strength of reinforcement)

Soil reinforcement:

Welded wire mats: fy = 65,000 psi (Yield strength)
Coupler: fy = 36,000 psi (Yield strength)
Corrosion rate = 1.1 mils/year

Reinforced concrete:

f'c = 3,600 psi, except as noted
(Concrete compressive strength at 28 days)
fy = 60,000 psi (Yield strength of reinforcement)

MSE = Mechanically stabilized embankment

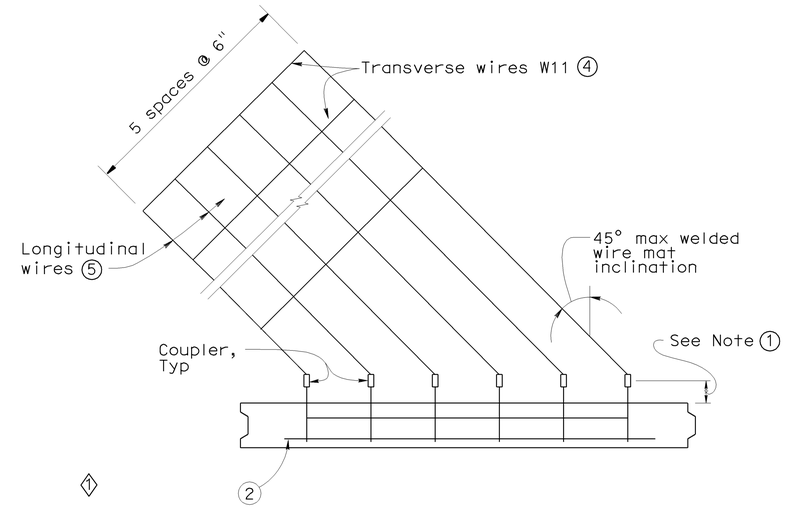

1

PLAN OF PANEL NEAR LOFTUS CHANNEL WITH WELDED WIRE MAT

No scale

NOTES:

① Distance as required to permit coupler to be swaged.

② Place #4 bar, 3' - 2" long, centered on connector mat, but not welded to it.

③ Length equals "Base width" of wall, except it shall not be less than 16' for the top 2 levels of mats at the top of the wall.

④ All Transverse Wires size W11 at various spacings as shown elsewhere in plans.

⑤ All Longitudinal Wires at 6" spacing, of various sizes, as shown elsewhere in plans.

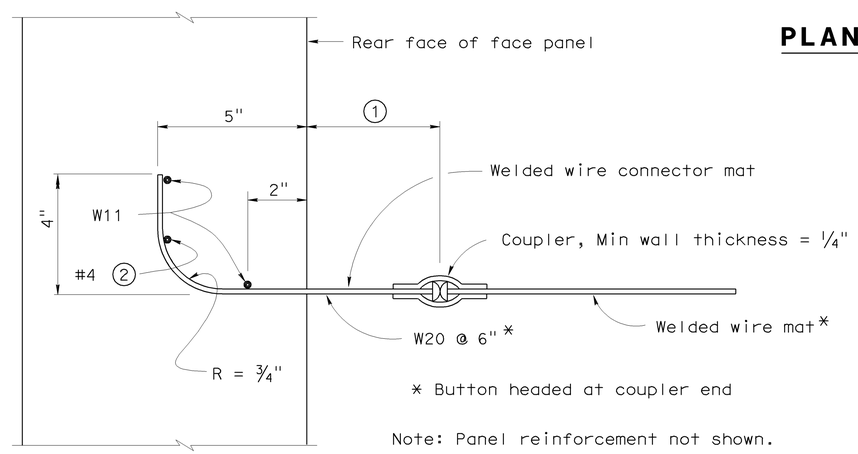

Note: Panel reinforcement not shown.

SECTION B-B

No scale

SPECIAL DETAILS

RETAINING WALL NO. 642

MECHANICALLY STABILIZED EMBANKMENT

DETAIL NO. 2

STANDARD DRAWING

FILE NO. xs13-020-2e

APPROVED BY K. GRISWELL
RESPONSIBLE TECHNICAL SPECIALIST
APPROVAL DATE 5-6-08

RELEASED BY ROBERTO LACALLE
RESPONSIBLE OFFICE CHIEF
RELEASE DATE 5-6-08

1 Added detail

STATE OF CALIFORNIA
DEPARTMENT OF TRANSPORTATION

DIVISION OF ENGINEERING SERVICES

BRIDGE NO. 55E0093
POST MILE 19.62

CU 12220
EA 0F0321

DISREGARD PRINTS BEARING EARLIER REVISION DATES
REVISION DATES (PRELIMINARY STAGE ONLY) 02/18/09 04/07/09 04/17/09 06/08/09

SHEET 5 OF 15

DS OSD 2147A (ENGLISH STANDARD DRAWING "XS" BORDER REV. 01/11/08)

ORIGINAL SCALE IN INCHES FOR REDUCED PLANS 0 1 2 3

USERNAME => trcarol

DATE PLOTTED => 25-JAN-2010 TIME PLOTTED => 13:53

55e0093-g-msedt02.dgn

DIST.	COUNTY	ROUTE	POST MILES TOTAL PROJECT	SHEET NO.	TOTAL SHEETS
12	Ora	57	18.4/20.9	768	856

REGISTERED ENGINEER - CIVIL DATE 06/08/09

1-25-10
PLANS APPROVAL DATE

REGISTERED PROFESSIONAL ENGINEER JENNIFER L. ELWOOD No. C64034 Exp. 9/30/10 CIVIL STATE OF CALIFORNIA

The State of California or its officers or agents shall not be responsible for the accuracy or completeness of electronic copies of this plan sheet.

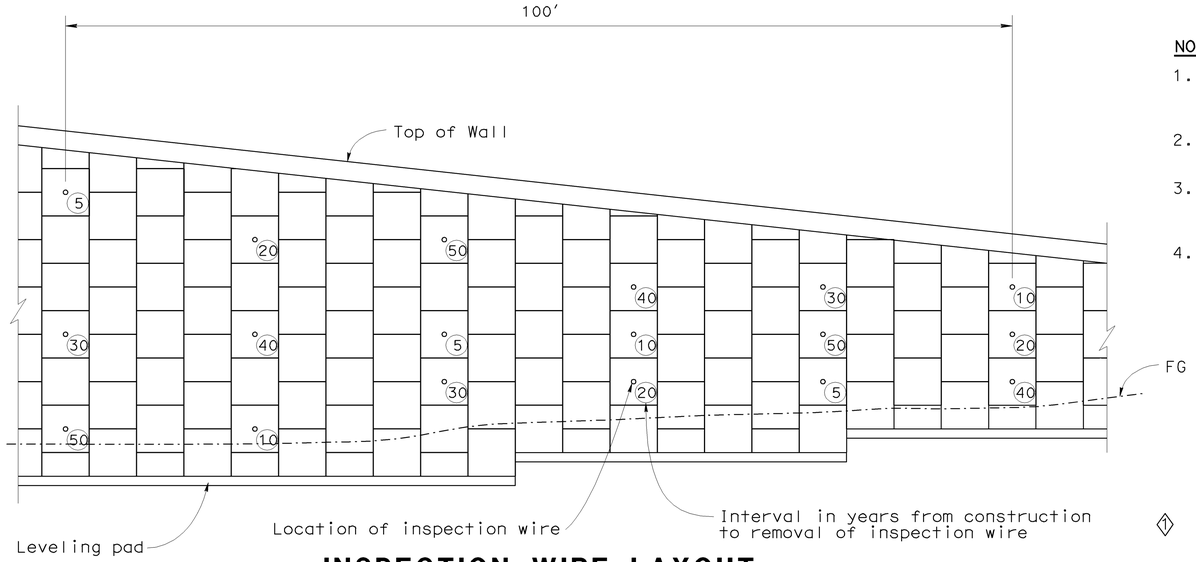

INSPECTION WIRE LAYOUT

No Scale

NOTES:

1. A set of 18 inspection wires is required for every MSE section of at least 100 feet long and a height equal to or greater than 17 feet.
2. Sets should be located approximately 500 feet apart, along the LOL.
3. Place wires in every fourth panel column along the LOL (20 feet apart) and number them according to the typical layout shown.
4. Walls which do not require a set of inspection wires based on the criteria in Note 1 shall have single level of inspection wires installed at a uniform spacing of 20 feet along this level. The location of this level shall be at the first panels above the base of the wall which will be fully exposed after completion of the wall. A minimum of 6 inspection wires shall be installed.

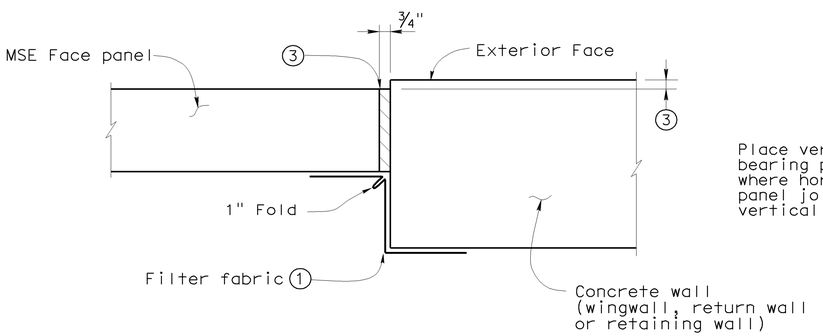

MSE FACE PANEL-TO-CONCRETE WALL JOINT DETAIL

No Scale

LEGEND

1. Bond a strip of filter fabric, 1'-6" wide, to back of MSE panels and the adjacent concrete wall for entire length of vertical joint.
2. Bond expansion joint material to the concrete wall.
3. Offset between face of MSE face panel and face of the concrete wall as dictated by location of layout lines shown elsewhere in Project Plans.

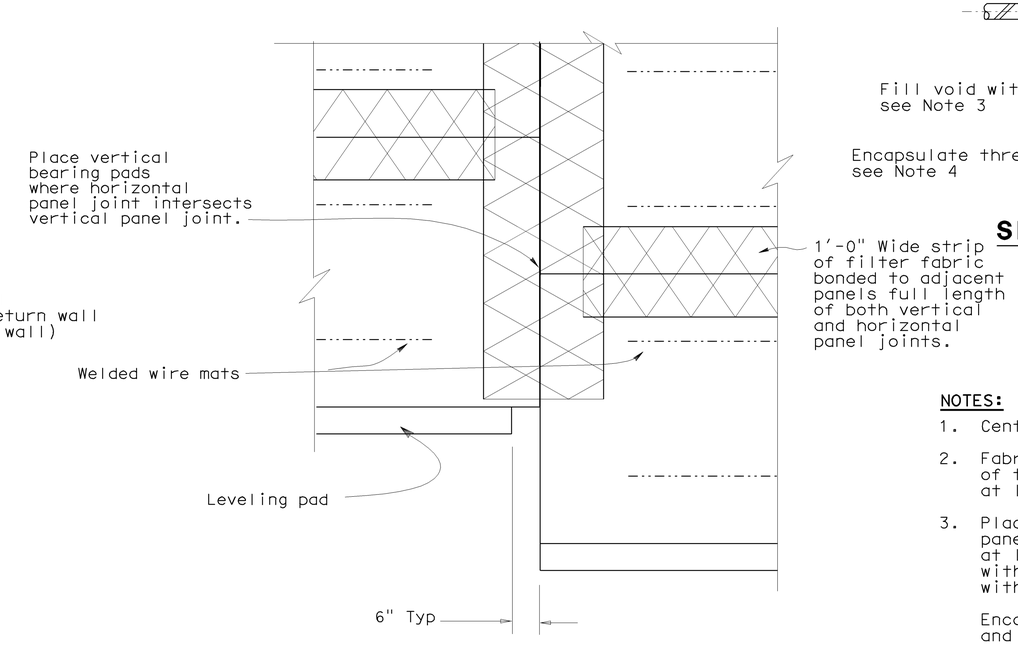

REAR ELEVATION

No Scale

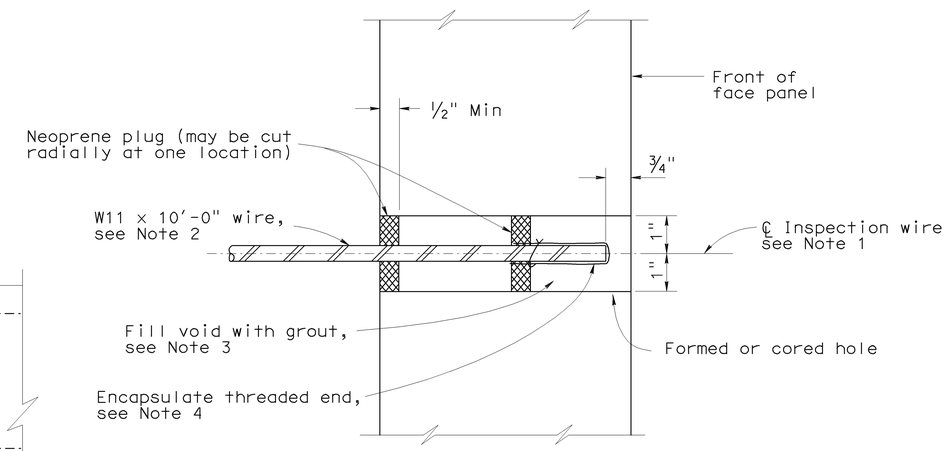

SECTION THRU INSPECTION WIRE

No Scale

NOTES:

1. Center inspection wire in face panel.
2. Fabricate inspection wires from W11 wire representative of the welded wire mats, with 3/8" dia - 16 UNC threads for at least 1 1/2" of one end.
3. Place inspection wire horizontal and perpendicular to the wall panel prior to backfilling. After backfill placement to a level at least 2'-0" above the inspection wire, dry pack opening with 1000 to 1500 psi mortar. Trowel mortar smooth and flush with face of panel.

   Encapsulate threaded end with corrosion inhibiting mastic, and secure round vinyl cover with nylon tie.
4. UNC = Unified coarse threads

SPECIAL DETAILS

RETAINING WALL NO. 642

MECHANICALLY STABILIZED EMBANKMENT

DETAIL NO. 3

STANDARD DRAWING

FILE NO. xs13-020-3e

APPROVED BY K. GRISWELL, RESPONSIBLE TECHNICAL SPECIALIST

APPROVAL DATE 5-6-08

RELEASED BY ROBERTO LACALLE, RESPONSIBLE OFFICE CHIEF

RELEASE DATE REVISED

1 Added Inspection Wire Layout & Notes from Bridge Design Aids 3-8

STATE OF CALIFORNIA DEPARTMENT OF TRANSPORTATION

DIVISION OF ENGINEERING SERVICES

BRIDGE NO. 55E0093

POST MILE 19.62

CU 12220
EA 0F0321

DISREGARD PRINTS BEARING EARLIER REVISION DATES 12/18/09 04/07/09 04/17/08 06/08/09

REVISION DATES (PRELIMINARY STAGE ONLY)

SHEET 6 OF 15

DS OSD 2147A (ENGLISH STANDARD DRAWING "XS" BORDER REV. 01/11/08)

ORIGINAL SCALE IN INCHES FOR REDUCED PLANS 0 1 2 3

USERNAME => trcarol

55e0093-g-msedt03.dgn

DATE PLOTTED => 25-JAN-2010 TIME PLOTTED => 13:53

DIST.	COUNTY	ROUTE	POST MILES TOTAL PROJECT	SHEET NO.	TOTAL SHEETS
12	Ora	57	18.4/20.9	769	856

REGISTERED ENGINEER - CIVIL DATE 06/08/09

1-25-10
PLANS APPROVAL DATE

REGISTERED PROFESSIONAL ENGINEER JENNIFER L. ELWOOD No. C64034 Exp. 9/30/10 CIVIL STATE OF CALIFORNIA

The State of California or its officers or agents shall not be responsible for the accuracy or completeness of electronic copies of this plan sheet.

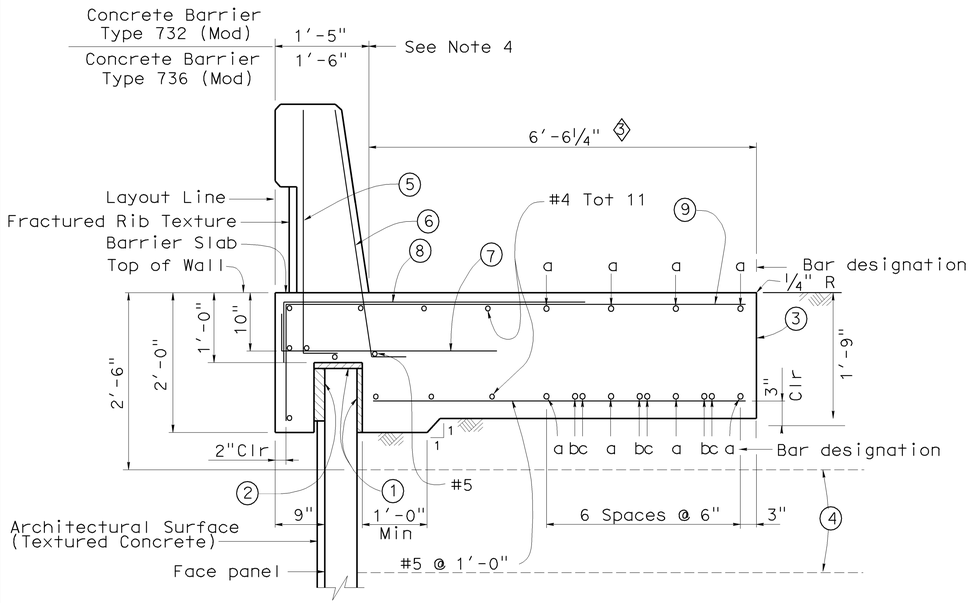

SECTION AT TOP OF WALL WITH BARRIER SLAB AND CONCRETE BARRIER

No Scale

NOTES:

1. Clearance to reinforcing steel in concrete barrier to be 1".
2. Not all barrier reinforcement shown.
3. No expansion joints in concrete barrier or barrier slab within MSE wall limits.
4. Specific concrete barrier to be utilized as shown on typical section elsewhere in Project Plans.
5. Install cable railing or chain link fence when indicated in Project Plans.

LEGEND

(1) 1" Expanded polystyrene.

(2) 2" Expanded polystyrene. Recess expanded polystyrene 2" into barrier slab.

(3) Contact joint.

(4) Welded Wire Mat Soil reinforcement.

(5) #5 6¼" @ 1'-4" (To be in place prior to barrier slab concrete).

(6) #5 6¼" @ 8" (To be in place prior to barrier slab concrete).

(7) #5 6¼" 3'-4" @ 1'-0"

(8) #5 4'-7" @ 1'-0" bundled with (9) bars.

(9) #5 5'-0" 1 1 7-3¾" @ 1'-0"

◇1 ◇1 ◇1 ◇2

SPECIAL DETAILS

RETAINING WALL NO. 642

MECHANICALLY STABILIZED EMBANKMENT

DETAIL NO. 4

STANDARD DRAWING

FILE NO. xs13-020-4e

APPROVED BY K. GRISWELL
RESPONSIBLE TECHNICAL SPECIALIST
APPROVAL DATE 5-6-08

RELEASED BY ROBERTO LACALLE
RESPONSIBLE OFFICE CHIEF
RELEASE DATE REVISED

◇1 Removed Detail
◇2 Removed Notes (10) thru (15)
◇3 Revised dimension & detail

STATE OF CALIFORNIA DEPARTMENT OF TRANSPORTATION

DIVISION OF ENGINEERING SERVICES

BRIDGE NO. 55E0093
POST MILE 19.62

CU 12220
EA 0F0321

DS OSD 2147A (ENGLISH STANDARD DRAWING "XS" BORDER REV. 01/11/08)

ORIGINAL SCALE IN INCHES FOR REDUCED PLANS 0 1 2 3

DISREGARD PRINTS BEARING EARLIER REVISION DATES

REVISION DATES (PRELIMINARY STAGE ONLY) 02/18/09 04/07/09 04/17/09 06/08/09

SHEET 7 OF 15

USERNAME => trcarol

55e0093-g-msedt04.dgn

DATE PLOTTED => 25-JAN-2010 TIME PLOTTED => 13:53

DIST.	COUNTY	ROUTE	POST MILES TOTAL PROJECT	SHEET NO.	TOTAL SHEETS
12	Ora	57	18.4/20.9	770	856

REGISTERED ENGINEER - CIVIL DATE 06/08/09

1-25-10
PLANS APPROVAL DATE

REGISTERED PROFESSIONAL ENGINEER JENNIFER L. ELWOOD No. C64034 Exp. 9/30/10 CIVIL STATE OF CALIFORNIA

The State of California or its officers or agents shall not be responsible for the accuracy or completeness of electronic copies of this plan sheet.

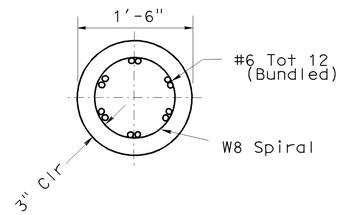

SECTION A-A
No Scale

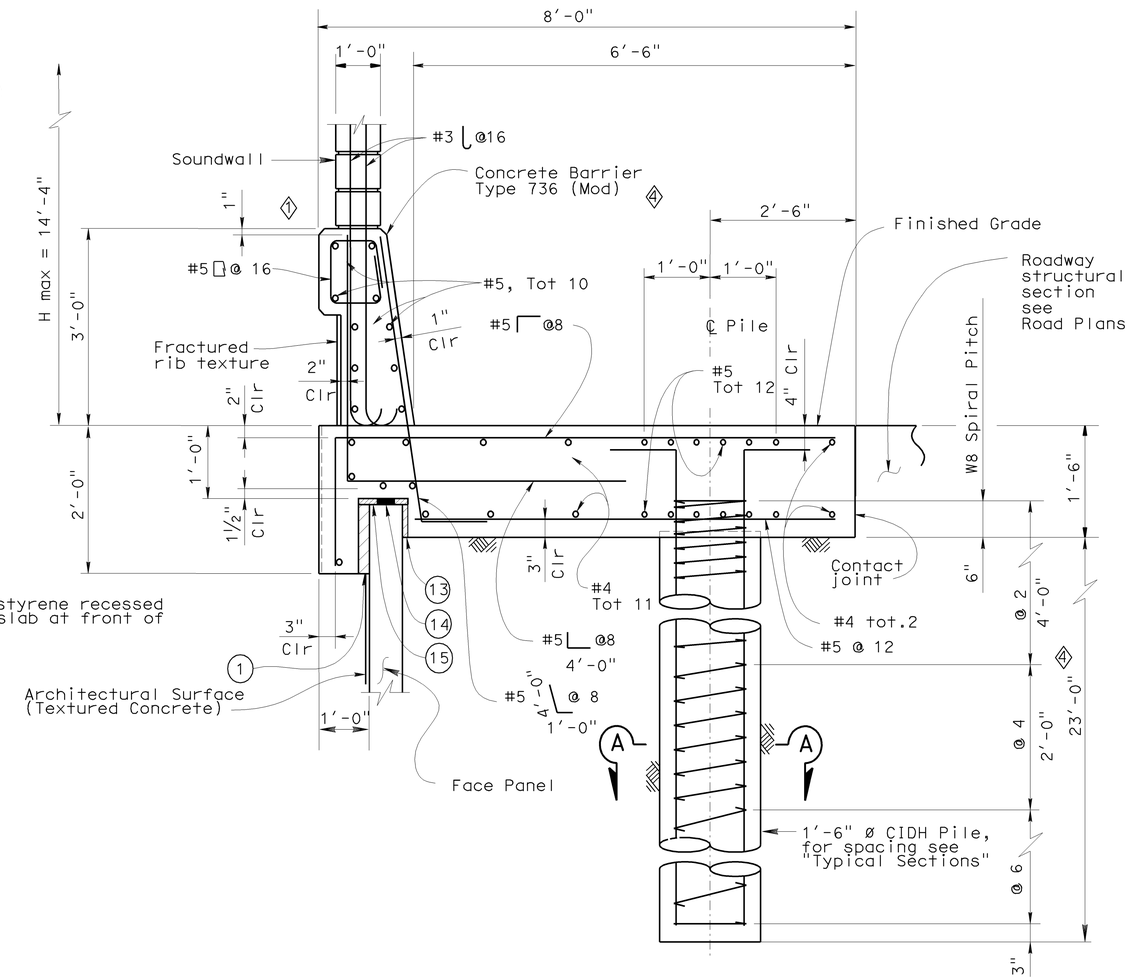

SECTION AT TOP OF WALL WITH SOUNDWALL AND CONCRETE BARRIER
No Scale

LEGEND

(1) 2" Expanded polystyrene recessed 2" into barrier slab at front of MSE face panel.

(13) 1" Expanded polystyrene.

(14) Five elastomeric bearing pads ¾" × 4" × 6" bonded to top of MSE face panel.

(15) 0.5" Expanded polystyrene.

SPECIAL DETAILS

RETAINING WALL NO. 642

MECHANICALLY STABILIZED EMBANKMENT

DETAIL NO. 5

STANDARD DRAWING

FILE NO. xs13-020-5e

APPROVED BY K. GRISWELL — RESPONSIBLE TECHNICAL SPECIALIST
APPROVAL DATE 5-6-08

RELEASED BY ROBERTO LACALLE — RESPONSIBLE OFFICE CHIEF
RELEASE DATE REVISED

1. Revised Barrier to (Type 736)
2. Removed Detail & Notes
3. Removed Notes (2) through (12)
4. Revised Dimension, Barrier & Detail

STATE OF CALIFORNIA
DEPARTMENT OF TRANSPORTATION

DIVISION OF ENGINEERING SERVICES

BRIDGE NO. 55E0093
POST MILE 19.62

CU 12220
EA 0F0321

DISREGARD PRINTS BEARING EARLIER REVISION DATES 02/18/09 04/07/09 04/17/09 06/08/09

REVISION DATES (PRELIMINARY STAGE ONLY)

SHEET 8 OF 15

DS OSD 2147A (ENGLISH STANDARD DRAWING "XS" BORDER REV. 01/11/08)

ORIGINAL SCALE IN INCHES FOR REDUCED PLANS 0 1 2 3

USERNAME => trcarol

55e0093-g-msedt05.dgn

DATE PLOTTED => 25-JAN-2010 TIME PLOTTED => 13:53

DIST.	COUNTY	ROUTE	POST MILES TOTAL PROJECT	SHEET NO.	TOTAL SHEETS
12	Ora	57	18.4/20.9	771	856

REGISTERED ENGINEER - CIVIL DATE 06/08/09

1-25-10
PLANS APPROVAL DATE

REGISTERED PROFESSIONAL ENGINEER JENNIFER L. ELWOOD No. C64034 Exp. 9/30/10 CIVIL STATE OF CALIFORNIA

The State of California or its officers or agents shall not be responsible for the accuracy or completeness of electronic copies of this plan sheet.

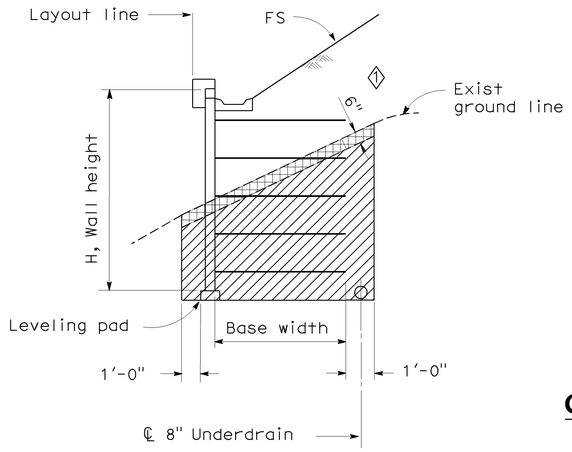

LIMITS OF EXCAVATION

No Scale

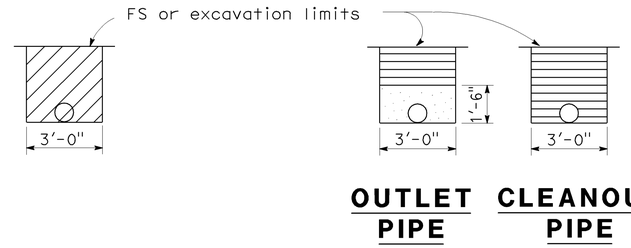

OUTLET OR CLEANOUT PIPE FOR UNDERDRAIN

No Scale

ABBREVIATIONS

OG	Original ground
FS	Planned finished surface
GP	Planned grading plane

LEGEND

- Limits of structure excavation
- Limits of structure backfill
- Limits of permeable material
- Indicates Structure Excavation (Type Y-1) (Aerially Deposited Lead)

NOTES:

1. Limits to FS except to GP when in roadway section.
2. Locate 8" perforated underdrain below bottom level of welded wire mats.
3. Maximum spacing of outlet pipes is 200 ft.
4. At sags in profile of underdrain, install outlet pipe for each direction of flow.

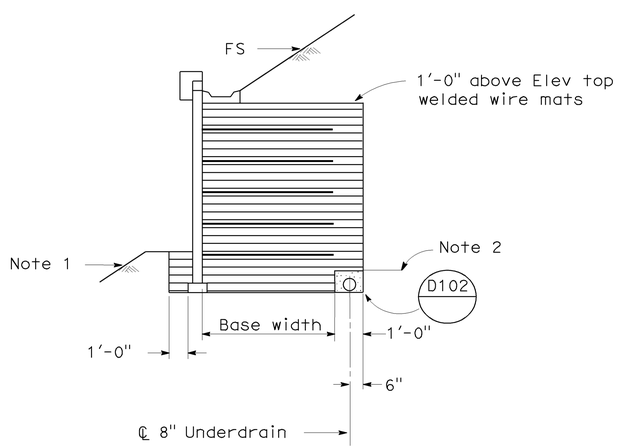

SLOPING FINISHED SURFACE

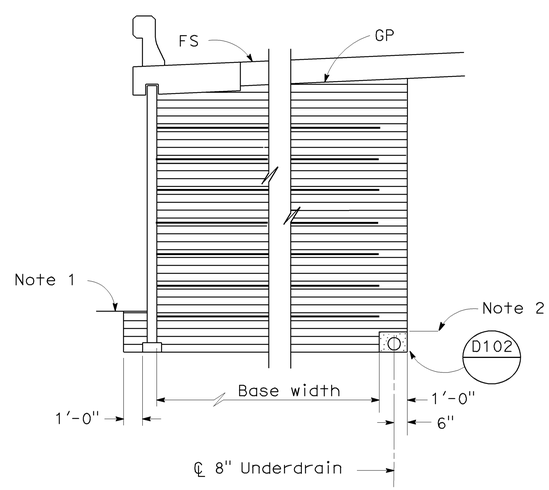

ROADWAY SECTION WITH BASE WIDTH 16' OR GREATER

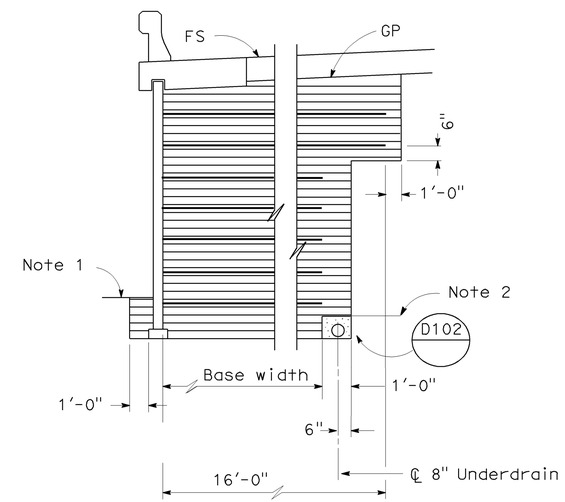

ROADWAY SECTION WITH BASE WIDTH LESS THAN 16'

LIMITS OF BACKFILL

No Scale

SPECIAL DETAILS

RETAINING WALL NO. 642

MECHANICALLY STABILIZED EMBANKMENT

DETAIL NO. 6

STANDARD DRAWING

FILE NO. xs13-020-6e

APPROVED BY K. GRISWELL — RESPONSIBLE TECHNICAL SPECIALIST
APPROVAL DATE 5-6-08

RELEASED BY ROBERTO LACALLE — RESPONSIBLE OFFICE CHIEF
RELEASE DATE REVISED

1 Added Limits of ADL Excavation
2 Added ADL Excavation Legend

STATE OF CALIFORNIA DEPARTMENT OF TRANSPORTATION

DIVISION OF ENGINEERING SERVICES

BRIDGE NO. 55E0093
POST MILE 19.62

CU 12220
EA 0F0321

DISREGARD PRINTS BEARING EARLIER REVISION DATES 02/18/09 04/07/09 04/17/09 06/08/09

REVISION DATES (PRELIMINARY STAGE ONLY)

SHEET 9 OF 15

DS OSD 2147A (ENGLISH STANDARD DRAWING "XS" BORDER REV. 01/11/08)

ORIGINAL SCALE IN INCHES FOR REDUCED PLANS 0 1 2 3

DATE PLOTTED => 25-JAN-2010 TIME PLOTTED => 13:53

USERNAME => trcarol

55e0093-g-msedt06.dgn

DIST.	COUNTY	ROUTE	POST MILES TOTAL PROJECT	SHEET NO.	TOTAL SHEETS
12	Ora	57	18.4/20.9	772	856

REGISTERED ENGINEER - CIVIL DATE 06/08/09

1-25-10
PLANS APPROVAL DATE

REGISTERED PROFESSIONAL ENGINEER JENNIFER L. ELWOOD No. C64034 Exp. 9/30/10 CIVIL STATE OF CALIFORNIA

The State of California or its officers or agents shall not be responsible for the accuracy or completeness of electronic copies of this plan sheet.

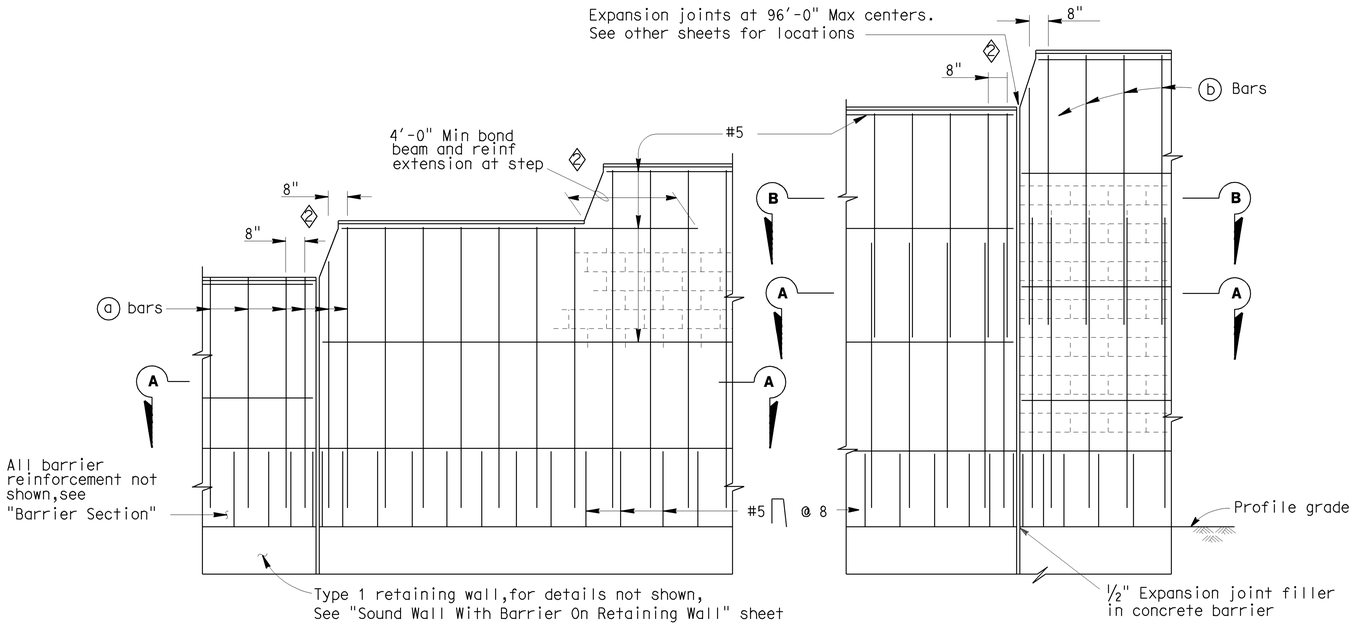

PART ELEVATIONS

No Scale

SOUNDWALL REINFORCEMENT TABLE

Maximum H	(a) Bars @ 1'-4" Max	(B) bars @ 1'-4" Max	"y"	f'm (KSI)	Compressive Strength of CMU (KSI)	Maximum H
6'-4"	# 4	———	———	1.5	1.9	6'-4"
8'-4"	# 4	———	———	1.5	1.9	8'-4"
10'-4"	# 4	———	———	1.5	1.9	10'-4"
12'-4"	# 5	# 4	5'-0"	1.5	1.9	12'-4"
14'-4"	# 6	# 4	7'-0"	1.5	1.9	14'-4"
16'-4"	# 6	# 4	9'-0"	2.5	3.7	16'-4"

Note I : For details not shown, see "Sound Wall With Barrier On Retaining Wall - Masonry Block - Details No.2" sheet.

Note II : Slope ground at traffic side of barrier to drain. Maximum slope ±10%.

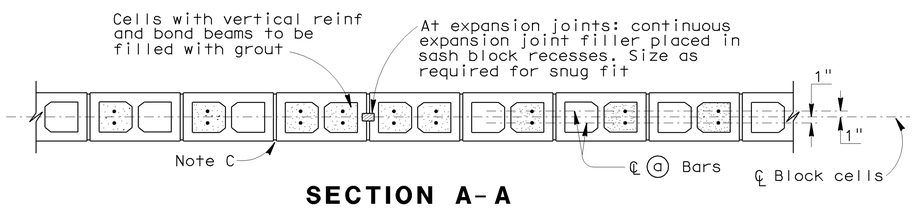

SECTION A-A

For details not shown, see other details

H=6'-4" THRU H=10'-4"

No Scale

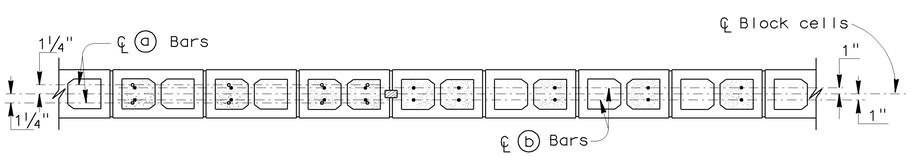

SECTION A-A

SECTION B-B

For details not shown, see other details

H=12'-4" THRU H=16'-4"

No Scale

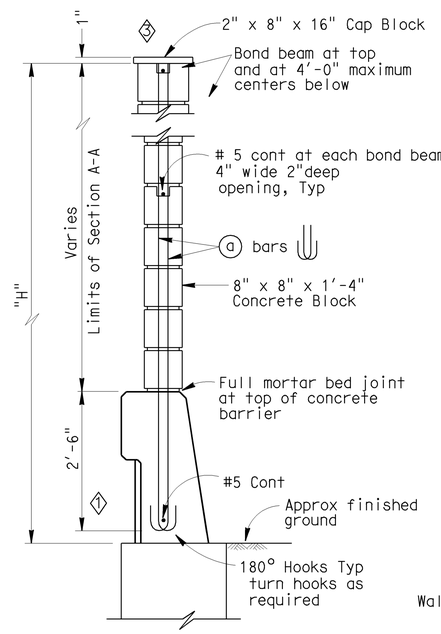

H=6'-4" THRU H=10'-4"

For details not shown, see H=12'-4" thru H=16'-4"

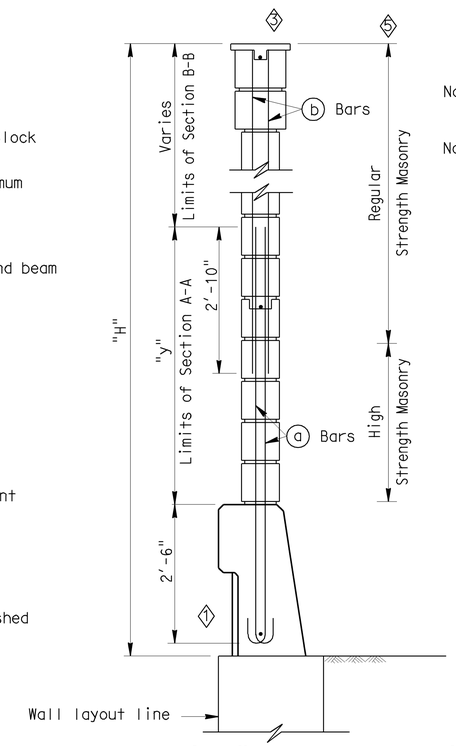

H=12'-4" THRU H=16'-4"

For details not shown, see H=6'-4" thru H=10'-4"

TYPICAL SECTIONS

No Scale

GENERAL NOTES

Note A: For type of block and joint finish, see other sheets.

Note B: When blocks are laid in stacked bond, ladder type, galvanized joint reinforcement shall be provided. A minimum of 2-9 gauge wire continuous at 4'-0" maximum to be used. Locate reinforcement in joints that are at the approximate midpoint between bond beams.

Note C: Horizontal joints shall be tooled concave or may be weathered.
Vertical joints shall be tooled concave or may be raked.

Note D: For intermediate wall heights that are between the "H's" given. Use the tabular information for the next higher "H".

Note E: Masonry strengths are listed in "SOUNDWALL REINFORCEMENT TABLE".

Note F: Class 2 concrete to be used for the barrier.

SPECIAL DETAILS

RETAINING WALL NO. 642

SOUNDWALL - MASONRY BLOCK WITH BARRIER ON RETAINING WALL

DETAILS NO. 1

STANDARD DRAWING

FILE NO. xs15-130-1e

APPROVED BY T SATTER — RESPONSIBLE TECHNICAL SPECIALIST
APPROVAL DATE 9-2-08

RELEASED BY ROBERTO LACALLE — RESPONSIBLE OFFICE CHIEF
RELEASE DATE REVISED

1 Revised Barrier
2 Revised Step
3 Revised Cap Blocks
4 Removed Note
5 Added Limits of Masonry Strength

STATE OF CALIFORNIA
DEPARTMENT OF TRANSPORTATION

DIVISION OF ENGINEERING SERVICES

BRIDGE NO. 55E0093
POST MILE 19.62

CU 12220
EA 0F0321

DISREGARD PRINTS BEARING EARLIER REVISION DATES 02/18/09 04/07/09 04/17/09 06/08/09

SHEET 10 OF 15

DS OSD 2147A (ENGLISH STANDARD DRAWING "XS" BORDER REV. 01/11/08)

ORIGINAL SCALE IN INCHES FOR REDUCED PLANS 0 1 2 3

USERNAME => trcarol

55e0093-g-SWdet01.dgn

DATE PLOTTED => 25-JAN-2010 TIME PLOTTED => 13:53

DIST.	COUNTY	ROUTE	POST MILES TOTAL PROJECT	SHEET NO.	TOTAL SHEETS
12	Ora	57	18.4/20.9	773	856

Jennifer Elwood 06/08/09
REGISTERED ENGINEER - CIVIL DATE

1-25-10
PLANS APPROVAL DATE

REGISTERED PROFESSIONAL ENGINEER
JENNIFER L. ELWOOD
No. C64034
Exp. 9/30/10
CIVIL
STATE OF CALIFORNIA

The State of California or its officers or agents shall not be responsible for the accuracy or completeness of electronic copies of this plan sheet.

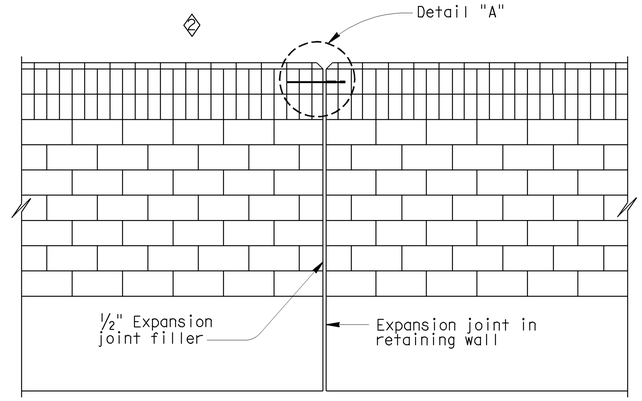

ALIGNMENT KEY DETAIL

No Scale

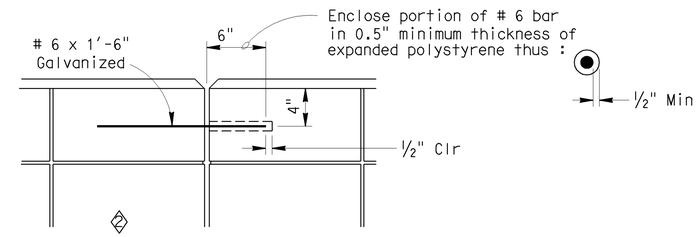

DETAIL A

No Scale

DESIGN NOTES

DESIGN

Uniform Building Code,1997 Edition and the Bridge Design Specifications.

DESIGN WIND LOAD

33 PSF

DESIGN SEISMIC LOAD

0.57 Dead load

REINFORCED CONCRETE

f'c = 3250 PSI
fy = 60 KSI

CONCRETE MASONRY

REGULAR STRENGTH	HIGH STRENGTH	
f'm = 1500 PSI	f'm = 2000 PSI	f'm = 2500 PSI
f_b = 1500 PSI	f_b = 660 PSI	f_b = 830 PSI
fs = 24.0 KSI	fs = 24.0 KSI	fs = 24000 PSI
n = 25.8	n = 19.3	n = 15.5

LOAD FACTORS AND LOAD COMBINATIONS

Working Stress Design (WSD) Percentage of unit stress

Group 1: D + E + SC 100%
Group 2: D + W + SC + E 100%
Group 3: D + 0.71 EQD + E 100%

Where:

D = Dead load
E = Lateral earth pressure
SC = Live load surcharge
W = Wind load
EQD = Seismic dead load

Load Factor Design (LFD)

Group A: βD +1.7 E + 1.7 SC
Group B: βD +1.7 E + 1.3 W
Group C: βD +1.3 E + 1.0 EQE
Group D: βD +1.3 E + 1.0 EQD
Group E: βD +1.1 E + 0.85 (EQE + EQD)

Where : β = 0.9 or 1.2, whichever controls in design
D = Dead load
E = Lateral earth pressure
SC = Live load surcharge
W = Wind load
EQD = Seismic dead load
EQE = Seismic earth load

STRENGTH REDUCTION FACTORS, Ø

Reinforced concrete:
For flexure ---------- Ø=0.90
For shear ---------- Ø=0.85

Concrete masonry:
For flexure ---------- Ø=0.80
For shear ---------- Ø=0.60

Foundations :

See "RETAINING WALL WITH SOUNDWALL" sheets.

NOTE:

I : For Barrier Section Details, see Section at Top of Wall With Soundwall and Concrete Barrier on "Mechanically Stabilized Embankment Details No. 5" sheet

SPECIAL DETAILS

RETAINING WALL NO. 642

SOUNDWALL - MASONRY BLOCK WITH BARRIER ON RETAINING WALL

DETAILS NO. 2

STANDARD DRAWING

FILE NO. xs15-130-2e

APPROVED BY T SATTER
RESPONSIBLE TECHNICAL SPECIALIST
APPROVAL DATE 4-15-08

RELEASED BY ROBERTO LACALLE
RESPONSIBLE OFFICE CHIEF
RELEASE DATE REVISED

1 Revised Barrier
2 Revised Cap Blocks
3 Removed Detail
4 Revised Dimension
4 Revised Notes

STATE OF CALIFORNIA
DEPARTMENT OF TRANSPORTATION

DIVISION OF ENGINEERING SERVICES

BRIDGE NO. 55E0093
POST MILE 19.62

DS OSD 2147A (ENGLISH STANDARD DRAWING "XS" BORDER REV. 01/11/08)

ORIGINAL SCALE IN INCHES FOR REDUCED PLANS 0 1 2 3

CU 12220
EA 0F0321

DISREGARD PRINTS BEARING EARLIER REVISION DATES 02/18/09 04/07/09 04/17/09 06/08/09

REVISION DATES (PRELIMINARY STAGE ONLY)

SHEET 11 OF 15

USERNAME => trrichf

55e0093-g-SWdet02.dgn

DATE PLOTTED => 25-JAN-2010 TIME PLOTTED => 14:25AM

DIST	COUNTY	ROUTE	POST MILES TOTAL PROJECT	SHEET No	TOTAL SHEETS
12	Ora	57	18.4/20.9	774	856

REGISTERED CIVIL ENGINEER — DATE 06/08/09

1-25-10
PLANS APPROVAL DATE

REGISTERED PROFESSIONAL ENGINEER — MOHAMMED ATIQULLAH — No. C47027 — Exp. 12/31/09 — CIVIL — STATE OF CALIFORNIA

The State of California or its officers or agents shall not be responsible for the accuracy or completeness of electronic copies of this plan sheet.

OCTA
550 S. MAIN STREET
ORANGE, CA 92863

CH2M HILL
6 HUTTON CENTRE DRIVE, SUITE 700
SANTA ANA, CA 92707

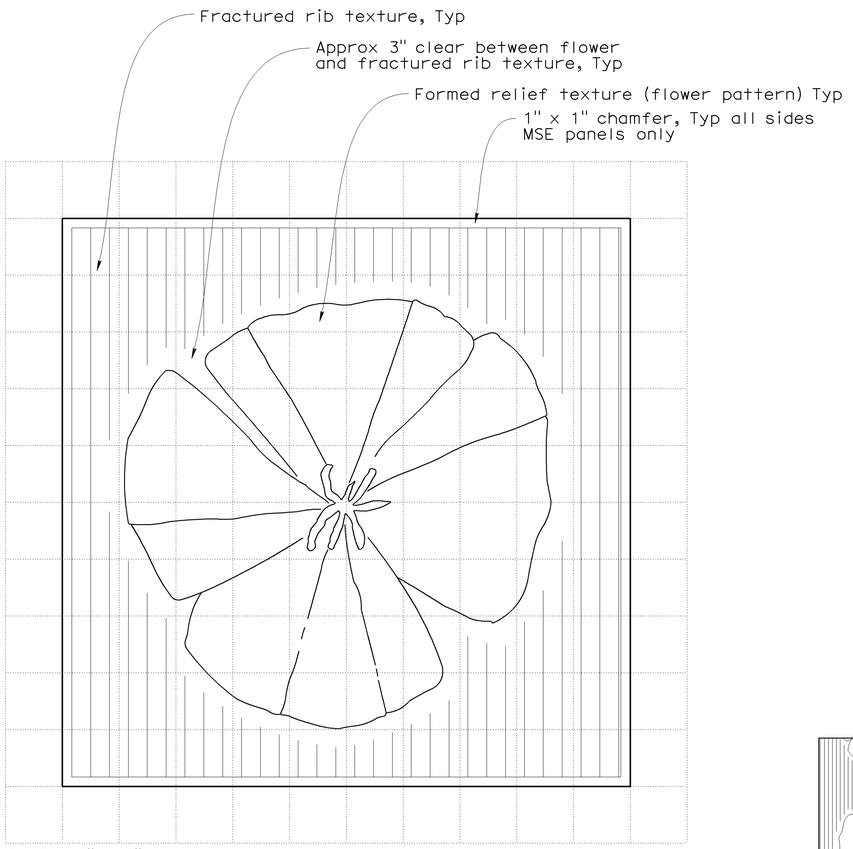

ARCHITECTURAL SURFACE (TEXTURED CONCRETE) FOR MSE PANEL

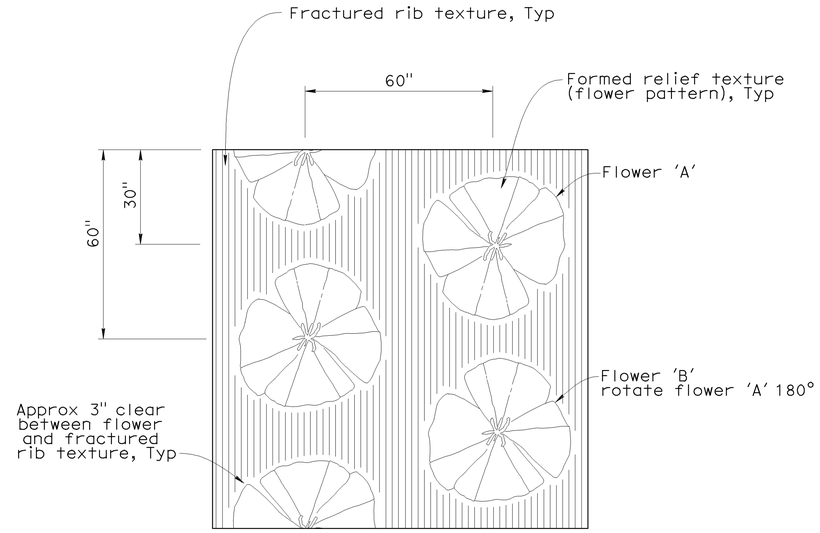

ARCHITECTURAL SURFACE (TEXTURED CONCRETE) PATTERN

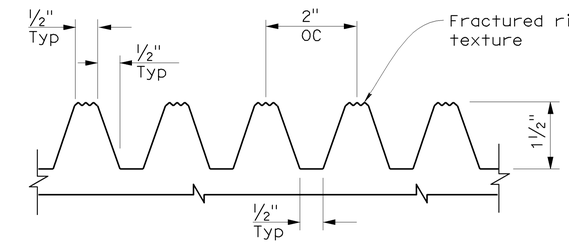

FRACTURED RIB TEXTURE DETAIL

(Elastomer Formliner)

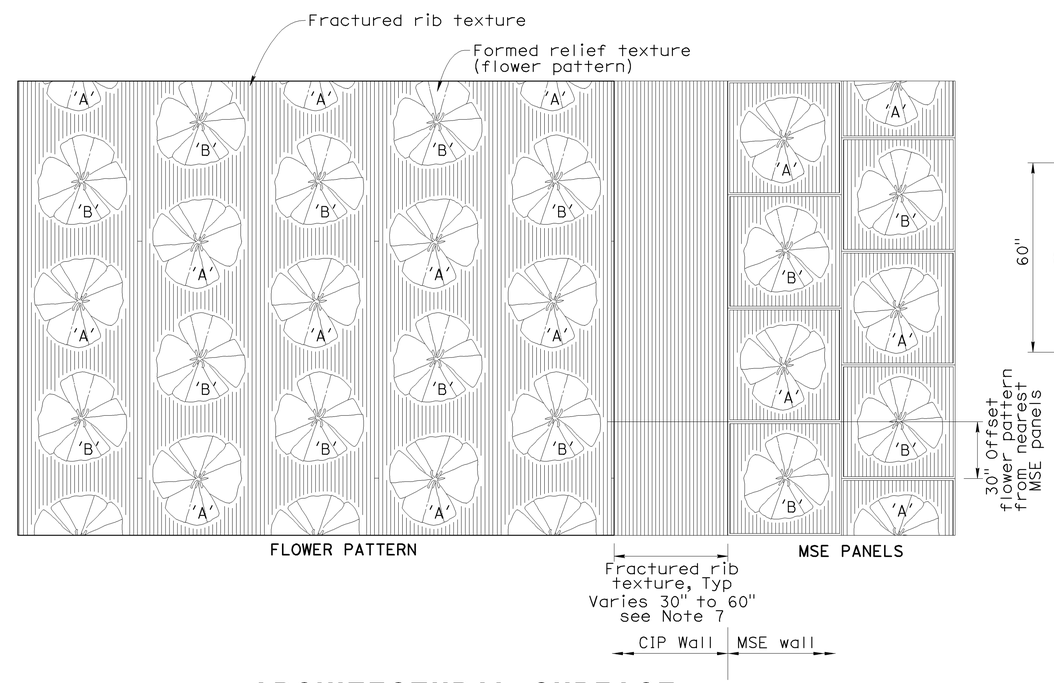

ARCHITECTURAL SURFACE (TEXTURED CONCRETE) ELEVATION

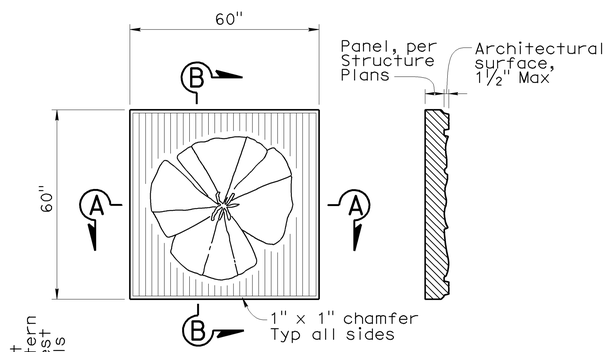

VIEW

SECTION B-B

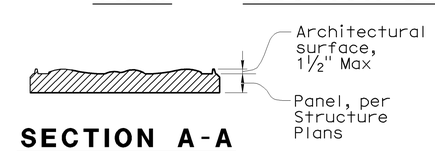

SECTION A-A

MSE PANEL

No scale

NOTES:

1. Identical flower images, scale and spacing shall be used for flower pattern and MSE wall panels.
2. Within a vertical column, flower images shall alternate between flowers 'A' and 'B'. Vertical columns shall be offset 30" from adjacent columns.
3. Where placed on walls bounded by concrete barriers, finished grade or top of wall, flower pattern shall be continued without concern for partial flower images, except as noted.
4. Refer to structural details for width of smooth band to be applied at edges of structures.
5. Where the flower pattern will be used adjacent to a horizontal limit such as a bridge abutment, adjoining MSE wall or overhead sign structure support, flower pattern shall be discontinued from a section not less than 30" and not greater than 60" wide from the horizontal limit to avoid truncation of flower images. Fractured rib texture shall be inserted in the resulting gap to create a continuous buffer between pattern areas.
6. The nearest column of flower images (flower pattern) shall be offset vertically 30" from the panels.
7. Vary fractured rib texture width (30" to 60") to provide complete flower pattern on cip wall side.

DESIGN OVERSIGHT — Jon Hamaguchi
11-24-09
SIGN OFF DATE

	BY	CHECKED
DESIGN	M. Atiqullah	E. Cutler
DETAILS	M. Atiqullah	E. Cutler
QUANTITIES	L. Ros	B. Ho

PREPARED FOR THE STATE OF CALIFORNIA DEPARTMENT OF TRANSPORTATION

Ayman Salama
PROJECT ENGINEER

BRIDGE NO. 55E0093
POST MILE 19.62

RETAINING WALL NO. 642
ARCHITECTURAL TREATMENT DETAILS

DESIGN DETAIL SHEET (ENGLISH) (REV. 2/25/05)

ORIGINAL SCALE IN INCHES FOR REDUCED PLANS 0 1 2 3

CU 12220
EA 0F0321

DISREGARD PRINTS BEARING EARLIER REVISION DATES

REVISION DATES (PRELIMINARY STAGE ONLY) 06/08/09

SHEET 12 OF 15

FILE => 55e0093-u-tarcdt01.dgn

USERNAME => trrichf DATE PLOTTED => 25-JAN-2010 TIME PLOTTED => 14:54

DIST	COUNTY	ROUTE	POST MILES TOTAL PROJECT	SHEET No	TOTAL SHEETS
12	Ora	57	18.4/20.9	775	856

GEOTECHNICAL PROFESSIONAL — DATE 06/08/09

1-25-10
PLANS APPROVAL DATE

REGISTERED PROFESSIONAL ENGINEER — HISHAM M. NOFAL No. 2765 Exp. 09/30/09 GEOTECHNICAL STATE OF CALIFORNIA

The State of California or its officers or agents shall not be responsible for the accuracy or completeness of electronic copies of this plan sheet.

OCTA
550 S. MAIN STREET
ORANGE, CA 92863

CH2M HILL
6 HUTTON CENTRE DRIVE, SUITE 700
SANTA ANA, CA 92707

BENCHMARK:

Horizontal coordinates are CCS NAD-83, Zone 6.
Vertical control based on North American Vertical Datum 1988.
Pt 1068: N2277999.248, E6066394.642, Elev 310.252
Pt 1069: N2278210.836, E6066285.157, Elev 305.442

SAMPLER TYPES:

California modified ring sampler
standard penetration test sampler

HAMMER TYPE:

Automatic hammer

CORRECTION FACTOR:

To convert from California modified ring sampler blow count to equivalent standard penetration test sampler blow count, for granular and cohesive soil, multiply by 0.67.

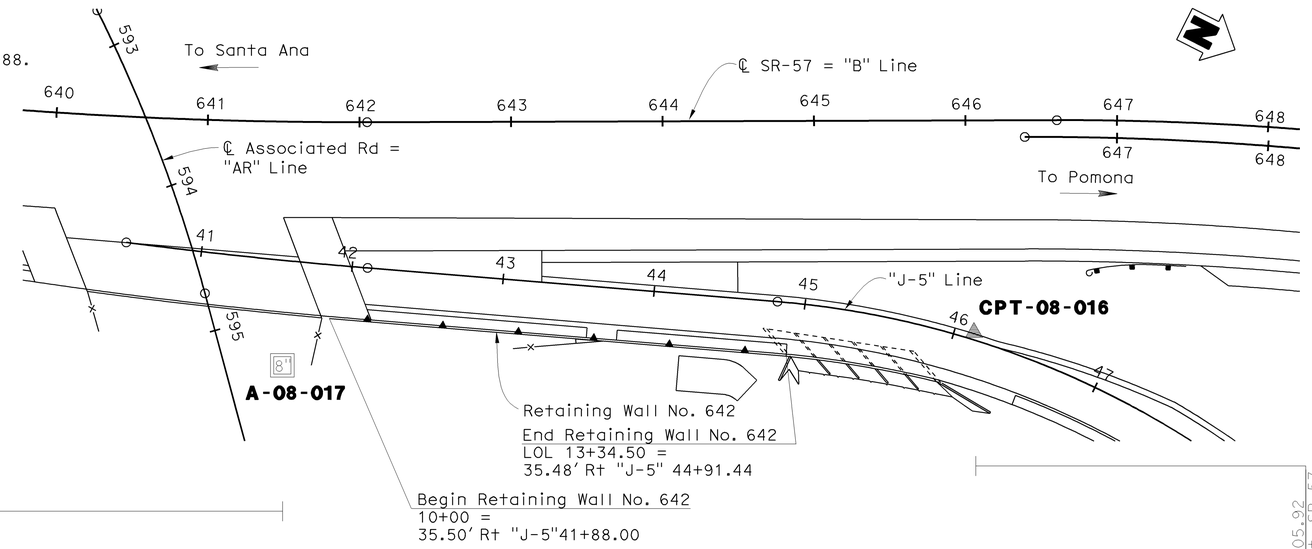

PLAN
1"=50'

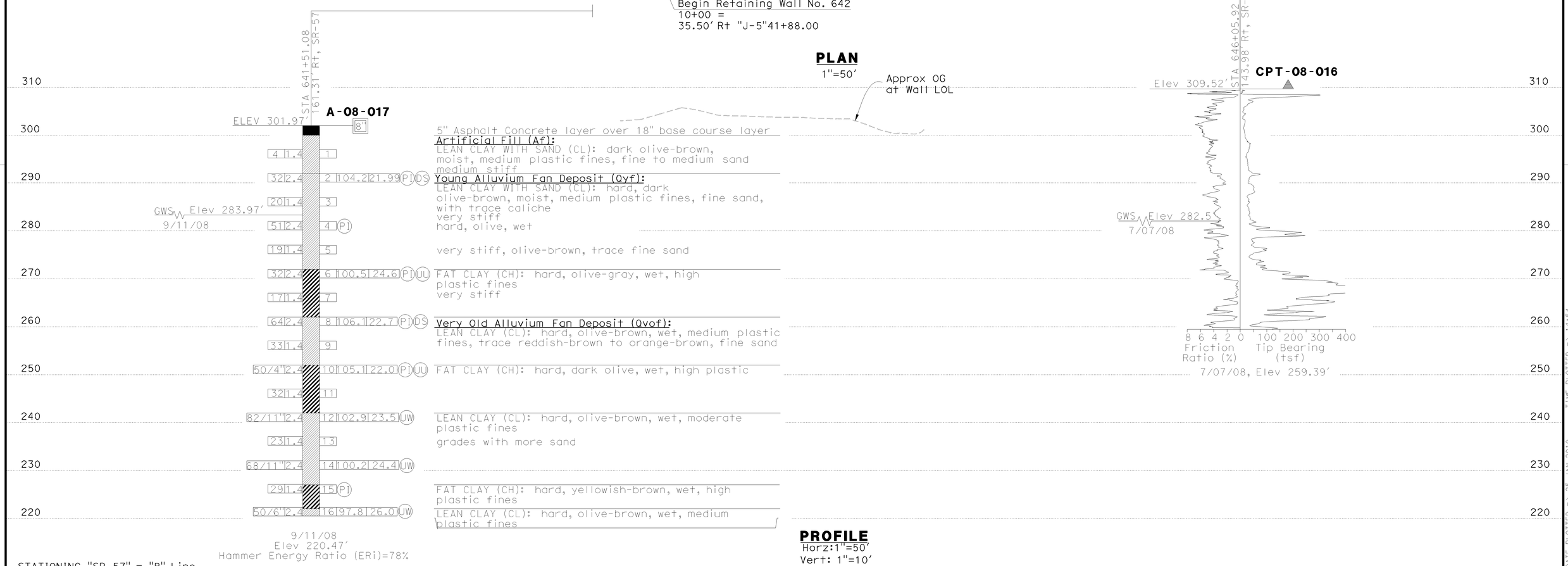

PROFILE
Horz:1"=50'
Vert: 1"=10'

STATIONING "SR-57" = "B" Line

DESIGN OVERSIGHT Jon Hamaguchi 11-24-09 SIGN OFF DATE	DRAWN BY K. Reyes	R. Bethapudi FIELD INVESTIGATION BY:	PREPARED FOR THE STATE OF CALIFORNIA DEPARTMENT OF TRANSPORTATION	Ayman Salama PROJECT ENGINEER	BRIDGE NO. 55E0093 POST MILES 19.62	RETAINING WALL NO. 642 LOG OF TEST BORINGS SHEET 1 OF 3
	CHECKED BY H. Nofal	DATE				

ORIGINAL SCALE IN INCHES FOR REDUCED PLANS 0 1 2 3

CU 12220
EA 0F0321

DISREGARD PRINTS BEARING EARLIER REVISION DATES — REVISION DATES (PRELIMINARY STAGE ONLY) 02/18/09 04/07/09 04/17/09 06/08/09 — SHEET 13 OF 15

FILE => 55e0093-z-1tb01.dgn

USERNAME => ttrright DATE PLOTTED => 25-JAN-2010 TIME PLOTTED => 14:54

REFERENCE: CALTRANS SOIL & ROCK LOGGING, CLASSIFICATION, AND PRESENTATION MANUAL (JUNE 2007)

DIST	COUNTY	ROUTE	POST MILES TOTAL PROJECT	SHEET No	TOTAL SHEETS
12	Ora	57	18.4/20.9	776	856

Hisham Nofal 06/08/09
GEOTECHNICAL PROFESSIONAL DATE

1-25-10
PLANS APPROVAL DATE

REGISTERED PROFESSIONAL ENGINEER HISHAM M. NOFAL No. 2765 Exp. 09/30/09 GEOTECHNICAL STATE OF CALIFORNIA

The State of California or its officers or agents shall not be responsible for the accuracy or completeness of electronic copies of this plan sheet.

OCTA
550 S. MAIN STREET
ORANGE, CA 92863

CH2M HILL
6 HUTTON CENTRE DRIVE, SUITE 700
SANTA ANA, CA 92707

GROUP SYMBOLS AND NAMES

Graphic/Symbol	Group Names	Graphic/Symbol	Group Names
GW	Well-graded GRAVEL Well-graded GRAVEL with SAND	CL	Lean CLAY Lean CLAY with SAND Lean CLAY with GRAVEL SANDY lean CLAY SANDY lean CLAY with GRAVEL GRAVELLY lean CLAY GRAVELLY lean CLAY with SAND
GP	Poorly graded GRAVEL Poorly graded GRAVEL with SAND		
GW-GM	Well-graded GRAVEL with SILT Well-graded GRAVEL with SILT and SAND	CL-ML	SILTY CLAY SILTY CLAY with SAND SILTY CLAY with GRAVEL SANDY SILTY CLAY SANDY SILTY CLAY with GRAVEL GRAVELLY SILTY CLAY GRAVELLY SILTY CLAY with SAND
GW-GC	Well-graded GRAVEL with CLAY (or SILTY CLAY) Well-graded GRAVEL with CLAY and SAND (or SILTY CLAY and SAND)		
GP-GM	Poorly graded GRAVEL with SILT Poorly graded GRAVEL with SILT and SAND	ML	SILT SILT with SAND SILT with GRAVEL SANDY SILT SANDY SILT with GRAVEL GRAVELLY SILT GRAVELLY SILT with SAND
GP-GC	Poorly graded GRAVEL with CLAY (or SILTY CLAY) Poorly graded GRAVEL with CLAY and SAND (or SILTY CLAY and SAND)		
GM	SILTY GRAVEL SILTY GRAVEL with SAND	OL	ORGANIC lean CLAY ORGANIC lean CLAY with SAND ORGANIC lean CLAY with GRAVEL SANDY ORGANIC lean CLAY SANDY ORGANIC lean CLAY with GRAVEL GRAVELLY ORGANIC lean CLAY GRAVELLY ORGANIC lean CLAY with SAND
GC	CLAYEY GRAVEL CLAYEY GRAVEL with SAND		
GC-GM	SILTY, CLAYEY GRAVEL SILTY, CLAYEY GRAVEL with SAND	OL	ORGANIC SILT ORGANIC SILT with SAND ORGANIC SILT with GRAVEL SANDY ORGANIC SILT SANDY ORGANIC SILT with GRAVEL GRAVELLY ORGANIC SILT GRAVELLY ORGANIC SILT with SAND
SW	Well-graded SAND Well-graded SAND with GRAVEL		
SP	Poorly graded SAND Poorly graded SAND with GRAVEL	CH	Fat CLAY Fat CLAY with SAND Fat CLAY with GRAVEL SANDY fat CLAY SANDY fat CLAY with GRAVEL GRAVELLY fat CLAY GRAVELLY fat CLAY with SAND
SW-SM	Well-graded SAND with SILT Well-graded SAND with SILT and GRAVEL		
SW-SC	Well-graded SAND with CLAY (or SILTY CLAY) Well-graded SAND with CLAY and GRAVEL (or SILTY CLAY and GRAVEL)	MH	Elastic SILT Elastic SILT with SAND Elastic SILT with GRAVEL SANDY elastic SILT SANDY elastic SILT with GRAVEL GRAVELLY elastic SILT GRAVELLY elastic SILT with SAND
SP-SM	Poorly graded SAND with SILT Poorly graded SAND with SILT and GRAVEL		
SP-SC	Poorly graded SAND with CLAY (or SILTY CLAY) Poorly graded SAND with CLAY and GRAVEL (or SILTY CLAY and GRAVEL)	OH	ORGANIC fat CLAY ORGANIC fat CLAY with SAND ORGANIC fat CLAY with GRAVEL SANDY ORGANIC fat CLAY SANDY ORGANIC fat CLAY with GRAVEL GRAVELLY ORGANIC fat CLAY GRAVELLY ORGANIC fat CLAY with SAND
SM	SILTY SAND SILTY SAND with GRAVEL		
SC	CLAYEY SAND CLAYEY SAND with GRAVEL	OH	ORGANIC elastic SILT ORGANIC elastic SILT with SAND ORGANIC elastic SILT with GRAVEL SANDY ORGANIC elastic SILT SANDY ORGANIC elastic SILT with GRAVEL GRAVELLY ORGANIC elastic SILT GRAVELLY ORGANIC elastic SILT with SAND
SC-SM	SILTY, CLAYEY SAND SILTY, CLAYEY SAND with GRAVEL		
PT	PEAT	OL/OH	ORGANIC SOIL ORGANIC SOIL with SAND ORGANIC SOIL with GRAVEL SANDY ORGANIC SOIL SANDY ORGANIC SOIL with GRAVEL GRAVELLY ORGANIC SOIL GRAVELLY ORGANIC SOIL with SAND
	COBBLES COBBLES and BOULDERS BOULDERS		

FIELD AND LABORATORY TESTING

- (C) Consolidation (ASTM D 2435)
- (CL) Collapse Potential (ASTM D 5333)
- (CP) Compaction Curve (CTM 216)
- (CR) Corrosivity Testing (CTM 643, CTM 422, CTM 417)
- (CU) Consolidated Undrained Triaxial (ASTM D 4767)
- (DS) Direct Shear (ASTM D 3080)
- (EI) Expansion Index (ASTM D 4829)
- (M) Moisture Content (ASTM D 2216)
- (OC) Organic Content-% (ASTM D 2974)
- (P) Permeability (CTM 220)
- (PA) Particle Size Analysis (ASTM D 422)
- (PI) Plasticity Index (AASHTO T 90) Liquid Limit (AASHTO T 89)
- (PL) Point Load Index (ASTM D 5731)
- (PM) Pressure Meter
- (PP) Pocket Penetrometer
- (R) R-Value (CTM 301)
- (SE) Sand Equivalent (CTM 217)
- (SG) Specific Gravity (AASHTO T 100)
- (SL) Shrinkage Limit (ASTM D 427)
- (SW) Swell Potential (ASTM D 4546)
- (TV) Pocket Torvane
- (UC) Unconfined Compression-Soil (ASTM D 2166) Unconfined Compression-Rock (ASTM D 2938)
- (UU) Unconsolidated Undrained Triaxial (ASTM D 2850)
- (UW) Unit Weight (ASTM D 4767)
- (VS) Vane Shear (AASHTO T 223)

APPARENT DENSITY OF COHESIONLESS SOILS

Description	SPT N_{60} (Blows / 12 inches)
Very loose	0 - 4
Loose	5 - 10
Medium Dense	11 - 30
Dense	31 - 50
Very Dense	> 50

MOISTURE

Description	Criteria
Dry	Absence of moisture, dusty, dry to the touch
Moist	Damp but no visible water
Wet	Visible free water, usually soil is below water table

PERCENT OR PROPORTION OF SOILS

Description	Criteria
Trace	Particles are present but estimated to be less than 5%
Few	5 to 10%
Little	15 to 25%
Some	30 to 45%
Mostly	50 to 100%

PARTICLE SIZE

Description		Size
Boulder		> 12"
Cobble		3" to 12"
Gravel	Coarse	3/4" to 3"
	Fine	No. 4 to 3/4"
Sand	Coarse	No. 10 to No. 4
	Medium	No. 40 to No. 10
	Fine	No. 200 to No. 40

CEMENTATION

Description	Criteria
Weak	Crumbles or breaks with handling or little finger pressure.
Moderate	Crumbles or breaks with considerable finger pressure.
Strong	Will not crumble or break with finger pressure.

CONSISTENCY OF COHESIVE SOILS

Description	Unconfined Compressive Strength (tsf)	Pocket Penetrometer Measurement (tsf)	Torvane Measurement (tsf)	Field Approximation
Very Soft	< 0.25	< 0.25	< 0.12	Easily penetrated several inches by fist
Soft	0.25 to 0.50	0.25 to 0.50	0.12 to 0.25	Easily penetrated several inches by thumb
Medium Stiff	0.50 to 1.0	0.50 to 1.0	0.25 to 0.50	Penetrated several inches by thumb with moderate effort
Stiff	1 to 2	1 to 2	0.50 to 1.0	Readily indented by thumb but penetrated only with great effort
Very Stiff	2 to 4	2 to 4	1.0 to 2.0	Readily indented by thumbnail
Hard	> 4.0	> 4.0	> 2.0	Indented by thumbnail with difficulty

PLASTICITY OF FINE-GRAINED SOILS

Description	Criteria
Nonplastic	A 1/8-inch thread cannot be rolled at any water content.
Low	The thread can barely be rolled and the lump cannot be formed when drier than the plastic limit.
Medium	The thread is easy to roll and not much time is required to reach the plastic limit. The thread cannot be rerolled after reaching the plastic limit. The lump crumbles when drier than the plastic limit.
High	It takes considerable time rolling and kneading to reach the plastic limit. The thread can be rerolled several times after reaching the plastic limit. The lump can be formed without crumbling when drier than the plastic limit.

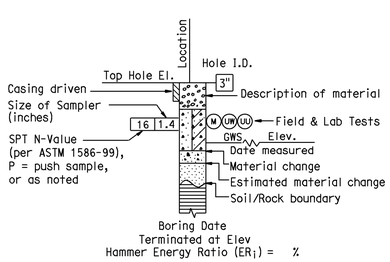

ROTARY BORING

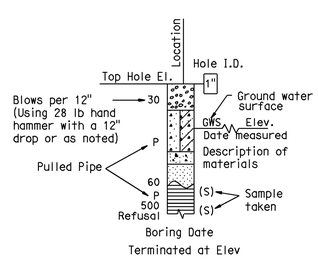

HAND BORING

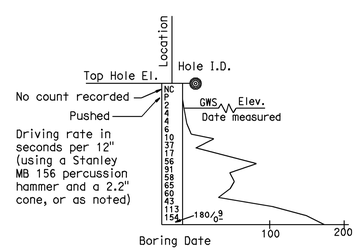

DYNAMIC CONE PENETRATION BORING

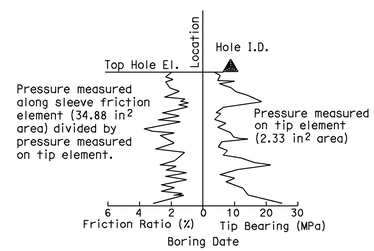

CONE PENETRATION TEST (CPT) SOUNDING

BOREHOLE IDENTIFICATION

Symbol	Hole Type	Description
Size	A	Auger Boring
Size	R P	Rotary drilled boring Rotary percussion boring (air)
Size HQ	R	Rotary drilled diamond core
Size	HD HA	Hand driven (1-inch soil tube) Hand Auger
●	D	Dynamic Cone Penetration Boring
◕	B	Hollow Stem Auger Boring (HSA)
▲	CPT	Cone Penetration Test (ASTM D 5778-95)
□	O	Other

Note: Size in inches.

RETAINING WALL NO. 642

SOIL LEGEND

LOG OF TEST BORINGS SHEET 2 OF 3

Jon Hamaguchi
DESIGN OVERSIGHT Jon Hamaguchi
11-24-09
SIGN OFF DATE

DRAWN BY K. Reyes
CHECKED BY H. Nofal

R. Bethapudi
FIELD INVESTIGATION BY:
DATE

PREPARED FOR THE STATE OF CALIFORNIA DEPARTMENT OF TRANSPORTATION

Ayman Salama
PROJECT ENGINEER

BRIDGE NO. 55E0093
POST MILES 19.62

ORIGINAL SCALE IN INCHES FOR REDUCED PLANS 0 1 2 3

CU 12220
EA 0F0321

DISREGARD PRINTS BEARING EARLIER REVISION DATES
REVISION DATES (PRELIMINARY STAGE ONLY) 02/27/09 04/27/09 04/27/09 06/08/09

SHEET 14 OF 15

FILE => 55e0093-z-1tb02.dgn

USERNAME => trrright DATE PLOTTED => 25-JAN-2010 TIME PLOTTED => 14:54

FED. ROAD DIST. NO.	STATE	F. A. PROJECT NO.	SHEET NO.	TOTAL SHEETS
7	CALIF			

DIST.	COUNTY	ROUTE	POSTMILE	SHEET NO.	TOTAL SHEETS
07	ORA	57	17.6/20.7	171	180

Date Approved September 30, 1968

BENCH MARK

BM "40-19A-5b" Elev. 292.88
Set chiz. knob on top N.E. cor. of S.E. conc. pedestal of Hathaway Co. oil well, A.V.M. "10; +8' W. of ℄ of Associated Rd., 500' N. of Sta. 391+22. "P" Line

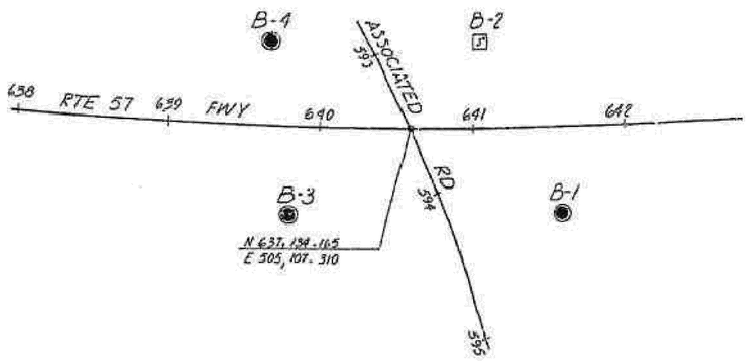

AS BUILT PLANS
Contract No. 07-032184
Date Completed
Document No. 70001578

DIVISION OF ENGINEERING SERVICES - GEOTECHNICAL SERVICES					
As-Built Log of Test Borings sheet is considered an informational document only. As such, the State of California registration seal with signature, license number and registration certificate expiration date confirm that this is a true and accurate copy of the original document. This drawing is available and presented only for the convenience of any bidder, contractor or other interested party.					
DIST.	COUNTY	ROUTE	POST MILES-TOTAL PROJECT	Sheet No.	Total Sheets
12	Ora	57	18.4/20.9	777	856
Hisham Nofal REGISTERED CIVIL ENGINEER			06/08/09 DATE		
RETAINING WALL NO. 642					
LOG OF TEST BORINGS SHEET 3 of 3					
NOTE: A COPY OF THIS LOG OF TEST BORINGS IS AVAILABLE AT OFFICE OF STRUCTURE MAINTENANCE AND INVESTIGATIONS, SACRAMENTO, CALIFORNIA		CU:12220 EA:0F0231	BRIDGE No. 55E0093		
To accompany plans dated 1-25-10			Sheet 15	of 15	

REGISTERED PROFESSIONAL ENGINEER
HISHAM M. NOFAL
No. 2765
Exp. 09/30/09
GEOTECHNICAL
STATE OF CALIFORNIA

PLAN
Scale 1" = 50'

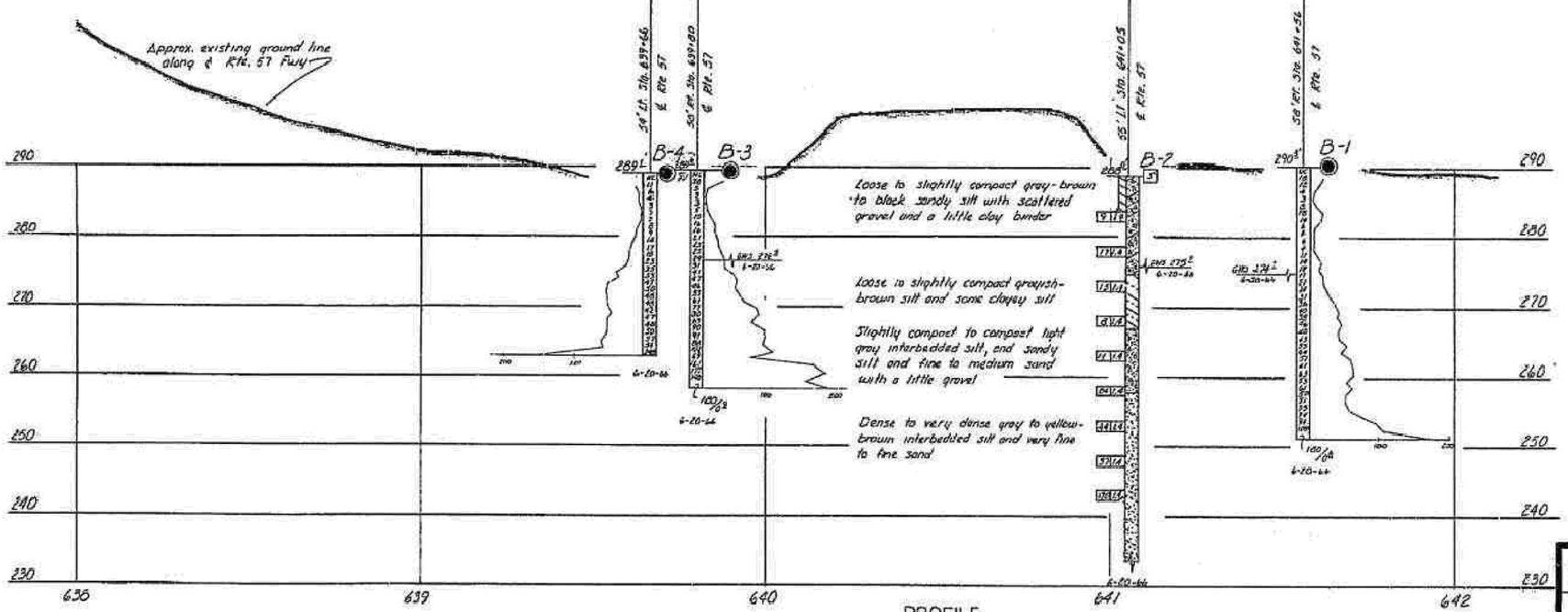

PROFILE
Scale Vert. 1" = 10'
Horiz. 1" = 20'

INFORMATION ON ACTUAL FOUNDATION CONDITIONS ENCOUNTERED IS ON FILE IN BRIDGE GEOLOGY SECTION

LEGEND OF BORING OPERATIONS

- Penetrometer
- 2¼" Core Penetrometer
- Sampler Boring (Dry)
- Rotary Boring (Wet)
- Auger Boring (Dry)
- Jet Boring
- Core Boring
- Test Pit
- Penetration Bounce
- Rotary Boring
- 1" Soil Tube

LEGEND OF EARTH MATERIALS

- Gravel
- Sand
- Silt
- Clay
- Sandy Clay or Clayey Sand
- Sandy Silt or Silty Sand
- Silty Clay or Clayey Silt
- Peat Muck Organic Matter
- Fill Material
- Igneous Rock
- Sedimentary Rock
- Metamorphic Rock

CLASSIFICATION OF MATERIAL BASED ON STANDARD GRADE SIZE LIMITS

Diagram showing the basis for estimates of soil size distribution used in determination of classification of materials. Diagram also shows approximate relationships among the terms "gravelly" and "sandy" as used to the extent known, viz. "gravelly sand." The terms "silty" and "clayey" are used to describe silt and gravel, sand, to standard grade size limits.

NOTE: Classification of earth material as shown on this sheet is based upon field inspection and is not to be construed to imply mechanical analysis.

STATE OF CALIFORNIA
DEPARTMENT OF PUBLIC WORKS
DIVISION OF HIGHWAYS

ASSOCIATED ROAD UNDERCROSSING

LOG OF TEST BORINGS

SCALE As Noted	BRIDGE 55-466	FILE	DRAWING 55466-12

PREL. DRAWING No. PR-

FILENAME => 55e0093-z-ltb03.tif

Change 07208
W.A. 032151

ENGINEERING GEOLOGY SECTION

DIST	COUNTY	ROUTE	POST MILES TOTAL PROJECT	SHEET No	TOTAL SHEETS
12	Ora	57	18.4/20.9	778	856

REGISTERED CIVIL ENGINEER 06/08/09 DATE

1-25-10
PLANS APPROVAL DATE

The State of California or its officers or agents shall not be responsible for the accuracy or completeness of electronic copies of this plan sheet.

REGISTERED PROFESSIONAL ENGINEER JENNIFER L. ELWOOD No. C64034 Exp. 9/30/10 CIVIL STATE OF CALIFORNIA

OCTA
550 S. MAIN STREET
ORANGE, CA 92863

CH2M HILL
6 HUTTON CENTRE DRIVE, SUITE 700
SANTA ANA, CA 92707

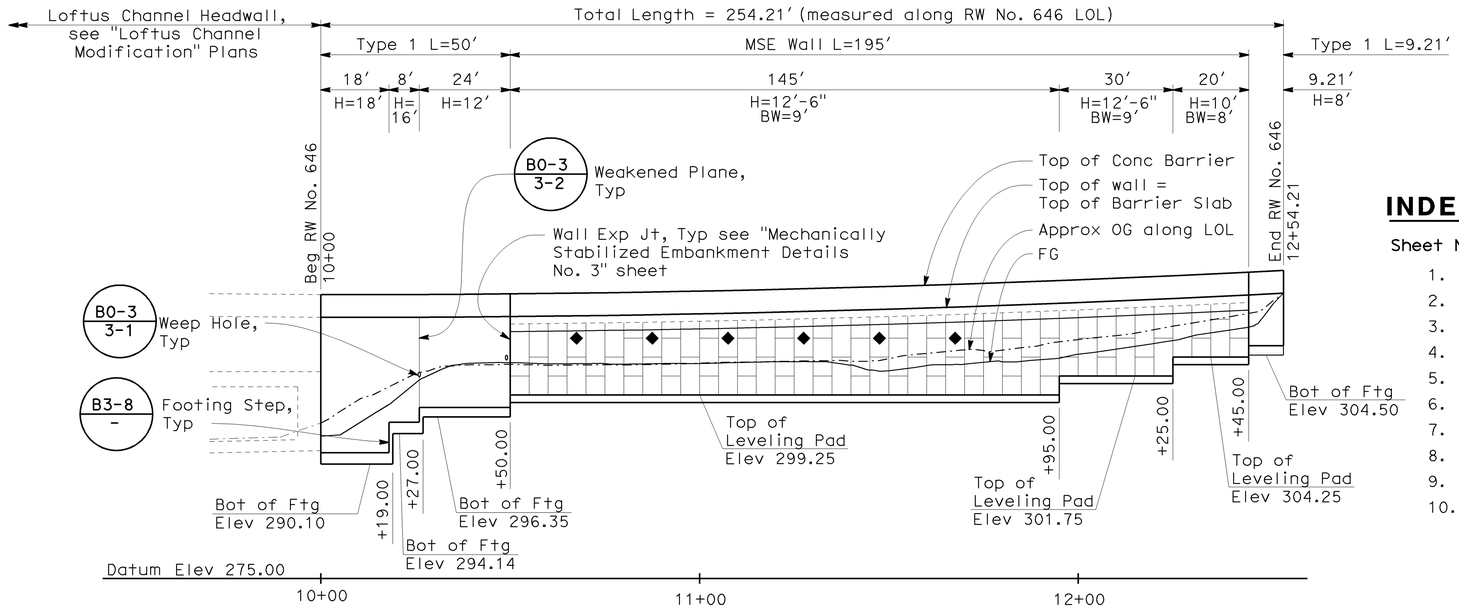

DEVELOPED MIRRORED ELEVATION

Horiz 1"=20′
Vert 1"=10′

LEGEND

◆ Indicates Inspection Wire, for details see "Mechanically Stabilized Embankment Detail No. 3" sheet

▤ Indicates Inlet, see Drainage Plans

INDEX TO PLANS

Sheet No.	Title
1.	GENERAL PLAN
2.	TYPICAL SECTIONS & RETAINING WALL DETAILS
3.	MECHANICALLY STABILIZED EMBANKMENT DETAILS NO. 1
4.	MECHANICALLY STABILIZED EMBANKMENT DETAILS NO. 2
5.	MECHANICALLY STABILIZED EMBANKMENT DETAILS NO. 3
6.	MECHANICALLY STABILIZED EMBANKMENT DETAILS NO. 4
7.	MECHANICALLY STABILIZED EMBANKMENT DETAILS NO. 6
8.	ARCHITECTURAL TREATMENT DETAILS
9.	LOG OF TEST BORINGS SHEET 1 OF 2
10.	LOG OF TEST BORINGS SHEET 2 OF 2

STANDARD PLANS DATED MAY 2006

A10A	ACRONYMS AND ABBREVIATIONS (A-L)
A10B	ACRONYMS AND ABBREVIATIONS (M-Z)
A10C	SYMBOLS (SHEET 1 OF 2)
A10D	SYMBOLS (SHEET 2 OF 2)
B0-3	BRIDGE DETAILS
B3-1	RETAINING WALL TYPE 1 H=4′ THROUGH 30′
B3-8	RETAINING WALL DETAILS NO. 1
B11-56	CONCRETE BARRIER TYPE 736
D102	UNDERDRAINS

Standard Plan Sheet No.

Detail No.

NOTES:

1. Contractor to field verify all utility locations prior to retaining wall construction.
2. For Typical Sections and Retaining Wall Elevation Table, see "Typical Sections & Retaining Wall Details" sheet.
3. For Drainage System & Details, see Drainage Plans.

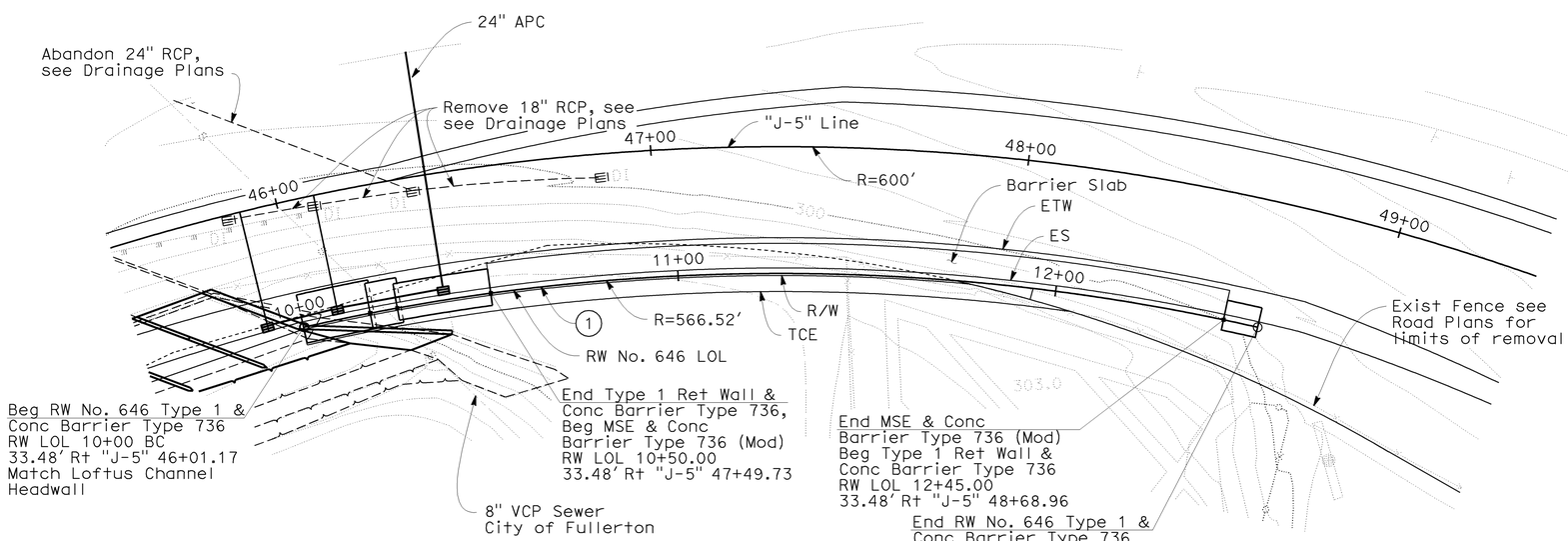

PLAN

1"=20′

CURVE DATA

NO	R	Δ	T	L
1	566.52′	25°42′35"	129.28′	254.21′

RETAINING WALL NO 646 QUANTITIES

STRUCTURE EXCAVATION (RETAINING WALL)	140	CY
STRUCTURE EXCAVATION (TYPE Y-1) (AERIALLY DEPOSITED LEAD)	17	CY
STRUCTURE BACKFILL (RETAINING WALL)	180	CY
EARTH RETAINING STRUCTURE (MECHANICALLY STABILIZED EARTH WALL)	1,710	SQFT
STRUCTURAL CONCRETE, RETAINING WALL	67	CY
STRUCTURAL CONCRETE, BARRIER SLAB	100	CY
FORMED RELIEF TEXTURE (FLOWERED PATTERN)	300	SQFT
FRACTURED RIB TEXTURE	790	SQFT
BAR REINFORCING STEEL (RETAINING WALL)	6,850	LB
CONCRETE BARRIER (TYPE 736)	59	LF
CONCRETE BARRIER (TYPE 736 MODIFIED)	195	LF

DESIGN OVERSIGHT Jon Hamaguchi
6-9-09
SIGN OFF DATE

	BY	CHECKED			
DESIGN	J. Elwood	D. Sun	LRFD	LIVE LOADING: HL-93 AND PERMIT (P-15) DESIGN LOAD	
DETAILS	J. Elwood	D. Sun	LAYOUT	P. Walker	M. Atiqullah
QUANTITIES	Y. Chiu	B.Ho	SPECIFICATIONS	M. Remolador	PLANS AND SPECS COMPARED M. Atiqullah

PREPARED FOR THE STATE OF CALIFORNIA DEPARTMENT OF TRANSPORTATION

Ayman Salama
PROJECT ENGINEER

BRIDGE NO. 55E0094
POST MILES 19.70

RETAINING WALL NO. 646
GENERAL PLAN

DESIGN GENERAL PLAN SHEET (ENGLISH) (REV. 2/25/05)

ORIGINAL SCALE IN INCHES FOR REDUCED PLANS 0 1 2 3

CU 12220
EA 0F0321

DISREGARD PRINTS BEARING EARLIER REVISION DATES

REVISION DATES (PRELIMINARY STAGE ONLY) 02/18/09 04/07/09 04/17/09 06/08/09

SHEET 1 OF 10

FILE => 55e0094-a-gp01.dgn

USERNAME => trright DATE PLOTTED => 25-JAN-2010 TIME PLOTTED => 14:54

DIST	COUNTY	ROUTE	POST MILES TOTAL PROJECT	SHEET No	TOTAL SHEETS
12	Ora	57	18.4/20.9	779	856

REGISTERED CIVIL ENGINEER 06/08/09 DATE

1-25-10
PLANS APPROVAL DATE

REGISTERED PROFESSIONAL ENGINEER JENNIFER L. ELWOOD No. C64034 Exp. 9/30/10 CIVIL STATE OF CALIFORNIA

The State of California or its officers or agents shall not be responsible for the accuracy or completeness of electronic copies of this plan sheet.

OCTA
550 S. MAIN STREET
ORANGE, CA 92863

CH2M HILL
6 HUTTON CENTRE DRIVE, SUITE 700
SANTA ANA, CA 92707

WELDED WIRE MAT SCHEDULE (LOADING CASE 1)

MAXIMUM HEIGHT	10	12.5	15	17.5	20	22.5
MINIMUM BASE WIDTH	8	9	11	12	14	16
TOP LEVELS OF MESH OVER	2 @ W11 x W11 + 6" x 9" 2 @ W11 x W11 + 6" x 12"	2 @ W11 x W11 + 6" x 9" 2 @ W11 x W11 + 6" x 12" 1 @ W11 x W11 + 6" x 18"	2 @ W11 x W11 + 6" x 9" 2 @ W11 x W11 + 6" x 12" 1 @ W11 x W11 + 6" x 18" 1 @ W11 x W11 + 6" x 24"	2 @ W11 x W11 + 6" x 9" 2 @ W11 x W11 + 6" x 12" 1 @ W11 x W11 + 6" x 18" 2 @ W11 x W11 + 6" x 24"	2 @ W11 x W11 + 6" x 9" 3 @ W11 x W11 + 6" x 18" 3 @ W11 x W11 + 6" x 24"	5 @ W11 x W11 + 6" x 18" 4 @ W11 x W11 + 6" x 24"

LEGEND

2 @ W11 x W11 + 6" x 9"

- Longitudinal wire spacing X Transverse wire spacing
- Longitudinal wire size X Transverse wire size
- Number of welded wire mats.

MSE NOTES:

1. For design height "H", base width "BW", see "General Plan" sheet. For limits of excavation & backfill, see "Mechanically Stabilized Embankment Details No. 6" sheet.
2. For Barrier slab details, see "Mechanically Stabilized Embankment Details No. 4" sheet.
3. For panel details, see "Mechanically Stabilized Embankment Details No. 1" sheet.
4. For General Notes and wire mat details, see "Mechanically Stabilized Embankment Details No. 2" sheet.
5. ◆ Indicates locations of inspection wires. For inspection wire details, see "Mechanically Stabilized Embankment Details No. 3" sheet.

RETAINING WALL ELEVATIONS

RW NO. 646 LOL STA	TOP OF WALL ELEV	FG ELEV
10+00	308.32	293.80
10+10	308.31	295.51
10+20	308.35	298.78
10+30	308.43	302.19
10+40	308.52	303.43
10+50	308.63	303.51
10+60	308.74	303.35
10+70	308.81	303.39
10+80	308.89	303.31
10+90	308.97	303.38
11+00	309.06	303.40
11+10	309.17	303.52
11+20	309.29	303.61
11+30	309.42	303.63
11+40	309.57	303.19
11+50	309.72	302.45
11+60	309.89	303.13
11+70	310.07	303.30
11+80	310.26	303.60
11+90	310.46	303.90
12+00	310.67	304.63
12+10	310.90	305.30
12+20	311.13	306.03
12+30	311.38	306.99
12+40	311.64	307.80
12+50	311.92	310.31
12+54.21	312.04	312.04

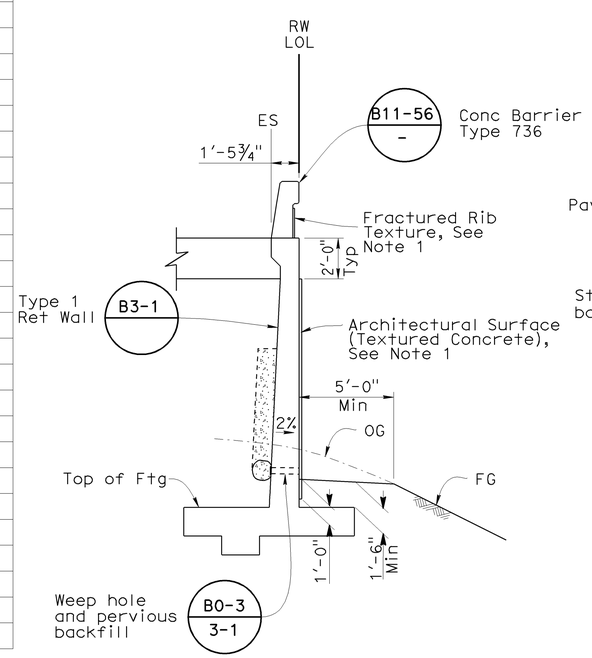

TYPICAL SECTION

¼"=1'-0"

Sta 10+00.00 to 10+50.00
and Sta 12+45.00 to 12+54.21

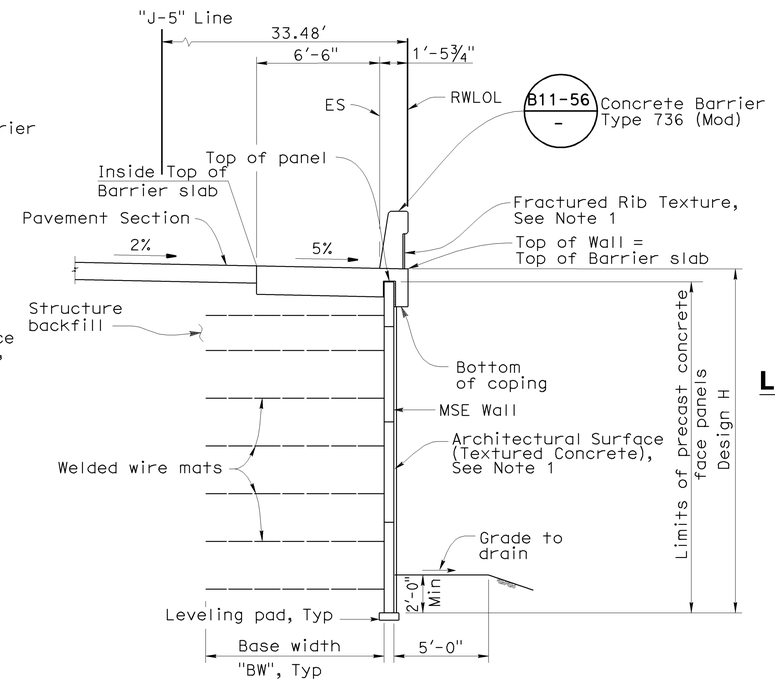

MSE WALL TYPICAL SECTION

¼"=1'-0"

Sta 10+50.00 to 12+45.00

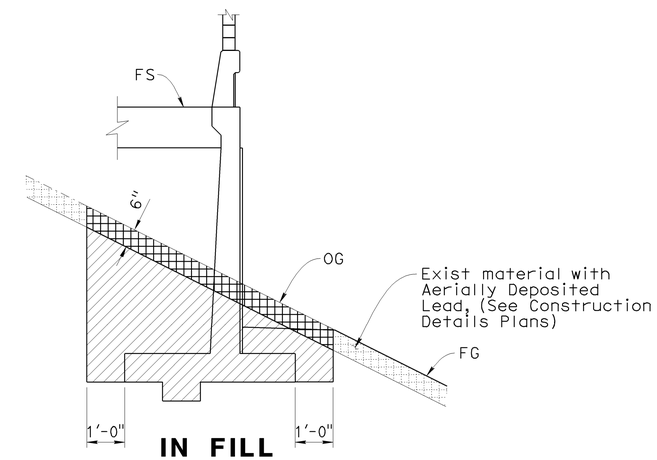

IN FILL

LIMITS OF PAYMENT OF EXCAVATION FOR RETAINING WALL

No Scale

Note:
For Backfill see Caltrans Standard Plans

LEGEND

- Indicates Structure Excavation (Type Y-1) (Aerially Deposited Lead)
- Structure Excavation (Retaining Wall)

NOTE:

1. For Fractured Rib Texture and Architectural Surface (Textured Concrete) details, See "Architectural Treatment Details" sheet.

DESIGN OVERSIGHT Jon Hamaguchi
6-9-09
SIGN OFF DATE

	BY	CHECKED
DESIGN	J. Elwood	D. Sun
DETAILS	P. Walker	D. Sun
QUANTITIES	L. Ros	Y. Chiu

PREPARED FOR THE STATE OF CALIFORNIA DEPARTMENT OF TRANSPORTATION

Ayman Salama
PROJECT ENGINEER

BRIDGE NO. 55E0094
POST MILE 19.70

RETAINING WALL NO. 646

TYPICAL SECTIONS & RETAINING WALL DETAILS

DESIGN DETAIL SHEET (ENGLISH) (REV. 2/25/05)

ORIGINAL SCALE IN INCHES FOR REDUCED PLANS 0 1 2 3

CU 12220
EA 0F0321

DISREGARD PRINTS BEARING EARLIER REVISION DATES

REVISION DATES (PRELIMINARY STAGE ONLY) 02/18/09 04/07/09 04/27/09 06/08/09

SHEET 2 OF 10

FILE => 55e0094-a-ts01.dgn

USERNAME => trrichf DATE PLOTTED => 25-JAN-2010 TIME PLOTTED => 14:54

DIST.	COUNTY	ROUTE	POST MILES TOTAL PROJECT	SHEET NO.	TOTAL SHEETS
12	Ora	57	18.4/20.9	780	856

Jennifer Elwood 06/08/09
REGISTERED ENGINEER - CIVIL DATE

1-25-10
PLANS APPROVAL DATE

REGISTERED PROFESSIONAL ENGINEER JENNIFER L. ELWOOD No. C64034 Exp. 9/30/10 CIVIL STATE OF CALIFORNIA

The State of California or its officers or agents shall not be responsible for the accuracy or completeness of electronic copies of this plan sheet.

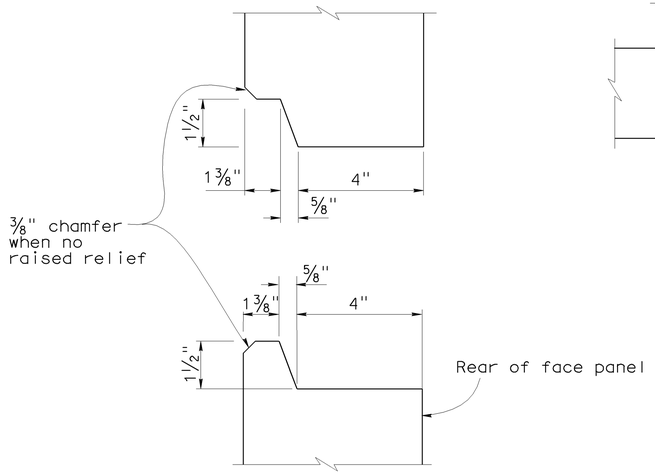

HORIZONTAL JOINT DETAIL
No Scale

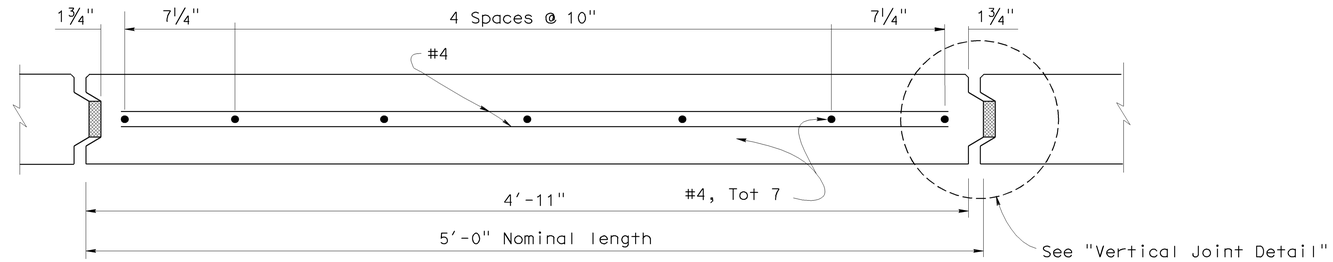

PLAN - FACE PANEL
No Scale

NOTES:

1. Architectural treatment not shown. Architectural Surface (Textured Concrete) extends beyond face of panel. See "Architectural Treatment Details" sheet.
2. Place reinforced elastomeric bearing pads in all of the panel joints between the panels. Place one in each vertical joint where the horizontal joint intersects it. Place two per panel in each horizontal joint.
   3/4" x 2 3/8" x 6" for vertical joints
   3/4" x 4" x 6" for horizontal joints.
3. Bond a strip of filter fabric, 1' - 0" wide, over the full length of all panel joints.

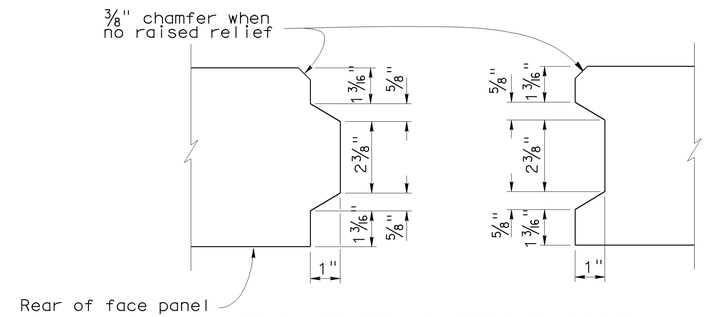

VERTICAL JOINT DETAIL
No Scale

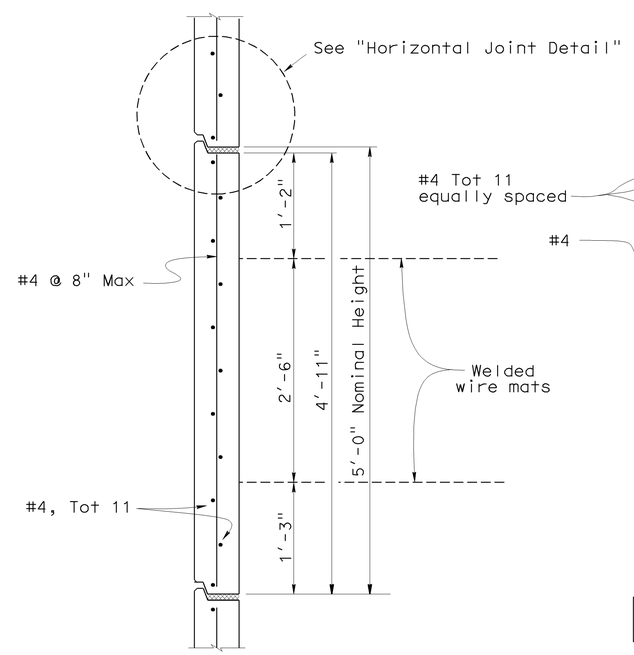

INTERMEDIATE PANEL
No Scale

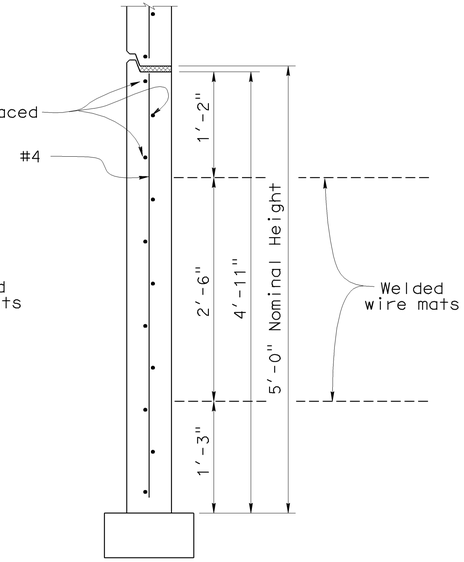

BOTTOM PANEL
No Scale

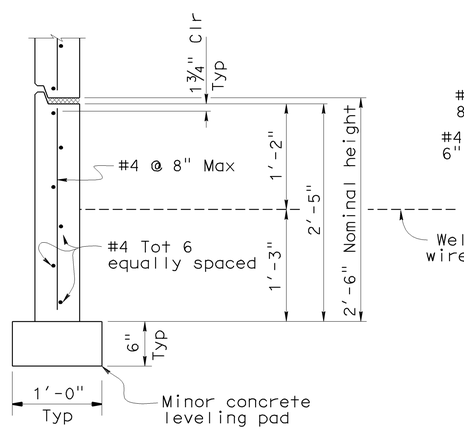

BOTTOM HALF PANEL
No Scale

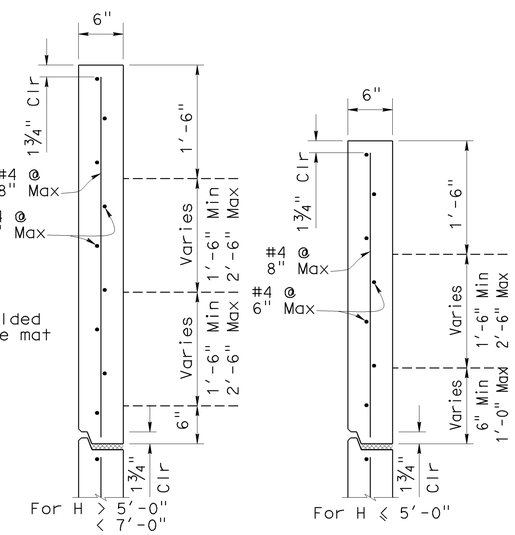

TOP PANEL
No Scale

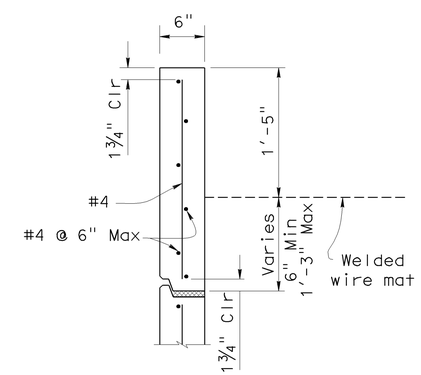

TOP HALF PANEL
No Scale

SPECIAL DETAILS

STANDARD DRAWING		
FILE NO. xs13-020-1e	APPROVED BY K. GRISWELL (RESPONSIBLE TECHNICAL SPECIALIST)	RELEASED BY ROBERTO LACALLE (RESPONSIBLE OFFICE CHIEF)
	APPROVAL DATE 5-6-08	RELEASE DATE REVISED

1 Added Top Panel Details
2 Revised Note

STATE OF CALIFORNIA DEPARTMENT OF TRANSPORTATION

DIVISION OF ENGINEERING SERVICES

BRIDGE NO. 55E0094
POST MILE 19.70

RETAINING WALL NO. 646
MECHANICALLY STABILIZED EMBANKMENT
DETAIL NO. 1

DS OSD 2147A (ENGLISH STANDARD DRAWING "XS" BORDER REV. 01/11/08)

ORIGINAL SCALE IN INCHES FOR REDUCED PLANS 0 1 2 3

CU 12220
EA 0F0321

DISREGARD PRINTS BEARING EARLIER REVISION DATES 02/18/09 04/07/09 04/17/09 06/08/09

REVISION DATES (PRELIMINARY STAGE ONLY)

SHEET 3 OF 10

USERNAME => trrichf

55e0094-g-msedt01.dgn

DATE PLOTTED => 25-JAN-2010 TIME PLOTTED => 14:54

DIST.	COUNTY	ROUTE	POST MILES TOTAL PROJECT	SHEET NO.	TOTAL SHEETS
12	Ora	57	18.4/20.9	781	856

REGISTERED ENGINEER - CIVIL DATE 06/08/09

1-25-10
PLANS APPROVAL DATE

REGISTERED PROFESSIONAL ENGINEER JENNIFER L. ELWOOD No. C64034 Exp. 9/30/10 CIVIL STATE OF CALIFORNIA

The State of California or its officers or agents shall not be responsible for the accuracy or completeness of electronic copies of this plan sheet.

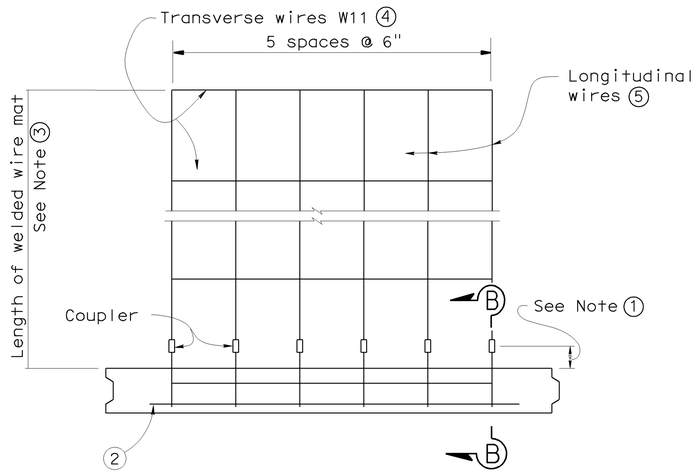

PLAN OF PANEL WITH WELDED WIRE MAT

No scale

GENERAL NOTES (MSE WALLS)

Live loading: Surcharge = 240 lb/ft^2

Soil parameters:

Internal design ϕ = 34°, γ = 120 lb/ft^3
External design ϕ(Backfill) = 34°, γ = 120 lb/ft^3
ϕ(Foundation) = 30°

Precast concrete panels:

f′c = 4,000 psi (Concrete compressive strength at 28 days)
fy = 60,000 psi (Yield strength of reinforcement)

Soil reinforcement:

Welded wire mats: fy = 65,000 psi (Yield strength)
Coupler: fy = 36,000 psi (Yield strength)
Corrosion rate = 1.1 mils/year

Reinforced concrete:

f′c = 3,600 psi, except as noted
(Concrete compressive strength at 28 days)

fy = 60,000 psi (Yield strength of reinforcement)

MSE = Mechanically stabilized embankment

NOTES:

① Distance as required to permit coupler to be swaged.

② Place #4 bar, 3′ - 2" long, centered on connector mat, but not welded to it.

③ Length equals "Base width" of wall, except it shall not be less than 16′ for the top 2 levels of mats at the top of the wall.

④ All Transverse Wires size W11 at various spacings as shown elsewhere in plans.

⑤ All Longitudinal Wires at 6" spacing, of various sizes, as shown elsewhere in plans.

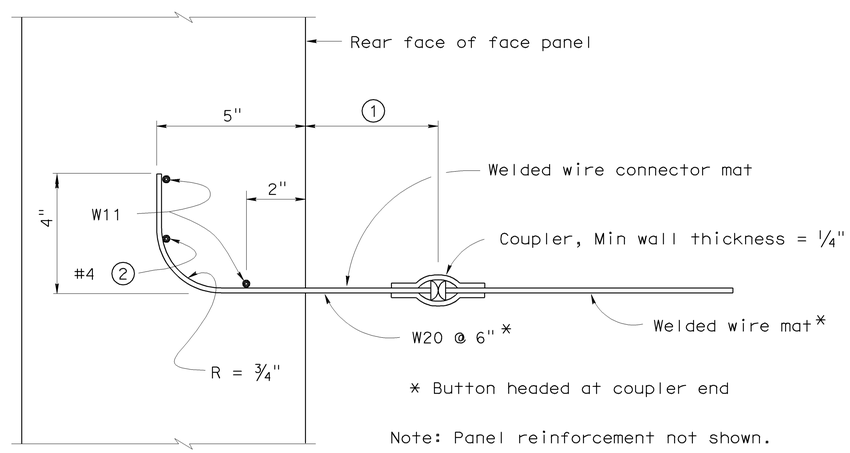

SECTION B-B

No scale

STANDARD DRAWING

FILE NO. xs13-020-2e

APPROVED BY K. GRISWELL
RESPONSIBLE TECHNICAL SPECIALIST
APPROVAL DATE 5-6-08

RELEASED BY ROBERTO LACALLE
RESPONSIBLE OFFICE CHIEF
RELEASE DATE 5-6-08

STATE OF CALIFORNIA DEPARTMENT OF TRANSPORTATION

DIVISION OF ENGINEERING SERVICES

BRIDGE NO. 55E0094
POST MILE 19.70

RETAINING WALL NO. 646
MECHANICALLY STABILIZED EMBANKMENT
DETAIL NO. 2

DS OSD 2147A (ENGLISH STANDARD DRAWING "XS" BORDER REV. 01/11/08)

ORIGINAL SCALE IN INCHES FOR REDUCED PLANS 0 1 2 3

CU 12220
EA 0F0321

DISREGARD PRINTS BEARING EARLIER REVISION DATES

REVISION DATES (PRELIMINARY STAGE ONLY) 02/18/09 04/07/09 04/17/09 06/08/09

SHEET 4 OF 10

USERNAME => trrichf

55e0094-g-msedt02.dgn

DATE PLOTTED => 25-JAN-2010 TIME PLOTTED => 14:54

DIST.	COUNTY	ROUTE	POST MILES TOTAL PROJECT	SHEET NO.	TOTAL SHEETS
12	Ora	57	18.4/20.9	782	856

Jennifer Elwood 06/08/09
REGISTERED ENGINEER - CIVIL DATE

1-25-10
PLANS APPROVAL DATE

REGISTERED PROFESSIONAL ENGINEER JENNIFER L. ELWOOD No. C64034 Exp. 9/30/10 CIVIL STATE OF CALIFORNIA

The State of California or its officers or agents shall not be responsible for the accuracy or completeness of electronic copies of this plan sheet.

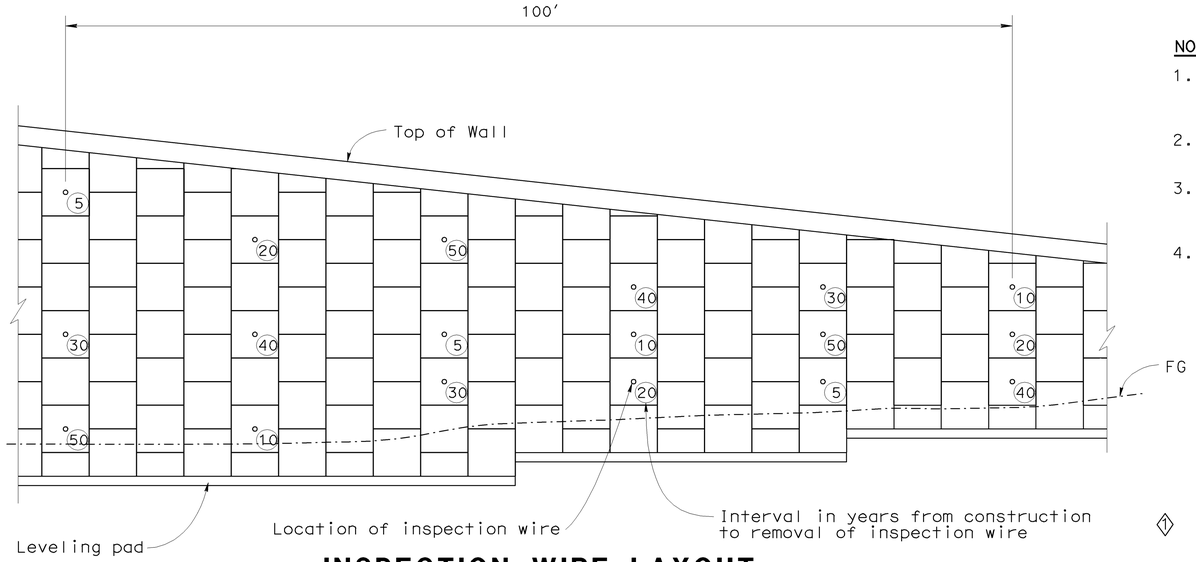

INSPECTION WIRE LAYOUT
No Scale

NOTES:

1. A set of 18 inspection wires is required for every MSE section of at least 100 feet long and a height equal to or greater than 17 feet.
2. Sets should be located approximately 500 feet apart, along the LOL.
3. Place wires in every fourth panel column along the LOL (20 feet apart) and number them according to the typical layout shown.
4. Walls which do not require a set of inspection wires based on the criteria in Note 1 shall have single level of inspection wires installed at a uniform spacing of 20 feet along this level. The location of this level shall be at the first panels above the base of the wall which will be fully exposed after completion of the wall. A minimum of 6 inspection wires shall be installed.

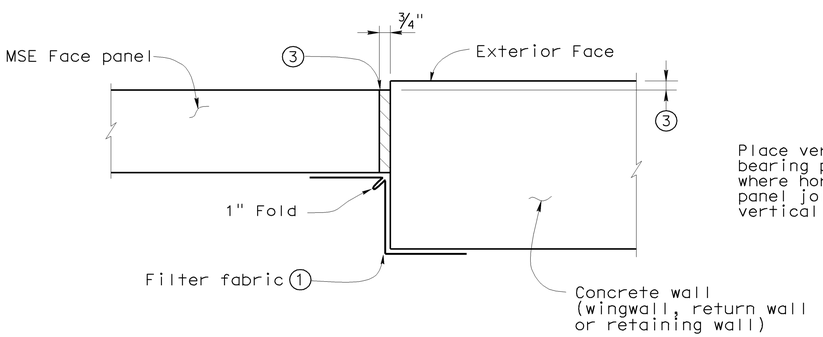

MSE FACE PANEL-TO-CONCRETE WALL JOINT DETAIL
No Scale

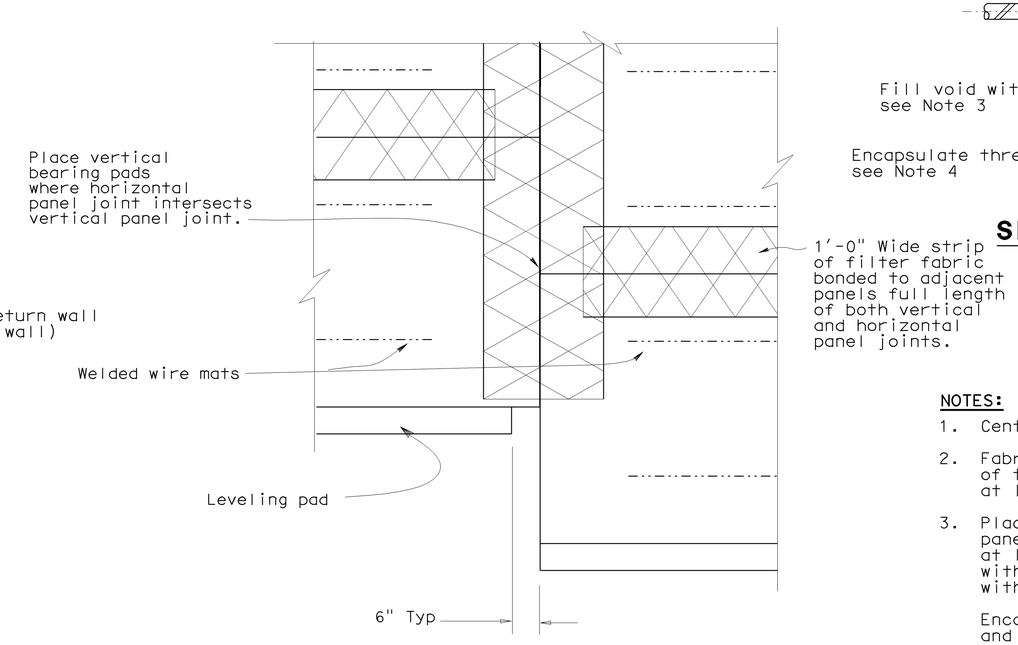

REAR ELEVATION
No Scale

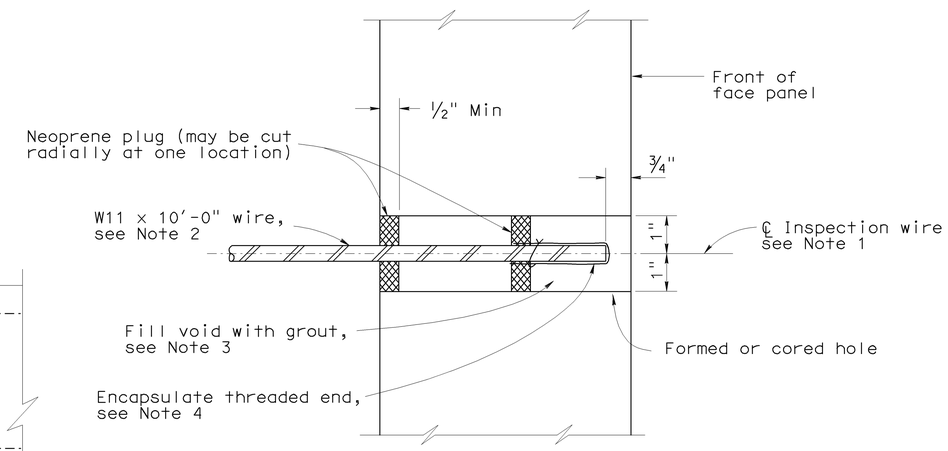

SECTION THRU INSPECTION WIRE
No Scale

LEGEND

1. Bond a strip of filter fabric, 1'-6" wide, to back of MSE panels and the adjacent concrete wall for entire length of vertical joint.
2. Bond expansion joint material to the concrete wall.
3. Offset between face of MSE face panel and face of the concrete wall as dictated by location of layout lines shown elsewhere in Project Plans.

NOTES:

1. Center inspection wire in face panel.
2. Fabricate inspection wires from W11 wire representative of the welded wire mats, with 3/8" dia - 16 UNC threads for at least 1 1/2" of one end.
3. Place inspection wire horizontal and perpendicular to the wall panel prior to backfilling. After backfill placement to a level at least 2'-0" above the inspection wire, dry pack opening with 1000 to 1500 psi mortar. Trowel mortar smooth and flush with face of panel.

   Encapsulate threaded end with corrosion inhibiting mastic, and secure round vinyl cover with nylon tie.
4. UNC = Unified coarse threads

SPECIAL DETAILS

RETAINING WALL NO. 646
MECHANICALLY STABILIZED EMBANKMENT
DETAIL NO. 3

STANDARD DRAWING

FILE NO. xs13-020-3e

APPROVED BY K. GRISWELL, RESPONSIBLE TECHNICAL SPECIALIST
APPROVAL DATE 5-6-08

RELEASED BY ROBERTO LACALLE, RESPONSIBLE OFFICE CHIEF
RELEASE DATE REVISED

1 Added Inspection Wire Layout & Notes from Bridge Design Aids 3-8

STATE OF CALIFORNIA DEPARTMENT OF TRANSPORTATION

DIVISION OF ENGINEERING SERVICES

BRIDGE NO. 55E0094
POST MILE 19.70

CU 12220
EA 0F0321

DISREGARD PRINTS BEARING EARLIER REVISION DATES 02/18/09 04/07/09 04/17/09 06/08/09

SHEET 5 OF 10

DS OSD 2147A (ENGLISH STANDARD DRAWING "XS" BORDER REV. 01/11/08)

ORIGINAL SCALE IN INCHES FOR REDUCED PLANS 0 1 2 3

USERNAME => trrichf

55e0094-g-msedt03.dgn

DATE PLOTTED => 25-JAN-2010 TIME PLOTTED => 14:54

DIST.	COUNTY	ROUTE	POST MILES TOTAL PROJECT	SHEET NO.	TOTAL SHEETS
12	Ora	57	18.4/20.9	783	856

REGISTERED ENGINEER - CIVIL DATE 06/08/09

1-25-10
PLANS APPROVAL DATE

REGISTERED PROFESSIONAL ENGINEER JENNIFER L. ELWOOD No. C64034 Exp. 9/30/10 CIVIL STATE OF CALIFORNIA

The State of California or its officers or agents shall not be responsible for the accuracy or completeness of electronic copies of this plan sheet.

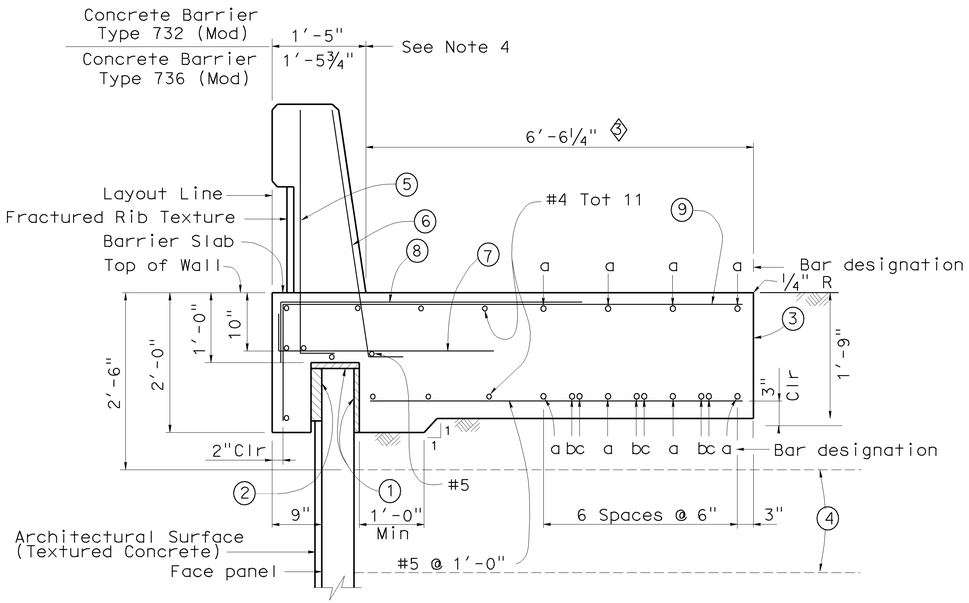

SECTION AT TOP OF WALL WITH BARRIER SLAB AND CONCRETE BARRIER

No Scale

NOTES:

1. Clearance to reinforcing steel in concrete barrier to be 1".
2. Not all barrier reinforcement shown.
3. No expansion joints in concrete barrier or barrier slab within MSE wall limits.
4. Specific concrete barrier to be utilized as shown on typical section elsewhere in Project Plans.
5. Install cable railing or chain link fence when indicated in Project Plans.

LEGEND

(1) 1" Expanded polystyrene.

(2) 2" Expanded polystyrene. Recess expanded polystyrene 2" into barrier slab.

(3) Contact joint.

(4) Welded Wire Mat Soil reinforcement.

(5) #5 6¼" @ 1'-4" (To be in place prior to barrier slab concrete).

(6) #5 6¼" @ 8" (To be in place prior to barrier slab concrete).

(7) #5 6¼" 3'-4" @ 1'-0"

(8) #5 4'-7" @ 1'-0" bundled with (9) bars.

(9) #5 5'-0" 1 1 7-3¾" @ 1'-0"

SPECIAL DETAILS

RETAINING WALL NO. 646

MECHANICALLY STABILIZED EMBANKMENT

DETAIL NO. 4

STANDARD DRAWING

FILE NO. xs13-020-4e

APPROVED BY K. GRISWELL RESPONSIBLE TECHNICAL SPECIALIST

APPROVAL DATE 5-6-08

RELEASED BY ROBERTO LACALLE RESPONSIBLE OFFICE CHIEF

RELEASE DATE REVISED

1 Removed Detail
2 Removed Notes (10) thru (15)
3 Revised dimension & detail

STATE OF CALIFORNIA DEPARTMENT OF TRANSPORTATION

DIVISION OF ENGINEERING SERVICES

BRIDGE NO. 55E0094

POST MILE 19.70

CU 12220
EA 0F0321

DISREGARD PRINTS BEARING EARLIER REVISION DATES 02/18/09 04/07/09 04/17/09 06/08/09

SHEET 6 OF 10

DS OSD 2147A (ENGLISH STANDARD DRAWING "XS" BORDER REV. 01/11/08)

ORIGINAL SCALE IN INCHES FOR REDUCED PLANS 0 1 2 3

USERNAME => trrichf

55e0094-g-msedt04.dgn

DATE PLOTTED => 25-JAN-2010 TIME PLOTTED => 14:54

DIST.	COUNTY	ROUTE	POST MILES TOTAL PROJECT	SHEET NO.	TOTAL SHEETS
12	Ora	57	18.4/20.9	784	856

REGISTERED ENGINEER - CIVIL DATE 06/08/09

1-25-10
PLANS APPROVAL DATE

REGISTERED PROFESSIONAL ENGINEER JENNIFER L. ELWOOD No. C64034 Exp. 9/30/10 CIVIL STATE OF CALIFORNIA

The State of California or its officers or agents shall not be responsible for the accuracy or completeness of electronic copies of this plan sheet.

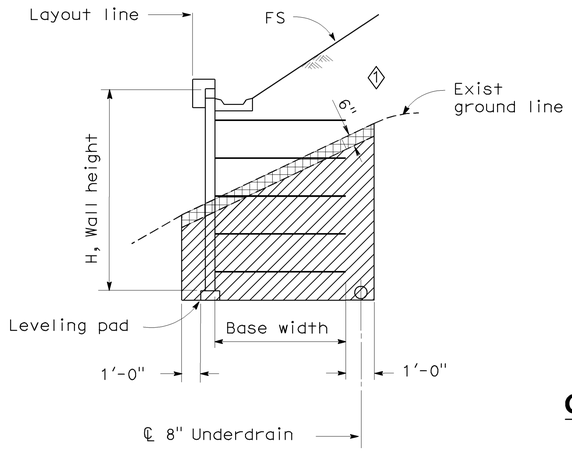

LIMITS OF EXCAVATION

No Scale

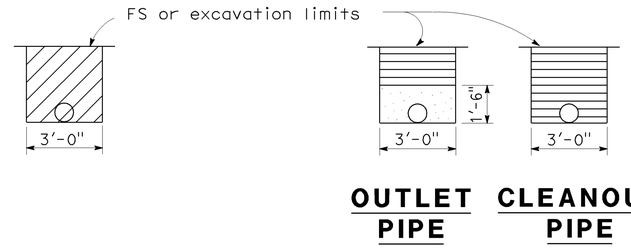

OUTLET OR CLEANOUT PIPE FOR UNDERDRAIN

No Scale

ABBREVIATIONS

OG	Original ground
FS	Planned finished surface
GP	Planned grading plane

LEGEND

- Limits of structure excavation
- Limits of structure backfill
- Limits of permeable material
- Indicates Structure Excavation (Type Y-1) (Aerially Deposited Lead)

NOTES:

1. Limits to FS except to GP when in roadway section.
2. Locate 8" perforated underdrain below bottom level of welded wire mats.
3. Maximum spacing of outlet pipes is 200 ft.
4. At sags in profile of underdrain, install outlet pipe for each direction of flow.

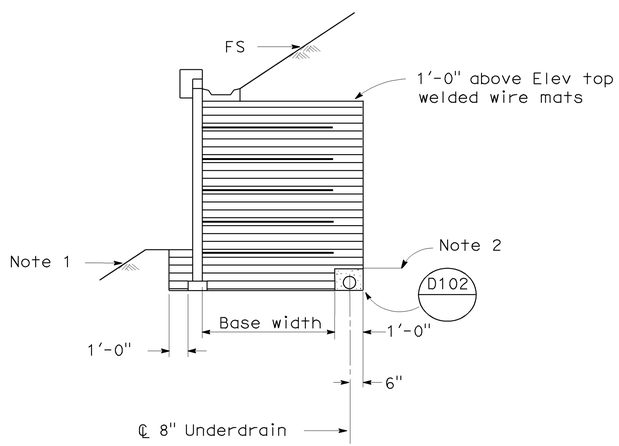

SLOPING FINISHED SURFACE

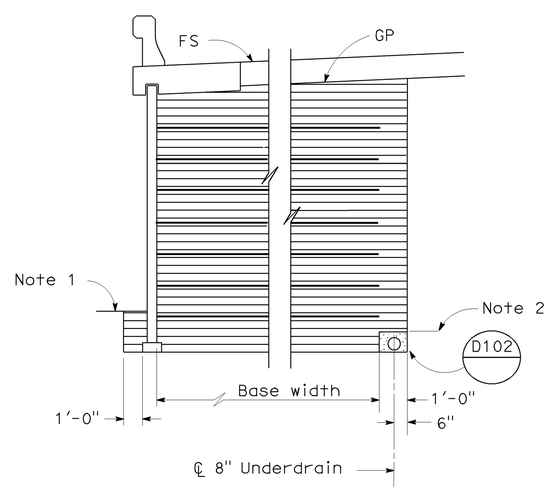

ROADWAY SECTION WITH BASE WIDTH 16' OR GREATER

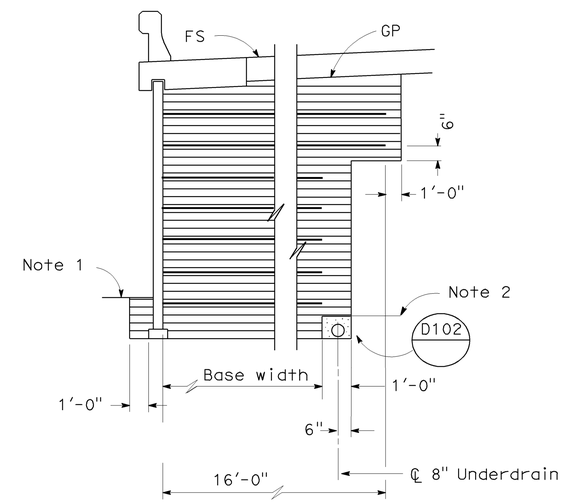

ROADWAY SECTION WITH BASE WIDTH LESS THAN 16'

LIMITS OF BACKFILL

No Scale

SPECIAL DETAILS

RETAINING WALL NO. 646

MECHANICALLY STABILIZED EMBANKMENT

DETAIL NO. 6

STANDARD DRAWING

FILE NO. xs13-020-6e

APPROVED BY K. GRISWELL — RESPONSIBLE TECHNICAL SPECIALIST
APPROVAL DATE 5-6-08

RELEASED BY ROBERTO LACALLE — RESPONSIBLE OFFICE CHIEF
RELEASE DATE REVISED

1 Added Limits of ADL Excavation
2 Added ADL Excavation Legend

STATE OF CALIFORNIA DEPARTMENT OF TRANSPORTATION

DIVISION OF ENGINEERING SERVICES

BRIDGE NO. 55E0094
POST MILE 19.70

DS OSD 2147A (ENGLISH STANDARD DRAWING "XS" BORDER REV. 01/11/08)

ORIGINAL SCALE IN INCHES FOR REDUCED PLANS 0 1 2 3

CU 12220
EA 0F0321

DISREGARD PRINTS BEARING EARLIER REVISION DATES

REVISION DATES (PRELIMINARY STAGE ONLY) 02/18/09 04/07/09 04/17/09 06/08/09

SHEET 7 OF 10

USERNAME => trrichf

55e0094-g-msedt06.dgn

DATE PLOTTED => 25-JAN-2010 TIME PLOTTED => 14:55

DIST	COUNTY	ROUTE	POST MILES TOTAL PROJECT	SHEET No	TOTAL SHEETS
12	Ora	57	18.4/20.9	785	856

REGISTERED CIVIL ENGINEER — DATE 06/08/09

1-25-10
PLANS APPROVAL DATE

REGISTERED PROFESSIONAL ENGINEER — MOHAMMED ATIQULLAH — No. C47027 — Exp. 12/31/09 — CIVIL — STATE OF CALIFORNIA

The State of California or its officers or agents shall not be responsible for the accuracy or completeness of electronic copies of this plan sheet.

OCTA
550 S. MAIN STREET
ORANGE, CA 92863

CH2M HILL
6 HUTTON CENTRE DRIVE, SUITE 700
SANTA ANA, CA 92707

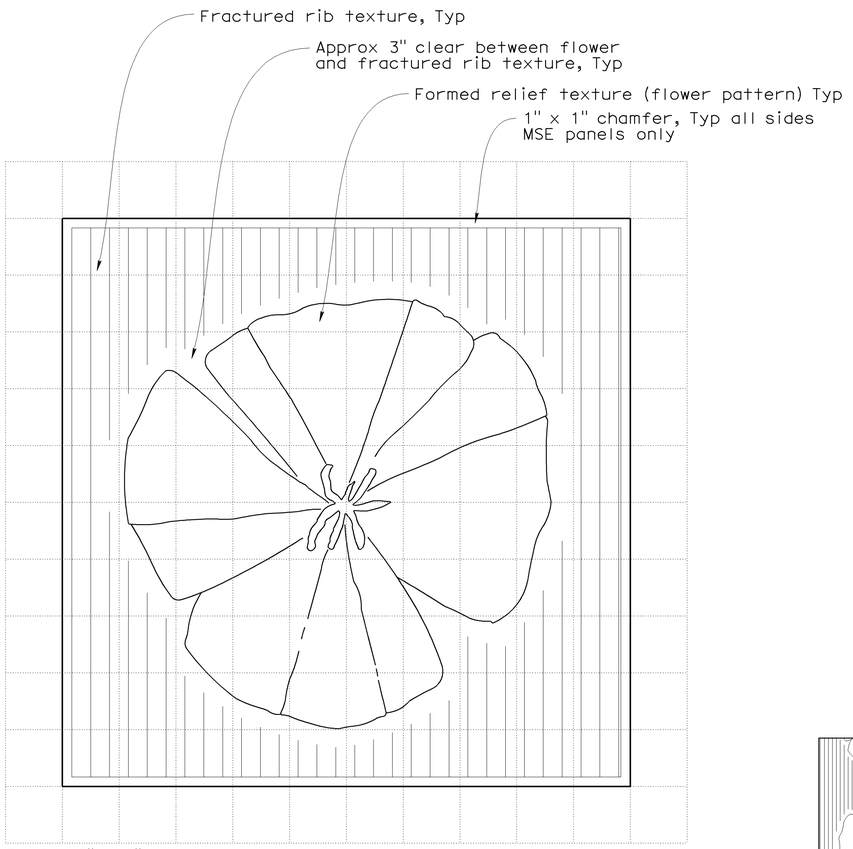

ARCHITECTURAL SURFACE (TEXTURED CONCRETE) FOR MSE PANEL

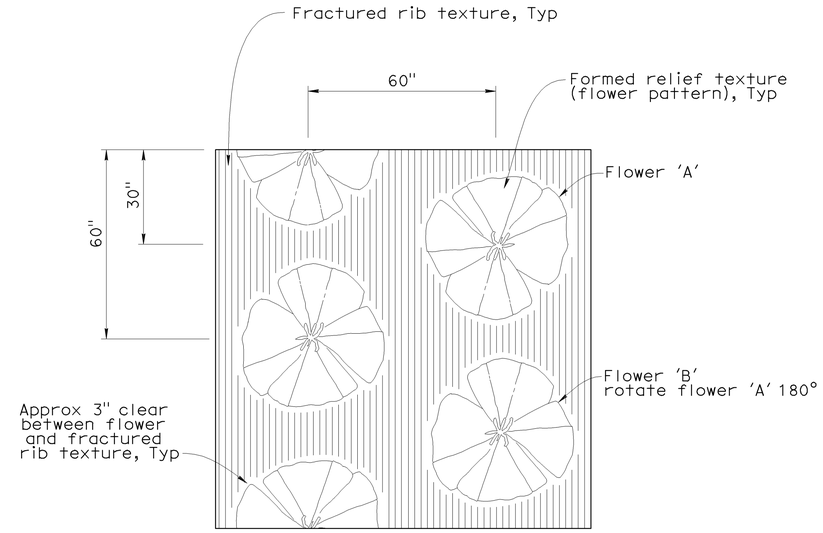

ARCHITECTURAL SURFACE (TEXTURED CONCRETE) PATTERN

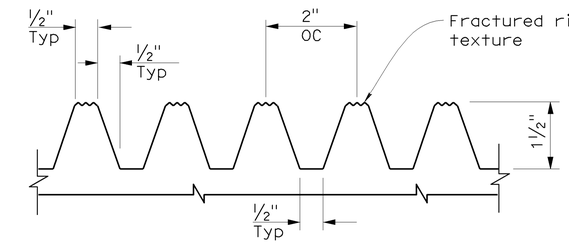

FRACTURED RIB TEXTURE DETAIL

(Elastomer Formliner)

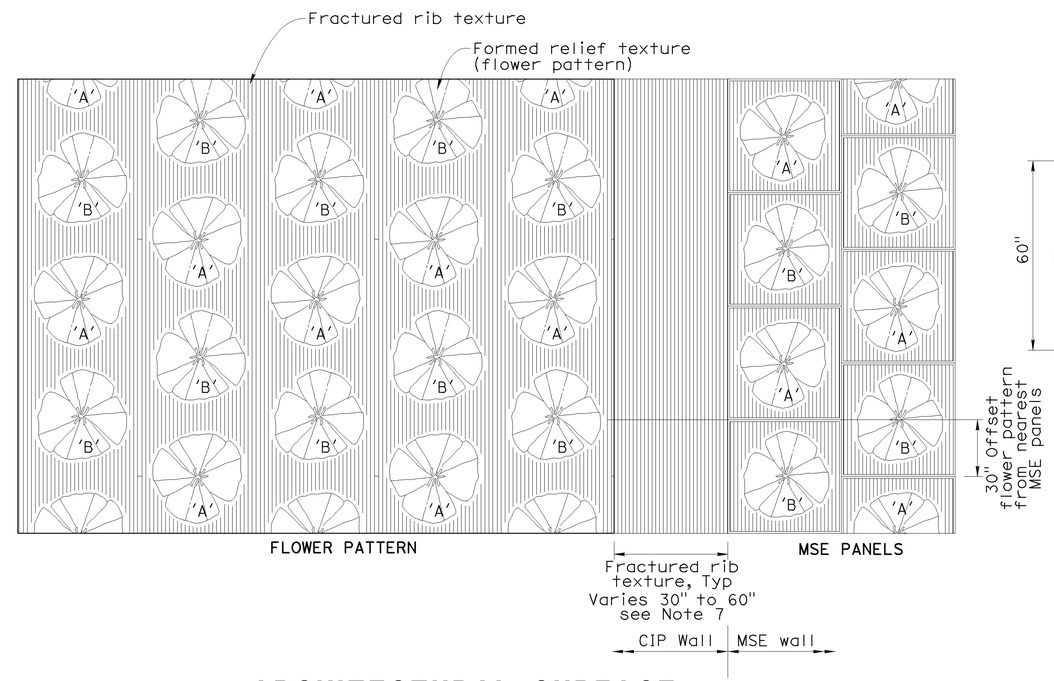

ARCHITECTURAL SURFACE (TEXTURED CONCRETE) ELEVATION

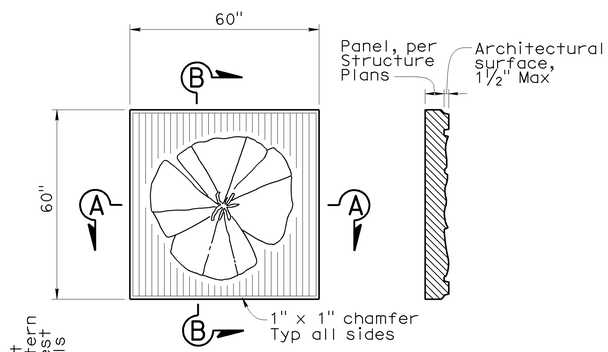

VIEW

SECTION B-B

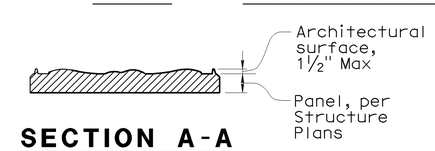

SECTION A-A

MSE PANEL

No scale

NOTES:

1. Identical flower images, scale and spacing shall be used for flower pattern and MSE wall panels.
2. Within a vertical column, flower images shall alternate between flowers 'A' and 'B'. Vertical columns shall be offset 30" from adjacent columns.
3. Where placed on walls bounded by concrete barriers, finished grade or top of wall, flower pattern shall be continued without concern for partial flower images, except as noted.
4. Refer to structural details for width of smooth band to be applied at edges of structures.
5. Where the flower pattern will be used adjacent to a horizontal limit such as a bridge abutment, adjoining MSE wall or overhead sign structure support, flower pattern shall be discontinued from a section not less than 30" and not greater than 60" wide from the horizontal limit to avoid truncation of flower images. Fractured rib texture shall be inserted in the resulting gap to create a continuous buffer between pattern areas.
6. The nearest column of flower images (flower pattern) shall be offset vertically 30" from the panels.
7. Vary fractured rib texture width (30" to 60") to provide complete flower pattern on cip wall side.

DESIGN OVERSIGHT — Jon Hamaguchi
6-9-09
SIGN OFF DATE

	BY	CHECKED
DESIGN	M. Atiqullah	E. Cutler
DETAILS	M. Atiqullah	E. Cutler
QUANTITIES	Y. Chiu	B. Ho

PREPARED FOR THE STATE OF CALIFORNIA DEPARTMENT OF TRANSPORTATION

Ayman Salama
PROJECT ENGINEER

BRIDGE NO. 55E0094
POST MILE 19.70

RETAINING WALL NO. 646

ARCHITECTURAL TREATMENT DETAILS

DESIGN DETAIL SHEET (ENGLISH) (REV. 2/25/05)

ORIGINAL SCALE IN INCHES FOR REDUCED PLANS 0 1 2 3

CU 12220
EA 0F0321

DISREGARD PRINTS BEARING EARLIER REVISION DATES

REVISION DATES (PRELIMINARY STAGE ONLY) 06/08/09

SHEET 8 OF 10

FILE => 55e0094-t-arcdt01.dgn

USERNAME => trrichf DATE PLOTTED => 25-JAN-2010 TIME PLOTTED => 14:55

DIST	COUNTY	ROUTE	POST MILES TOTAL PROJECT	SHEET No	TOTAL SHEETS
12	Ora	57	18.4/20.9	786	856

Hisham Nofal 06/08/09
GEOTECHNICAL PROFESSIONAL DATE

1-25-10
PLANS APPROVAL DATE

REGISTERED PROFESSIONAL ENGINEER HISHAM M. NOFAL No. 2765 Exp. 09/30/09 GEOTECHNICAL STATE OF CALIFORNIA

The State of California or its officers or agents shall not be responsible for the accuracy or completeness of electronic copies of this plan sheet.

OCTA
550 S. MAIN STREET
ORANGE, CA 92863

CH2M HILL
6 HUTTON CENTRE DRIVE, SUITE 700
SANTA ANA, CA 92707

BENCHMARK:

Horizontal coordinates are CCS NAD-83, Zone 6.
Vertical control based on North American Vertical Datum 1988.
Pt 1068: N2277999.248, E6066394.642, Elev 310.252
Pt 1069: N2278210.836, E6066285.157, Elev 305.442

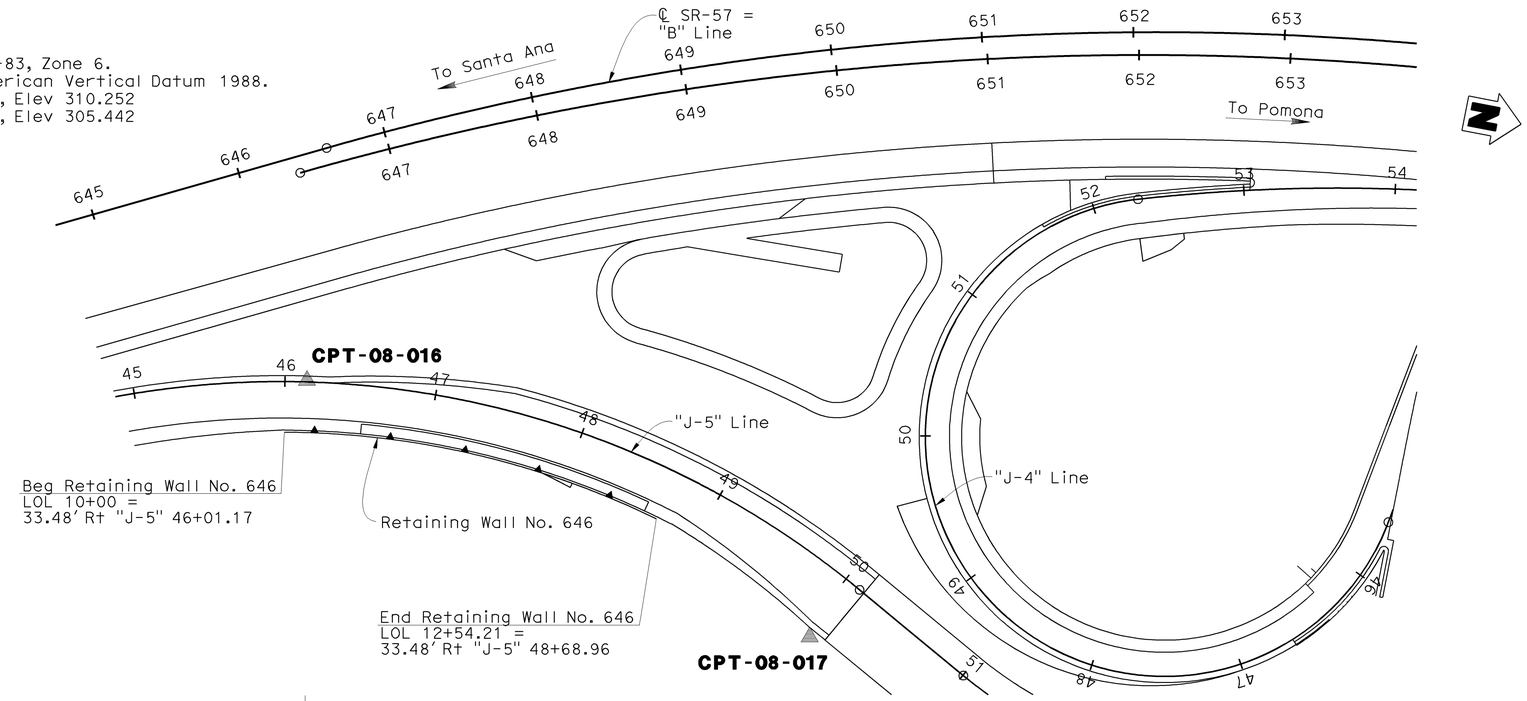

PLAN
1"=50′

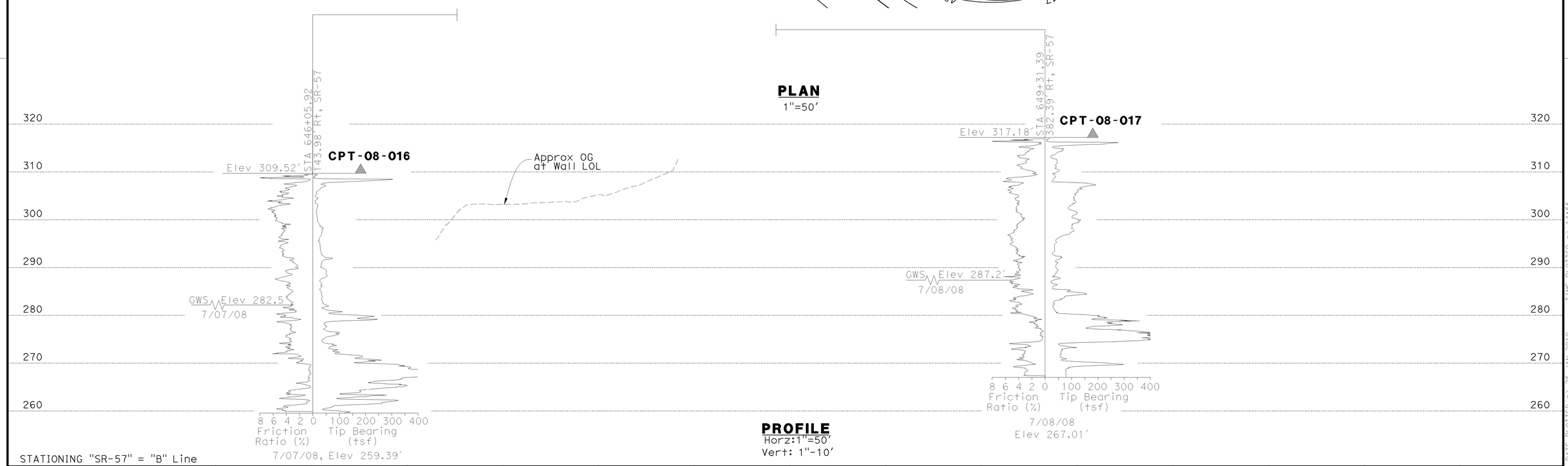

PROFILE
Horz:1"=50′
Vert: 1"-10′

STATIONING "SR-57" = "B" Line

642 643 644 645 646 647 648 649 650 651 652 653 654 655 656 657

Jon Hanaguchi DESIGN OVERSIGHT 6-9-09 SIGN OFF DATE	DRAWN BY K. Reyes	R. Bethapudi FIELD INVESTIGATION BY:	PREPARED FOR THE STATE OF CALIFORNIA DEPARTMENT OF TRANSPORTATION	Ayman Salama PROJECT ENGINEER	BRIDGE NO. 55E0094 POST MILES 19.70	RETAINING WALL No. 646	
	CHECKED BY H. Nofal	DATE				LOG OF TEST BORINGS SHEET 1 OF 2	

ORIGINAL SCALE IN INCHES FOR REDUCED PLANS 0 1 2 3

CU 12220
EA 0F0321

DISREGARD PRINTS BEARING EARLIER REVISION DATES

REVISION DATES (PRELIMINARY STAGE ONLY) 02/18/09 04/07/09 04/17/09 06/08/09

SHEET 9 OF 10

FILE => 55e0094-z-1tb01.dgn

USERNAME => trright DATE PLOTTED => 25-JAN-2010 TIME PLOTTED => 14:55

DIST	COUNTY	ROUTE	POST MILES TOTAL PROJECT	SHEET No	TOTAL SHEETS
12	Ora	57	18.4/20.9	787	856

Hisham Nofal 06/08/09
GEOTECHNICAL PROFESSIONAL DATE

1-25-10
PLANS APPROVAL DATE

REGISTERED PROFESSIONAL ENGINEER HISHAM M. NOFAL No. 2765 Exp. 09/30/09 GEOTECHNICAL STATE OF CALIFORNIA

The State of California or its officers or agents shall not be responsible for the accuracy or completeness of electronic copies of this plan sheet.

OCTA
550 S. MAIN STREET
ORANGE, CA 92863

CH2M HILL
6 HUTTON CENTRE DRIVE, SUITE 700
SANTA ANA, CA 92707

REFERENCE: CALTRANS SOIL & ROCK LOGGING, CLASSIFICATION, AND PRESENTATION MANUAL (JUNE 2007)

GROUP SYMBOLS AND NAMES

Graphic/Symbol	Group Names	Graphic/Symbol	Group Names
GW	Well-graded GRAVEL Well-graded GRAVEL with SAND	CL	Lean CLAY Lean CLAY with SAND Lean CLAY with GRAVEL SANDY lean CLAY SANDY lean CLAY with GRAVEL GRAVELLY lean CLAY GRAVELLY lean CLAY with SAND
GP	Poorly graded GRAVEL Poorly graded GRAVEL with SAND		
GW-GM	Well-graded GRAVEL with SILT Well-graded GRAVEL with SILT and SAND	CL-ML	SILTY CLAY SILTY CLAY with SAND SILTY CLAY with GRAVEL SANDY SILTY CLAY SANDY SILTY CLAY with GRAVEL GRAVELLY SILTY CLAY GRAVELLY SILTY CLAY with SAND
GW-GC	Well-graded GRAVEL with CLAY (or SILTY CLAY) Well-graded GRAVEL with CLAY and SAND (or SILTY CLAY and SAND)		
GP-GM	Poorly graded GRAVEL with SILT Poorly graded GRAVEL with SILT and SAND	ML	SILT SILT with SAND SILT with GRAVEL SANDY SILT SANDY SILT with GRAVEL GRAVELLY SILT GRAVELLY SILT with SAND
GP-GC	Poorly graded GRAVEL with CLAY (or SILTY CLAY) Poorly graded GRAVEL with CLAY and SAND (or SILTY CLAY and SAND)		
GM	SILTY GRAVEL SILTY GRAVEL with SAND	OL	ORGANIC lean CLAY ORGANIC lean CLAY with SAND ORGANIC lean CLAY with GRAVEL SANDY ORGANIC lean CLAY SANDY ORGANIC lean CLAY with GRAVEL GRAVELLY ORGANIC lean CLAY GRAVELLY ORGANIC lean CLAY with SAND
GC	CLAYEY GRAVEL CLAYEY GRAVEL with SAND		
GC-GM	SILTY, CLAYEY GRAVEL SILTY, CLAYEY GRAVEL with SAND	OL	ORGANIC SILT ORGANIC SILT with SAND ORGANIC SILT with GRAVEL SANDY ORGANIC SILT SANDY ORGANIC SILT with GRAVEL GRAVELLY ORGANIC SILT GRAVELLY ORGANIC SILT with SAND
SW	Well-graded SAND Well-graded SAND with GRAVEL		
SP	Poorly graded SAND Poorly graded SAND with GRAVEL	CH	Fat CLAY Fat CLAY with SAND Fat CLAY with GRAVEL SANDY fat CLAY SANDY fat CLAY with GRAVEL GRAVELLY fat CLAY GRAVELLY fat CLAY with SAND
SW-SM	Well-graded SAND with SILT Well-graded SAND with SILT and GRAVEL		
SW-SC	Well-graded SAND with CLAY (or SILTY CLAY) Well-graded SAND with CLAY and GRAVEL (or SILTY CLAY and GRAVEL)	MH	Elastic SILT Elastic SILT with SAND Elastic SILT with GRAVEL SANDY elastic SILT SANDY elastic SILT with GRAVEL GRAVELLY elastic SILT GRAVELLY elastic SILT with SAND
SP-SM	Poorly graded SAND with SILT Poorly graded SAND with SILT and GRAVEL		
SP-SC	Poorly graded SAND with CLAY (or SILTY CLAY) Poorly graded SAND with CLAY and GRAVEL (or SILTY CLAY and GRAVEL)	OH	ORGANIC fat CLAY ORGANIC fat CLAY with SAND ORGANIC fat CLAY with GRAVEL SANDY ORGANIC fat CLAY SANDY ORGANIC fat CLAY with GRAVEL GRAVELLY ORGANIC fat CLAY GRAVELLY ORGANIC fat CLAY with SAND
SM	SILTY SAND SILTY SAND with GRAVEL		
SC	CLAYEY SAND CLAYEY SAND with GRAVEL	OH	ORGANIC elastic SILT ORGANIC elastic SILT with SAND ORGANIC elastic SILT with GRAVEL SANDY ORGANIC elastic SILT SANDY ORGANIC elastic SILT with GRAVEL GRAVELLY ORGANIC elastic SILT GRAVELLY ORGANIC elastic SILT with SAND
SC-SM	SILTY, CLAYEY SAND SILTY, CLAYEY SAND with GRAVEL		
PT	PEAT	OL/OH	ORGANIC SOIL ORGANIC SOIL with SAND ORGANIC SOIL with GRAVEL SANDY ORGANIC SOIL SANDY ORGANIC SOIL with GRAVEL GRAVELLY ORGANIC SOIL GRAVELLY ORGANIC SOIL with SAND
	COBBLES COBBLES and BOULDERS BOULDERS		

FIELD AND LABORATORY TESTING

- (C) Consolidation (ASTM D 2435)
- (CL) Collapse Potential (ASTM D 5333)
- (CP) Compaction Curve (CTM 216)
- (CR) Corrosivity Testing (CTM 643, CTM 422, CTM 417)
- (CU) Consolidated Undrained Triaxial (ASTM D 4767)
- (DS) Direct Shear (ASTM D 3080)
- (EI) Expansion Index (ASTM D 4829)
- (M) Moisture Content (ASTM D 2216)
- (OC) Organic Content-% (ASTM D 2974)
- (P) Permeability (CTM 220)
- (PA) Particle Size Analysis (ASTM D 422)
- (PI) Plasticity Index (AASHTO T 90) Liquid Limit (AASHTO T 89)
- (PL) Point Load Index (ASTM D 5731)
- (PM) Pressure Meter
- (PP) Pocket Penetrometer
- (R) R-Value (CTM 301)
- (SE) Sand Equivalent (CTM 217)
- (SG) Specific Gravity (AASHTO T 100)
- (SL) Shrinkage Limit (ASTM D 427)
- (SW) Swell Potential (ASTM D 4546)
- (TV) Pocket Torvane
- (UC) Unconfined Compression-Soil (ASTM D 2166) Unconfined Compression-Rock (ASTM D 2938)
- (UU) Unconsolidated Undrained Triaxial (ASTM D 2850)
- (UW) Unit Weight (ASTM D 4767)
- (VS) Vane Shear (AASHTO T 223)

APPARENT DENSITY OF COHESIONLESS SOILS

Description	SPT N_{60} (Blows / 12 inches)
Very loose	0 - 4
Loose	5 - 10
Medium Dense	11 - 30
Dense	31 - 50
Very Dense	> 50

MOISTURE

Description	Criteria
Dry	Absence of moisture, dusty, dry to the touch
Moist	Damp but no visible water
Wet	Visible free water, usually soil is below water table

PERCENT OR PROPORTION OF SOILS

Description	Criteria
Trace	Particles are present but estimated to be less than 5%
Few	5 to 10%
Little	15 to 25%
Some	30 to 45%
Mostly	50 to 100%

PARTICLE SIZE

Description		Size
Boulder		> 12"
Cobble		3" to 12"
Gravel	Coarse	3/4" to 3"
	Fine	No. 4 to 3/4"
Sand	Coarse	No. 10 to No. 4
	Medium	No. 40 to No. 10
	Fine	No. 200 to No. 40

CEMENTATION

Description	Criteria
Weak	Crumbles or breaks with handling or little finger pressure.
Moderate	Crumbles or breaks with considerable finger pressure.
Strong	Will not crumble or break with finger pressure.

CONSISTENCY OF COHESIVE SOILS

Description	Unconfined Compressive Strength (tsf)	Pocket Penetrometer Measurement (tsf)	Torvane Measurement (tsf)	Field Approximation
Very Soft	< 0.25	< 0.25	< 0.12	Easily penetrated several inches by fist
Soft	0.25 to 0.50	0.25 to 0.50	0.12 to 0.25	Easily penetrated several inches by thumb
Medium Stiff	0.50 to 1.0	0.50 to 1.0	0.25 to 0.50	Penetrated several inches by thumb with moderate effort
Stiff	1 to 2	1 to 2	0.50 to 1.0	Readily indented by thumb but penetrated only with great effort
Very Stiff	2 to 4	2 to 4	1.0 to 2.0	Readily indented by thumbnail
Hard	> 4.0	> 4.0	> 2.0	Indented by thumbnail with difficulty

PLASTICITY OF FINE-GRAINED SOILS

Description	Criteria
Nonplastic	A 1/8-inch thread cannot be rolled at any water content.
Low	The thread can barely be rolled and the lump cannot be formed when drier than the plastic limit.
Medium	The thread is easy to roll and not much time is required to reach the plastic limit. The thread cannot be rerolled after reaching the plastic limit. The lump crumbles when drier than the plastic limit.
High	It takes considerable time rolling and kneading to reach the plastic limit. The thread can be rerolled several times after reaching the plastic limit. The lump can be formed without crumbling when drier than the plastic limit.

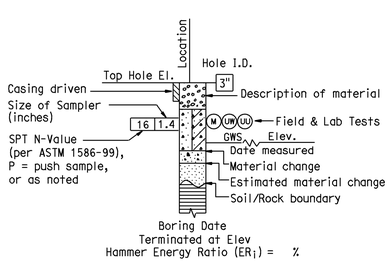

ROTARY BORING

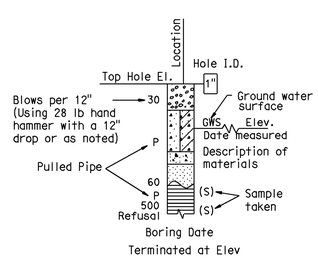

HAND BORING

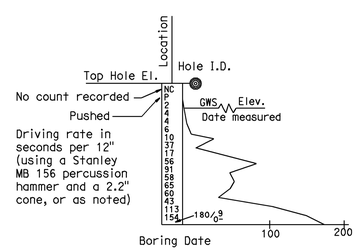

DYNAMIC CONE PENETRATION BORING

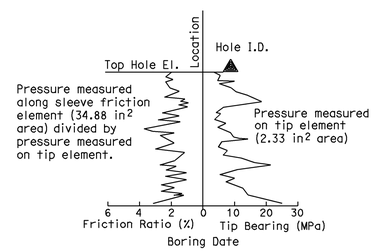

CONE PENETRATION TEST (CPT) SOUNDING

BOREHOLE IDENTIFICATION

Symbol	Hole Type	Description
Size	A	Auger Boring
Size	R P	Rotary drilled boring Rotary percussion boring (air)
Size HQ	R	Rotary drilled diamond core
Size	HD HA	Hand driven (1-inch soil tube) Hand Auger
●	D	Dynamic Cone Penetration Boring
◕	B	Hollow Stem Auger Boring (HSA)
▲	CPT	Cone Penetration Test (ASTM D 5778-95)
□	O	Other

Note: Size in inches.

RETAINING WALL NO. 646

SOIL LEGEND

LOG OF TEST BORINGS SHEET 2 OF 2

Jon Hamaguchi
DESIGN OVERSIGHT
6-9-09
SIGN OFF DATE

DRAWN BY K. Reyes
CHECKED BY H. Nofal

R. Bethapudi
FIELD INVESTIGATION BY:
DATE

PREPARED FOR THE STATE OF CALIFORNIA DEPARTMENT OF TRANSPORTATION

Ayman Salama
PROJECT ENGINEER

BRIDGE NO. 55E0094
POST MILES 19.70

ORIGINAL SCALE IN INCHES FOR REDUCED PLANS 0 1 2 3

CU 12220
EA 0F0321

DISREGARD PRINTS BEARING EARLIER REVISION DATES
REVISION DATES (PRELIMINARY STAGE ONLY) 02/27/09 04/27/09 04/27/09 06/08/09

SHEET 10 OF 10

FILE => 55e0094-z-1tb02.dgn

USERNAME => trrright DATE PLOTTED => 25-JAN-2010 TIME PLOTTED => 14:55

DIST	COUNTY	ROUTE	POST MILES TOTAL PROJECT	SHEET No	TOTAL SHEETS
12	Ora	57	18.4/20.9	788	856

REGISTERED CIVIL ENGINEER — DATE 06/08/09

1-25-10
PLANS APPROVAL DATE

REGISTERED PROFESSIONAL ENGINEER — XIAOYUN WU — No. 051245 — Exp. 09-30-09 — CIVIL — STATE OF CALIFORNIA

The State of California or its officers or agents shall not be responsible for the accuracy or completeness of electronic copies of this plan sheet.

OCTA
550 S. MAIN STREET
ORANGE, CA 92863

IDC CONSULTING ENGINEERS, INC.
203 WEST CERRITOS AVENUE
ANAHEIM, CA 92805

INDEX TO PLANS

SHEET No.	TITLE
1	GENERAL PLAN
2	FOUNDATION PLAN
3	TIEBACK WALL LAYOUT No. 1
4	TIEBACK WALL LAYOUT No. 2
5	CONSTRUCTION STAGING
6	LIMIT OF EXCAVATION & BACKFILL
7	TIEBACK WALL DETAIL
8	TIEBACK DETAIL
9	ARCHITECTURAL TREATMENT DETAILS
10	LOG OF TEST BORINGS SHEET 1 OF 3
11	LOG OF TEST BORINGS SHEET 2 OF 3
12	LOG OF TEST BORINGS SHEET 3 OF 3

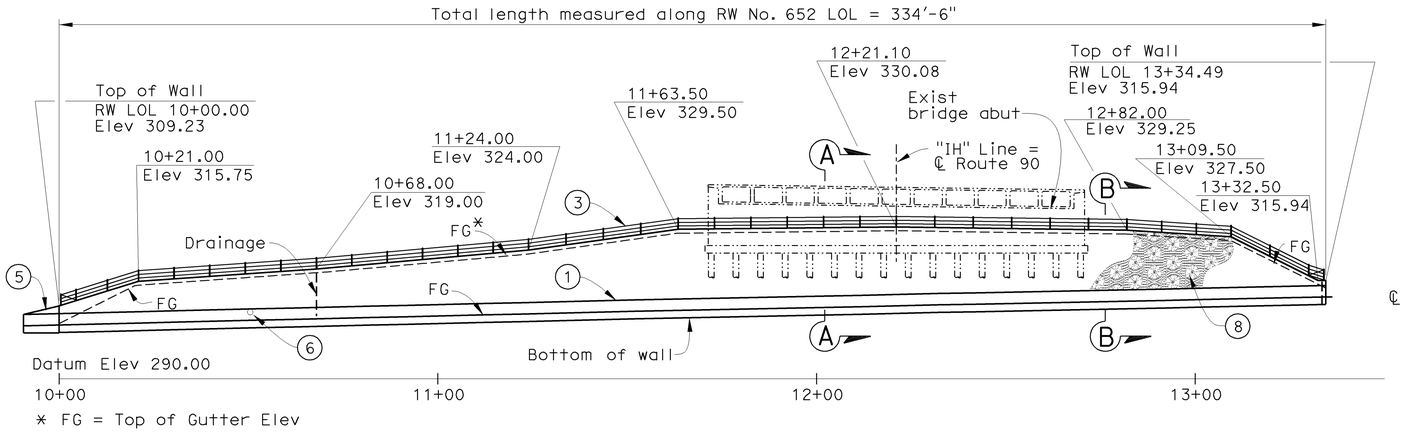

DEVELOPED MIRROR ELEVATION

1"=20'

STANDARD PLANS DATED MAY 2006

A10A	ACRONYMS AND ABBREVIATIONS (SHEET 1 OF 2)
A10B	ACRONYMS AND ABBREVIATIONS (SHEET 2 OF 2)
A10C	SYMBOLS (SHEET 1 OF 2)
A10D	SYMBOLS (SHEET 2 OF 2)
A76A	CONCRETE BARRIER TYPE 60
A77J3	METAL BEAM GUARD RAILING - CONNECTIONS TO ABUTMENTS AND WALLS
B0-3	BRIDGE DETAIL
B3-9	RETAINING WALL DETAILS No. 2
B11-47	CABLE RAILING

Standard Plan Sheet No.

Detail No.

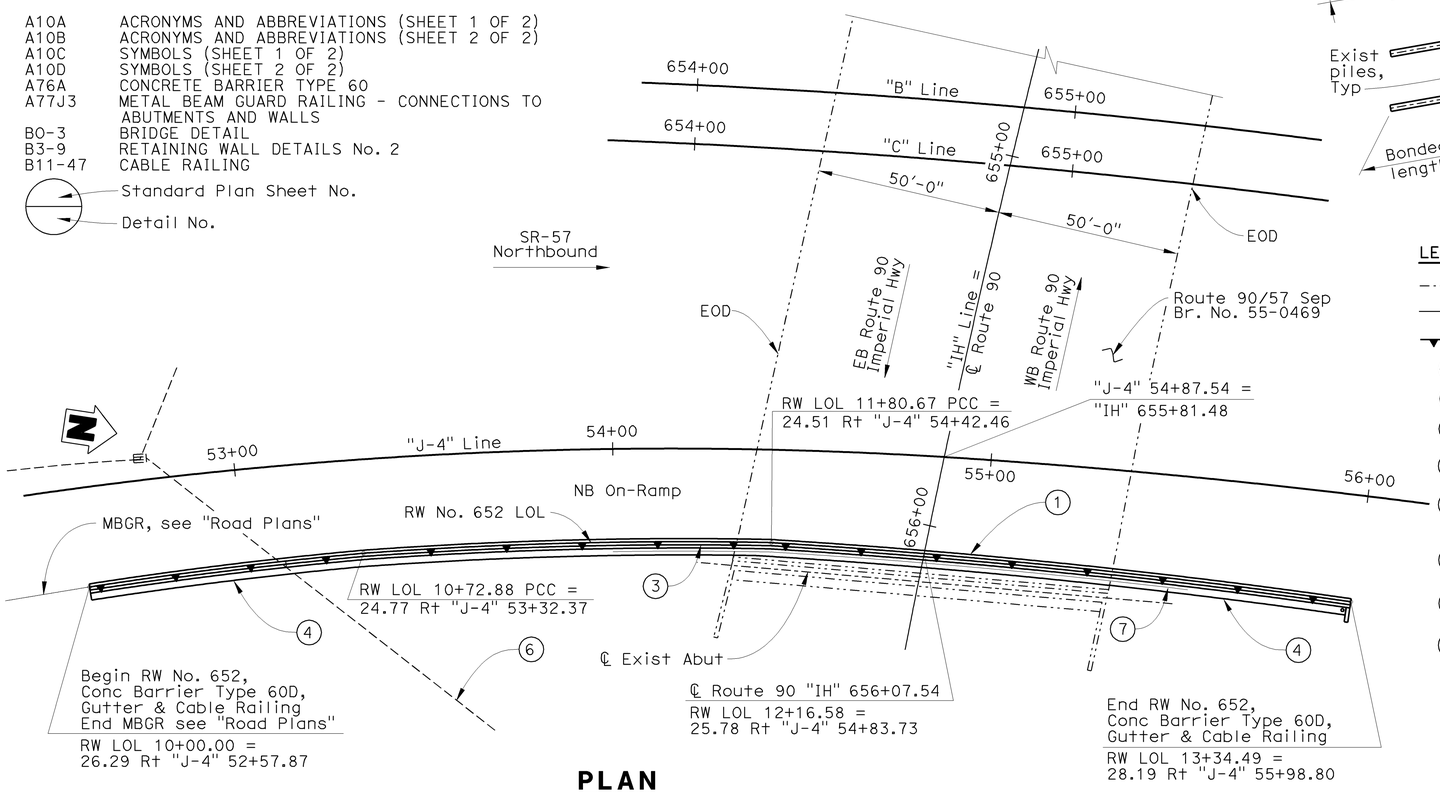

PLAN

1"=20'

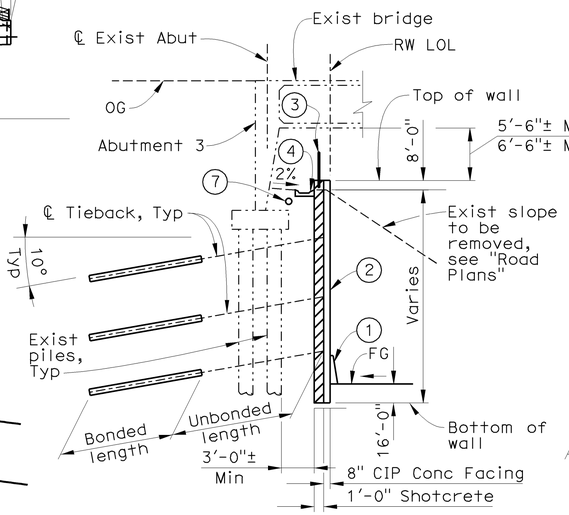

SECTION A-A

1/8" = 1'-0"

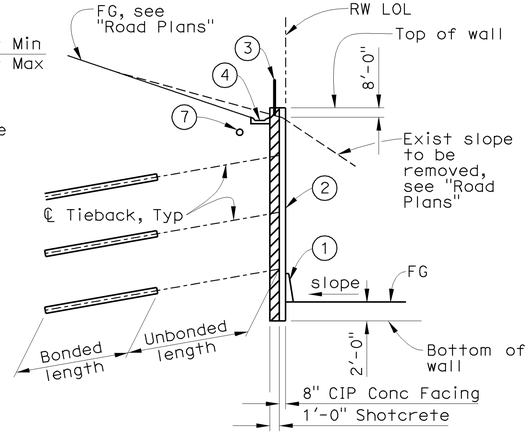

SECTION B-B

1/8" = 1'-0"

LEGEND:

- Indicates existing structure
- Indicates new structure
- Indicates tieback wall

1. Conc Barrier, Type 60D
2. Tieback Wall
3. Cable Railing, see "Caltrans Standard Plan B11-47"
4. Gutter, see "Caltrans Standard Plan B3-9"
5. Anchor block for transition railing connection, see "Caltrans Standard Plan A77J3"
6. Exist 18" ø RCP (to be removed), See Road plans
7. Irrigation crossover, see Irrigation Plans
8. Architectural Surface (Textured Concrete), See "Architectural Treatment Details" sheet

RETAINING WALL NO 652

QUANTITIES		
STRUCTURE EXCAVATION (TIEBACK WALL)	670	CY
STRUCTURE EXCAVATION (TYPE Y-1) (AERIALLY DEPOSITED LEAD)	26	CY
STRUCTURE BACKFILL (TIEBACK WALL)	100	CY
TIEBACK ANCHOR	107	EA
STRUCTURAL CONCRETE, RETAINING WALL	173	CY
FORMED RELIEF TEXTURE (FLOWERED PATTERN)	2,350	SQFT
FRACTURED RIB TEXTURE	2,350	SQFT
BAR REINFORCING STEEL (RETAINING WALL)	30,100	LB
SHOTCRETE	209	CY
MINOR CONCRETE (MISCELLANEOUS CONSTRUCTION)	12	CY
CABLE RAILING	340	LF
CONCRETE BARRIER (TYPE 60D)	335	LF

NOTE:

The Contractor shall verify all controlling field dimensions before ordering or fabricating any materials

DESIGN OVERSIGHT — Jon Hamaguchi — 6-9-09 SIGN OFF DATE	DESIGN	BY X. Wu	CHECKED D. Sun	LOAD FACTOR DESIGN	LIVE LOADING: HL-93 AND PERMIT (P-15) DESIGN LOAD
	DETAILS	BY X. Wu	CHECKED D. Sun	LAYOUT	BY G. Estepa — CHECKED S. Sharifan
	QUANTITIES	BY P. Kaviani	CHECKED B. Ho	SPECIFICATIONS	BY M. Remolador — PLANS AND SPECS COMPARED X. Wu

PREPARED FOR THE STATE OF CALIFORNIA DEPARTMENT OF TRANSPORTATION

Xiaoyun Wu
PROJECT ENGINEER

BRIDGE NO. 55-0469
POST MILES 19.87

RETAINING WALL No. 652
GENERAL PLAN

DESIGN GENERAL PLAN SHEET (ENGLISH) (REV. 2/25/05)

ORIGINAL SCALE IN INCHES FOR REDUCED PLANS 0 1 2 3

CU 12220
EA 0F0321

DISREGARD PRINTS BEARING EARLIER REVISION DATES — REVISION DATES (PRELIMINARY STAGE ONLY) 02/18/09 04/07/09 06/08/09

SHEET 1 OF 12

FILE => 55-0469-a-gp.dgn

USERNAME => s135518 DATE PLOTTED => 25-JAN-2010 TIME PLOTTED => 15:23

DIST	COUNTY	ROUTE	POST MILES TOTAL PROJECT	SHEET No	TOTAL SHEETS
12	Ora	57	18.4/20.9	789	856

REGISTERED CIVIL ENGINEER — DATE 06/08/09

1-25-10
PLANS APPROVAL DATE

REGISTERED PROFESSIONAL ENGINEER — XIAOYUN WU — No. 051245 — Exp. 09-30-09 — CIVIL — STATE OF CALIFORNIA

The State of California or its officers or agents shall not be responsible for the accuracy or completeness of electronic copies of this plan sheet.

OCTA
550 S. MAIN STREET
ORANGE, CA 92863

IDC CONSULTING ENGINEERS, INC.
203 WEST CERRITOS AVENUE
ANAHEIM, CA 92805

CURVE DATA

(1) RW652 LOL
R = 1153.95
Δ = 3°37'08"
T = 36.454
L = 72.885

(2) RW652 LOL
R = 1177.00
Δ = 5°14'50"
T = 53.933
L = 107.791

(3) RW652 LOL
R = 1905.00
Δ = 4°37'35"
T = 76.952
L = 153.820

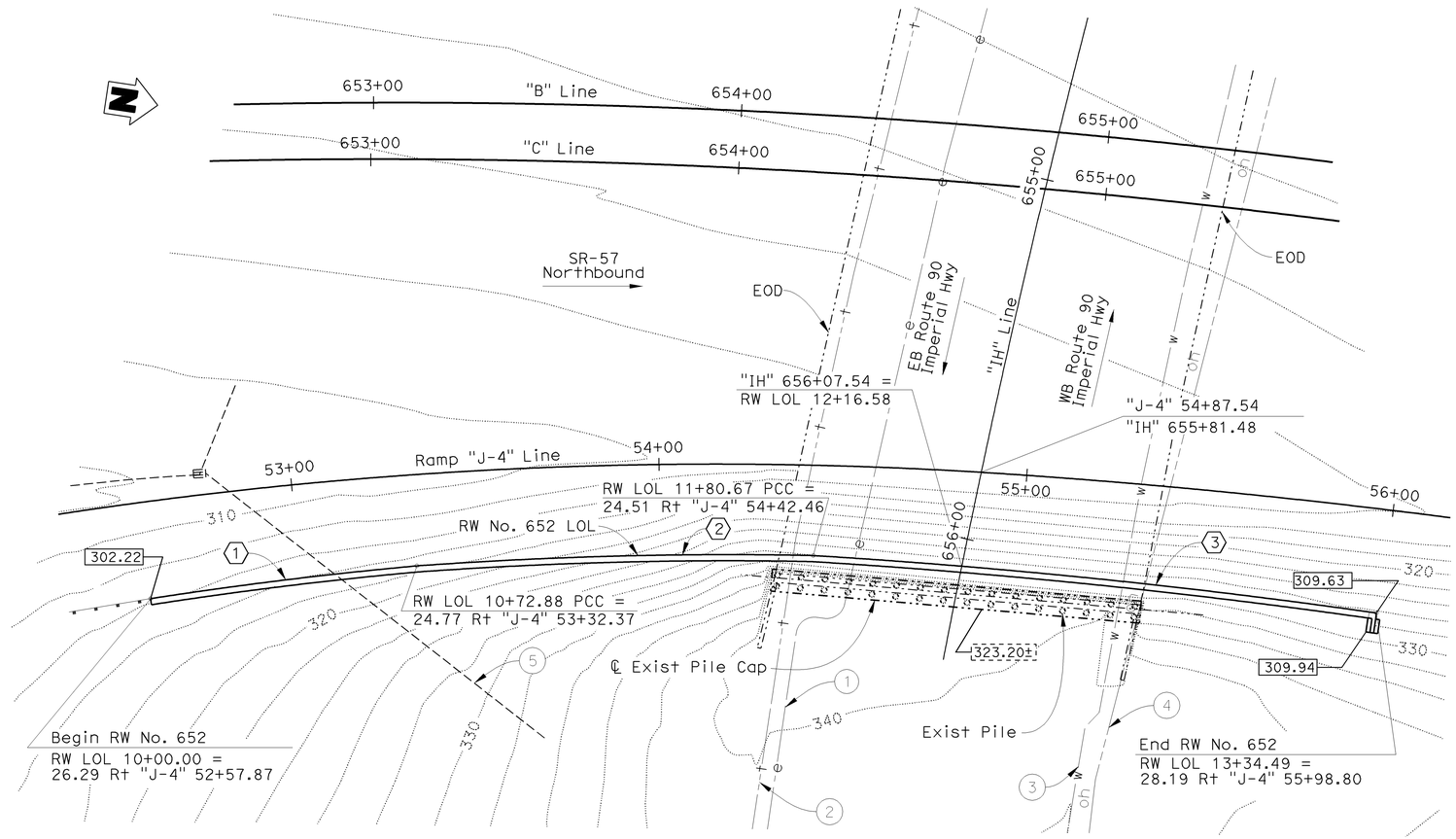

PLAN
1"=20'

LEGEND:

- Indicates Exist structure
- Indicates new construction
- XXX.XX — Indicates bottom of wall elevation
- XXX.XX — Exist bottom of abutment footing
- Exist pile

BENCHMARK & DATUM

Horizontal Datum: NAD83 1991.35.CCS83 ZONE 6 - from primary control provided by RBF/OCS
Vertical Datum: NAD-88 (1995 ADJ) - from primary control provided by RBF/OCS.

Pt. 1069 Elevation = 305.442
Set Mag Nail & Flash in Shoulder
Northing 2278210.836 Easting 6066285.157

Pt. 1071 Elevation = 319.286
Set Mag Nail & Flash in Shoulder
Northing 2278712.581 Easting 6065964.901

Pt. 1050 Elevation = 326.908
Set Mag Nail & Flash in Shoulder
Northing 2279503.786 Easting 6066168.912

EXISTING UTILITY LINES TABLE
(BASED ON UTILITY PLAN)

NO.	UTILITY	ACTION
1	Exist Elect (in girder)	Protect in place
2	Exist Tel line (in girder)	Protect in place
3	Exist 8" water line (hung on girder N. face)	Protect in place
4	Exist overhead Elect	Protect in place
5	Exist 18" Ø RCP	To be removed

NOTE: The Contractor shall verify all controlling field dimensions before ordering or fabricating any materials.

GEOTECHNICAL PROFESSIONAL — APPROVAL DATE

DESIGN OVERSIGHT — Jon Hamaguchi
6-9-09
SIGN OFF DATE

SCALE:	VERT.DATUM	HORZ.DATUM
PHOTOGRAMMETRY AS OF:	ALIGNMENT TIES	
SURVEYED BY	DRAFTED BY G. Estepa	
FIELD CHECKED BY	CHECKED BY S. Sharifan	

DESIGN	BY X. Wu	CHECKED D. Sun	
DETAILS	BY X. Wu	CHECKED D. Sun	
QUANTITIES	BY P. Kaviani	CHECKED B. Ho	

PREPARED FOR THE STATE OF CALIFORNIA DEPARTMENT OF TRANSPORTATION

Xiaoyun Wu
PROJECT ENGINEER

BRIDGE NO. 55-0469
POST MILE 19.87

RETAINING WALL No. 652
FOUNDATION PLAN

FOUNDATION PLAN SHEET (ENGLISH) (REV. 2-25-05)

ORIGINAL SCALE IN INCHES FOR REDUCED PLANS 0 1 2 3

CU 12220
EA 0F0321

DISREGARD PRINTS BEARING EARLIER REVISION DATES — REVISION DATES (PRELIMINARY STAGE ONLY) 05/15/09 04/07/09 06/08/09

SHEET 2 OF 12

FILE => 55-0469-e-fnd.dgn

USERNAME => s135318 DATE PLOTTED => 25-JAN-2010 TIME PLOTTED => 15:23

DIST	COUNTY	ROUTE	POST MILES TOTAL PROJECT	SHEET No	TOTAL SHEETS
12	Ora	57	18.4/20.9	790	856

REGISTERED CIVIL ENGINEER — DATE 06/08/09

1-25-10
PLANS APPROVAL DATE

REGISTERED PROFESSIONAL ENGINEER — XIAOYUN WU — No. 051245 — Exp. 09-30-09 — CIVIL — STATE OF CALIFORNIA

The State of California or its officers or agents shall not be responsible for the accuracy or completeness of electronic copies of this plan sheet.

OCTA
550 S. MAIN STREET
ORANGE, CA 92863

IDC CONSULTING ENGINEERS, INC.
203 WEST CERRITOS AVENUE
ANAHEIM, CA 92805

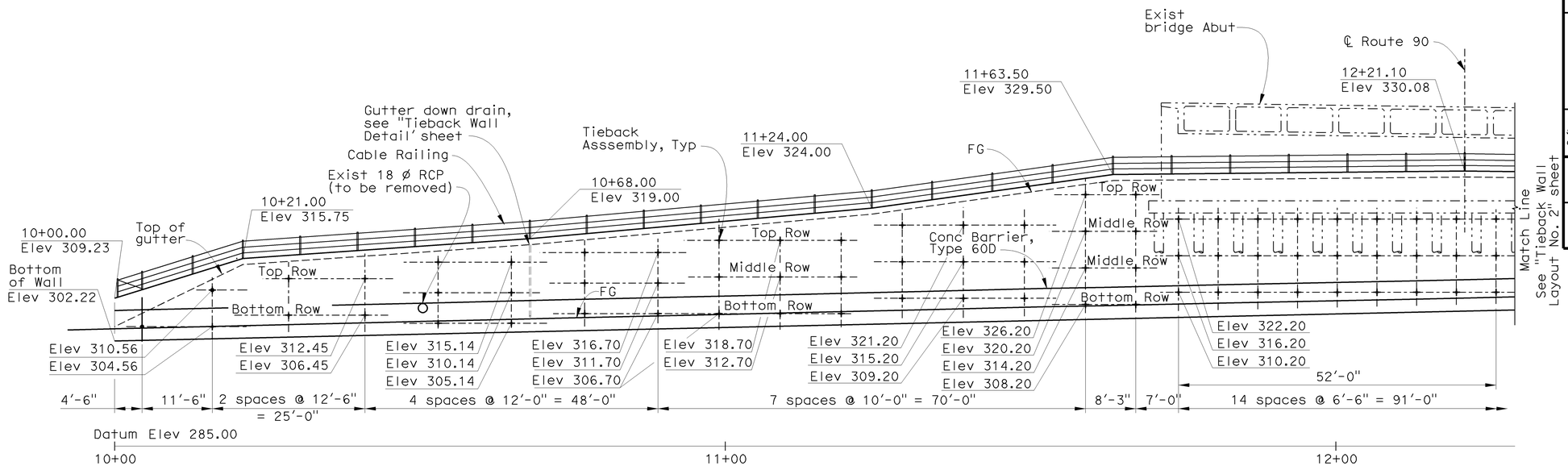

DEVELOPED MIRROR ELEVATION

1"=10'

LEGEND:

+ Location of Tieback Assembly

NOTE:

1. For stations and elevations of Top of Tieback Wall, see "General Plan" sheet
2. For gutter down drain outlet detail, see "Tieback Wall Detail" sheet
3. For expansion joint and weakened plane details, see "Caltrans Standard Plan B0-3"

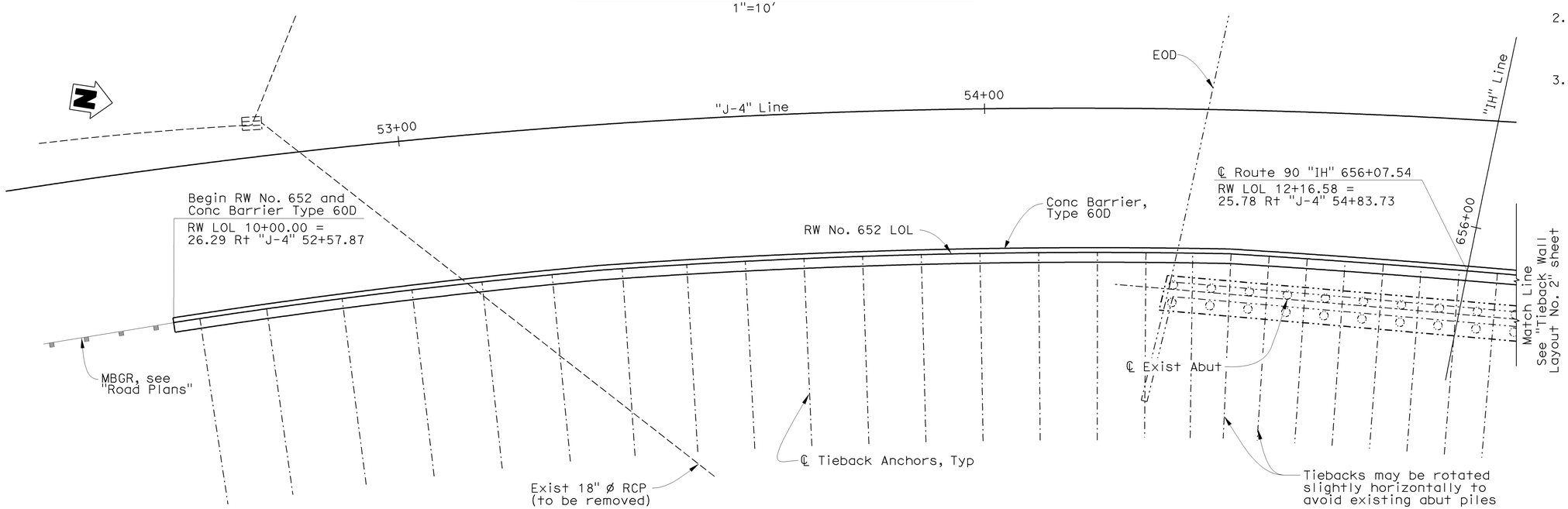

PLAN

1"=10'

NOTE: The Contractor shall verify all controlling field dimensions before ordering or fabricating any materials.

DESIGN OVERSIGHT — Jon Hamaguchi
6-9-09
SIGN OFF DATE

	BY	CHECKED
DESIGN	X. Wu	D. Sun
DETAILS	X. Wu	D. Sun
QUANTITIES	P. Kaviani	B. Ho

PREPARED FOR THE STATE OF CALIFORNIA DEPARTMENT OF TRANSPORTATION

Xiaoyun Wu
PROJECT ENGINEER

BRIDGE NO. 55-0469
POST MILE 19.87

RETAINING WALL No. 652
TIEBACK WALL LAYOUT No. 1

DESIGN DETAIL SHEET (ENGLISH) (REV. 2/25/05)

ORIGINAL SCALE IN INCHES FOR REDUCED PLANS 0 1 2 3

CU 12220
EA 0F0321

DISREGARD PRINTS BEARING EARLIER REVISION DATES

REVISION DATES (PRELIMINARY STAGE ONLY) 02/24/09 04/07/09 06/08/09

SHEET 3 OF 12

FILE => 55-0469-g-rw_lo1.dgn

USERNAME => s135318 DATE PLOTTED => 25-JAN-2010 TIME PLOTTED => 15:23

DIST	COUNTY	ROUTE	POST MILES TOTAL PROJECT	SHEET No	TOTAL SHEETS
12	Ora	57	18.4/20.9	791	856

REGISTERED CIVIL ENGINEER — DATE 06/08/09

1-25-10
PLANS APPROVAL DATE

REGISTERED PROFESSIONAL ENGINEER — XIAOYUN WU — No. 051245 — Exp. 09-30-09 — CIVIL — STATE OF CALIFORNIA

The State of California or its officers or agents shall not be responsible for the accuracy or completeness of electronic copies of this plan sheet.

OCTA
550 S. MAIN STREET
ORANGE, CA 92863

IDC CONSULTING ENGINEERS, INC.
203 WEST CERRITOS AVENUE
ANAHEIM, CA 92805

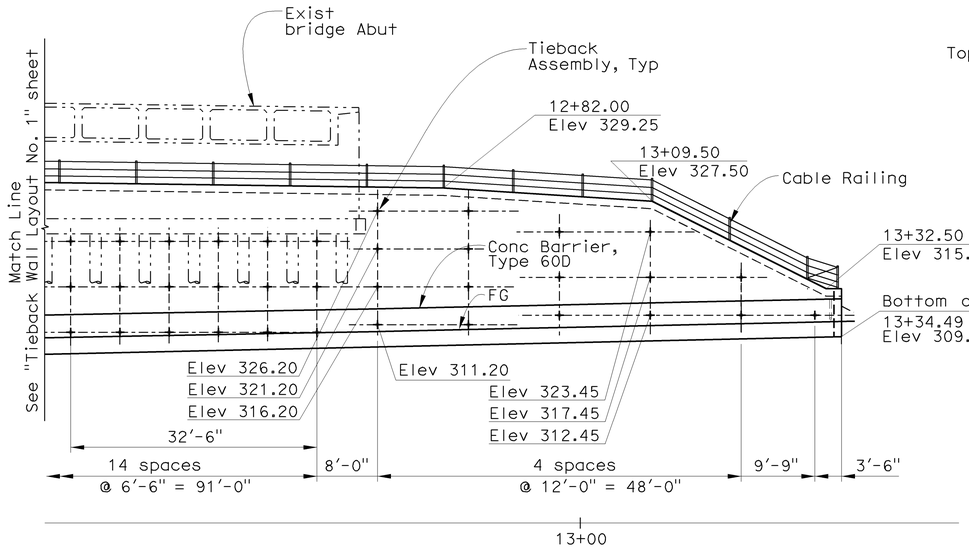

DEVELOPED MIRROR ELEVATION

1"=10'

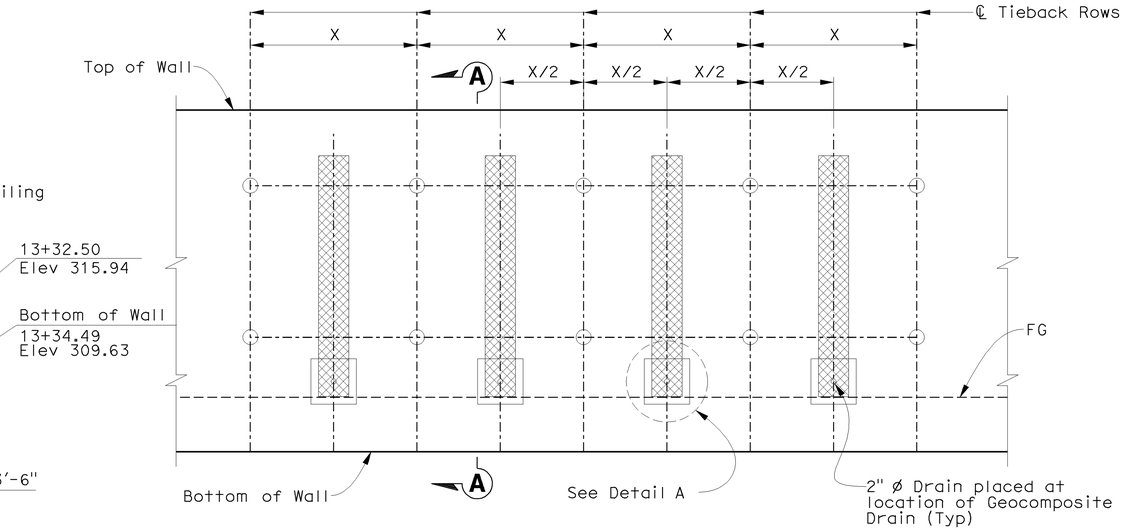

PART ELEVATION GEOCOMPOSITE DRAIN

No Scale

NOTES:

1. For stations and elevations of Top of Tieback Wall, see General Plan" sheet
2. Center Geocomposite Drain Between Tieback Assemblies.
3. Geocomposite Drain is not required for wall heights less than 7'-0".
4. Sawcut in Drain Pipe should maintain a snug fit for Drain Pipe connection to Geocomposite Drain.
5. 1'-0" Min Splice length required for Geocomposite Drains.
6. Required min clearance between bottom of tieback wall and bottom of Geocomposite drain is 5 inches.
7. X-distance from ℄ tieback to ℄ tieback see "Tieback Layout No. 1" and "Tieback Layout No. 2"
8. For expansion joint and weakened plane details, see Caltrans Standard Plan B0-3"
9. For gutter down drain outlet detail, see "Tieback Wall Detail" sheet

LEGEND

+ Location of Tieback Assembly

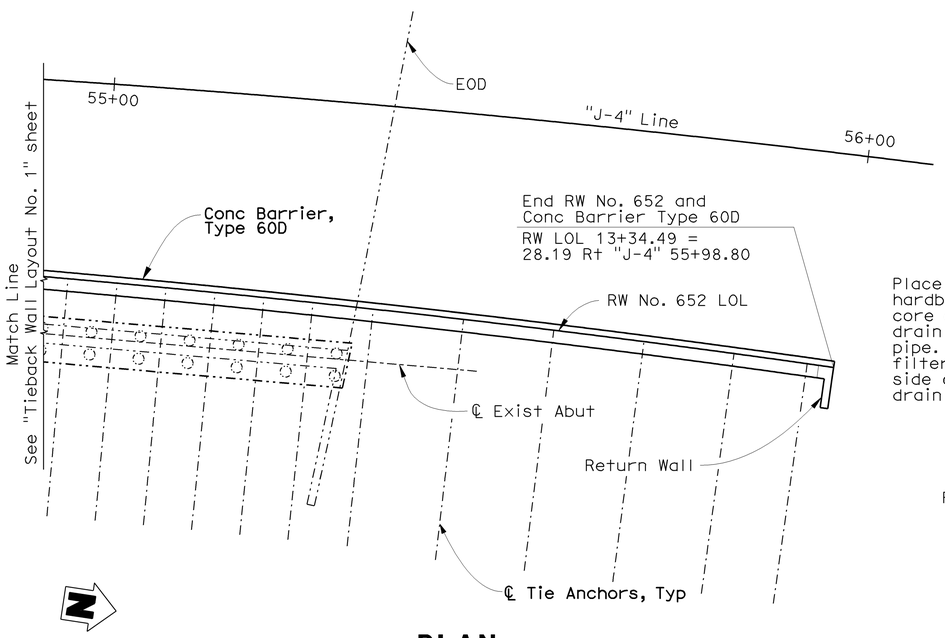

PLAN

1"=10'

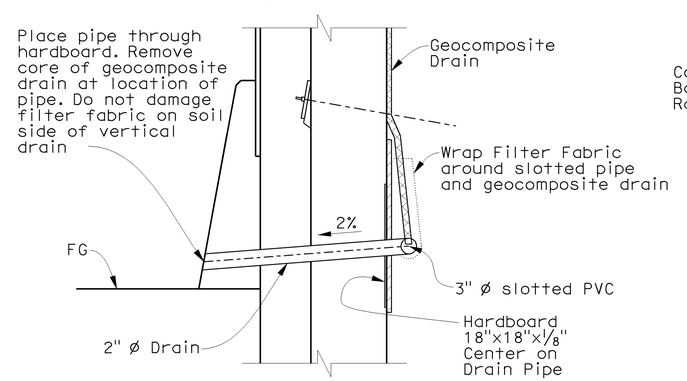

DETAIL B

No Scale

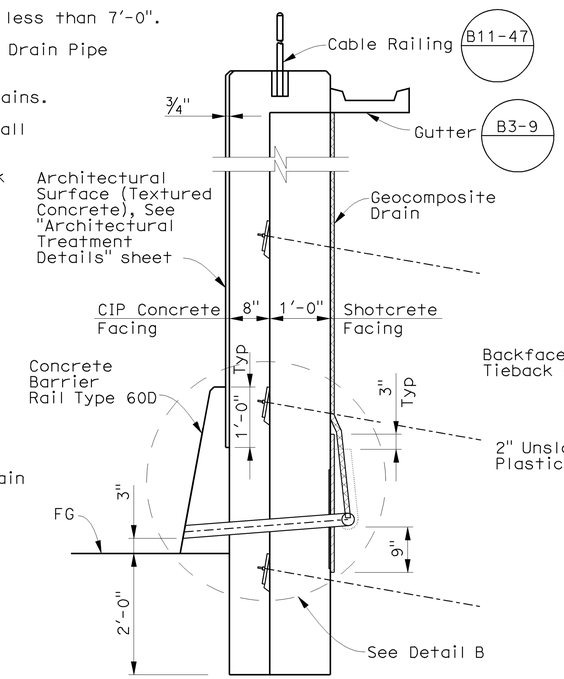

SECTION A-A

No Scale

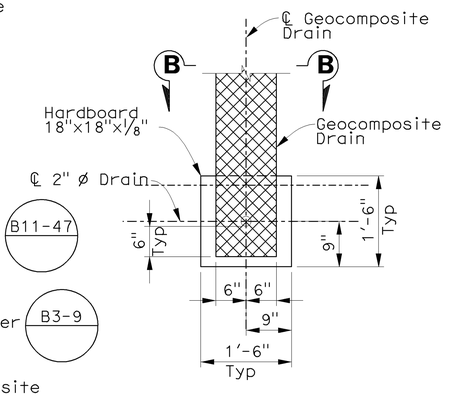

DETAIL A

No Scale

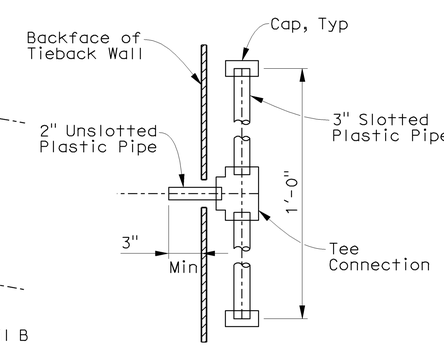

SECTION B-B

No Scale

NOTE: The Contractor shall verify all controlling field dimensions before ordering or fabricating any materials.

DESIGN OVERSIGHT — Jon Hamaguchi
6-9-09
SIGN OFF DATE

	BY	CHECKED
DESIGN	X. Wu	D. Sun
DETAILS	X. Wu	D. Sun
QUANTITIES	P. Kaviani	B. Ho

PREPARED FOR THE STATE OF CALIFORNIA DEPARTMENT OF TRANSPORTATION

Xiaoyun Wu
PROJECT ENGINEER

BRIDGE NO. 55-0469
POST MILE 19.87

RETAINING WALL No. 652
TIEBACK WALL LAYOUT No. 2

DESIGN DETAIL SHEET (ENGLISH) (REV. 2/25/05)

ORIGINAL SCALE IN INCHES FOR REDUCED PLANS 0 1 2 3

CU 12220
EA 0F0321

DISREGARD PRINTS BEARING EARLIER REVISION DATES

REVISION DATES (PRELIMINARY STAGE ONLY) 02/18/09 04/17/09 06/08/09

SHEET 4 OF 12

FILE => 55-0469-g-rw_lo2.dgn

USERNAME => s135318 DATE PLOTTED => 25-JAN-2010 TIME PLOTTED => 15:23

DIST	COUNTY	ROUTE	POST MILES TOTAL PROJECT	SHEET No	TOTAL SHEETS
12	Ora	57	18.4/20.9	792	856

REGISTERED CIVIL ENGINEER — DATE 06/08/09

1-25-10
PLANS APPROVAL DATE

REGISTERED PROFESSIONAL ENGINEER — XIAOYUN WU — No. 051245 — Exp. 09-30-09 — CIVIL — STATE OF CALIFORNIA

The State of California or its officers or agents shall not be responsible for the accuracy or completeness of electronic copies of this plan sheet.

OCTA
550 S. MAIN STREET
ORANGE, CA 92863

IDC CONSULTING ENGINEERS, INC.
203 WEST CERRITOS AVENUE
ANAHEIM, CA 92805

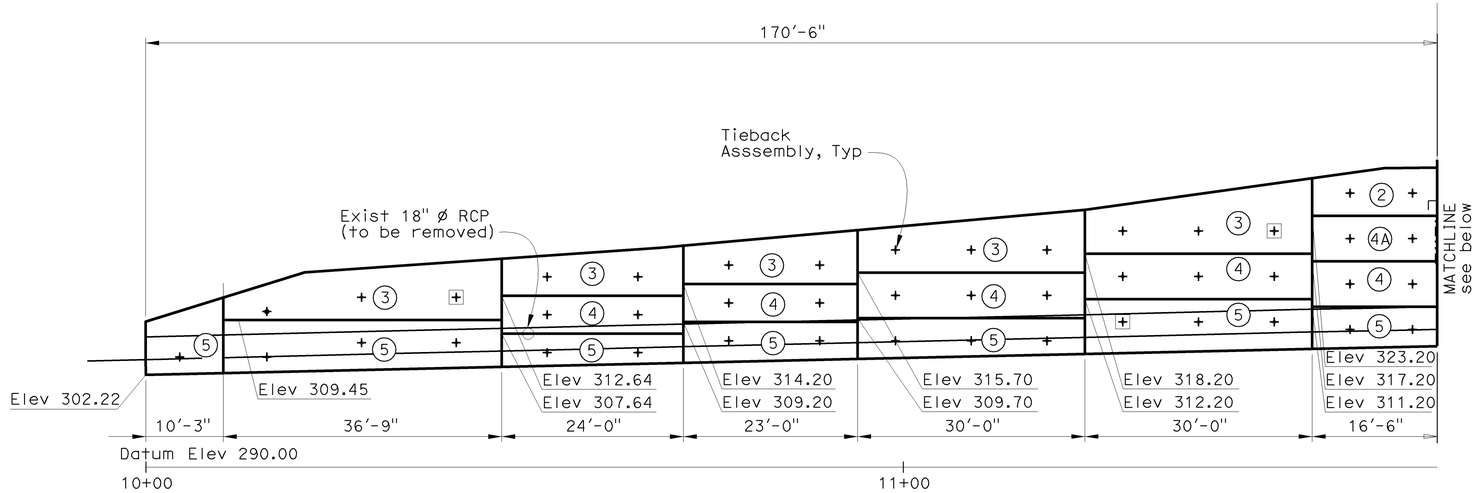

DEVELOPED MIRROR ELEVATION

1"=10'

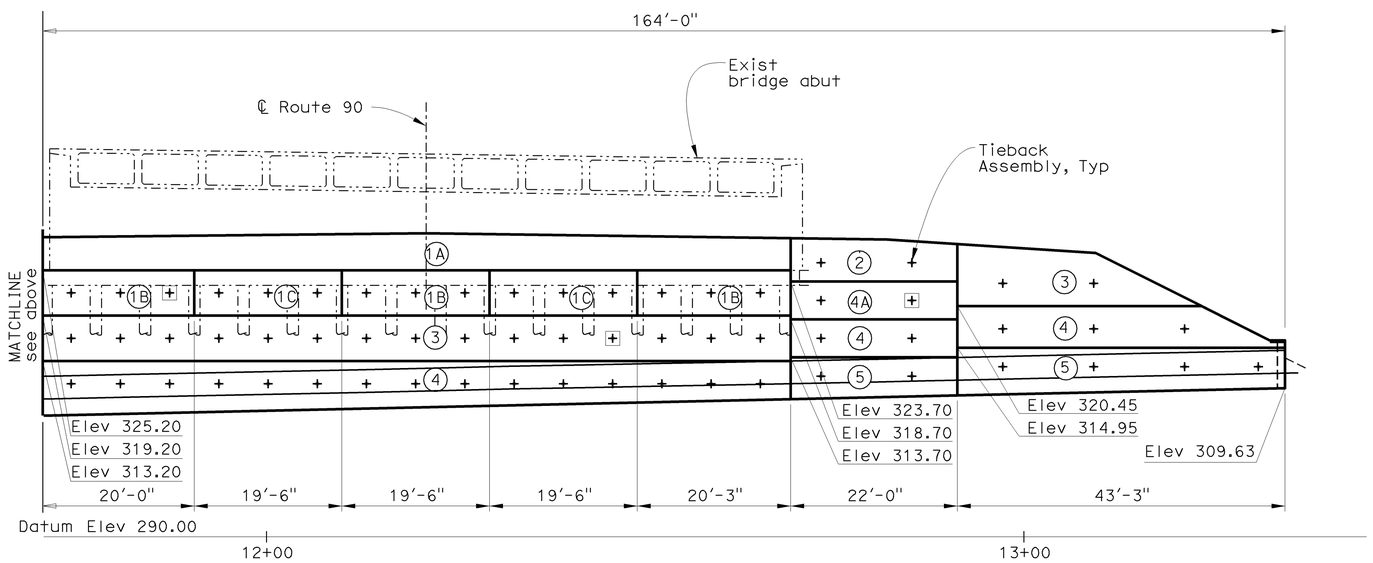

DEVELOPED MIRROR ELEVATION

1"=10'

NOTES

1. Excavation of segment (1A) shall not proceed deeper than the top of existing abutment footing elevation.
2. Excavation of segments (1B) and (1C) in front of existing abutment shall be alternated so that there is a gap of unexcavated soil provided between each excavation of three tendons width, or 20'-3" maximum as shown on plans.
3. First row of tiebacks in front of the existing abutment shall not be placed deeper than 1'-0" below the bottom of footing.
4. Tiebacks shall not be proof-tested and locked off until the tieback wall shotcrete facing has developed the specified unconfined compressive strength.
5. Excavation for the segment (2), (3), (4), (4A) and (5) shall not proceed deeper than the dimension as shown on the plan. The staging in the front of existing abutment shall not leave more than half of the critical vertical wall face unsupported by shotcrete at any time.
6. Excavation of segments (4) and (5) are the last order of the construction.
7. For vertical limit of excavation in segments, see "Limits of Excavation and Backfill" sheet.
8. Cable Railing not shown.
9. See Road Plans for grading.
10. For top of wall elevations and locations, see "Tieback Wall Layout" sheets.

LEGENDS

+ Location of Tieback Assembly

(n) Order of Construction Staging

—— Limits of Construction Staging

[+] Tieback Assembly Requiring Performance Test

NOTE: The Contractor shall verify all controlling field dimensions before ordering or fabricating any materials.

DESIGN OVERSIGHT — Jon Hamaguchi
6-9-09
SIGN OFF DATE

	BY	CHECKED
DESIGN	X. Wu	D. Sun
DETAILS	X. Wu	D. Sun
QUANTITIES	P. Kaviani	B. Ho

PREPARED FOR THE STATE OF CALIFORNIA DEPARTMENT OF TRANSPORTATION

Xiaoyun Wu
PROJECT ENGINEER

BRIDGE NO. 55-0469
POST MILE 19.87

RETAINING WALL No. 652
CONSTRUCTION STAGING

DESIGN DETAIL SHEET (ENGLISH) (REV. 2/25/05)

ORIGINAL SCALE IN INCHES FOR REDUCED PLANS 0 1 2 3

CU 12220
EA 0F0321

DISREGARD PRINTS BEARING EARLIER REVISION DATES — REVISION DATES (PRELIMINARY STAGE ONLY) 02/11/09 04/07/09 06/08/09

SHEET 5 OF 12

FILE => 55-0469-g-rw_cs.dgn

USERNAME => s135318 DATE PLOTTED => 25-JAN-2010 TIME PLOTTED => 15:23

DIST	COUNTY	ROUTE	POST MILES TOTAL PROJECT	SHEET No	TOTAL SHEETS
12	Ora	57	18.4/20.9	793	856

REGISTERED CIVIL ENGINEER — DATE 06/08/09

1-25-10
PLANS APPROVAL DATE

REGISTERED PROFESSIONAL ENGINEER — XIAOYUN WU — No. 051245 — Exp. 09-30-09 — CIVIL — STATE OF CALIFORNIA

The State of California or its officers or agents shall not be responsible for the accuracy or completeness of electronic copies of this plan sheet.

OCTA
550 S. MAIN STREET
ORANGE, CA 92863

IDC CONSULTING ENGINEERS, INC.
203 WEST CERRITOS AVENUE
ANAHEIM, CA 92805

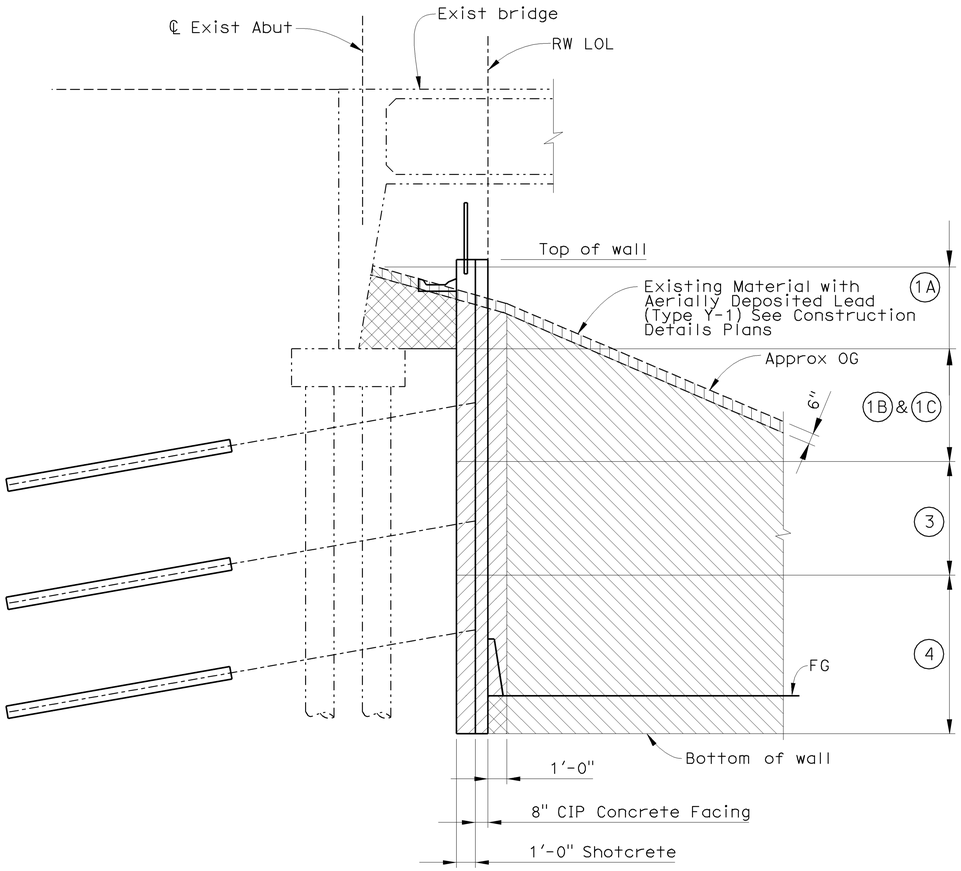

AT TIEBACK SECTION A-A IN FRONT OF THE ABUTMENT

No Scale

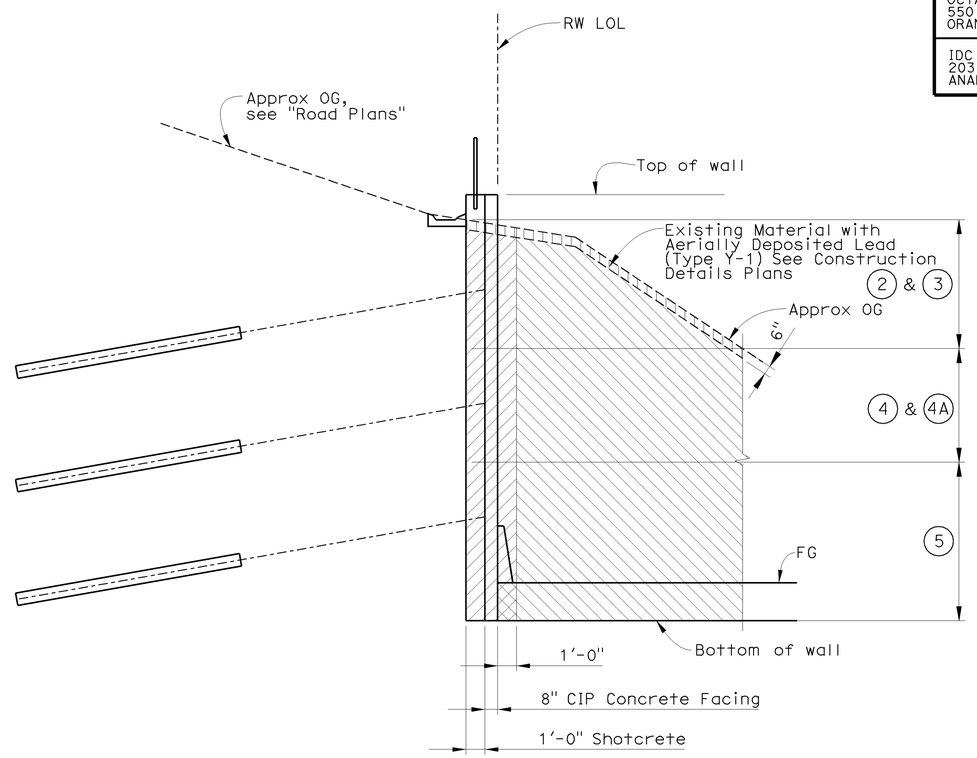

AT TIEBACK SECTION B-B AWAY FROM THE ABUTMENT

No Scale

LEGEND

- Structure Tieback Wall Excavation, Type Y-1 (Aerially Deposited Lead)
- Structure Tieback Wall Excavation
- Structure Tieback Wall Excavation and Structure Backfill
- Structure Tieback Wall Excavation, Type Y-1 (Aerially Deposited Lead) and Structure Backfill
- Roadway Excavation, see "Road Plans"
- Order of Construction Staging, see "Construction Staging" plan.

NOTE

1. For Tieback Wall Section A-A and B-B, see "General Plan".

NOTE: The Contractor shall verify all controlling field dimensions before ordering or fabricating any materials.

DESIGN OVERSIGHT — Jon Hamaguchi
6-9-09
SIGN OFF DATE

	BY	CHECKED
DESIGN	X. Wu	D. Sun
DETAILS	X. Wu	D. Sun
QUANTITIES	P. Kaviani	B. Ho

PREPARED FOR THE STATE OF CALIFORNIA DEPARTMENT OF TRANSPORTATION

Xiaoyun Wu
PROJECT ENGINEER

BRIDGE NO. 55-0469
POST MILE 19.87

RETAINING WALL No. 652
LIMIT OF EXCAVATION & BACKFILL

DESIGN DETAIL SHEET (ENGLISH) (REV. 2/25/05)

ORIGINAL SCALE IN INCHES FOR REDUCED PLANS 0 1 2 3

CU 12220
EA 0F0321

DISREGARD PRINTS BEARING EARLIER REVISION DATES — REVISION DATES (PRELIMINARY STAGE ONLY) 02/11/09 04/17/09 06/08/09

SHEET 6 OF 12

FILE => 55-0469-g-rw_ex.dgn

USERNAME => s135318 DATE PLOTTED => 25-JAN-2010 TIME PLOTTED => 15:23

DIST	COUNTY	ROUTE	POST MILES TOTAL PROJECT	SHEET No	TOTAL SHEETS
12	Ora	57	18.4/20.9	794	856

REGISTERED CIVIL ENGINEER — DATE 06/08/09

1-25-10
PLANS APPROVAL DATE

REGISTERED PROFESSIONAL ENGINEER — XIAOYUN WU — No. 051245 — Exp. 09-30-09 — CIVIL — STATE OF CALIFORNIA

The State of California or its officers or agents shall not be responsible for the accuracy or completeness of electronic copies of this plan sheet.

OCTA
550 S. MAIN STREET
ORANGE, CA 92863

IDC CONSULTING ENGINEERS, INC.
203 WEST CERRITOS AVENUE
ANAHEIM, CA 92805

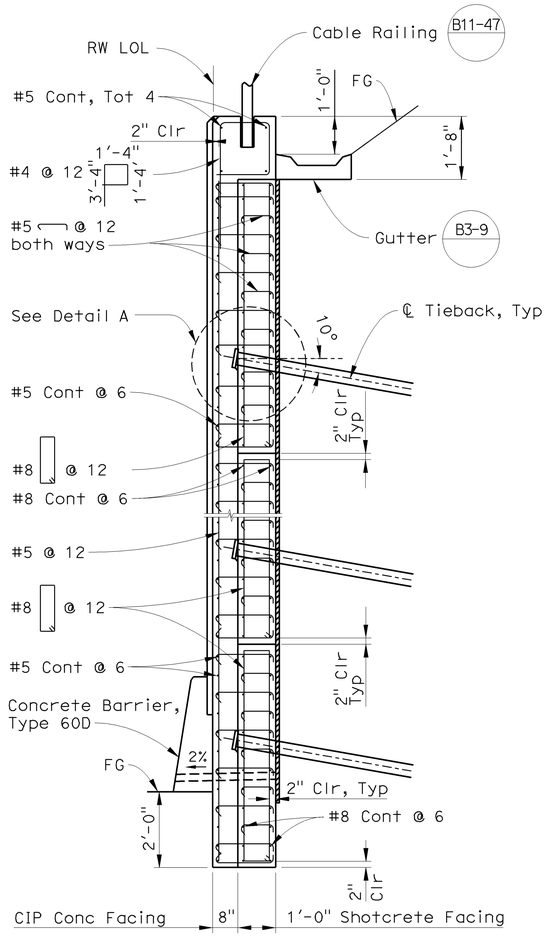

TYPICAL TIEBACK WALL SECTION

1/2" = 1'-0"

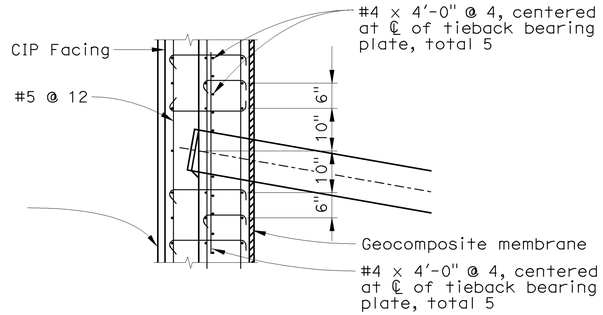

DETAIL A

No Scale

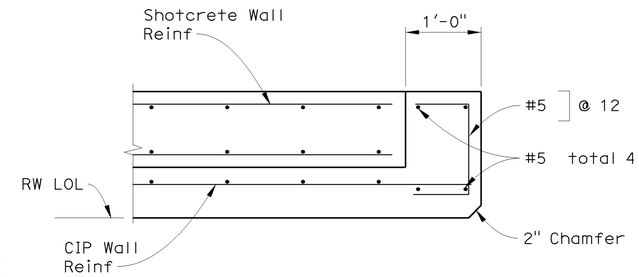

END WALL DETAIL

No Scale

NOTES

1. Number of Tieback varies, see "Tieback Layout" sheet
2. For Location of Construction Joint, see "Construction Staging" sheet
3. For Gutter & Wall Drain details, see "Caltrans Standard Plans, B3-9" and "Tieback Wall Layout No. 2" sheets

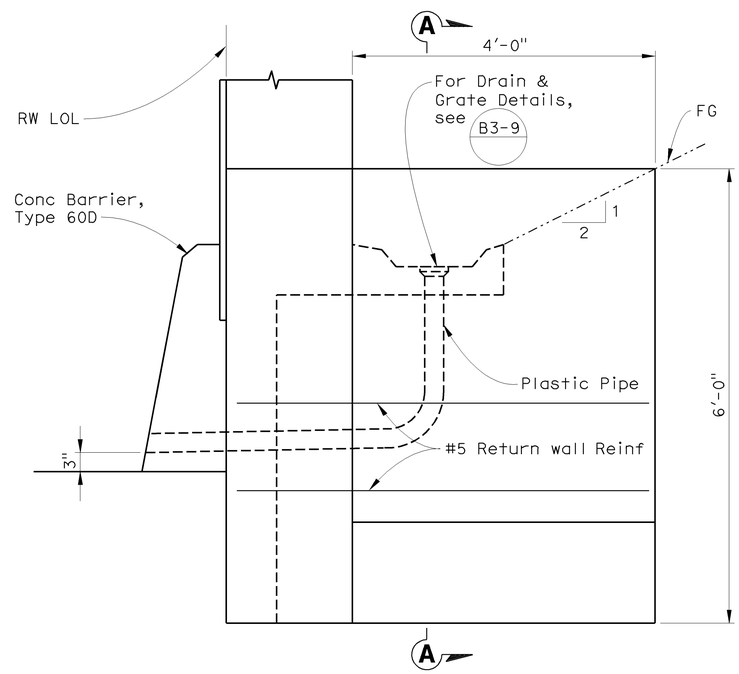

GUTTER OUTLET AT RETURN WALL

1" = 1'-0"

NOTE: Gutter Outlet at tieback wall similar

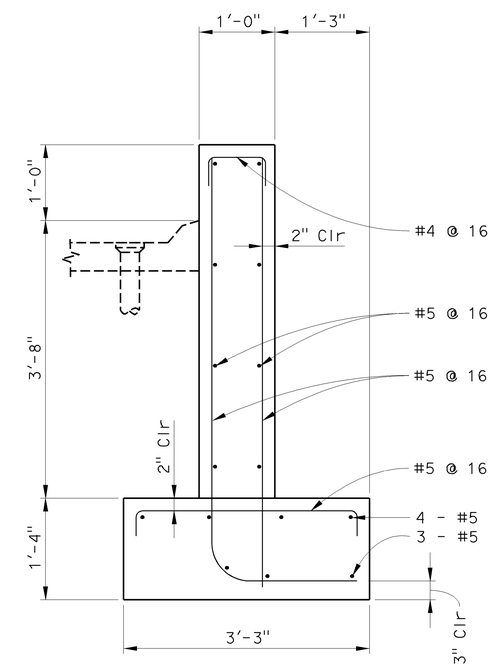

SECTION A-A

1" = 1'-0"

NOTE: The Contractor shall verify all controlling field dimensions before ordering or fabricating any materials.

DESIGN OVERSIGHT — Jon Hamaguchi
6-9-09
SIGN OFF DATE

	BY	CHECKED
DESIGN	X. Wu	D. Sun
DETAILS	X. Wu	D. Sun
QUANTITIES	P. Kaviani	B. Ho

PREPARED FOR THE STATE OF CALIFORNIA DEPARTMENT OF TRANSPORTATION

Xiaoyun Wu
PROJECT ENGINEER

BRIDGE NO. 55-0469
POST MILE 19.87

RETAINING WALL No. 652
TIEBACK WALL DETAIL

DESIGN DETAIL SHEET (ENGLISH) (REV. 2/25/05)

ORIGINAL SCALE IN INCHES FOR REDUCED PLANS 0 1 2 3

CU 12220
EA 0F0321

DISREGARD PRINTS BEARING EARLIER REVISION DATES

REVISION DATES (PRELIMINARY STAGE ONLY) 02/18/09 03/17/09 06/08/09

SHEET 7 OF 12

FILE => 55-0469-g-rw_det1.dgn

USERNAME => s135318 DATE PLOTTED => 25-JAN-2010 TIME PLOTTED => 15:23

DIST	COUNTY	ROUTE	POST MILES TOTAL PROJECT	SHEET No	TOTAL SHEETS
12	Ora	57	18.4/20.9	795	856

REGISTERED CIVIL ENGINEER 06/08/09 DATE

1-25-10
PLANS APPROVAL DATE

REGISTERED PROFESSIONAL ENGINEER XIAOYUN WU No. 051245 Exp. 09-30-09 CIVIL STATE OF CALIFORNIA

The State of California or its officers or agents shall not be responsible for the accuracy or completeness of electronic copies of this plan sheet.

OCTA
550 S. MAIN STREET
ORANGE, CA 92863

IDC CONSULTING ENGINEERS, INC.
203 WEST CERRITOS AVENUE
ANAHEIM, CA 92805

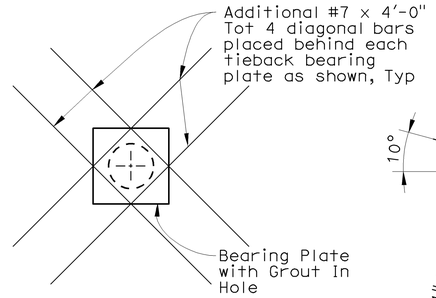

BEARING PLATE DETAIL
No Scale

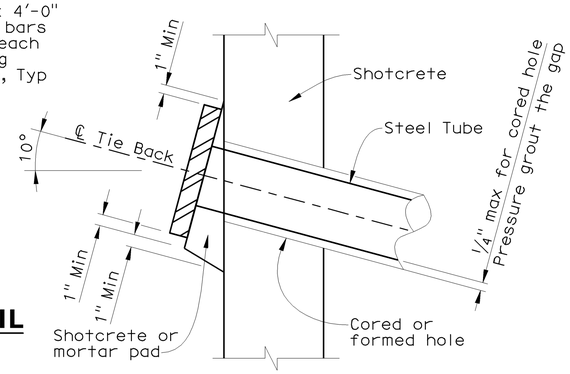

MORTAR PAD DETAIL
No Scale

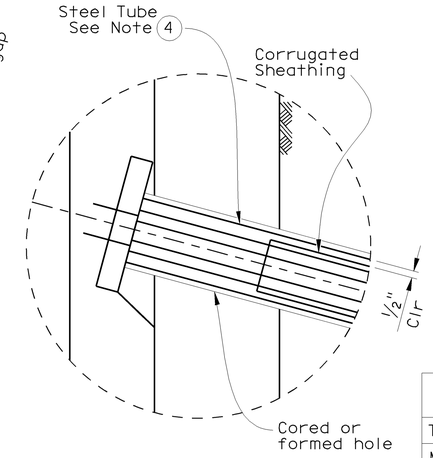

DETAIL A
No Scale

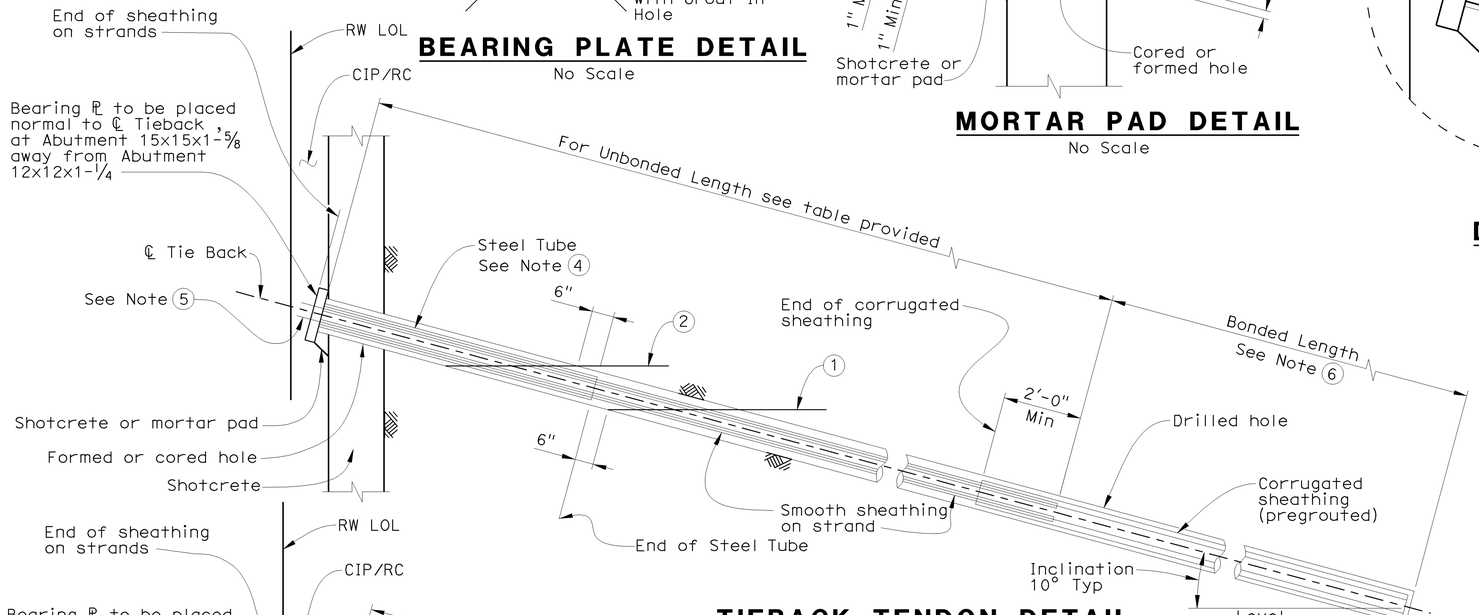

TIEBACK TENDON DETAIL STRAND - ALTERNATIVE A
No Scale

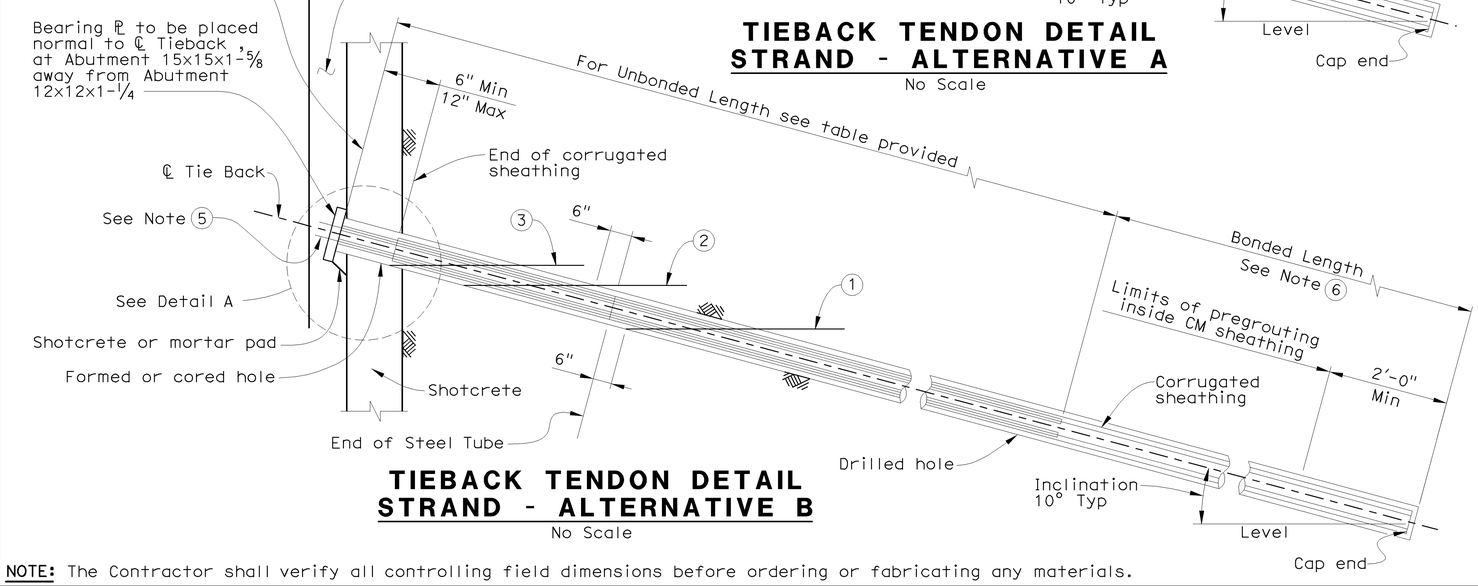

TIEBACK TENDON DETAIL STRAND - ALTERNATIVE B
No Scale

NOTE: The Contractor shall verify all controlling field dimensions before ordering or fabricating any materials.

Tieback Anchor Min Unbonded Length (ft)

Location	4-Row Tieback	3-Row Tieback	2-Row Tieback	Single Row Tieback
Top Row (1)	50	50	35	-
Middle Row (2)	40	45	-	-
Middle Row (3)	35	-	-	-
Bottom Row (4)	20	35	25	15

TIEBACK DESIGN FORCE, T (kip)

Location	Wall at Abutment	4-Row Tieback	3-Row Tieback	2-Row Tieback	Single Row Tieback
Top Row	120	50	60	50	-
Middle Row(s)	80	60	55	-	-
Bottom Row	80	45	50	40	30

NOTE: Middle row includes middle tow rows for 4-row tieback wall segment

LEGEND

1. Level of initial grouting in drilled hole
2. Level of secondary grouting in drilled hole
3. Level of grouting inside of corrugated sheathing
4. Steel tube welded to bearing plate (Min length=3'-6", Min thickness= 3/16") Galvanize assembly after fabrication
5. 2" minimum concrete cover over tieback anchorage
6. The bonded length shall be determined by the Contractor

GENERAL NOTES

Design Criteria:	Service Load Design: Caltrans Bridge Design Specification April 2000 (1996 16th Edition AASHTO with Interims & Revisions by Caltrans)
Loading:	Level Ground with Surcharge (0.3 ksf); Bridge Abutment Surcharge (4.0 ksf)
Design Soil Parameters:	Effective Friction Angle, ϕ=30 ; γ=130 lb/ft^3 Effective Cohesion, c=0.0
Reinforcement:	fy=60 ksi
Concrete:	f'c=3600 psi
Shotcrete:	f'c=3600 psi , f'ci=3250 psi
Prestressing:	Strand Tendon - ASTM A416 fpu=270 ksi (Low Relaxation Strand) T=Design Force per Tieback (kip), see tables As(min)=Minimum Cross Sectional Area of Prestressing Steel in Tieback Tendon (in) As(min)=1.5T / (0.75 fpu)
Anchor Plate:	ASTM A36 , fy=36 ksi

DESIGN OVERSIGHT Jon Hamaguchi
6-9-09
SIGN OFF DATE

	BY	CHECKED
DESIGN	X. Wu	D. Sun
DETAILS	X. Wu	D. Sun
QUANTITIES	P. Kaviani	B. Ho

PREPARED FOR THE STATE OF CALIFORNIA DEPARTMENT OF TRANSPORTATION

Xiaoyun Wu
PROJECT ENGINEER

BRIDGE NO. 55-0469
POST MILE 19.87

RETAINING WALL No. 652
TIEBACK DETAILS

DESIGN DETAIL SHEET (ENGLISH) (REV. 2/25/05)

ORIGINAL SCALE IN INCHES FOR REDUCED PLANS 0 1 2 3

CU 12220
EA 0F0321

DISREGARD PRINTS BEARING EARLIER REVISION DATES

REVISION DATES (PRELIMINARY STAGE ONLY) 02/14/09 04/17/09 06/08/09

SHEET 8 OF 12

FILE => 55-0469-g-rw_det2.dgn

USERNAME => s135318 DATE PLOTTED => 25-JAN-2010 TIME PLOTTED => 15:23

DIST	COUNTY	ROUTE	POST MILES TOTAL PROJECT	SHEET No	TOTAL SHEETS
12	Ora	57	18.4/20.9	796	856

REGISTERED CIVIL ENGINEER — DATE 06/08/09

1-25-10
PLANS APPROVAL DATE

REGISTERED PROFESSIONAL ENGINEER — XIAOYUN WU — No. 051245 — Exp. 09-30-09 — CIVIL — STATE OF CALIFORNIA

The State of California or its officers or agents shall not be responsible for the accuracy or completeness of electronic copies of this plan sheet.

OCTA
550 S. MAIN STREET
ORANGE, CA 92863

IDC CONSULTING ENGINEERS, INC.
203 WEST CERRITOS AVENUE
ANAHEIM, CA 92805

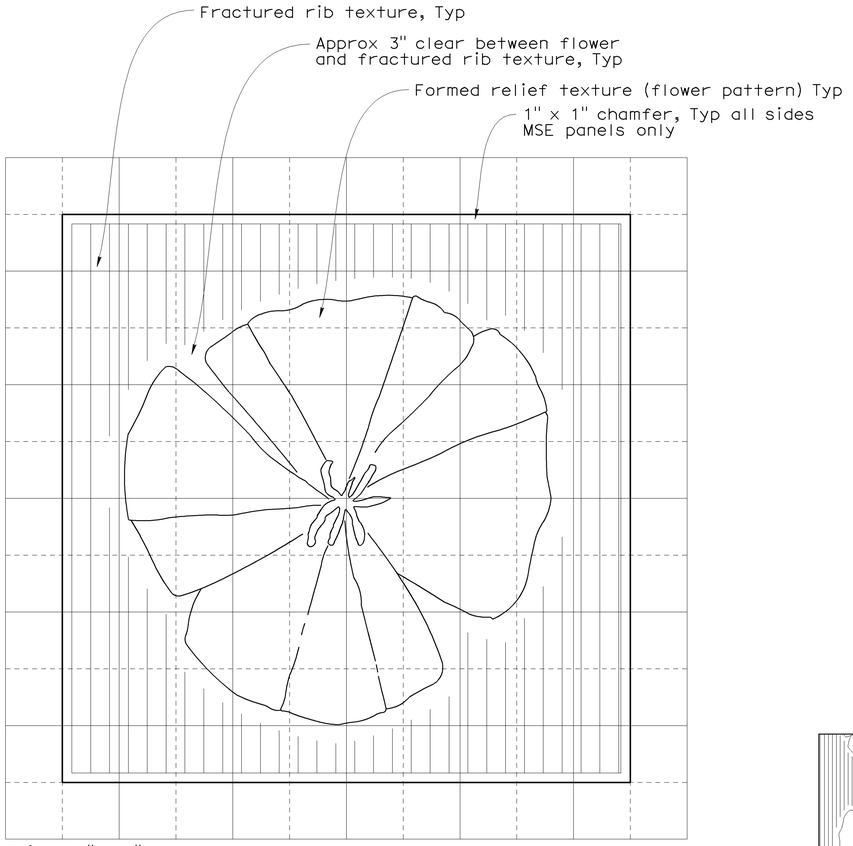

ARCHITECTURAL SURFACE (TEXTURED CONCRETE) FOR MSE PANEL

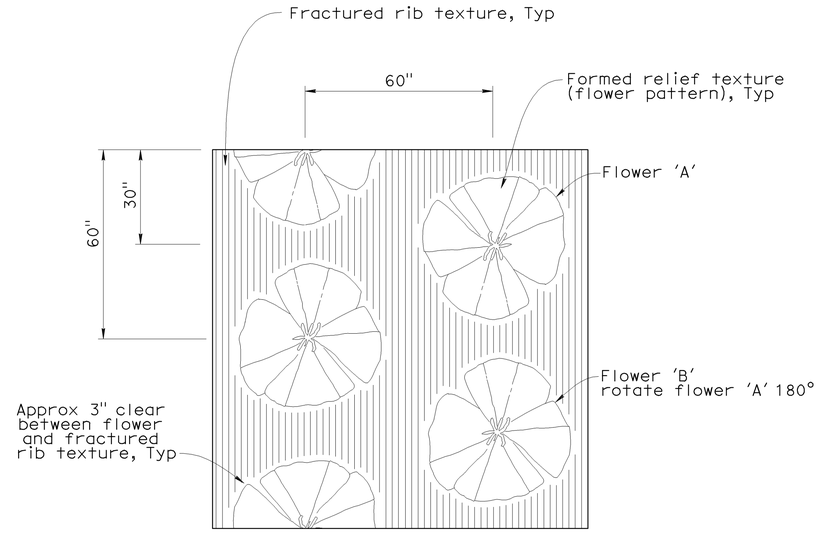

ARCHITECTURAL SURFACE (TEXTURED CONCRETE) PATTERN

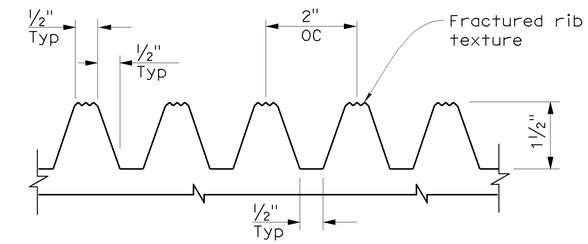

FRACTURED RIB TEXTURE DETAIL

(Elastomer Formliner)

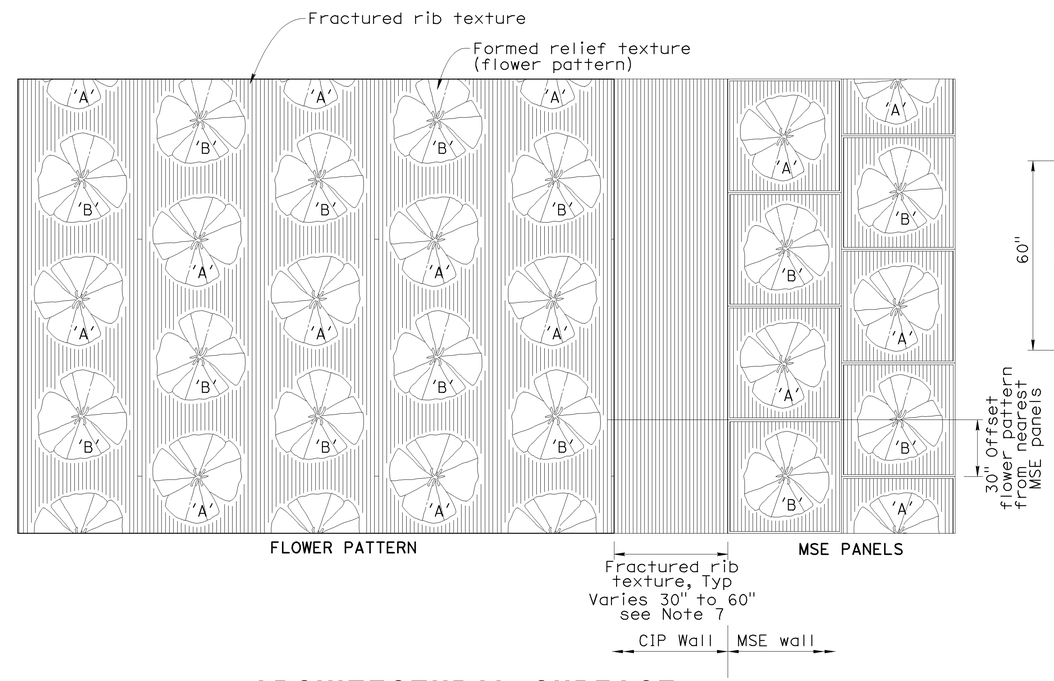

ARCHITECTURAL SURFACE (TEXTURED CONCRETE) ELEVATION

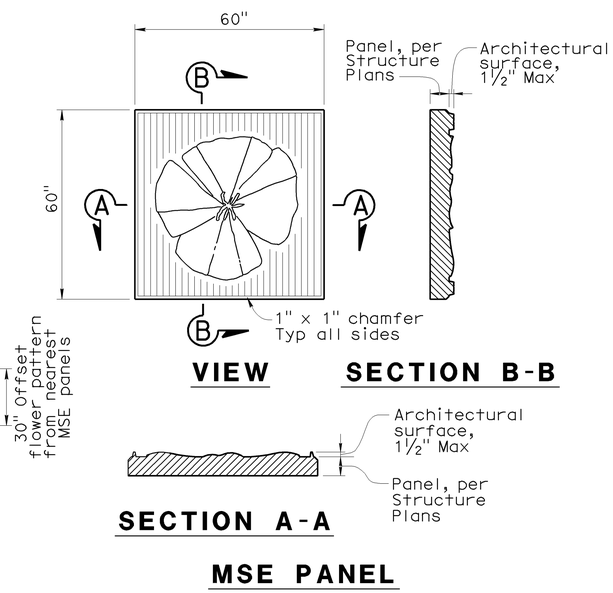

NOTES:

1. Identical flower images, scale and spacing shall be used for flower pattern and MSE wall panels.
2. Within a vertical column, flower images shall alternate between flowers 'A' and 'B'. Vertical columns shall be offset 30" from adjacent columns.
3. Where placed on walls bounded by concrete barriers, finished grade or top of wall, flower pattern shall be continued without concern for partial flower images, except as noted.
4. Refer to structural details for width of smooth band to be applied at edges of structures.
5. Where the flower pattern will be used adjacent to a horizontal limit such as a bridge abutment, adjoining MSE wall or overhead sign structure support, flower pattern shall be discontinued from a section not less than 30" and not greater than 60" wide from the horizontal limit to avoid truncation of flower images. Fractured rib texture shall be inserted in the resulting gap to create a continuous buffer between pattern areas.
6. The nearest column of flower images (flower pattern) shall be offset vertically 30" from the panels.
7. Vary fractured rib texture width (30" to 60") to provide complete flower pattern on cip wall side.

NOTE: The Contractor shall verify all controlling field dimensions before ordering or fabricating any materials.

No scale

DESIGN OVERSIGHT — Jon Hamaguchi
6-9-09
SIGN OFF DATE

	BY	CHECKED
DESIGN	X. Wu	D. Sun
DETAILS	X. Wu	D. Sun
QUANTITIES	P. Kaviani	B. Ho

PREPARED FOR THE STATE OF CALIFORNIA DEPARTMENT OF TRANSPORTATION

Xiaoyun Wu
PROJECT ENGINEER

BRIDGE NO. 55-0469
POST MILE 19.87

RETAINING WALL No. 652
ARCHITECTURAL TREATMENT DETAILS

DESIGN DETAIL SHEET (ENGLISH) (REV. 2/25/05)

ORIGINAL SCALE IN INCHES FOR REDUCED PLANS 0 1 2 3

CU 12220
EA 0F0321

DISREGARD PRINTS BEARING EARLIER REVISION DATES — REVISION DATES (PRELIMINARY STAGE ONLY) 06/08/09

SHEET 9 OF 12

FILE => 55-0469-t-arcdt01.dgn

USERNAME => s135318 DATE PLOTTED => 25-JAN-2010 TIME PLOTTED => 15:23

DIST	COUNTY	ROUTE	POST MILES TOTAL PROJECT	SHEET No	TOTAL SHEETS
12	Ora	57	18.4/20.9	797	856

GEOTECHNICAL PROFESSIONAL — DATE 06/08/09

1-25-10
PLANS APPROVAL DATE

The State of California or its officers or agents shall not be responsible for the accuracy or completeness of electronic copies of this plan sheet.

REGISTERED PROFESSIONAL ENGINEER — HISHAM M. NOFAL No. 2765 Exp. 09/30/09 GEOTECHNICAL — STATE OF CALIFORNIA

OCTA
550 S. MAIN STREET
ORANGE, CA 92863

CH2M HILL
6 HUTTON CENTRE DRIVE, SUITE 700
SANTA ANA, CA 92707

BENCHMARK:

Horizontal coordinates are CCS NAD-83, Zone 6.
Vertical control based on North American Vertical Datum 1988.
Pt 1068: N2277999.248, E6066394.642, Elev 310.252
Pt 1069: N2278210.836, E6066285.157, Elev 305.442

SAMPLER TYPES:

California modified ring sampler
standard penetration test sampler

HAMMER TYPE:

Automatic hammer

CORRECTION FACTOR:

To convert from California modified ring sampler blow count to equivalent standard penetration test sampler blow count, for granular and cohesive soil, multiply by 0.67.

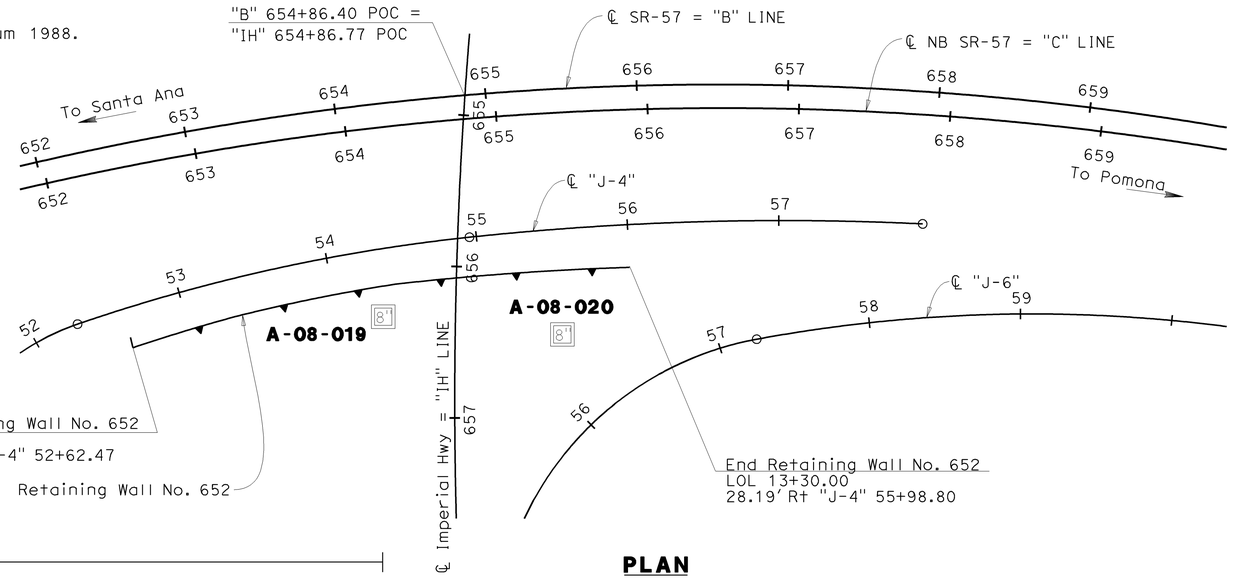

PLAN
1"=50'

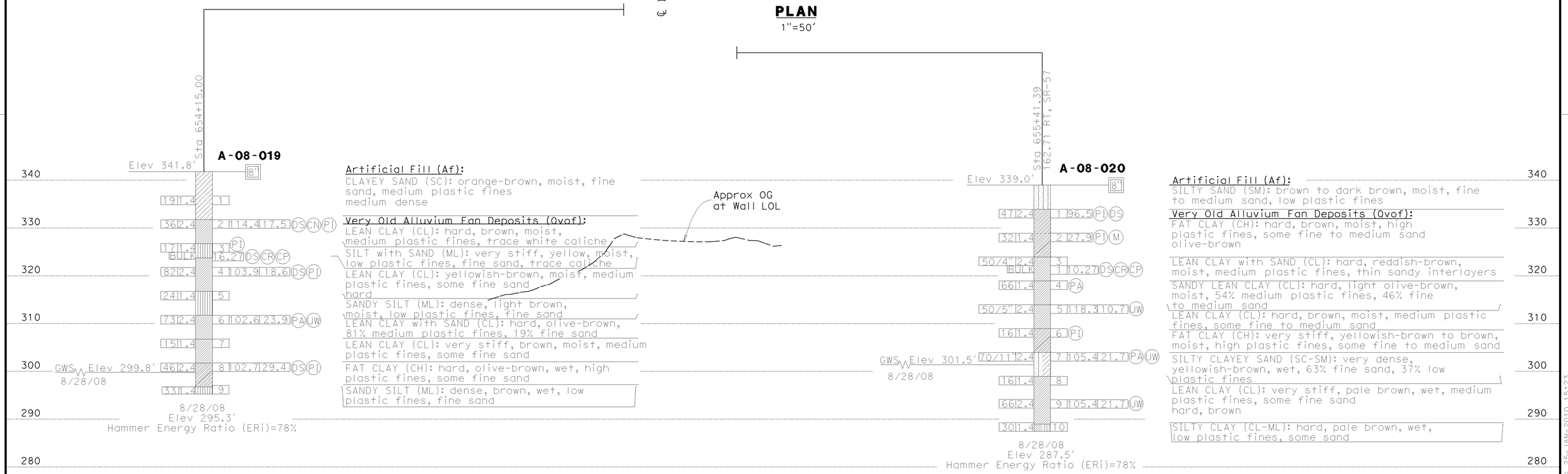

PROFILE
Horz:1"=50'
Vert: 1"=10'

STATIONING "SR-57" = "B" Line

648 649 650 651 652 653 654 655 656 657 658 659 660 661 662 663 664

DESIGN OVERSIGHT Jon Hamaguchi — 6-9-09 SIGN OFF DATE	DRAWN BY K. Reyes	R. Bethapudi FIELD INVESTIGATION BY:	PREPARED FOR THE STATE OF CALIFORNIA DEPARTMENT OF TRANSPORTATION	Ayman Salama PROJECT ENGINEER	BRIDGE NO. 55-0469 / POST MILES 19.87
	CHECKED BY H. Nofal	DATE			**RETAINING WALL NO. 652** / **LOG OF TEST BORINGS SHEET 1 OF 3**

ORIGINAL SCALE IN INCHES FOR REDUCED PLANS 0 1 2 3

CU 12220
EA 0F0321

DISREGARD PRINTS BEARING EARLIER REVISION DATES — REVISION DATES (PRELIMINARY STAGE ONLY) 02/18/09 04/07/09 06/08/09

SHEET 10 OF 12

USERNAME => s135318
DGN FILE => 55-0469-z-ltb01.dgn

TIME PLOTTED => 25-JAN-2010 15:23

DIST	COUNTY	ROUTE	POST MILES TOTAL PROJECT	SHEET No	TOTAL SHEETS
12	Ora	57	18.4/20.9	798	856

GEOTECHNICAL PROFESSIONAL — DATE 06/08/09

1-25-10
PLANS APPROVAL DATE

The State of California or its officers or agents shall not be responsible for the accuracy or completeness of electronic copies of this plan sheet.

REGISTERED PROFESSIONAL ENGINEER — HISHAM M. NOFAL No. 2765 Exp. 09/30/09 GEOTECHNICAL — STATE OF CALIFORNIA

OCTA
550 S. MAIN STREET
ORANGE, CA 92863

CH2M HILL
6 HUTTON CENTRE DRIVE, SUITE 700
SANTA ANA, CA 92707

REFERENCE: CALTRANS SOIL & ROCK LOGGING, CLASSIFICATION, AND PRESENTATION MANUAL (JUNE 2007)

GROUP SYMBOLS AND NAMES

Graphic/Symbol	Group Names
GW	Well-graded GRAVEL Well-graded GRAVEL with SAND
GP	Poorly graded GRAVEL Poorly graded GRAVEL with SAND
GW-GM	Well-graded GRAVEL with SILT Well-graded GRAVEL with SILT and SAND
GW-GC	Well-graded GRAVEL with CLAY (or SILTY CLAY) Well-graded GRAVEL with CLAY and SAND (or SILTY CLAY and SAND)
GP-GM	Poorly graded GRAVEL with SILT Poorly graded GRAVEL with SILT and SAND
GP-GC	Poorly graded GRAVEL with CLAY (or SILTY CLAY) Poorly graded GRAVEL with CLAY and SAND (or SILTY CLAY and SAND)
GM	SILTY GRAVEL SILTY GRAVEL with SAND
GC	CLAYEY GRAVEL CLAYEY GRAVEL with SAND
GC-GM	SILTY, CLAYEY GRAVEL SILTY, CLAYEY GRAVEL with SAND
SW	Well-graded SAND Well-graded SAND with GRAVEL
SP	Poorly graded SAND Poorly graded SAND with GRAVEL
SW-SM	Well-graded SAND with SILT Well-graded SAND with SILT and GRAVEL
SW-SC	Well-graded SAND with CLAY (or SILTY CLAY) Well-graded SAND with CLAY and GRAVEL (or SILTY CLAY and GRAVEL)
SP-SM	Poorly graded SAND with SILT Poorly graded SAND with SILT and GRAVEL
SP-SC	Poorly graded SAND with CLAY (or SILTY CLAY) Poorly graded SAND with CLAY and GRAVEL (or SILTY CLAY and GRAVEL)
SM	SILTY SAND SILTY SAND with GRAVEL
SC	CLAYEY SAND CLAYEY SAND with GRAVEL
SC-SM	SILTY, CLAYEY SAND SILTY, CLAYEY SAND with GRAVEL
PT	PEAT
	COBBLES COBBLES and BOULDERS BOULDERS

Graphic/Symbol	Group Names
CL	Lean CLAY Lean CLAY with SAND Lean CLAY with GRAVEL SANDY lean CLAY SANDY lean CLAY with GRAVEL GRAVELLY lean CLAY GRAVELLY lean CLAY with SAND
CL-ML	SILTY CLAY SILTY CLAY with SAND SILTY CLAY with GRAVEL SANDY SILTY CLAY SANDY SILTY CLAY with GRAVEL GRAVELLY SILTY CLAY GRAVELLY SILTY CLAY with SAND
ML	SILT SILT with SAND SILT with GRAVEL SANDY SILT SANDY SILT with GRAVEL GRAVELLY SILT GRAVELLY SILT with SAND
OL	ORGANIC lean CLAY ORGANIC lean CLAY with SAND ORGANIC lean CLAY with GRAVEL SANDY ORGANIC lean CLAY SANDY ORGANIC lean CLAY with GRAVEL GRAVELLY ORGANIC lean CLAY GRAVELLY ORGANIC lean CLAY with SAND
OL	ORGANIC SILT ORGANIC SILT with SAND ORGANIC SILT with GRAVEL SANDY ORGANIC SILT SANDY ORGANIC SILT with GRAVEL GRAVELLY ORGANIC SILT GRAVELLY ORGANIC SILT with SAND
CH	Fat CLAY Fat CLAY with SAND Fat CLAY with GRAVEL SANDY fat CLAY SANDY fat CLAY with GRAVEL GRAVELLY fat CLAY GRAVELLY fat CLAY with SAND
MH	Elastic SILT Elastic SILT with SAND Elastic SILT with GRAVEL SANDY elastic SILT SANDY elastic SILT with GRAVEL GRAVELLY elastic SILT GRAVELLY elastic SILT with SAND
OH	ORGANIC fat CLAY ORGANIC fat CLAY with SAND ORGANIC fat CLAY with GRAVEL SANDY ORGANIC fat CLAY SANDY ORGANIC fat CLAY with GRAVEL GRAVELLY ORGANIC fat CLAY GRAVELLY ORGANIC fat CLAY with SAND
OH	ORGANIC elastic SILT ORGANIC elastic SILT with SAND ORGANIC elastic SILT with GRAVEL SANDY ORGANIC elastic SILT SANDY ORGANIC elastic SILT with GRAVEL GRAVELLY ORGANIC elastic SILT GRAVELLY ORGANIC elastic SILT with SAND
OL/OH	ORGANIC SOIL ORGANIC SOIL with SAND ORGANIC SOIL with GRAVEL SANDY ORGANIC SOIL SANDY ORGANIC SOIL with GRAVEL GRAVELLY ORGANIC SOIL GRAVELLY ORGANIC SOIL with SAND

FIELD AND LABORATORY TESTING

- (C) Consolidation (ASTM D 2435)
- (CL) Collapse Potential (ASTM D 5333)
- (CP) Compaction Curve (CTM 216)
- (CR) Corrosivity Testing (CTM 643, CTM 422, CTM 417)
- (CU) Consolidated Undrained Triaxial (ASTM D 4767)
- (DS) Direct Shear (ASTM D 3080)
- (EI) Expansion Index (ASTM D 4829)
- (M) Moisture Content (ASTM D 2216)
- (OC) Organic Content-% (ASTM D 2974)
- (P) Permeability (CTM 220)
- (PA) Particle Size Analysis (ASTM D 422)
- (PI) Plasticity Index (AASHTO T 90) Liquid Limit (AASHTO T 89)
- (PL) Point Load Index (ASTM D 5731)
- (PM) Pressure Meter
- (PP) Pocket Penetrometer
- (R) R-Value (CTM 301)
- (SE) Sand Equivalent (CTM 217)
- (SG) Specific Gravity (AASHTO T 100)
- (SL) Shrinkage Limit (ASTM D 427)
- (SW) Swell Potential (ASTM D 4546)
- (TV) Pocket Torvane
- (UC) Unconfined Compression-Soil (ASTM D 2166) Unconfined Compression-Rock (ASTM D 2938)
- (UU) Unconsolidated Undrained Triaxial (ASTM D 2850)
- (UW) Unit Weight (ASTM D 4767)
- (VS) Vane Shear (AASHTO T 223)

APPARENT DENSITY OF COHESIONLESS SOILS

Description	SPT N_{60} (Blows / 12 inches)
Very loose	0 - 4
Loose	5 - 10
Medium Dense	11 - 30
Dense	31 - 50
Very Dense	> 50

MOISTURE

Description	Criteria
Dry	Absence of moisture, dusty, dry to the touch
Moist	Damp but no visible water
Wet	Visible free water, usually soil is below water table

PERCENT OR PROPORTION OF SOILS

Description	Criteria
Trace	Particles are present but estimated to be less than 5%
Few	5 to 10%
Little	15 to 25%
Some	30 to 45%
Mostly	50 to 100%

PARTICLE SIZE

Description		Size
Boulder		> 12"
Cobble		3" to 12"
Gravel	Coarse	3/4" to 3"
	Fine	No. 4 to 3/4"
Sand	Coarse	No. 10 to No. 4
	Medium	No. 40 to No. 10
	Fine	No. 200 to No. 40

CEMENTATION

Description	Criteria
Weak	Crumbles or breaks with handling or little finger pressure.
Moderate	Crumbles or breaks with considerable finger pressure.
Strong	Will not crumble or break with finger pressure.

CONSISTENCY OF COHESIVE SOILS

Description	Unconfined Compressive Strength (tsf)	Pocket Penetrometer Measurement (tsf)	Torvane Measurement (tsf)	Field Approximation
Very Soft	< 0.25	< 0.25	< 0.12	Easily penetrated several inches by fist
Soft	0.25 to 0.50	0.25 to 0.50	0.12 to 0.25	Easily penetrated several inches by thumb
Medium Stiff	0.50 to 1.0	0.50 to 1.0	0.25 to 0.50	Penetrated several inches by thumb with moderate effort
Stiff	1 to 2	1 to 2	0.50 to 1.0	Readily indented by thumb but penetrated only with great effort
Very Stiff	2 to 4	2 to 4	1.0 to 2.0	Readily indented by thumbnail
Hard	> 4.0	> 4.0	> 2.0	Indented by thumbnail with difficulty

PLASTICITY OF FINE-GRAINED SOILS

Description	Criteria
Nonplastic	A 1/8-inch thread cannot be rolled at any water content.
Low	The thread can barely be rolled and the lump cannot be formed when drier than the plastic limit.
Medium	The thread is easy to roll and not much time is required to reach the plastic limit. The thread cannot be rerolled after reaching the plastic limit. The lump crumbles when drier than the plastic limit.
High	It takes considerable time rolling and kneading to reach the plastic limit. The thread can be rerolled several times after reaching the plastic limit. The lump can be formed without crumbling when drier than the plastic limit.

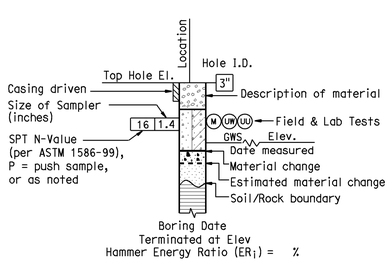

ROTARY BORING

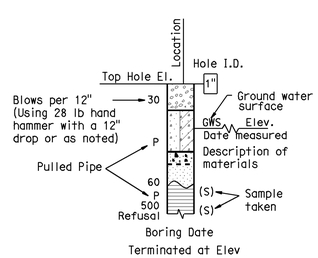

HAND BORING

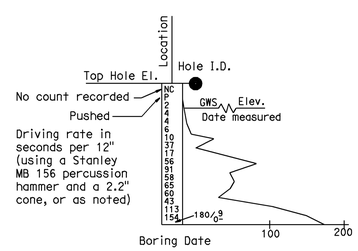

DYNAMIC CONE PENETRATION BORING

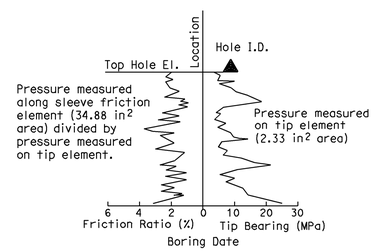

CONE PENETRATION TEST (CPT) SOUNDING

BOREHOLE IDENTIFICATION

Symbol	Hole Type	Description
Size	A	Auger Boring
Size	R P	Rotary drilled boring Rotary percussion boring (air)
Size	R	Rotary drilled diamond core
Size	HD HA	Hand driven (1-inch soil tube) Hand Auger
●	D	Dynamic Cone Penetration Boring
◕	B	Hollow Stem Auger Boring (HSA)
▲	CPT	Cone Penetration Test (ASTM D 5778-95)
⬚	O	Other

Note: Size in inches.

RETAINING WALL NO. 652

SOIL LEGEND

LOG OF TEST BORINGS SHEET 2 OF 3

DESIGN OVERSIGHT — Jon Hamaguchi
6-9-09
SIGN OFF DATE

DRAWN BY K. Reyes
CHECKED BY H. Nofal

R. Bethapudi
FIELD INVESTIGATION BY:
DATE

PREPARED FOR THE STATE OF CALIFORNIA DEPARTMENT OF TRANSPORTATION

Ayman Salama
PROJECT ENGINEER

BRIDGE NO. 55-0469
POST MILES 19.87

ORIGINAL SCALE IN INCHES FOR REDUCED PLANS 0 1 2 3

CU 12220
EA 0F0321

DISREGARD PRINTS BEARING EARLIER REVISION DATES
REVISION DATES (PRELIMINARY STAGE ONLY) 02/18/09 04/07/09 06/08/09

SHEET 11 OF 12

TIME PLOTTED => 25-JAN-2010 15:23

USERNAME => s135318
DGN FILE => 55-0469-z-ltb02.dgn

FED. ROAD DIV. No.	STATE	F.A. PROJECT No.	SHEET No.	TOTAL SHEETS
7	CALIF.			

DIST.	COUNTY	ROUTE	SECTION	SHEET No.	TOTAL SHEETS
07	ORA	57	7.0/20.7	180	180

Date Approved September 30, 1968

BENCH MARK

BM 41-194-56 Elev. 312.57
Fd. Ora. Co. R/W mon. in conc. in 2" I.P. stamped "R.E. 7188"; 10' E. of "P" line; 31' So. of 46' W. of ints. of Imperial Hwy. & Associated Rd.; 16' E. of PP# 961693 E

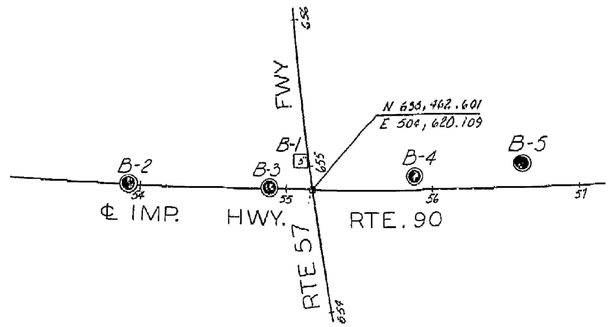

DIVISION OF ENGINEERING SERVICES - GEOTECHNICAL SERVICES					
As-Built Log of Test Borings sheet is considered an informational document only. As such, the State of California registration seal with signature, license number and registration certificate expiration date confirm that this is a true and accurate copy of the original document. This drawing is available and presented only for the convenience of any bidder, contractor or other interested party.					
DIST.	COUNTY	ROUTE	KILOMETER POST-TOTAL PROJECT	Sheet No.	Total Sheets
12	Ora	57	18.4/20.9	799	856
Hisham M. Nofal — REGISTERED CIVIL ENGINEER			06/08/09 — DATE		
RETAINING WALL NO. 652					
LOG OF TEST BORINGS SHEET 3 OF 3					
NOTE: A COPY OF THIS LOG OF TEST BORINGS IS AVAILABLE AT OFFICE OF STRUCTURE MAINTENANCE AND INVESTIGATIONS, SACRAMENTO, CALIFORNIA			CU#-12220 EA# 0F0231	BRIDGE No. 55-0469	
				Sheet 12	of 12

To accompany plans dated 1-25-10

REGISTERED PROFESSIONAL ENGINEER
HISHAM M. NOFAL
No. 2765
Exp. 09/30/09
GEOTECHNICAL
STATE OF CALIFORNIA

AS BUILT PLANS
Contract No. 07-032134
Date Completed
Document No. 70001578

PLAN

Scale 1"=50'

INFORMATION ON ACTUAL FOUNDATION CONDITIONS ENCOUNTERED IS ON FILE IN BRIDGE GEOLOGY SECTION

NO GROUND WATER ENCOUNTERED DURING THIS INVESTIGATION BY BRIDGE DEPT. GEOLOGY SECTION
DATE June 1966

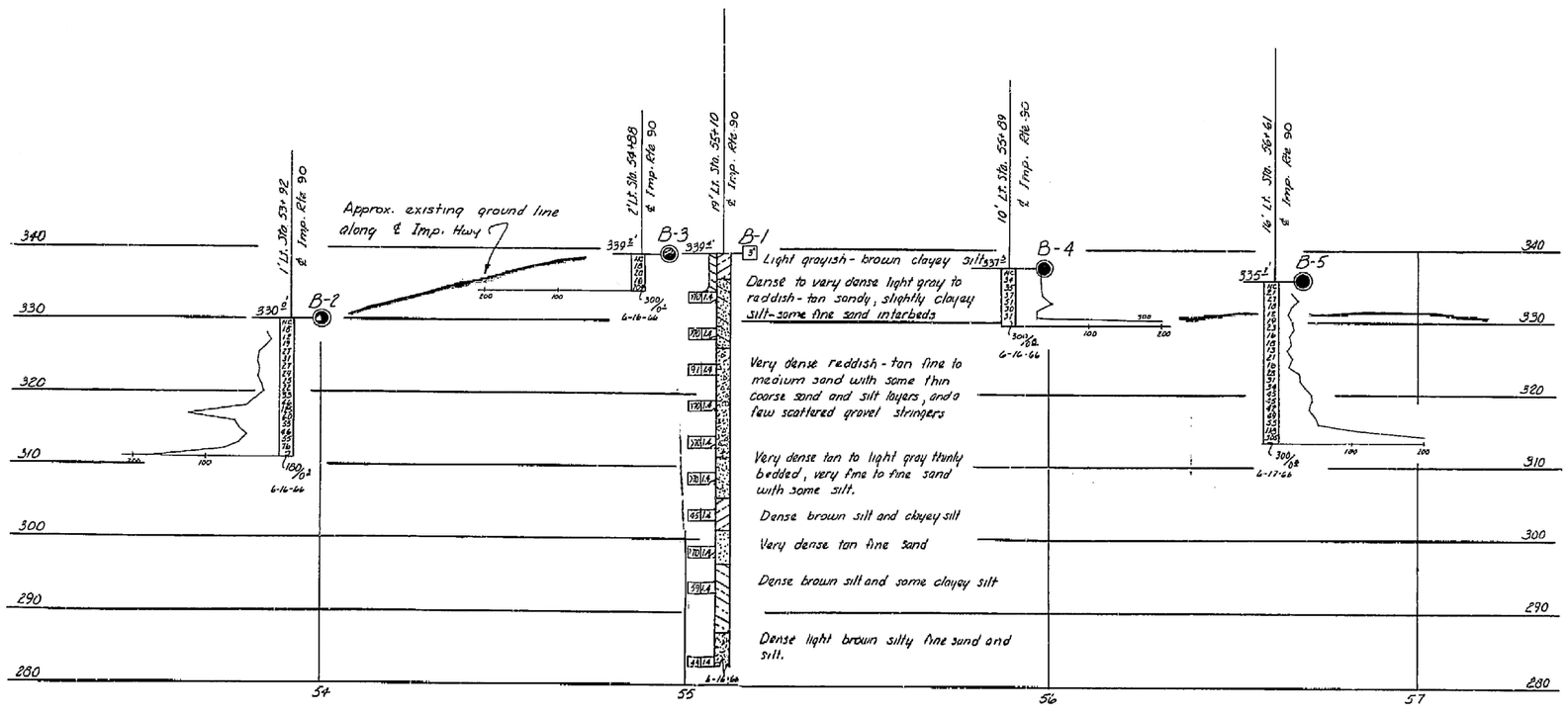

PROFILE

Scale Vert. 1"=10'
Horiz. 1"=20'

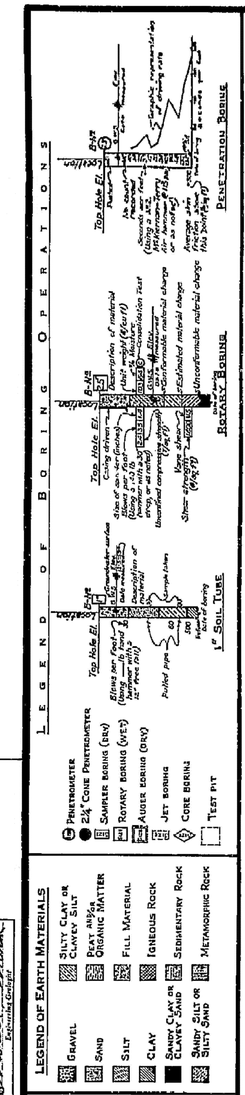

NOTE: Classification of earth material as shown on this sheet is based upon field inspection and is not to be construed to imply mechanical analysis.

FIELD STUDY	By: D. CRAWFORD	6-17-66
DRAWN	By: M. ALLRED	6-28-66
CHECKED	By: G. MINES	6-28-66

Approval Recommended: Charles S. Mines, Engineering Geologist

BRIDGE DEPARTMENT
ENGINEERING GEOLOGY SECTION

SHEET	OF
9	9

STATE OF CALIFORNIA
DEPARTMENT OF PUBLIC WORKS
DIVISION OF HIGHWAYS

ROUTE 90/57 SEPARATION

LOG OF TEST BORINGS

SCALE As Noted	BRIDGE 55-469	FILE	DRAWING 55469-9

PREL. DRAWING No. PR-

FILENAME => 55-0469-z-1tb03.tif

Change 07208
W.A. 032131

Disregard prints bearing earlier numbers

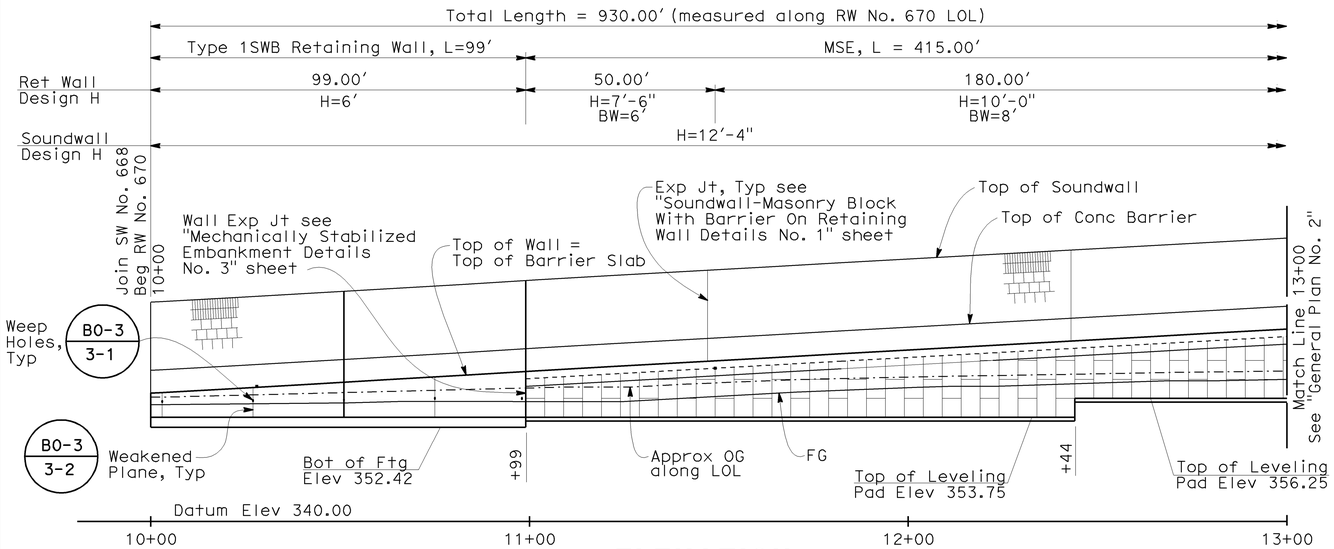

ELEVATION

Horiz 1"=20'
Vert 1"=10'

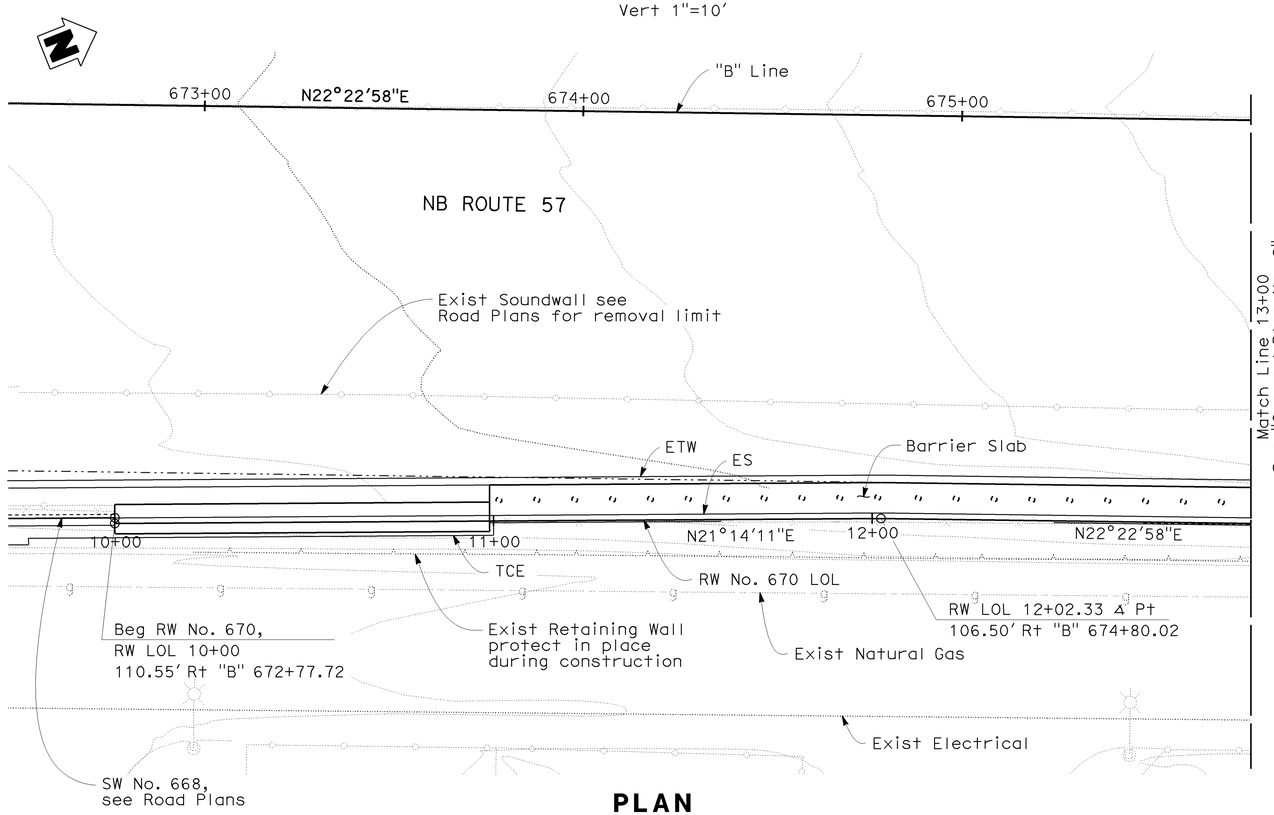

PLAN

1"=20'

INDEX TO PLANS

SHEET NO.	TITLE
1.	GENERAL PLAN NO. 1
2.	GENERAL PLAN NO. 2
3.	GENERAL PLAN NO. 3
4.	TYPICAL SECTIONS
5.	RETAINING WALL TYPE 1SWB
6.	RETAINING WALL DETAILS No. 1
7.	RETAINING WALL DETAILS No. 2
8.	MECHANICALLY STABILIZED EMBANKMENT DETAIL NO. 1
9.	MECHANICALLY STABILIZED EMBANKMENT DETAIL NO. 2
10.	MECHANICALLY STABILIZED EMBANKMENT DETAIL NO. 3
11.	MECHANICALLY STABILIZED EMBANKMENT DETAIL NO. 5
12.	MECHANICALLY STABILIZED EMBANKMENT DETAIL NO. 6
13.	OVERHEAD SIGN PEDESTAL DETAILS
14.	SOUNDWALL - MASONRY BLOCK WITH BARRIER ON RETAINING WALL DETAILS NO. 1
15.	SOUNDWALL - MASONRY BLOCK WITH BARRIER ON RETAINING WALL DETAILS NO. 2
16.	SOUNDWALL MASONRY BLOCK MISCELLANEOUS DETAILS
17.	ARCHITECTURAL TREATMENT DETAILS
18.	LOG OF TEST BORINGS SHEET 1 OF 4
19.	LOG OF TEST BORINGS SHEET 2 OF 4
20.	LOG OF TEST BORINGS SHEET 3 OF 4
21.	LOG OF TEST BORINGS SHEET 4 OF 4

STANDARD PLANS DATED MAY 2006

A10A	ACRONYMS AND ABBREVIATIONS (SHEET 1 OF 2)
A10B	ACRONYMS AND ABBREVIATIONS (SHEET 2 OF 2)
A10C	SYMBOLS (SHEET 1 OF 2)
A10D	SYMBOLS (SHEET 2 OF 2)
B0-3	BRIDGE DETAILS
B2-3	16" AND 24" CAST-IN-DRILLED-HOLE CONCRETE PILE
B3-8	RETAINING WALL DETAILS NO. 1
B11-56	CONCRETE BARRIER TYPE 736
S2	OVERHEAD SIGNS - TRUSS, SINGLE POST TYPE - POST TYPES II THRU IX
S3	OVERHEAD SIGNS - TRUSS, SINGLE POST TYPE - BASE PLATE AND ANCHORAGE DETAILS

Standard Plan Sheet No.

Detail No.

RETAINING WALL NO 670
QUANTITIES

STRUCTURE EXCAVATION (RETAINING WALL)	260	CY
STRUCTURE EXCAVATION (TYPE Y-1) (AERIALLY DEPOSITED LEAD)	26	CY
STRUCTURE BACKFILL (RETAINING WALL)	250	CY
EARTH RETAINING STRUCTURE (MECHANICALLY STABILIZED EARTH WALL)	10,500	SQFT
16" CAST-IN-DRILLED-HOLE CONCRETE PILING	305	LF
18" CAST-IN-DRILLED-HOLE CONCRETE PILING	1,953	LF
STRUCTURAL CONCRETE, RETAINING WALL	100	CY
STRUCTURAL CONCRETE, BARRIER SLAB	432	CY
FORMED RELIEF TEXTURE (FLOWERED PATTERN)	132	SQFT
FRACTURED RIB TEXTURE	2,200	SQFT
SOUND WALL (BARRIER)(MASONRY BLOCK)	8,040	SQFT
BAR REINFORCING STEEL (RETAINING WALL)	11,080	LB
CONCRETE BARRIER (TYPE 736 MODIFIED)	930	LF

NOTES:

1. Contractor to field verify all utility locations prior to retaining wall construction.
2. For Log of Test Boring information, see Geotechnical Design Report.
3. For Retaining Wall Elevation Table, see "Retaining Wall Details No. 1" sheet.
4. For Typical Sections, see "Typical Sections" sheet.
5. For Pile Data Table, see "Overhead Sign Pedestal Details" sheet

DIST	COUNTY	ROUTE	POST MILES TOTAL PROJECT	SHEET No	TOTAL SHEETS
12	Ora	57	18.4/20.9	800	856

REGISTERED CIVIL ENGINEER — DATE 06/08/09

1-25-10
PLANS APPROVAL DATE

REGISTERED PROFESSIONAL ENGINEER C. DANIEL SUN No. 40064 Exp. 12/31/09 CIVIL STATE OF CALIFORNIA

The State of California or its officers or agents shall not be responsible for the accuracy or completeness of electronic copies of this plan sheet.

OCTA
550 S. MAIN STREET
ORANGE, CA 92863

CH2M HILL
6 HUTTON CENTRE DRIVE, SUITE 700
SANTA ANA, CA 92707

DESIGN OVERSIGHT — Jon Hamaguchi
11-24-09
SIGN OFF DATE

	BY	CHECKED			
DESIGN	D. Sun	J. Powell	LRFD	LIVE LOADING: HL-93 AND PERMIT (P-15) DESIGN LOAD	
DETAILS	D. Sun	J. Powell	LAYOUT	E. Maechler	M. Atiqullah
QUANTITIES	Y. Chiu	L. Ros	SPECIFICATIONS	M. Remolador	PLANS AND SPECS COMPARED M. Atiqullah

DESIGN GENERAL PLAN SHEET (ENGLISH) (REV. 2/25/05)

ORIGINAL SCALE IN INCHES FOR REDUCED PLANS 0 1 2 3

PREPARED FOR THE STATE OF CALIFORNIA DEPARTMENT OF TRANSPORTATION

CU 12220
EA 0F0321

Ayman Salama
PROJECT ENGINEER

BRIDGE NO. 55E0095
POST MILES 20.21

RETAINING WALL NO. 670
GENERAL PLAN NO.1

DISREGARD PRINTS BEARING EARLIER REVISION DATES

REVISION DATES (PRELIMINARY STAGE ONLY) 02/18/09 04/07/09 04/27/09 06/08/09

SHEET 1 OF 21

FILE => 55e0095-a-gp01.dgn

USERNAME => s135318 DATE PLOTTED => 25-JAN-2010 TIME PLOTTED => 15:23