DIST	COUNTY	ROUTE	POST MILES TOTAL PROJECT	SHEET No.	TOTAL SHEETS
12	Ora	5	3.7/6.2	701	780

REGISTERED CIVIL ENGINEER — DATE 4/22/13

8-26-13
PLANS APPROVAL DATE

REGISTERED PROFESSIONAL ENGINEER — Mohan S. Char No. 57894 Exp. 6/30/14 CIVIL — STATE OF CALIFORNIA

The State of California or its officers or agents shall not be responsible for the accuracy or completeness of electronic copies of this plan sheet.

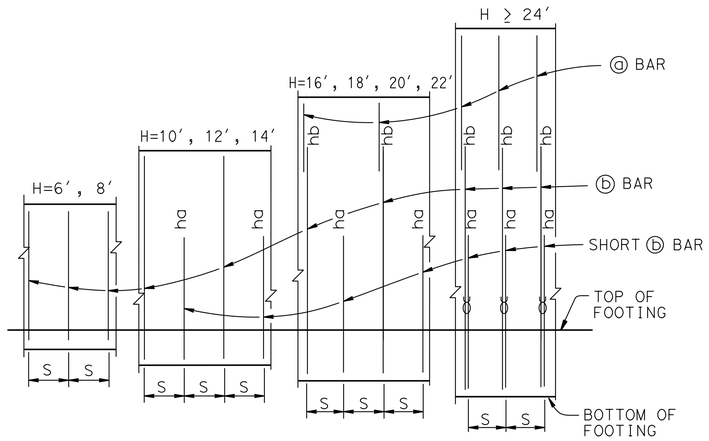

ELEVATION
No Scale

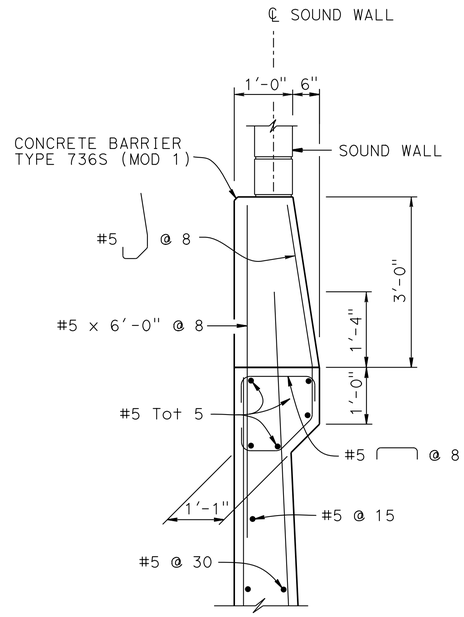

② DETAIL A
¾ = 1′-0″

NOTES:
"ha" and "hb" above ⓑ bars indicate distance from top of footing to upper end of ⓑ bars, see table.
"S" is ⓑ bar spacing, see table.
Ø : 2 bar bundle

DESIGN DATA

Design: AASHTO LRFD Bridge Design Specifications, 4th edition with California Amendments

WS: 33 psf on Sound Wall and Barrier

LS: Varied surcharge on level ground surface

CT: 54 kip maximum traffic impact loading evenly distributed over 10 feet at top of the barrier and 1:1 distribution down and outward

EQE: Mononabe-Okabe Method
K_h = 0.3
K_v = 0.0

Soil: Ø = 34°
γ = 120 pcf

Reinforced Concrete: f′c = 3600 psi
fy = 60,000 psi

Load Combinations and Limit States

Service I	Q=1.00DC+1.00EV+1.00EH+1.00LS+0.30WS
Service II	Q=1.00DC+1.00EV+1.00EH+1.00WS
Strength I	Q=aDC+βEV+1.50EH+1.75LS
Strength III	Q=aDC+βEV+1.50EH+1.40WS
Strength V	Q=aDC+βEV+1.50EH+1.35LS+0.40WS
Extreme I	Q=1.00DC+1.00EV+1.00EH+1.00EQD+1.00EQE
Extreme II	Q=1.00DC+1.00EV+1.00EH+1.00CT

Where:
Q: Force Effects
a: 1.25 or 0.90, Which ever Controls Design
β: 1.35 or 1.00, which ever Controls Design
DC: Dead Load of Structure Components
EV: Vertical Earth Fill Pressure
LS: Live Load Surcharge
EQE: Seismic Earth Pressure
EQD: Soil and Structure Components Inertia. Soil inertia ignored for stem design
WS: Wind Load on Sound Wall and Barrier
CT: Vehicular Collision Force

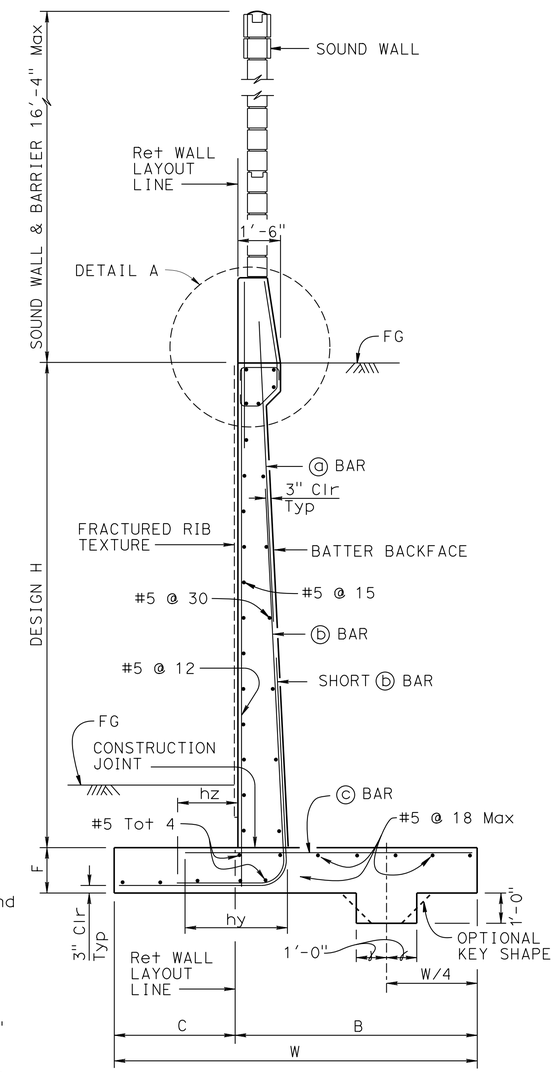

SPREAD FOOTING SECTION ②
No Scale

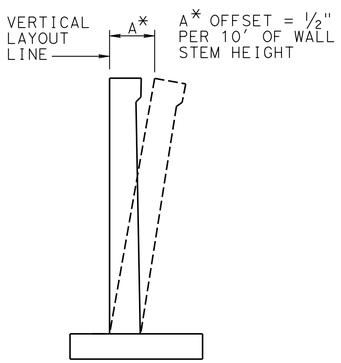

WALL OFFSET
No Scale

Values for offsetting forms to be determined by the Engineer

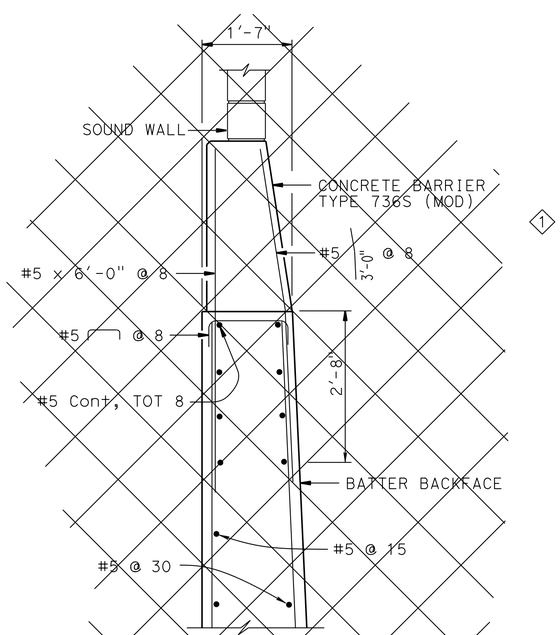

OPTIONAL DETAIL A
¾ = 1′-0″

For Details not shown, see "DETAIL A"

NOTES:
③ 1. For retaining wall fractured rib texture, see "INDEX TO PLANS" sheet and for sound wall aesthetics, see "SOUND WALL DETAILS" sheet.
2. For details not shown and drainage notes see RSP B3-5
3. Footing cover, 1′-6″ minimum.
③ 4. For sound wall and barrier reinforcement details, see "MASONRY BLOCK SOUND WALL WITH BARRIER ON RETAINING WALL-DETAILS NO. 1" sheet.
5. For H = 6′ through 14′, extend ⓑ bars into Barrier for stem with haunch.
6. For H ≥ 16′, extend ⓐ bars into Barrier for stem with haunch.

SPECIAL DETAILS

REVISED STANDARD DRAWING

FILE NO. xs14-220-1 — APPROVAL DATE July 2011

① DOES NOT APPLY ② MODIFIED DETAIL ③ REVISED NOTE

STATE OF CALIFORNIA DEPARTMENT OF TRANSPORTATION — DIVISION OF ENGINEERING SERVICES

BRIDGE NO. 55E0153 — POST MILE 4.99

RETAINING WALL NO. 274R
RETAINING WALL TYPE 1SWB-DETAILS NO. 1

DS OSD 2147A (ENGLISH STANDARD DRAWING "XS" BORDER REV. (02-02-11)

ORIGINAL SCALE IN INCHES FOR REDUCED PLANS 0 1 2 3

UNIT: PROJECT NUMBER & PHASE: 1200020278 — CONTRACT NO.: 12-0F96C1

DISREGARD PRINTS BEARING EARLIER REVISION DATES — REVISION DATES 04-27-12 09-24-12 01-14-13 04-22-13 — SHEET 3 OF 8

FILE => RW274R-g-rwdt01.dgn

USERNAME => s124496 DATE PLOTTED => 29-AUG-2013 TIME PLOTTED => 09:06

DIST	COUNTY	ROUTE	POST MILES TOTAL PROJECT	SHEET No.	TOTAL SHEETS
12	Ora	5	3.7/6.2	702	780

REGISTERED CIVIL ENGINEER 4/22/13 DATE

8-26-13
PLANS APPROVAL DATE

REGISTERED PROFESSIONAL ENGINEER Mohan S. Char No. 57894 Exp. 6/30/14 CIVIL STATE OF CALIFORNIA

The State of California or its officers or agents shall not be responsible for the accuracy or completeness of electronic copies of this plan sheet.

TABLE OF REINFORCING STEEL DIMENSIONS AND DATA

DESIGN H	6′	8′	10′	12′	14′	16′	18′	20′	22′	24′	26′	28′	30′	32′
W	6′-9"	7′-3"	8′-0"	8′-9"	10′-0"	11′-6"	12′-9"	14′-0"	15′-9"	18′-0"	19′-9"	21′-9"	23′-3"	25′-3"
C	2′-3"	2′-5"	2′-8"	2′-11"	3′-4"	3′-10"	4′-3"	4′-8"	5′-3"	6′-0"	6′-7"	7′-3"	7′-9"	8′-5"
B	4′-6"	4′-10"	5′-4"	5′-10"	6′-8"	7′-8"	8′-6"	9′-4"	10′-6"	12′-0"	13′-2"	14′-6"	15′-6"	16′-10"
F SPREAD FOOTING	1′-3"	1′-3"	1′-3"	1′-3"	1′-6"	1′-9"	1′-9"	2′-3"	2′-6"	2′-6"	2′-9"	3′-0"	3′-6"	3′-9"
STEM WITH HAUNCH, BATTER	0	½:12	½:12	½:12	½:12	½:12	½:12	½:12	½:12	⅝:12	¾:12	⅞:12	1:12	1:12
STEM WITHOUT HAUNCH, BATTER	0	0	0	0	0	0	0	0	¼:12	¼:12	½:12	¾:12	¾:12	¾:12
ⓐ BARS						#7 @ 15	#7 @ 12	#7 @ 12	#8 @ 12	#6 @ 6	#6 @ 6	#6 @ 6	#8 @ 9	#9 @ 9
ⓑ BARS	#8 @ 12	#8 @ 12	#7 @ 6	#7 @ 6	#7 @ 6	#9 @ 7.5	#9 @ 6	#10 @ 6	#10 @ 6	#8 @ 6ȣ	#8 @ 6ȣ	#8 @ 6ȣ	#10 @ 9ȣ	#11 @ 9ȣ
ha			5′-0"	6′-0"	7′-0"	7′-0"	6′-0"	7′-0"	7′-6"	7′-6"	8′-6"	9′-3"	15′-0"	11′-3"
hb						11′-6"	12′-0"	13′-3"	16′-0"	15′-6"	17′-6"	18′-9"	21′-0"	20′-9"
hy	2′-0"	2′-4"	1′-8"	2′-0"	2′-4"	2′-10"	2′-10"	3′-7"	3′-7"	4′-6"	5′-6"	2′-10"	4′-6"	5′-6"
hz			0	0	3′-1"	3′-7"	4′-0"	4′-5"	5′-0"	3′-0"	3′-0"	3′-6"	5′-6"	3′-0"
ⓒ BARS	#6 @ 12	#7 @ 12	#5 @ 6	#6 @ 6	#7 @ 6	#8 @ 7.5	#8 @ 6	#9 @ 6	#9 @ 6	#10 @ 6	#11 @ 6	#8 @ 6ȣ	#10 @ 9ȣ	#11 @ 9ȣ
SER I: B′(ft), q_0'(ksf)	5.9, 1.2	6.0, 1.4	6.5, 1.6	7.0, 1.8	8.1, 1.9	9.7, 2.0	11.0, 2.1	12.1, 2.3	13.8, 2.4	16.6, 2.4	18.5, 2.6	20.7, 2.7	22.1, 2.9	24.3, 3.0
STR Ia: B′(ft), q_0(ksf)	6.3, 1.9	6.3, 2.3	6.7, 2.5	7.0, 2.9	8.1, 3.1	9.5, 3.2	10.8, 3.4	11.8, 3.7	13.4, 4.0	16.2, 4.0	18.0, 4.2	20.2, 4.4	21.5, 5.0	23.7, 5.0
STR, Ib: B′(ft), q_0(ksf)	4.3, 1.6	4.3, 2.0	4.3, 2.4	4.3, 2.8	4.3, 2.9	4.3, 2.9	4.3, 3.0	4.3, 3.4	4.3, 3.5	4.3, 3.4	4.3, 3.5	4.3, 3.6	4.3, 3.9	4.3, 4.1
STR, IIIa: B′(ft), q_0(ksf)	4.3, 2.1	4.3, 2.4	4.3, 2.5	4.3, 2.8	4.3, 2.9	4.3, 3.0	4.3, 3.2	4.3, 3.7	4.3, 3.7	4.3, 3.8	4.3, 4.0	4.3, 4.2	4.3, 4.6	4.3, 4.9
STR, IIIb: B′(ft), q_0(ksf)	3.2, 2.1	3.2, 2.3	3.2, 2.4	3.2, 2.6	3.2, 2.7	3.2, 2.7	3.2, 2.8	3.2, 3.1	3.2, 3.0	3.2, 3.2	3.2, 3.8	3.2, 3.4	3.2, 3.7	3.2, 3.9
STR, Va: B′(ft), q_0(ksf)	5.9, 2.0	5.9, 2.3	5.9, 2.6	5.9, 2.9	5.9, 3.1	5.9, 3.2	5.9, 3.4	5.9, 3.9	5.9, 3.9	5.9, 4.0	5.9, 4.2	5.9, 4.5	5.9, 4.9	5.9, 5.1
STR, Vb: B′(ft), q_0(ksf)	3.8, 1.7	3.8, 2.1	3.8, 2.5	3.8, 2.8	3.8, 2.9	3.8, 2.9	3.8, 3.0	3.8, 3.3	3.8, 3.4	3.8, 3.3	3.8, 3.5	3.8, 3.6	3.8, 3.9	3.8, 4.0
Ext I: B′(ft), q_0(ksf)	2.5, 2.8	2.5, 4.3	2.5, 6.4	2.5, 10.9	2.5, 13.3	2.5, 12.4	2.5, 13.2	2.5, 17.6	2.5, 15.0	2.5, 10.2	2.5, 10.0	2.5, 9.6	2.5, 10.8	2.5, 10.5
Ext II: B′(ft), q_0(ksf)	1.4, 4.9	1.4, 3.5	1.4, 2.8	1.4, 2.7	1.4, 2.5	1.4, 2.5	1.4, 2.5	1.4, 2.6	1.4, 2.8	1.4, 2.8	1.4, 2.9	1.4, 3.1	1.4, 3.3	1.4, 3.5

LEGEND:
SER: service limit state
STR: strength limit state
EXT: extreme event limit state
B′ : effective footing width (ft)
q_0' : net bearing stress (ksf)

q_0 : gross uniform bearing stress (ksf)

ȣ : 2 bar bundle

STANDARD DRAWING
FILE NO. xs14-220-2
APPROVAL DATE January 2012

STATE OF CALIFORNIA
DEPARTMENT OF TRANSPORTATION

DIVISION OF ENGINEERING SERVICES

BRIDGE NO. 55E0153
POST MILE 4.99

RETAINING WALL NO. 274R
RETAINING WALL TYPE 1SWB-DETAILS NO. 2

DS OSD 2147A (ENGLISH STANDARD DRAWING "XS" BORDER REV. (02-02-11)

ORIGINAL SCALE IN INCHES FOR REDUCED PLANS 0 1 2 3

UNIT:
PROJECT NUMBER & PHASE: 1200020278
CONTRACT NO.: 12-0F96C1

DISREGARD PRINTS BEARING EARLIER REVISION DATES
REVISION DATES 04-21-12 09-24-12 01-14-13 04-22-13
SHEET 4 OF 8

FILE => RW274R-g-rwdt02.dgn

USERNAME => s124496 DATE PLOTTED => 23-AUG-2013 TIME PLOTTED => 03:06

DIST	COUNTY	ROUTE	POST MILES TOTAL PROJECT	SHEET No.	TOTAL SHEETS
12	Ora	5	3.7/6.2	703	780

REGISTERED CIVIL ENGINEER — DATE 4/22/13

8-26-13
PLANS APPROVAL DATE

REGISTERED PROFESSIONAL ENGINEER — Mohan S. Char — No. 57894 — Exp. 6/30/14 — CIVIL — STATE OF CALIFORNIA

The State of California or its officers or agents shall not be responsible for the accuracy or completeness of electronic copies of this plan sheet.

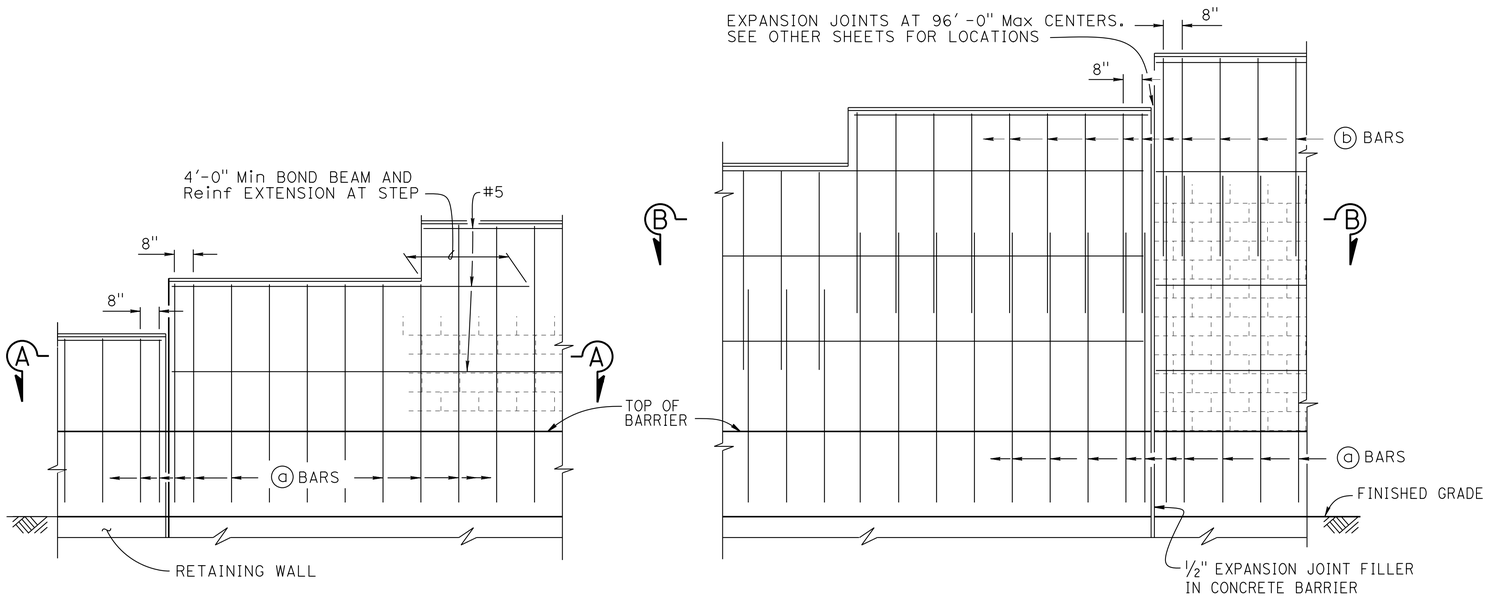

H=6'-4" THRU H=10'-4"

H=12'-4" THRU H=16'-4"

PART ELEVATION

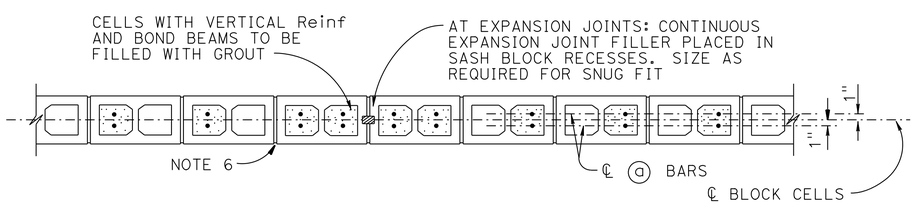

SECTION A-A

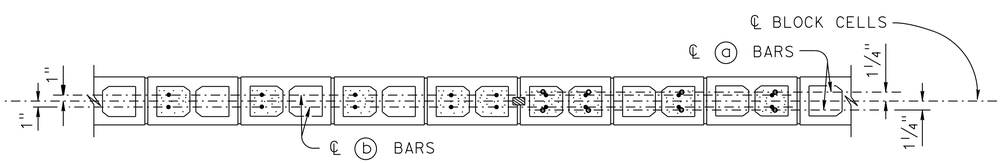

SECTION B-B

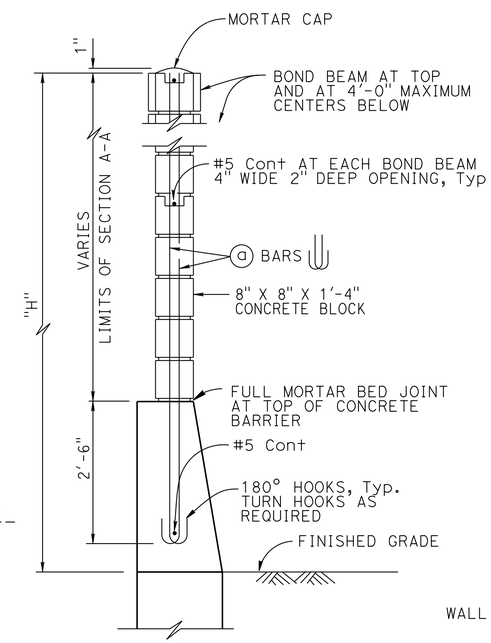

H=6'-4" THRU H=10'-4"

For details not shown, see H=12'-4" thru H=16'-4"

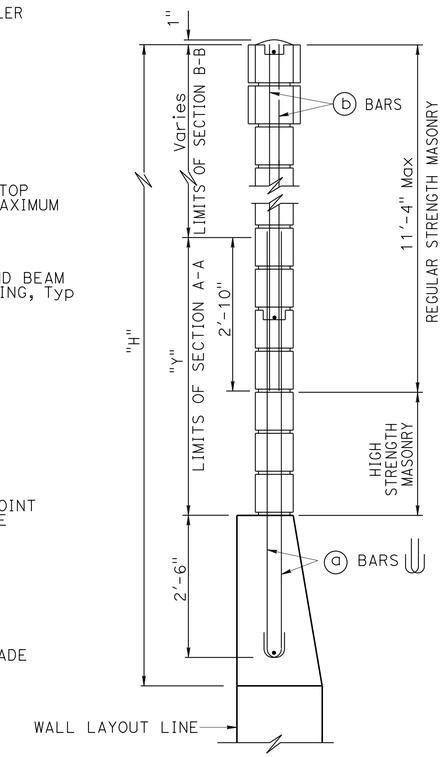

H=12'-4" THRU H=16'-4"

For details not shown, see H=6'-4" thru H=10'-4"

① TYPICAL SECTION

SOUND WALL REINFORCEMENT TABLE

MAXIMUM "H"	ⓐ BARS @ 1'-4" Max	ⓑ BARS @ 1'-4" Max	"Y"	f'm (psi)	COMPRESSIVE STRENGTH OF CMU (psi)	MAXIMUM "H"
6'-4"	#4	—	—	1500	1900	6'-4"
8'-4"	#4	—	—	1500	1900	8'-4"
10'-4"	#4	—	—	1500	1900	10'-4"
12'-4"	#5	#4	5'-0"	1500	1900	12'-4"
14'-4"	#6	#4	7'-0"	1500	1900	14'-4"
16'-4"	#6	#4	9'-0"	2500	3700	16'-4"

NOTES:

1. For details not shown, see "MASONRY BLOCK SOUND WALL WITH BARRIER ON RETAINING WALL-DETAILS NO. 2" sheet. ②
2. Slope ground at traffic side of barrier to drain. Maximum slope ±10%.
3. See STANDARD PLANS B15-9 for other details.
4. For type of block and joint finish, see other sheets.
5. When blocks are laid in stacked bond, ladder type, galvanized joint reinforcement shall be provided. A minimum of 2-9 gauge wire continuous at 4'-0" maximum to be used. Locate reinforcement in joints that are at the approximate midpoint between bond beams.
6. Horizontal joints shall be tooled concave or may be weathered. Vertical joints shall be tooled concave or may be raked.
7. For intermediate wall heights that are between the "H's" given, use the tabular information for the next higher "H".
8. Masonry strengths are listed in "SOUND WALL REINFORCEMENT TABLE".
9. Concrete to be used for the barrier shall contain not less than 590 pounds of cementitious material per cubic yard.

NO SCALE

SPECIAL DETAILS

RETAINING WALL NO. 274R

MASONRY BLOCK SOUND WALL WITH BARRIER ON RETAINING WALL

DETAILS NO. 1

REVISED STANDARD DRAWING

FILE NO. xs15-130-1

APPROVAL DATE July 2012

① MODIFIED DETAIL
② REVISED NOTE

STATE OF CALIFORNIA
DEPARTMENT OF TRANSPORTATION

DIVISION OF ENGINEERING SERVICES

BRIDGE NO. 55E0153
POST MILE 4.99

DS OSD 2147A (ENGLISH STANDARD DRAWING "XS" BORDER REV. (02-02-11)

ORIGINAL SCALE IN INCHES FOR REDUCED PLANS 0 1 2 3

UNIT:
PROJECT NUMBER & PHASE: 1200020278
CONTRACT NO.: 12-0F96C1

DISREGARD PRINTS BEARING EARLIER REVISION DATES

REVISION DATES: 04-21-12 09-24-12 01-14-13 04-22-13

SHEET 5 OF 8

FILE => RW274R-g-rwdt03.dgn

USERNAME => S124496 DATE PLOTTED => 29-AUG-2013 TIME PLOTTED => 09:06

DIST	COUNTY	ROUTE	POST MILES TOTAL PROJECT	SHEET No.	TOTAL SHEETS
12	Ora	5	3.7/6.2	704	780

REGISTERED CIVIL ENGINEER 4/22/13 DATE

8-26-13
PLANS APPROVAL DATE

REGISTERED PROFESSIONAL ENGINEER Mohan S. Char No. 57894 Exp. 6/30/14 CIVIL STATE OF CALIFORNIA

The State of California or its officers or agents shall not be responsible for the accuracy or completeness of electronic copies of this plan sheet.

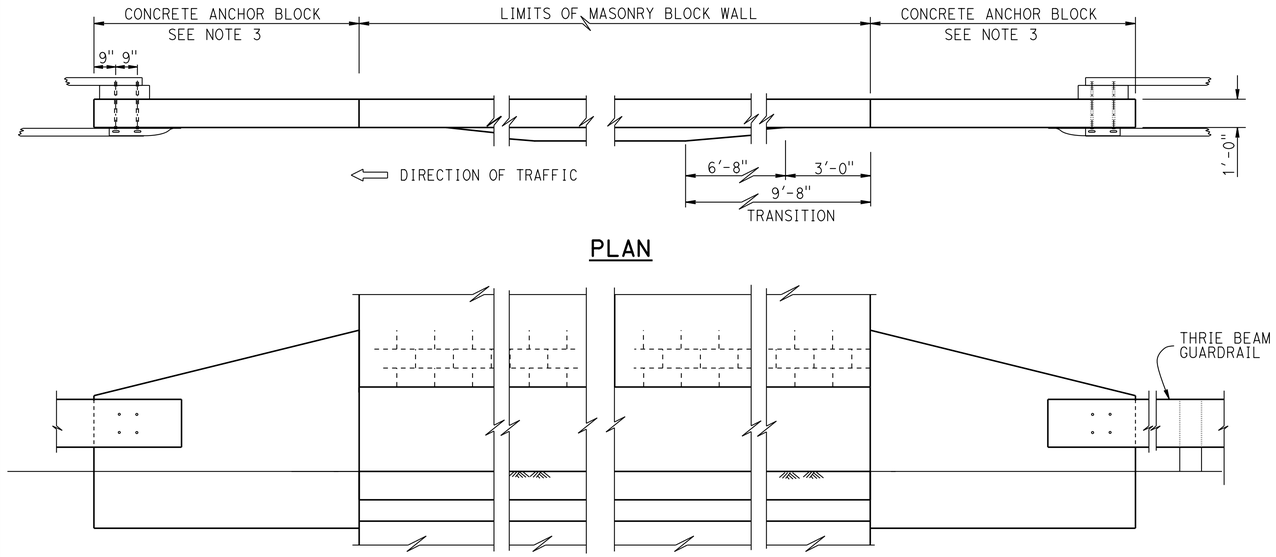

PLAN

ELEVATION

METAL BEAM GUARDRAIL ANCHORAGE

For details not shown, see STANDARD PLAN B11-56

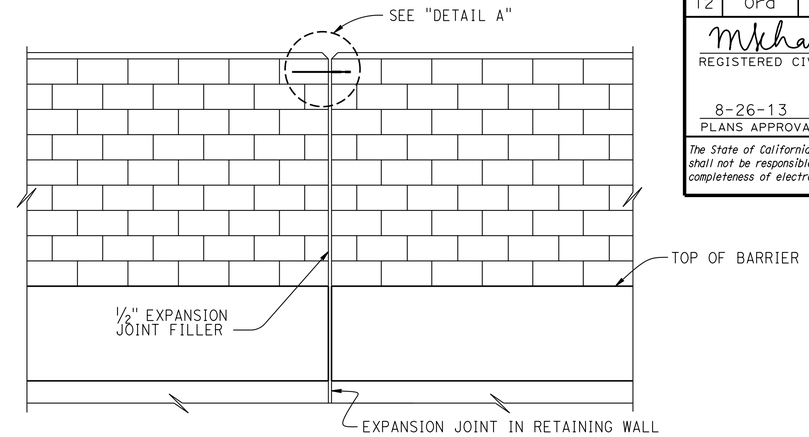

ALIGNMENT KEY DETAIL

3 For sound wall block type, see "SOUND WALL DETAILS" sheet.

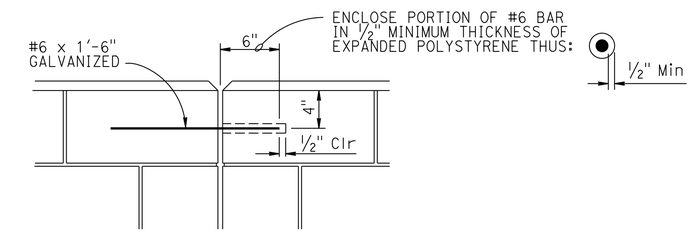

DETAIL A

1

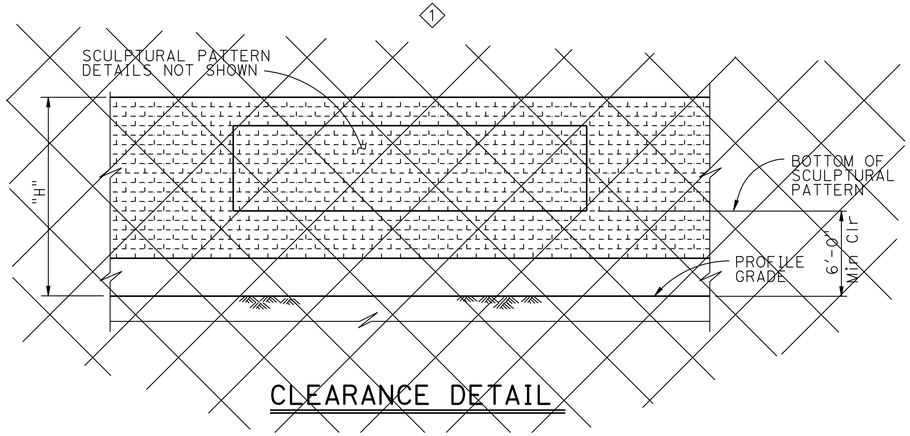

CLEARANCE DETAIL

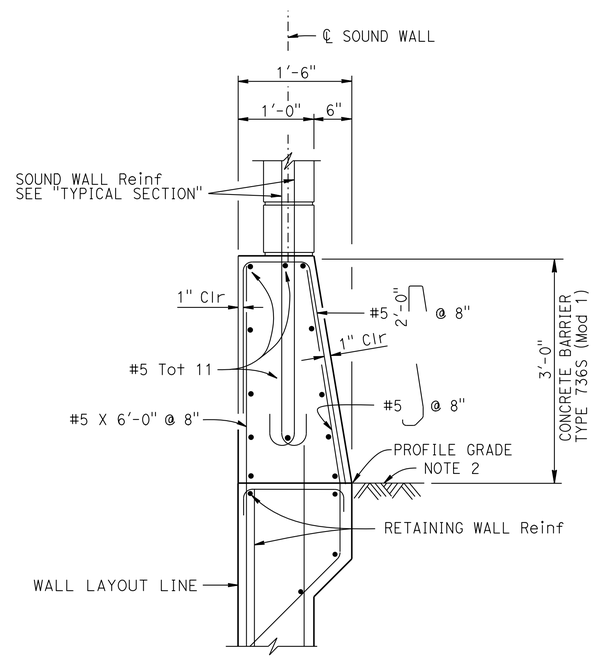

2 BARRIER SECTION

DESIGN NOTES

DESIGN
Uniform Building Code, 1997 Edition and the Bridge Design Specifications

DESIGN WIND LOAD
33 psf

DESIGN SEISMIC LOAD
0.57 Dead load

REINFORCED CONCRETE
f'c = 3600 psi
fy = 60 ksi

CONCRETE MASONRY

REGULAR STRENGTH	HIGH STRENGTH	
f'm = 1500 psi	f'm = 2000 psi	f'm = 2500 psi
fb = 495 psi	fb = 660 psi	fb = 830 psi
fs = 24,000 psi	fs = 24,000 psi	fs = 24,000 psi
n = 25.8	n = 19.3	n = 15.5

NOTES:

1. For details not shown, see STANDARD PLAN B15-6.
2. Slope ground at traffic side of barrier to drain. Maximum slope ±10% See STANDARD PLAN B11-56, Note D.
3. For Concrete Anchor Block and connection details, see "CONNNECTION DETAIL DD" on STANDARD PLAN A77J3.

NO SCALE

SPECIAL DETAILS

RETAINING WALL NO. 274R

MASONRY BLOCK SOUND WALL WITH BARRIER ON RETAINING WALL

DETAILS NO. 2

REVISED STANDARD DRAWING

FILE NO. xs15-130-2

APPROVAL DATE July 2011

1 DOES NOT APPLY
2 MODIFIED DETAIL
3 ADDED NOTE

STATE OF CALIFORNIA DEPARTMENT OF TRANSPORTATION

DIVISION OF ENGINEERING SERVICES

BRIDGE NO. 55E0153
POST MILE 4.99

DS OSD 2147A (ENGLISH STANDARD DRAWING "XS" BORDER REV. (02-02-11)

ORIGINAL SCALE IN INCHES FOR REDUCED PLANS 0 1 2 3

UNIT:
PROJECT NUMBER & PHASE: 1200020278
CONTRACT NO.: 12-0F96C1

DISREGARD PRINTS BEARING EARLIER REVISION DATES

REVISION DATES 04-27-12 09-24-12 01-14-13 04-22-13

SHEET 6 OF 8

FILE => RW274R-g-rwdt04.dgn

USERNAME => S124496 DATE PLOTTED => 29-AUG-2013 TIME PLOTTED => 09:07

DIST	COUNTY	ROUTE	POST MILES TOTAL PROJECT	SHEET No	TOTAL SHEETS
12	Ora	5	3.7/6.2	705	780

REGISTERED CIVIL ENGINEER — DATE 4/22/13

8-26-13
PLANS APPROVAL DATE

REGISTERED PROFESSIONAL ENGINEER — MOHAN S. CHAR — No. 57894 — Exp. 6/30/14 — CIVIL — STATE OF CALIFORNIA

The State of California or its officers or agents shall not be responsible for the accuracy or completeness of electronic copies of this plan sheet.

ORANGE COUNTY TRANSPORTATION AUTHORITY
550 SOUTH MAIN STREET
ORANGE, CA 92863-1584

AECOM TECHNICAL SERVICES INC.
999 W. TOWN & COUNTRY ROAD
ORANGE, CALIFORNIA 92868

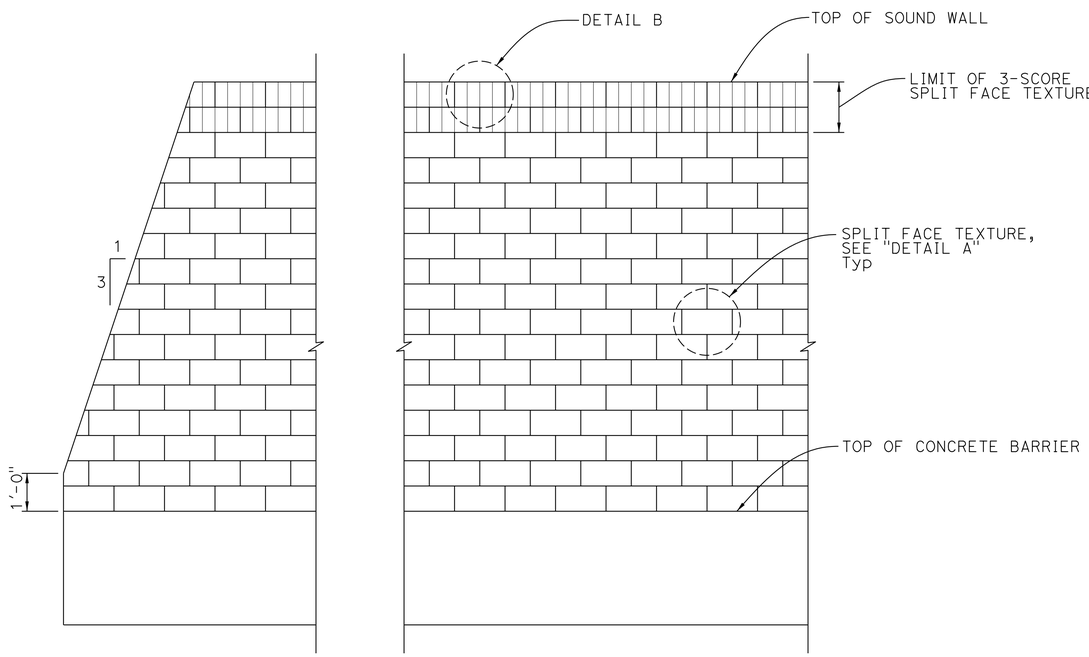

PART ELEVATION
NO SCALE

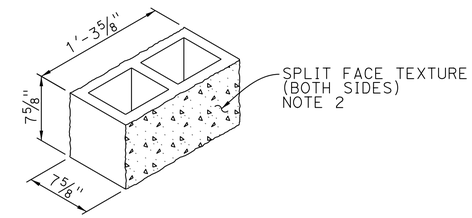

DETAIL A
NO SCALE

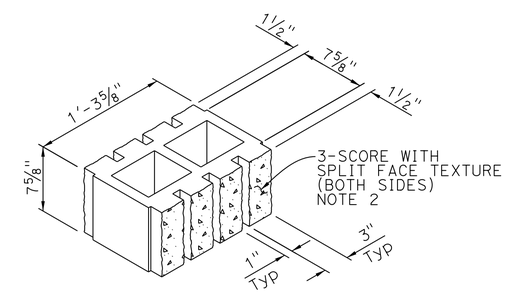

DETAIL B
NO SCALE

NOTE:

1. Block size shall be 8" x 8" x 1'-4".
2. Block color shall match existing sound walls nearby.

Luqi Yang
DESIGN OVERSIGHT — Luqi Yang
5-15-13
SIGN OFF DATE

DESIGN	BY J. Quinoveva	CHECKED C. Weber
DETAILS	BY H. Withers	CHECKED C. Weber
QUANTITIES	BY J. Quinoveva	CHECKED D. Kim

PREPARED FOR THE STATE OF CALIFORNIA DEPARTMENT OF TRANSPORTATION

Mohan S. Char
PROJECT ENGINEER

BRIDGE NO. 55E0153
POST MILES 4.99

RETAINING WALL NO. 274R
SOUND WALL DETAILS

DESIGN DETAIL SHEET (ENGLISH) (REV.7/16/10)

ORIGINAL SCALE IN INCHES FOR REDUCED PLANS 0 1 2 3

UNIT:
PROJECT NUMBER & PHASE: 1200020278
CONTRACT NO.: 12-0F96C1

DISREGARD PRINTS BEARING EARLIER REVISION DATES

REVISION DATES: 08-24-12 01-14-13 04-22-13

SHEET 7 OF 8

FILE => RW274R-g-rwdt05.dgn

USERNAME => s124496 DATE PLOTTED => 29-AUG-2013 TIME PLOTTED => 09:07

DIST	COUNTY	ROUTE	POST MILES TOTAL PROJECT	SHEET No	TOTAL SHEETS
12	Ora	5	3.7/6.2	706	780

REGISTERED ENGINEER — DATE 4/22/13

8-26-13
PLANS APPROVAL DATE

REGISTERED PROFESSIONAL ENGINEER — A. KORKOS NO. GE 2357 EXP. 3-31-14 GEOTECHNICAL — STATE OF CALIFORNIA

The State of California or its officers or agents shall not be responsible for the accuracy or completeness of electronic copies of this plan sheet.

ORANGE COUNTY TRANSPORTATION AUTHORITY
550 SOUTH MAIN STREET
ORANGE, CA 92863-1584

EARTH MECHANICS, INC.
17800 NEWHOPE STREET, SUITE B
FOUNTAIN VALLEY, CA 92708

BENCH MARK

DESIGNATION: 3SS-2-82 ELEV 95.558′

DESCRIBED BY OCS 2003 - FOUND 3¾" OCS ALUMINUM BENCH MARK DISK STAMPED "3SS-2-82", SET IN THE SOUTHEASTERLY CORNER OF A 4 FT. BY 4.5 FT. CONCRETE CATCH BASIN. MONUMENT IS LOCATED ALONG THE NORTHWESTERLY SIDE OF AVENIDA VAQUERO, 100 FT. NORTHERLY OF THE NORTHERLY EDGE OF THE SAN DIEGO FREEWAY OVERCROSSING OF AVENIDA VAQUERO, 23 FT. WESTERLY OF THE CENTERLINE OF VAQUERO AND 29.2 FT. SOUTHERLY OF A STREET STANDARD NO NUMBER. MONUMENT IS SET LEVEL WITH THE TOP OF THE CURB.

NOTES:

(1) This LOTB sheet was prepared in accordance with the Caltrans Soil and Rock Logging, Classification and Presentation Manual (June 2010)

(2) 2.4" samples were taken using a California Modified Sampler.

(3) An automatic trip hammer system consisting of a hammer weight of 140 lbs falling a distance of 30" was used to advance the drive sampler.

(4) Conversion factor from 2.4" Modified California Ring Sampler blowcounts to Standard Penetration Test (SPT) blowcounts is 0.5.

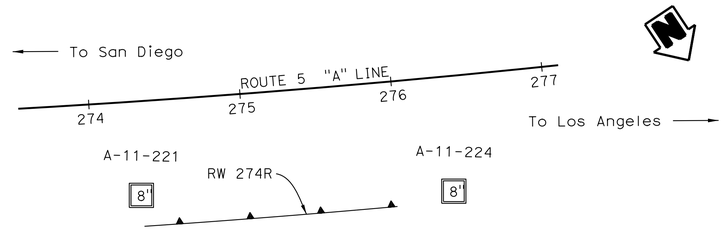

PLAN

1" = 50′

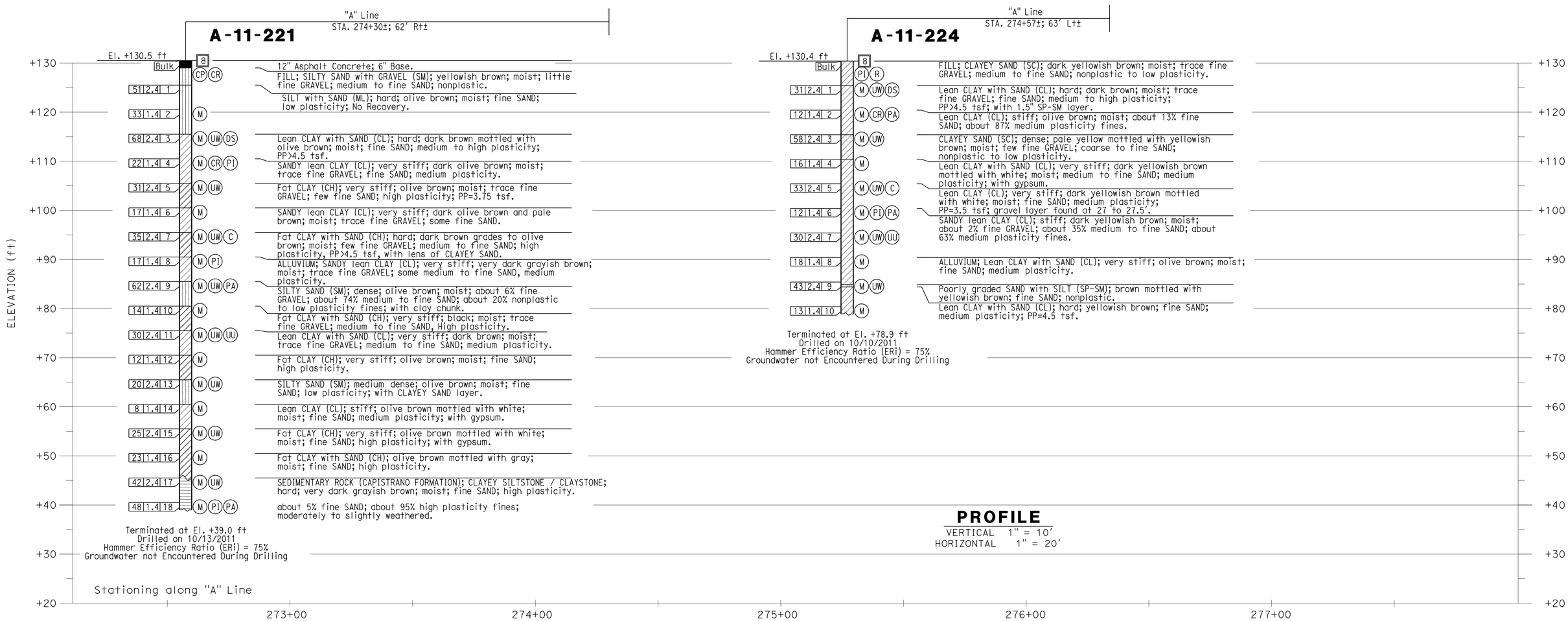

PROFILE

VERTICAL 1" = 10′
HORIZONTAL 1" = 20′

DESIGN OVERSIGHT Luqi Yang — 5-15-13 SIGN OFF DATE	DRAWN BY	J. FANG	R. JIE FIELD INVESTIGATION BY:	PREPARED FOR THE STATE OF CALIFORNIA DEPARTMENT OF TRANSPORTATION	A. KORKOS PROJECT ENGINEER	BRIDGE NO. 55E0153 / POST MILES 4.99
	CHECKED BY	G. J. GUNARANJAN	DATE: 9/2011, 10/2011			

RETAINING WALL NO. 274R
LOG OF TEST BORINGS

GS GEOTECHNICAL LOG OF TEST BORINGS SHEET (ENGLISH) (REV. 7/16/10)

ORIGINAL SCALE IN INCHES FOR REDUCED PLANS 0 1 2 3

UNIT: -
PROJECT NUMBER & PHASE: 12000202781

DISREGARD PRINTS BEARING EARLIER REVISION DATES → REVISION DATES 04-27-12 09-24-12 01-14-13 04-22-13

SHEET 8 OF 8

FILE => RW274R-z-lotb1.dgn

CONTRACT NO.: 12-0F96C1 PROJECT ID: 1200020278

USERNAME => s124496 DATE PLOTTED => 29-AUG-2013 TIME PLOTTED => 09:07

DIST	COUNTY	ROUTE	POST MILES TOTAL PROJECT	SHEET No	TOTAL SHEETS
12	Ora	5	3.7/6.2	707	780

REGISTERED CIVIL ENGINEER — DATE 4/22/13

8-26-13
PLANS APPROVAL DATE

REGISTERED PROFESSIONAL ENGINEER — MOHAN S. CHAR No. 57894 Exp. 6/30/14 CIVIL — STATE OF CALIFORNIA

The State of California or its officers or agents shall not be responsible for the accuracy or completeness of electronic copies of this plan sheet.

ORANGE COUNTY TRANSPORTATION AUTHORITY
550 SOUTH MAIN STREET
ORANGE, CA 92863-1584

AECOM TECHNICAL SERVICES INC.
999 W. TOWN & COUNTRY ROAD
ORANGE, CALIFORNIA 92868

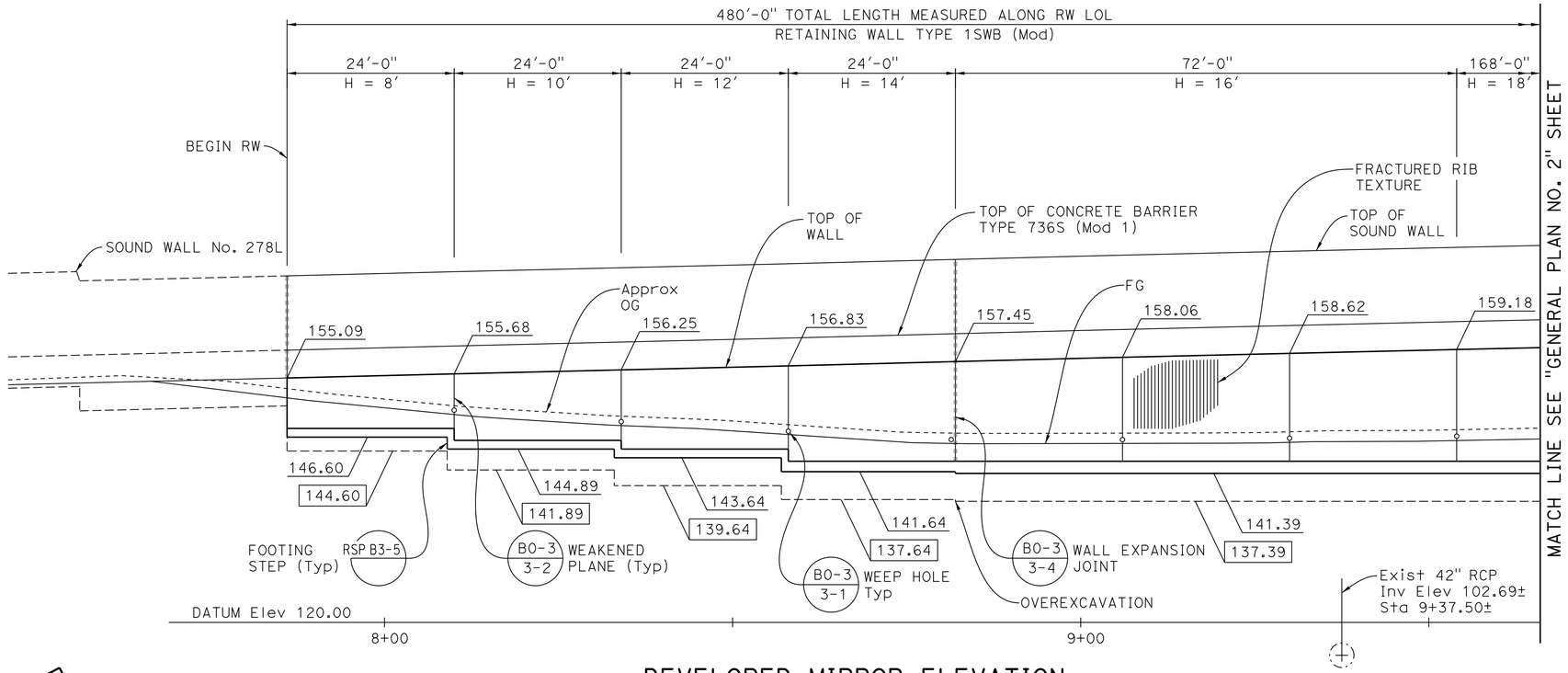

DEVELOPED MIRROR ELEVATION

1" = 10'

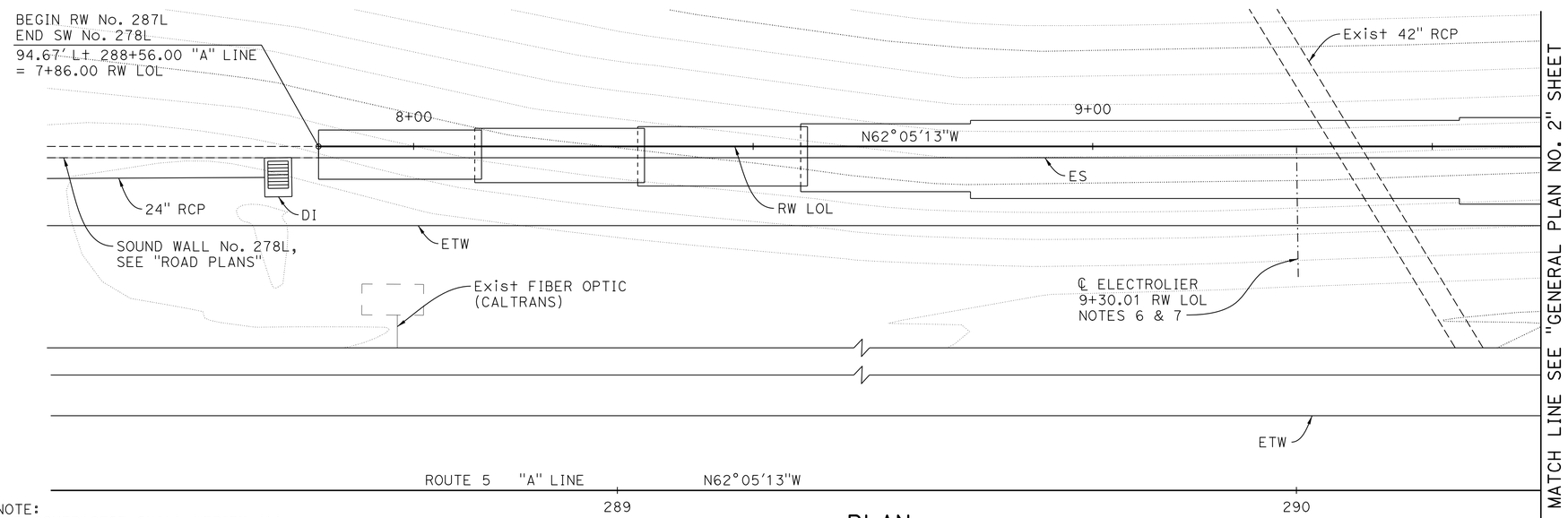

PLAN

1" = 10'

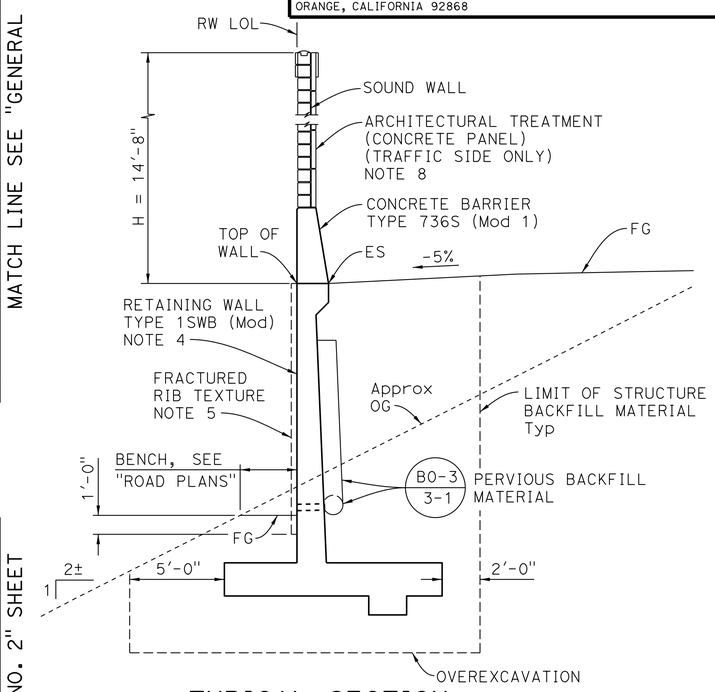

TYPICAL SECTION

¼" = 1'-0"

NOTES:

1. All wall expansion joints, weakened planes and footing steps occur at intervals of 24'-0" unless shown otherwise.
2. For "INDEX TO PLANS" and "LEGEND", see "INDEX TO PLANS" sheet.
3. For "QUANTITIES", see "GENERAL PLAN NO. 2" sheet.
4. For Retaining Wall Type 1SWB (Mod) details, see "RETAINING WALL TYPE 1SWB (MOD)-DETAILS NO. 1" sheet.
5. For "FRACTURED RIB TEXTURE", see "INDEX TO PLANS" sheet.
6. For electrolier pedestal details, see B11-56
7. For electrolier opening in sound wall details, see "ELECTROLIER OPENING DETAILS" sheet.
8. For architectural treatment details, see "SOUND WALL DETAILS" sheet.

NOTE:
THE CONTRACTOR SHALL VERIFY ALL CONTROLLING FIELD DIMENSIONS BEFORE ORDERING OR FABRICATING ANY MATERIAL.

Luqi Yang
DESIGN OVERSIGHT Luqi Yang
5-15-13
SIGN OFF DATE

	BY	CHECKED
DESIGN	J. Quinoveva	C. Weber
DETAILS	J. Quinoveva	C. Weber
QUANTITIES	J. Quinoveva	D. Kim

LOAD & RESISTANCE FACTOR DESIGN — LIVE LOADING: HL93 W/"LOW-BOY"; PERMIT DESIGN VEHICLE

	BY	CHECKED
LAYOUT	J. Quinoveva	C. Weber
SPECIFICATIONS	M. Char	PLANS AND SPECS COMPARED M. Char

PREPARED FOR THE STATE OF CALIFORNIA DEPARTMENT OF TRANSPORTATION

Mohan S. Char
PROJECT ENGINEER

BRIDGE NO. 55E0151
POST MILES 5.26

RETAINING WALL NO. 287L
GENERAL PLAN NO. 1

DESIGN GENERAL PLAN SHEET (ENGLISH) (REV.7/16/10)

ORIGINAL SCALE IN INCHES FOR REDUCED PLANS 0 1 2 3

UNIT:
PROJECT NUMBER & PHASE: 1200020278 CONTRACT NO.: 12-0F96C1

DISREGARD PRINTS BEARING EARLIER REVISION DATES

REVISION DATES: 04-27-12 09-24-12 01-14-13 04-22-13 — SHEET 1 OF 11

FILE => RW287L-a-gp01.dgn

USERNAME => s124396 DATE PLOTTED => 29-AUG-2013 TIME PLOTTED => 09:07

DIST	COUNTY	ROUTE	POST MILES TOTAL PROJECT	SHEET No	TOTAL SHEETS
12	Ora	5	3.7/6.2	708	780

REGISTERED CIVIL ENGINEER 4/22/13 DATE

8-26-13
PLANS APPROVAL DATE

REGISTERED PROFESSIONAL ENGINEER MOHAN S. CHAR No. 57894 Exp. 6/30/14 CIVIL STATE OF CALIFORNIA

The State of California or its officers or agents shall not be responsible for the accuracy or completeness of electronic copies of this plan sheet.

ORANGE COUNTY TRANSPORTATION AUTHORITY
550 SOUTH MAIN STREET
ORANGE, CA 92863-1584

AECOM TECHNICAL SERVICES INC.
999 W. TOWN & COUNTRY ROAD
ORANGE, CALIFORNIA 92868

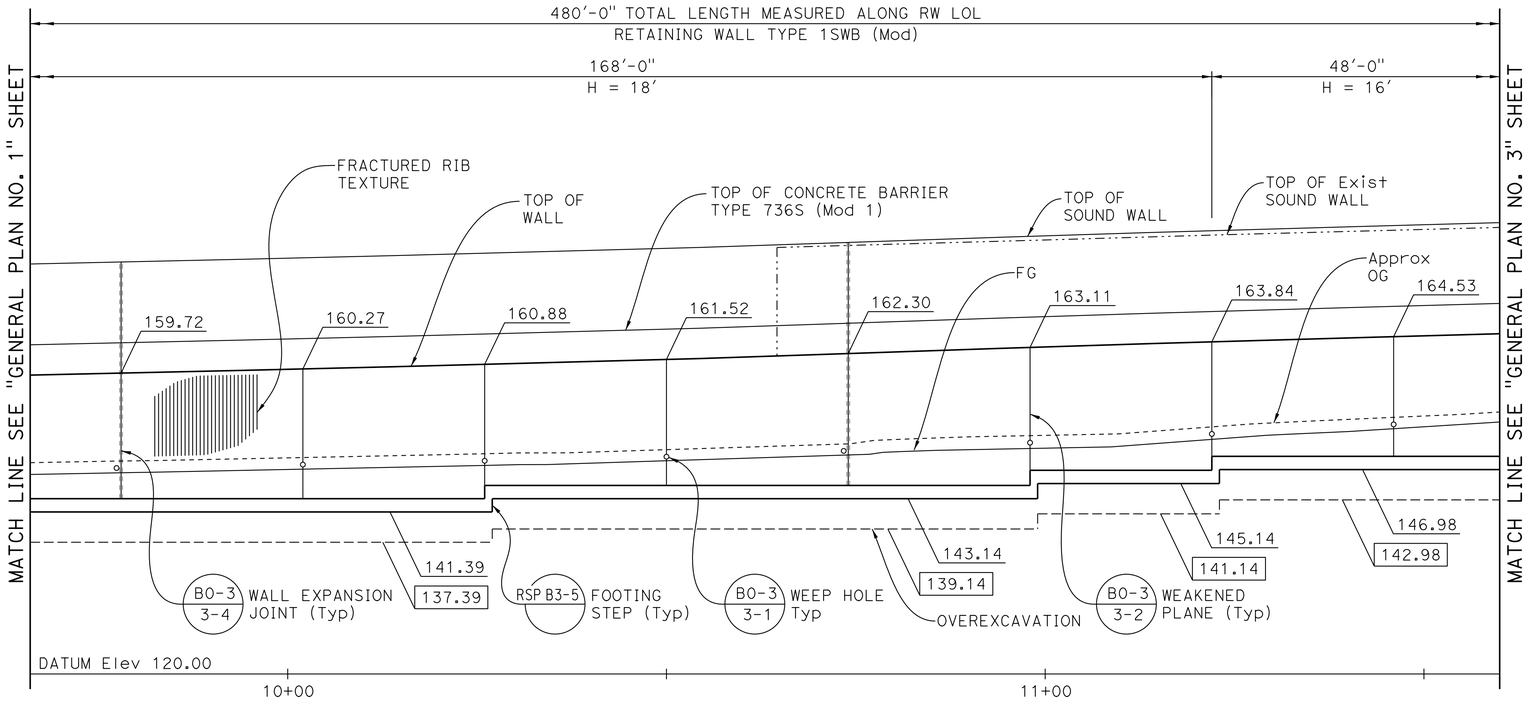

DEVELOPED MIRROR ELEVATION

1" = 10'

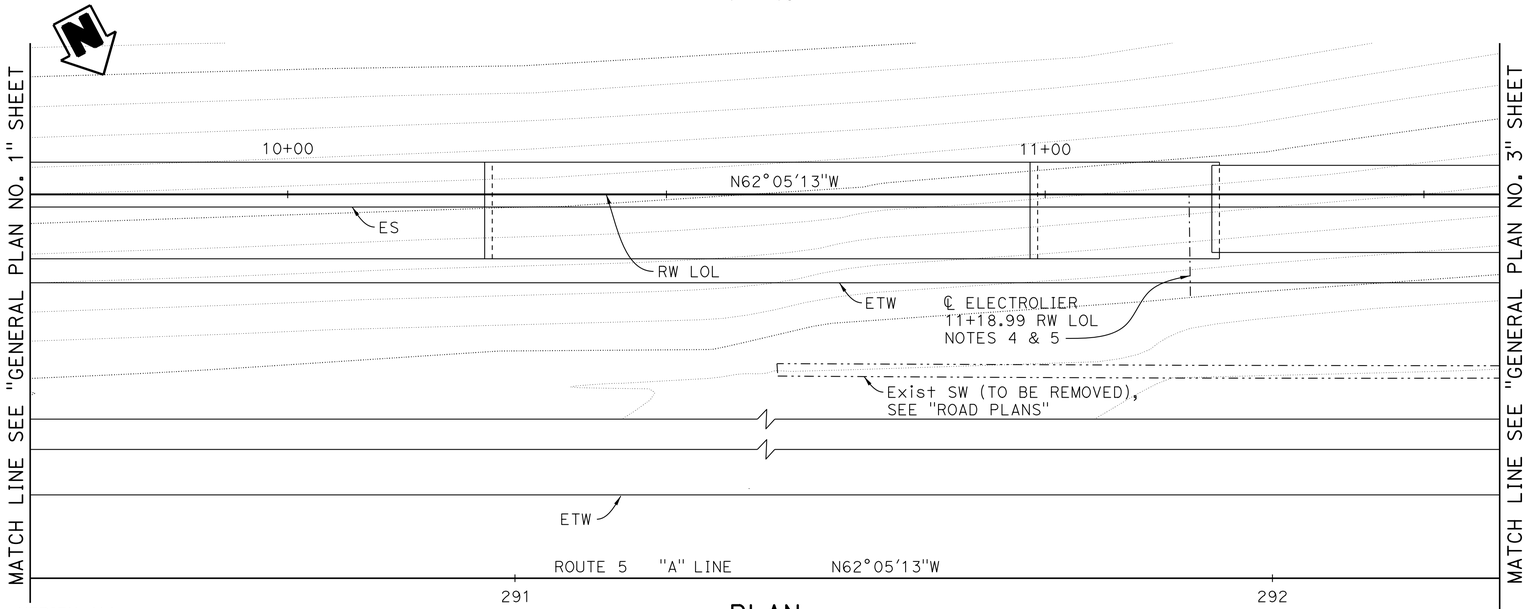

PLAN

1" = 10'

NOTE:
THE CONTRACTOR SHALL VERIFY ALL CONTROLLING FIELD DIMENSIONS BEFORE ORDERING OR FABRICATING ANY MATERIAL.

RETAINING WALL NO. 287L

QUANTITIES

STRUCTURE EXCAVATION (RETAINING WALL)	2,995	CY
STRUCTURE BACKFILL (RETAINING WALL)	3,275	CY
PERVIOUS BACKFILL MATERIAL (RETAINING WALL)	155	CY
STRUCTURAL CONCRETE, RETAINING WALL	725	CY
ARCHITECTURAL TREATMENT (CONCRETE PANEL)	5,120	SQFT
FRACTURED RIB TEXTURE	5,734	SQFT
DRILL AND BOND DOWEL (CHEMICAL ADHESIVE)	53	EA
BAR REINFORCING STEEL (RETAINING WALL)	101,000	LB
SOUND WALL (MASONRY BLOCK)	5,120	SQFT
MISCELLANEOUS METAL	300	LB
CONCRETE BARRIER (TYPE 736S MODIFIED 1)	480	LF

NOTES:

1. All wall expansion joints, weakened planes and footing steps occur at intervals of 24'-0" unless shown otherwise.
2. For "INDEX TO PLANS" and "LEGEND", see "INDEX TO PLANS" sheet.
3. For "TYPICAL SECTION", see "GENERAL PLAN NO. 1" sheet.
4. For electrolier pedestal details, see RSP B11-56
5. For electrolier opening in sound wall details, see "ELECTROLIER OPENING DETAILS" sheet.

Luqi Yang
DESIGN OVERSIGHT Luqi Yang
5-15-13
SIGN OFF DATE

	BY	CHECKED
DESIGN	J. Quinoveva	C. Weber
DETAILS	J. Quinoveva	C. Weber
QUANTITIES	J. Quinoveva	D. Kim

LOAD & RESISTANCE FACTOR DESIGN — LIVE LOADING: HL93 W/"LOW-BOY"; PERMIT DESIGN VEHICLE

	BY	CHECKED
LAYOUT	J. Quinoveva	C. Weber
SPECIFICATIONS	M. Char	PLANS AND SPECS COMPARED M. Char

PREPARED FOR THE STATE OF CALIFORNIA DEPARTMENT OF TRANSPORTATION

Mohan S. Char
PROJECT ENGINEER

BRIDGE NO. 55E0151
POST MILES 5.26

RETAINING WALL NO. 287L
GENERAL PLAN NO. 2

DESIGN GENERAL PLAN SHEET (ENGLISH) (REV.7/16/10)

ORIGINAL SCALE IN INCHES FOR REDUCED PLANS 0 1 2 3

UNIT:
PROJECT NUMBER & PHASE: 1200020278 CONTRACT NO.: 12-0F96C1

DISREGARD PRINTS BEARING EARLIER REVISION DATES → 04-27-12 09-24-12 01-14-13 04-22-13

SHEET 2 OF 11

FILE => RW287L-a-gp02.dgn

USERNAME => s124496 DATE PLOTTED => 29-AUG-2013 TIME PLOTTED => 03:07

DIST	COUNTY	ROUTE	POST MILES TOTAL PROJECT	SHEET No	TOTAL SHEETS
12	Ora	5	3.7/6.2	709	780

REGISTERED CIVIL ENGINEER — DATE 4/22/13

8-26-13
PLANS APPROVAL DATE

REGISTERED PROFESSIONAL ENGINEER — MOHAN S. CHAR — No. 57894 — Exp. 6/30/14 — CIVIL — STATE OF CALIFORNIA

The State of California or its officers or agents shall not be responsible for the accuracy or completeness of electronic copies of this plan sheet.

ORANGE COUNTY TRANSPORTATION AUTHORITY
550 SOUTH MAIN STREET
ORANGE, CA 92863-1584

AECOM TECHNICAL SERVICES INC.
999 W. TOWN & COUNTRY ROAD
ORANGE, CALIFORNIA 92868

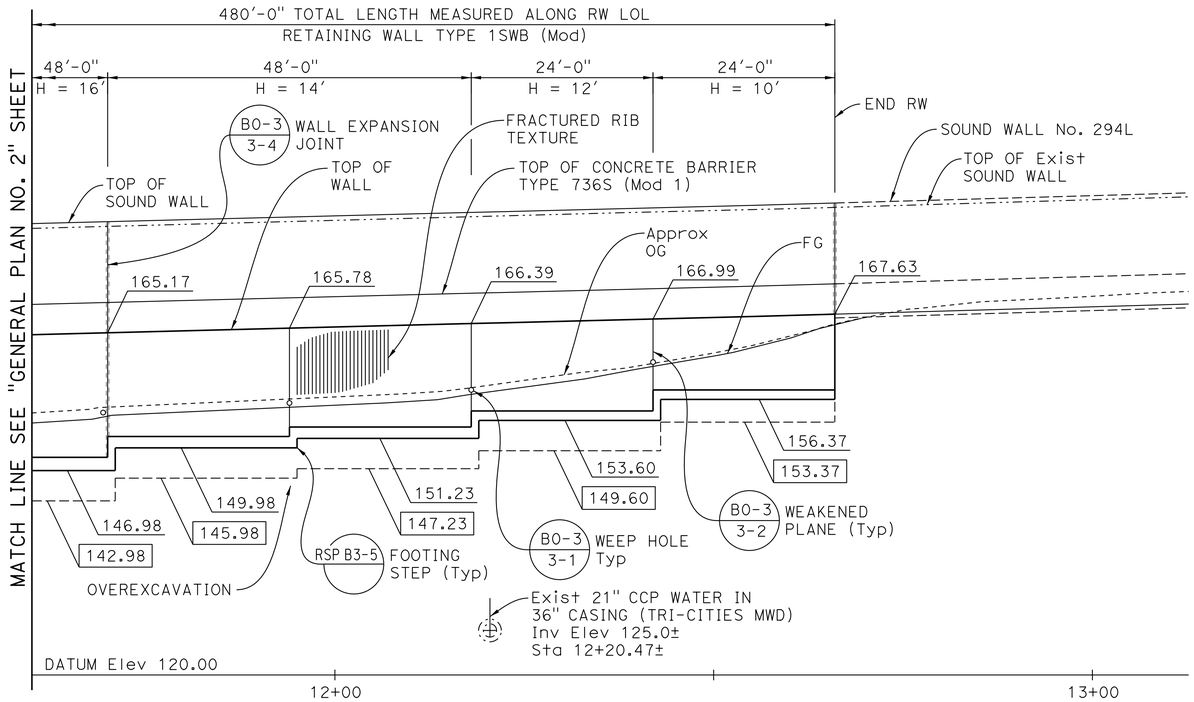

DEVELOPED MIRROR ELEVATION

1" = 10'

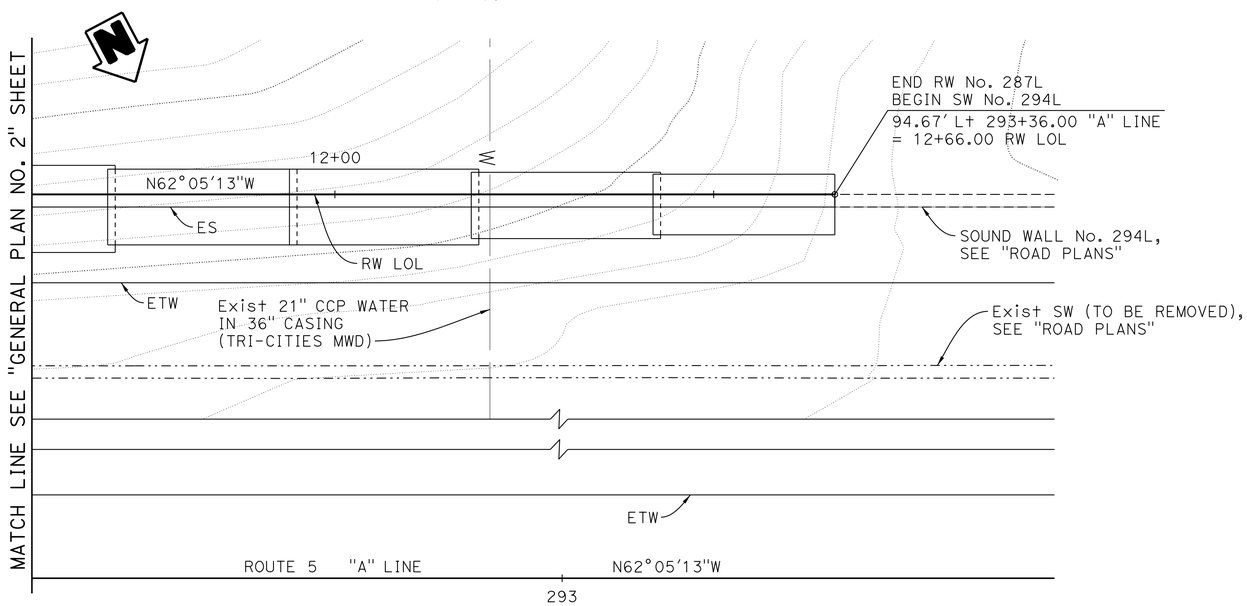

PLAN

1" = 10'

NOTES:

1. All wall expansion joints, weakened planes and footing steps occur at intervals of 24'-0" unless shown otherwise.
2. For "INDEX TO PLANS" and "LEGEND", see "INDEX TO PLANS" sheet.
3. For "TYPICAL SECTION", see "GENERAL PLAN NO. 1" sheet.

NOTE:
THE CONTRACTOR SHALL VERIFY ALL CONTROLLING FIELD DIMENSIONS BEFORE ORDERING OR FABRICATING ANY MATERIAL.

DESIGN OVERSIGHT Luqi Yang — 5-15-13 SIGN OFF DATE	DESIGN	BY J. Quinoveva	CHECKED C. Weber	LOAD & RESISTANCE FACTOR DESIGN — LIVE LOADING: HL93 W/"LOW-BOY"; PERMIT DESIGN VEHICLE
	DETAILS	BY J. Quinoveva	CHECKED C. Weber	LAYOUT — BY J. Quinoveva — CHECKED C. Weber
	QUANTITIES	BY J. Quinoveva	CHECKED D. Kim	SPECIFICATIONS — BY M. Char — PLANS AND SPECS COMPARED M. Char

PREPARED FOR THE STATE OF CALIFORNIA DEPARTMENT OF TRANSPORTATION

Mohan S. Char
PROJECT ENGINEER

BRIDGE NO. 55E0151
POST MILES 5.26

RETAINING WALL NO. 287L
GENERAL PLAN NO. 3

DESIGN GENERAL PLAN SHEET (ENGLISH) (REV.7/16/10)

ORIGINAL SCALE IN INCHES FOR REDUCED PLANS 0 1 2 3

UNIT:
PROJECT NUMBER & PHASE: 1200020278 CONTRACT NO.: 12-0F96C1

DISREGARD PRINTS BEARING EARLIER REVISION DATES

REVISION DATES: 04-27-12 09-24-12 01-14-13 04-22-13 — SHEET 3 OF 11

FILE => RW287L-a-gp03.dgn

USERNAME => s124496 DATE PLOTTED => 29-AUG-2013 TIME PLOTTED => 09:07

DIST	COUNTY	ROUTE	POST MILES TOTAL PROJECT	SHEET No	TOTAL SHEETS
12	Ora	5	3.7/6.2	710	780

REGISTERED CIVIL ENGINEER — DATE 4/22/13

8-26-13
PLANS APPROVAL DATE

REGISTERED PROFESSIONAL ENGINEER — MOHAN S. CHAR — No. 57894 — Exp. 6/30/14 — CIVIL — STATE OF CALIFORNIA

The State of California or its officers or agents shall not be responsible for the accuracy or completeness of electronic copies of this plan sheet.

ORANGE COUNTY TRANSPORTATION AUTHORITY
550 SOUTH MAIN STREET
ORANGE, CA 92863-1584

AECOM TECHNICAL SERVICES INC.
999 W. TOWN & COUNTRY ROAD
ORANGE, CALIFORNIA 92868

INDEX TO PLANS

No.	Title
1	GENERAL PLAN NO. 1
2	GENERAL PLAN NO. 2
3	GENERAL PLAN NO. 3
4	INDEX TO PLANS
5	RETAINING WALL TYPE 1SWB (MOD)-DETAILS NO. 1
6	RETAINING WALL TYPE 1SWB (MOD)-DETAILS NO. 2
7	MASONRY BLOCK SOUND WALL WITH BARRIER ON RETAINING WALL-DETAILS NO. 1
8	MASONRY BLOCK SOUND WALL WITH BARRIER ON RETAINING WALL-DETAILS NO. 2
9	ELECTROLIER OPENING DETAILS
10	SOUND WALL DETAILS
11	LOG OF TEST BORINGS

STANDARD PLANS 2010 EDITION

	A10A	ABBREVIATIONS (SHEET 1 OF 2)
	A10B	ABBREVIATIONS (SHEET 2 OF 2)
	A10C	LINES AND SYMBOLS (SHEET 1 OF 3)
	A10D	LINES AND SYMBOLS (SHEET 2 OF 3)
	A10E	LINES AND SYMBOLS (SHEET 3 OF 3)
	A10F	LEGEND - SOIL (SHEET 1 OF 2)
	A10G	LEGEND - SOIL (SHEET 2 OF 2)
	A10H	LEGEND - ROCK
	A62B	LIMITS OF PAYMENT FOR EXCAVATION AND BACKFILL - BRIDGE SURCHARGE AND WALL
	B0-3	BRIDGE DETAILS
RSP	B3-5	RETAINING WALL DETAILS NO. 1
RSP	B11-56	CONCRETE BARRIER TYPE 736
RSP	B15-6	SOUND WALL MASONRY BLOCK ON TYPE 736S/SV BARRIER DETAILS (1)
	B15-9	SOUND WALL MASONRY BLOCK MISCELLANEOUS DETAILS

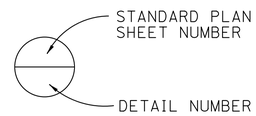

LEGEND

Denotes top of wall elevation (feet)

Denotes bottom of footing elevation (feet)

Denotes bottom of overexcavation (feet)

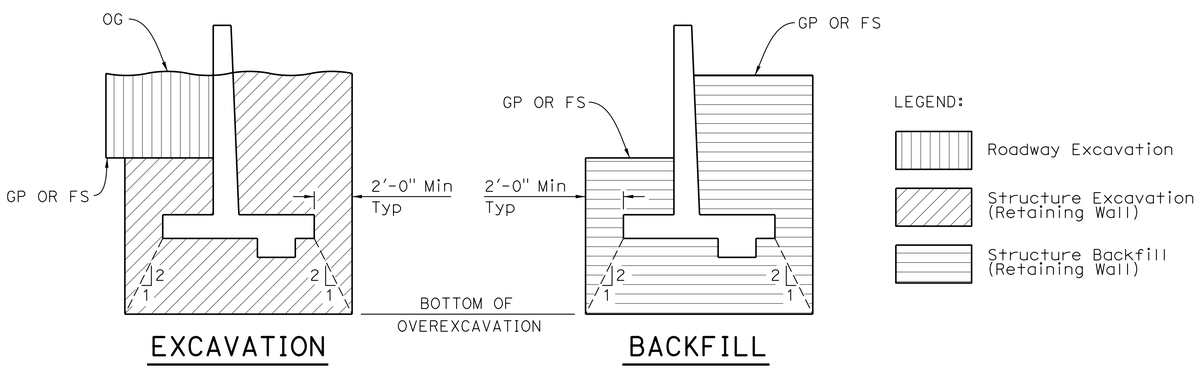

EXCAVATION — BACKFILL

LIMITS OF PAYMENT FOR EXCAVATION AND BACKFILL

NO SCALE

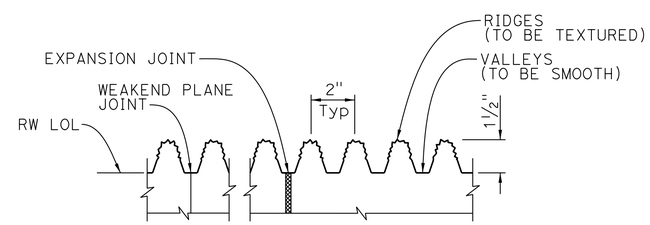

FRACTURED RIB TEXTURE

NO SCALE

NOTE:
Weakened Plane and Expansion Joints to be centered in valleys.

NOTE:
THE CONTRACTOR SHALL VERIFY ALL CONTROLLING FIELD DIMENSIONS BEFORE ORDERING OR FABRICATING ANY MATERIAL.

DESIGN OVERSIGHT Luqi Yang — 5-15-13 SIGN OFF DATE	DESIGN	BY J. Quinoveva	CHECKED C. Weber	LOAD & RESISTANCE FACTOR DESIGN	LIVE LOADING: HL93 W/"LOW-BOY"; PERMIT DESIGN VEHICLE
	DETAILS	BY H. Withers	CHECKED C. Weber	LAYOUT BY J. Quinoveva	CHECKED C. Weber
	QUANTITIES	BY J. Quinoveva	CHECKED D. Kim	SPECIFICATIONS BY M. Char	PLANS AND SPECS COMPARED M. Char

PREPARED FOR THE STATE OF CALIFORNIA DEPARTMENT OF TRANSPORTATION

Mohan S. Char — PROJECT ENGINEER

BRIDGE NO. 55E0151 — POST MILES 5.26

RETAINING WALL NO. 287L
INDEX TO PLANS

DESIGN GENERAL PLAN SHEET (ENGLISH) (REV.7/16/10)

ORIGINAL SCALE IN INCHES FOR REDUCED PLANS 0 1 2 3

UNIT:
PROJECT NUMBER & PHASE: 1200020278 — CONTRACT NO.: 12-0F96C1

DISREGARD PRINTS BEARING EARLIER REVISION DATES → REVISION DATES 04-27-12 05-24-12 01-14-13 04-22-13

SHEET 4 OF 11

FILE => RW287L-a-itp01.dgn

USERNAME => s124496 DATE PLOTTED => 29-AUG-2013 TIME PLOTTED => 09:07

DIST	COUNTY	ROUTE	POST MILES TOTAL PROJECT	SHEET No	TOTAL SHEETS
12	Ora	5	3.7/6.2	711	780

REGISTERED CIVIL ENGINEER — 4/22/13 DATE

8-26-13
PLANS APPROVAL DATE

REGISTERED PROFESSIONAL ENGINEER — MOHAN S. CHAR — No. 57894 — Exp. 6/30/14 — CIVIL — STATE OF CALIFORNIA

The State of California or its officers or agents shall not be responsible for the accuracy or completeness of electronic copies of this plan sheet.

ORANGE COUNTY TRANSPORTATION AUTHORITY
550 SOUTH MAIN STREET
ORANGE, CA 92863-1584

AECOM TECHNICAL SERVICES INC.
999 W. TOWN & COUNTRY ROAD
ORANGE, CALIFORNIA 92868

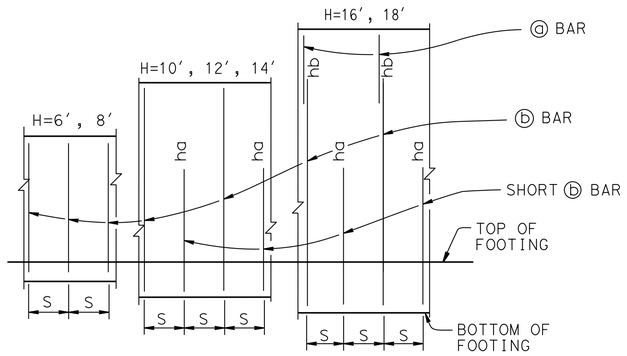

ELEVATION
No Scale

NOTES:
"ha" and "hb" above ⓑ bars indicate distance from top of footing to upper end of ⓑ bars, see table.
"S" is ⓑ bar spacing, see table.

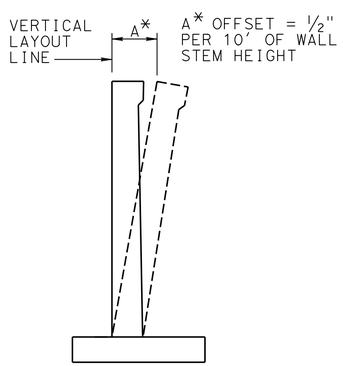

WALL OFFSET
No Scale

Values for offsetting forms to be determined by the Engineer

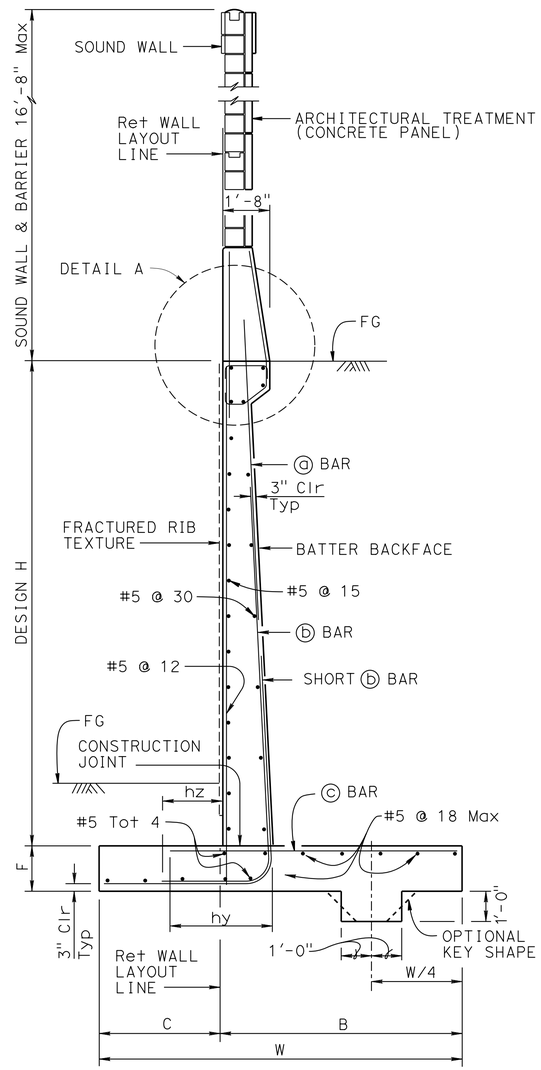

SPREAD FOOTING SECTION
No Scale

DESIGN DATA

Design: AASHTO LRFD Bridge Design Specifications, 4th edition with California Amendments

WS: 33 psf on Sound Wall and Barrier

LS: Varied surcharge on level ground surface

CT: 54 kip maximum traffic impact loading evenly distributed over 10 feet at top of the barrier and 1:1 distribution down and outward

EQE: Trial Wedge Method
K_h = 0.2
K_v = 0.0

Soil: ϕ = 34°
γ = 120 pcf

Reinforced Concrete: f′c = 3600 psi
fy = 60,000 psi

Load Combinations and Limit States

Service I	Q=1.00DC+1.00EV+1.00EH+1.00LS+0.30WS
Service II	Q=1.00DC+1.00EV+1.00EH+1.00WS
Strength I	Q=aDC+βEV+1.50EH+1.75LS
Strength III	Q=aDC+βEV+1.50EH+1.40WS
Strength V	Q=aDC+βEV+1.50EH+1.35LS+0.40WS
Extreme I	Q=1.00DC+1.00EV+1.00EH+1.00EQD+1.00EQE
Extreme II	Q=1.00DC+1.00EV+1.00EH+1.00CT

Where:
Q: Force Effects
a: 1.25 or 0.90, Which ever Controls Design
B: 1.35 or 1.00, which ever Controls Design
DC: Dead Load of Structure Components
EV: Vertical Earth Fill Pressure
LS: Live Load Surcharge
EQE: Seismic Earth Pressure
EQD: Soil and Structure Components Inertia. Soil inertia ignored for stem design
WS: Wind Load on Sound Wall and Barrier
CT: Vehicular Collision Force

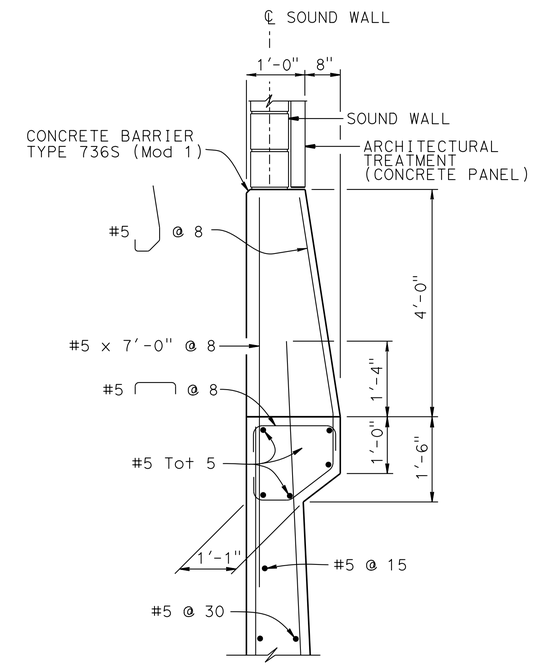

DETAIL A
3/4 = 1′-0"

NOTES:

1. For retaining wall fractured rib texture, see "INDEX TO PLANS" sheet and for sound wall aesthetics, see "SOUND WALL DETAILS" sheet.
2. For details not shown and drainage notes see RSP B3-5
3. Footing cover, 1′-6" minimum.
4. For sound wall and barrier reinforcement details, see "MASONRY BLOCK SOUND WALL WITH BARRIER ON RETAINING WALL-DETAILS NO. 1" sheet.
5. For H = 6′ through 14′, extend ⓑ bars into Barrier for stem with haunch.
6. For H ≥ 16′, extend ⓐ bars into Barrier for stem with haunch.

Luqi Yang
DESIGN OVERSIGHT — Luqi Yang
5-15-13
SIGN OFF DATE

	BY	CHECKED
DESIGN	L. He	J. Leimberger
DETAILS	H. Withers	C. Weber
QUANTITIES	J. Quinoveva	D. Kim

PREPARED FOR THE STATE OF CALIFORNIA DEPARTMENT OF TRANSPORTATION

Mohan S. Char
PROJECT ENGINEER

BRIDGE NO. 55E0151
POST MILES 5.26

RETAINING WALL NO. 287L
RETAINING WALL TYPE 1SWB (MOD)-DETAILS NO. 1

DESIGN DETAIL SHEET (ENGLISH) (REV.7/16/10)

ORIGINAL SCALE IN INCHES FOR REDUCED PLANS 0 1 2 3

UNIT:
PROJECT NUMBER & PHASE: 1200020278
CONTRACT NO.: 12-0F96C1

DISREGARD PRINTS BEARING EARLIER REVISION DATES — REVISION DATES 01-14-13 04-22-13 — SHEET 5 OF 11

FILE => RW287L-g-rwdt01.dgn

USERNAME => s124496 DATE PLOTTED => 29-AUG-2013 TIME PLOTTED => 09:07

DIST	COUNTY	ROUTE	POST MILES TOTAL PROJECT	SHEET No	TOTAL SHEETS
12	Ora	5	3.7/6.2	712	780

REGISTERED CIVIL ENGINEER — DATE 4/22/13

8-26-13
PLANS APPROVAL DATE

REGISTERED PROFESSIONAL ENGINEER — MOHAN S. CHAR — No. 57894 — Exp. 6/30/14 — CIVIL — STATE OF CALIFORNIA

The State of California or its officers or agents shall not be responsible for the accuracy or completeness of electronic copies of this plan sheet.

ORANGE COUNTY TRANSPORTATION AUTHORITY
550 SOUTH MAIN STREET
ORANGE, CA 92863-1584

AECOM TECHNICAL SERVICES INC.
999 W. TOWN & COUNTRY ROAD
ORANGE, CALIFORNIA 92868

TABLE OF REINFORCING STEEL DIMENSIONS AND DATA

DESIGN H	6′	8′	10′	12′	14′	16′	18′
W	6′-9″	7′-3″	8′-0″	8′-9″	10′-0″	11′-6″	12′-9″
C	2′-3″	2′-5″	2′-8″	2′-11″	3′-4″	3′-10″	4′-3″
B	4′-6″	4′-10″	5′-4″	5′-10″	6′-8″	7′-8″	8′-6″
F SPREAD FOOTING	1′-3″	1′-3″	1′-3″	1′-3″	1′-6″	1′-9″	1′-9″
STEM WITH HAUNCH, BATTER	0	½:12	½:12	½:12	½:12	½:12	½:12
ⓐ BARS						#7 @ 15	#7 @ 12
ⓑ BARS	#8 @ 12	#8 @ 12	#7 @ 6	#7 @ 6	#7 @ 6	#9 @ 7.5	#9 @ 6
ha			5′-0″	6′-0″	7′-0″	7′-0″	6′-0″
hb						11′-6″	12′-0″
hy	2′-0″	2′-4″	1′-8″	2′-0″	2′-4″	2′-10″	2′-10″
hz					3′-6″	4′-0″	4′-6″
ⓒ BARS	#6 @ 12	#7 @ 12	#5 @ 6	#6 @ 6	#7 @ 6	#8 @ 7.5	#8 @ 6
SER I: B′(ft), q_0'(ksf)	5.3, 1.0	5.8, 1.3	6.5, 1.5	7.2, 1.7	8.4, 1.8	9.9, 1.9	11.2, 2.0
STR Ia: B′(ft), q_0(ksf)	5.8, 1.8	6.2, 2.1	6.7, 2.4	7.2, 2.7	8.3, 3.0	9.7, 3.1	10.9, 3.3
STR, Ib: B′(ft), q_0(ksf)	4.7, 1.4	4.5, 1.8	4.6, 2.2	4.7, 2.6	5.7, 2.8	7.1, 2.8	8.3, 2.9
STR, IIIa: B′(ft), q_0(ksf)	4.3, 2.2	5.0, 2.4	5.7, 2.6	6.3, 2.8	7.5, 3.0	9.1, 3.1	10.4, 3.3
STR, IIIb: B′(ft), q_0(ksf)	3.4, 2.1	3.9, 2.2	4.5, 2.5	5.0, 2.7	6.1, 2.8	7.6, 2.8	8.7, 2.9
STR, Va: B′(ft), q_0(ksf)	5.3, 1.8	5.8, 2.1	6.4, 2.4	6.9, 2.7	8.0, 2.9	9.4, 3.1	10.6, 3.3
STR, Vb: B′(ft), q_0(ksf)	4.3, 1.5	4.2, 1.9	4.5, 2.2	4.7, 2.6	5.7, 2.8	7.1, 2.8	8.3, 2.9
Ext I: B′(ft), q_0(ksf)	4.1, 1.8	3.9, 2.2	3.7, 2.8	3.4, 3.6	3.8, 4.2	4.5, 4.5	5.0, 5.0
Ext II: B′(ft), q_0(ksf)	1.7, 4.3	2.7, 3.1	3.8, 2.8	5.2, 2.5	6.9, 2.4	8.8, 2.4	10.3, 2.4

LEGEND:
SER: service limit state
STR: strength limit state
EXT: extreme event limit state
B′ : effective footing width (ft)
q_0' : net bearing stress (ksf)

q_0 : gross uniform bearing stress (ksf)

DESIGN OVERSIGHT Luqi Yang
5-15-13
SIGN OFF DATE

	BY	CHECKED
DESIGN	L. He	J. Leimberger
DETAILS	H. Withers	C. Weber
QUANTITIES	J. Quinoveva	D. Kim

PREPARED FOR THE STATE OF CALIFORNIA DEPARTMENT OF TRANSPORTATION

Mohan S. Char
PROJECT ENGINEER

BRIDGE NO. 55E0151
POST MILES 5.26

RETAINING WALL NO. 287L
RETAINING WALL TYPE 1SWB (MOD)-DETAILS NO. 2

DESIGN DETAIL SHEET (ENGLISH) (REV.7/16/10)

ORIGINAL SCALE IN INCHES FOR REDUCED PLANS 0 1 2 3

UNIT:
PROJECT NUMBER & PHASE: 1200020278 CONTRACT NO.: 12-0F96C1

DISREGARD PRINTS BEARING EARLIER REVISION DATES

REVISION DATES: 01-14-13 04-22-13

SHEET 6 OF 11

FILE => RW287L-g-rwdt02.dgn

USERNAME => s124496 DATE PLOTTED => 29-AUG-2013 TIME PLOTTED => 09:07

DIST	COUNTY	ROUTE	POST MILES TOTAL PROJECT	SHEET No	TOTAL SHEETS
12	Ora	5	3.7/6.2	713	780

REGISTERED CIVIL ENGINEER 4/22/13 DATE

8-26-13
PLANS APPROVAL DATE

REGISTERED PROFESSIONAL ENGINEER MOHAN S. CHAR No. 57894 Exp. 6/30/14 CIVIL STATE OF CALIFORNIA

The State of California or its officers or agents shall not be responsible for the accuracy or completeness of electronic copies of this plan sheet.

ORANGE COUNTY TRANSPORTATION AUTHORITY
550 SOUTH MAIN STREET
ORANGE, CA 92863-1584

AECOM TECHNICAL SERVICES INC.
999 W. TOWN & COUNTRY ROAD
ORANGE, CALIFORNIA 92868

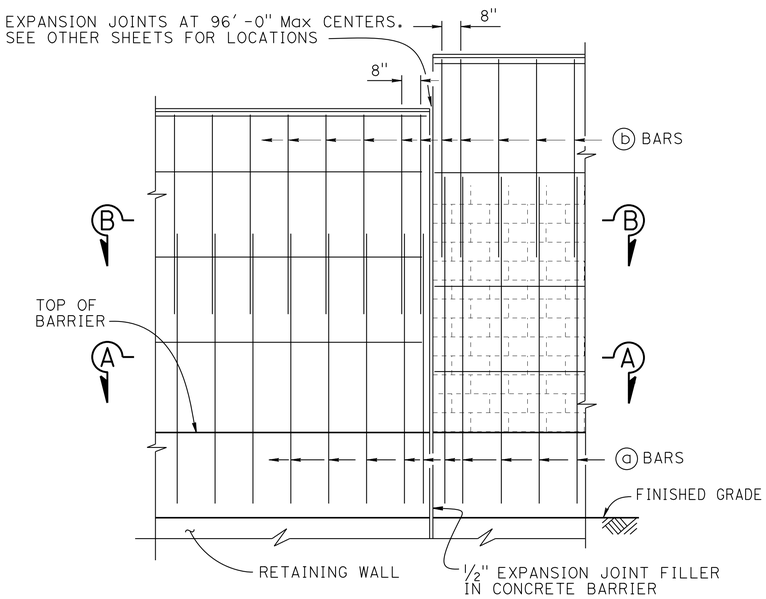

PART ELEVATION
No Scale

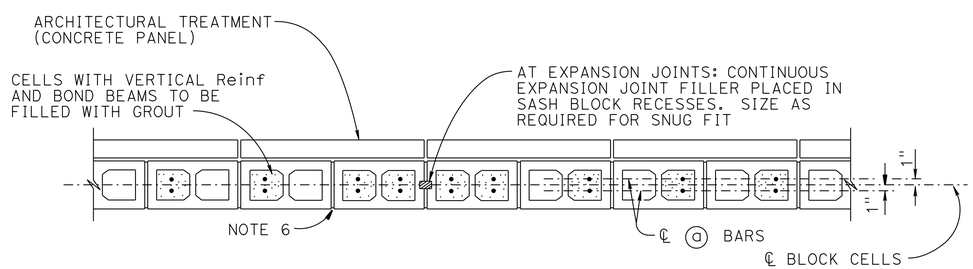

SECTION A-A
No Scale

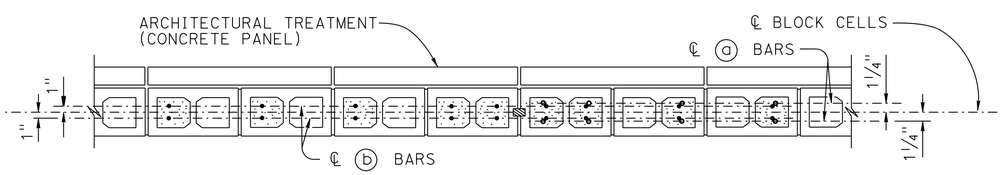

SECTION B-B
No Scale

SOUND WALL REINFORCEMENT TABLE

MAXIMUM "H"	ⓐ BARS @ 1'-4" Max	ⓑ BARS @ 1'-4" Max	"Y"	f'm (psi)	COMPRESSIVE STRENGTH OF CMU (psi)	MAXIMUM "H"
14'-8"	#6	#4	7'-0"	1500	1900	14'-8"
16'-8"	#6	#4	9'-0"	2500	3700	16'-8"

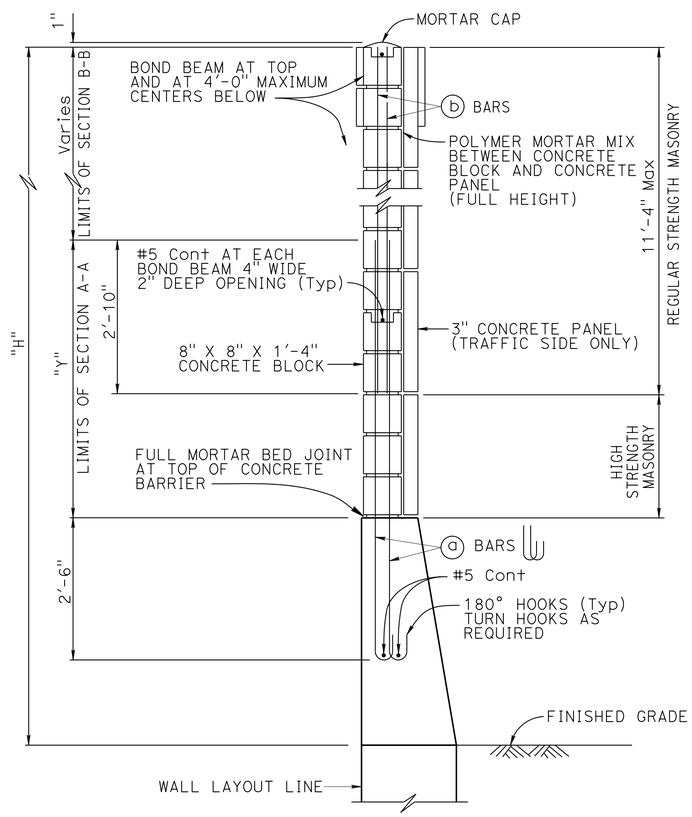

TYPICAL SECTION
No Scale

NOTES:

1. For details not shown, see "MASONRY BLOCK SOUND WALL WITH BARRIER ON RETAINING WALL-DETAILS NO. 2" sheet.
2. Slope ground at traffic side of barrier to drain. Maximum slope ±10%.
3. See STANDARD PLANS B15-9 for other details.
4. For type of block and joint finish, see other sheets.
5. When blocks are laid in stacked bond, ladder type, galvanized joint reinforcement shall be provided. A minimum of 2-9 gauge wire continuous at 4'-0" maximum to be used. Locate reinforcement in joints that are at the approximate midpoint between bond beams.
6. Horizontal joints shall be tooled concave or may be weathered. Vertical joints shall be tooled concave or may be raked.
7. For intermediate wall heights that are between the "H's" given, use the tabular information for the next higher "H".
8. Masonry strengths are listed in "SOUND WALL REINFORCEMENT TABLE".
9. Concrete to be used for the barrier shall contain not less than 590 pounds of cementitious material per cubic yard.

RETAINING WALL NO. 287L

MASONRY BLOCK SOUND WALL WITH BARRIER ON RETAINING WALL

DETAILS NO. 1

Luqi Yang
DESIGN OVERSIGHT Luqi Yang
5-15-13
SIGN OFF DATE

	BY	CHECKED
DESIGN	L. He	J. Leimberger
DETAILS	H. Withers	C. Weber
QUANTITIES	J. Quinoveva	D. Kim

PREPARED FOR THE STATE OF CALIFORNIA DEPARTMENT OF TRANSPORTATION

Mohan S. Char
PROJECT ENGINEER

BRIDGE NO. 55E0151
POST MILES 5.26

DESIGN DETAIL SHEET (ENGLISH) (REV.7/16/10)

ORIGINAL SCALE IN INCHES FOR REDUCED PLANS 0 1 2 3

UNIT:
PROJECT NUMBER & PHASE: 1200020278 CONTRACT NO.: 12-0F96C1

DISREGARD PRINTS BEARING EARLIER REVISION DATES

REVISION DATES 01-14-13 04-22-13

SHEET 7 OF 11

FILE => RW287L-g-rwdt03.dgn

USERNAME => s124496 DATE PLOTTED => 29-AUG-2013 TIME PLOTTED => 09:07

DIST	COUNTY	ROUTE	POST MILES TOTAL PROJECT	SHEET No	TOTAL SHEETS
12	Ora	5	3.7/6.2	714	780

REGISTERED CIVIL ENGINEER — DATE 4/22/13

PLANS APPROVAL DATE 8-26-13

REGISTERED PROFESSIONAL ENGINEER — MOHAN S. CHAR — No. 57894 — Exp. 6/30/14 — CIVIL — STATE OF CALIFORNIA

The State of California or its officers or agents shall not be responsible for the accuracy or completeness of electronic copies of this plan sheet.

ORANGE COUNTY TRANSPORTATION AUTHORITY
550 SOUTH MAIN STREET
ORANGE, CA 92863-1584

AECOM TECHNICAL SERVICES INC.
999 W. TOWN & COUNTRY ROAD
ORANGE, CALIFORNIA 92868

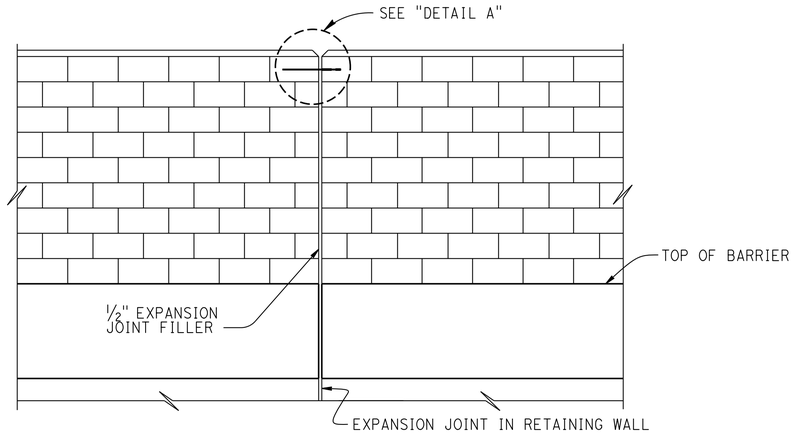

ALIGNMENT KEY DETAIL

No Scale

NOTES:

1. For sound wall block type, see "SOUND WALL DETAILS" sheet.
2. Concrete panel not shown for clarity.

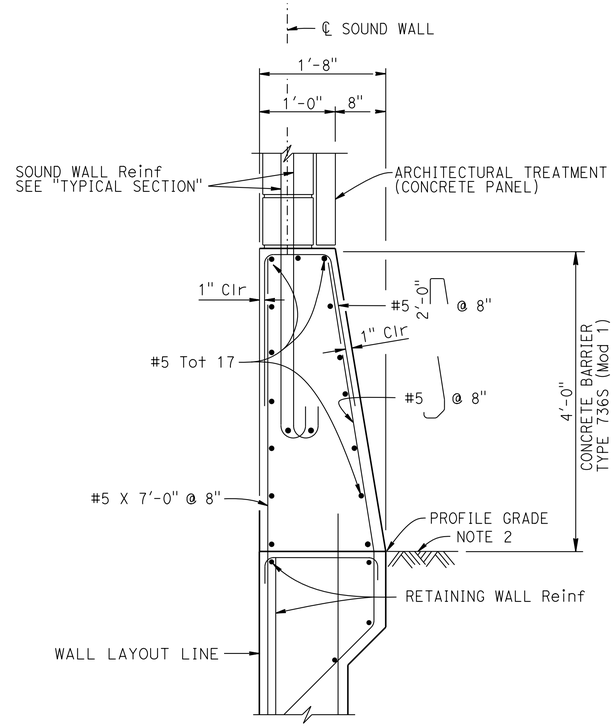

BARRIER SECTION

No Scale

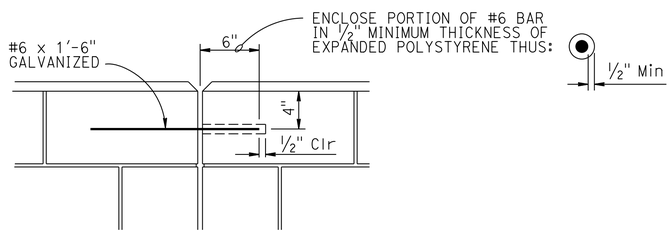

DETAIL A

No Scale

DESIGN NOTES

DESIGN
Uniform Building Code, 1997 Edition and the Bridge Design Specifications

DESIGN WIND LOAD
33 psf

DESIGN SEISMIC LOAD
0.57 Dead load

REINFORCED CONCRETE
f'c = 3600 psi
fy = 60 ksi

CONCRETE MASONRY

REGULAR STRENGTH	HIGH STRENGTH	
f'm = 1500 psi	f'm = 2000 psi	f'm = 2500 psi
fb = 495 psi	fb = 660 psi	fb = 830 psi
fs = 24,000 psi	fs = 24,000 psi	fs = 24,000 psi
n = 25.8	n = 19.3	n = 15.5

NOTES:

1. For details not shown, see STANDARD PLAN B15-6.
2. Slope ground at traffic side of barrier to drain.
   Maximum slope ±10%
   See STANDARD PLAN B11-56, Note D.

DESIGN OVERSIGHT Luqi Yang — 5-15-13 — SIGN OFF DATE

	BY	CHECKED
DESIGN	L. He	J. Leimberger
DETAILS	H. Withers	C. Weber
QUANTITIES	J. Quinoveva	D. Kim

PREPARED FOR THE STATE OF CALIFORNIA DEPARTMENT OF TRANSPORTATION

Mohan S. Char — PROJECT ENGINEER

BRIDGE NO. 55E0151
POST MILES 5.26

RETAINING WALL NO. 287L

MASONRY BLOCK SOUND WALL WITH BARRIER ON RETAINING WALL

DETAILS NO. 2

DESIGN DETAIL SHEET (ENGLISH) (REV.7/16/10)

ORIGINAL SCALE IN INCHES FOR REDUCED PLANS 0 1 2 3

UNIT:
PROJECT NUMBER & PHASE: 1200020278
CONTRACT NO.: 12-0F96C1

DISREGARD PRINTS BEARING EARLIER REVISION DATES — REVISION DATES 01-14-13 04-22-13 — SHEET 8 OF 11

FILE => RW287L-g-rwdt04.dgn

USERNAME => s124496 DATE PLOTTED => 29-AUG-2013 TIME PLOTTED => 09:07

DIST	COUNTY	ROUTE	POST MILES TOTAL PROJECT	SHEET No	TOTAL SHEETS
12	Ora	5	3.7/6.2	715	780

REGISTERED CIVIL ENGINEER — DATE 4/22/13

8-26-13
PLANS APPROVAL DATE

REGISTERED PROFESSIONAL ENGINEER — MOHAN S. CHAR — No. 57894 — Exp. 6/30/14 — CIVIL — STATE OF CALIFORNIA

The State of California or its officers or agents shall not be responsible for the accuracy or completeness of electronic copies of this plan sheet.

ORANGE COUNTY TRANSPORTATION AUTHORITY
550 SOUTH MAIN STREET
ORANGE, CA 92863-1584

AECOM TECHNICAL SERVICES INC.
999 W. TOWN & COUNTRY ROAD
ORANGE, CALIFORNIA 92868

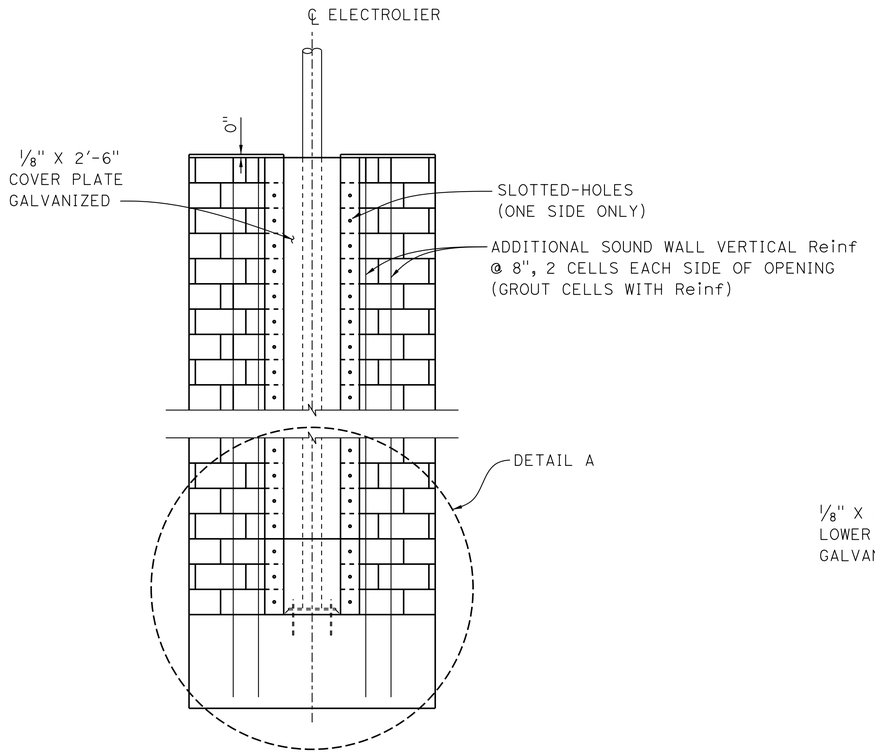

COVER PLATE ELEVATION

1/2" = 1'-0"

NOTE: Concrete panel not shown for clarity.

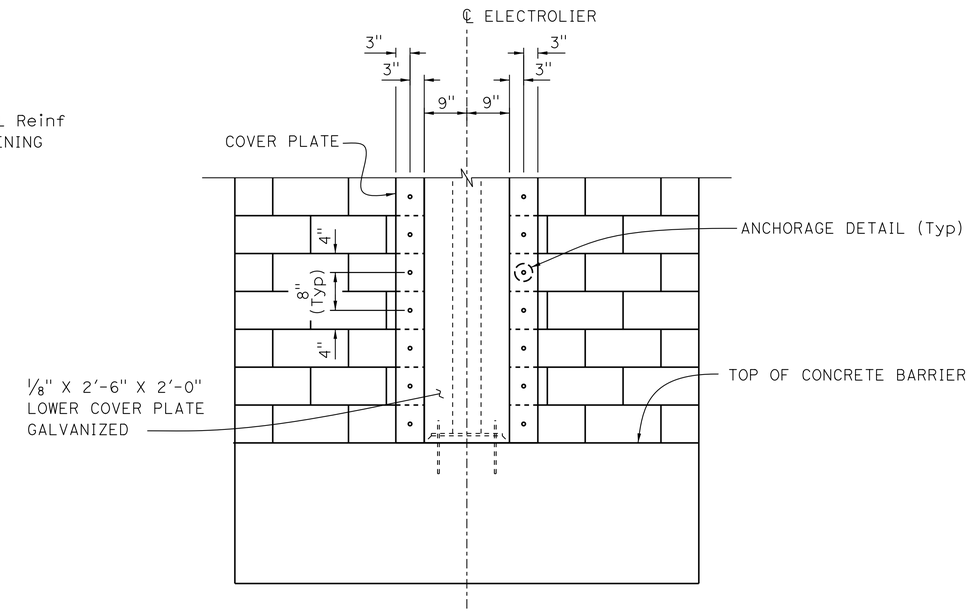

DETAIL A

3/4" = 1'-0"

NOTE: Concrete panel not shown for clarity.

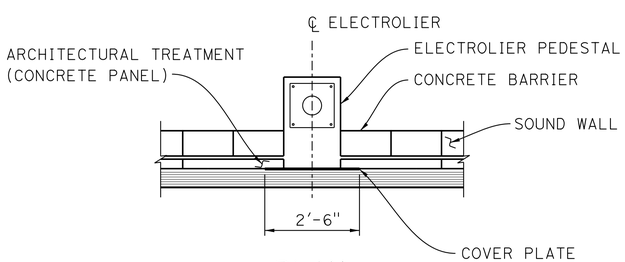

PLAN

1/2" = 1'-0"

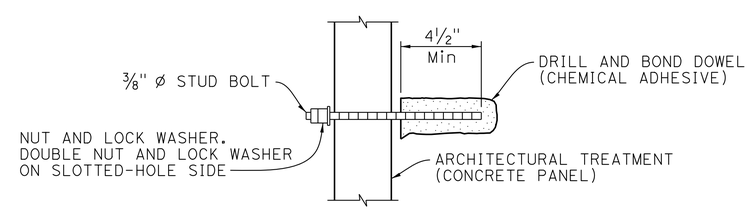

ANCHORAGE DETAIL

3" = 1'-0"

NOTES:

1. Chemical adhesive anchorage is subject to approval by the Engineer. Installation procedures shall comply with Manufacturer's instructions.
2. Finger tighten nut against washer. Torque outside nut against finger tightened nut.
3. Expansion joints shall not be located within 6' of ℄ Electrolier.
4. For Electrolier location and details, see "ROAD PLANS".
5. For Electrolier pedestal and pull box information not shown, see RSP B11-56

DESIGN OVERSIGHT Luqi Yang — 5-15-13 — SIGN OFF DATE

	BY	CHECKED
DESIGN	L. He	J. Leimberger
DETAILS	H. Withers	C. Weber
QUANTITIES	J. Quinoveva	D. Kim

PREPARED FOR THE STATE OF CALIFORNIA DEPARTMENT OF TRANSPORTATION

Mohan S. Char — PROJECT ENGINEER

BRIDGE NO. 55E0151
POST MILES 5.26

RETAINING WALL NO. 287L
ELECTROLIER OPENING DETAILS

DESIGN DETAIL SHEET (ENGLISH) (REV.7/16/10)

ORIGINAL SCALE IN INCHES FOR REDUCED PLANS 0 1 2 3

UNIT:
PROJECT NUMBER & PHASE: 1200020278
CONTRACT NO.: 12-0F96C1

DISREGARD PRINTS BEARING EARLIER REVISION DATES

REVISION DATES: 01-14-13 04-22-13

SHEET 9 OF 11

FILE => RW287L-g-rwdt05.dgn

USERNAME => s124496 DATE PLOTTED => 29-AUG-2013 TIME PLOTTED => 09:07

DIST	COUNTY	ROUTE	POST MILES TOTAL PROJECT	SHEET No	TOTAL SHEETS
12	Ora	5	3.7/6.2	716	780

REGISTERED CIVIL ENGINEER — DATE 4/22/13

8-26-13
PLANS APPROVAL DATE

REGISTERED PROFESSIONAL ENGINEER — MOHAN S. CHAR — No. 57894 — Exp. 6/30/14 — CIVIL — STATE OF CALIFORNIA

The State of California or its officers or agents shall not be responsible for the accuracy or completeness of electronic copies of this plan sheet.

ORANGE COUNTY TRANSPORTATION AUTHORITY
550 SOUTH MAIN STREET
ORANGE, CA 92863-1584

AECOM TECHNICAL SERVICES INC.
999 W. TOWN & COUNTRY ROAD
ORANGE, CALIFORNIA 92868

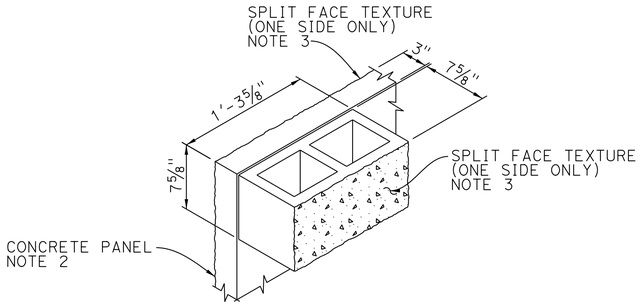

DETAIL A
NO SCALE

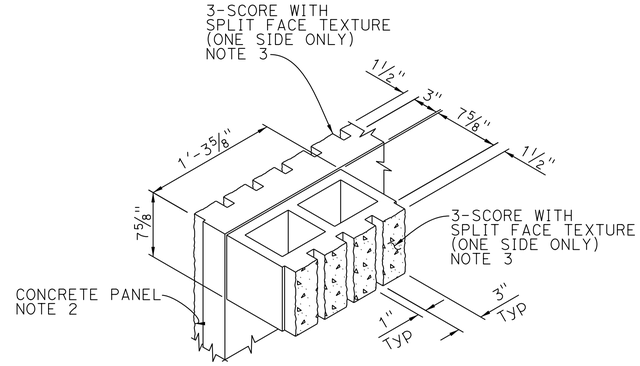

DETAIL B
NO SCALE

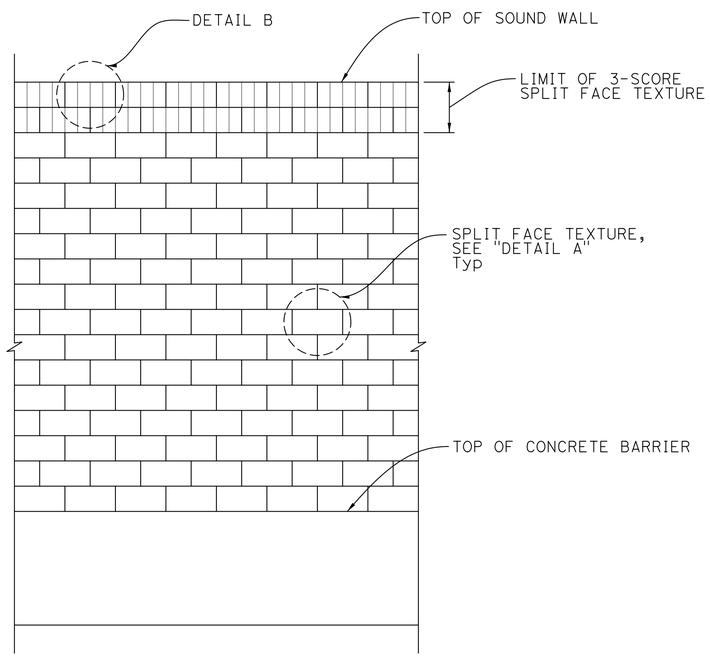

PART ELEVATION
NO SCALE

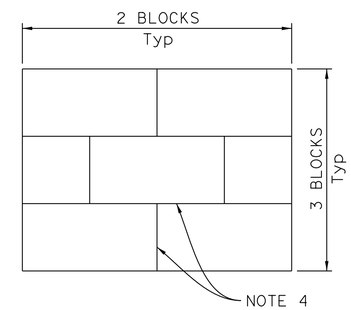

TYPICAL CONCRETE PANEL
NO SCALE

NOTES:

1. Block size shall be 8" x 8" x 1'-4".
2. Concrete panel shall be SoundSorb panel.
3. Block and concrete panel color shall match existing sound walls nearby.
4. Concrete panel shall simulate block horizontal and vertical joints.

Luqi Yang
DESIGN OVERSIGHT — Luqi Yang
5-15-13
SIGN OFF DATE

	BY	CHECKED
DESIGN	J. Quinoveva	C. Weber
DETAILS	H. Withers	C. Weber
QUANTITIES	J. Quinoveva	D. Kim

PREPARED FOR THE STATE OF CALIFORNIA DEPARTMENT OF TRANSPORTATION

Mohan S. Char
PROJECT ENGINEER

BRIDGE NO. 55E0151
POST MILES 5.26

RETAINING WALL NO. 287L
SOUND WALL DETAILS

DESIGN DETAIL SHEET (ENGLISH) (REV.7/16/10)

ORIGINAL SCALE IN INCHES FOR REDUCED PLANS 0 1 2 3

UNIT:
PROJECT NUMBER & PHASE: 1200020278 CONTRACT NO.: 12-0F96C1

DISREGARD PRINTS BEARING EARLIER REVISION DATES

REVISION DATES: 09-24-12 01-14-13 04-22-13

SHEET 10 OF 11

FILE => RW287L-g-rwdt06.dgn

USERNAME => s124496 DATE PLOTTED => 29-AUG-2013 TIME PLOTTED => 09:08

DIST	COUNTY	ROUTE	POST MILES TOTAL PROJECT	SHEET No	TOTAL SHEETS
12	Ora	5	3.7/6.2	717	780

REGISTERED ENGINEER — 4/22/13 DATE

8-26-13
PLANS APPROVAL DATE

REGISTERED PROFESSIONAL ENGINEER — A. KORKOS NO. GE 2357 EXP. 3-31-14 GEOTECHNICAL — STATE OF CALIFORNIA

The State of California or its officers or agents shall not be responsible for the accuracy or completeness of electronic copies of this plan sheet.

ORANGE COUNTY TRANSPORTATION AUTHORITY
550 SOUTH MAIN STREET
ORANGE, CA 92863-1584

EARTH MECHANICS, INC.
17800 NEWHOPE STREET, SUITE B
FOUNTAIN VALLEY, CA 92708

BENCH MARK

DESIGNATION: 3SS-2-82 ELEV 95.558′

DESCRIBED BY OCS 2003 - FOUND 3¾" OCS ALUMINUM BENCH MARK DISK STAMPED "3SS-2-82", SET IN THE SOUTHEASTERLY CORNER OF A 4 FT. BY 4.5 FT. CONCRETE CATCH BASIN. MONUMENT IS LOCATED ALONG THE NORTHWESTERLY SIDE OF AVENIDA VAQUERO, 100 FT. NORTHERLY OF THE NORTHERLY EDGE OF THE SAN DIEGO FREEWAY OVERCROSSING OF AVENIDA VAQUERO, 23 FT. WESTERLY OF THE CENTERLINE OF VAQUERO AND 29.2 FT. SOUTHERLY OF A STREET STANDARD NO NUMBER. MONUMENT IS SET LEVEL WITH THE TOP OF THE CURB.

NOTES:

(1) This LOTB sheet was prepared in accordance with the Caltrans Soil and Rock Logging, Classification and Presentation Manual (June 2010).

(2) 2.4" samples were taken using a California Modified Sampler.

(3) An automatic trip hammer system consisting of a hammer weight of 140 lbs falling a distance of 30" was used to advance the drive sampler.

(4) Conversion factor from 2.4" Modified California Ring Sampler blowcounts to Standard Penetration Test (SPT) blowcounts is 0.5.

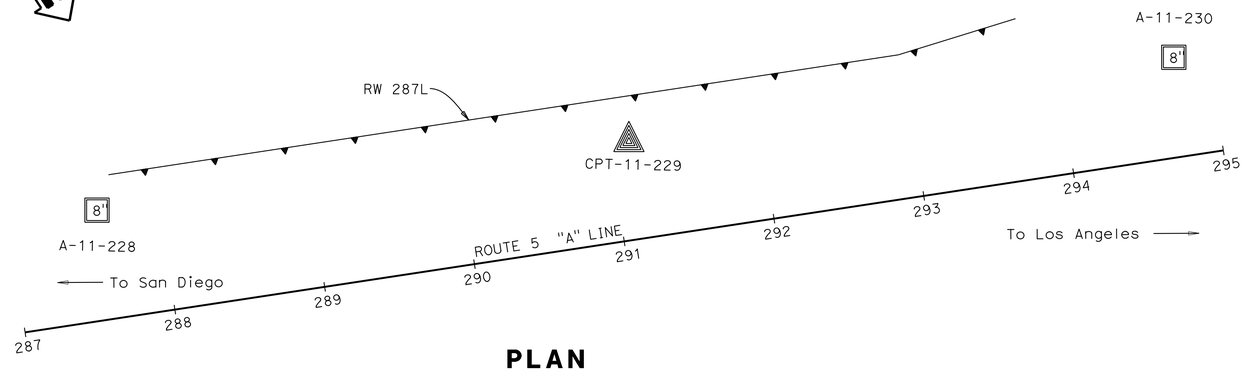

PLAN

1" = 50′

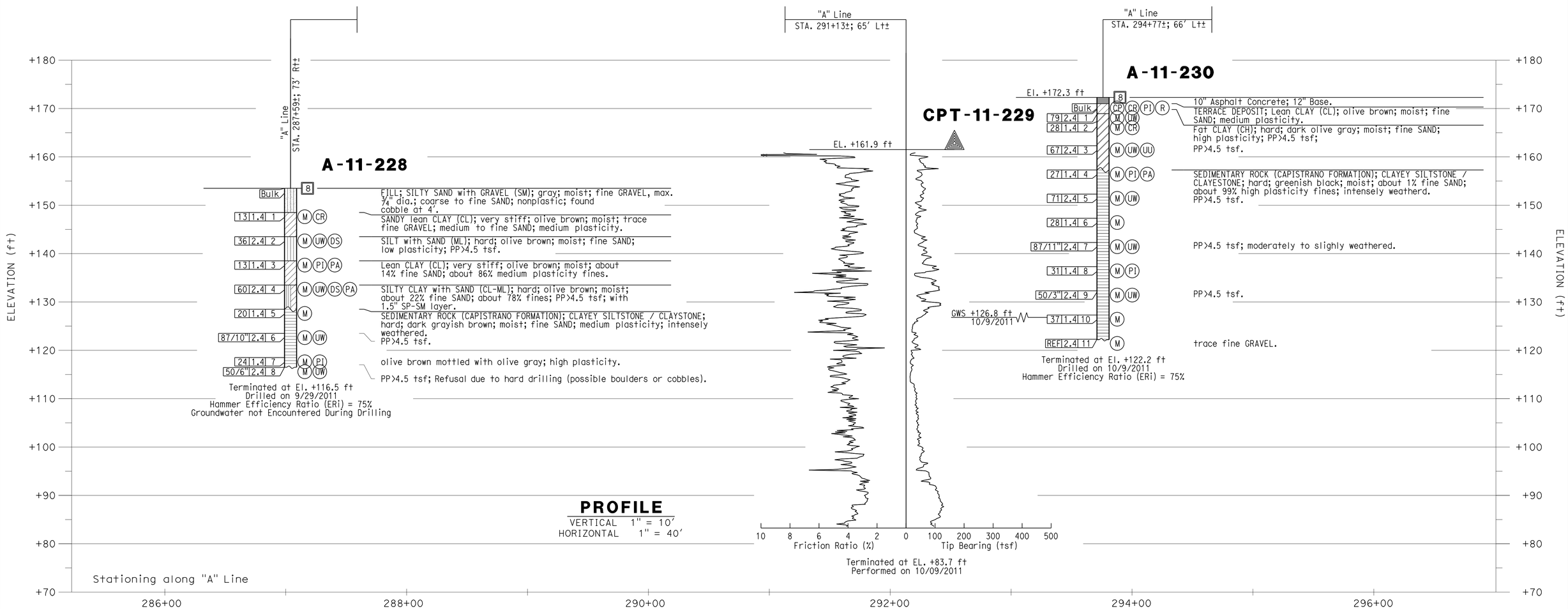

PROFILE

VERTICAL 1" = 10′
HORIZONTAL 1" = 40′

Luqi Yang — DESIGN OVERSIGHT Luqi Yang; 5-15-13 SIGN OFF DATE	DRAWN BY	J. FANG	R. JIE — FIELD INVESTIGATION BY:	PREPARED FOR THE STATE OF CALIFORNIA DEPARTMENT OF TRANSPORTATION	A. KORKOS — PROJECT ENGINEER	BRIDGE NO. 55E0151	RETAINING WALL NO. 287L
	CHECKED BY	G. J. GUNARANJAN	DATE: 9/2011, 10/2011			POST MILES 5.26	LOG OF TEST BORINGS

GS GEOTECHNICAL LOG OF TEST BORINGS SHEET (ENGLISH) (REV. 7/16/10)

ORIGINAL SCALE IN INCHES FOR REDUCED PLANS 0 1 2 3

UNIT:
PROJECT NUMBER & PHASE: 12000202781

DISREGARD PRINTS BEARING EARLIER REVISION DATES — REVISION DATES 04-27-12 09-24-12 01-14-13 04-22-13

SHEET 11 OF 11

FILE => RW287L-z-lotb1.dgn

CONTRACT NO.:12-0F96C1 PROJECT ID:1200020278

USERNAME => s124296 DATE PLOTTED => 29-AUG-2013 TIME PLOTTED => 09:08

DIST	COUNTY	ROUTE	POST MILES TOTAL PROJECT	SHEET No	TOTAL SHEETS
12	Ora	5	3.7/6.2	718	780

REGISTERED CIVIL ENGINEER — 4/22/13 DATE

8-26-13
PLANS APPROVAL DATE

REGISTERED PROFESSIONAL ENGINEER — MOHAN S. CHAR No. 57894 Exp. 6/30/14 CIVIL — STATE OF CALIFORNIA

The State of California or its officers or agents shall not be responsible for the accuracy or completeness of electronic copies of this plan sheet.

ORANGE COUNTY TRANSPORTATION AUTHORITY
550 SOUTH MAIN STREET
ORANGE, CA 92863-1584

AECOM TECHNICAL SERVICES INC.
999 W. TOWN & COUNTRY ROAD
ORANGE, CALIFORNIA 92868

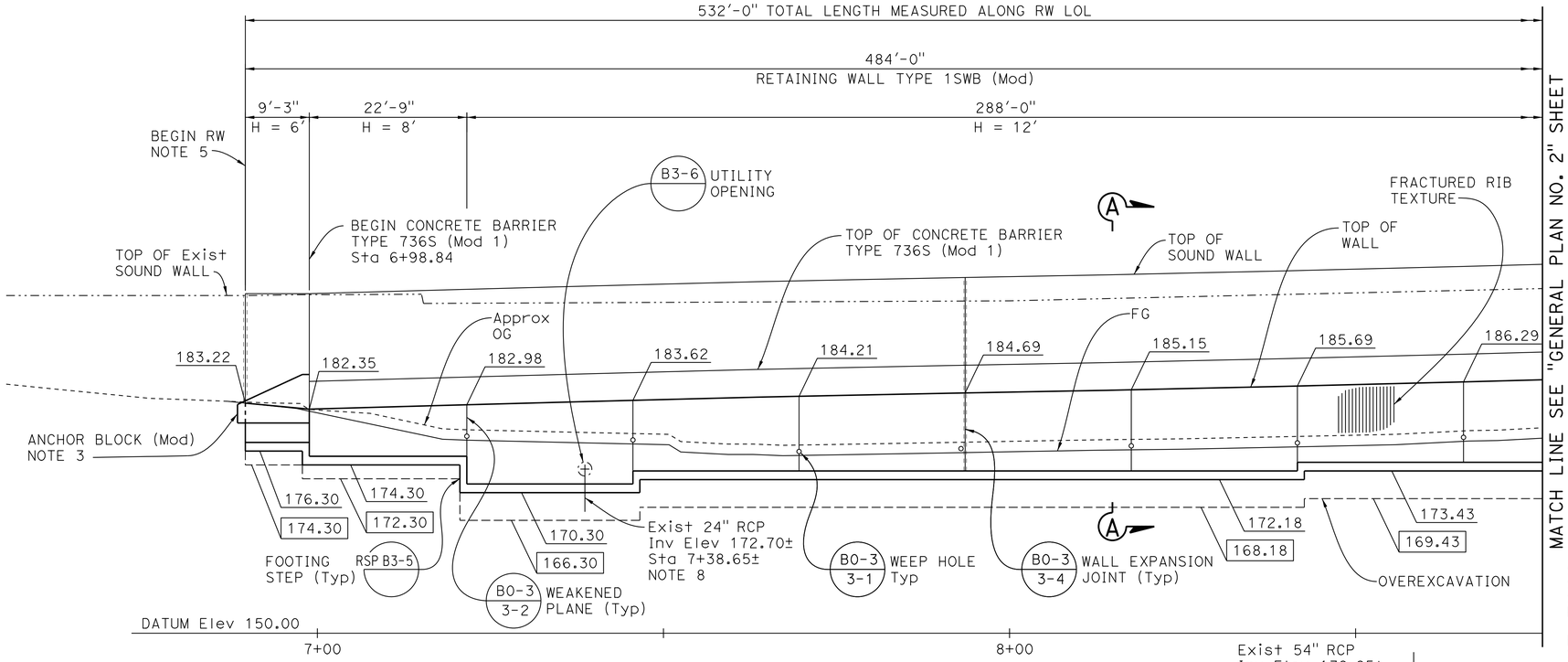

DEVELOPED MIRROR ELEVATION

1" = 10'

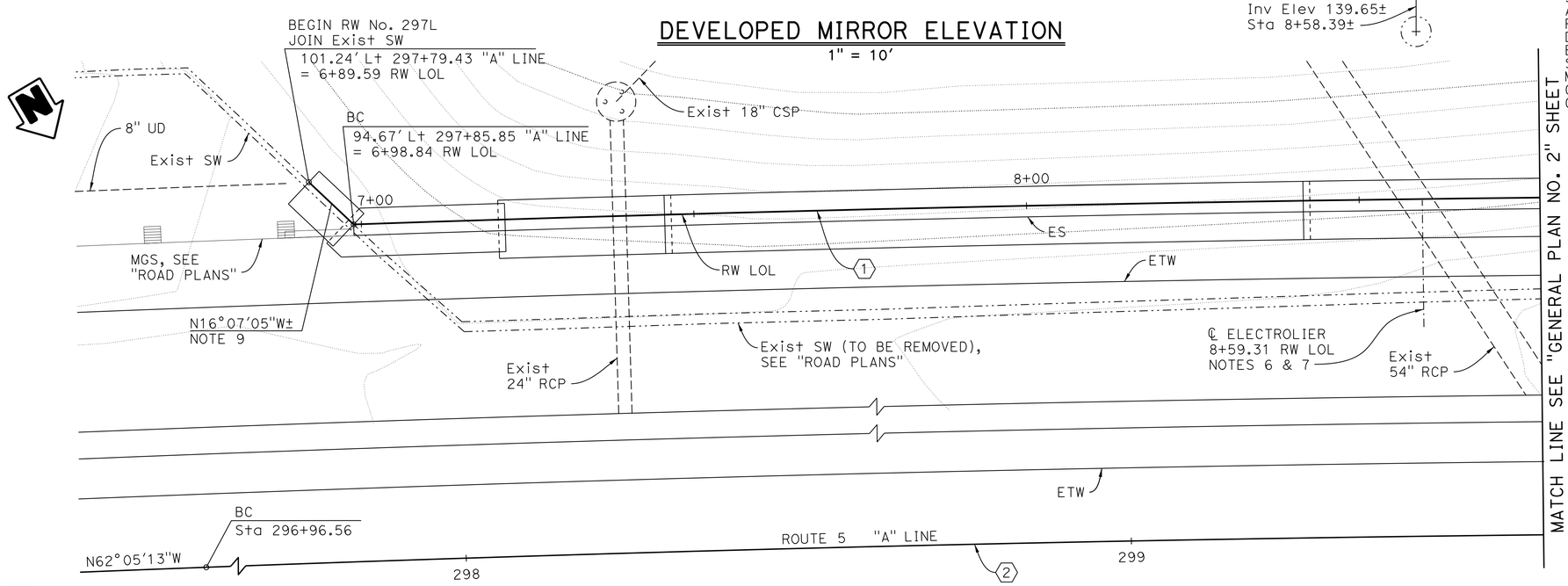

PLAN

1" = 10'

NOTE:
THE CONTRACTOR SHALL VERIFY ALL CONTROLLING FIELD DIMENSIONS BEFORE ORDERING OR FABRICATING ANY MATERIAL.

CURVE DATA				
No.	R	Δ	L	T
1	7594.90'	3°56'37"	522.75'	261.48'
2	7500.00'	8°38'28"	1131.13'	566.64'

RETAINING WALL NO. 297L

QUANTITIES

STRUCTURE EXCAVATION (RETAINING WALL)	2,300	CY
STRUCTURE BACKFILL (SLURRY CEMENT)	3	CY
STRUCTURE BACKFILL (RETAINING WALL)	2,020	CY
PERVIOUS BACKFILL MATERIAL (RETAINING WALL)	74	CY
18" CAST-IN-DRILLED-HOLE CONCRETE	69	LF
PILING (SOUND WALL)		
STRUCTURAL CONCRETE, RETAINING WALL	467	CY
ARCHITECTURAL TREATMENT (CONCRETE PANEL)	6,620	SQFT
FRACTURED RIB TEXTURE	3,510	SQFT
DRILL AND BOND DOWEL (CHEMICAL ADHESIVE)	61	EA
BAR REINFORCING STEEL (RETAINING WALL)	64,600	LB
SOUND WALL (MASONRY BLOCK)	6,850	SQFT
MISCELLANEOUS METAL	355	LB
CONCRETE BARRIER (TYPE 736S MODIFIED 2)	48	LF
CONCRETE BARRIER (TYPE 736S MODIFIED 1)	475	LF

NOTES:

1. All wall expansion joints, weakened planes and footing steps occur at intervals of 24'-0" unless shown otherwise.
2. For "INDEX TO PLANS" and "LEGEND", see "INDEX TO PLANS" sheet.
3. For "ANCHOR BLOCK (MOD)" AND "CORNER DETAIL", see "INDEX TO PLANS" sheet.
4. For "SECTION A-A", see "GENERAL PLAN NO. 2" sheet.
5. Top of sound wall to match top of exist sound wall.
6. For electrolier pedestal details, see RSP B11-56
7. For electrolier opening in sound wall details, see "ELECTROLIER OPENING DETAILS" sheet.
8. Pothole to verify location and depth prior to construction of footing.
9. Match existing sound wall alignment.

Luqi Yang — DESIGN OVERSIGHT — Luqi Yang — 5-15-13 — SIGN OFF DATE	DESIGN	BY J. Quinoveva	CHECKED C. Weber	LOAD & RESISTANCE FACTOR DESIGN	LIVE LOADING: HL93 W/"LOW-BOY"; PERMIT DESIGN VEHICLE	
	DETAILS	BY J. Quinoveva	CHECKED C. Weber	LAYOUT	BY J. Quinoveva	CHECKED C. Weber
	QUANTITIES	BY J. Quinoveva	CHECKED D. Kim	SPECIFICATIONS	BY M. Char	PLANS AND SPECS COMPARED M. Char

PREPARED FOR THE STATE OF CALIFORNIA DEPARTMENT OF TRANSPORTATION

Mohan S. Char — PROJECT ENGINEER

BRIDGE NO. 55E0152 — POST MILES 5.44

RETAINING WALL NO. 297L
GENERAL PLAN NO. 1

DESIGN GENERAL PLAN SHEET (ENGLISH) (REV.7/16/10)

ORIGINAL SCALE IN INCHES FOR REDUCED PLANS 0 1 2 3

UNIT:
PROJECT NUMBER & PHASE: 1200020278 CONTRACT NO.: 12-0F96C1

DISREGARD PRINTS BEARING EARLIER REVISION DATES

REVISION DATES: 04-27-12 09-24-12 01-14-13 04-22-13 — SHEET 1 OF 11

FILE => RW297L-a-gp01.dgn

USERNAME => s124496 DATE PLOTTED => 29-AUG-2013 TIME PLOTTED => 09:08

DIST	COUNTY	ROUTE	POST MILES TOTAL PROJECT	SHEET No	TOTAL SHEETS
12	Ora	5	3.7/6.2	719	780

REGISTERED CIVIL ENGINEER — 4/22/13 DATE

8-26-13
PLANS APPROVAL DATE

REGISTERED PROFESSIONAL ENGINEER — MOHAN S. CHAR — No. 57894 — Exp. 6/30/14 — CIVIL — STATE OF CALIFORNIA

The State of California or its officers or agents shall not be responsible for the accuracy or completeness of electronic copies of this plan sheet.

ORANGE COUNTY TRANSPORTATION AUTHORITY
550 SOUTH MAIN STREET
ORANGE, CA 92863-1584

AECOM TECHNICAL SERVICES INC.
999 W. TOWN & COUNTRY ROAD
ORANGE, CALIFORNIA 92868

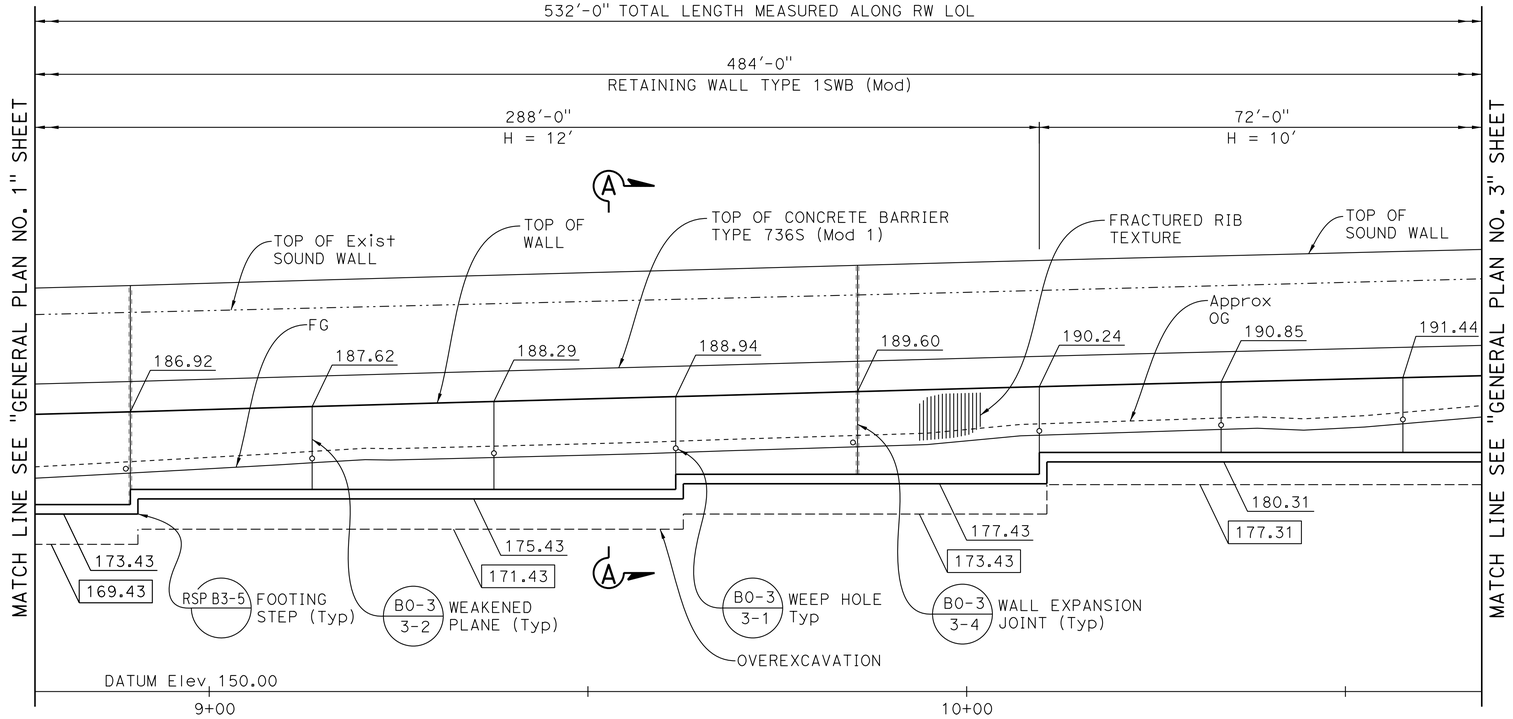

DEVELOPED MIRROR ELEVATION

1" = 10'

CURVE DATA				
No.	R	Δ	L	T
1	7594.90'	3°56'37"	522.75'	261.48'
2	7500.00'	8°38'28"	1131.13'	566.64'

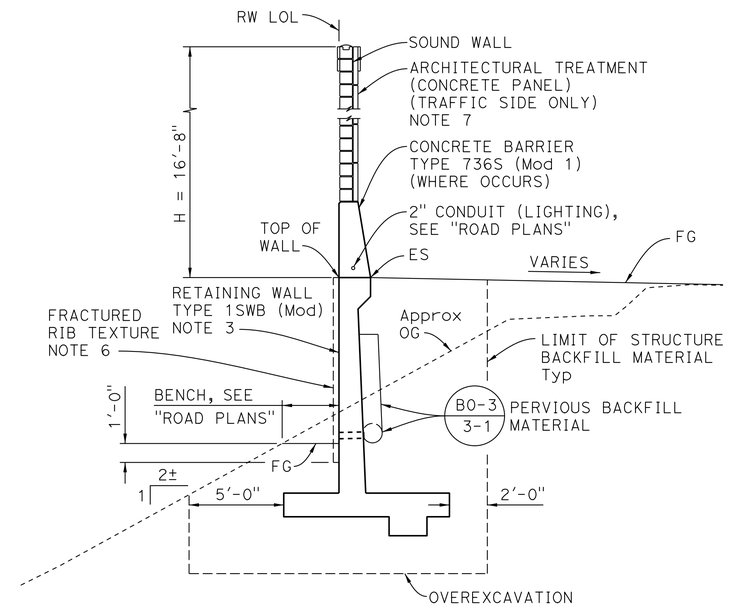

SECTION A-A

¼" = 1'-0"

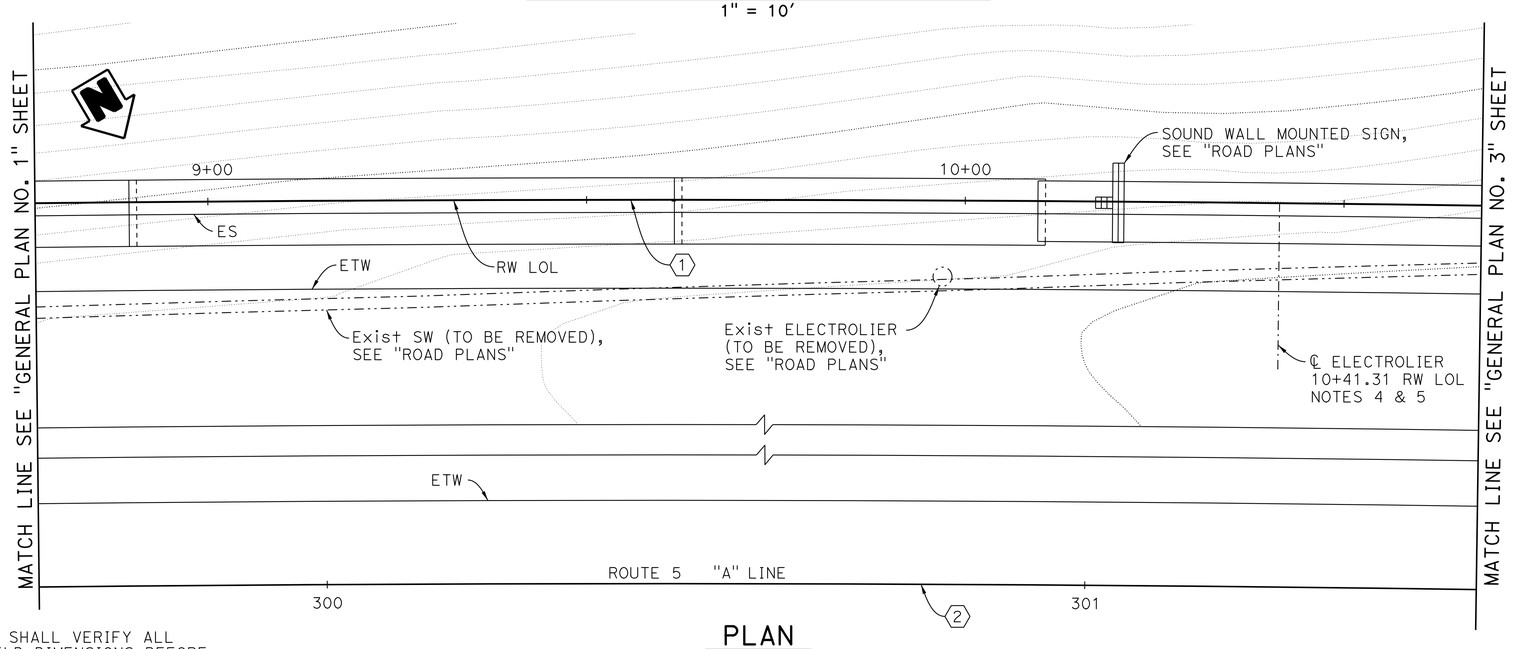

PLAN

1" = 10'

NOTES:

1. All wall expansion joints, weakened planes and footing steps occur at intervals of 24'-0" unless shown otherwise.
2. For "INDEX TO PLANS" and "LEGEND", see "INDEX TO PLANS" sheet.
3. For Retaining Wall Type 1SWB (Mod) details, see "RETAINING WALL TYPE 1SWB (MOD)-DETAILS NO. 1" sheet.
4. For electrolier pedestal details, see RSP B11-56.
5. For electrolier opening in sound wall details, see "ELECTROLIER OPENING DETAILS" sheet.
6. For "FRACTURED RIB TEXTURE", see "INDEX TO PLANS" sheet.
7. For architectural treatment details, see "SOUND WALL DETAILS" sheet.

NOTE:
THE CONTRACTOR SHALL VERIFY ALL CONTROLLING FIELD DIMENSIONS BEFORE ORDERING OR FABRICATING ANY MATERIAL.

Luqi Yang
DESIGN OVERSIGHT — Luqi Yang
5-15-13
SIGN OFF DATE

	BY	CHECKED
DESIGN	J. Quinoveva	C. Weber
DETAILS	J. Quinoveva	C. Weber
QUANTITIES	J. Quinoveva	D. Kim

LOAD & RESISTANCE FACTOR DESIGN — LIVE LOADING: HL93 W/"LOW-BOY"; PERMIT DESIGN VEHICLE
LAYOUT — BY J. Quinoveva — CHECKED C. Weber
SPECIFICATIONS — BY M. Char — PLANS AND SPECS COMPARED M. Char

PREPARED FOR THE STATE OF CALIFORNIA DEPARTMENT OF TRANSPORTATION

Mohan S. Char
PROJECT ENGINEER

BRIDGE NO. 55E0152
POST MILES 5.44

RETAINING WALL NO. 297L
GENERAL PLAN NO. 2

DESIGN GENERAL PLAN SHEET (ENGLISH) (REV.7/16/10)

ORIGINAL SCALE IN INCHES FOR REDUCED PLANS 0 1 2 3

UNIT:
PROJECT NUMBER & PHASE: 1200020278
CONTRACT NO.: 12-0F96C1

DISREGARD PRINTS BEARING EARLIER REVISION DATES
REVISION DATES: 04-21-12 09-24-12 01-14-13 04-22-13
SHEET 2 OF 11

FILE => RW297L-a-gp02.dgn

USERNAME => s124496 DATE PLOTTED => 29-AUG-2013 TIME PLOTTED => 09:08

DIST	COUNTY	ROUTE	POST MILES TOTAL PROJECT	SHEET No	TOTAL SHEETS
12	Ora	5	3.7/6.2	720	780

REGISTERED CIVIL ENGINEER 4/22/13 DATE

8-26-13
PLANS APPROVAL DATE

REGISTERED PROFESSIONAL ENGINEER MOHAN S. CHAR No. 57894 Exp. 6/30/14 CIVIL STATE OF CALIFORNIA

The State of California or its officers or agents shall not be responsible for the accuracy or completeness of electronic copies of this plan sheet.

ORANGE COUNTY TRANSPORTATION AUTHORITY
550 SOUTH MAIN STREET
ORANGE, CA 92863-1584

AECOM TECHNICAL SERVICES INC.
999 W. TOWN & COUNTRY ROAD
ORANGE, CALIFORNIA 92868

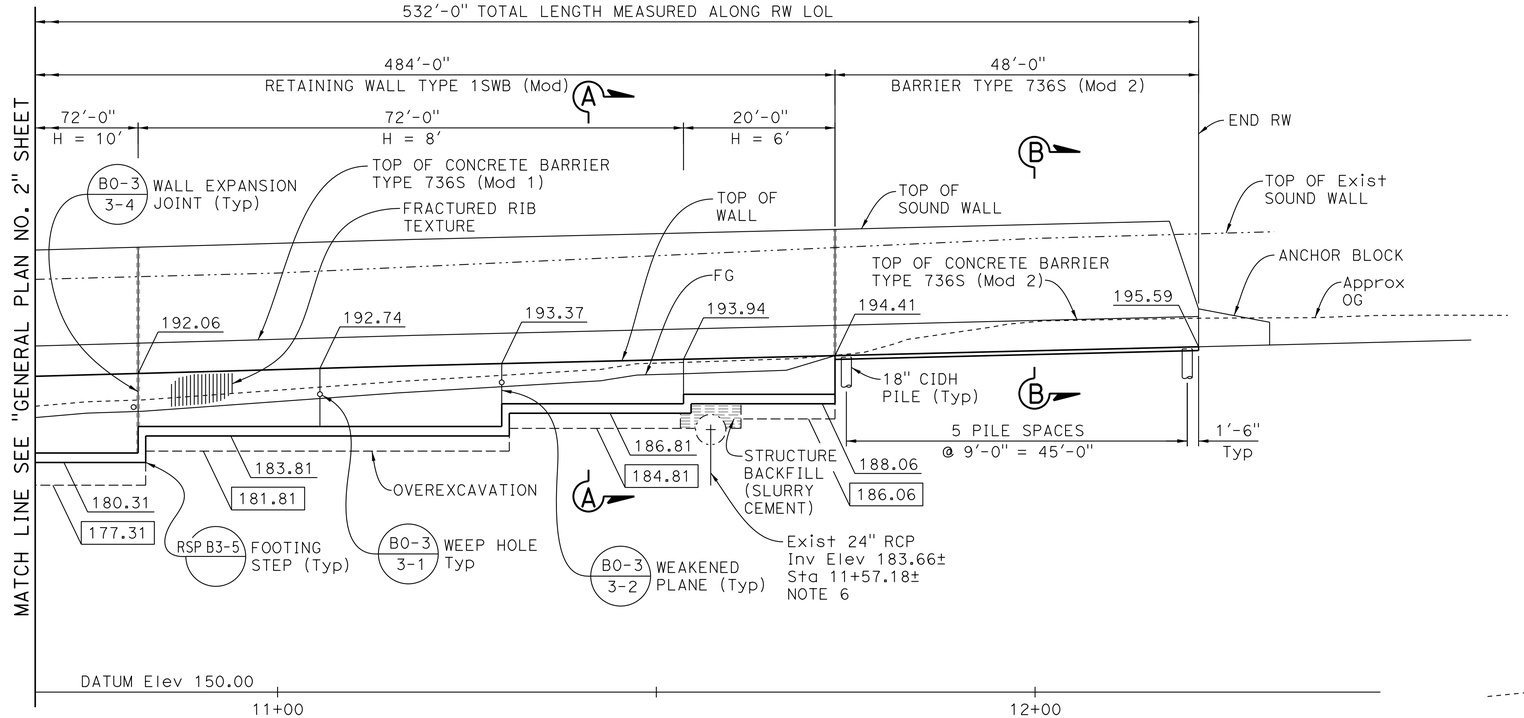

DEVELOPED MIRROR ELEVATION
1" = 10'

CURVE DATA				
No.	R	Δ	L	T
1	7594.90'	3°56'37"	522.75'	261.48'
2	7500.00'	8°38'28"	1131.13'	566.64'

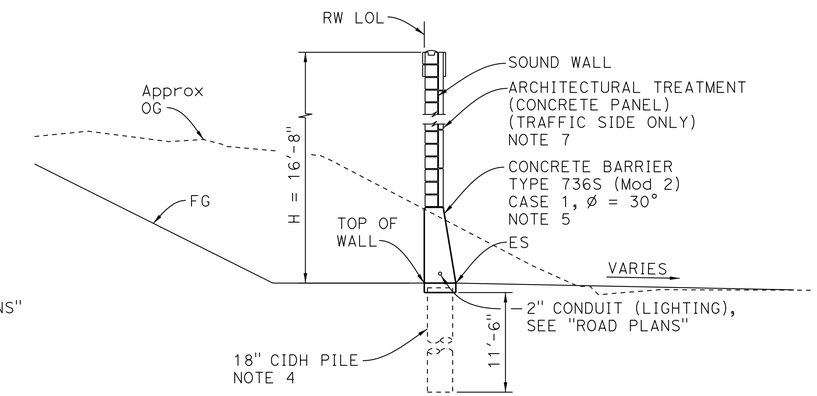

SECTION B-B
¼" = 1'-0"

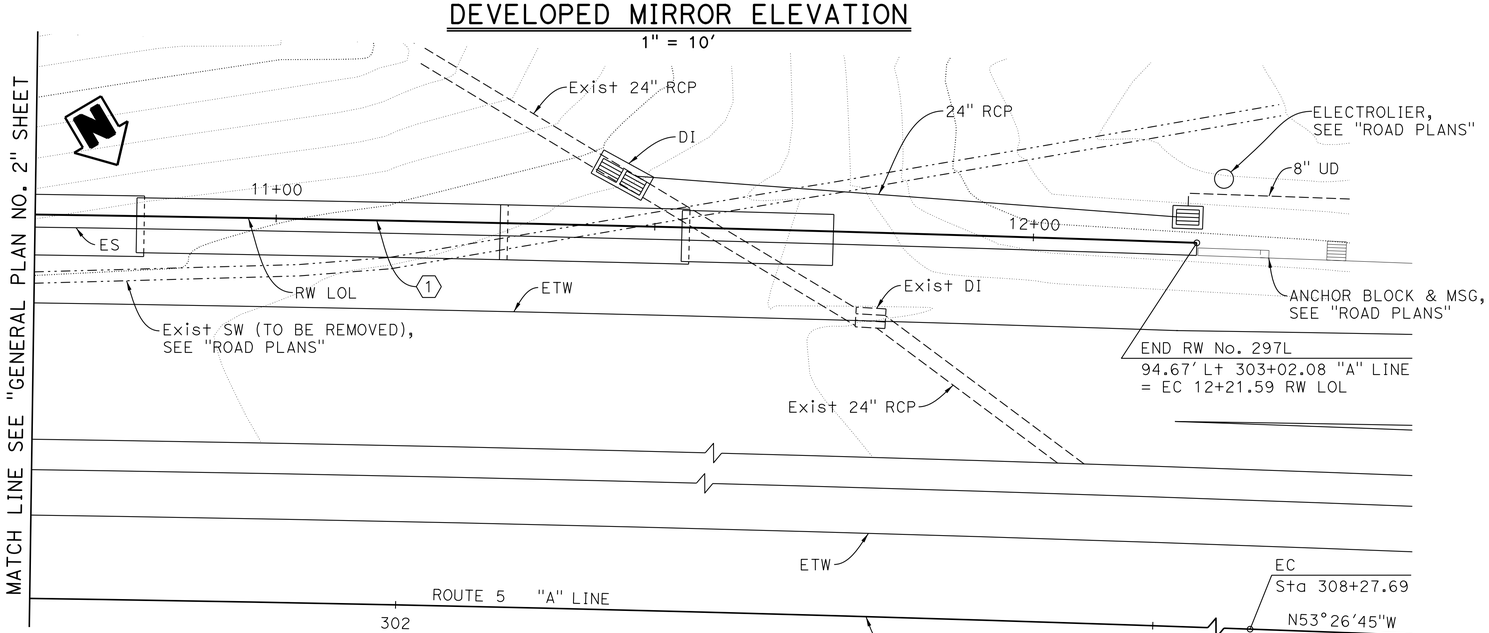

PLAN
1" = 10'

NOTES:
1. All wall expansion joints, weakened planes and footing steps occur at intervals of 24'-0" unless shown otherwise.
2. For "INDEX TO PLANS" and "LEGEND", see "INDEX TO PLANS" sheet.
3. For "SECTION A-A", see "GENERAL PLAN NO. 2" sheet.
4. For pile details, see "ROAD PLANS".
5. For Concrete Barrier Type 736S (Mod 2) details, see "ROAD PLANS".
6. Pothole to verify location and depth prior to construction of footing.
7. For architectural treatment details, see "SOUND WALL DETAILS" sheet.

NOTE:
THE CONTRACTOR SHALL VERIFY ALL CONTROLLING FIELD DIMENSIONS BEFORE ORDERING OR FABRICATING ANY MATERIAL.

DESIGN OVERSIGHT Luqi Yang 5-15-13 SIGN OFF DATE	DESIGN	BY J. Quinoveva	CHECKED C. Weber	LOAD & RESISTANCE FACTOR DESIGN — LIVE LOADING: HL93 W/"LOW-BOY"; PERMIT DESIGN VEHICLE
	DETAILS	BY J. Quinoveva	CHECKED C. Weber	LAYOUT BY J. Quinoveva — CHECKED C. Weber
	QUANTITIES	BY J. Quinoveva	CHECKED D. Kim	SPECIFICATIONS BY M. Char — PLANS AND SPECS COMPARED M. Char

PREPARED FOR THE STATE OF CALIFORNIA DEPARTMENT OF TRANSPORTATION

Mohan S. Char
PROJECT ENGINEER

BRIDGE NO. 55E0152
POST MILES 5.44

RETAINING WALL NO. 297L
GENERAL PLAN NO. 3

DESIGN GENERAL PLAN SHEET (ENGLISH) (REV.7/16/10)

ORIGINAL SCALE IN INCHES FOR REDUCED PLANS 0 1 2 3

UNIT:
PROJECT NUMBER & PHASE: 1200020278 CONTRACT NO.: 12-0F96C1

DISREGARD PRINTS BEARING EARLIER REVISION DATES

REVISION DATES: 04-27-12 09-24-12 01-14-13 04-22-13

SHEET 3 OF 11

FILE => RW297L-a-gp03.dgn

USERNAME => s124496 DATE PLOTTED => 29-AUG-2013 TIME PLOTTED => 09:08

DIST	COUNTY	ROUTE	POST MILES TOTAL PROJECT	SHEET No	TOTAL SHEETS
12	Ora	5	3.7/6.2	721	780

REGISTERED CIVIL ENGINEER — DATE 4/22/13

8-26-13
PLANS APPROVAL DATE

REGISTERED PROFESSIONAL ENGINEER — MOHAN S. CHAR — No. 57894 — Exp. 6/30/14 — CIVIL — STATE OF CALIFORNIA

The State of California or its officers or agents shall not be responsible for the accuracy or completeness of electronic copies of this plan sheet.

ORANGE COUNTY TRANSPORTATION AUTHORITY
550 SOUTH MAIN STREET
ORANGE, CA 92863-1584

AECOM TECHNICAL SERVICES INC.
999 W. TOWN & COUNTRY ROAD
ORANGE, CALIFORNIA 92868

INDEX TO PLANS

No.	Title
1	GENERAL PLAN NO. 1
2	GENERAL PLAN NO. 2
3	GENERAL PLAN NO. 3
4	INDEX TO PLANS
5	RETAINING WALL TYPE 1SWB (MOD)-DETAILS NO. 1
6	RETAINING WALL TYPE 1SWB (MOD)-DETAILS NO. 2
7	MASONRY BLOCK SOUND WALL WITH BARRIER ON RETAINING WALL-DETAILS NO. 1
8	MASONRY BLOCK SOUND WALL WITH BARRIER ON RETAINING WALL-DETAILS NO. 2
9	ELECTROLIER OPENING DETAILS
10	SOUND WALL DETAILS
11	LOG OF TEST BORINGS

STANDARD PLANS 2010 EDITION

	A10A	ABBREVIATIONS (SHEET 1 OF 2)
	A10B	ABBREVIATIONS (SHEET 2 OF 2)
	A10C	LINES AND SYMBOLS (SHEET 1 OF 3)
	A10D	LINES AND SYMBOLS (SHEET 2 OF 3)
	A10E	LINES AND SYMBOLS (SHEET 3 OF 3)
	A10F	LEGEND - SOIL (SHEET 1 OF 2)
	A10G	LEGEND - SOIL (SHEET 2 OF 2)
	A10H	LEGEND - ROCK
	A62B	LIMITS OF PAYMENT FOR EXCAVATION AND BACKFILL - BRIDGE SURCHARGE AND WALL
	A77J3	METAL BEAM GUARD RAILING CONNECTIONS TO ABUTMENTS AND WALLS
	B0-3	BRIDGE DETAILS
RSP	B3-5	RETAINING WALL DETAILS NO. 1
	B3-6	RETAINING WALL DETAILS NO. 2
RSP	B11-56	CONCRETE BARRIER TYPE 736
RSP	B15-6	SOUND WALL MASONRY BLOCK ON TYPE 736S/SV BARRIER DETAILS (1)
	B15-9	SOUND WALL MASONRY BLOCK MISCELLANEOUS DETAILS

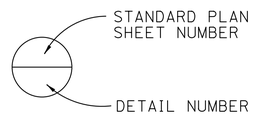

LEGEND

Denotes top of wall elevation (feet)

Denotes bottom of footing elevation (feet)

Denotes bottom of overexcavation (feet)

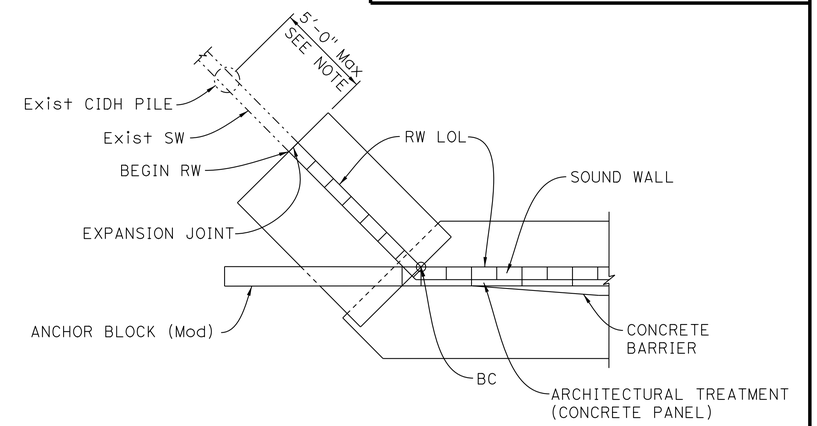

CORNER DETAIL

1/4" = 1'-0"

NOTE:
The location of existing piles shall be field verified. Beginning of retaining wall may be adjusted as needed to satisfy pile spacing requirement.

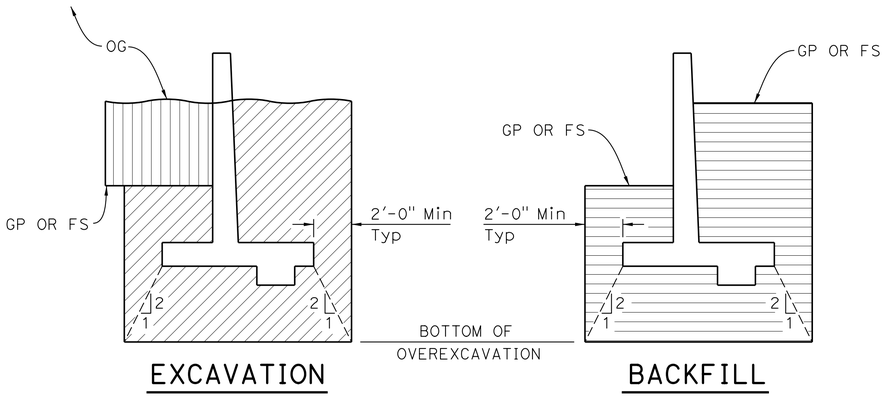

LIMITS OF PAYMENT FOR EXCAVATION AND BACKFILL

NO SCALE

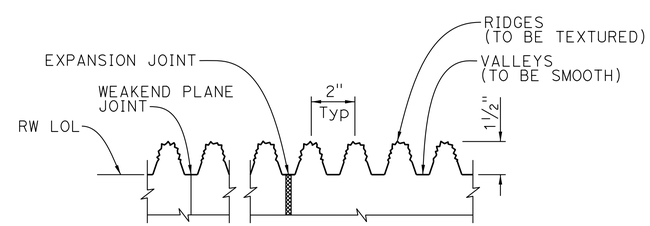

FRACTURED RIB TEXTURE

NO SCALE

NOTE:
Weakened Plane and Expansion Joints to be centered in valleys.

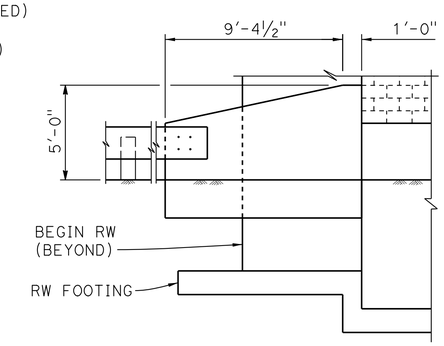

ANCHOR BLOCK (MOD)

1/4" = 1'-0"

NOTE:
For details not shown, see "MASONRY BLOCK SOUND WALL WITH BARRIER ON RETAINING WALL DETAILS NO. 2" sheet.

NOTE:
THE CONTRACTOR SHALL VERIFY ALL CONTROLLING FIELD DIMENSIONS BEFORE ORDERING OR FABRICATING ANY MATERIAL.

DESIGN OVERSIGHT Luqi Yang — 5-15-13 — SIGN OFF DATE

	BY	CHECKED				
DESIGN	J. Quinoveva	C. Weber	LOAD & RESISTANCE FACTOR DESIGN	LIVE LOADING: HL93 W/"LOW-BOY"; PERMIT DESIGN VEHICLE		
DETAILS	H. Withers	C. Weber	LAYOUT	J. Quinoveva	C. Weber	
QUANTITIES	J. Quinoveva	D. Kim	SPECIFICATIONS	M. Char	PLANS AND SPECS COMPARED M. Char	

PREPARED FOR THE STATE OF CALIFORNIA DEPARTMENT OF TRANSPORTATION

Mohan S. Char — PROJECT ENGINEER

BRIDGE NO. 55E0152 — POST MILES 5.44

RETAINING WALL NO. 297L
INDEX TO PLANS

DESIGN GENERAL PLAN SHEET (ENGLISH) (REV.7/16/10)

ORIGINAL SCALE IN INCHES FOR REDUCED PLANS 0 1 2 3

UNIT:
PROJECT NUMBER & PHASE: 1200020278 — CONTRACT NO.: 12-0F96C1

DISREGARD PRINTS BEARING EARLIER REVISION DATES — REVISION DATES 04-27-12 09-24-12 01-14-13 04-22-13 — SHEET 4 OF 11

FILE => RW297L-a-itp01.dgn

USERNAME => s124496 DATE PLOTTED => 29-AUG-2013 TIME PLOTTED => 09:28

DIST	COUNTY	ROUTE	POST MILES TOTAL PROJECT	SHEET No	TOTAL SHEETS
12	Ora	5	3.7/6.2	722	780

REGISTERED CIVIL ENGINEER — DATE 4/22/13

8-26-13
PLANS APPROVAL DATE

REGISTERED PROFESSIONAL ENGINEER — MOHAN S. CHAR — No. 57894 — Exp. 6/30/14 — CIVIL — STATE OF CALIFORNIA

The State of California or its officers or agents shall not be responsible for the accuracy or completeness of electronic copies of this plan sheet.

ORANGE COUNTY TRANSPORTATION AUTHORITY
550 SOUTH MAIN STREET
ORANGE, CA 92863-1584

AECOM TECHNICAL SERVICES INC.
999 W. TOWN & COUNTRY ROAD
ORANGE, CALIFORNIA 92868

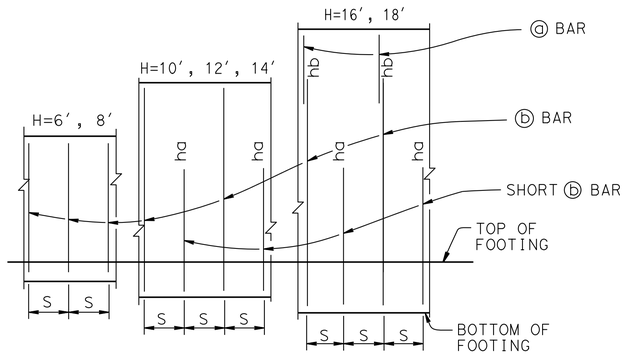

ELEVATION
No Scale

NOTES:
"ha" and "hb" above ⓑ bars indicate distance from top of footing to upper end of ⓑ bars, see table.
"S" is ⓑ bar spacing, see table.

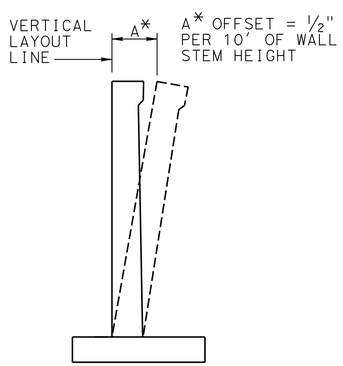

WALL OFFSET
No Scale

Values for offsetting forms to be determined by the Engineer

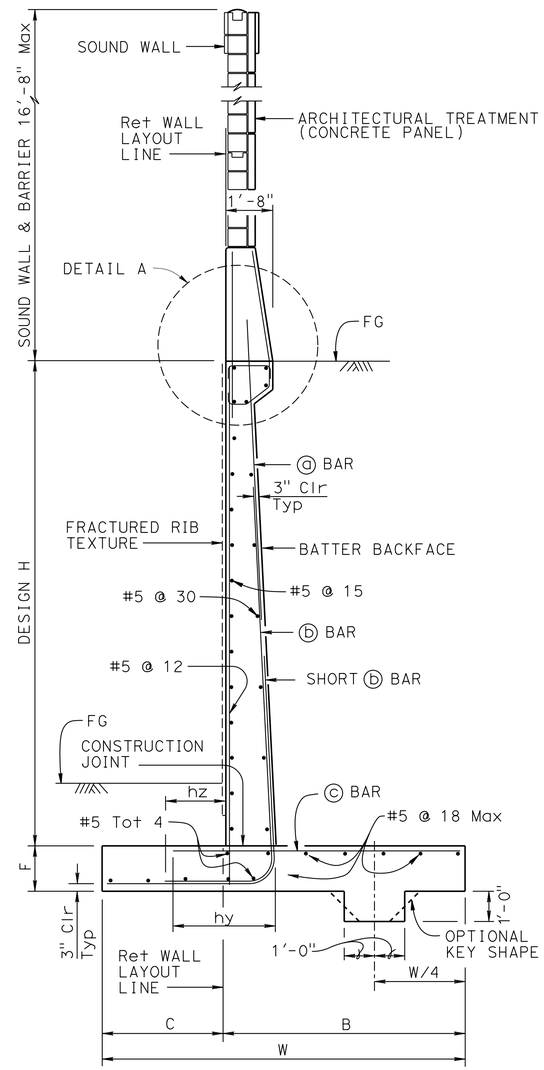

SPREAD FOOTING SECTION
No Scale

DESIGN DATA

Design: AASHTO LRFD Bridge Design Specifications, 4th edition with California Amendments

WS: 33 psf on Sound Wall and Barrier

LS: Varied surcharge on level ground surface

CT: 54 kip maximum traffic impact loading evenly distributed over 10 feet at top of the barrier and 1:1 distribution down and outward

EQE: Trial Wedge Method
$K_h = 0.2$
$K_v = 0.0$

Soil: $\phi = 34°$
$\gamma = 120$ pcf

Reinforced Concrete: $f'c = 3600$ psi
$fy = 60{,}000$ psi

Load Combinations and Limit States

Service I	Q=1.00DC+1.00EV+1.00EH+1.00LS+0.30WS
Service II	Q=1.00DC+1.00EV+1.00EH+1.00WS
Strength I	Q=aDC+βEV+1.50EH+1.75LS
Strength III	Q=aDC+βEV+1.50EH+1.40WS
Strength V	Q=aDC+βEV+1.50EH+1.35LS+0.40WS
Extreme I	Q=1.00DC+1.00EV+1.00EH+1.00EQD+1.00EQE
Extreme II	Q=1.00DC+1.00EV+1.00EH+1.00CT

Where:
Q: Force Effects
a: 1.25 or 0.90, Which ever Controls Design
B: 1.35 or 1.00, which ever Controls Design
DC: Dead Load of Structure Components
EV: Vertical Earth Fill Pressure
LS: Live Load Surcharge
EQE: Seismic Earth Pressure
EQD: Soil and Structure Components Inertia. Soil inertia ignored for stem design
WS: Wind Load on Sound Wall and Barrier
CT: Vehicular Collision Force

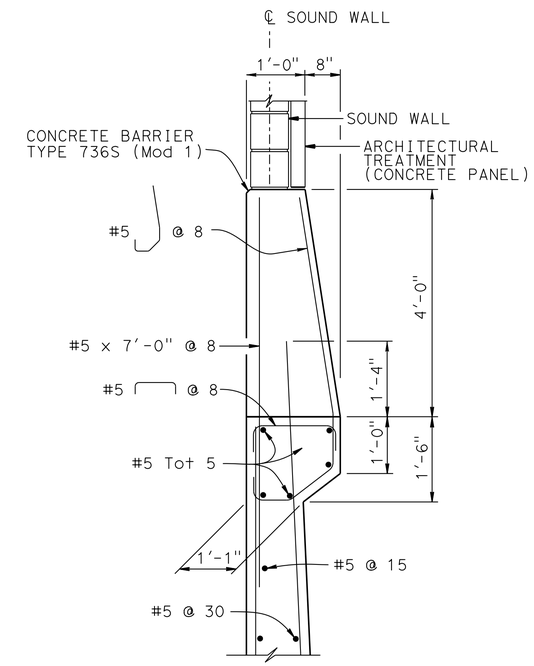

DETAIL A
3/4 = 1′-0″

NOTES:

1. For retaining wall fractured rib texture, see "INDEX TO PLANS" sheet and for sound wall aesthetics, see "SOUND WALL DETAILS" sheet.
2. For details not shown and drainage notes see RSP B3-5
3. Footing cover, 1′-6″ minimum.
4. For sound wall and barrier reinforcement details, see "MASONRY BLOCK SOUND WALL WITH BARRIER ON RETAINING WALL-DETAILS NO. 1" sheet.
5. For H = 6′ through 14′, extend ⓑ bars into Barrier for stem with haunch.
6. For H ≥ 16′, extend ⓐ bars into Barrier for stem with haunch.

Luqi Yang
DESIGN OVERSIGHT — Luqi Yang
5-15-13
SIGN OFF DATE

	BY	CHECKED
DESIGN	L. He	J. Leimberger
DETAILS	H. Withers	C. Weber
QUANTITIES	J. Quinoveva	D. Kim

PREPARED FOR THE STATE OF CALIFORNIA DEPARTMENT OF TRANSPORTATION

Mohan S. Char
PROJECT ENGINEER

BRIDGE NO. 55E0152
POST MILES 5.44

RETAINING WALL NO. 297L
RETAINING WALL TYPE 1SWB (MOD)-DETAILS NO. 1

DESIGN DETAIL SHEET (ENGLISH) (REV.7/16/10)

ORIGINAL SCALE IN INCHES FOR REDUCED PLANS 0 1 2 3

UNIT:
PROJECT NUMBER & PHASE: 1200020278
CONTRACT NO.: 12-0F96C1

DISREGARD PRINTS BEARING EARLIER REVISION DATES — REVISION DATES 01-14-13 04-22-13 — SHEET 5 OF 11

FILE => RW297L-g-rwdt01.dgn

USERNAME => s124496 DATE PLOTTED => 29-AUG-2013 TIME PLOTTED => 09:28

DIST	COUNTY	ROUTE	POST MILES TOTAL PROJECT	SHEET No	TOTAL SHEETS
12	Ora	5	3.7/6.2	723	780

REGISTERED CIVIL ENGINEER — DATE 4/22/13

8-26-13
PLANS APPROVAL DATE

REGISTERED PROFESSIONAL ENGINEER — MOHAN S. CHAR — No. 57894 — Exp. 6/30/14 — CIVIL — STATE OF CALIFORNIA

The State of California or its officers or agents shall not be responsible for the accuracy or completeness of electronic copies of this plan sheet.

ORANGE COUNTY TRANSPORTATION AUTHORITY
550 SOUTH MAIN STREET
ORANGE, CA 92863-1584

AECOM TECHNICAL SERVICES INC.
999 W. TOWN & COUNTRY ROAD
ORANGE, CALIFORNIA 92868

TABLE OF REINFORCING STEEL DIMENSIONS AND DATA

DESIGN H	6′	8′	10′	12′	14′	16′	18′
W	6′-9″	7′-3″	8′-0″	8′-9″	10′-0″	11′-6″	12′-9″
C	2′-3″	2′-5″	2′-8″	2′-11″	3′-4″	3′-10″	4′-3″
B	4′-6″	4′-10″	5′-4″	5′-10″	6′-8″	7′-8″	8′-6″
F SPREAD FOOTING	1′-3″	1′-3″	1′-3″	1′-3″	1′-6″	1′-9″	1′-9″
STEM WITH HAUNCH, BATTER	0	½:12	½:12	½:12	½:12	½:12	½:12
ⓐ BARS						#7 @ 15	#7 @ 12
ⓑ BARS	#8 @ 12	#8 @ 12	#7 @ 6	#7 @ 6	#7 @ 6	#9 @ 7.5	#9 @ 6
ha			5′-0″	6′-0″	7′-0″	7′-0″	6′-0″
hb						11′-6″	12′-0″
hy	2′-0″	2′-4″	1′-8″	2′-0″	2′-4″	2′-10″	2′-10″
hz					3′-6″	4′-0″	4′-6″
ⓒ BARS	#6 @ 12	#7 @ 12	#5 @ 6	#6 @ 6	#7 @ 6	#8 @ 7.5	#8 @ 6
SER I: B′(ft), q_0'(ksf)	5.3, 1.0	5.8, 1.3	6.5, 1.5	7.2, 1.7	8.4, 1.8	9.9, 1.9	11.2, 2.0
STR Ia: B′(ft), q_0(ksf)	5.8, 1.8	6.2, 2.1	6.7, 2.4	7.2, 2.7	8.3, 3.0	9.7, 3.1	10.9, 3.3
STR, Ib: B′(ft), q_0(ksf)	4.7, 1.4	4.5, 1.8	4.6, 2.2	4.7, 2.6	5.7, 2.8	7.1, 2.8	8.3, 2.9
STR, IIIa: B′(ft), q_0(ksf)	4.3, 2.2	5.0, 2.4	5.7, 2.6	6.3, 2.8	7.5, 3.0	9.1, 3.1	10.4, 3.3
STR, IIIb: B′(ft), q_0(ksf)	3.4, 2.1	3.9, 2.2	4.5, 2.5	5.0, 2.7	6.1, 2.8	7.6, 2.8	8.7, 2.9
STR, Va: B′(ft), q_0(ksf)	5.3, 1.8	5.8, 2.1	6.4, 2.4	6.9, 2.7	8.0, 2.9	9.4, 3.1	10.6, 3.3
STR, Vb: B′(ft), q_0(ksf)	4.3, 1.5	4.2, 1.9	4.5, 2.2	4.7, 2.6	5.7, 2.8	7.1, 2.8	8.3, 2.9
Ext I: B′(ft), q_0(ksf)	4.1, 1.8	3.9, 2.2	3.7, 2.8	3.4, 3.6	3.8, 4.2	4.5, 4.5	5.0, 5.0
Ext II: B′(ft), q_0(ksf)	1.7, 4.3	2.7, 3.1	3.8, 2.8	5.2, 2.5	6.9, 2.4	8.8, 2.4	10.3, 2.4

LEGEND:
SER: service limit state
STR: strength limit state
EXT: extreme event limit state
B′ : effective footing width (ft)
q_0' : net bearing stress (ksf)

q_0 : gross uniform bearing stress (ksf)

Luqi Yang
DESIGN OVERSIGHT — Luqi Yang
5-15-13
SIGN OFF DATE

	BY	CHECKED
DESIGN	L. He	J. Leimberger
DETAILS	H. Withers	C. Weber
QUANTITIES	J. Quinoveva	D. Kim

PREPARED FOR THE STATE OF CALIFORNIA DEPARTMENT OF TRANSPORTATION

Mohan S. Char
PROJECT ENGINEER

BRIDGE NO. 55E0152
POST MILES 5.44

RETAINING WALL NO. 297L
RETAINING WALL TYPE 1SWB (MOD)-DETAILS NO. 2

DESIGN DETAIL SHEET (ENGLISH) (REV.7/16/10)

ORIGINAL SCALE IN INCHES FOR REDUCED PLANS 0 1 2 3

UNIT:
PROJECT NUMBER & PHASE: 1200020278 CONTRACT NO.: 12-0F96C1

DISREGARD PRINTS BEARING EARLIER REVISION DATES

REVISION DATES: 01-14-13 04-22-13

SHEET 6 OF 11

FILE => RW297L-g-rwdt02.dgn

USERNAME => s124496 DATE PLOTTED => 29-AUG-2013 TIME PLOTTED => 09:28

DIST	COUNTY	ROUTE	POST MILES TOTAL PROJECT	SHEET No	TOTAL SHEETS
12	Ora	5	3.7/6.2	724	780

REGISTERED CIVIL ENGINEER 4/22/13 DATE

8-26-13
PLANS APPROVAL DATE

REGISTERED PROFESSIONAL ENGINEER MOHAN S. CHAR No. 57894 Exp. 6/30/14 CIVIL STATE OF CALIFORNIA

The State of California or its officers or agents shall not be responsible for the accuracy or completeness of electronic copies of this plan sheet.

ORANGE COUNTY TRANSPORTATION AUTHORITY
550 SOUTH MAIN STREET
ORANGE, CA 92863-1584

AECOM TECHNICAL SERVICES INC.
999 W. TOWN & COUNTRY ROAD
ORANGE, CALIFORNIA 92868

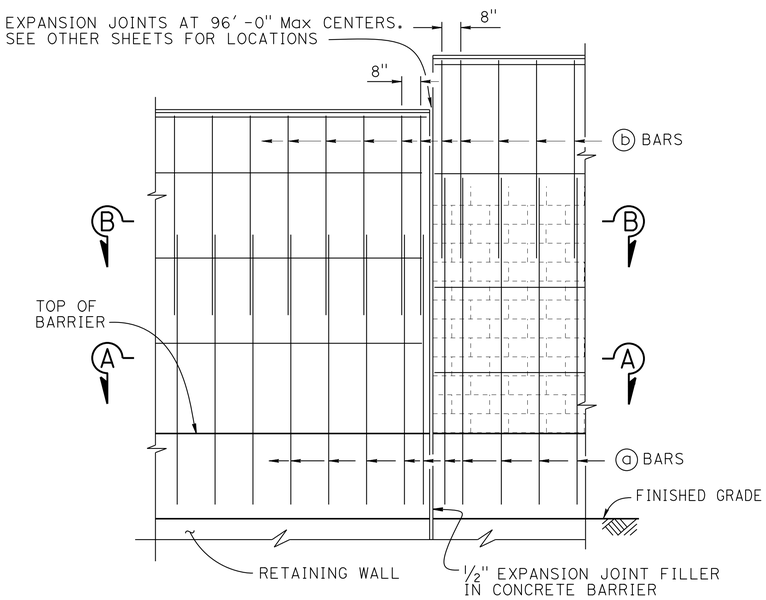

PART ELEVATION
No Scale

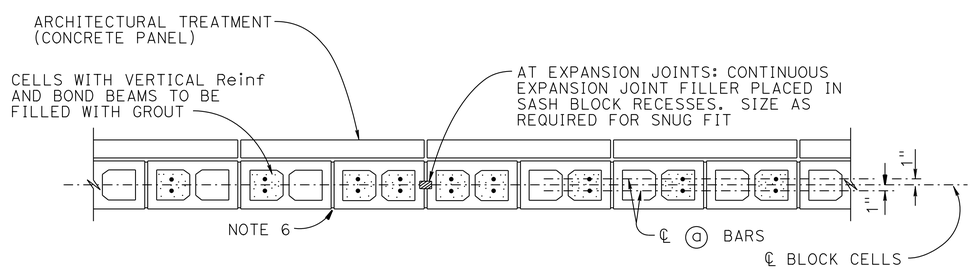

SECTION A-A
No Scale

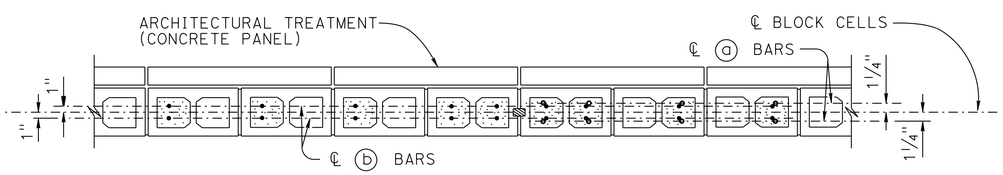

SECTION B-B
No Scale

SOUND WALL REINFORCEMENT TABLE

MAXIMUM "H"	ⓐ BARS @ 1'-4" Max	ⓑ BARS @ 1'-4" Max	"Y"	f'm (psi)	COMPRESSIVE STRENGTH OF CMU (psi)	MAXIMUM "H"
14'-8"	#6	#4	7'-0"	1500	1900	14'-8"
16'-8"	#6	#4	9'-0"	2500	3700	16'-8"

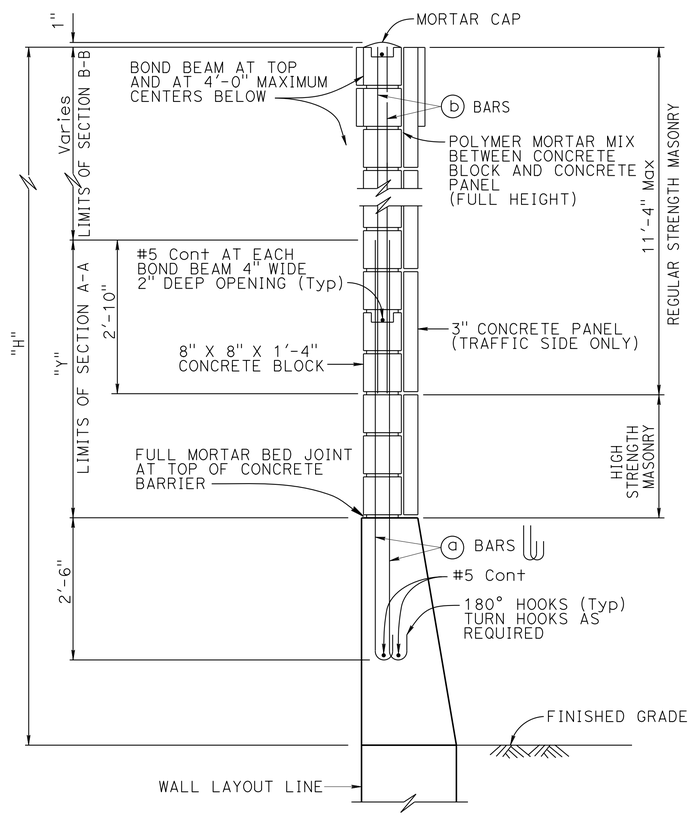

TYPICAL SECTION
No Scale

NOTES:

1. For details not shown, see "MASONRY BLOCK SOUND WALL WITH BARRIER ON RETAINING WALL-DETAILS NO. 2" sheet.
2. Slope ground at traffic side of barrier to drain. Maximum slope ±10%.
3. See STANDARD PLANS B15-9 for other details.
4. For type of block and joint finish, see other sheets.
5. When blocks are laid in stacked bond, ladder type, galvanized joint reinforcement shall be provided. A minimum of 2-9 gauge wire continuous at 4'-0" maximum to be used. Locate reinforcement in joints that are at the approximate midpoint between bond beams.
6. Horizontal joints shall be tooled concave or may be weathered. Vertical joints shall be tooled concave or may be raked.
7. For intermediate wall heights that are between the "H's" given, use the tabular information for the next higher "H".
8. Masonry strengths are listed in "SOUND WALL REINFORCEMENT TABLE".
9. Concrete to be used for the barrier shall contain not less than 590 pounds of cementitious material per cubic yard.

RETAINING WALL NO. 297L

MASONRY BLOCK SOUND WALL WITH BARRIER ON RETAINING WALL

DETAILS NO. 1

Luqi Yang
DESIGN OVERSIGHT Luqi Yang
5-15-13
SIGN OFF DATE

	BY	CHECKED
DESIGN	L. He	J. Leimberger
DETAILS	H. Withers	C. Weber
QUANTITIES	J. Quinoveva	D. Kim

PREPARED FOR THE STATE OF CALIFORNIA DEPARTMENT OF TRANSPORTATION

Mohan S. Char
PROJECT ENGINEER

BRIDGE NO. 55E0152
POST MILES 5.44

DESIGN DETAIL SHEET (ENGLISH) (REV.7/16/10)

ORIGINAL SCALE IN INCHES FOR REDUCED PLANS 0 1 2 3

UNIT:
PROJECT NUMBER & PHASE: 1200020278 CONTRACT NO.: 12-0F96C1

DISREGARD PRINTS BEARING EARLIER REVISION DATES

REVISION DATES 01-14-13 04-22-13

SHEET 7 OF 11

FILE => RW297L-g-rwdt03.dgn

USERNAME => s124496 DATE PLOTTED => 29-AUG-2013 TIME PLOTTED => 09:28

DIST	COUNTY	ROUTE	POST MILES TOTAL PROJECT	SHEET No	TOTAL SHEETS
12	Ora	5	3.7/6.2	725	780

REGISTERED CIVIL ENGINEER 4/22/13 DATE

8-26-13
PLANS APPROVAL DATE

REGISTERED PROFESSIONAL ENGINEER MOHAN S. CHAR No. 57894 Exp. 6/30/14 CIVIL STATE OF CALIFORNIA

The State of California or its officers or agents shall not be responsible for the accuracy or completeness of electronic copies of this plan sheet.

ORANGE COUNTY TRANSPORTATION AUTHORITY
550 SOUTH MAIN STREET
ORANGE, CA 92863-1584

AECOM TECHNICAL SERVICES INC.
999 W. TOWN & COUNTRY ROAD
ORANGE, CALIFORNIA 92868

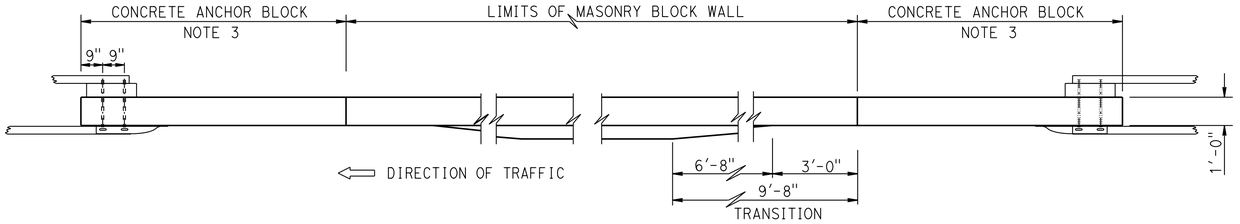

PLAN

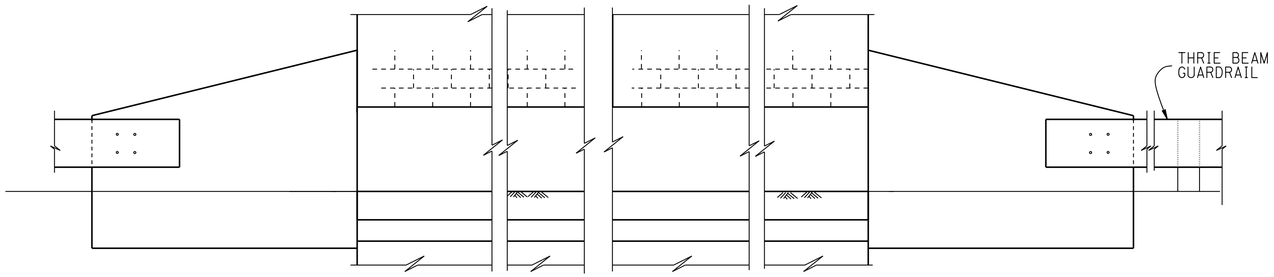

ELEVATION

METAL BEAM GUARDRAIL ANCHORAGE

No Scale

NOTES:

1. For details not shown, see STANDARD PLAN B11-56.
2. Concrete panel not shown for clarity.

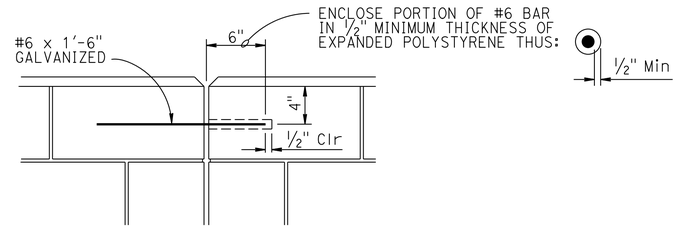

DETAIL A

No Scale

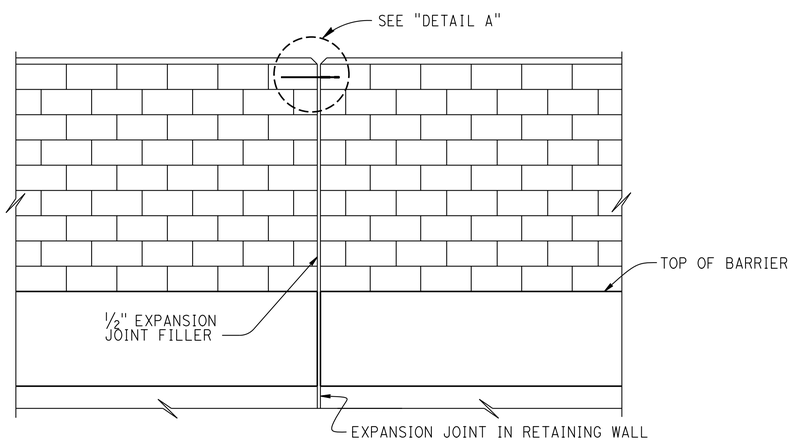

ALIGNMENT KEY DETAIL

No Scale

NOTES:

1. For sound wall block type, see "SOUND WALL DETAILS" sheet.
2. Concrete panel not shown for clarity.

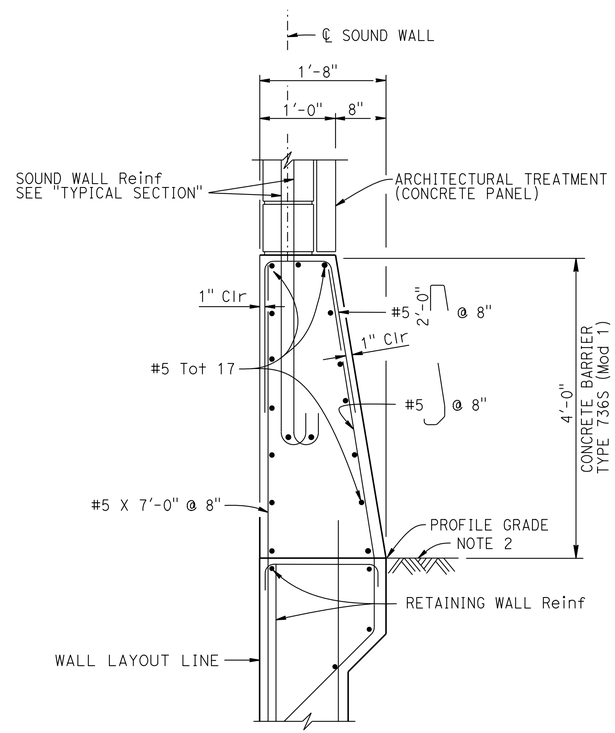

BARRIER SECTION

No Scale

DESIGN NOTES

DESIGN
Uniform Building Code, 1997 Edition and the Bridge Design Specifications

DESIGN WIND LOAD
33 psf

DESIGN SEISMIC LOAD
0.57 Dead load

REINFORCED CONCRETE
f'c = 3600 psi
fy = 60 ksi

CONCRETE MASONRY

REGULAR STRENGTH	HIGH STRENGTH	
f'm = 1500 psi	f'm = 2000 psi	f'm = 2500 psi
fb = 495 psi	fb = 660 psi	fb = 830 psi
fs = 24,000 psi	fs = 24,000 psi	fs = 24,000 psi
n = 25.8	n = 19.3	n = 15.5

NOTES:

1. For details not shown, see STANDARD PLAN B15-6.
2. Slope ground at traffic side of barrier to drain. Maximum slope ±10% See STANDARD PLAN B11-56, Note D.
3. For Concrete Anchor Block and connection details, see "CONNNECTION DETAIL DD" on STANDARD PLAN A77J3

Luqi Yang
DESIGN OVERSIGHT Luqi Yang
5-15-13
SIGN OFF DATE

	BY	CHECKED
DESIGN	L. He	J. Leimberger
DETAILS	H. Withers	C. Weber
QUANTITIES	J. Quinoveva	D. Kim

PREPARED FOR THE STATE OF CALIFORNIA DEPARTMENT OF TRANSPORTATION

Mohan S. Char
PROJECT ENGINEER

BRIDGE NO. 55E0152
POST MILES 5.44

RETAINING WALL NO. 297L

MASONRY BLOCK SOUND WALL WITH BARRIER ON RETAINING WALL

DETAILS NO. 2

DESIGN DETAIL SHEET (ENGLISH) (REV.7/16/10)

ORIGINAL SCALE IN INCHES FOR REDUCED PLANS 0 1 2 3

UNIT:
PROJECT NUMBER & PHASE: 1200020278 CONTRACT NO.: 12-0F96C1

DISREGARD PRINTS BEARING EARLIER REVISION DATES 01-14-13 04-22-13

SHEET 8 OF 11

FILE => RW297L-g-rwdt04.dgn

USERNAME => s124496 DATE PLOTTED => 29-AUG-2013 TIME PLOTTED => 09:28

DIST	COUNTY	ROUTE	POST MILES TOTAL PROJECT	SHEET No	TOTAL SHEETS
12	Ora	5	3.7/6.2	726	780

REGISTERED CIVIL ENGINEER — DATE 4/22/13

8-26-13
PLANS APPROVAL DATE

REGISTERED PROFESSIONAL ENGINEER — MOHAN S. CHAR — No. 57894 — Exp. 6/30/14 — CIVIL — STATE OF CALIFORNIA

The State of California or its officers or agents shall not be responsible for the accuracy or completeness of electronic copies of this plan sheet.

ORANGE COUNTY TRANSPORTATION AUTHORITY
550 SOUTH MAIN STREET
ORANGE, CA 92863-1584

AECOM TECHNICAL SERVICES INC.
999 W. TOWN & COUNTRY ROAD
ORANGE, CALIFORNIA 92868

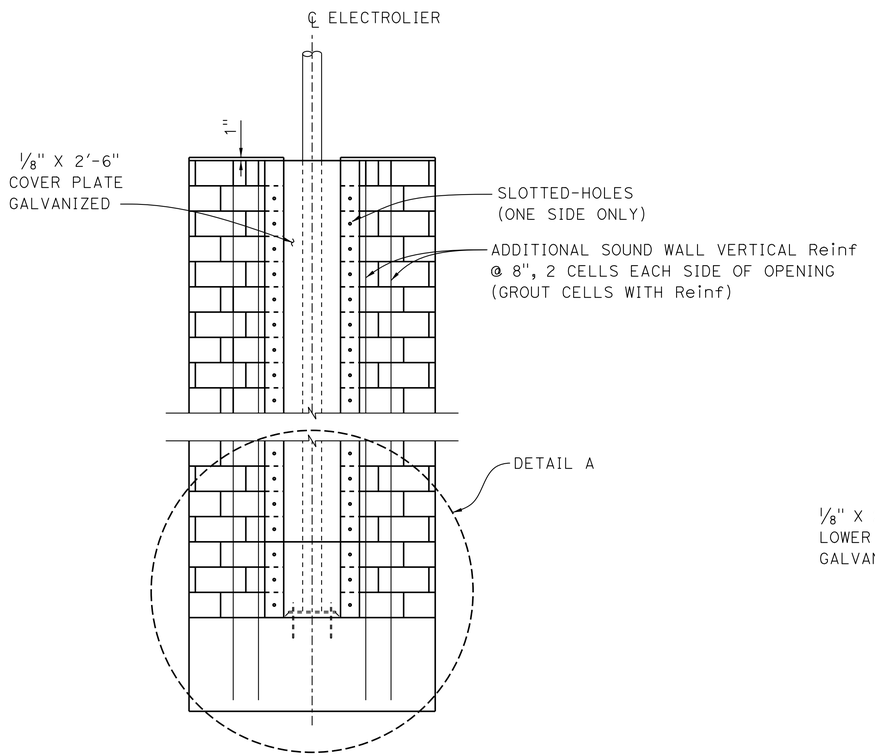

COVER PLATE ELEVATION

1/2" = 1'-0"

NOTE: Concrete panel not shown for clarity.

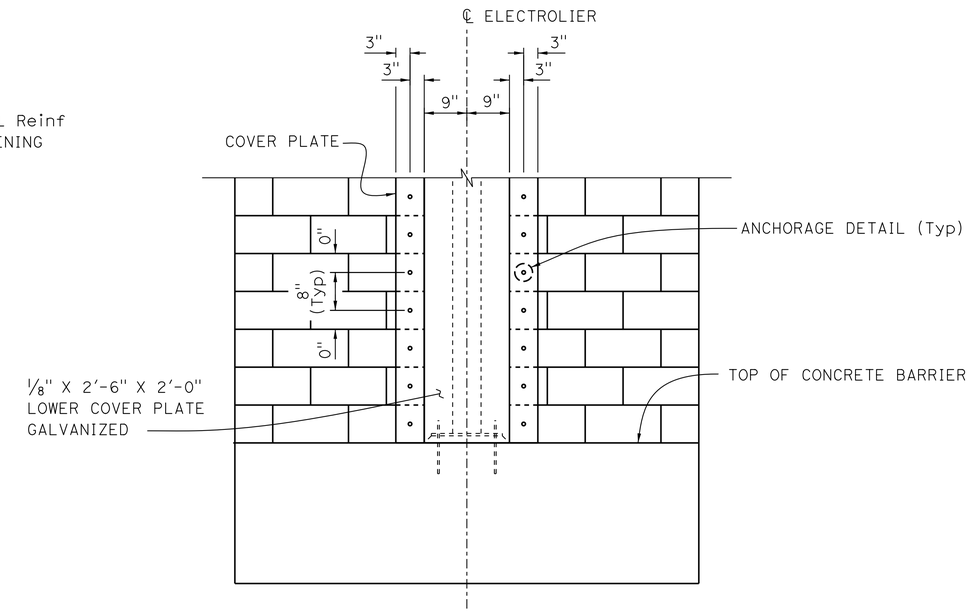

DETAIL A

3/4" = 1'-0"

NOTE: Concrete panel not shown for clarity.

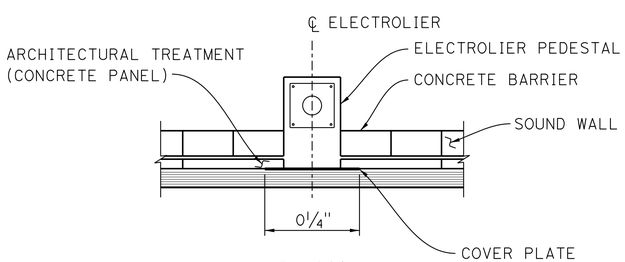

PLAN

1/2" = 1'-0"

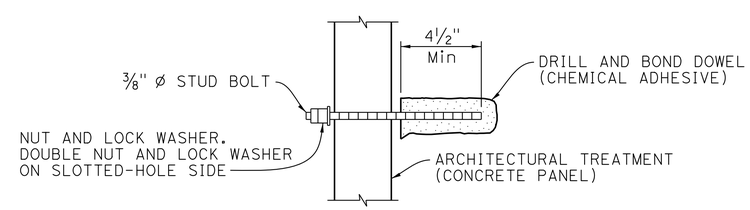

ANCHORAGE DETAIL

3" = 1'-0"

NOTES:

1. Chemical adhesive anchorage is subject to approval by the Engineer. Installation proceedures shall comply with Manufacturer's instructions.
2. Finger tighten nut against washer. Torque outside nut against finger tightened nut.
3. Expansion joints shall not be located within 6' of ℄ Electrolier.
4. For Electrolier location and details, see "ROAD PLANS".
5. For Electrolier pedestal and pull box information not shown, see RSP B11-56

DESIGN OVERSIGHT Luqi Yang
5-15-13
SIGN OFF DATE

	BY	CHECKED
DESIGN	L. He	J. Leimberger
DETAILS	H. Withers	C. Weber
QUANTITIES	J. Quinoveva	D. Kim

PREPARED FOR THE STATE OF CALIFORNIA DEPARTMENT OF TRANSPORTATION

Mohan S. Char
PROJECT ENGINEER

BRIDGE NO. 55E0152
POST MILES 5.44

RETAINING WALL NO. 297L
ELECTROLIER OPENING DETAILS

DESIGN DETAIL SHEET (ENGLISH) (REV.7/16/10)

ORIGINAL SCALE IN INCHES FOR REDUCED PLANS 0 1 2 3

UNIT:
PROJECT NUMBER & PHASE: 1200020278
CONTRACT NO.: 12-0F96C1

DISREGARD PRINTS BEARING EARLIER REVISION DATES

REVISION DATES 01-14-13 04-22-13 — SHEET 9 OF 11

FILE => RW297L-g-rwdt05.dgn

USERNAME => s124496 DATE PLOTTED => 29-AUG-2013 TIME PLOTTED => 09:28

DIST	COUNTY	ROUTE	POST MILES TOTAL PROJECT	SHEET No	TOTAL SHEETS
12	Ora	5	3.7/6.2	727	780

REGISTERED CIVIL ENGINEER — DATE 4/22/13

8-26-13
PLANS APPROVAL DATE

REGISTERED PROFESSIONAL ENGINEER — MOHAN S. CHAR — No. 57894 — Exp. 6/30/14 — CIVIL — STATE OF CALIFORNIA

The State of California or its officers or agents shall not be responsible for the accuracy or completeness of electronic copies of this plan sheet.

ORANGE COUNTY TRANSPORTATION AUTHORITY
550 SOUTH MAIN STREET
ORANGE, CA 92863-1584

AECOM TECHNICAL SERVICES INC.
999 W. TOWN & COUNTRY ROAD
ORANGE, CALIFORNIA 92868

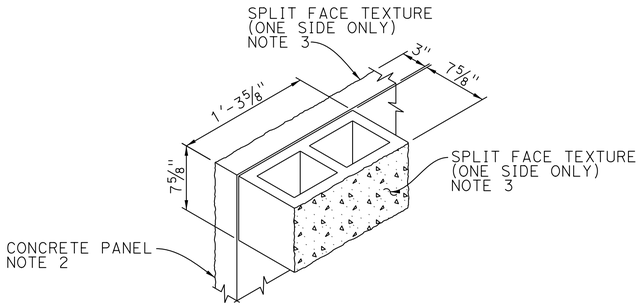

DETAIL A
NO SCALE

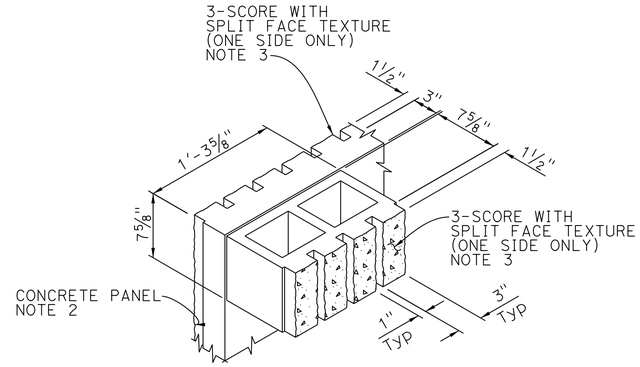

DETAIL B
NO SCALE

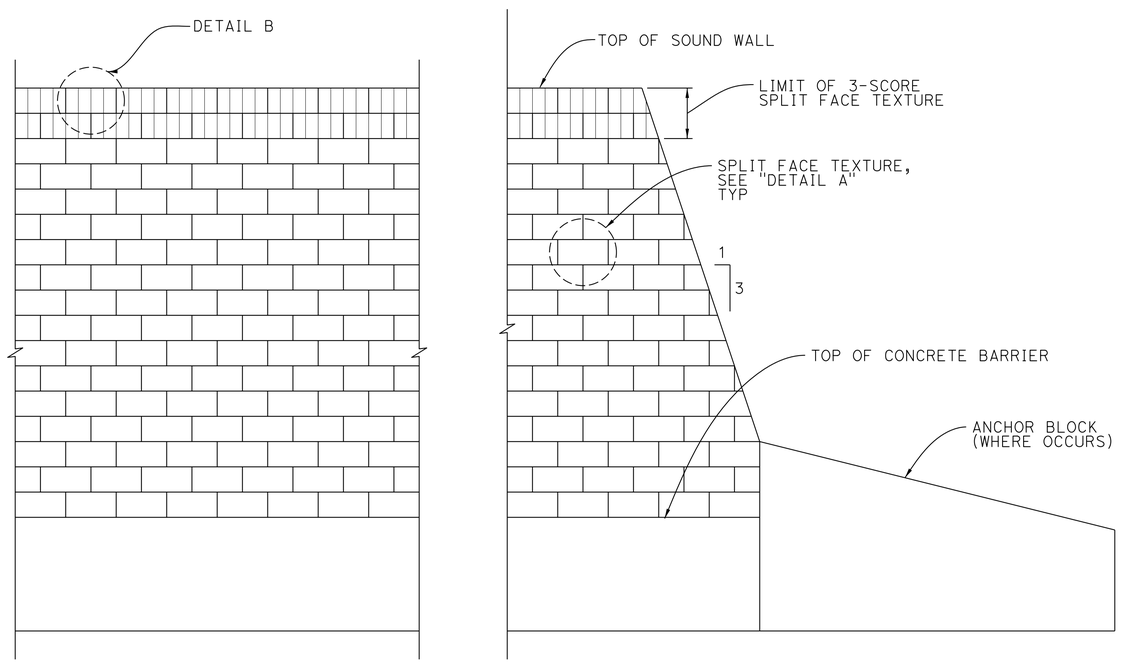

PART ELEVATION
NO SCALE

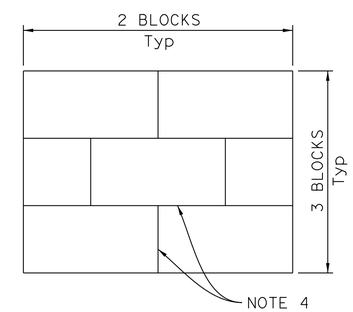

TYPICAL CONCRETE PANEL
NO SCALE

NOTES:

1. Block size shall be 8" x 8" x 1'-4".
2. Concrete panel shall be SoundSorb panel.
3. Block and concrete panel color shall match existing sound walls nearby.
4. Concrete panel shall simulate block horizontal and vertical joints.

DESIGN OVERSIGHT — Luqi Yang
5-15-13
SIGN OFF DATE

	BY	CHECKED
DESIGN	J. Quinoveva	C. Weber
DETAILS	H. Withers	C. Weber
QUANTITIES	J. Quinoveva	D. Kim

PREPARED FOR THE STATE OF CALIFORNIA DEPARTMENT OF TRANSPORTATION

Mohan S. Char
PROJECT ENGINEER

BRIDGE NO. 55E0152
POST MILES 5.44

RETAINING WALL NO. 297L
SOUND WALL DETAILS

DESIGN DETAIL SHEET (ENGLISH) (REV.7/16/10)

ORIGINAL SCALE IN INCHES FOR REDUCED PLANS 0 1 2 3

UNIT:
PROJECT NUMBER & PHASE: 1200020278
CONTRACT NO.: 12-0F96C1

DISREGARD PRINTS BEARING EARLIER REVISION DATES → REVISION DATES: ~~09-24-12~~ 01-14-13 04-22-13

SHEET 10 OF 11

FILE => RW297L-g-rwdt06.dgn

USERNAME => s124496 DATE PLOTTED => 29-AUG-2013 TIME PLOTTED => 09:28

DIST	COUNTY	ROUTE	POST MILES TOTAL PROJECT	SHEET No	TOTAL SHEETS
12	Ora	5	3.7/6.2	728	780

REGISTERED ENGINEER — 4/22/13 DATE

8-26-13
PLANS APPROVAL DATE

REGISTERED PROFESSIONAL ENGINEER — A. KORKOS NO. GE 2357 EXP. 3-31-14 GEOTECHNICAL — STATE OF CALIFORNIA

The State of California or its officers or agents shall not be responsible for the accuracy or completeness of electronic copies of this plan sheet.

ORANGE COUNTY TRANSPORTATION AUTHORITY
550 SOUTH MAIN STREET
ORANGE, CA 92863-1584

EARTH MECHANICS, INC.
17800 NEWHOPE STREET, SUITE B
FOUNTAIN VALLEY, CA 92708

BENCH MARK

DESIGNATION: 3SS-2-82 ELEV 95.558′

DESCRIBED BY OCS 2003 - FOUND 3¾" OCS ALUMINUM BENCH MARK DISK STAMPED "3SS-2-82", SET IN THE SOUTHEASTERLY CORNER OF A 4 FT. BY 4.5 FT. CONCRETE CATCH BASIN. MONUMENT IS LOCATED ALONG THE NORTHWESTERLY SIDE OF AVENIDA VAQUERO, 100 FT. NORTHERLY OF THE NORTHERLY EDGE OF THE SAN DIEGO FREEWAY OVERCROSSING OF AVENIDA VAQUERO, 23 FT. WESTERLY OF THE CENTERLINE OF VAQUERO AND 29.2 FT. SOUTHERLY OF A STREET STANDARD NO NUMBER. MONUMENT IS SET LEVEL WITH THE TOP OF THE CURB.

NOTES:

(1) This LOTB sheet was prepared in accordance with the Caltrans Soil and Rock Logging, Classification and Presentation Manual (June 2010).

(2) 2.4" samples were taken using a California Modified Sampler.

(3) An automatic trip hammer system consisting of a hammer weight of 140 lbs falling a distance of 30" was used to advance the drive sampler.

(4) Conversion factor from 2.4" Modified California Ring Sampler blowcounts to Standard Penetration Test (SPT) blowcounts is 0.5.

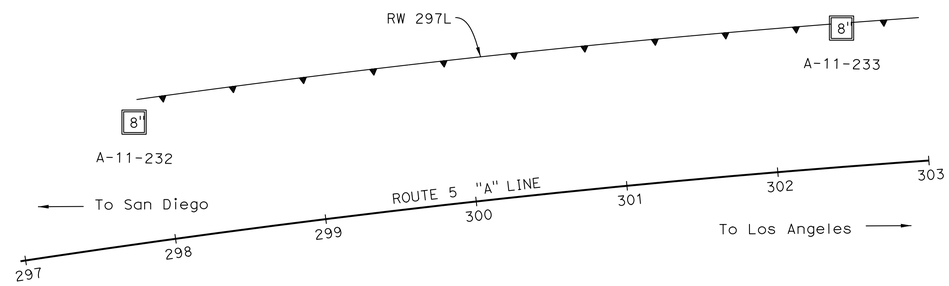

PLAN

1" = 50′

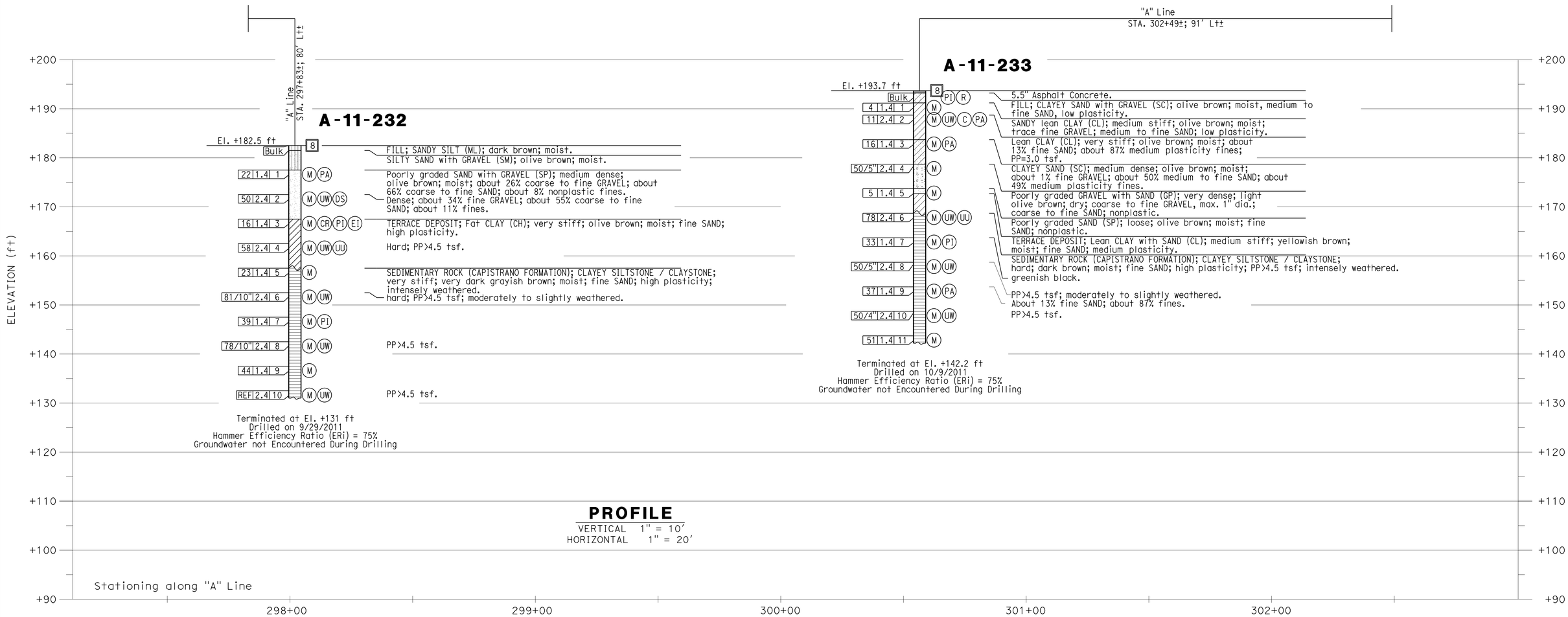

PROFILE

VERTICAL 1" = 10′
HORIZONTAL 1" = 20′

Luqi Yang — DESIGN OVERSIGHT Luqi Yang; 5-15-13 SIGN OFF DATE	DRAWN BY J. FANG	R. JIE; K. KAEKUL; C. PONGSAKORNPATARA — FIELD INVESTIGATION BY:	PREPARED FOR THE STATE OF CALIFORNIA DEPARTMENT OF TRANSPORTATION	A. KORKOS — PROJECT ENGINEER	BRIDGE NO. 55E0152	RETAINING WALL NO. 297L
	CHECKED BY G. J. GUNARANJAN	DATE: 9/2011, 10/2011			POST MILES 5.44	LOG OF TEST BORINGS

GS GEOTECHNICAL LOG OF TEST BORINGS SHEET (ENGLISH) (REV. 7/16/10)

ORIGINAL SCALE IN INCHES FOR REDUCED PLANS 0 1 2 3

UNIT:
PROJECT NUMBER & PHASE: 12000202781

DISREGARD PRINTS BEARING EARLIER REVISION DATES — REVISION DATES 04-27-12 09-24-12 01-14-13 04-22-13

SHEET 11 OF 11

FILE => RW297L-z-lotb1.dgn

CONTRACT NO.:12-0F96C1 PROJECT ID:1200020278

USERNAME => s124496 DATE PLOTTED => 29-AUG-2013 TIME PLOTTED => 09:28

DIST	COUNTY	ROUTE	POST MILES TOTAL PROJECT	SHEET No	TOTAL SHEETS
12	Ora	5	3.7/6.2	729	780

REGISTERED CIVIL ENGINEER — DATE 4/22/13

8-26-13
PLANS APPROVAL DATE

REGISTERED PROFESSIONAL ENGINEER — MOHAN S. CHAR — No. 57894 — Exp. 6/30/14 — CIVIL — STATE OF CALIFORNIA

The State of California or its officers or agents shall not be responsible for the accuracy or completeness of electronic copies of this plan sheet.

ORANGE COUNTY TRANSPORTATION AUTHORITY
550 SOUTH MAIN STREET
ORANGE, CA 92863-1584

AECOM TECHNICAL SERVICES INC.
999 W. TOWN & COUNTRY ROAD
ORANGE, CALIFORNIA 92868

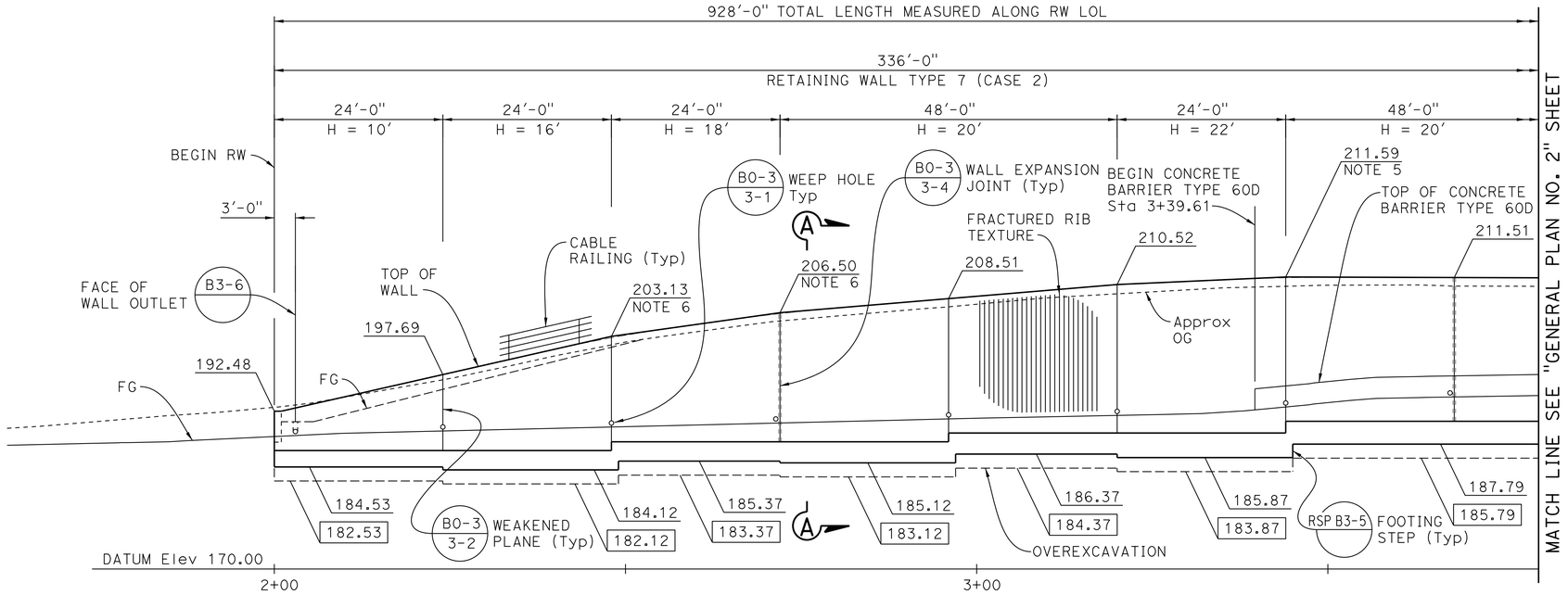

DEVELOPED MIRROR ELEVATION

1" = 10'

CURVE DATA				
No.	R	Δ	L	T
1	7500.00'	8°38'28"	1131.13'	566.64'

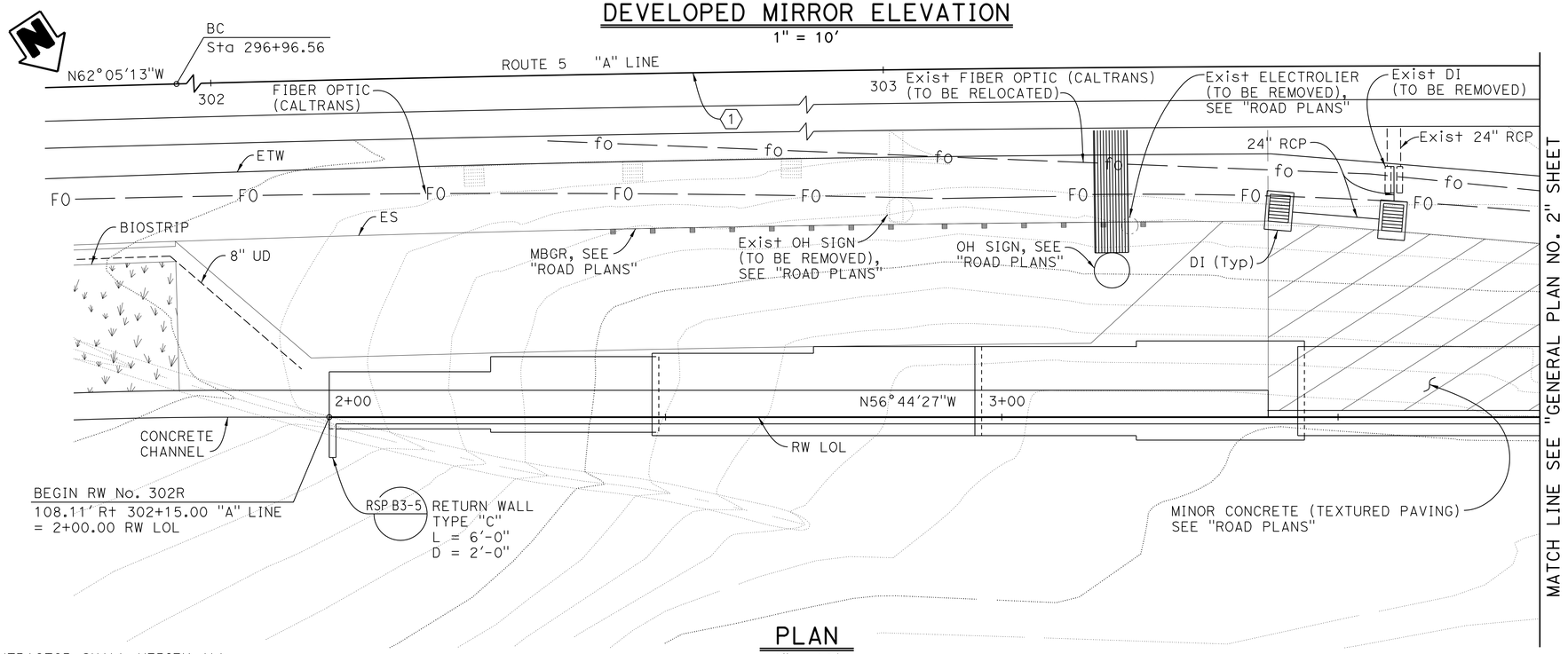

PLAN

1" = 10'

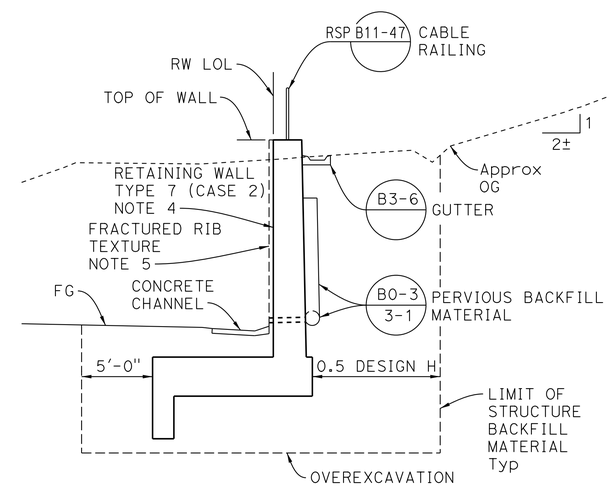

SECTION A-A

3/16" = 1'-0"

NOTES:

1. All wall expansion joints, weakened planes and footing steps occur at intervals of 24'-0" unless shown otherwise.
2. For "INDEX TO PLANS" and "LEGEND", see "INDEX TO PLANS" sheet.
3. For "QUANTITIES", see "GENERAL PLAN No. 4" sheet.
4. For Retaining Wall Type 7 (Case 2) details, see "RETAINING WALL TYPE 7 (CASE 2)-DETAILS NO. 1", "VERTICAL GROUND ANCHOR DETAILS NO. 1" and "VERTICAL GROUND ANCHOR DETAILS NO. 2" sheets.
5. For "FRACTURED RIB TEXTURE", see "INDEX TO PLANS" sheet.
6. Construct 20'-0" VC at slope change per RSP B3-5

NOTE:
THE CONTRACTOR SHALL VERIFY ALL CONTROLLING FIELD DIMENSIONS BEFORE ORDERING OR FABRICATING ANY MATERIAL.

Luqi Yang
DESIGN OVERSIGHT — Luqi Yang
5-15-13
SIGN OFF DATE

	BY	CHECKED
DESIGN	J. Quinoveva	C. Weber
DETAILS	J. Quinoveva	C. Weber
QUANTITIES	J. Quinoveva	D. Kim

LOAD & RESISTANCE FACTOR DESIGN — LIVE LOADING: HL93 W/"LOW-BOY"; PERMIT DESIGN VEHICLE

	BY	CHECKED
LAYOUT	J. Quinoveva	C. Weber
SPECIFICATIONS	M. Char	PLANS AND SPECS COMPARED M. Char

PREPARED FOR THE STATE OF CALIFORNIA DEPARTMENT OF TRANSPORTATION

Mohan S. Char
PROJECT ENGINEER

BRIDGE NO. 55E0131
POST MILES 5.52

RETAINING WALL NO. 302R
GENERAL PLAN NO. 1

DESIGN GENERAL PLAN SHEET (ENGLISH) (REV.7/16/10)

ORIGINAL SCALE IN INCHES FOR REDUCED PLANS 0 1 2 3

UNIT:
PROJECT NUMBER & PHASE: 1200020278 CONTRACT NO.: 12-0F96C1

DISREGARD PRINTS BEARING EARLIER REVISION DATES — REVISION DATES 04-27-12 09-24-12 01-14-13 04-22-13

SHEET 1 OF 13

FILE => RW302R-a-gp01.dgn

USERNAME => s124496 DATE PLOTTED => 29-AUG-2013 TIME PLOTTED => 09:28

DIST	COUNTY	ROUTE	POST MILES TOTAL PROJECT	SHEET No	TOTAL SHEETS
12	Ora	5	3.7/6.2	730	780

REGISTERED CIVIL ENGINEER — 4/22/13 DATE

8-26-13
PLANS APPROVAL DATE

REGISTERED PROFESSIONAL ENGINEER — MOHAN S. CHAR No. 57894 Exp. 6/30/14 CIVIL — STATE OF CALIFORNIA

The State of California or its officers or agents shall not be responsible for the accuracy or completeness of electronic copies of this plan sheet.

ORANGE COUNTY TRANSPORTATION AUTHORITY
550 SOUTH MAIN STREET
ORANGE, CA 92863-1584

AECOM TECHNICAL SERVICES INC.
999 W. TOWN & COUNTRY ROAD
ORANGE, CALIFORNIA 92868

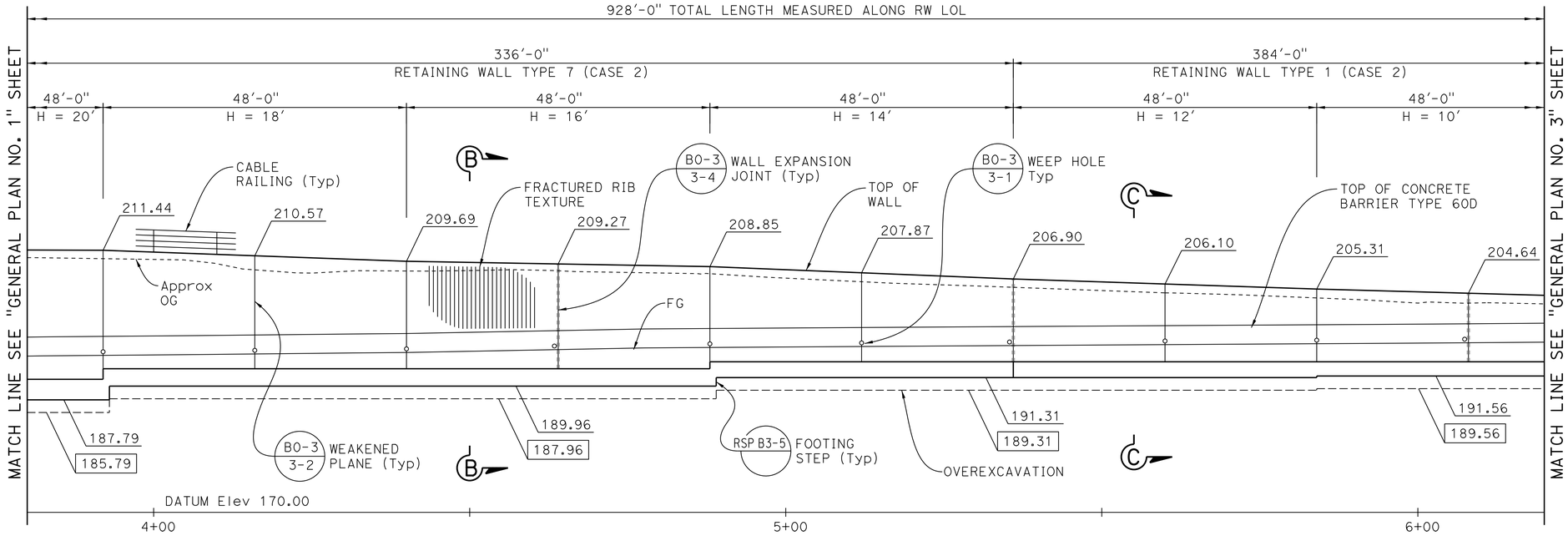

DEVELOPED MIRROR ELEVATION
1" = 10'

CURVE DATA				
No.	R	Δ	L	T
1	7500.00'	8°38'28"	1131.13'	566.64'
2	7391.04'	3°18'52"	427.57'	213.85'
3	500.00'	7°01'40"	61.33'	30.70'

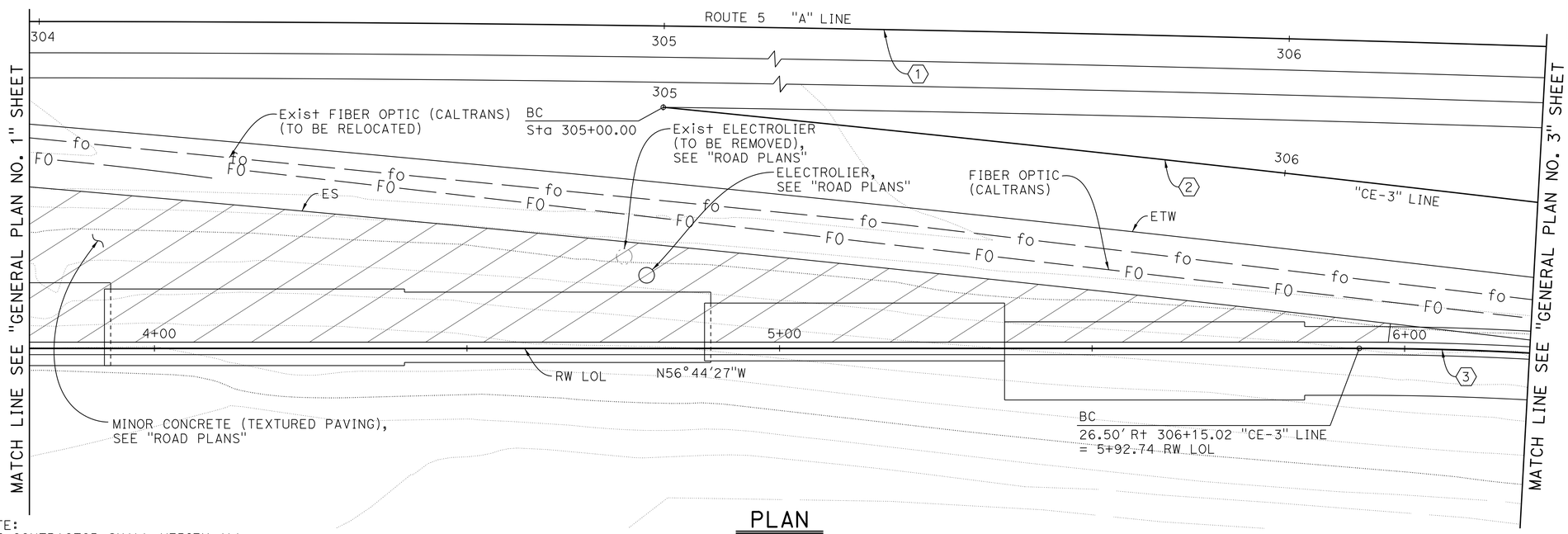

PLAN
1" = 10'

NOTES:
1. All wall expansion joints, weakened planes and footing steps occur at intervals of 24'-0" unless shown otherwise.
2. For "INDEX TO PLANS" and "LEGEND", see "INDEX TO PLANS" sheet.
3. For "QUANTITIES", see "GENERAL PLAN No. 4" sheet.
4. For "SECTION B-B" and "SECTION C-C", see "GENERAL PLAN NO. 5" sheet.

NOTE:
THE CONTRACTOR SHALL VERIFY ALL CONTROLLING FIELD DIMENSIONS BEFORE ORDERING OR FABRICATING ANY MATERIAL.

Luqi Yang
DESIGN OVERSIGHT Luqi Yang
5-15-13
SIGN OFF DATE

	BY	CHECKED			
DESIGN	J. Quinoveva	C. Weber	LOAD & RESISTANCE FACTOR DESIGN	LIVE LOADING: HL93 W/"LOW-BOY"; PERMIT DESIGN VEHICLE	
DETAILS	J. Quinoveva	C. Weber	LAYOUT	J. Quinoveva	C. Weber
QUANTITIES	J. Quinoveva	D. Kim	SPECIFICATIONS	M. Char	PLANS AND SPECS COMPARED M. Char

PREPARED FOR THE STATE OF CALIFORNIA DEPARTMENT OF TRANSPORTATION

Mohan S. Char
PROJECT ENGINEER

BRIDGE NO. 55E0131
POST MILES 5.52

RETAINING WALL NO. 302R
GENERAL PLAN NO. 2

DESIGN GENERAL PLAN SHEET (ENGLISH) (REV.7/16/10)

ORIGINAL SCALE IN INCHES FOR REDUCED PLANS 0 1 2 3

UNIT:
PROJECT NUMBER & PHASE: 1200020278
CONTRACT NO.: 12-0F96C1

DISREGARD PRINTS BEARING EARLIER REVISION DATES
REVISION DATES: 04-21-12 09-24-12 01-14-13 04-22-13
SHEET 2 OF 13

FILE => RW302R-a-gp02.dgn

USERNAME => s124496 DATE PLOTTED => 29-AUG-2013 TIME PLOTTED => 09:28

DIST	COUNTY	ROUTE	POST MILES TOTAL PROJECT	SHEET No	TOTAL SHEETS
12	Ora	5	3.7/6.2	731	780

REGISTERED CIVIL ENGINEER 4/22/13 DATE

8-26-13
PLANS APPROVAL DATE

REGISTERED PROFESSIONAL ENGINEER MOHAN S. CHAR No. 57894 Exp. 6/30/14 CIVIL STATE OF CALIFORNIA

The State of California or its officers or agents shall not be responsible for the accuracy or completeness of electronic copies of this plan sheet.

ORANGE COUNTY TRANSPORTATION AUTHORITY
550 SOUTH MAIN STREET
ORANGE, CA 92863-1584

AECOM TECHNICAL SERVICES INC.
999 W. TOWN & COUNTRY ROAD
ORANGE, CALIFORNIA 92868

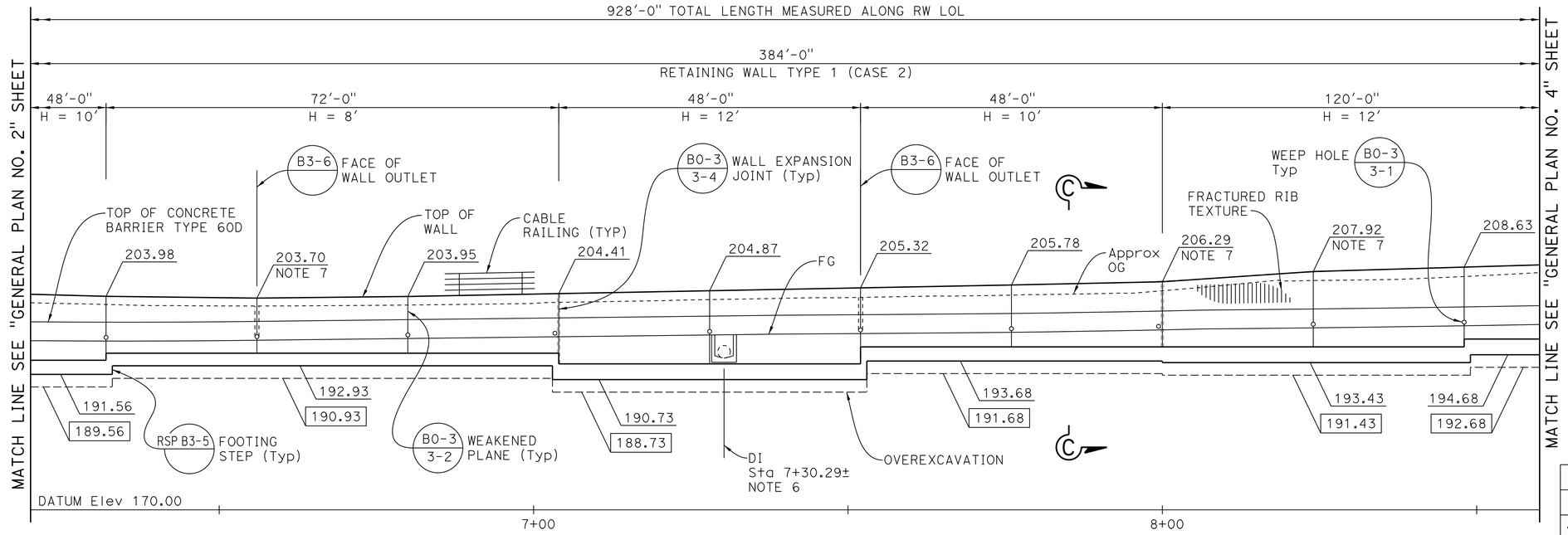

DEVELOPED MIRROR ELEVATION
1" = 10'

CURVE DATA				
No.	R	Δ	L	T
2	7391.04'	3°18'52"	427.57'	213.85'
3	500.00'	7°01'40"	61.33'	30.70'
4	7368.04'	0°55'39"	119.26'	59.63'
5	500.00'	11°05'34"	96.80'	48.55'

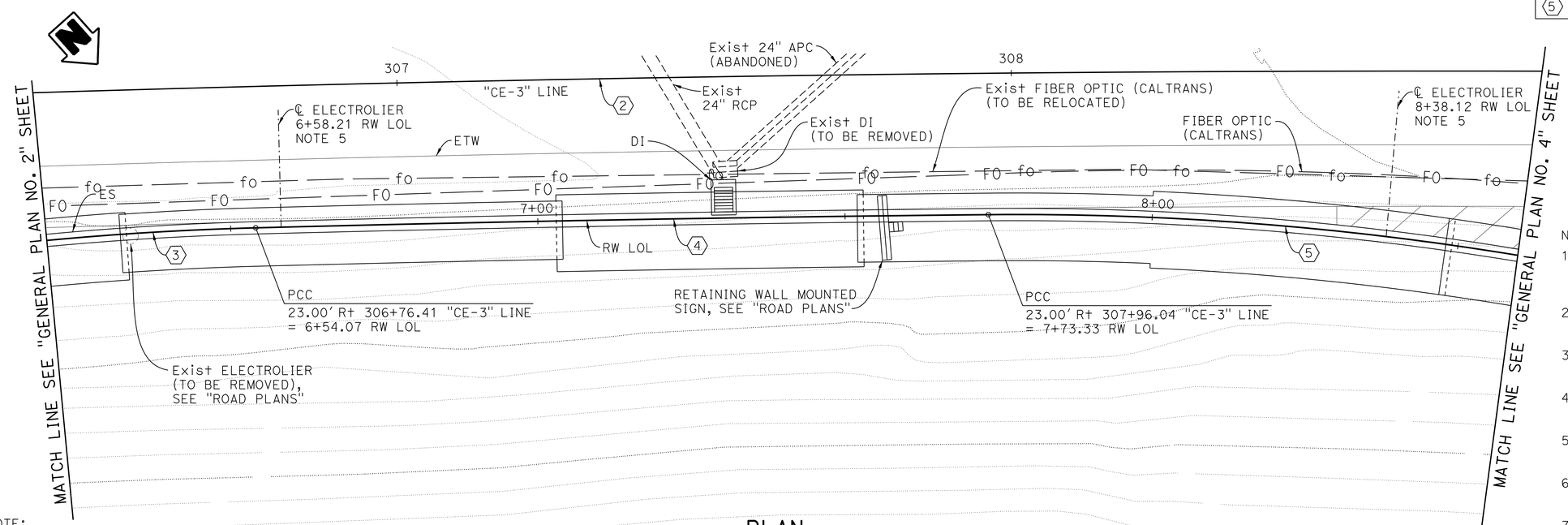

PLAN
1" = 10'

NOTES:

1. All wall expansion joints, weakened planes and footing steps occur at intervals of 24'-0" unless shown otherwise.
2. For "INDEX TO PLANS" and "LEGEND", see "INDEX TO PLANS" sheet.
3. For "QUANTITIES", see "GENERAL PLAN No. 4" sheet.
4. For "SECTION C-C", see "GENERAL PLAN NO. 5" sheet.
5. For electrolier pedestal details, see "ELECTROLIER PEDESTAL DETAILS" sheet.
6. For "SECTION AT INLET", see "INDEX TO PLANS" sheet.
7. Construct 20'-0" VC at slope change per RSP B3-5

NOTE:
THE CONTRACTOR SHALL VERIFY ALL CONTROLLING FIELD DIMENSIONS BEFORE ORDERING OR FABRICATING ANY MATERIAL.

Luqi Yang
DESIGN OVERSIGHT Luqi Yang
5-15-13
SIGN OFF DATE

	BY	CHECKED
DESIGN	J. Quinoveva	C. Weber
DETAILS	J. Quinoveva	C. Weber
QUANTITIES	J. Quinoveva	D. Kim

LOAD & RESISTANCE FACTOR DESIGN — LIVE LOADING: HL93 W/"LOW-BOY"; PERMIT DESIGN VEHICLE

	BY	CHECKED
LAYOUT	J. Quinoveva	C. Weber
SPECIFICATIONS	M. Char	PLANS AND SPECS COMPARED M. Char

PREPARED FOR THE STATE OF CALIFORNIA DEPARTMENT OF TRANSPORTATION

Mohan S. Char
PROJECT ENGINEER

BRIDGE NO. 55E0131
POST MILES 5.52

RETAINING WALL NO. 302R
GENERAL PLAN NO. 3

DESIGN GENERAL PLAN SHEET (ENGLISH) (REV.7/16/10)

ORIGINAL SCALE IN INCHES FOR REDUCED PLANS 0 1 2 3

UNIT:
PROJECT NUMBER & PHASE: 1200020278 CONTRACT NO.: 12-0F96C1

DISREGARD PRINTS BEARING EARLIER REVISION DATES

REVISION DATES: 04-27-12 09-24-12 01-14-13 04-22-13

SHEET 3 OF 13

FILE => RW302R-a-gp03.dgn

USERNAME => s124496 DATE PLOTTED => 29-AUG-2013 TIME PLOTTED => 09:28

DIST	COUNTY	ROUTE	POST MILES TOTAL PROJECT	SHEET No	TOTAL SHEETS
12	Ora	5	3.7/6.2	732	780

REGISTERED CIVIL ENGINEER — 4/22/13 DATE

8-26-13
PLANS APPROVAL DATE

REGISTERED PROFESSIONAL ENGINEER — MOHAN S. CHAR No. 57894 Exp. 6/30/14 CIVIL — STATE OF CALIFORNIA

The State of California or its officers or agents shall not be responsible for the accuracy or completeness of electronic copies of this plan sheet.

ORANGE COUNTY TRANSPORTATION AUTHORITY
550 SOUTH MAIN STREET
ORANGE, CA 92863-1584

AECOM TECHNICAL SERVICES INC.
999 W. TOWN & COUNTRY ROAD
ORANGE, CALIFORNIA 92868

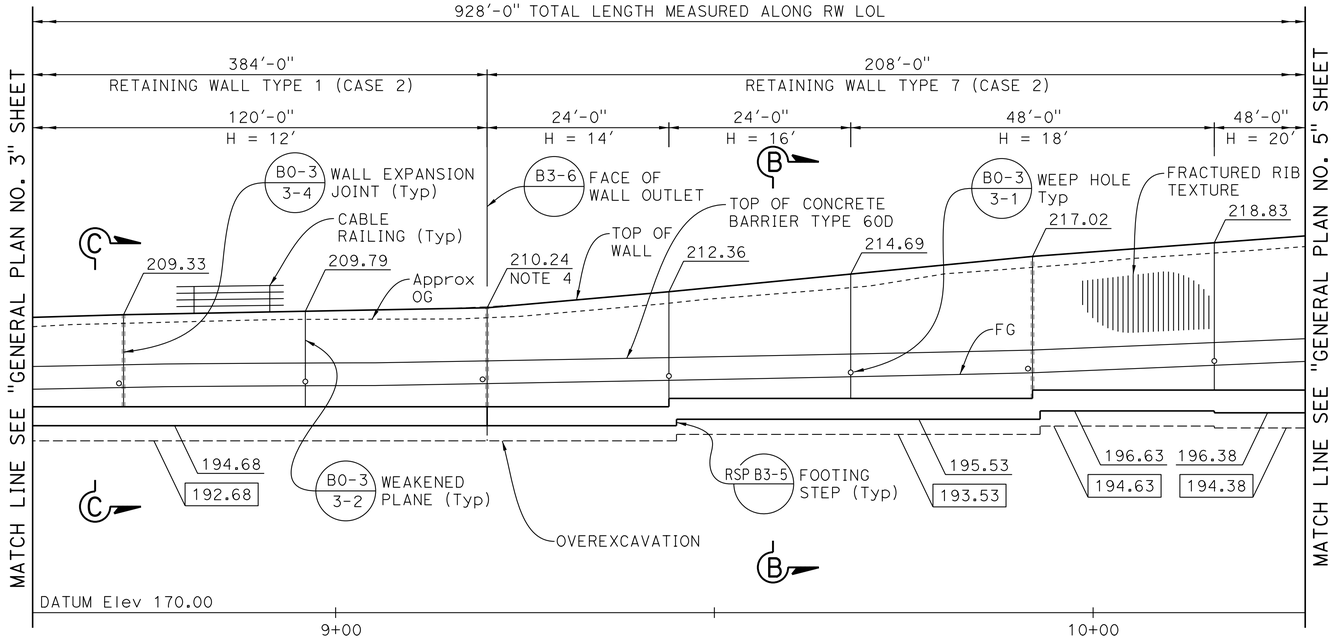

DEVELOPED MIRROR ELEVATION
1" = 10'

CURVE DATA				
No.	R	Δ	L	T
2	7391.04'	3°18'52"	427.57'	213.85'
5	500.00'	11°05'34"	96.80'	48.55'
6	900.00'	10°27'39"	164.32'	82.39'
7	600.00'	36°11'59"	379.09'	196.11'

RETAINING WALL NO. 302R — BRIDGE NO 55E0131

QUANTITIES

GROUND MONITORING PROGRAM	LUMP	SUM
STRUCTURE EXCAVATION (RETAINING WALL)	6,100	CY
STRUCTURE BACKFILL (RETAINING WALL)	3,845	CY
PERVIOUS BACKFILL MATERIAL (RETAINING WALL)	305	CY
GROUND ANCHOR (VERTICAL)	88	EA
STRUCTURAL CONCRETE, RETAINING WALL	2,200	CY
FRACTURED RIB TEXTURE	8,520	SQFT
BAR REINFORCING STEEL (RETAINING WALL)	261,000	LB
MINOR CONCRETE (GUTTER) (LF)	932	LF
CABLE RAILING	932	LF

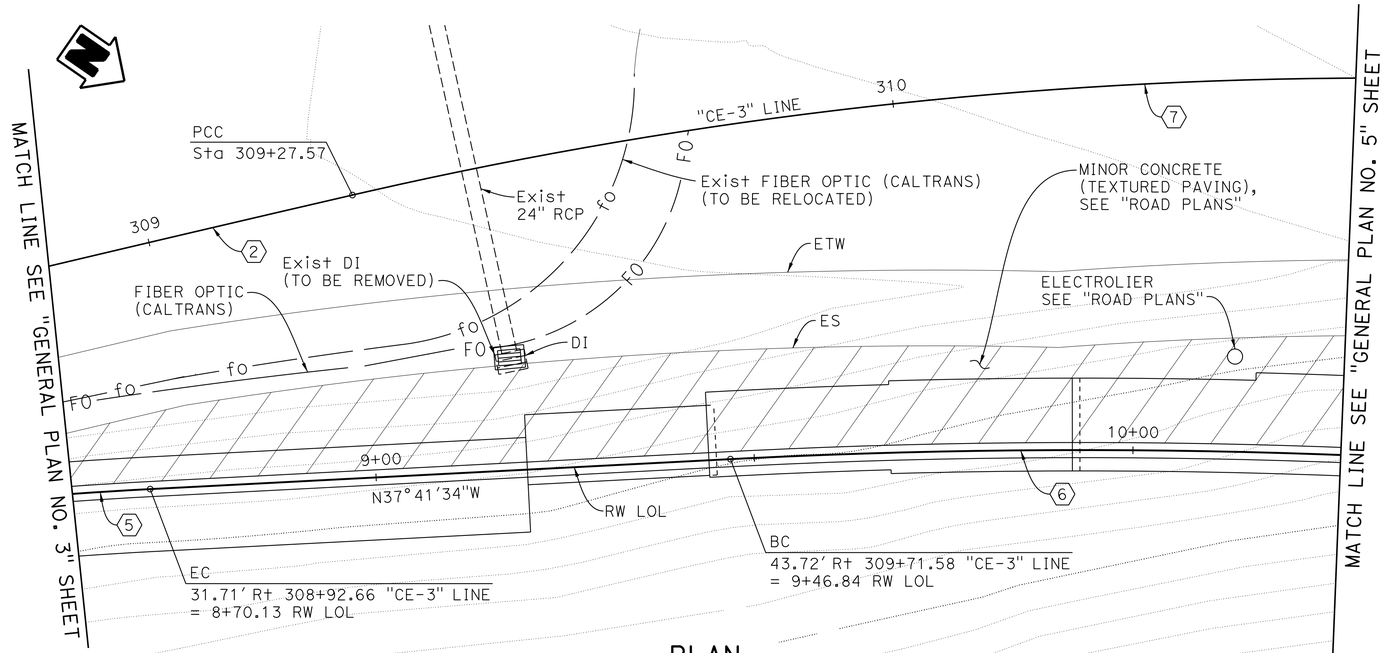

PLAN
1" = 10'

NOTES:
1. All wall expansion joints, weakened planes and footing steps occur at intervals of 24'-0" unless shown otherwise.
2. For "INDEX TO PLANS" and "LEGEND", see "INDEX TO PLANS" sheet.
3. For "SECTION B-B" and "SECTION C-C", see "GENERAL PLAN NO. 5" sheet.
4. Construct 20'-0" VC at slope change per RSP B3-5

NOTE:
THE CONTRACTOR SHALL VERIFY ALL CONTROLLING FIELD DIMENSIONS BEFORE ORDERING OR FABRICATING ANY MATERIAL.

Luqi Yang
DESIGN OVERSIGHT — Luqi Yang
5-15-13
SIGN OFF DATE

	BY	CHECKED
DESIGN	J. Quinoveva	C. Weber
DETAILS	J. Quinoveva	C. Weber
QUANTITIES	J. Quinoveva	D. Kim

LOAD & RESISTANCE FACTOR DESIGN — LIVE LOADING: HL93 W/"LOW-BOY"; PERMIT DESIGN VEHICLE

	BY	CHECKED
LAYOUT	J. Quinoveva	C. Weber
SPECIFICATIONS	M. Char	PLANS AND SPECS COMPARED M. Char

PREPARED FOR THE STATE OF CALIFORNIA DEPARTMENT OF TRANSPORTATION

Mohan S. Char
PROJECT ENGINEER

BRIDGE NO. 55E0131
POST MILES 5.52

RETAINING WALL NO. 302R
GENERAL PLAN NO. 4

DESIGN GENERAL PLAN SHEET (ENGLISH) (REV.7/16/10)

ORIGINAL SCALE IN INCHES FOR REDUCED PLANS 0 1 2 3

UNIT:
PROJECT NUMBER & PHASE: 1200020278 CONTRACT NO.: 12-0F96C1

DISREGARD PRINTS BEARING EARLIER REVISION DATES → 04-27-12 09-24-12 01-14-13 04-22-13

SHEET 4 OF 13

FILE => RW302R-a-gp04.dgn

USERNAME => s124436 DATE PLOTTED => 29-AUG-2013 TIME PLOTTED => 09:29

DIST	COUNTY	ROUTE	POST MILES TOTAL PROJECT	SHEET No	TOTAL SHEETS
12	Ora	5	3.7/6.2	733	780

REGISTERED CIVIL ENGINEER 4/22/13 DATE

8-26-13
PLANS APPROVAL DATE

The State of California or its officers or agents shall not be responsible for the accuracy or completeness of electronic copies of this plan sheet.

REGISTERED PROFESSIONAL ENGINEER MOHAN S. CHAR No. 57894 Exp. 6/30/14 CIVIL STATE OF CALIFORNIA

ORANGE COUNTY TRANSPORTATION AUTHORITY
550 SOUTH MAIN STREET
ORANGE, CA 92863-1584

AECOM TECHNICAL SERVICES INC.
999 W. TOWN & COUNTRY ROAD
ORANGE, CALIFORNIA 92868

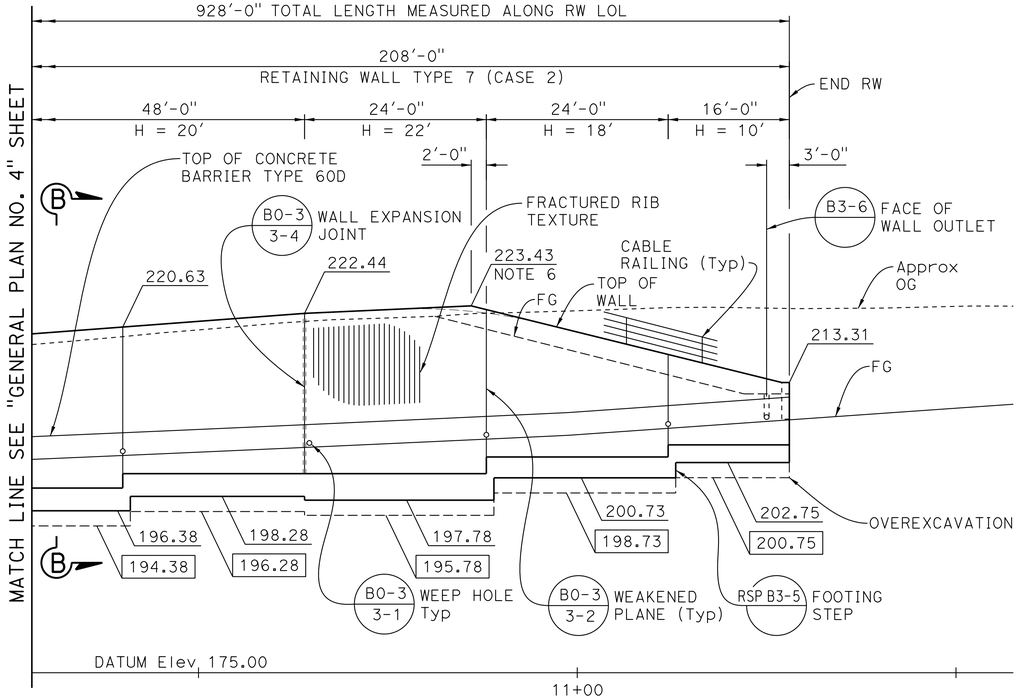

DEVELOPED MIRROR ELEVATION
1" = 10'

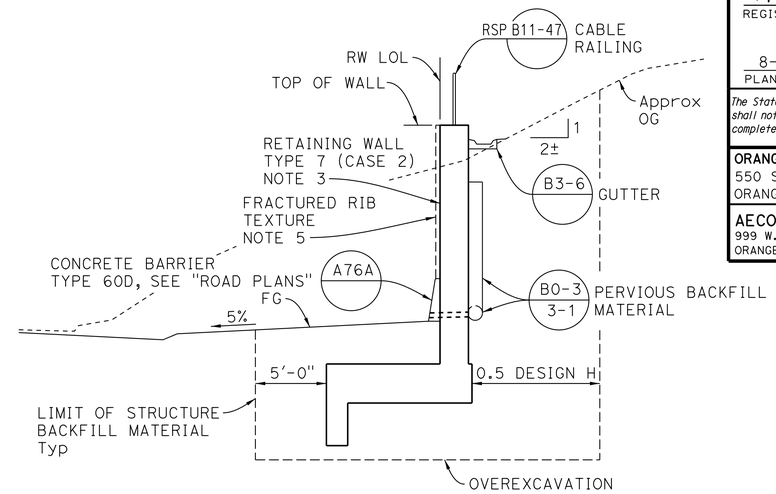

SECTION B-B
3/16" = 1'-0"

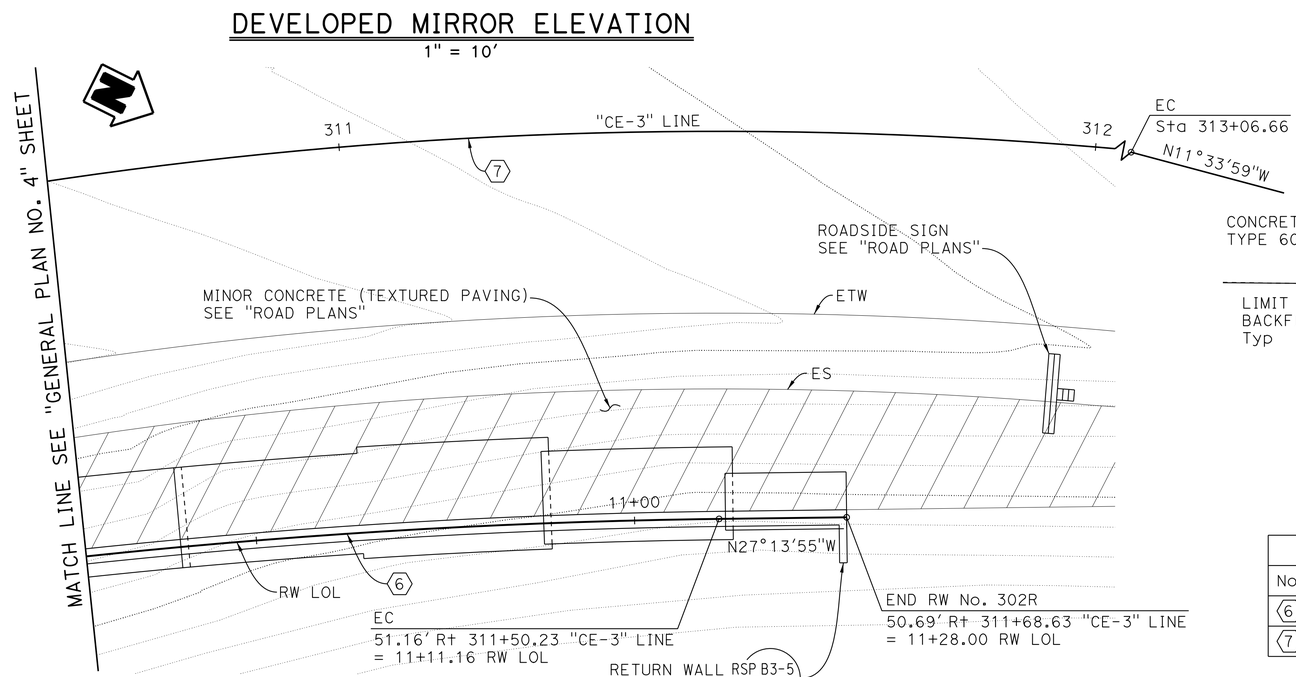

NOTE:
THE CONTRACTOR SHALL VERIFY ALL CONTROLLING FIELD DIMENSIONS BEFORE ORDERING OR FABRICATING ANY MATERIAL.

PLAN
1" = 10'

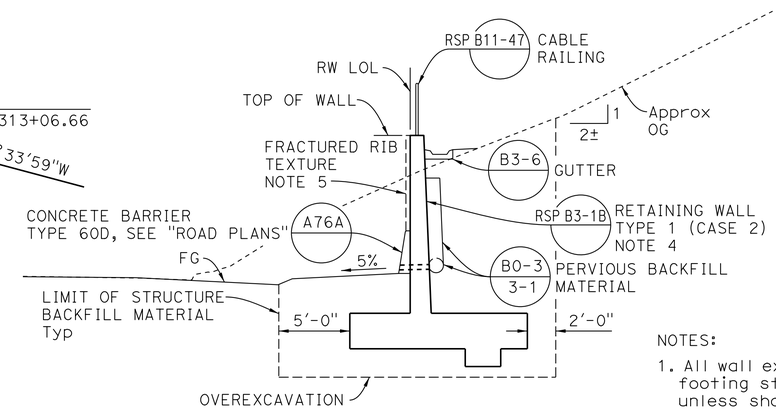

SECTION C-C
3/16" = 1'-0"

CURVE DATA				
No.	R	Δ	L	T
6	900.00'	10°27'39"	164.32'	82.39'
7	600.00'	36°11'59"	379.09'	196.11'

NOTES:

1. All wall expansion joints, weakened planes and footing steps occur at intervals of 24'-0" unless shown otherwise.
2. For "INDEX TO PLANS" and "LEGEND", see "INDEX TO PLANS" sheet.
3. For Retaining Wall Type 7 (Case 2) details, see "RETAINING WALL TYPE 7 (CASE 2)-DETAILS NO. 1", "VERTICAL GROUND ANCHOR DETAILS NO. 1" and "VERTICAL GROUND ANCHOR DETAILS NO. 2" sheets.
4. For "REINFORCING DETAILS", see "INDEX TO PLANS" sheet.
5. For "FRACTURED RIB TEXTURE", see "INDEX TO PLANS" sheet.
6. Construct 20'-0" VC at slope change per RSP B3-5

Luqi Yang
DESIGN OVERSIGHT Luqi Yang
5-15-13
SIGN OFF DATE

	BY	CHECKED		BY	CHECKED
DESIGN	J. Quinoveva	C. Weber	LOAD & RESISTANCE FACTOR DESIGN	LIVE LOADING: HL93 W/"LOW-BOY"; PERMIT DESIGN VEHICLE	
DETAILS	J. Quinoveva	C. Weber	LAYOUT	J. Quinoveva	C. Weber
QUANTITIES	J. Quinoveva	D. Kim	SPECIFICATIONS	M. Char	PLANS AND SPECS COMPARED M. Char

PREPARED FOR THE STATE OF CALIFORNIA DEPARTMENT OF TRANSPORTATION

Mohan S. Char
PROJECT ENGINEER

BRIDGE NO. 55E0131
POST MILES 5.52

RETAINING WALL NO. 302R
GENERAL PLAN NO. 5

DESIGN GENERAL PLAN SHEET (ENGLISH) (REV.7/16/10)

ORIGINAL SCALE IN INCHES FOR REDUCED PLANS 0 1 2 3

UNIT:
PROJECT NUMBER & PHASE: 1200020278 CONTRACT NO.: 12-0F96C1

DISREGARD PRINTS BEARING EARLIER REVISION DATES

REVISION DATES 04-27-12 09-24-12 01-14-13 04-22-13 SHEET 5 OF 13

FILE => RW302R-a-gp05.dgn

USERNAME => s124496 DATE PLOTTED => 29-AUG-2013 TIME PLOTTED => 09:23

DIST	COUNTY	ROUTE	POST MILES TOTAL PROJECT	SHEET No	TOTAL SHEETS
12	Ora	5	3.7/6.2	734	780

REGISTERED CIVIL ENGINEER — DATE 4/22/13

8-26-13
PLANS APPROVAL DATE

REGISTERED PROFESSIONAL ENGINEER — MOHAN S. CHAR No. 57894 Exp. 6/30/14 CIVIL — STATE OF CALIFORNIA

The State of California or its officers or agents shall not be responsible for the accuracy or completeness of electronic copies of this plan sheet.

ORANGE COUNTY TRANSPORTATION AUTHORITY
550 SOUTH MAIN STREET
ORANGE, CA 92863-1584

AECOM TECHNICAL SERVICES INC.
999 W. TOWN & COUNTRY ROAD
ORANGE, CALIFORNIA 92868

INDEX TO PLANS

No.	Title
1	GENERAL PLAN NO. 1
2	GENERAL PLAN NO. 2
3	GENERAL PLAN NO. 3
4	GENERAL PLAN NO. 4
5	GENERAL PLAN NO. 5
6	INDEX TO PLANS
7	RETAINING WALL TYPE 7 (CASE 2)-DETAILS NO. 1
8	RETAINING WALL TYPE 7 (CASE 2)-DETAILS NO. 2
9	VERTICAL GROUND ANCHOR DETAILS NO. 1
10	VERTICAL GROUND ANCHOR DETAILS NO. 2
11	ELECTROLIER PEDESTAL DETAILS
12	LOG OF TEST BORINGS NO. 1 OF 2
13	LOG OF TEST BORINGS NO. 2 OF 2

STANDARD PLANS 2010 EDITION

	A10A	ABBREVIATIONS (SHEET 1 OF 2)
	A10B	ABBREVIATIONS (SHEET 2 OF 2)
	A10C	LINES AND SYMBOLS (SHEET 1 OF 3)
	A10D	LINES AND SYMBOLS (SHEET 2 OF 3)
	A10E	LINES AND SYMBOLS (SHEET 3 OF 3)
	A10F	LEGEND - SOIL (SHEET 1 OF 2)
	A10G	LEGEND - SOIL (SHEET 2 OF 2)
	A10H	LEGEND - ROCK
	A62B	LIMITS OF PAYMENT FOR EXCAVATION AND BACKFILL - BRIDGE SURCHARGE AND WALL
	A76A	CONCRETE BARRIER TYPE 60
	B0-3	BRIDGE DETAILS
RSP	B3-1B	RETAINING WALL TYPE 1 (CASE 2)
RSP	B3-5	RETAINING WALL DETAILS NO. 1
	B3-6	RETAINING WALL DETAILS NO. 2
RSP	B11-47	CABLE RAILING
	ES-6A	ELECTRICAL SYSTEMS (LIGHTING STANDARD, TYPES 15 AND 21)
	ES-6B	ELECTRICAL SYSTEMS (ELECTROLIER ANCHORAGE AND GROUTING FOR TYPE 15 AND TYPE 21 BARRIER RAIL MOUNTED)
	ES-9D	ELECTRICAL SYSTEMS (STRUCTURE PULL BOX INSTALLATIONS)

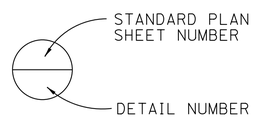

LEGEND

Denotes top of wall elevation (feet)

Denotes bottom of footing elevation (feet)

Denotes bottom of overexcavation (feet)

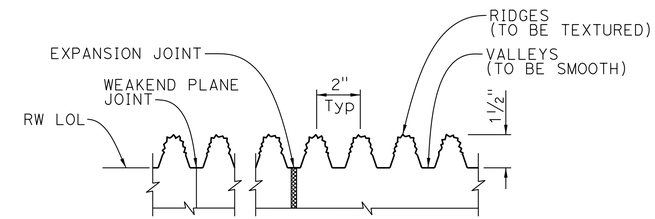

FRACTURED RIB TEXTURE

NO SCALE

NOTE:
Weakened Plane and Expansion Joints to be centered in valleys.

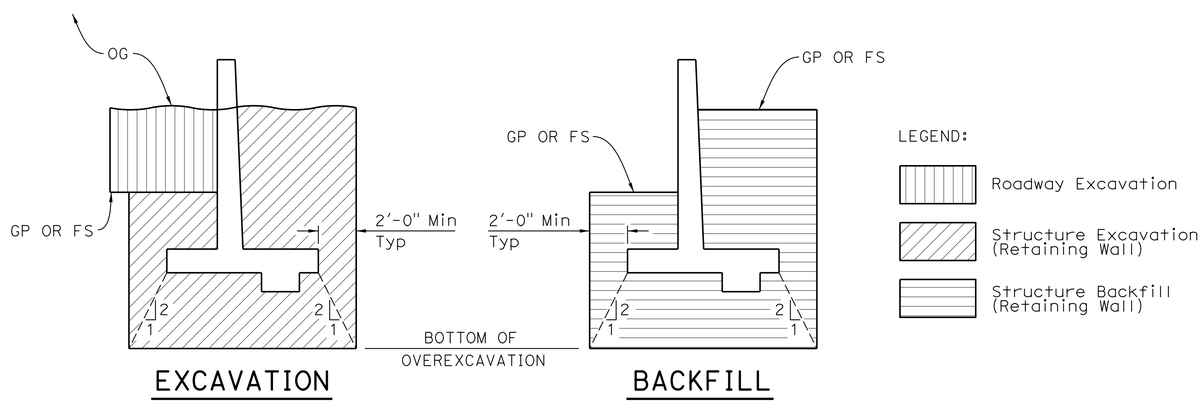

EXCAVATION

BACKFILL

LIMITS OF PAYMENT FOR EXCAVATION AND BACKFILL

NO SCALE

NOTE: Retaining Wall Type 1 shown, Retaining Wall Type 7 similar.

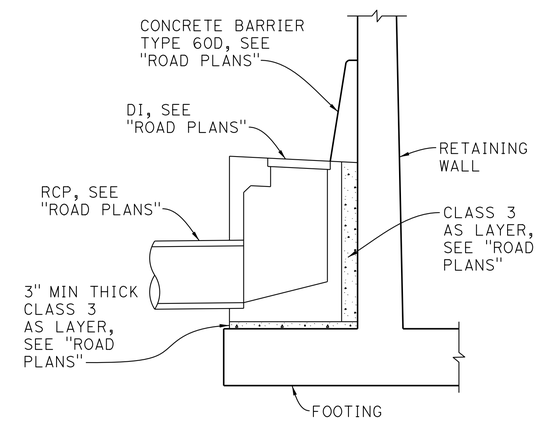

SECTION AT INLET

NO SCALE

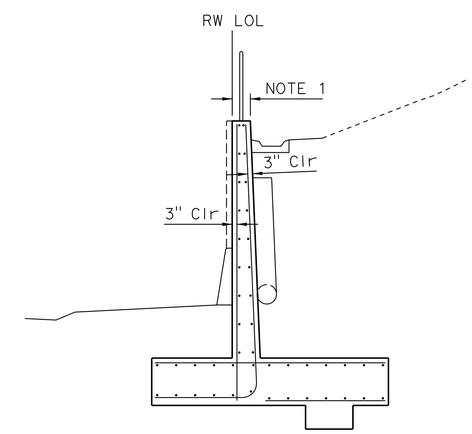

REINFORCING DETAILS

1/4" = 1'-0"

NOTES:
1. ADD 1" TO DIMENSION AS DETERMINED BY RSP B3-1B
2. FOR DETAILS NOT SHOWN, SEE RSP B3-1B

NOTE:
THE CONTRACTOR SHALL VERIFY ALL CONTROLLING FIELD DIMENSIONS BEFORE ORDERING OR FABRICATING ANY MATERIAL.

Luqi Yang — DESIGN OVERSIGHT: Luqi Yang; 5-15-13 SIGN OFF DATE	DESIGN	BY J. Quinoveva	CHECKED C. Weber	LOAD & RESISTANCE FACTOR DESIGN	LIVE LOADING: HL93 W/"LOW-BOY"; PERMIT DESIGN VEHICLE
	DETAILS	BY H. Withers	CHECKED C. Weber	LAYOUT BY J. Quinoveva	CHECKED C. Weber
	QUANTITIES	BY J. Quinoveva	CHECKED D. Kim	SPECIFICATIONS BY M. Char	PLANS AND SPECS COMPARED M. Char

PREPARED FOR THE STATE OF CALIFORNIA DEPARTMENT OF TRANSPORTATION

Mohan S. Char — PROJECT ENGINEER

BRIDGE NO. 55E0131
POST MILES 5.52

RETAINING WALL NO. 302R
INDEX TO PLANS

DESIGN GENERAL PLAN SHEET (ENGLISH) (REV.7/16/10)

ORIGINAL SCALE IN INCHES FOR REDUCED PLANS 0 1 2 3

UNIT:
PROJECT NUMBER & PHASE: 1200020278 CONTRACT NO.: 12-0F96C1

DISREGARD PRINTS BEARING EARLIER REVISION DATES → REVISION DATES 04-27-12 09-24-12 01-14-13 04-22-13

SHEET 6 OF 13

FILE => RW302R-a-itp01.dgn

USERNAME => s124496 DATE PLOTTED => 23-AUG-2013 TIME PLOTTED => 09:29

DIST	COUNTY	ROUTE	POST MILES TOTAL PROJECT	SHEET No	TOTAL SHEETS
12	Ora	5	3.7/6.2	735	780

REGISTERED CIVIL ENGINEER — 4/22/13 DATE

8-26-13
PLANS APPROVAL DATE

REGISTERED PROFESSIONAL ENGINEER — MOHAN S. CHAR — No. 57894 — Exp. 6/30/14 — CIVIL — STATE OF CALIFORNIA

The State of California or its officers or agents shall not be responsible for the accuracy or completeness of electronic copies of this plan sheet.

ORANGE COUNTY TRANSPORTATION AUTHORITY
550 SOUTH MAIN STREET
ORANGE, CA 92863-1584

AECOM TECHNICAL SERVICES INC.
999 W. TOWN & COUNTRY ROAD
ORANGE, CALIFORNIA 92868

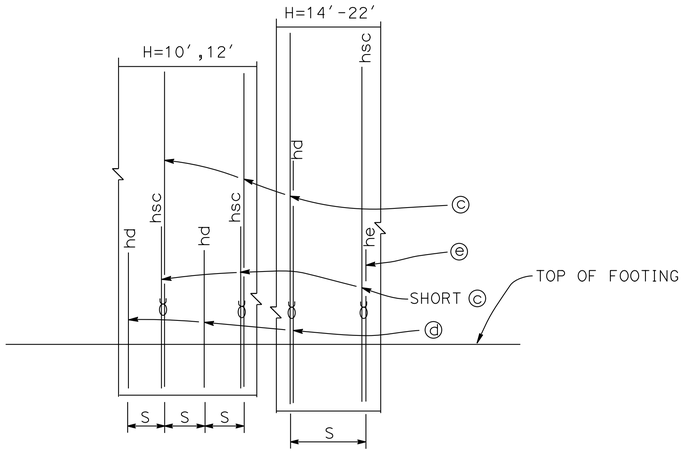

ELEVATION
No Scale

NOTE:

"hsc", "hd" and "he" above bars indicate distance from top of footing to upper end of the bars, see table.

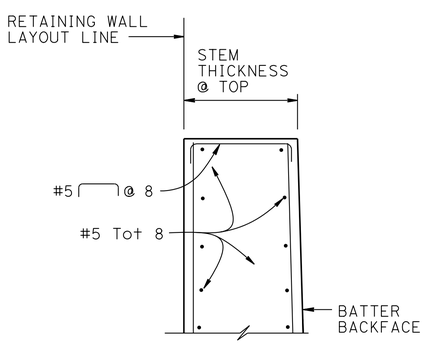

DETAIL A
¾ = 1′-0"

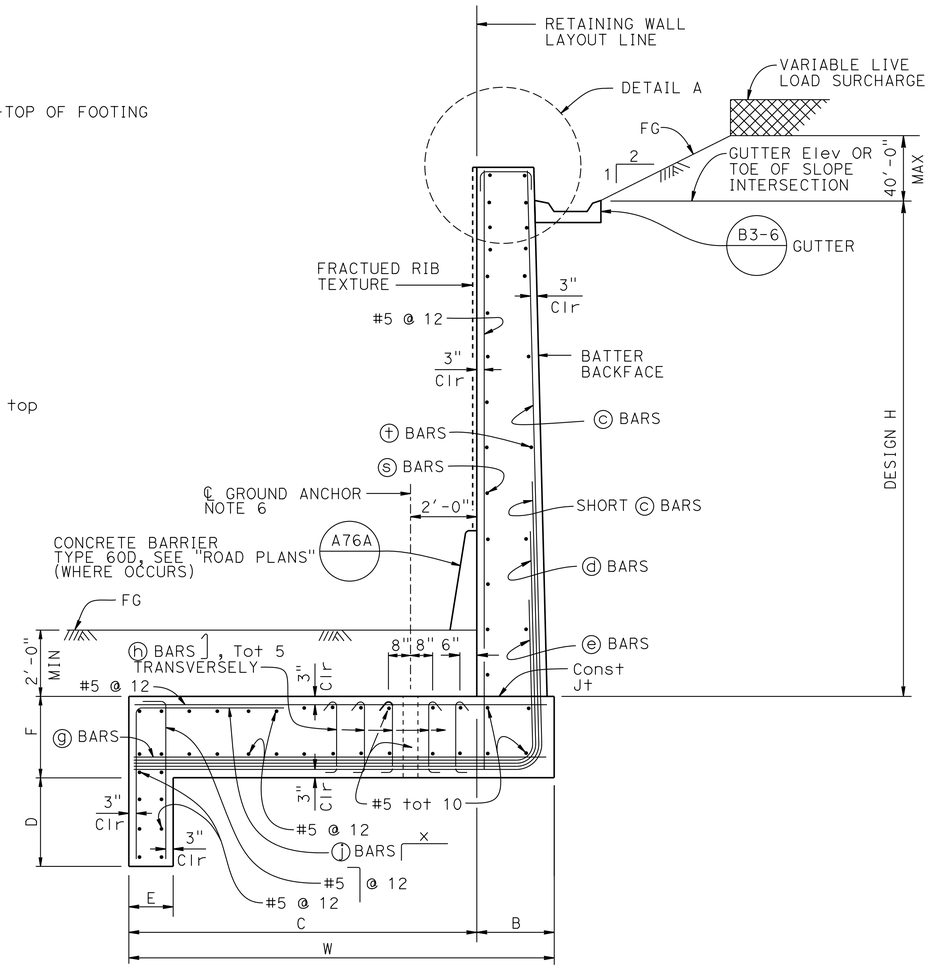

SPREAD FOOTING SECTION
No Scale

DESIGN DATA

Design: AASHTO LRFD Bridge Design Specifications, 4th edition with California Amendments

LS: Varied surcharge on level ground surface

EQE: Trial Wedge Method
K_h = 0.2
K_v = 0.0

Soil: ϕ = 34°
γ = 120 pcf

Reinforced Concrete: f′c = 3600 psi
fy = 60,000 psi

Load Combinations and Limit States

Service I Q=1.00DC+1.00EV+1.00EH+1.00LS+Td

Strength I Q=αDC+βEV+1.50EH+1.75LS+Td

Extreme I Q=1.00DC+1.00EV+1.00EH+1.00EQD+1.00EQE+Td

Where:
- Q: Force Effects
- α: 1.25 or 0.90, Whichever Controls Design
- β: 1.35 or 1.00, whichever Controls Design
- DC: Dead Load of Structure Components
- EV: Vertical Earth Fill Pressure
- LS: Live Load Surcharge
- EQE: Seismic Earth Pressure
- EQD: Soil and Structure Components Inertia. Soil inertia ignored for stem design
- Td: Anchor Design Load

NOTES:

1. For "FRACTURED RIB TEXTURE", see "INDEX TO PLANS" sheet.
2. For details not shown and drainage notes, see RSP B3-5 & B3-6
3. Shift ⓒ bars, ⓓ bars and ⓔ bars as required to clear formed hole for ground anchor.
4. Footing is designed to resist 1.33 Td assuming the maximum anchor spacing shown in the table on "RETAINING WALL TYPE 7 (CASE 2) - DETAILS NO. 2" sheet.
5. For wall dimensions, reinforcing steel and bearing stress data, see table on "RETAINING WALL TYPE 7 (CASE 2) - DETAILS NO. 2" sheet.
6. For ground anchor details, see "VERTICAL GROUND ANCHOR DETAILS NO. 1" and "VERTICAL GROUND ANCHOR DETAILS NO. 2" sheets.

Luqi Yang
DESIGN OVERSIGHT — Luqi Yang
5-15-13
SIGN OFF DATE

	BY	CHECKED
DESIGN	D. Kim	M. Wise
DETAILS	H. Withers	M. Wise
QUANTITIES	J. Quinoveva	D. Kim

PREPARED FOR THE STATE OF CALIFORNIA DEPARTMENT OF TRANSPORTATION

Mohan S. Char
PROJECT ENGINEER

BRIDGE NO. 55E0131
POST MILES 5.52

RETAINING WALL NO. 302R
RETAINING WALL TYPE 7 (CASE 2)-DETAILS NO. 1

DESIGN DETAIL SHEET (ENGLISH) (REV.7/16/10)

ORIGINAL SCALE IN INCHES FOR REDUCED PLANS 0 1 2 3

UNIT:
PROJECT NUMBER & PHASE: 1200020278 CONTRACT NO.: 12-0F96C1

DISREGARD PRINTS BEARING EARLIER REVISION DATES

REVISION DATES: 04-27-12 09-24-12 01-14-13 04-22-13

SHEET 7 OF 13

FILE => RW302R-g-rwdt01.dgn

USERNAME => s124496 DATE PLOTTED => 29-AUG-2013 TIME PLOTTED => 09:29

DIST	COUNTY	ROUTE	POST MILES TOTAL PROJECT	SHEET No	TOTAL SHEETS
12	Ora	5	3.7/6.2	736	780

REGISTERED CIVIL ENGINEER — DATE 4/22/13

8-26-13
PLANS APPROVAL DATE

REGISTERED PROFESSIONAL ENGINEER — MOHAN S. CHAR — No. 57894 — Exp. 6/30/14 — CIVIL — STATE OF CALIFORNIA

The State of California or its officers or agents shall not be responsible for the accuracy or completeness of electronic copies of this plan sheet.

ORANGE COUNTY TRANSPORTATION AUTHORITY
550 SOUTH MAIN STREET
ORANGE, CA 92863-1584

AECOM TECHNICAL SERVICES INC.
999 W. TOWN & COUNTRY ROAD
ORANGE, CALIFORNIA 92868

TABLE OF WALL DIMENSIONS, REINFORCING STEEL AND BEARING STRESS DATA

DESIGN H	10′	12′	14′	16′	18′	20′	22′
W	7′-6"	8′-6"	9′-3"	11′-3"	12′-3"	13′-3"	14′-9"
C	6′-0"	6′-9"	7′-3"	9′-0"	9′-6"	10′-6"	11′-4"
B	1′-6"	1′-9"	2′-0"	2′-3"	2′-9"	2′-9"	3′-5"
F	2′-4"	2′-6"	2′-6"	2′-9"	2′-9"	3′-0"	3′-6"
D (FOOTING KEY DEPTH)	1′-0"	1′-0"	2′-0"	3′-0"	3′-0"	3′-0"	3′-0"
E	1′-0"	1′-0"	1′-3"	1′-6"	1′-6"	1′-6"	1′-6"
STEM THICKNESS AT TOP	1′-3"	1′-7"	1′-9"	2′-0"	2′-0"	2′-0"	2′-0"
BATTER	0	0	0	0	1/4:12	1/4:12	1/2:12
S	0′-8"	0′-8"	0′-7"	0′-6"	0′-8"	0′-7"	0′-6"
ⓒ BARS	#5 ℧	#5 ℧	#5	#5	#5	#5	#5
hsc	8′-9"	9′-0"	11′-6"	12′-6"	13′-6"	14′-6"	16′-0"
ⓓ BARS	#7	#8	#6	#6	#8	#9	#8
hd	5′-9"	6′-0"	9′-6"	10′-6"	11′-6"	12′-6"	13′-9"
ⓔ BARS			#9	#10	#10	#11	#11
he			7′-6"	8′-6"	9′-6"	10′-6"	11′-6"
ⓖ BARS	#5 @ 16	#6 @ 16	#5 @ 14	#5 @ 12	#8 @ 16	#8 @ 14	#8 @ 12
BARS BUNDLED WITH ⓖ in ftg	ⓓ	ⓓ	SHORT ⓒ & ⓔ	SHORT ⓒ & ⓔ	SHORT ⓒ & ⓔ	SHORT ⓒ & ⓔ	SHORT ⓒ & ⓔ
ⓗ BARS		#4 @ 16	#4 @ 14	#4 @ 12	#6 @ 16	#6 @ 14	#6 @ 12
ⓙ BARS	#5 @ 12	#5 @ 12	#6 @ 12	#6 @ 12	#6 @ 12	#6 @ 12	#6 @ 12
x	3′-6"	4′-0"	4′-6"	5′-0"	5′-6′	6′-0"	6′-6"
ⓢ BARS	#5 @ 15	#5 @ 12	#5 @ 12	#6 @ 12	#6 @ 12	#6 @ 12	#6 @ 12
ⓣ BARS	#4 @ 18	#4 @ 12	#4 @ 12	#4 @ 12	#4 @ 12	#4 @ 12	#5 @ 12
Td (KIPS/FT)	7.50	9.0	11.25	9.0	11.25	16.50	20.25
To (KIPS/FT)	7.50	9.0	11.25	9.0	11.25	16.50	20.25
Tp = Larger of 1.33 Td & 1.25 To (KIPS/FT)	10.0	12.0	15.0	12.0	15.0	22.0	27.0
MAX. ANCHOR SPACING	9′-6"	7′-9"	6′-3"	7′-9"	6′-3"	6′-3"	6′-3"
SER I: B′(ft), q'_0 (ksf)	6.5, 1.3	7.5, 1.2	8.0, 1.4	10.7, 0.7	11.0, 0.8	12.9, 0.8	15.0, 0.8
STR Ia: B′(ft), q_0(ksf)	5.9, 3.3	6.8, 3.5	7.2, 4.1	9.6, 3.4	9.8, 4.0	11.6, 4.3	13.6, 4.6
STR, Ib: B′(ft), q_0(ksf)	5.5, 3.1	6.3, 3.4	6.5, 4.0	8.8, 3.2	8.9, 3.9	10.9, 4.1	12.6, 4.3
Ext I: B′(ft), q_0(ksf)	4.1, 4.2	4.4, 5.0	4.4, 6.1	5.3, 5.5	5.3, 6.8	6.5, 7.0	7.4, 7.6

NOTE:
ⓗ Bar spacing shown is along the length of the retaining wall.

LEGEND:
SER: service limit state
STR: strength limit state
EXT: extreme event limit state
B′: effective footing width (ft)
q'_0: net bearing stress (ksf)
q_0: gross uniform bearing stress (ksf)
℧: 2 bar bundle
To: Anchor Lockoff Load
Tp: Anchor Factored Test Load

Luqi Yang
DESIGN OVERSIGHT Luqi Yang
5-15-13
SIGN OFF DATE

	BY	CHECKED
DESIGN	D. Kim	M. Wise
DETAILS	H. Withers	M. Wise
QUANTITIES	J. Quinoveva	D. Kim

PREPARED FOR THE STATE OF CALIFORNIA DEPARTMENT OF TRANSPORTATION

Mohan S. Char
PROJECT ENGINEER

BRIDGE NO. 55E0131
POST MILES 5.52

RETAINING WALL NO. 302R
RETAINING WALL TYPE 7 (CASE 2)-DETAILS NO. 2

DESIGN DETAIL SHEET (ENGLISH) (REV.7/16/10)

ORIGINAL SCALE IN INCHES FOR REDUCED PLANS 0 1 2 3

UNIT:
PROJECT NUMBER & PHASE: 1200020278
CONTRACT NO.: 12-0F96C1

DISREGARD PRINTS BEARING EARLIER REVISION DATES → REVISION DATES 04-27-12 09-24-12 01-14-13 04-22-13

SHEET 8 OF 13

FILE => RW302R-g-rwdt02.dgn

USERNAME => s124496 DATE PLOTTED => 29-AUG-2013 TIME PLOTTED => 09:29

DIST	COUNTY	ROUTE	POST MILES TOTAL PROJECT	SHEET No.	TOTAL SHEETS
12	Ora	5	3.7/6.2	737	780

REGISTERED CIVIL ENGINEER 4/22/13 DATE

8-26-13
PLANS APPROVAL DATE

REGISTERED PROFESSIONAL ENGINEER Mohan S. Char No. 57894 Exp. 6/30/14 CIVIL STATE OF CALIFORNIA

The State of California or its officers or agents shall not be responsible for the accuracy or completeness of electronic copies of this plan sheet.

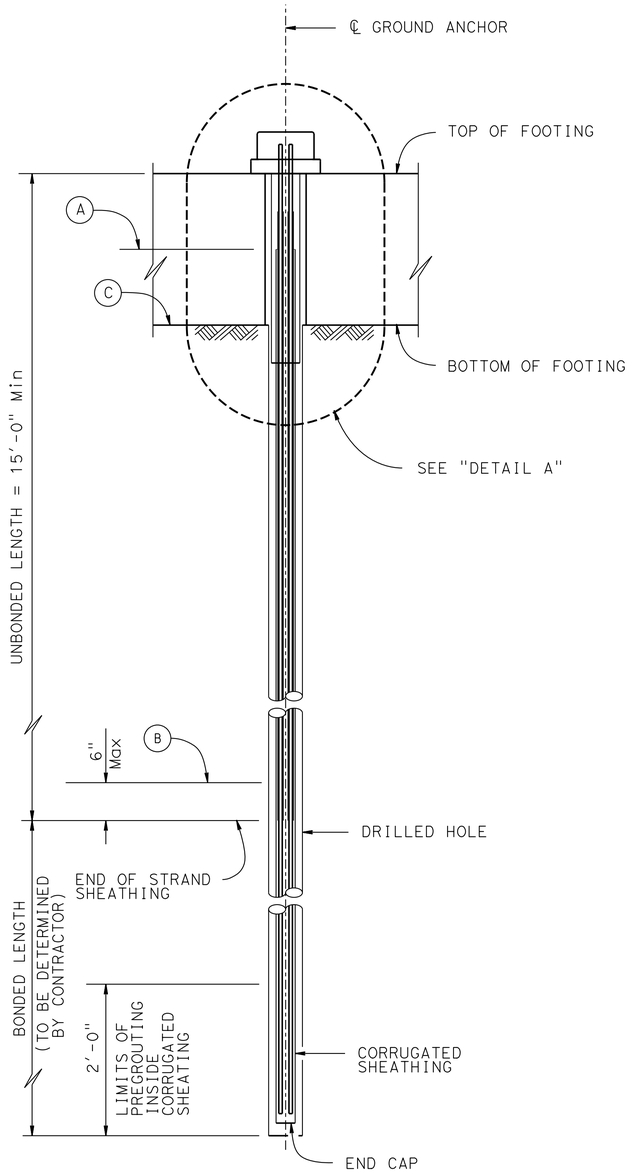

① GROUND ANCHOR TENDON DETAILS (STRANDS)

1"= 1'-0"

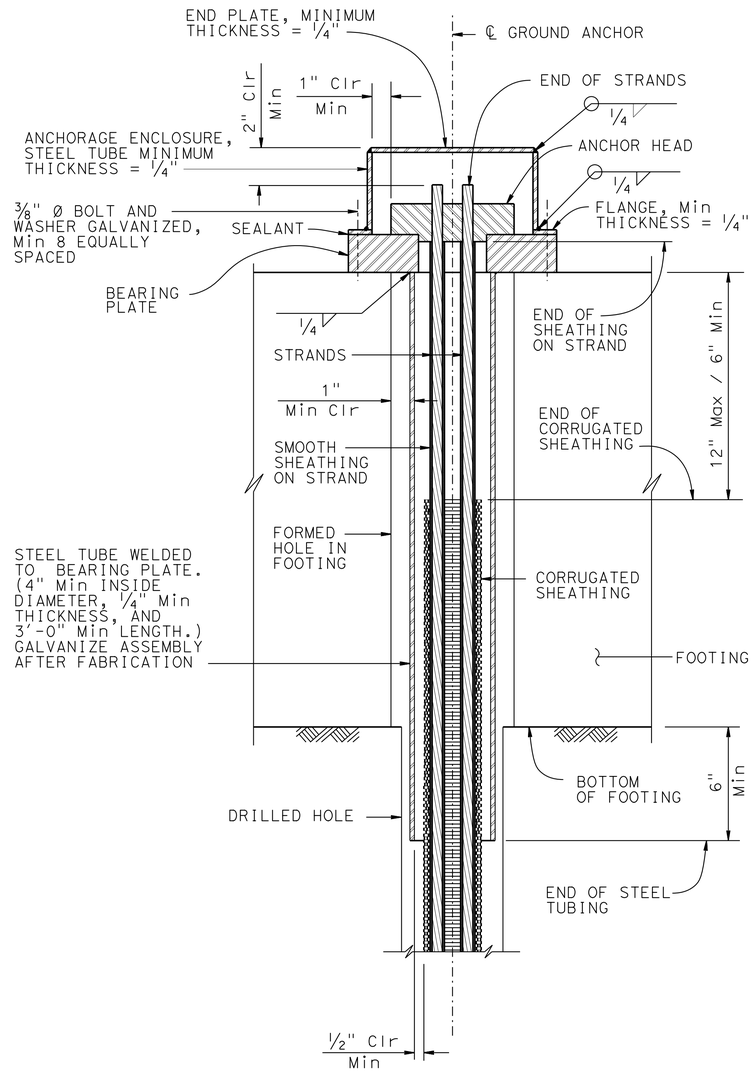

DETAIL A

3" = 1'-0"

GENERAL NOTES

DESIGN: AASHTO LRFD Bridge Design Specifications, 4th edition with California Amendments.

PRESTRESSING STEEL (GROUND ANCHORS):

STRANDS - ASTM Designation: A416
Tp = Factored test load per tendon (Kips)
fpu = Minimum tensile strength of prestressing steel (ksi)

As = Minimum cross sectional area of prestressing steel in tendon (square inches)

$$As\ (Min) = \frac{1.0\ Tp}{0.75\ fpu} \quad \text{(Strand)}$$

NOTES:

1. Anchorage enclosure shall have provisions to allow injecting grout at low end and venting at high end. Galvanize enclosure after fabrication.
2. Alternative anchor enclosure shown on sheet "VERTICAL GROUND ANCHOR DETAILS No. 2" sheet

(A) Level of initial grouting inside corrugated sheathing

(B) Level of initial grouting in drilled hole

(C) Level of secondary grouting in drilled hole

SPECIAL DETAILS

REVISED STANDARD DRAWING

FILE NO. xs12-030-1

APPROVAL DATE July 2011

① REVISED DETAIL

STATE OF CALIFORNIA DEPARTMENT OF TRANSPORTATION

DIVISION OF ENGINEERING SERVICES

BRIDGE NO. 55E0131

POST MILE 5.52

RETAINING WALL 302R

VERTICAL GROUND ANCHOR DETAILS NO. 1

DS OSD 2147A (ENGLISH STANDARD DRAWING "XS" BORDER REV. (02-02-11)

ORIGINAL SCALE IN INCHES FOR REDUCED PLANS 0 1 2 3

UNIT:
PROJECT NUMBER & PHASE: 1200020278

CONTRACT NO.: 12-0F96C1

DISREGARD PRINTS BEARING EARLIER REVISION DATES

REVISION DATES 04-27-12 09-24-12 01-14-13 04-22-13

SHEET 9 OF 13

FILE => RW302R-g-rwdt03.dgn

USERNAME => s124496 DATE PLOTTED => 29-AUG-2013 TIME PLOTTED => 09:29

DIST	COUNTY	ROUTE	POST MILES TOTAL PROJECT	SHEET No.	TOTAL SHEETS
12	Ora	5	3.7/6.2	738	780

REGISTERED CIVIL ENGINEER — DATE 4/22/13

8-26-13
PLANS APPROVAL DATE

REGISTERED PROFESSIONAL ENGINEER — Mohan S. Char — No. 57894 — Exp. 6/30/14 — CIVIL — STATE OF CALIFORNIA

The State of California or its officers or agents shall not be responsible for the accuracy or completeness of electronic copies of this plan sheet.

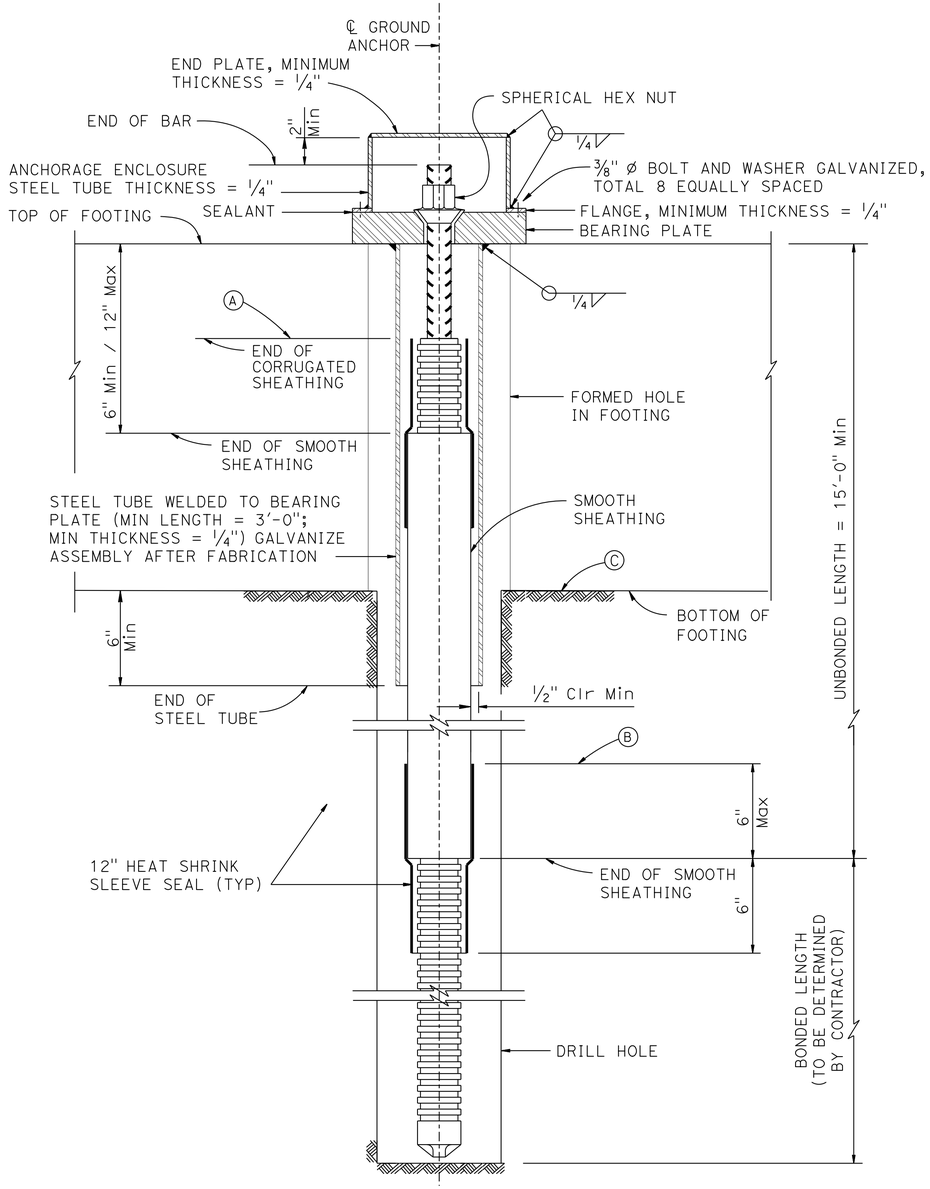

GROUND ANCHOR TENDON DETAILS (BAR)

1

3" = 1'-0"

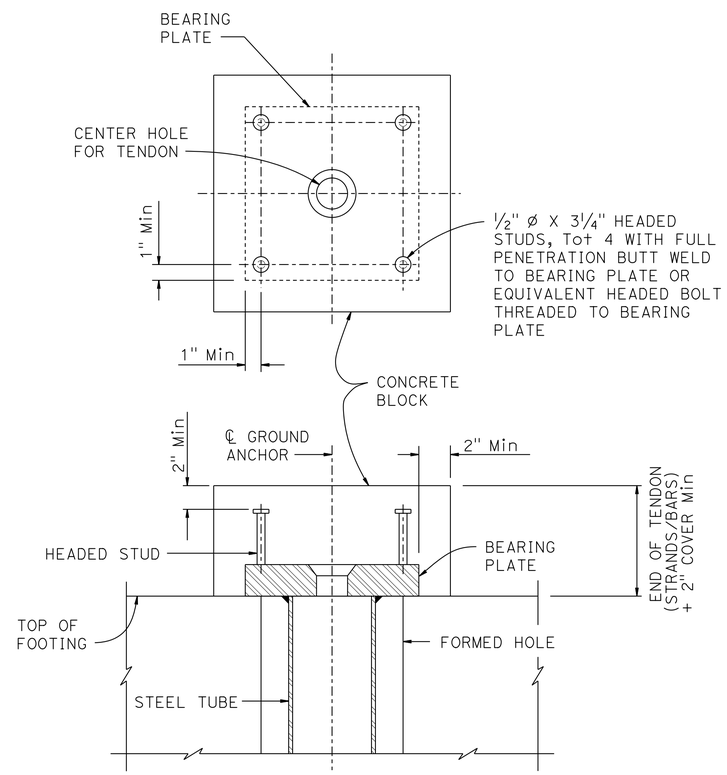

ANCHOR ENCLOSURE (ALTERNATIVE)

3" = 1'-0"

GENERAL NOTES

DESIGN: AASHTO LRFD Bridge Design Specifications, 4th edition with California Amendments.

PRESTRESSING STEEL (GROUND ANCHORS):

BARS - ASTM Designation: A722 Type II
Tp = Factored test load per tendon (Kips)
fpu = Minimum tensile strength of prestressing steel (ksi)

As = Minimum cross sectional area of prestressing steel in tendon (square inches)

$$As\ (Min) = \frac{1.0\ Tp}{0.75\ fpu} \quad (Bar)$$

NOTES:

Anchorage enclosure shall have provision to allow injecting grout at low end and venting at high end. Galvanize enclosure after fabrication.

(A) Level of initial grouting inside corrugated sheathing

(B) Level of initial grouting in drilled hole

(C) Level of secondary grouting in drilled hole

SPECIAL DETAILS

REVISED STANDARD DRAWING

FILE NO. xs12-030-2

APPROVAL DATE July 2011

1 REVISED DETAIL

STATE OF CALIFORNIA DEPARTMENT OF TRANSPORTATION

DIVISION OF ENGINEERING SERVICES

BRIDGE NO. 55E0131

POST MILE 5.52

RETAINING WALL 302R

VERTICAL GROUND ANCHOR DETAILS NO. 2

DS OSD 2147A (ENGLISH STANDARD DRAWING "XS" BORDER REV. (02-02-11)

ORIGINAL SCALE IN INCHES FOR REDUCED PLANS 0 1 2 3

UNIT:
PROJECT NUMBER & PHASE: 1200020278

CONTRACT NO.: 12-0F96C1

DISREGARD PRINTS BEARING EARLIER REVISION DATES

REVISION DATES 04-27-12 09-24-12 01-14-13 04-22-13

SHEET 10 OF 13

FILE => RW302R-g-rwdt04.dgn

USERNAME => s124496 DATE PLOTTED => 29-AUG-2013 TIME PLOTTED => 09:29

DIST	COUNTY	ROUTE	POST MILES TOTAL PROJECT	SHEET No	TOTAL SHEETS
12	Ora	5	3.7/6.2	739	780

REGISTERED CIVIL ENGINEER — 4/22/13 DATE

8-26-13
PLANS APPROVAL DATE

REGISTERED PROFESSIONAL ENGINEER — MOHAN S. CHAR No. 57894 Exp. 6/30/14 CIVIL — STATE OF CALIFORNIA

The State of California or its officers or agents shall not be responsible for the accuracy or completeness of electronic copies of this plan sheet.

ORANGE COUNTY TRANSPORTATION AUTHORITY
550 SOUTH MAIN STREET
ORANGE, CA 92863-1584

AECOM TECHNICAL SERVICES INC.
999 W. TOWN & COUNTRY ROAD
ORANGE, CALIFORNIA 92868

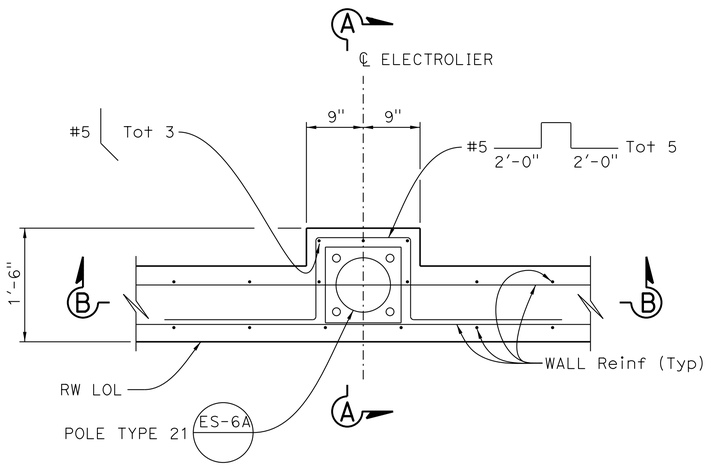

PLAN
1" = 1'-0"

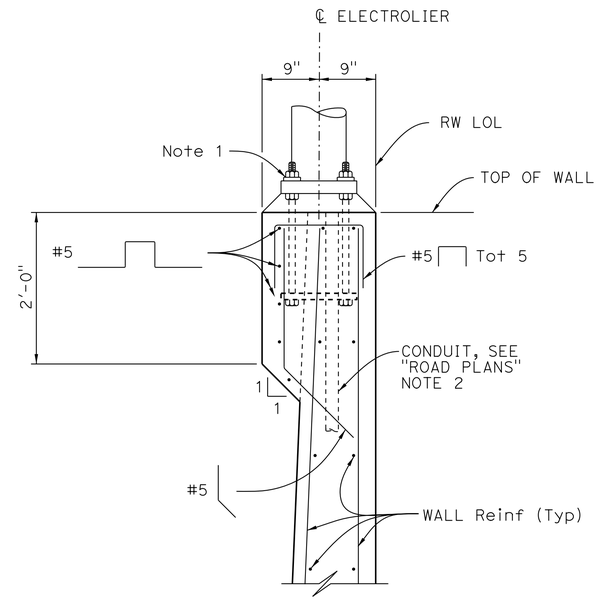

SECTION A-A
1" = 1'-0"

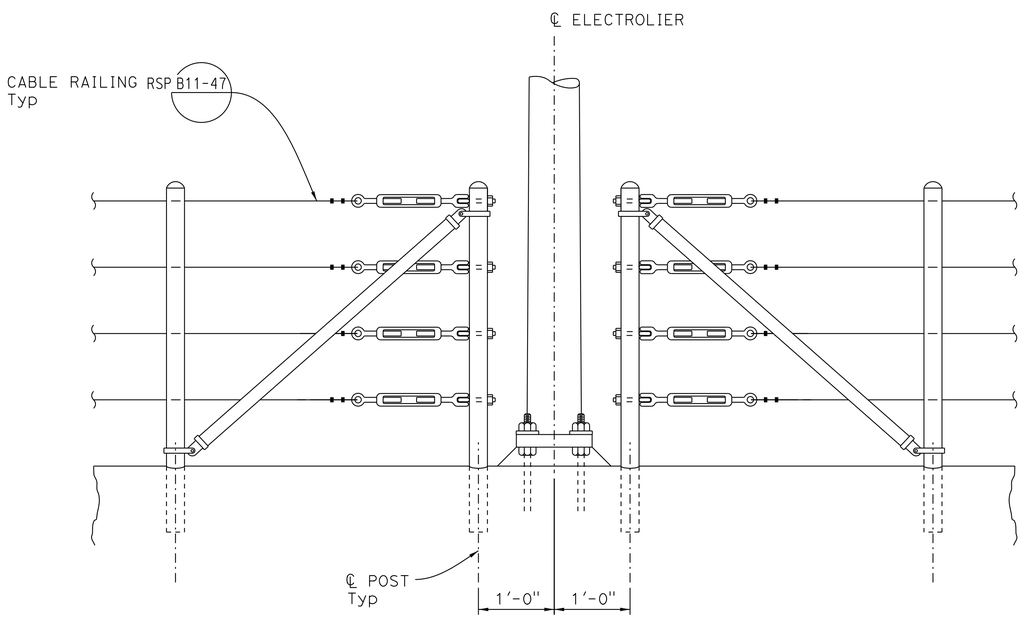

SECTION B-B
1" = 1'-0"

NOTES:

1. For electrolier anchorage details, see ES-6B
2. For pull box details, see ES-9D

Luqi Yang
DESIGN OVERSIGHT — Luqi Yang
5-15-13
SIGN OFF DATE

	BY	CHECKED
DESIGN	D. Kim	C. Weber
DETAILS	H. Withers	C. Weber
QUANTITIES	J. Quinoveva	D. Kim

PREPARED FOR THE STATE OF CALIFORNIA DEPARTMENT OF TRANSPORTATION

Mohan S. Char
PROJECT ENGINEER

BRIDGE NO. 55E0131
POST MILES 5.52

RETAINING WALL NO. 302R
ELECTROLIER PEDESTAL DETAILS

DESIGN DETAIL SHEET (ENGLISH) (REV.7/16/10)

ORIGINAL SCALE IN INCHES FOR REDUCED PLANS 0 1 2 3

UNIT:
PROJECT NUMBER & PHASE: 1200020278 CONTRACT NO.: 12-0F96C1

DISREGARD PRINTS BEARING EARLIER REVISION DATES → REVISION DATES 04-27-12 09-24-12 01-14-13 04-22-13

SHEET 11 OF 13

FILE => RW302R-g-rwdt05.dgn

USERNAME => s124496 DATE PLOTTED => 29-AUG-2013 TIME PLOTTED => 09:29

DIST	COUNTY	ROUTE	POST MILES TOTAL PROJECT	SHEET No	TOTAL SHEETS
12	Ora	5	3.7/6.2	740	780

REGISTERED ENGINEER — 4/22/13 DATE

8-26-13
PLANS APPROVAL DATE

REGISTERED PROFESSIONAL ENGINEER — A. KORKOS NO. GE 2357 EXP. 3-31-14 GEOTECHNICAL — STATE OF CALIFORNIA

The State of California or its officers or agents shall not be responsible for the accuracy or completeness of electronic copies of this plan sheet.

ORANGE COUNTY TRANSPORTATION AUTHORITY
550 SOUTH MAIN STREET
ORANGE, CA 92863-1584

EARTH MECHANICS, INC.
17800 NEWHOPE STREET, SUITE B
FOUNTAIN VALLEY, CA 92708

BENCH MARK

DESIGNATION: 3SS-2-82 ELEV 95.558′

DESCRIBED BY OCS 2003 - FOUND 3¾" OCS ALUMINUM BENCH MARK DISK STAMPED "3SS-2-82", SET IN THE SOUTHEASTERLY CORNER OF A 4 FT. BY 4.5 FT. CONCRETE CATCH BASIN. MONUMENT IS LOCATED ALONG THE NORTHWESTERLY SIDE OF AVENIDA VAQUERO, 100 FT. NORTHERLY OF THE NORTHERLY EDGE OF THE SAN DIEGO FREEWAY OVERCROSSING OF AVENIDA VAQUERO, 23 FT. WESTERLY OF THE CENTERLINE OF VAQUERO AND 29.2 FT. SOUTHERLY OF A STREET STANDARD NO NUMBER. MONUMENT IS SET LEVEL WITH THE TOP OF THE CURB.

NOTES:

(1) This LOTB sheet was prepared in accordance with the Caltrans Soil and Rock Logging, Classification and Presentation Manual (June 2010).

(2) 2.4" samples were taken using a California Modified Sampler.

(3) An automatic trip hammer system consisting of a hammer weight of 140 lbs falling a distance of 30" was used to advance the drive sampler.

(4) Conversion factor from 2.4" Modified California Ring Sampler blowcounts to Standard Penetration Test (SPT) blowcounts is 0.5.

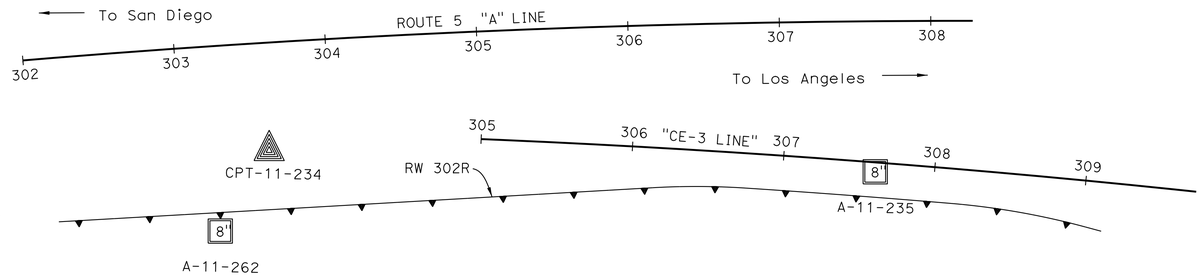

PLAN

1" = 50′

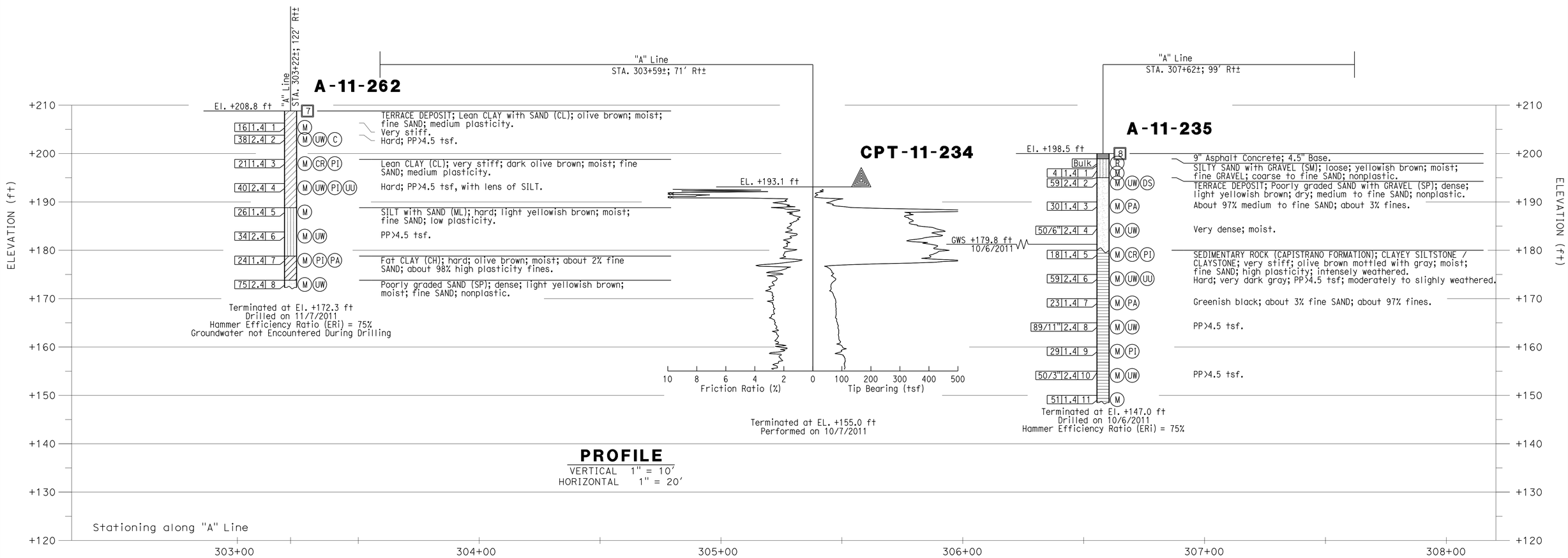

PROFILE

VERTICAL 1" = 10′
HORIZONTAL 1" = 20′

Luqi Yang — DESIGN OVERSIGHT Luqi Yang — 5-15-13 SIGN OFF DATE	DRAWN BY	J. FANG	R. JIE — FIELD INVESTIGATION BY:	PREPARED FOR THE STATE OF CALIFORNIA DEPARTMENT OF TRANSPORTATION	A. KORKOS — PROJECT ENGINEER	BRIDGE NO. 55E0131	RETAINING WALL NO. 302R
	CHECKED BY	G. J. GUNARANJAN	DATE: 9/2011, 10/2011			POST MILES 5.52	LOG OF TEST BORINGS NO. 1 OF 2

GS GEOTECHNICAL LOG OF TEST BORINGS SHEET (ENGLISH) (REV. 7/16/10)

ORIGINAL SCALE IN INCHES FOR REDUCED PLANS 0 1 2 3

UNIT:
PROJECT NUMBER & PHASE: 12000202781

DISREGARD PRINTS BEARING EARLIER REVISION DATES → 04-27-12 09-24-12 01-14-13 04-22-13

SHEET 12 OF 13

FILE => RW302R-z-lotb1-01.dgn

CONTRACT NO.: 12-0F96C1 PROJECT ID: 1200020278

USERNAME => s124496 DATE PLOTTED => 29-AUG-2013 TIME PLOTTED => 09:29

DIST	COUNTY	ROUTE	POST MILES TOTAL PROJECT	SHEET No	TOTAL SHEETS
12	Ora	5	3.7/6.2	741	780

REGISTERED ENGINEER — 4/22/13 DATE

8-26-13
PLANS APPROVAL DATE

REGISTERED PROFESSIONAL ENGINEER — A. KORKOS NO. GE 2357 EXP. 3-31-14 GEOTECHNICAL — STATE OF CALIFORNIA

The State of California or its officers or agents shall not be responsible for the accuracy or completeness of electronic copies of this plan sheet.

ORANGE COUNTY TRANSPORTATION AUTHORITY
550 SOUTH MAIN STREET
ORANGE, CA 92863-1584

EARTH MECHANICS, INC.
17800 NEWHOPE STREET, SUITE B
FOUNTAIN VALLEY, CA 92708

BENCH MARK

DESIGNATION: 3SS-2-82 ELEV 95.558′

DESCRIBED BY OCS 2003 - FOUND 3¾" OCS ALUMINUM BENCH MARK DISK STAMPED "3SS-2-82", SET IN THE SOUTHEASTERLY CORNER OF A 4 FT. BY 4.5 FT. CONCRETE CATCH BASIN. MONUMENT IS LOCATED ALONG THE NORTHWESTERLY SIDE OF AVENIDA VAQUERO, 100 FT. NORTHERLY OF THE NORTHERLY EDGE OF THE SAN DIEGO FREEWAY OVERCROSSING OF AVENIDA VAQUERO, 23 FT. WESTERLY OF THE CENTERLINE OF VAQUERO AND 29.2 FT. SOUTHERLY OF A STREET STANDARD NO NUMBER. MONUMENT IS SET LEVEL WITH THE TOP OF THE CURB.

NOTES:

(1) This LOTB sheet was prepared in accordance with the Caltrans Soil and Rock Logging, Classification and Presentation Manual (June 2010)

(2) 2.4" samples were taken using a California Modified Sampler.

(3) An automatic trip hammer system consisting of a hammer weight of 140 lbs falling a distance of 30" was used to advance the drive sampler.

(4) Conversion factor from 2.4" Modified California Ring Sampler blowcounts to Standard Penetration Test (SPT) blowcounts is 0.5.

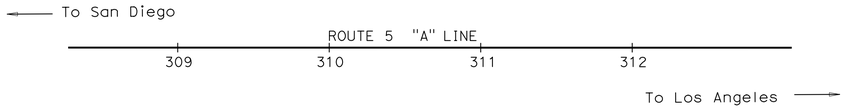

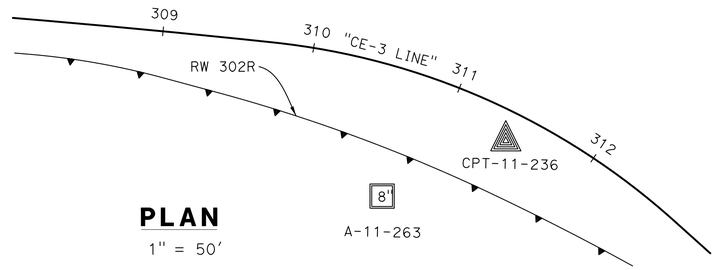

PLAN
1" = 50′

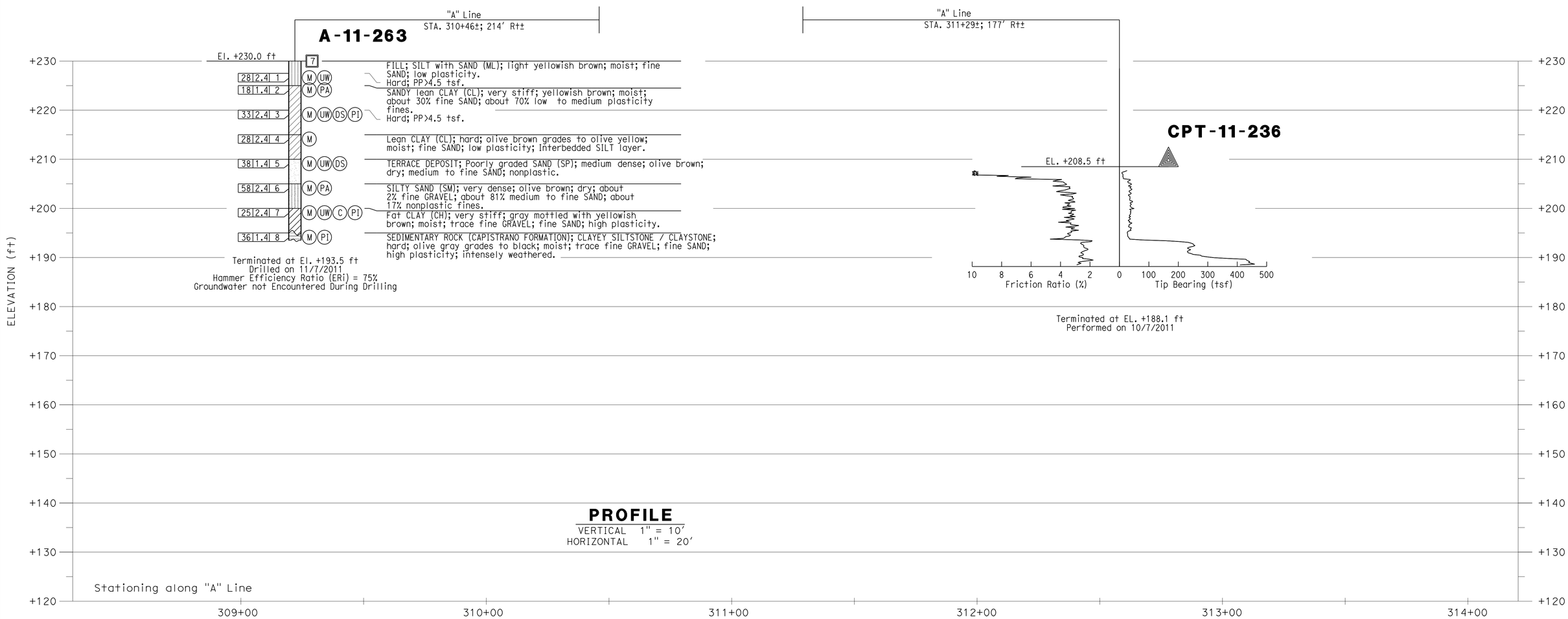

PROFILE
VERTICAL 1" = 10′
HORIZONTAL 1" = 20′

Luqi Yang — DESIGN OVERSIGHT Luqi Yang; 5-15-13 SIGN OFF DATE	DRAWN BY J. FANG	R. JIE — FIELD INVESTIGATION BY:	PREPARED FOR THE STATE OF CALIFORNIA DEPARTMENT OF TRANSPORTATION	A. KORKOS — PROJECT ENGINEER	BRIDGE NO. 55E0131; POST MILES 5.52
	CHECKED BY G. J. GUNARANJAN	DATE: 9/2011, 10/2011			

RETAINING WALL NO. 302R
LOG OF TEST BORINGS NO. 2 OF 2

GS GEOTECHNICAL LOG OF TEST BORINGS SHEET (ENGLISH) (REV. 7/16/10)

ORIGINAL SCALE IN INCHES FOR REDUCED PLANS 0 1 2 3

UNIT:
PROJECT NUMBER & PHASE: 12000202781

DISREGARD PRINTS BEARING EARLIER REVISION DATES

REVISION DATES: 06-21-12 09-24-12 01-14-13 04-22-13

SHEET 13 OF 13

FILE => RW302R-z-lotb1-02.dgn

CONTRACT NO.:12-0F96C1 PROJECT ID:1200020278

USERNAME => s124496 DATE PLOTTED => 29-AUG-2013 TIME PLOTTED => 09:23

DIST	COUNTY	ROUTE	POST MILES TOTAL PROJECT	SHEET No	TOTAL SHEETS
12	Ora	5	3.7/6.2	742	780

REGISTERED CIVIL ENGINEER 4/22/13 DATE

8-26-13
PLANS APPROVAL DATE

REGISTERED PROFESSIONAL ENGINEER MOHAN S. CHAR No. 57894 Exp. 6/30/14 CIVIL STATE OF CALIFORNIA

The State of California or its officers or agents shall not be responsible for the accuracy or completeness of electronic copies of this plan sheet.

ORANGE COUNTY TRANSPORTATION AUTHORITY
550 SOUTH MAIN STREET
ORANGE, CA 92863-1584

AECOM TECHNICAL SERVICES INC.
999 W. TOWN & COUNTRY ROAD
ORANGE, CALIFORNIA 92868

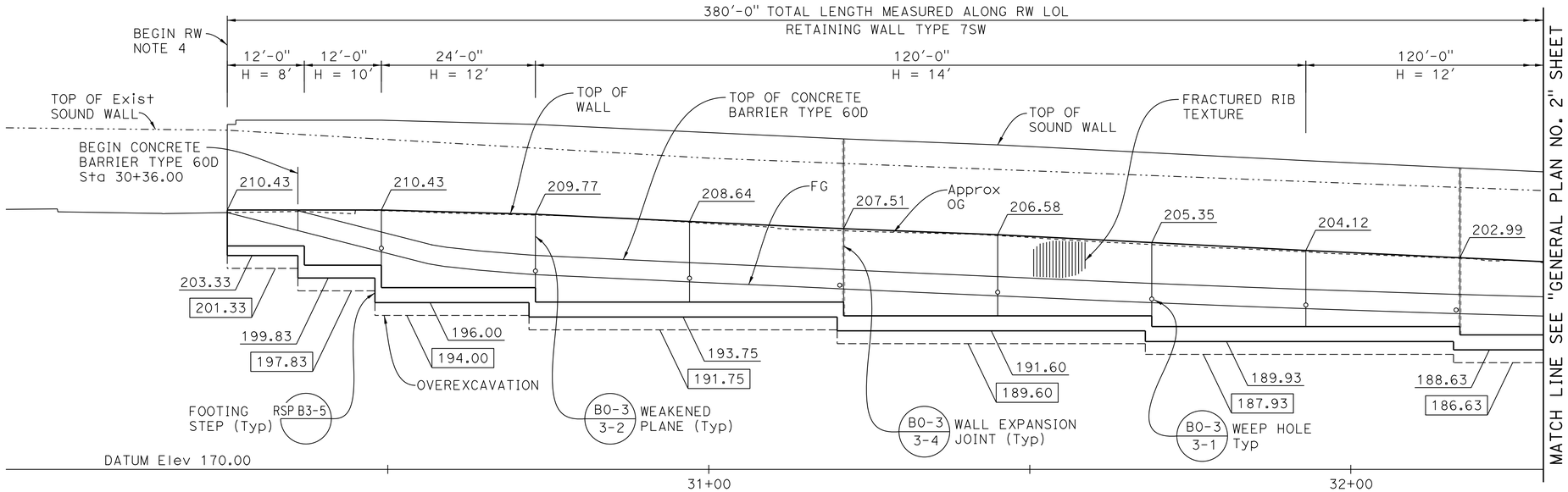

DEVELOPED MIRROR ELEVATION

1" = 10'

CURVE DATA				
No.	R	Δ	L	T
1	447.50'	7°25'13"	57.95'	29.02'
2	2000.00'	13°04'47"	456.57'	229.28'

NOTES:

1. All wall expansion joints, weakened planes and footing steps occur at intervals of 24'-0" unless shown otherwise.
2. For "INDEX TO PLANS" and "LEGEND", see "INDEX TO PLANS" sheet.
3. For "TYPICAL SECTION", see "GENERAL PLAN NO. 2" sheet.
4. Top of sound wall to match top of existing sound wall.

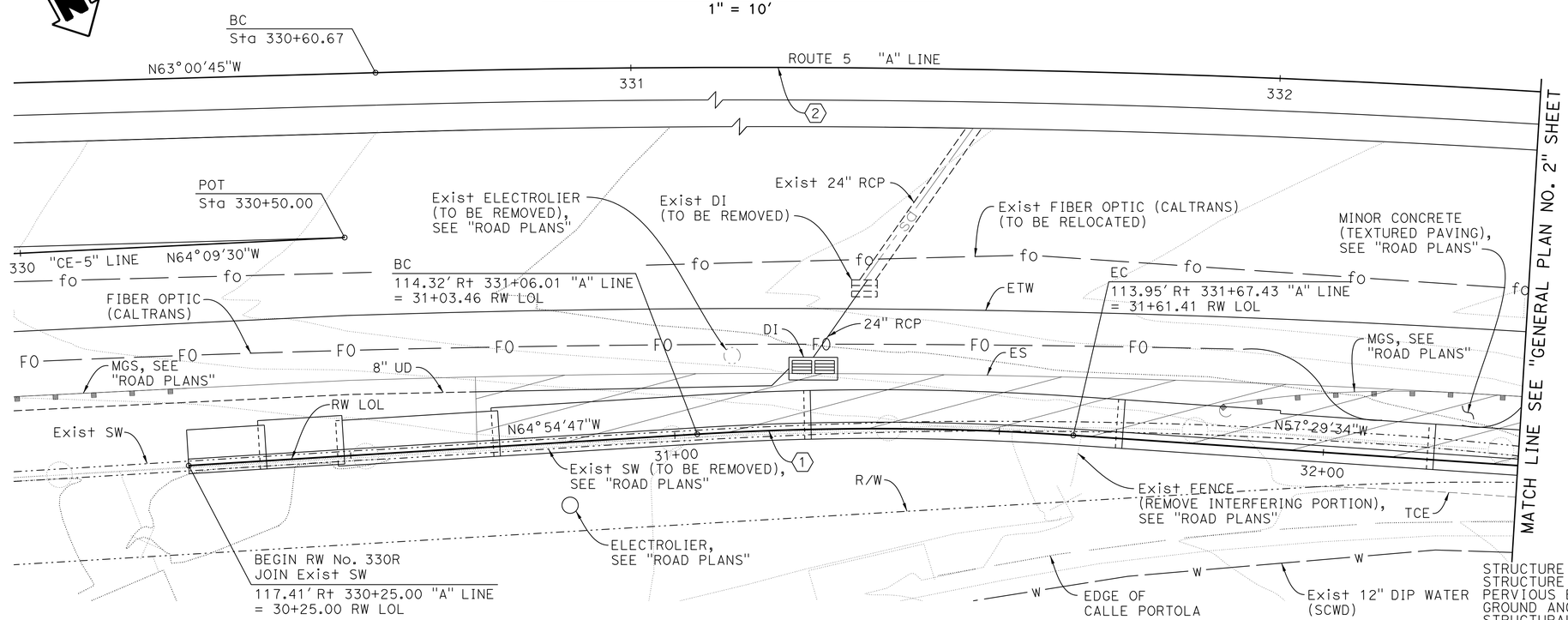

PLAN

1" = 10'

RETAINING WALL NO. 330R QUANTITIES

STRUCTURE EXCAVATION (RETAINING WALL)	1,530	CY
STRUCTURE BACKFILL (RETAINING WALL)	1,005	CY
PERVIOUS BACKFILL MATERIAL (RETAINING WALL)	90	CY
GROUND ANCHOR (VERTICAL)	28	EA
STRUCTURAL CONCRETE, RETAINING WALL	445	CY
FRACTURED RIB TEXTURE	1,870	SQFT
BAR REINFORCING STEEL (RETAINING WALL)	49,260	LB
SOUND WALL (MASONRY BLOCK)	5,320	SQFT

NOTE:
THE CONTRACTOR SHALL VERIFY ALL CONTROLLING FIELD DIMENSIONS BEFORE ORDERING OR FABRICATING ANY MATERIAL.

Luqi Yang
DESIGN OVERSIGHT Luqi Yang
5-15-13
SIGN OFF DATE

	BY	CHECKED
DESIGN	J. Quinoveva	C. Weber
DETAILS	J. Quinoveva	C. Weber
QUANTITIES	J. Quinoveva	D. Kim

LOAD & RESISTANCE FACTOR DESIGN — LIVE LOADING: HL93 W/"LOW-BOY"; PERMIT DESIGN VEHICLE

	BY	CHECKED
LAYOUT	J. Quinoveva	C. Weber
SPECIFICATIONS	M. Char	PLANS AND SPECS COMPARED M. Char

PREPARED FOR THE STATE OF CALIFORNIA DEPARTMENT OF TRANSPORTATION

Mohan S. Char
PROJECT ENGINEER

BRIDGE NO. 55E0154
POST MILES 6.05

RETAINING WALL NO. 330R
GENERAL PLAN NO. 1

DESIGN GENERAL PLAN SHEET (ENGLISH) (REV.7/16/10)

ORIGINAL SCALE IN INCHES FOR REDUCED PLANS 0 1 2 3

UNIT:
PROJECT NUMBER & PHASE: 1200020278 CONTRACT NO.: 12-0F96C1

DISREGARD PRINTS BEARING EARLIER REVISION DATES

REVISION DATES: 04-27-12 09-24-12 01-14-13 04-22-13

SHEET 1 OF 11

FILE => RW330R-a-gp01.dgn

USERNAME => s124496 DATE PLOTTED => 29-AUG-2013 TIME PLOTTED => 09:46

DIST	COUNTY	ROUTE	POST MILES TOTAL PROJECT	SHEET No	TOTAL SHEETS
12	Ora	5	3.7/6.2	743	780

REGISTERED CIVIL ENGINEER — DATE 4/22/13

8-26-13
PLANS APPROVAL DATE

REGISTERED PROFESSIONAL ENGINEER — MOHAN S. CHAR — No. 57894 — Exp. 6/30/14 — CIVIL — STATE OF CALIFORNIA

The State of California or its officers or agents shall not be responsible for the accuracy or completeness of electronic copies of this plan sheet.

ORANGE COUNTY TRANSPORTATION AUTHORITY
550 SOUTH MAIN STREET
ORANGE, CA 92863-1584

AECOM TECHNICAL SERVICES INC.
999 W. TOWN & COUNTRY ROAD
ORANGE, CALIFORNIA 92868

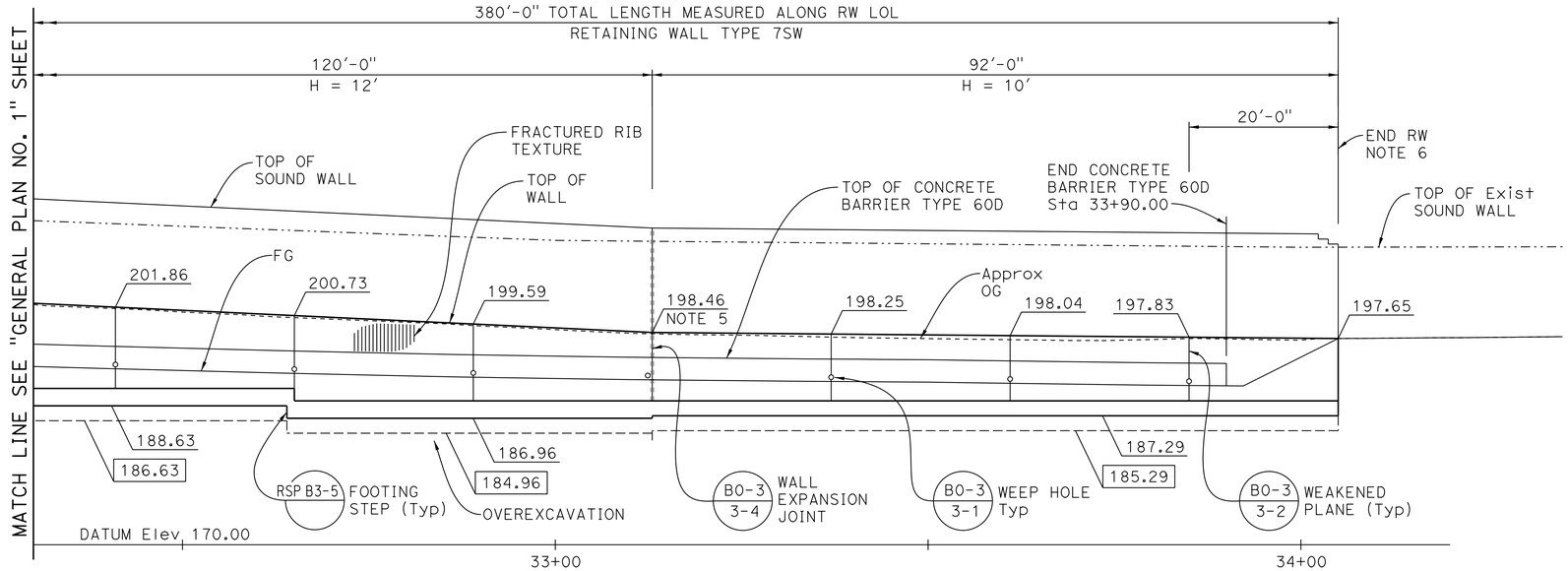

DEVELOPED MIRROR ELEVATION

1" = 10'

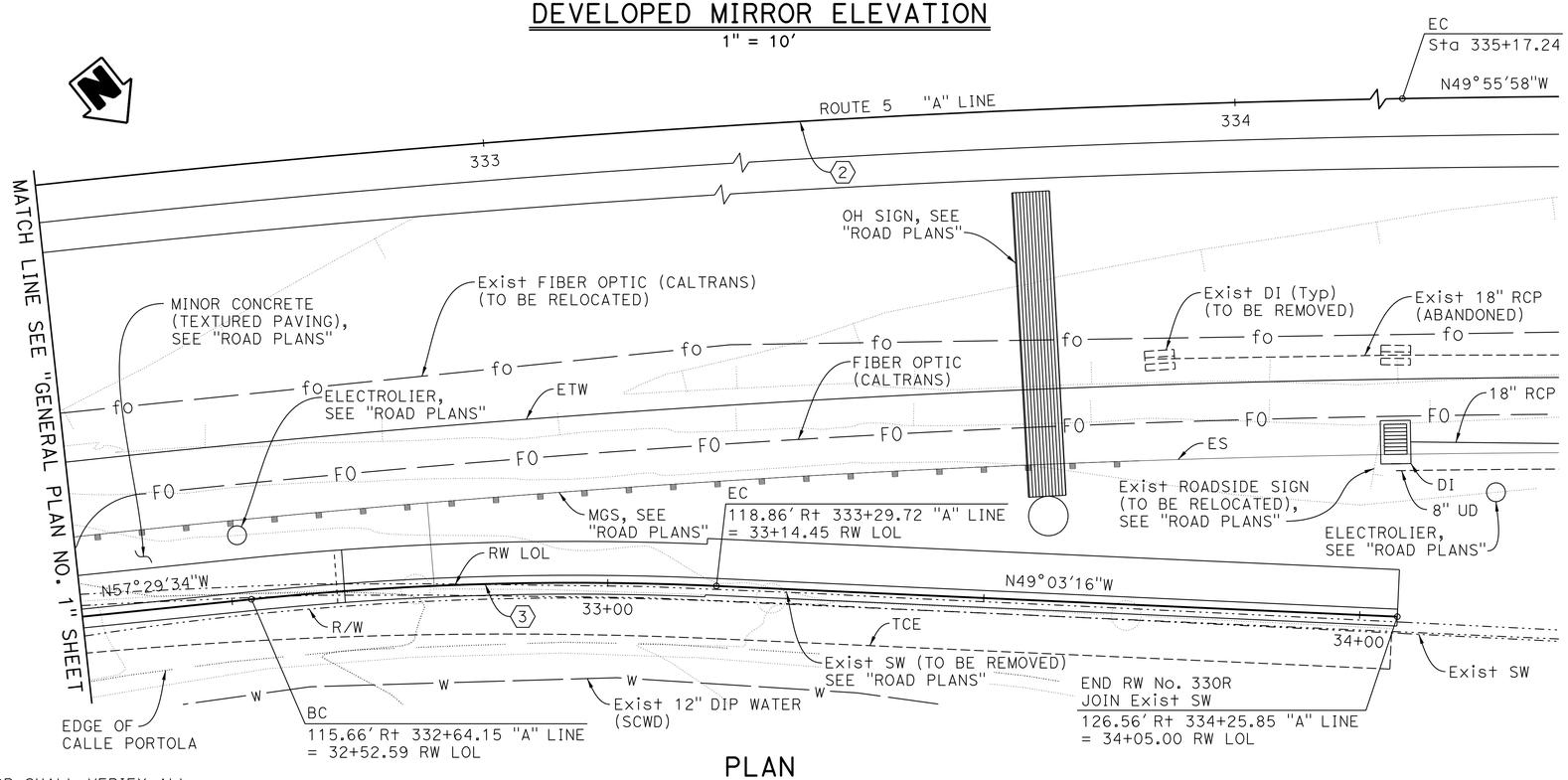

PLAN

1" = 10'

CURVE DATA				
No.	R	Δ	L	T
2	2000.00'	13°04'47"	456.57'	229.28'
3	420.00'	8°26'18"	61.86'	30.98'

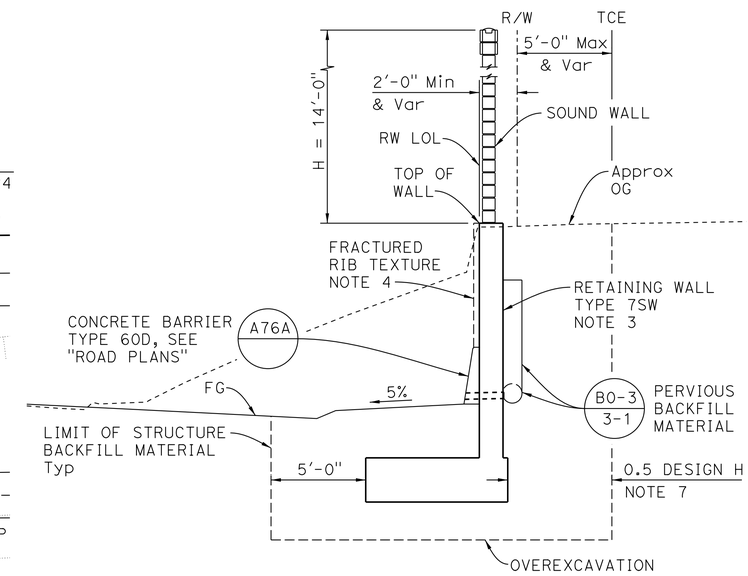

TYPICAL SECTION

1/4" = 1'-0"

NOTES:
1. All wall expansion joints, weakened planes and footing steps occur at intervals of 24'-0" unless shown otherwise.
2. For "INDEX TO PLANS" and "LEGEND", see "INDEX TO PLANS" sheet.
3. For Retaining Wall Type 7SW details, see "RETAINING WALL TYPE 7SW-DETAILS NO. 1", "VERTICAL GROUND ANCHOR DETAILS NO. 1" and "VERTICAL GROUND DETAILS NO. 2" sheet.
4. For "FRACTURED RIB TEXTURE", see "INDEX TO PLANS" sheet.
5. Construct 20'-0" VC at slope change per RSP B3-5
6. Top of sound wall to match top of exist sound wall.
7. Limit of Structure Backfill Material shall not extend beyond TCE.

NOTE:
THE CONTRACTOR SHALL VERIFY ALL CONTROLLING FIELD DIMENSIONS BEFORE ORDERING OR FABRICATING ANY MATERIAL.

DESIGN OVERSIGHT Luqi Yang, 5-15-13 SIGN OFF DATE	DESIGN	BY J. Quinoveva	CHECKED C. Weber	LOAD & RESISTANCE FACTOR DESIGN — LIVE LOADING: HL93 W/"LOW-BOY"; PERMIT DESIGN VEHICLE
	DETAILS	BY J. Quinoveva	CHECKED C. Weber	LAYOUT BY J. Quinoveva — CHECKED C. Weber
	QUANTITIES	BY J. Quinoveva	CHECKED D. Kim	SPECIFICATIONS BY M. Char — PLANS AND SPECS COMPARED M. Char

DESIGN GENERAL PLAN SHEET (ENGLISH) (REV.7/16/10)

ORIGINAL SCALE IN INCHES FOR REDUCED PLANS 0 1 2 3

PREPARED FOR THE STATE OF CALIFORNIA DEPARTMENT OF TRANSPORTATION

Mohan S. Char
PROJECT ENGINEER

BRIDGE NO. 55E0154
POST MILES 6.05

RETAINING WALL NO. 330R
GENERAL PLAN NO. 2

UNIT:
PROJECT NUMBER & PHASE: 1200020278
CONTRACT NO.: 12-0F96C1

DISREGARD PRINTS BEARING EARLIER REVISION DATES

REVISION DATES: 04-27-12 09-24-12 01-14-13 04-22-13

SHEET 2 OF 11

FILE => RW330R-a-gp02.dgn

USERNAME => s124496 DATE PLOTTED => 29-AUG-2013 TIME PLOTTED => 09:46

DIST	COUNTY	ROUTE	POST MILES TOTAL PROJECT	SHEET No	TOTAL SHEETS
12	Ora	5	3.7/6.2	744	780

REGISTERED CIVIL ENGINEER — DATE 4/22/13

8-26-13
PLANS APPROVAL DATE

REGISTERED PROFESSIONAL ENGINEER — MOHAN S. CHAR — No. 57894 — Exp. 6/30/14 — CIVIL — STATE OF CALIFORNIA

The State of California or its officers or agents shall not be responsible for the accuracy or completeness of electronic copies of this plan sheet.

ORANGE COUNTY TRANSPORTATION AUTHORITY
550 SOUTH MAIN STREET
ORANGE, CA 92863-1584

AECOM TECHNICAL SERVICES INC.
999 W. TOWN & COUNTRY ROAD
ORANGE, CALIFORNIA 92868

INDEX TO PLANS

No.	Title
1	GENERAL PLAN NO. 1
2	GENERAL PLAN NO. 2
3	INDEX TO PLANS
4	RETAINING WALL TYPE 7SW-DETAILS NO. 1
5	RETAINING WALL TYPE 7SW-DETAILS NO. 2
6	VERTICAL GROUND ANCHOR DETAILS NO. 1
7	VERTICAL GROUND ANCHOR DETAILS NO. 2
8	MASONRY BLOCK SOUND WALL ON RETAINING WALL-DETAILS NO. 1
9	MASONRY BLOCK SOUND WALL ON RETAINING WALL-DETAILS NO. 2
10	SOUND WALL DETAILS
11	LOG OF TEST BORINGS

STANDARD PLANS 2010 EDITION

	A10A	ABBREVIATIONS (SHEET 1 OF 2)
	A10B	ABBREVIATIONS (SHEET 2 OF 2)
	A10C	LINES AND SYMBOLS (SHEET 1 OF 3)
	A10D	LINES AND SYMBOLS (SHEET 2 OF 3)
	A10E	LINES AND SYMBOLS (SHEET 3 OF 3)
	A10F	LEGEND - SOIL (SHEET 1 OF 2)
	A10G	LEGEND - SOIL (SHEET 2 OF 2)
	A10H	LEGEND - ROCK
	A62B	LIMITS OF PAYMENT FOR EXCAVATION AND BACKFILL - BRIDGE SURCHARGE AND WALL
	A76A	CONCRETE BARRIER TYPE 60
	B0-3	BRIDGE DETAILS
RSP	B3-5	RETAINING WALL DETAILS NO. 1
	B15-9	SOUND WALL MASONRY BLOCK MISCELLANEOUS DETAILS

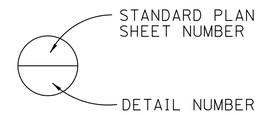

LEGEND

Denotes top of wall elevation (feet)

Denotes bottom of footing elevation (feet)

Denotes bottom of overexcavation (feet)

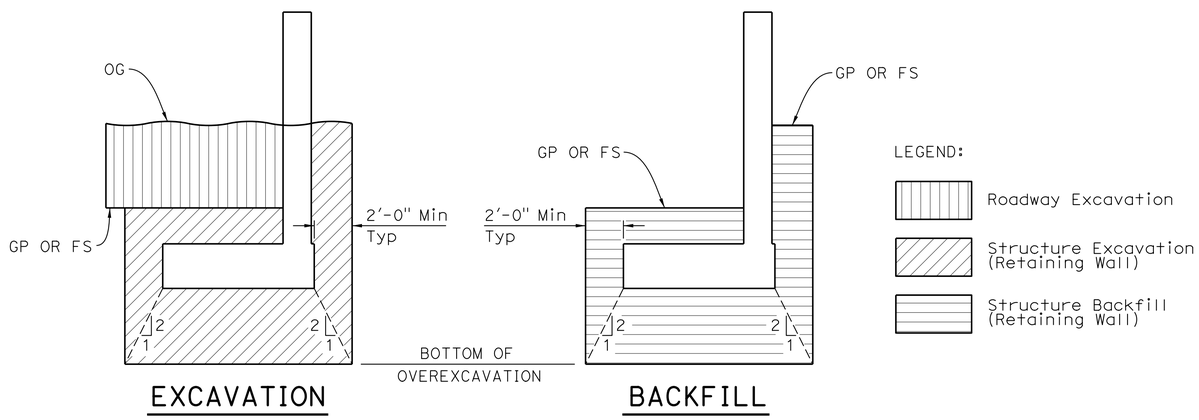

LIMITS OF PAYMENT FOR EXCAVATION AND BACKFILL

NO SCALE

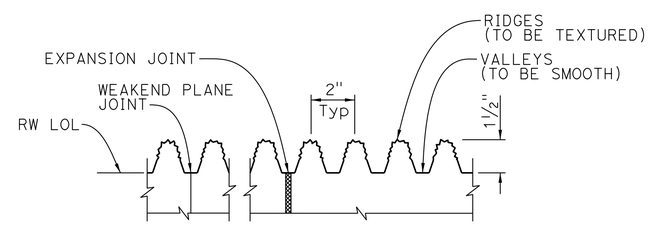

FRACTURED RIB TEXTURE

NO SCALE

NOTE:
Weakened Plane and Expansion Joints to be centered in valleys.

NOTE:
THE CONTRACTOR SHALL VERIFY ALL CONTROLLING FIELD DIMENSIONS BEFORE ORDERING OR FABRICATING ANY MATERIAL.

Luqi Yang
DESIGN OVERSIGHT Luqi Yang
5-15-13
SIGN OFF DATE

	BY	CHECKED
DESIGN	J. Quinoveva	C. Weber
DETAILS	H. Withers	C. Weber
QUANTITIES	J. Quinoveva	D. Kim

LOAD & RESISTANCE FACTOR DESIGN — LIVE LOADING: HL93 W/"LOW-BOY"; PERMIT DESIGN VEHICLE

	BY	CHECKED
LAYOUT	J. Quinoveva	C. Weber
SPECIFICATIONS	M. Char	PLANS AND SPECS COMPARED M. Char

PREPARED FOR THE STATE OF CALIFORNIA DEPARTMENT OF TRANSPORTATION

Mohan S. Char
PROJECT ENGINEER

BRIDGE NO. 55E0154
POST MILES 6.05

RETAINING WALL NO. 330R
INDEX TO PLANS

DESIGN GENERAL PLAN SHEET (ENGLISH) (REV.7/16/10)

ORIGINAL SCALE IN INCHES FOR REDUCED PLANS 0 1 2 3

UNIT:
PROJECT NUMBER & PHASE: 1200020278 CONTRACT NO.: 12-0F96C1

DISREGARD PRINTS BEARING EARLIER REVISION DATES

REVISION DATES: 04-27-12 09-24-12 01-14-13 04-22-13

SHEET 3 OF 11

FILE => RW330R-a-itp01.dgn

USERNAME => s124496 DATE PLOTTED => 29-AUG-2013 TIME PLOTTED => 09:47

DIST	COUNTY	ROUTE	POST MILES TOTAL PROJECT	SHEET No.	TOTAL SHEETS
12	Ora	5	3.7/6.2	745	780

REGISTERED CIVIL ENGINEER — DATE 4/22/13

8-26-13
PLANS APPROVAL DATE

REGISTERED PROFESSIONAL ENGINEER — Mohan S. Char — No. 57894 — Exp. 6/30/14 — CIVIL — STATE OF CALIFORNIA

The State of California or its officers or agents shall not be responsible for the accuracy or completeness of electronic copies of this plan sheet.

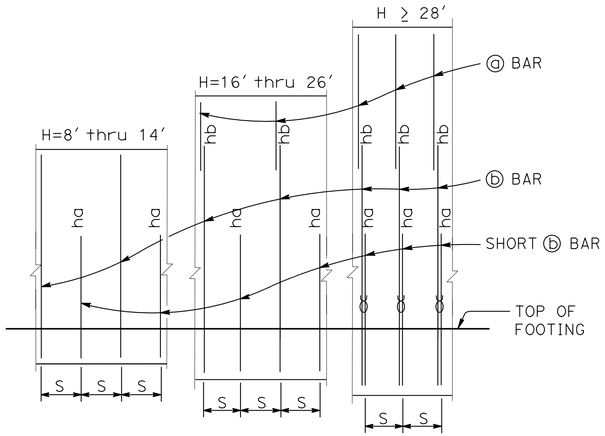

ELEVATION
No Scale

NOTES:
"ha", "hb" above ⓑ bars indicate distance from top of footing to upper end of ⓑ bars, see table.
"S" is ⓑ bar spacing, see table.

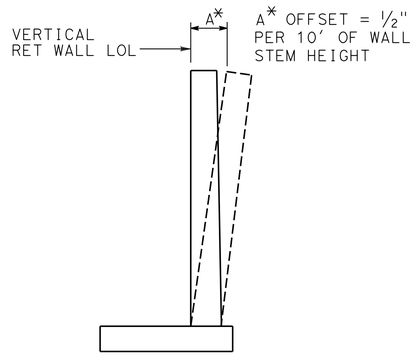

WALL OFFSET
No Scale

Values for offsetting forms to be determined by the Engineer

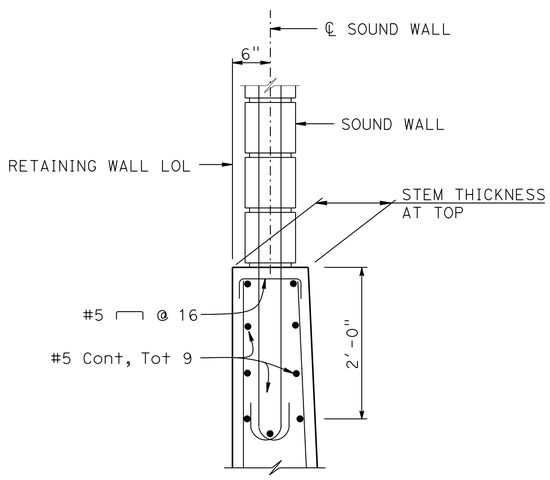

DETAIL A
1" = 1′-0"

DESIGN DATA

Design: AASHTO LRFD Bridge Design Specifications, 4th edition with California Amendments

WS: 33 psf on Sound wall

LS: Varied surcharge on level ground surface

EQE: Mononabe-Okabe Method
K_h = 0.3
K_v = 0.0

Soil: ϕ = 34°
γ = 120 pcf

Reinforced Concrete: f′c = 3600 psi
fy = 60,000 psi

Load Combinations and Limit States

Service I	Q=1.00DC+1.00EV+1.00EH+1.00LS+0.30WS+Td
Service II	Q=1.00DC+1.00EV+1.00EH+1.00WS+Td
Strength I	Q=aDC+βEV+1.50EH+1.75LS+Td
Strength III	Q=aDC+βEV+1.50EH+1.40WS+Td
Strength V	Q=aDC+βEV+1.50EH+1.35LS+0.40WS+Td
Extreme I	Q=1.00DC+1.00EV+1.00EH+1.00EQD+1.00EQE+Td

Where:
- Q: Force Effects
- a: 1.25 or 0.90, Which ever Controls Design
- β: 1.35 or 1.00, which ever Controls Design
- DC: Dead Load of Structure Components
- EV: Vertical Earth Fill Pressure
- LS: Live Load Surcharge
- EQE: Seismic Earth Pressure
- EQD: Soil and Structure Components Inertia
  Soil inertia ignored for stem design
- WS: Wind Load on Sound wall
- Td: Anchor Design Load

NOTES:

1. For retaining wall fractured rib texture, see "INDEX TO PLANS" sheet and for sound wall aesthetics, see "SOUND WALL DETAILS" sheet.
2. For Details not shown and drainage notes see RSP B3-5
3. Footing cover, 2′-0" minimum.
4. For sound wall reinforcement details, see "MASONRY BLOCK SOUND WALL ON RETAINING WALL-DETAILS NO. 1" sheet.
5. Shift ⓑ bars and ⓓ bars as required to clear formed hole for ground anchor.
6. Footing is designed to resist 1.33 Td assuming the maximum anchor spacing shown in the table.
7. For ground anchor details, see "VERTICAL GROUND ANCHOR DETAILS NO. 1" and "VERTICAL GROUND ANCHOR DETAILS NO. 2" sheets.

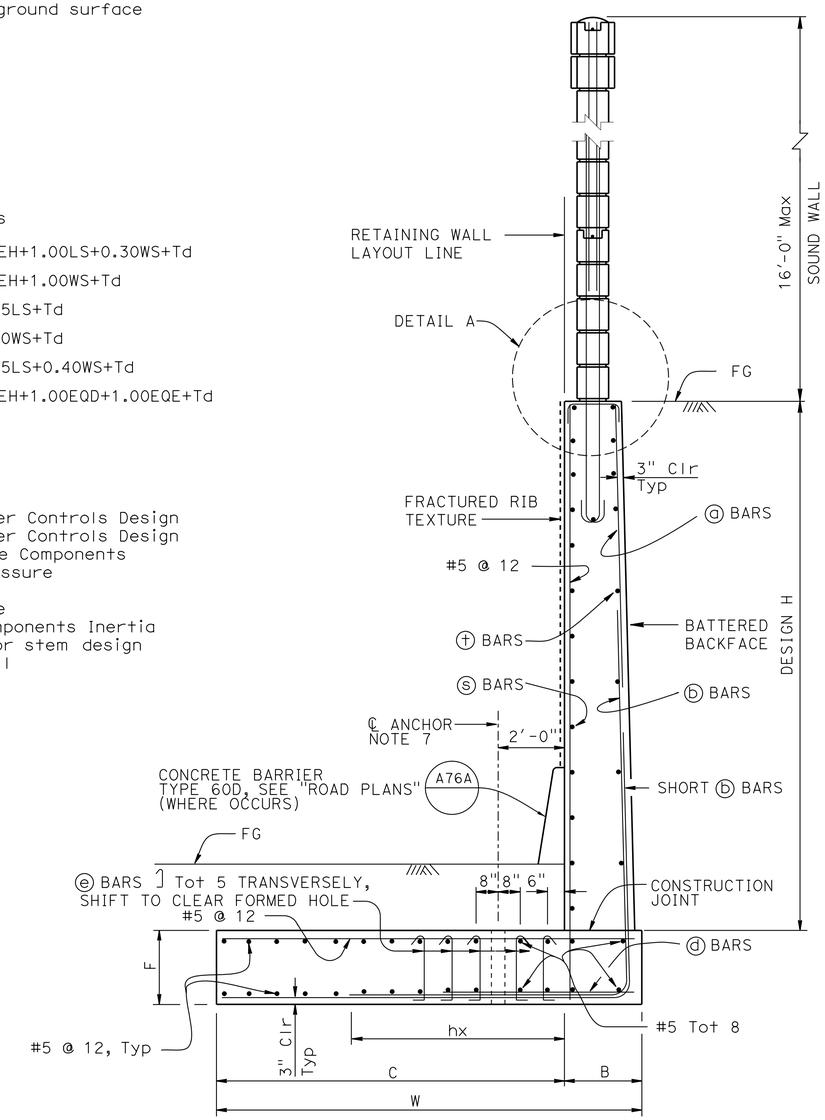

③ SPREAD FOOTING SECTION
No Scale

SPECIAL DETAILS

REVISED STANDARD DRAWING

FILE NO. xs14-380-1

APPROVAL DATE July 2011

① REVISED NOTE
② ADDED NOTE
③ MODIFIED DETAIL

STATE OF CALIFORNIA
DEPARTMENT OF TRANSPORTATION

DIVISION OF ENGINEERING SERVICES

BRIDGE NO. 55E0154
POST MILE 6.05

RETAINING WALL NO. 330R
RETAINING WALL TYPE 7SW-DETAILS NO. 1

DS OSD 2147A (ENGLISH STANDARD DRAWING "XS" BORDER REV. (02-02-11)

ORIGINAL SCALE IN INCHES FOR REDUCED PLANS 0 1 2 3

UNIT:
PROJECT NUMBER & PHASE: 1200020278
CONTRACT NO.: 12-0F96C1

DISREGARD PRINTS BEARING EARLIER REVISION DATES

REVISION DATES: 04-21-12 09-24-12 01-14-13 04-22-13

SHEET 4 OF 11

FILE => RW330R-g-rwdt01.dgn

USERNAME => s124936 DATE PLOTTED => 29-AUG-2013 TIME PLOTTED => 03:47

DIST	COUNTY	ROUTE	POST MILES TOTAL PROJECT	SHEET No.	TOTAL SHEETS
12	Ora	5	3.7/6.2	746	780

REGISTERED CIVIL ENGINEER 4/22/13 DATE

8-26-13
PLANS APPROVAL DATE

REGISTERED PROFESSIONAL ENGINEER Mohan S. Char No. 57894 Exp. 6/30/14 CIVIL STATE OF CALIFORNIA

The State of California or its officers or agents shall not be responsible for the accuracy or completeness of electronic copies of this plan sheet.

TABLE OF WALL DIMENSIONS, REINFORCING STEEL, AND BEARING STRESS

DESIGN H	8′	10′	12′	14′	16′	18′	20′	22′	24′	26′	28′	30′	32′
W	6′-9"	7′-6"	7′-0"	7′-6"	8′-6"	9′-3"	10′-3"	11′-3"	12′-3"	13′-0"	14′-3"	15′-3"	16′-3"
C	5′-6"	6′-3"	5′-6"	6′-0"	6′-9"	7′-3"	8′-0"	8′-6"	9′-6"	10′-0"	10′-10"	11′-6"	12′-5"
B	1′-3"	1′-3"	1′-6"	1′-6"	1′-9"	2′-0"	2′-3"	2′-9"	2′-9"	3′-0"	3′-5"	3′-9"	3′-10"
F	1′-6"	2′-0"	2′-4"	2′-4"	2′-6"	2′-6"	2′-9"	2′-9"	3′-0"	3′-3"	3′-6"	3′-9"	4′-0"
1 STEM THICKNESS AT TOP	1′-1"	1′-1"	1′-4"	1′-4"	1′-7"	1′-9"	2′-0"	2′-0"	2′-0"	2′-0"	2′-0"	2′-3"	2′-3"
BATTER	0	0	0	0	0	0	0	1/4:12	1/4:12	1/4:12	1/2:12	1/2:12	1/2:12
ⓐ BARS					#5 @ 14	#6 @ 13	#6 @ 13	#6 @ 13	#6 @ 11	#7 @ 12	#7 @ 11	#7 @ 10	#8 @ 11
ⓑ BARS	#5 @ 6	#5 @ 5.5	#6 @ 5	#6 @ 5	#8 @ 7	#8 @ 6.5	#9 @ 6.5	#9 @ 6.5	#9 @ 5.5	#10 @ 6	#10 @ 11ϋ	#10 @ 10ϋ	#11 @ 11ϋ
ha	7′-10"	9′-10"	5′-3"	6′-0"	6′-9"	7′-6"	7′-3"	9′-0"	9′-9"	9′-3"	11′-3"	13′-0"	13′-0"
hb					13′-0"	13′-0"	13′-0"	14′-6"	15′-6"	18′-6"	20′-6"	21′-6"	23′-0"
hx	5′-3"	6′-0"	5′-3"	5′-9"	6′-6"	7′-0"	7′-9"	7′-6"	8′-3"	9′-9"	10′-0"	11′-0"	12′-2"
ⓓ BARS	#5 @ 12	#5 @ 11	#5 @ 10	#5 @ 10	#5 @ 14	#5 @ 13	#5 @ 13	#5 @ 13	#5 @ 11	#5 @ 12	#5 @ 11	#5 @ 10	#5 @ 11
ⓓ BAR LENGTH	3′-6"	3′-6"	3′-6"	3′-6"	4′-6"	7′-0"	7′-6"	10′-9"	11′-9"	12′-6"	13′-9"	14′-9"	15′-9"
ⓔ BARS								#4 @ 13	#4 @ 11	#4 @ 12	#4 @ 11	#4 @ 10	#4 @ 11
ⓢ Bars	#4 @ 12	#4 @ 12	#5 @ 15	#5 @ 15	#5 @ 12	#5 @ 12	#6 @ 12	#6 @ 12	#6 @ 12	#6 @ 12	#6 @ 12	#7 @ 12	#7 @ 12
ⓣ Bars	#4 @ 18	#4 @ 18	#4 @ 18	#4 @ 18	#4 @ 12	#4 @ 12	#4 @ 12	#4 @ 12	#4 @ 12	#5 @ 12	#5 @ 12	#5 @ 12	#5 @ 12
Td (KIPS/FT)	0	0	5.25	7.5	9.0	11.25	12.75	15.0	16.5	21.0	21.75	24.75	27.75
1 To (KIPS/FT)	0	0	5.25	7.5	N/A	N/A	N/A	N/A	N/A	N/A	N/A	N/A	N/A
Tp = Larger of 1.33 Td & 1.25 To (KIPS/FT)	0	0	7.0	10.0	N/A	N/A	N/A	N/A	N/A	N/A	N/A	N/A	N/A
Max ANCHOR SPACING			10′-6"	9′-6"	7′-9"	6′-3"	7′-9"	6′-6"	8′-0"	6′-3"	6′-0"	5′-3"	4′-9"
SER I: B′(ft), q'_0 (ksf)	6.3, 0.6	6.9, 0.7	5.7, 2.1	6.1, 2.4	7.4, 2.4	8.1, 2.7	9.1, 2.8	9.8, 3.0	10.9, 3.0	11.4, 3.5	12.6, 3.5	13.6, 3.7	14.7, 3.8
STR Ia: B′(ft), q_0(ksf)	6.5, 1.3	6.7, 1.6	5.4, 3.3	5.7, 3.7	6.7, 3.8	7.4, 4.2	8.2, 4.3	8.9, 4.8	9.8, 4.9	10.1, 5.5	11.2, 5.6	12.1, 5.9	12.8, 6.2
STR, Ib: B′(ft), q_0(ksf)	5.7, 1.2	5.7, 1.5	4.6, 3.3	5.0, 3.7	5.9, 3.8	6.6, 4.0	7.3, 4.2	7.9, 4.6	8.7, 4.7	9.1, 5.3	10.0, 5.4	10.8, 5.7	11.5, 6.0
STR, IIIa: B′(ft), q_0(ksf)	5.0, 1.9	5.7, 2.6	4.9, 4.0	5.4, 4.4	6.4, 4.0	7.2, 4.5	8.2, 4.6	9.0, 4.9	10.0, 4.9	10.4, 5.4	11.6, 5.4	12.6, 5.7	13.4, 5.8
STR, IIIb: B′(ft), q_0(ksf)	3.7, 2.3	4.2, 2.8	4.0, 4.2	4.5, 4.5	5.6, 4.2	6.3, 4.5	7.2, 4.5	8.0, 4.8	8.9, 4.7	9.4, 5.3	10.4, 5.3	11.3, 5.3	12.1, 5.6
STR, Va: B′(ft), q_0(ksf)	6.0, 1.4	6.4, 1.7	5.2, 3.4	5.5, 3.8	6.6, 3.9	7.3, 4.3	8.2, 4.5	8.8, 4.8	9.8, 4.9	10.2, 5.6	11.2, 5.5	12.2, 5.9	12.9, 6.1
STR, Vb: B′(ft), q_0(ksf)	5.0, 1.3	5.2, 1.6	4.4, 3.4	4.8, 3.8	5.7, 3.8	6.4, 4.2	7.2, 4.4	7.8, 4.7	8.7, 4.8	9.1, 5.5	10.0, 5.4	10.9, 5.8	11.6, 6.0
Ext I: B′(ft), q_0(ksf)	3.4, 2.0	3.1, 3.6	2.4, 6.5	2.6, 8.1	3.0, 7.7	3.3, 9.0	3.5, 9.4	3.9, 10.1	4.3, 10.4	4.4, 11.9	4.9, 11.9	5.3, 12.7	5.5, 13.4

NOTE:

ⓔ Bar spacing shown is along the length of the retaining wall.

SYMBOLS:

SER: service limit state
STR: strength limit state
EXT: extreme event limit state
B′: effective footing width (ft)
q'_0: net bearing stress (ksf)
q_0: gross uniform bearing stress (ksf)
ϋ: 2 bar bundle
To: Anchor Lockoff Load
Tp: Anchor Factored Test Load
2 N/A: Not Applicable (Design H not used)

SPECIAL DETAILS

REVISED STANDARD DRAWING

FILE NO. xs14-380-2

APPROVAL DATE July 2011

1 MODIFIED TABLE
2 ADDED SYMBOL

STATE OF CALIFORNIA
DEPARTMENT OF TRANSPORTATION

DIVISION OF ENGINEERING SERVICES

BRIDGE NO. 55E0154
POST MILE 6.05

RETAINING WALL NO. 330R
RETAINING WALL TYPE 7SW-DETAILS NO. 2

DS OSD 2147A (ENGLISH STANDARD DRAWING "XS" BORDER REV. (02-02-11)

ORIGINAL SCALE IN INCHES FOR REDUCED PLANS 0 1 2 3

UNIT:
PROJECT NUMBER & PHASE: 1200020278
CONTRACT NO.: 12-0F96C1

DISREGARD PRINTS BEARING EARLIER REVISION DATES

REVISION DATES 04-21-12 09-24-12 01-14-13 04-22-13

SHEET 5 OF 11

FILE => RW330R-g-rwdt02.dgn

USERNAME => s124436 DATE PLOTTED => 29-AUG-2013 TIME PLOTTED => 09:47

DIST	COUNTY	ROUTE	POST MILES TOTAL PROJECT	SHEET No.	TOTAL SHEETS
12	Ora	5	3.7/6.2	747	780

REGISTERED CIVIL ENGINEER 4/22/13 DATE

8-26-13
PLANS APPROVAL DATE

The State of California or its officers or agents shall not be responsible for the accuracy or completeness of electronic copies of this plan sheet.

REGISTERED PROFESSIONAL ENGINEER Mohan S. Char No. 57894 Exp. 6/30/14 CIVIL STATE OF CALIFORNIA

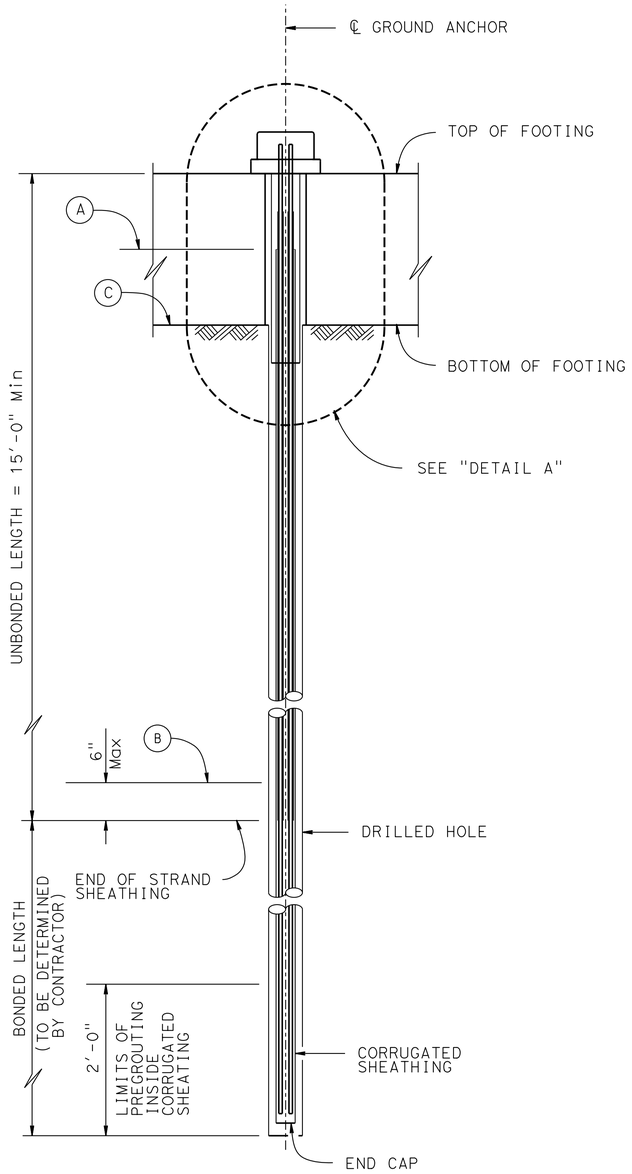

◇1 GROUND ANCHOR TENDON DETAILS (STRANDS)

1"= 1'-0"

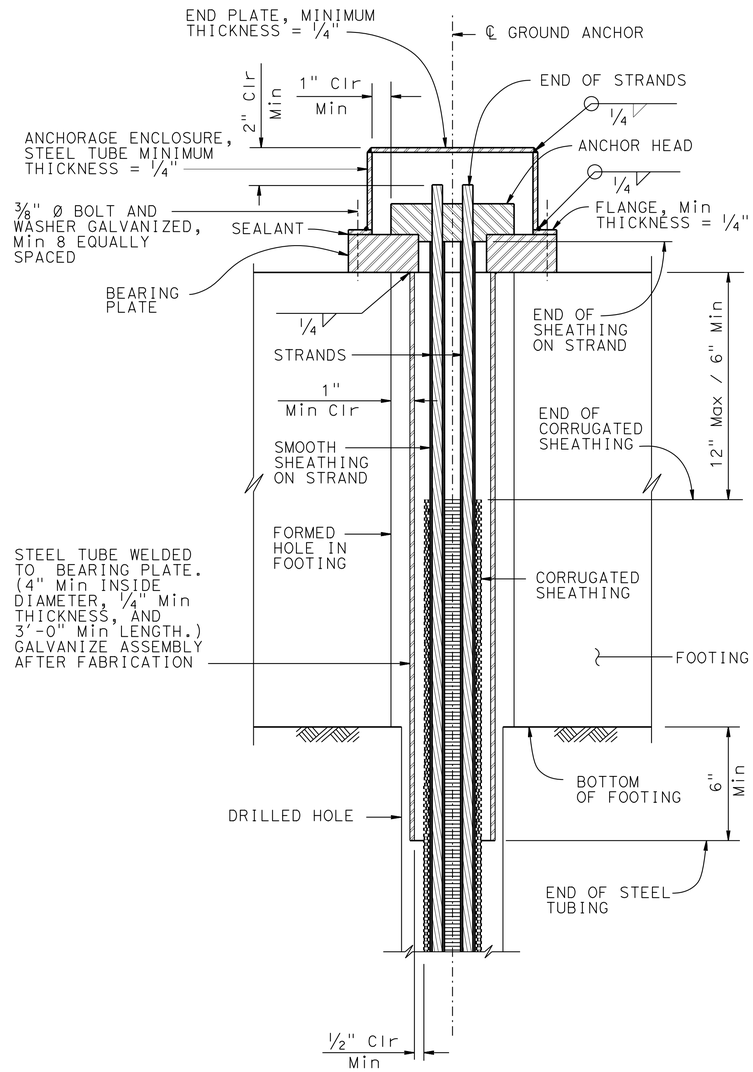

DETAIL A

3" = 1'-0"

GENERAL NOTES

DESIGN: AASHTO LRFD Bridge Design Specifications, 4th edition with California Amendments.

PRESTRESSING STEEL (GROUND ANCHORS):

STRANDS - ASTM Designation: A416
Tp = Factored test load per tendon (Kips)
fpu = Minimum tensile strength of prestressing steel (ksi)

As = Minimum cross sectional area of prestressing steel in tendon (square inches)

$$As\ (Min) = \frac{1.0\ Tp}{0.75\ fpu} \quad \text{(Strand)}$$

NOTES:

1. Anchorage enclosure shall have provisions to allow injecting grout at low end and venting at high end. Galvanize enclosure after fabrication.
2. Alternative anchor enclosure shown on sheet "VERTICAL GROUND ANCHOR DETAILS No. 2" sheet

(A) Level of initial grouting inside corrugated sheathing

(B) Level of initial grouting in drilled hole

(C) Level of secondary grouting in drilled hole

SPECIAL DETAILS

REVISED STANDARD DRAWING

FILE NO. xs12-030-1

APPROVAL DATE July 2011

◇1 REVISED DETAIL

STATE OF CALIFORNIA DEPARTMENT OF TRANSPORTATION

DIVISION OF ENGINEERING SERVICES

BRIDGE NO. 55E0154

POST MILE 6.05

RETAINING WALL NO. 330R

VERTICAL GROUND ANCHOR DETAILS NO. 1

DS OSD 2147A (ENGLISH STANDARD DRAWING "XS" BORDER REV. (02-02-11)

ORIGINAL SCALE IN INCHES FOR REDUCED PLANS 0 1 2 3

UNIT:
PROJECT NUMBER & PHASE: 1200020278

CONTRACT NO.: 12-0F96C1

DISREGARD PRINTS BEARING EARLIER REVISION DATES

REVISION DATES 04-27-12 09-24-12 01-14-13 04-22-13

SHEET 6 OF 11

FILE => RW330R-g-rwdt03.dgn

USERNAME => s124496 DATE PLOTTED => 29-AUG-2013 TIME PLOTTED => 09:47

DIST	COUNTY	ROUTE	POST MILES TOTAL PROJECT	SHEET No.	TOTAL SHEETS
12	Ora	5	3.7/6.2	748	780

REGISTERED CIVIL ENGINEER — DATE 4/22/13

8-26-13
PLANS APPROVAL DATE

REGISTERED PROFESSIONAL ENGINEER — Mohan S. Char — No. 57894 — Exp. 6/30/14 — CIVIL — STATE OF CALIFORNIA

The State of California or its officers or agents shall not be responsible for the accuracy or completeness of electronic copies of this plan sheet.

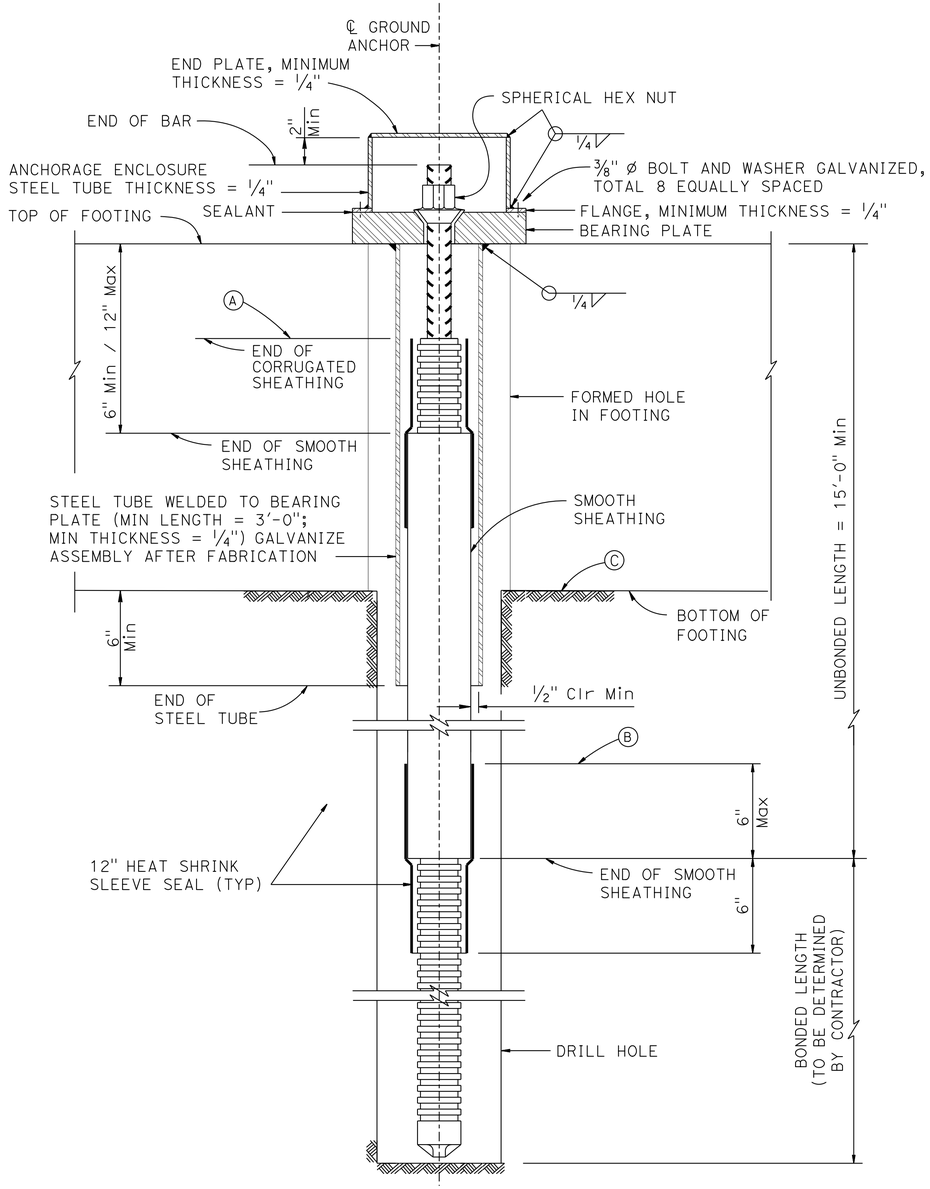

GROUND ANCHOR TENDON DETAILS (BAR)

1

3" = 1'-0"

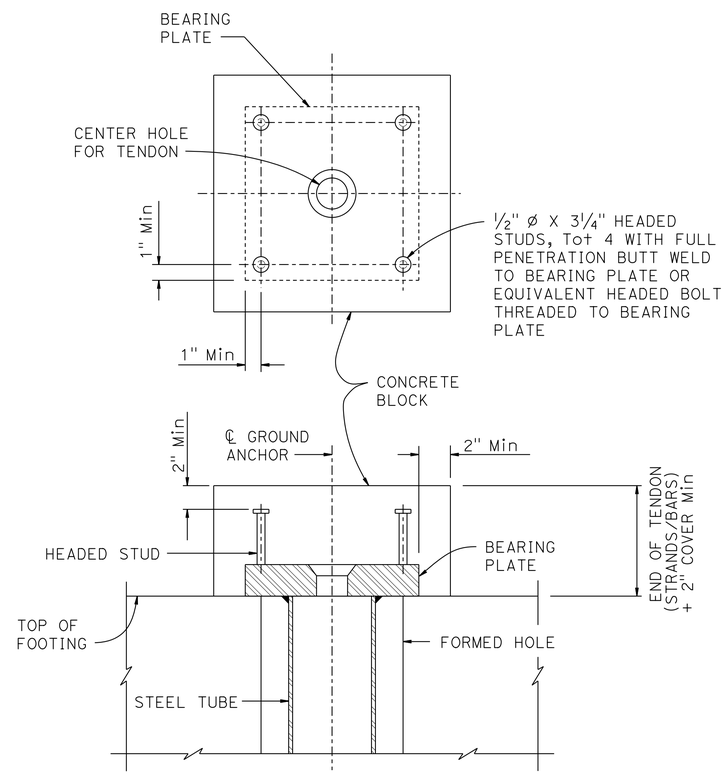

ANCHOR ENCLOSURE (ALTERNATIVE)

3" = 1'-0"

GENERAL NOTES

DESIGN: AASHTO LRFD Bridge Design Specifications, 4th edition with California Amendments.

PRESTRESSING STEEL (GROUND ANCHORS):

BARS - ASTM Designation: A722 Type II
Tp = Factored test load per tendon (Kips)
fpu = Minimum tensile strength of prestressing steel (ksi)

As = Minimum cross sectional area of prestressing steel in tendon (square inches)

$$As\ (Min) = \frac{1.0\ Tp}{0.75\ fpu} \quad (Bar)$$

NOTES:

Anchorage enclosure shall have provision to allow injecting grout at low end and venting at high end. Galvanize enclosure after fabrication.

(A) Level of initial grouting inside corrugated sheathing

(B) Level of initial grouting in drilled hole

(C) Level of secondary grouting in drilled hole

SPECIAL DETAILS

REVISED STANDARD DRAWING

FILE NO. xs12-030-2

APPROVAL DATE July 2011

1 REVISED DETAIL

STATE OF CALIFORNIA DEPARTMENT OF TRANSPORTATION

DIVISION OF ENGINEERING SERVICES

BRIDGE NO. 55E0154

POST MILE 6.05

RETAINING WALL NO. 330R

VERTICAL GROUND ANCHOR DETAILS NO. 2

DS OSD 2147A (ENGLISH STANDARD DRAWING "XS" BORDER REV. (02-02-11)

ORIGINAL SCALE IN INCHES FOR REDUCED PLANS 0 1 2 3

UNIT:
PROJECT NUMBER & PHASE: 1200020278

CONTRACT NO.: 12-0F96C1

DISREGARD PRINTS BEARING EARLIER REVISION DATES

REVISION DATES 04-27-12 09-24-12 01-14-13 04-22-13

SHEET 7 OF 11

FILE => RW330R-g-rwdt04.dgn

USERNAME => s124936 DATE PLOTTED => 29-AUG-2013 TIME PLOTTED => 09:47

DIST	COUNTY	ROUTE	POST MILES TOTAL PROJECT	SHEET No.	TOTAL SHEETS
12	Ora	5	3.7/6.2	749	780

REGISTERED CIVIL ENGINEER — DATE 4/22/13

8-26-13
PLANS APPROVAL DATE

The State of California or its officers or agents shall not be responsible for the accuracy or completeness of electronic copies of this plan sheet.

REGISTERED PROFESSIONAL ENGINEER — Mohan S. Char — No. 57894 — Exp. 6/30/14 — CIVIL — STATE OF CALIFORNIA

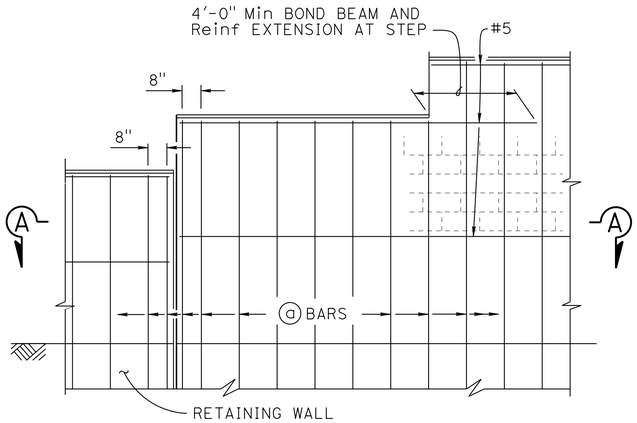

H=6'-0" THRU H=10'-0"

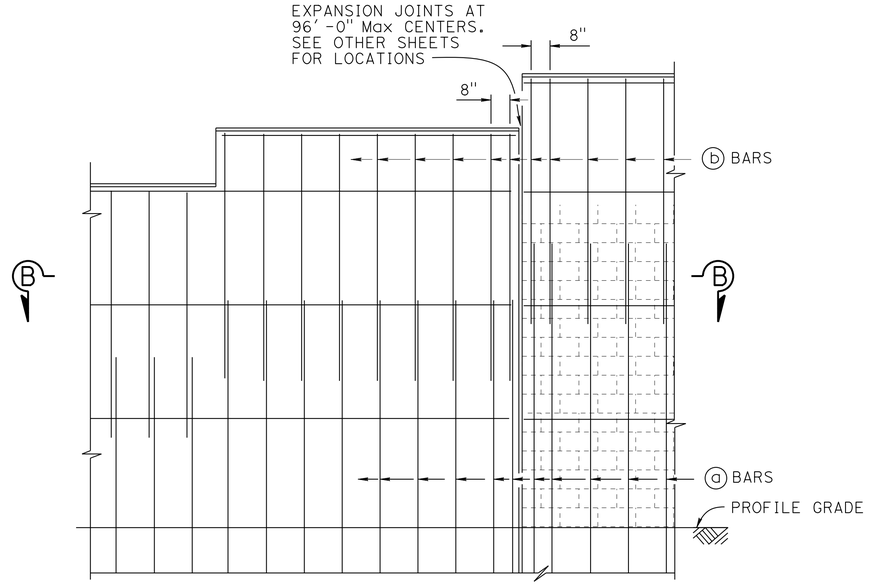

H=12'-0" THRU H=16'-0"

PART ELEVATION

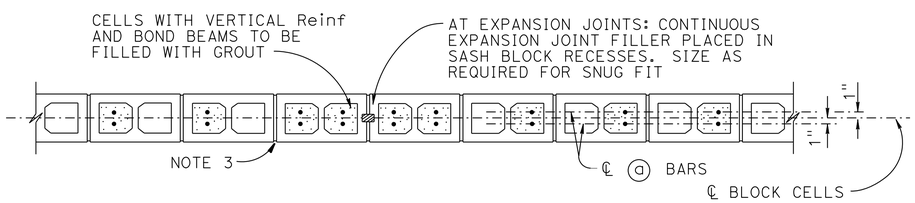

SECTION A-A

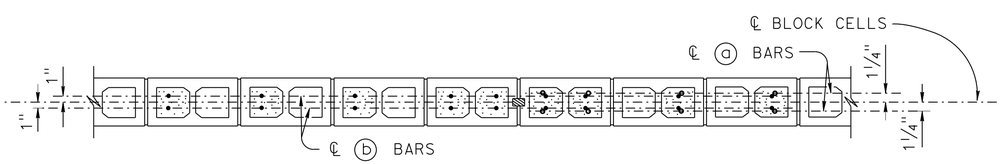

SECTION B-B

SOUND WALL REINFORCEMENT TABLE						
MAXIMUM "H"	ⓐ BARS @ 1'-4" Max	ⓑ BARS @ 1'-4" Max	"Y"	f'm (psi)	COMPRESSIVE STRENGTH OF CMU (psi)	MAXIMUM "H"
6'-0"	#4	——	——	1500	1900	6'-0"
8'-0"	#4	——	——	1500	1900	8'-0"
10'-0"	#4	——	——	1500	1900	10'-0"
12'-0"	#5	#4	6'-0"	2000	2800	12'-0"
14'-0"	#6	#4	8'-0"	2500	3750	14'-0"
16'-0"	#6	#4	10'-0"	2500	3750	16'-0"

DESIGN NOTES

DESIGN
Uniform Building Code, 1997 Edition and the Bridge Design Specifications

DESIGN WIND LOAD
33 psf

DESIGN SEISMIC LOAD
0.57 Dead load

REINFORCED CONCRETE
f'c = 3600 ksi
fy = 60 ksi

CONCRETE MASONRY

REGULAR STRENGTH	HIGH STRENGTH	
f'm = 1500 psi	f'm = 2000 psi	f'm = 2500 psi
fb = 495 psi	fb = 660 psi	fb = 830 psi
fs = 24,000 psi	fs = 24,000 psi	fs = 24,000 psi
n = 25.8	n = 19.3	n = 15.5

NOTES:

1. For type of block and joint finish, see other sheets.
2. When blocks are laid in stacked bond, ladder type, galvanized joint reinforcement shall be provided. A minimum of 2 - 9 gauge wires continuous at 4'-0" maximum to be used. Locate reinforcement in joints that are at the approximate midpoint between bond beams.
3. Horizontal joints shall be tooled concave or may be weathered.
   Vertical joints shall be tooled concave or may be raked.
4. For intermediate wall heights that are between the "H's" given, use the tabular information for the next higher "H".
5. See STANDARD PLANS B15-9 for other details.

NO SCALE

RETAINING WALL NO. 330R

MASONRY BLOCK SOUND WALL ON RETAINING WALL

DETAILS NO. 1

STANDARD DRAWING
FILE NO. xs15-120-1
APPROVAL DATE July 2011

STATE OF CALIFORNIA
DEPARTMENT OF TRANSPORTATION

DIVISION OF ENGINEERING SERVICES

BRIDGE NO. 55E0154
POST MILE 6.05

DS OSD 2147A (ENGLISH STANDARD DRAWING "XS" BORDER REV. (02-02-11)

ORIGINAL SCALE IN INCHES FOR REDUCED PLANS 0 1 2 3

UNIT:
PROJECT NUMBER & PHASE: 1200020278
CONTRACT NO.: 12-0F96C1

DISREGARD PRINTS BEARING EARLIER REVISION DATES
REVISION DATES 04-27-12 09-24-12 01-14-13 04-22-13
SHEET 8 OF 11

FILE => RW330R-g-rwdt05.dgn

USERNAME => s124496 DATE PLOTTED => 29-AUG-2013 TIME PLOTTED => 09:47

DIST	COUNTY	ROUTE	POST MILES TOTAL PROJECT	SHEET No.	TOTAL SHEETS
12	Ora	5	3.7/6.2	750	780

REGISTERED CIVIL ENGINEER 4/22/13 DATE

8-26-13
PLANS APPROVAL DATE

REGISTERED PROFESSIONAL ENGINEER Mohan S. Char No. 57894 Exp. 6/30/14 CIVIL STATE OF CALIFORNIA

The State of California or its officers or agents shall not be responsible for the accuracy or completeness of electronic copies of this plan sheet.

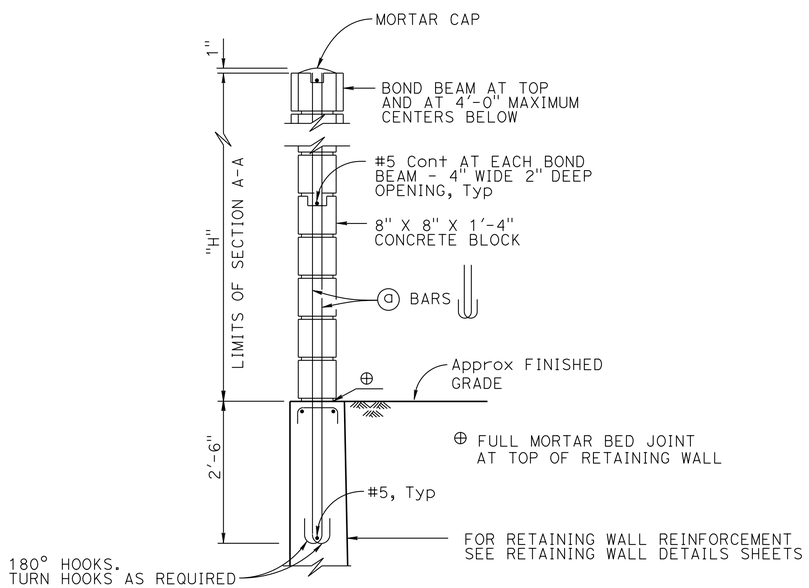

NOTE:
For details not shown, see H=12'-0" thru H=16'-0"

H=6'-0" THRU H=10'-0"

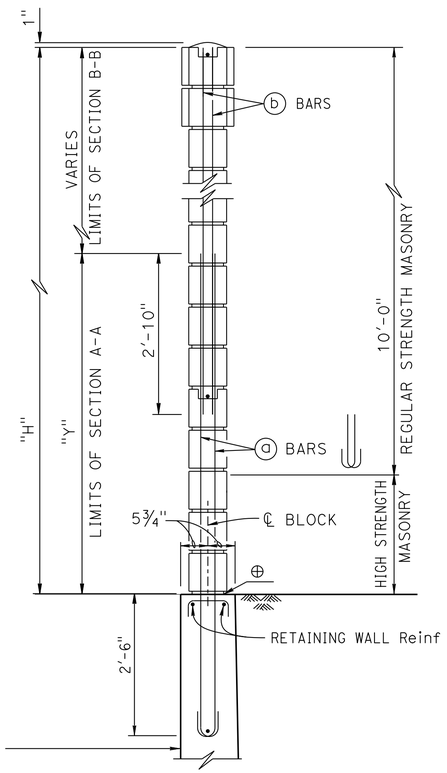

NOTE:
For details not shown, see H=6'-0" thru H=10'-0"

H=12'-0" THRU H=16'-0"

TYPICAL SECTION

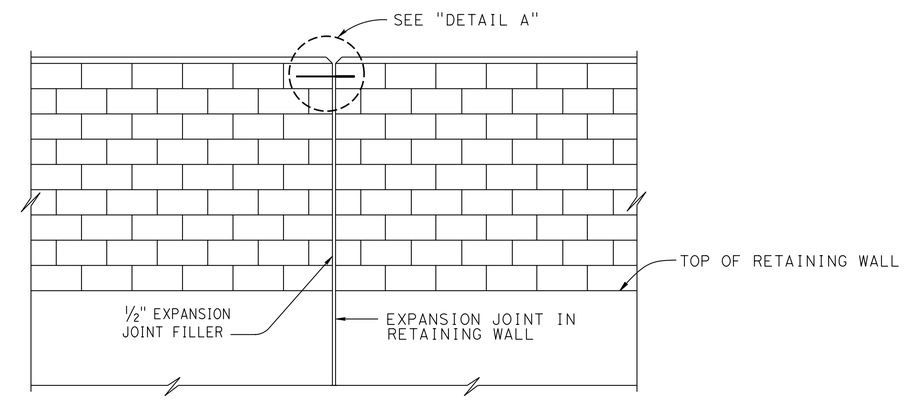

ALIGNMENT KEY DETAIL

1 For sound wall block type, see "SOUND WALL DETAILS" sheet.

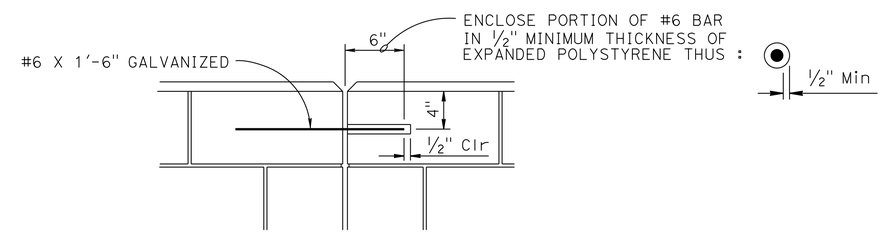

DETAIL A

NO SCALE

SPECIAL DETAILS

RETAINING WALL NO. 330R

MASONRY BLOCK SOUND WALL ON RETAINING WALL

DETAILS NO. 2

REVISED STANDARD DRAWING

FILE NO. xs15-120-2

APPROVAL DATE July 2012

1 ADDED NOTE

STATE OF CALIFORNIA DEPARTMENT OF TRANSPORTATION

DIVISION OF ENGINEERING SERVICES

BRIDGE NO. 55E0154

POST MILE 6.05

DS OSD 2147A (ENGLISH STANDARD DRAWING "XS" BORDER REV. (02-02-11)

ORIGINAL SCALE IN INCHES FOR REDUCED PLANS 0 1 2 3

UNIT:
PROJECT NUMBER & PHASE: 1200020278

CONTRACT NO.: 12-0F96C1

DISREGARD PRINTS BEARING EARLIER REVISION DATES

REVISION DATES 04-27-12 09-24-12 01-14-13 04-22-13

SHEET 9 OF 11

FILE => RW330R-g-rwdt06.dgn

USERNAME => s124436 DATE PLOTTED => 29-AUG-2013 TIME PLOTTED => 09:47

DIST	COUNTY	ROUTE	POST MILES TOTAL PROJECT	SHEET No	TOTAL SHEETS
12	Ora	5	3.7/6.2	751	780

REGISTERED CIVIL ENGINEER — DATE 4/22/13

8-26-13
PLANS APPROVAL DATE

REGISTERED PROFESSIONAL ENGINEER — MOHAN S. CHAR — No. 57894 — Exp. 6/30/14 — CIVIL — STATE OF CALIFORNIA

The State of California or its officers or agents shall not be responsible for the accuracy or completeness of electronic copies of this plan sheet.

ORANGE COUNTY TRANSPORTATION AUTHORITY
550 SOUTH MAIN STREET
ORANGE, CA 92863-1584

AECOM TECHNICAL SERVICES INC.
999 W. TOWN & COUNTRY ROAD
ORANGE, CALIFORNIA 92868

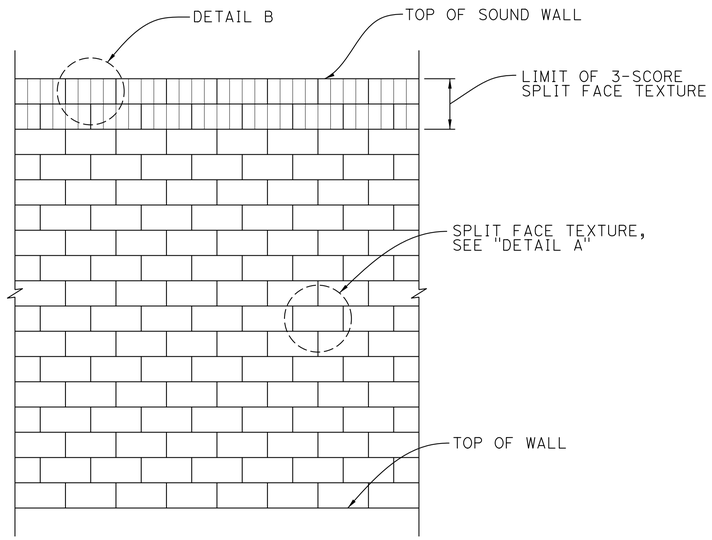

PART ELEVATION
NO SCALE

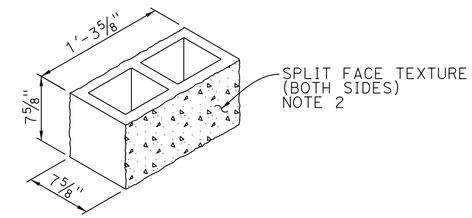

DETAIL A
NO SCALE

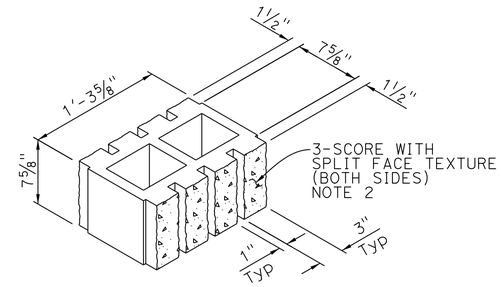

DETAIL B
NO SCALE

NOTE:

1. Block size shall be 8" x 8" x 1'-4".
2. Block color shall match existing sound walls nearby.

Luqi Yang
DESIGN OVERSIGHT Luqi Yang
5-15-13
SIGN OFF DATE

	BY	CHECKED
DESIGN	J. Quinoveva	C. Weber
DETAILS	H. Withers	C. Weber
QUANTITIES	J. Quinoveva	D. Kim

PREPARED FOR THE STATE OF CALIFORNIA DEPARTMENT OF TRANSPORTATION

Mohan S. Char
PROJECT ENGINEER

BRIDGE NO. 55E0154
POST MILES 6.05

RETAINING WALL NO. 330R
SOUND WALL DETAILS

DESIGN DETAIL SHEET (ENGLISH) (REV.7/16/10)

ORIGINAL SCALE IN INCHES FOR REDUCED PLANS 0 1 2 3

UNIT:
PROJECT NUMBER & PHASE: 1200020278 CONTRACT NO.: 12-0F96C1

DISREGARD PRINTS BEARING EARLIER REVISION DATES → REVISION DATES 09-24-12 01-14-13 04-22-13

SHEET 10 OF 11

FILE => RW330R-g-rwdt07.dgn

USERNAME => s124496 DATE PLOTTED => 29-AUG-2013 TIME PLOTTED => 09:47

DIST	COUNTY	ROUTE	POST MILES TOTAL PROJECT	SHEET No	TOTAL SHEETS
12	Ora	5	3.7/6.2	752	780

REGISTERED ENGINEER — 4/22/13 DATE

8-26-13
PLANS APPROVAL DATE

REGISTERED PROFESSIONAL ENGINEER — A. KORKOS NO. GE 2357 EXP. 3-31-14 GEOTECHNICAL — STATE OF CALIFORNIA

The State of California or its officers or agents shall not be responsible for the accuracy or completeness of electronic copies of this plan sheet.

ORANGE COUNTY TRANSPORTATION AUTHORITY
550 SOUTH MAIN STREET
ORANGE, CA 92863-1584

EARTH MECHANICS, INC.
17800 NEWHOPE STREET, SUITE B
FOUNTAIN VALLEY, CA 92708

BENCH MARK

DESIGNATION: 3SS-2-82 ELEV 95.558′

DESCRIBED BY OCS 2003 - FOUND 3¾" OCS ALUMINUM BENCH MARK DISK STAMPED "3SS-2-82", SET IN THE SOUTHEASTERLY CORNER OF A 4 FT. BY 4.5 FT. CONCRETE CATCH BASIN. MONUMENT IS LOCATED ALONG THE NORTHWESTERLY SIDE OF AVENIDA VAQUERO, 100 FT. NORTHERLY OF THE NORTHERLY EDGE OF THE SAN DIEGO FREEWAY OVERCROSSING OF AVENIDA VAQUERO, 23 FT. WESTERLY OF THE CENTERLINE OF VAQUERO AND 29.2 FT. SOUTHERLY OF A STREET STANDARD NO NUMBER. MONUMENT IS SET LEVEL WITH THE TOP OF THE CURB.

NOTES:

(1) This LOTB sheet was prepared in accordance with the Caltrans Soil and Rock Logging, Classification and Presentation Manual (June 2010).

(2) 2.4" samples were taken using a California Modified Sampler.

(3) An automatic trip hammer system consisting of a hammer weight of 140 lbs falling a distance of 30" was used to advance the drive sampler.

(4) Conversion factor from 2.4" Modified California Ring Sampler blowcounts to Standard Penetration Test (SPT) blowcounts is 0.5.

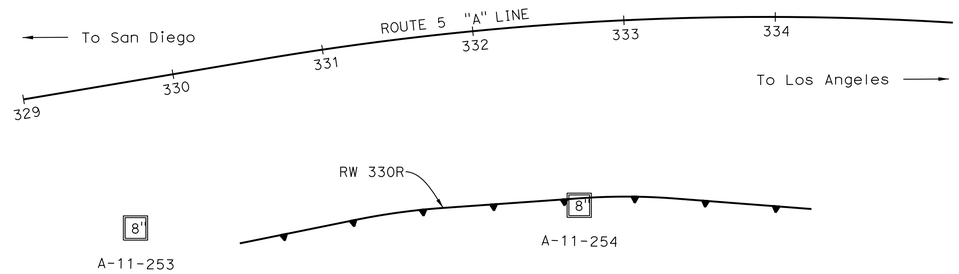

PLAN
1" = 50′

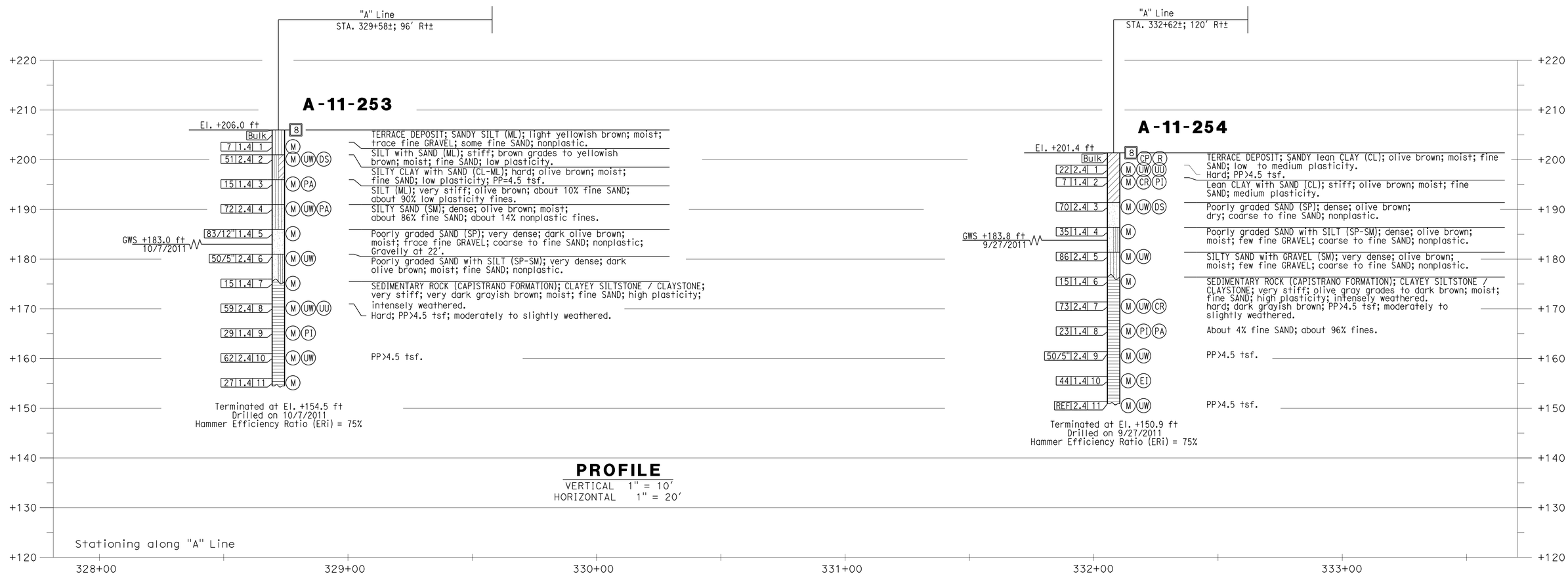

PROFILE
VERTICAL 1" = 10′
HORIZONTAL 1" = 20′

Luqi Yang — DESIGN OVERSIGHT Luqi Yang; 5-15-13 SIGN OFF DATE	DRAWN BY J. FANG	R. JIE — FIELD INVESTIGATION BY:	PREPARED FOR THE STATE OF CALIFORNIA DEPARTMENT OF TRANSPORTATION	A. KORKOS — PROJECT ENGINEER	BRIDGE NO. 55E0154	RETAINING WALL NO. 330R
	CHECKED BY G. J. GUNARANJAN	DATE: 9/2011, 10/2011			POST MILES 6.05	LOG OF TEST BORINGS

GS GEOTECHNICAL LOG OF TEST BORINGS SHEET (ENGLISH) (REV. 7/16/10)

ORIGINAL SCALE IN INCHES FOR REDUCED PLANS 0 1 2 3

UNIT:
PROJECT NUMBER & PHASE: 12000202781

DISREGARD PRINTS BEARING EARLIER REVISION DATES → 04-27-12 09-24-12 01-14-13 04-22-13

SHEET 11 OF 11

FILE => RW330R-z-lotb1.dgn

CONTRACT NO.: 12-0F96C1 PROJECT ID: 1200020278

USERNAME => s124496 DATE PLOTTED => 29-AUG-2013 TIME PLOTTED => 09:47

DIST	COUNTY	ROUTE	POST MILES TOTAL PROJECT	SHEET No	TOTAL SHEETS
12	Ora	5	3.7/6.2	753	780

REGISTERED CIVIL ENGINEER 4/22/13 DATE

8-26-13
PLANS APPROVAL DATE

REGISTERED PROFESSIONAL ENGINEER MOHAN S. CHAR No. 57894 Exp. 6/30/14 CIVIL STATE OF CALIFORNIA

The State of California or its officers or agents shall not be responsible for the accuracy or completeness of electronic copies of this plan sheet.

ORANGE COUNTY TRANSPORTATION AUTHORITY
550 SOUTH MAIN STREET
ORANGE, CA 92863-1584

AECOM TECHNICAL SERVICES INC.
999 W. TOWN & COUNTRY ROAD
ORANGE, CALIFORNIA 92868

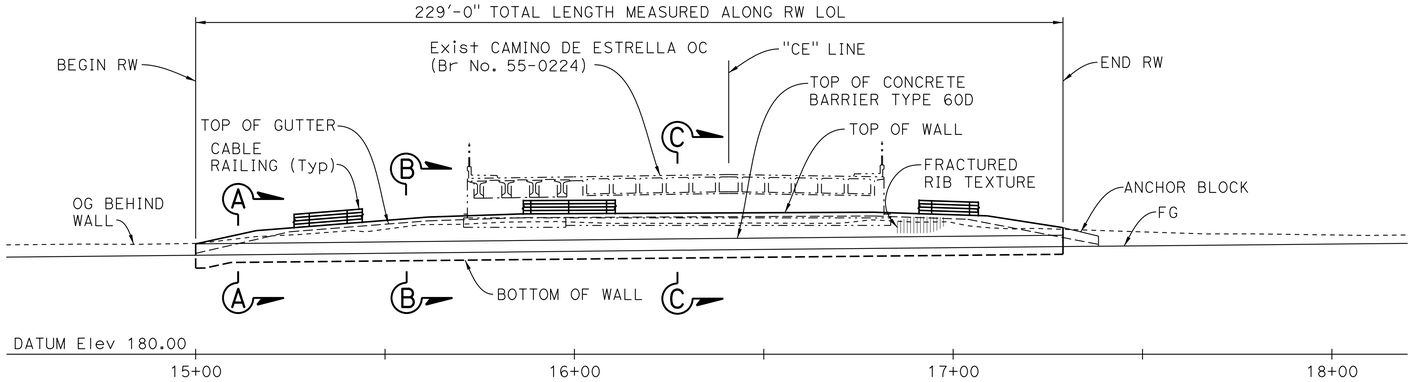

ELEVATION
1" = 20'

CURVE DATA				
No.	R	Δ	L	T
1	4000.00'	9°34'01"	667.89'	334.73'

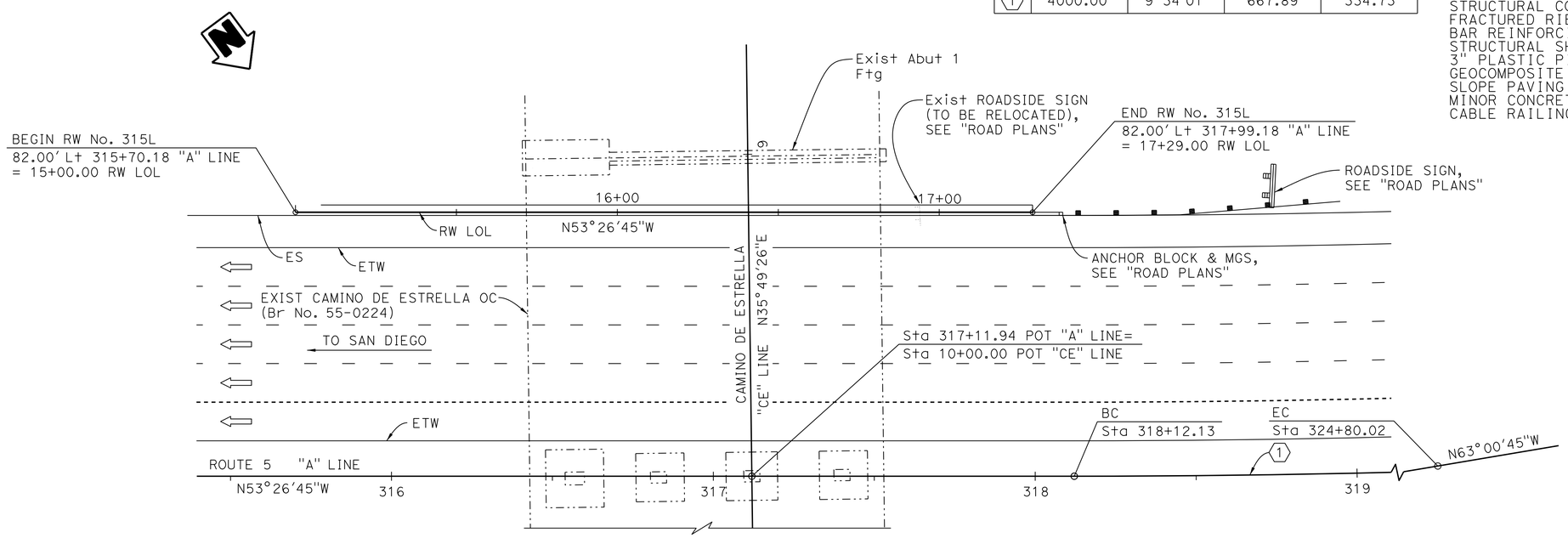

PLAN
1" = 20'

TIEBACK WALL NO 315L BRIDGE NO 55E0132

QUANTITIES

REMOVE SLOPE PAVING (SQFT)	719	SQFT
STRUCTURE EXCAVATION (GROUND ANCHOR WALL)	230	CY
STRUCTURE BACKFILL (GROUND ANCHOR WALL)	20	CY
GROUND ANCHOR (SUBHORIZONTAL)	64	EA
STRUCTURAL CONCRETE, RETAINING WALL	99	CY
FRACTURED RIB TEXTURE	1,295	SQFT
BAR REINFORCING STEEL (RETAINING WALL)	45,790	LB
STRUCTURAL SHOTCRETE	105	CY
3" PLASTIC PIPE UNDERDRAIN	165	LF
GEOCOMPOSITE DRAIN	315	SQFT
SLOPE PAVING (RANDOM SLATE PATTERN)	45	CY
MINOR CONCRETE (GUTTER) (LF)	258	LF
CABLE RAILING	230	LF

NOTES:

1. For "SECTION A-A", "SECTION B-B", and "SECTION C-C", see "GENERAL PLAN NO. 2" sheet.
2. For "GENERAL NOTES" and "INDEX TO PLANS", see "GENERAL NOTES & INDEX TO PLANS" sheet.

LEGEND:

——— Denotes new construction

·—·—· Denotes existing structure

NOTE:
THE CONTRACTOR SHALL VERIFY ALL CONTROLLING FIELD DIMENSIONS BEFORE ORDERING OR FABRICATING ANY MATERIAL.

Luqi Yang DESIGN OVERSIGHT Luqi Yang 5-15-13 SIGN OFF DATE	DESIGN	BY M. Wise	CHECKED D. Kim	LOAD & RESISTANCE FACTOR DESIGN	LIVE LOADING: HL93 W/"LOW-BOY"; PERMIT DESIGN VEHICLE
	DETAILS	BY J. Quinoveva	CHECKED D. Kim	LAYOUT BY J. Quinoveva	CHECKED C. Weber
	QUANTITIES	BY M. Wise	CHECKED D. Kim	SPECIFICATIONS BY M. Char	PLANS AND SPECS COMPARED M. Char

PREPARED FOR THE STATE OF CALIFORNIA DEPARTMENT OF TRANSPORTATION

Mohan S. Char
PROJECT ENGINEER

BRIDGE NO. 55E0132
POST MILES 5.80

RETAINING WALL NO. 315L
GENERAL PLAN NO. 1

DESIGN GENERAL PLAN SHEET (ENGLISH) (REV.7/16/10)

ORIGINAL SCALE IN INCHES FOR REDUCED PLANS 0 1 2 3

UNIT:
PROJECT NUMBER & PHASE: 1200020278 CONTRACT NO.: 12-0F96C1

DISREGARD PRINTS BEARING EARLIER REVISION DATES → REVISION DATES 04-27-12 09-24-12 01-14-13 04-22-13 SHEET 1 OF 14

FILE => 55E0132-a-gp01.dgn

USERNAME => s124496 DATE PLOTTED => 29-AUG-2013 TIME PLOTTED => 09:47

DIST	COUNTY	ROUTE	POST MILES TOTAL PROJECT	SHEET No	TOTAL SHEETS
12	Ora	5	3.7/6.2	754	780

REGISTERED CIVIL ENGINEER — DATE 4/22/13

8-26-13
PLANS APPROVAL DATE

REGISTERED PROFESSIONAL ENGINEER — MOHAN S. CHAR — No. 57894 — Exp. 6/30/14 — CIVIL — STATE OF CALIFORNIA

The State of California or its officers or agents shall not be responsible for the accuracy or completeness of electronic copies of this plan sheet.

ORANGE COUNTY TRANSPORTATION AUTHORITY
550 SOUTH MAIN STREET
ORANGE, CA 92863-1584

AECOM TECHNICAL SERVICES INC.
999 W. TOWN & COUNTRY ROAD
ORANGE, CALIFORNIA 92868

NOTES:

1. For limits of Slope Paving, see "SLOPE PAVING DETAILS" sheet.
2. For "FRACTURED RIB TEXTURE", see "GENERAL NOTES & INDEX TO PLANS" sheet.

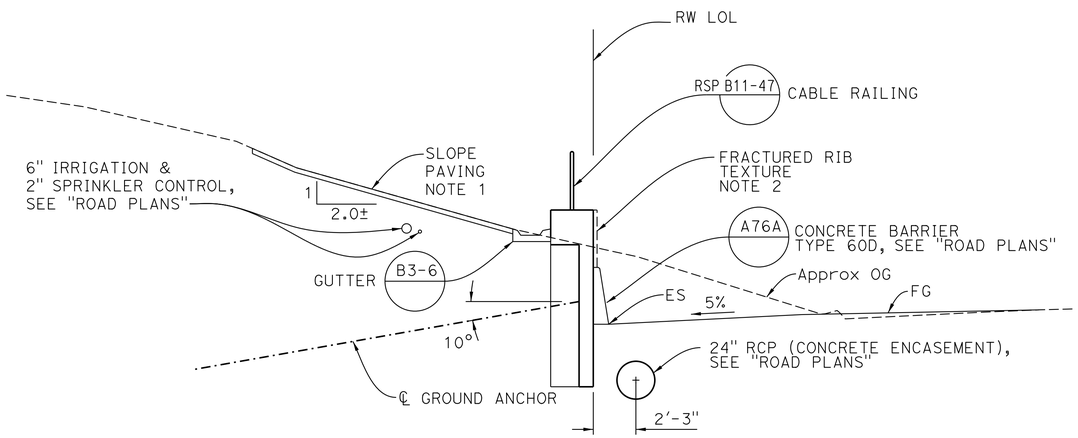

SECTION A-A
1/4" = 1'-0"

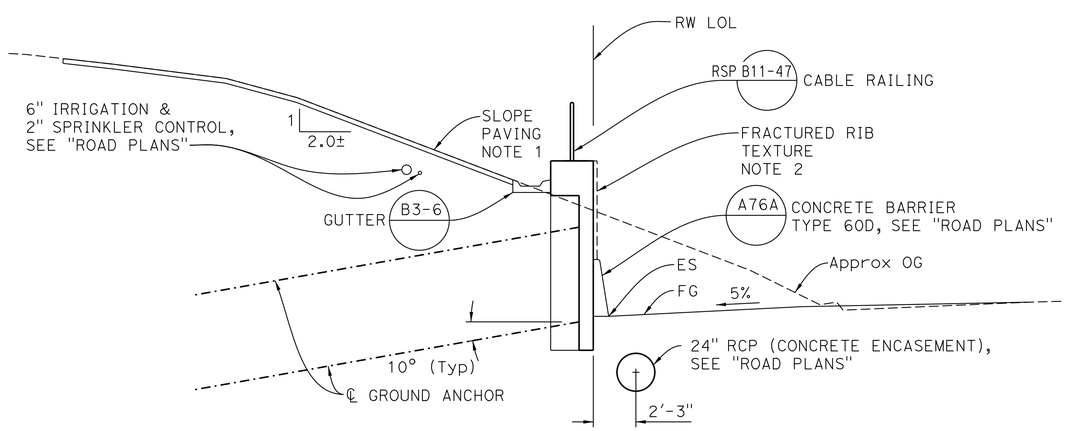

SECTION B-B
1/4" = 1'-0"

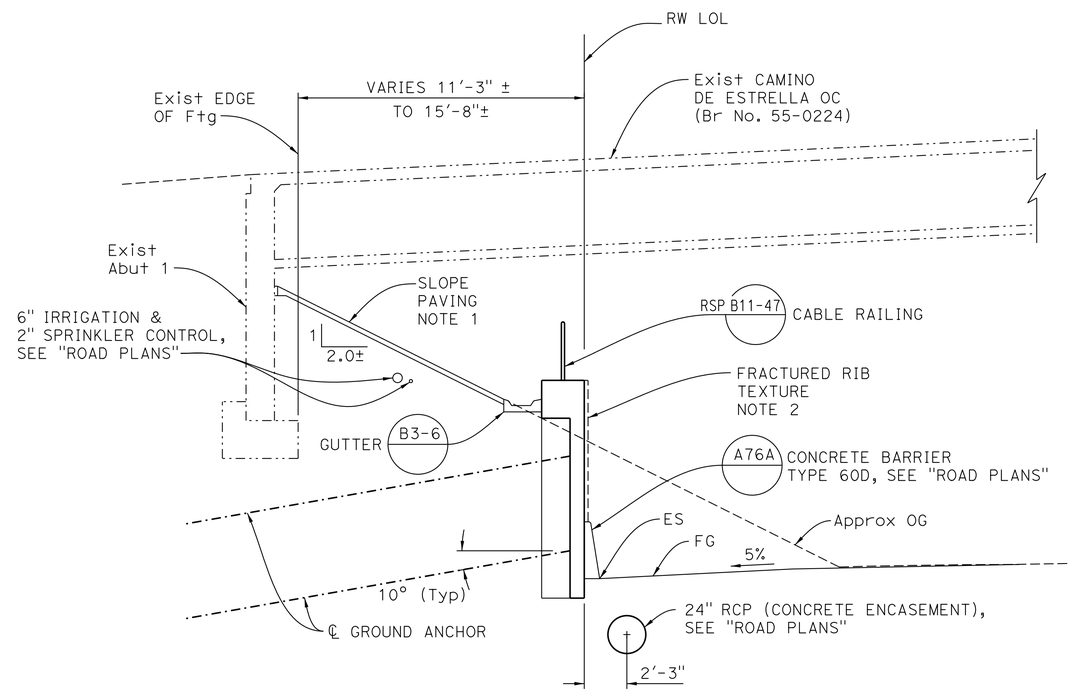

SECTION C-C
1/4" = 1'-0"

NOTE:
THE CONTRACTOR SHALL VERIFY ALL CONTROLLING FIELD DIMENSIONS BEFORE ORDERING OR FABRICATING ANY MATERIAL.

Luqi Yang — DESIGN OVERSIGHT Luqi Yang — 5-15-13 SIGN OFF DATE	DESIGN	BY M. Wise	CHECKED D. Kim	LOAD & RESISTANCE FACTOR DESIGN	LIVE LOADING: HL93 W/"LOW-BOY"; PERMIT DESIGN VEHICLE
	DETAILS	BY H. Withers	CHECKED D. Kim	LAYOUT — BY J. Quinoveva	CHECKED C. Weber
	QUANTITIES	BY M. Wise	CHECKED D. Kim	SPECIFICATIONS — BY M. Char	PLANS AND SPECS COMPARED M. Char

PREPARED FOR THE STATE OF CALIFORNIA DEPARTMENT OF TRANSPORTATION

Mohan S. Char
PROJECT ENGINEER

BRIDGE NO. 55E0132
POST MILES 5.80

RETAINING WALL NO. 315L
GENERAL PLAN NO. 2

DESIGN GENERAL PLAN SHEET (ENGLISH) (REV.7/16/10)

ORIGINAL SCALE IN INCHES FOR REDUCED PLANS 0 1 2 3

UNIT:
PROJECT NUMBER & PHASE: 1200020278
CONTRACT NO.: 12-0F96C1

DISREGARD PRINTS BEARING EARLIER REVISION DATES

REVISION DATES: 04-27-12 09-24-12 01-14-13 04-22-13

SHEET 2 OF 14

FILE => 55E0132-a-gp02.dgn

USERNAME => s124436 DATE PLOTTED => 29-AUG-2013 TIME PLOTTED => 09:47

DIST	COUNTY	ROUTE	POST MILES TOTAL PROJECT	SHEET No	TOTAL SHEETS
12	Ora	5	3.7/6.2	755	780

REGISTERED CIVIL ENGINEER — DATE 4/22/13

8-26-13
PLANS APPROVAL DATE

REGISTERED PROFESSIONAL ENGINEER — MOHAN S. CHAR — No. 57894 — Exp. 6/30/14 — CIVIL — STATE OF CALIFORNIA

The State of California or its officers or agents shall not be responsible for the accuracy or completeness of electronic copies of this plan sheet.

ORANGE COUNTY TRANSPORTATION AUTHORITY
550 SOUTH MAIN STREET
ORANGE, CA 92863-1584

AECOM TECHNICAL SERVICES INC.
999 W. TOWN & COUNTRY ROAD
ORANGE, CALIFORNIA 92868

GENERAL NOTES

LOAD AND RESISTANCE FACTOR DESIGN

Design:
AASHTO LRFD Bridge Design Specifications, 4th Edition and the California Amendments, preface dated November 2011.

Soil Parameters:
For earth retaining structures design only

Friction angle (ø) = 27°
Cohesion (c) = 210 psf
Unit Weight (γ) = 120 pcf
Allowable bearing pressure = 2.0 ksf

Structural Shotcrete:
f'c = 5.0 ksi @ 28 days
f'ci = 4.25 ksi @ time of stressing
fy = 60 ksi

Reinforced Concrete:
f'c = 4.0 ksi @ 28 days
fy = 60 ksi

Prestressing Steel:
FDL = Factored Design Load per anchor (kips) (see values shown on "STRUCTURE PLAN NO. 2" sheet)

FTL = Factored Test Load per anchor (kips) (see values shown on "STRUCTURE PLAN NO. 2" sheet)

LL = Lock-Off Load per anchor (kips) (see values shown on "STRUCTURE PLAN NO. 2" sheet)

For additional information, see "SUB HORIZONTAL GROUND ANCHOR DETAILS" sheet.

Structural Steel:
Bearing Plate - ASTM Designation: A572
Fy = 50 ksi

STANDARD PLANS 2010 EDITION

	A10A	ABBREVIATIONS (SHEET 1 OF 2)
	A10B	ABBREVIATIONS (SHEET 2 OF 2)
	A10C	LINES AND SYMBOLS (SHEET 1 OF 3)
	A10D	LINES AND SYMBOLS (SHEET 2 OF 3)
	A10E	LINES AND SYMBOLS (SHEET 3 OF 3)
	A10F	LEGEND - SOIL (SHEET 1 OF 2)
	A10G	LEGEND - SOIL (SHEET 2 OF 2)
	A10H	LEGEND - ROCK
	A76A	CONCRETE BARRIER TYPE 60
	B0-3	BRIDGE DETAILS
	B3-6	RETAINING WALL DETAILS NO. 2
RSP	B11-47	CABLE RAILING

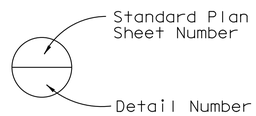

INDEX TO PLANS

No.	Title
1	GENERAL PLAN NO. 1
2	GENERAL PLAN NO. 2
3	GENERAL NOTES & INDEX TO PLANS
4	FOUNDATION PLAN
5	STRUCTURE PLAN NO. 1
6	STRUCTURE PLAN NO. 2
7	RETAINING WALL DETAILS NO. 1
8	RETAINING WALL DETAILS NO. 2
9	DRAINAGE DETAILS
10	SLOPE PAVING DETAILS
11	SLOPE PAVING - FULL SLOPE
12	SUB HORIZONTAL GROUND ANCHOR DETAILS
13	LOG OF TEST BORINGS NO. 1 OF 2
14	LOG OF TEST BORINGS NO. 2 OF 2

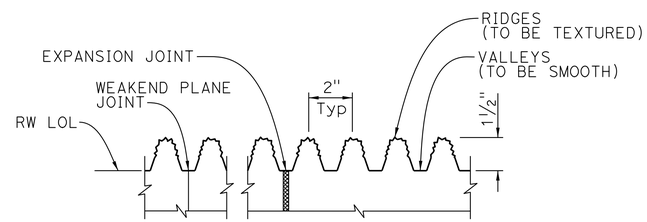

FRACTURED RIB TEXTURE

NO SCALE

Note:
Weakened Plane and Expansion Joints to be centered in valleys

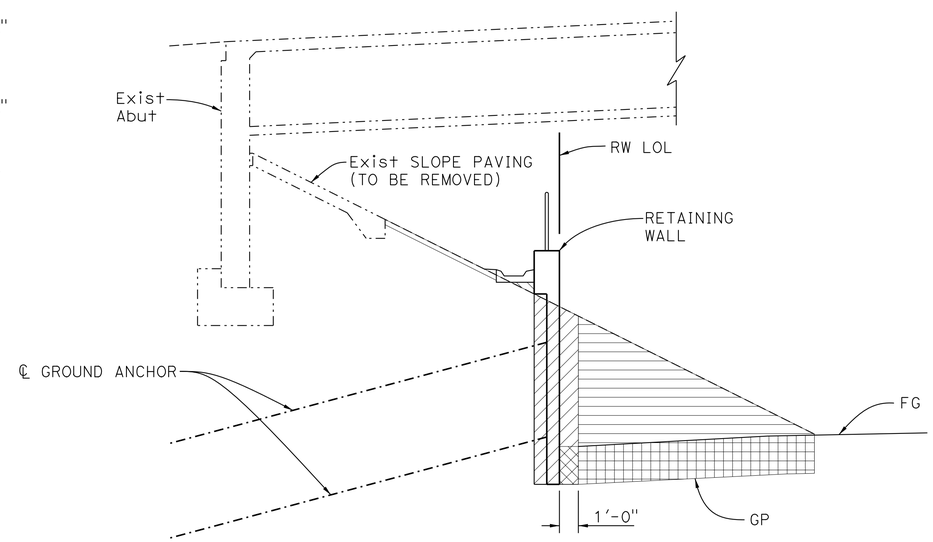

LIMITS OF PAYMENT FOR EXCAVATION AND BACKFILL

No Scale

LEGEND:

- Roadway Excavation, see "ROAD PLANS"
- Roadway Backfill and Structural Section, see "ROAD PLANS"
- Structure Excavation (Ground Anchor Wall)
- Structure Backfill (Ground Anchor Wall)
- Denotes existing structure
- Denotes new construction

NOTE:
THE CONTRACTOR SHALL VERIFY ALL CONTROLLING FIELD DIMENSIONS BEFORE ORDERING OR FABRICATING ANY MATERIAL.

DESIGN OVERSIGHT Luqi Yang — 5-15-13 SIGN OFF DATE

	BY	CHECKED
DESIGN	M. Wise	D. Kim
DETAILS	J. Quinoveva	D. Kim
QUANTITIES	M. Wise	D. Kim

PREPARED FOR THE STATE OF CALIFORNIA DEPARTMENT OF TRANSPORTATION

Mohan S. Char — PROJECT ENGINEER

BRIDGE NO. 55E0132 — POST MILES 5.80

RETAINING WALL NO. 315L
GENERAL NOTES & INDEX TO PLANS

DESIGN DETAIL SHEET (ENGLISH) (REV.7/16/10)

ORIGINAL SCALE IN INCHES FOR REDUCED PLANS 0 1 2 3

UNIT:
PROJECT NUMBER & PHASE: 1200020278 CONTRACT NO.: 12-0F96C1

DISREGARD PRINTS BEARING EARLIER REVISION DATES → 04-27-12 09-24-12 01-14-13 04-22-13

SHEET 3 OF 14

FILE => 55E0132-a-itp.dgn

USERNAME => s124496 DATE PLOTTED => 29-AUG-2013 TIME PLOTTED => 09:47

DIST	COUNTY	ROUTE	POST MILES TOTAL PROJECT	SHEET No	TOTAL SHEETS
12	Ora	5	3.7/6.2	756	780

REGISTERED CIVIL ENGINEER — DATE 4/22/13

8-26-13
PLANS APPROVAL DATE

REGISTERED PROFESSIONAL ENGINEER — MOHAN S. CHAR — No. 57894 — Exp. 6/30/14 — CIVIL — STATE OF CALIFORNIA

The State of California or its officers or agents shall not be responsible for the accuracy or completeness of electronic copies of this plan sheet.

ORANGE COUNTY TRANSPORTATION AUTHORITY
550 SOUTH MAIN STREET
ORANGE, CA 92863-1584

AECOM TECHNICAL SERVICES INC.
999 W. TOWN & COUNTRY ROAD
ORANGE, CALIFORNIA 92868

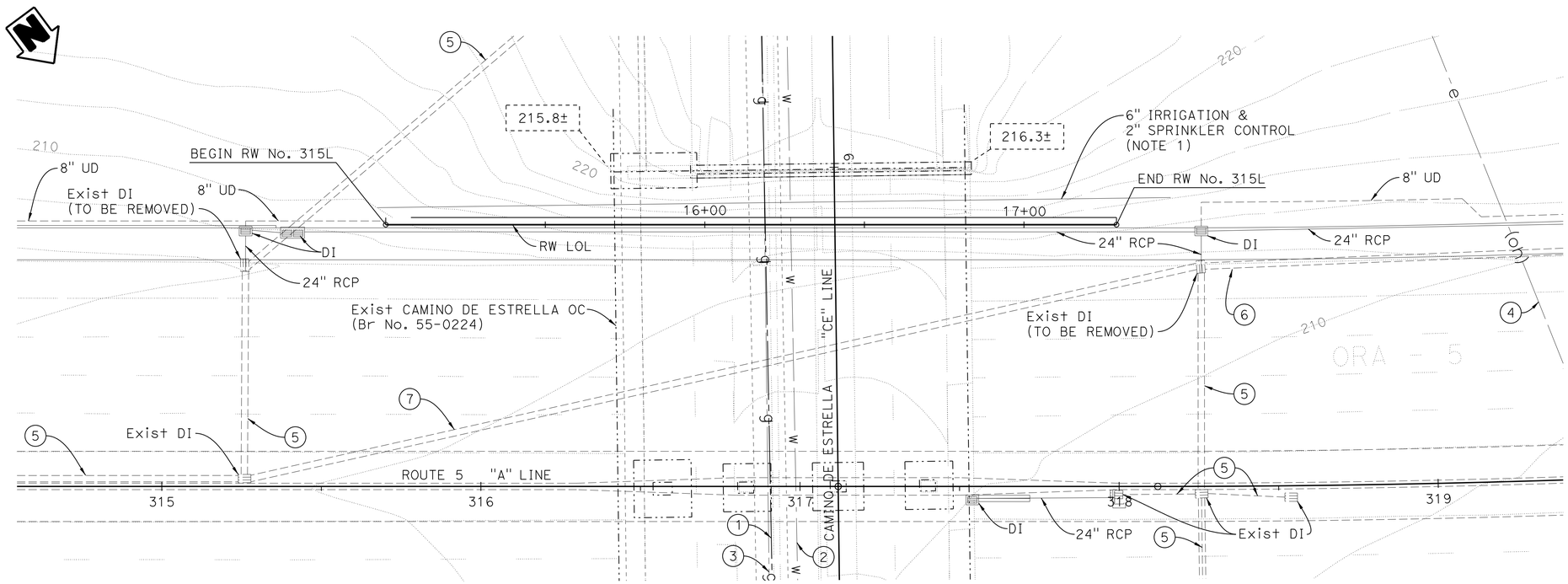

PLAN
1" = 20'

EXISTING UTILITIES

1. 4" Gas in 8" casing (SCG) (within bridge)
2. 10" ACP Water (SCWD) (within bridge)
3. Telephone (AT&T) (within bridge)
4. Electric OH (SDGE)
5. 24" RCP
6. 24" RCP (to be removed)
7. 24" RCP (to be abandoned)

DATUM

Vertical: North American Vertical Datum 1988

Horizontal: California Coordinate System 1983
Epoch (1991.35), Zone VI

As-Built elevations adjusted by adding 2.30 feet to match survey data based on the current vertical datum.

BENCH MARK

Designation: 3SS-2-82 Elev 95.558′

Described by OCS 2003 - found 3¾" OCS aluminum bench mark disk Stamped "3SS-2-82", set in the southeasterly corner of a 4 ft. by 4.5 ft. concrete catch basin. monument is located along the northwesterly side of Avenida Vaquero, 100 ft. northerly of the northerly edge of the San Diego freeway overcrossing of Avenida Vaquero, 23 ft. westerly of the centerline of Vaquero and 29.2 ft. southerly of a street standard no number. Monument is set level with the top of the curb.

NOTE:

1. Approx location shown. For more information, see "ROAD PLANS".

LEGEND:

- Denotes existing structure
- Denotes new construction
- 216.3± — Denotes bottom of existing footing elevation

NOTE:
THE CONTRACTOR SHALL VERIFY ALL CONTROLLING FIELD DIMENSIONS BEFORE ORDERING OR FABRICATING ANY MATERIAL.

GEOTECHNICAL PROFESSIONAL — APPROVAL DATE 1/14/13

Luqi Yang — DESIGN OVERSIGHT — Luqi Yang — 5-15-13 — SIGN OFF DATE

SCALE:	VERT.DATUM NAVD88	HORZ.DATUM CCS83
PHOTOGRAMMETRY AS OF: 4-24-09	ALIGNMENT TIES	
SURVEYED	BY PSOMAS	DRAFTED BY
FIELD CHECKED	BY PSOMAS	CHECKED BY

	BY	CHECKED
DESIGN	M. Wise	D. Kim
DETAILS	J. Quinoveva	D. Kim
QUANTITIES	M. Wise	D. Kim

PREPARED FOR THE STATE OF CALIFORNIA DEPARTMENT OF TRANSPORTATION

Mohan S. Char — PROJECT ENGINEER

BRIDGE NO. 55E0132
POST MILES 5.80

RETAINING WALL NO. 315L
FOUNDATION PLAN

FOUNDATION PLAN SHEET (ENGLISH) (REV.7/16/10)

ORIGINAL SCALE IN INCHES FOR REDUCED PLANS 0 1 2 3

UNIT:
PROJECT NUMBER & PHASE: 1200020278 CONTRACT NO.: 12-0F96C1

DISREGARD PRINTS BEARING EARLIER REVISION DATES

REVISION DATES: 04-27-12 09-24-12 01-14-13 04-22-13 — SHEET 4 OF 14

FILE => 55E0132-e-fpl.dgn

USERNAME => s124496 DATE PLOTTED => 29-AUG-2013 TIME PLOTTED => 09:48

DIST	COUNTY	ROUTE	POST MILES TOTAL PROJECT	SHEET No	TOTAL SHEETS
12	Ora	5	3.7/6.2	757	780

REGISTERED CIVIL ENGINEER 4/22/13 DATE

8-26-13
PLANS APPROVAL DATE

REGISTERED PROFESSIONAL ENGINEER MOHAN S. CHAR No. 57894 Exp. 6/30/14 CIVIL STATE OF CALIFORNIA

The State of California or its officers or agents shall not be responsible for the accuracy or completeness of electronic copies of this plan sheet.

ORANGE COUNTY TRANSPORTATION AUTHORITY
550 SOUTH MAIN STREET
ORANGE, CA 92863-1584

AECOM TECHNICAL SERVICES INC.
999 W. TOWN & COUNTRY ROAD
ORANGE, CALIFORNIA 92868

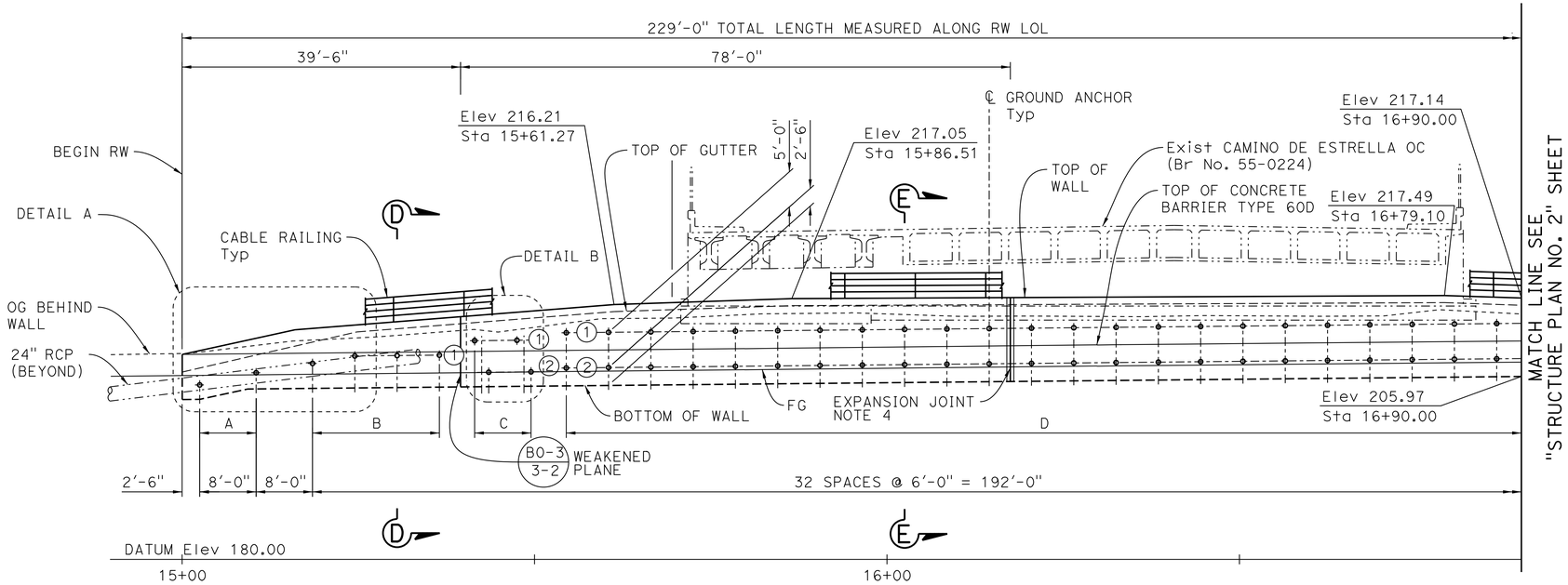

ELEVATION
1" = 10'

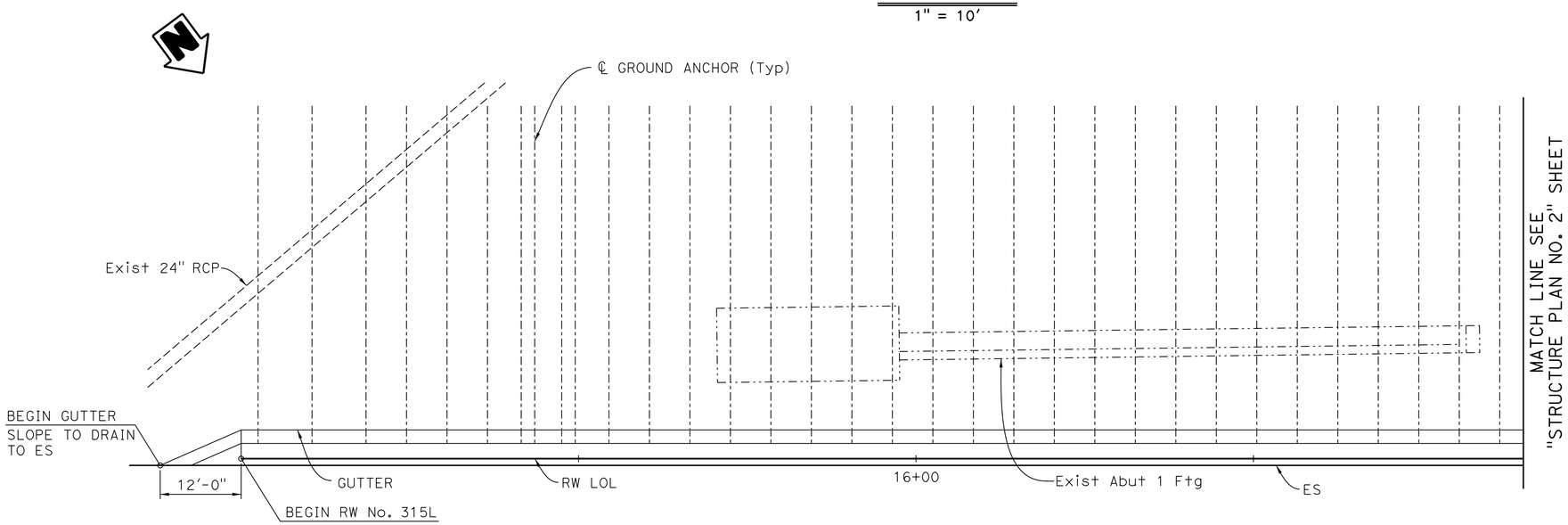

PLAN
1" = 10'

NOTES:

1. Horizontal dimensions are measured along RW LOL.
2. For wall drainage, see "DRAINAGE DETAILS" sheet.
3. For ground anchor tendon forces, minimum ground anchor unbonded length and ground anchor inclination, see "STRUCTURE PLAN NO. 2" sheet.
4. Expansion joints are in the CIP concrete only. For "EXPANSION JOINT DETAIL" see "RETAINING WALL DETAILS NO. 2" sheet.
5. For "SECTION D-D" and "SECTION E-E", see "RETAINING WALL DETAILS NO. 1" sheet.
6. For "DETAIL A" and "DETAIL B", see "STRUCTURE PLAN NO. 2" sheet.

LEGEND:

—·—·· Denotes existing structure

∘ Ground Anchor Location

(1) Ground Anchor Row No.

A Location ID

NOTE:
THE CONTRACTOR SHALL VERIFY ALL CONTROLLING FIELD DIMENSIONS BEFORE ORDERING OR FABRICATING ANY MATERIAL.

DESIGN OVERSIGHT Luqi Yang
5-15-13
SIGN OFF DATE

	BY	CHECKED
DESIGN	M. Wise	D. Kim
DETAILS	J. Quinoveva	D. Kim
QUANTITIES	M. Wise	D. Kim

PREPARED FOR THE STATE OF CALIFORNIA DEPARTMENT OF TRANSPORTATION

Mohan S. Char
PROJECT ENGINEER

BRIDGE NO. 55E0132
POST MILES 5.80

RETAINING WALL NO. 315L
STRUCTURE PLAN NO. 1

DESIGN DETAIL SHEET (ENGLISH) (REV.7/16/10)

ORIGINAL SCALE IN INCHES FOR REDUCED PLANS 0 1 2 3

UNIT:
PROJECT NUMBER & PHASE: 1200020278 CONTRACT NO.: 12-0F96C1

DISREGARD PRINTS BEARING EARLIER REVISION DATES

REVISION DATES 04-27-12 09-24-12 01-14-13 04-22-13

SHEET 5 OF 14

FILE => 55E0132-g-sp01.dgn

USERNAME => s124496 DATE PLOTTED => 29-AUG-2013 TIME PLOTTED => 09:48

DIST	COUNTY	ROUTE	POST MILES TOTAL PROJECT	SHEET No	TOTAL SHEETS
12	Ora	5	3.7/6.2	758	780

REGISTERED CIVIL ENGINEER — DATE 4/22/13

8-26-13
PLANS APPROVAL DATE

REGISTERED PROFESSIONAL ENGINEER — MOHAN S. CHAR — No. 57894 — Exp. 6/30/14 — CIVIL — STATE OF CALIFORNIA

The State of California or its officers or agents shall not be responsible for the accuracy or completeness of electronic copies of this plan sheet.

ORANGE COUNTY TRANSPORTATION AUTHORITY
550 SOUTH MAIN STREET
ORANGE, CA 92863-1584

AECOM TECHNICAL SERVICES INC.
999 W. TOWN & COUNTRY ROAD
ORANGE, CALIFORNIA 92868

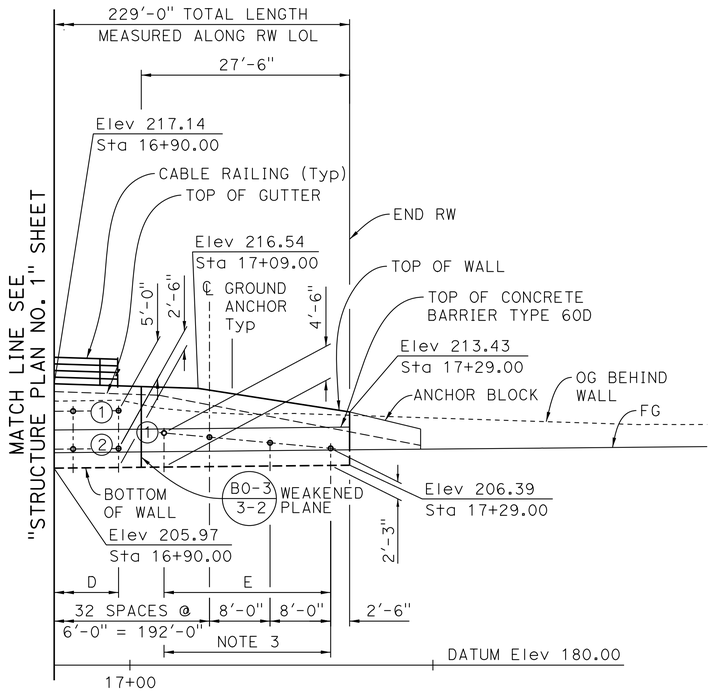

ELEVATION
1" = 10'

FACTORED DESIGN LOAD PER ANCHOR (KIPS)					
	LOCATION ID				
ROW No.	A	B	C	D	E
1	70	100	65	115	110
2	-	-	55	90	-

FACTORED TEST LOAD PER ANCHOR (KIPS)					
	LOCATION ID				
ROW No.	A	B	C	D	E
1	90	125	80	145	140
2	-	-	65	115	-

LOCK-OFF LOAD PER ANCHOR (KIPS)					
	LOCATION ID				
ROW No.	A	B	C	D	E
1	40	55	35	80	60
2	-	-	35	60	-

GROUND ANCHOR UNBONDED LENGTH (MINIMUM) (FT)					
	LOCATION ID				
ROW No.	A	B	C	D	E
1	15	15	15	25	15
2	-	-	15	25	-

NOTE: The contractor must determine the bonded length. The minimum bonded length must be 15'-0".

GROUND ANCHOR INCLINATION, θ (DEGREE)					
	LOCATION ID				
ROW No.	A	B	C	D	E
1	10	10	10	10	10
2	-	-	10	10	-

LEGEND:

- ∘ Ground Anchor Location
- (1) Ground Anchor Row No.
- D Location ID

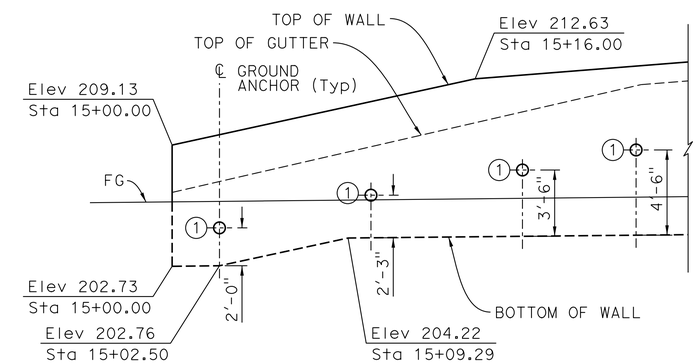

DETAIL A
¼" = 1'-0"

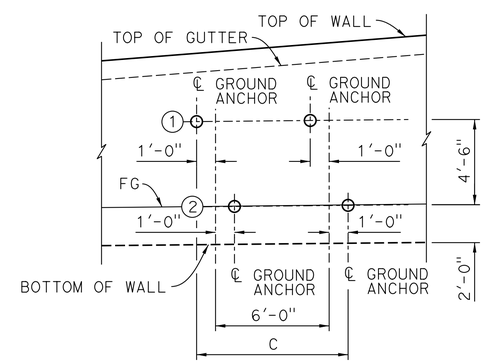

DETAIL B
¼" = 1'-0"

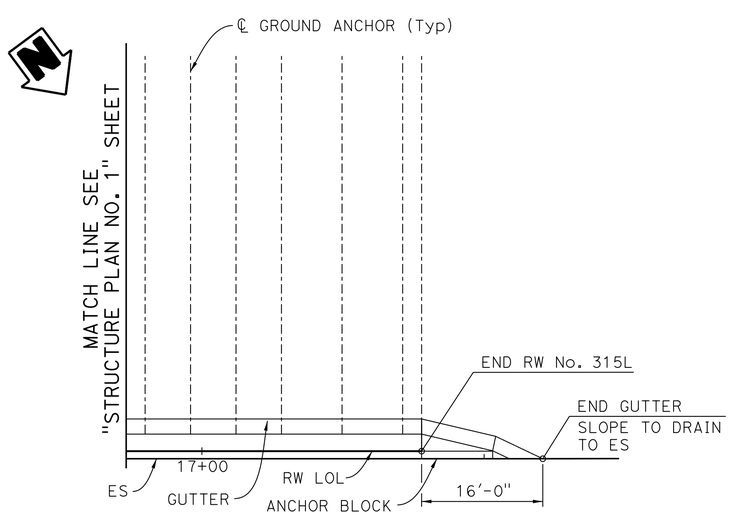

PLAN
1" = 10'

NOTES:

1. Horizontal dimensions are measured along RW LOL.
2. For wall drainage, see "DRAINAGE DETAILS" sheet.
3. Vertical dimension of ground anchor varies linearly between 4'-6" and 2'-3" in this region.

NOTE:
THE CONTRACTOR SHALL VERIFY ALL CONTROLLING FIELD DIMENSIONS BEFORE ORDERING OR FABRICATING ANY MATERIAL.

DESIGN OVERSIGHT — Luqi Yang — 5-15-13 — SIGN OFF DATE

	BY	CHECKED
DESIGN	M. Wise	D. Kim
DETAILS	J. Quinoveva	D. Kim
QUANTITIES	M. Wise	D. Kim

PREPARED FOR THE STATE OF CALIFORNIA DEPARTMENT OF TRANSPORTATION

Mohan S. Char — PROJECT ENGINEER

BRIDGE NO. 55E0132
POST MILES 5.80

RETAINING WALL NO. 315L
STRUCTURE PLAN NO. 2

DESIGN DETAIL SHEET (ENGLISH) (REV.7/16/10)

ORIGINAL SCALE IN INCHES FOR REDUCED PLANS 0 1 2 3

UNIT:
PROJECT NUMBER & PHASE: 1200020278
CONTRACT NO.: 12-0F96C1

DISREGARD PRINTS BEARING EARLIER REVISION DATES — REVISION DATES 04-21-12 09-24-12 01-14-13 04-22-13 — SHEET 6 OF 14

FILE => 55E0132-g-sp02.dgn

USERNAME => s124436 DATE PLOTTED => 29-AUG-2013 TIME PLOTTED => 09:48

DIST	COUNTY	ROUTE	POST MILES TOTAL PROJECT	SHEET No	TOTAL SHEETS
12	Ora	5	3.7/6.2	759	780

REGISTERED CIVIL ENGINEER — DATE 4/22/13

8-26-13
PLANS APPROVAL DATE

REGISTERED PROFESSIONAL ENGINEER — MOHAN S. CHAR — No. 57894 — Exp. 6/30/14 — CIVIL — STATE OF CALIFORNIA

The State of California or its officers or agents shall not be responsible for the accuracy or completeness of electronic copies of this plan sheet.

ORANGE COUNTY TRANSPORTATION AUTHORITY
550 SOUTH MAIN STREET
ORANGE, CA 92863-1584

AECOM TECHNICAL SERVICES INC.
999 W. TOWN & COUNTRY ROAD
ORANGE, CALIFORNIA 92868

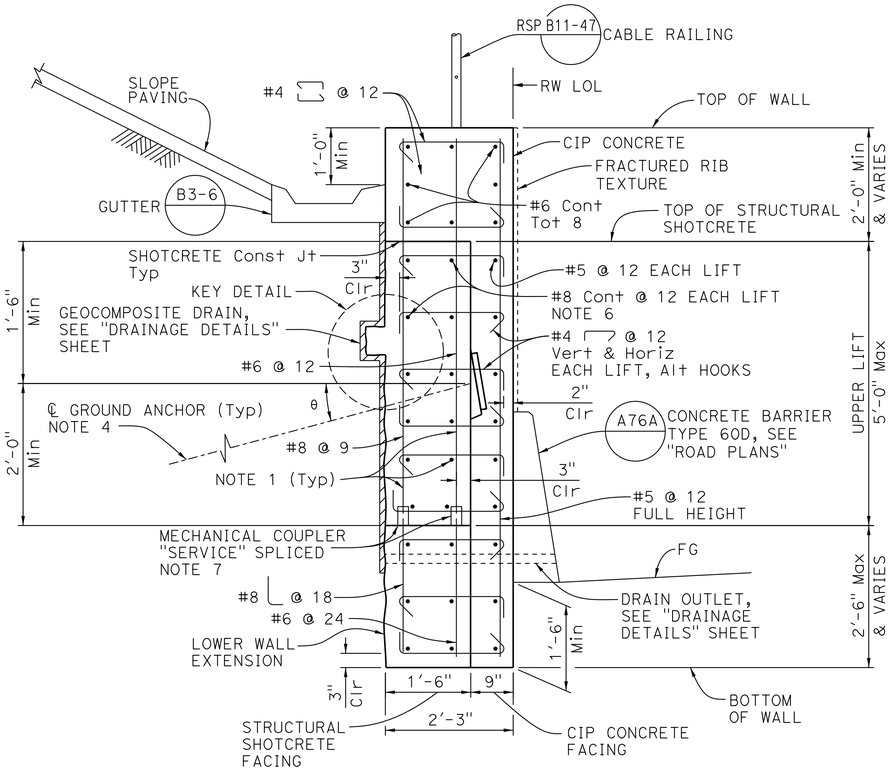

SECTION D-D

¾" = 1'-0

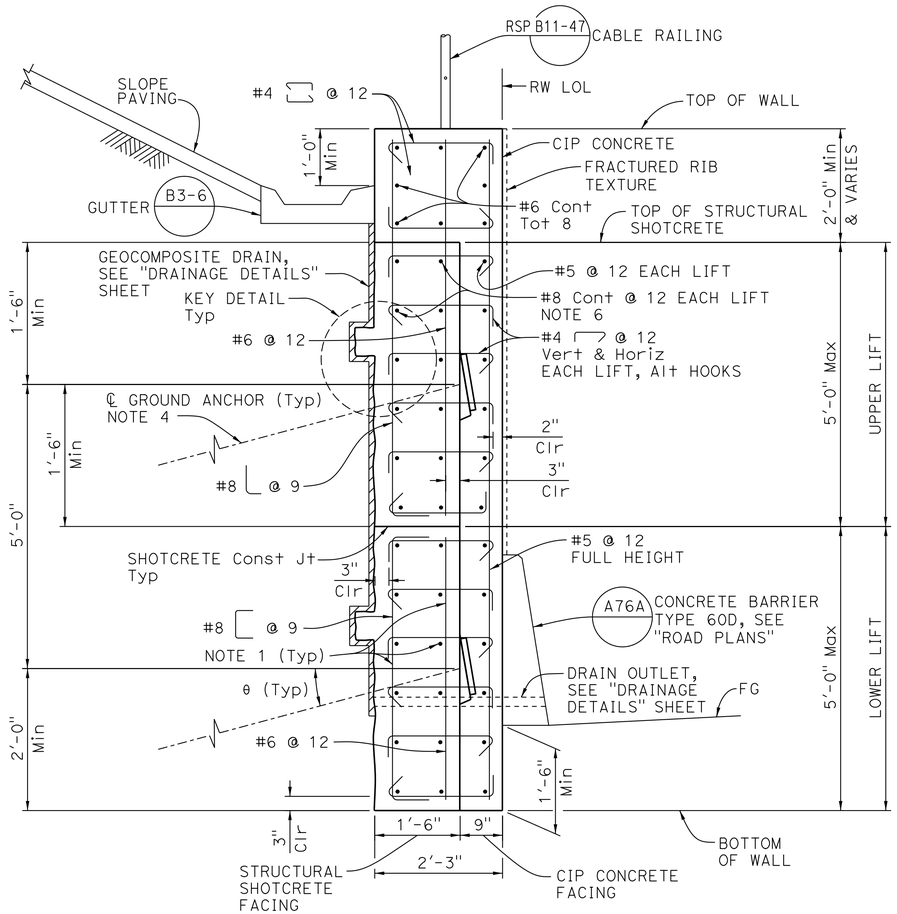

SECTION E-E

¾" = 1'-0

NOTES:

1. Adjust horizontal and vertical reinforcing spacing to avoid conflict with ground anchor assembly in structural shotcrete facing. Bars should not be shifted more than 6" from original position and the total number of bars must remain equal.
2. CIP concrete to be placed after completion of all structual shotcrete lifts.
3. Ground anchors shall be constructed and locked off one at a time beginning at the top and working down, in accordance with staging requirements.
4. For ground anchor inclination, see "STRUCTURE PLAN NO. 2" sheet.
5. All ground anchors within the upper lift shall be installed prior to commencing the lower lift excavations, in accordance with staging requirements.
6. #8 Cont @ 12 reinforcement shall be "Service" Spliced with mechanical couplers.
7. Where lower wall extensions are needed, extend reinforcing bars using mechanical couplers.
8. For "KEY DETAIL", see "RETAINING WALL DETAILS NO. 2" sheet.

NOTE:
THE CONTRACTOR SHALL VERIFY ALL CONTROLLING FIELD DIMENSIONS BEFORE ORDERING OR FABRICATING ANY MATERIAL.

DESIGN OVERSIGHT — Luqi Yang
5-15-13
SIGN OFF DATE

	BY	CHECKED
DESIGN	M. Wise	D. Kim
DETAILS	H. Withers	D. Kim
QUANTITIES	M. Wise	D. Kim

PREPARED FOR THE STATE OF CALIFORNIA DEPARTMENT OF TRANSPORTATION

Mohan S. Char
PROJECT ENGINEER

BRIDGE NO. 55E0132
POST MILES 5.80

RETAINING WALL NO. 315L
RETAINING WALL DETAILS NO. 1

DESIGN DETAIL SHEET (ENGLISH) (REV.7/16/10)

ORIGINAL SCALE IN INCHES FOR REDUCED PLANS 0 1 2 3

UNIT:
PROJECT NUMBER & PHASE: 1200020278
CONTRACT NO.: 12-0F96C1

DISREGARD PRINTS BEARING EARLIER REVISION DATES

REVISION DATES: 04-27-12 09-24-12 01-14-13 04-22-13

SHEET 7 OF 14

FILE => 55E0132-h-twdt01.dgn

USERNAME => s124496 DATE PLOTTED => 29-AUG-2013 TIME PLOTTED => 09:48

DIST	COUNTY	ROUTE	POST MILES TOTAL PROJECT	SHEET No	TOTAL SHEETS
12	Ora	5	3.7/6.2	760	780

REGISTERED CIVIL ENGINEER — DATE 4/22/13

8-26-13
PLANS APPROVAL DATE

REGISTERED PROFESSIONAL ENGINEER — MOHAN S. CHAR — No. 57894 — Exp. 6/30/14 — CIVIL — STATE OF CALIFORNIA

The State of California or its officers or agents shall not be responsible for the accuracy or completeness of electronic copies of this plan sheet.

ORANGE COUNTY TRANSPORTATION AUTHORITY
550 SOUTH MAIN STREET
ORANGE, CA 92863-1584

AECOM TECHNICAL SERVICES INC.
999 W. TOWN & COUNTRY ROAD
ORANGE, CALIFORNIA 92868

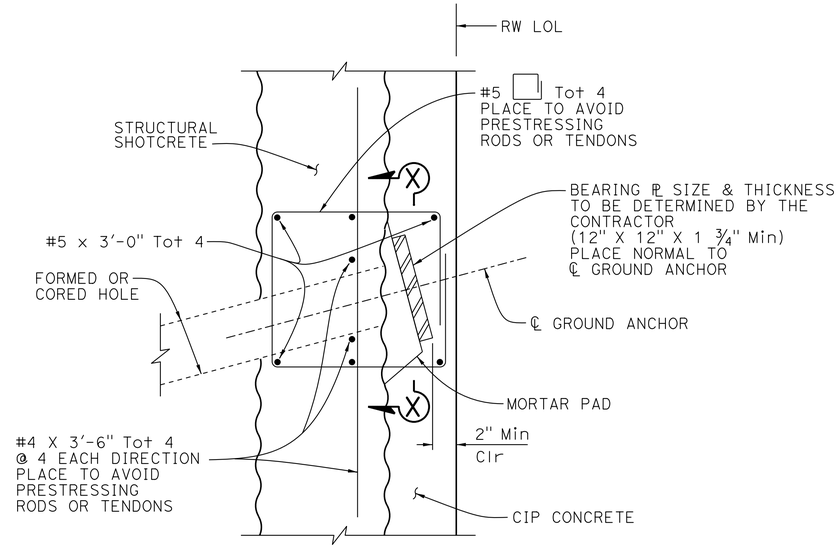

GROUND ANCHOR DETAILS

No Scale

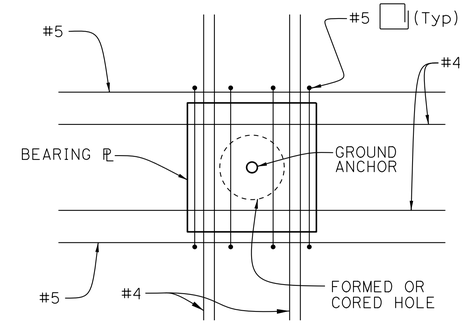

SECTION X-X

No Scale

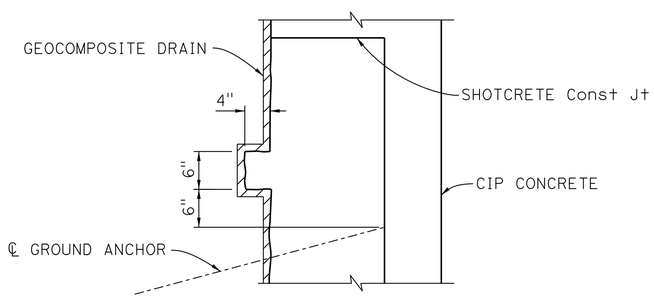

NOTE:

1. Reinforcing steel not shown for clarity.

KEY DETAIL

No Scale

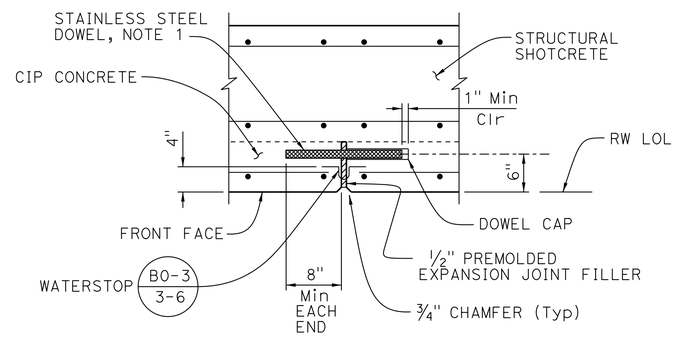

NOTE:

1. Smooth stainless steel 1 1/4" Dia x 18" dowels @ 12" C-C after one end is cast into first pour debond full length of exposed dowel by coating with a debonding agent prior to the second pour. Provide cap for 1" minimum expansion.

EXPANSION JOINT DETAIL

No Scale

NOTE:
THE CONTRACTOR SHALL VERIFY ALL CONTROLLING FIELD DIMENSIONS BEFORE ORDERING OR FABRICATING ANY MATERIAL.

DESIGN OVERSIGHT — Luqi Yang
5-15-13
SIGN OFF DATE

	BY	CHECKED
DESIGN	M. Wise	D. Kim
DETAILS	H. Withers	D. Kim
QUANTITIES	M. Wise	D. Kim

PREPARED FOR THE STATE OF CALIFORNIA DEPARTMENT OF TRANSPORTATION

Mohan S. Char
PROJECT ENGINEER

BRIDGE NO. 55E0132
POST MILES 5.80

RETAINING WALL NO. 315L
RETAINING WALL DETAILS NO. 2

DESIGN DETAIL SHEET (ENGLISH) (REV.7/16/10)

ORIGINAL SCALE IN INCHES FOR REDUCED PLANS 0 1 2 3

UNIT:
PROJECT NUMBER & PHASE: 1200020278
CONTRACT NO.: 12-0F96C1

DISREGARD PRINTS BEARING EARLIER REVISION DATES
REVISION DATES: 04-21-12 05-24-12 01-14-13 04-22-13
SHEET 8 OF 14

FILE => 55E0132-h-twdt02.dgn

USERNAME => s124496 DATE PLOTTED => 29-AUG-2013 TIME PLOTTED => 09:48

DIST	COUNTY	ROUTE	POST MILES TOTAL PROJECT	SHEET No	TOTAL SHEETS
12	Ora	5	3.7/6.2	761	780

REGISTERED CIVIL ENGINEER — DATE 4/22/13

8-26-13
PLANS APPROVAL DATE

REGISTERED PROFESSIONAL ENGINEER — MOHAN S. CHAR — No. 57894 — Exp. 6/30/14 — CIVIL — STATE OF CALIFORNIA

The State of California or its officers or agents shall not be responsible for the accuracy or completeness of electronic copies of this plan sheet.

ORANGE COUNTY TRANSPORTATION AUTHORITY
550 SOUTH MAIN STREET
ORANGE, CA 92863-1584

AECOM TECHNICAL SERVICES INC.
999 W. TOWN & COUNTRY ROAD
ORANGE, CALIFORNIA 92868

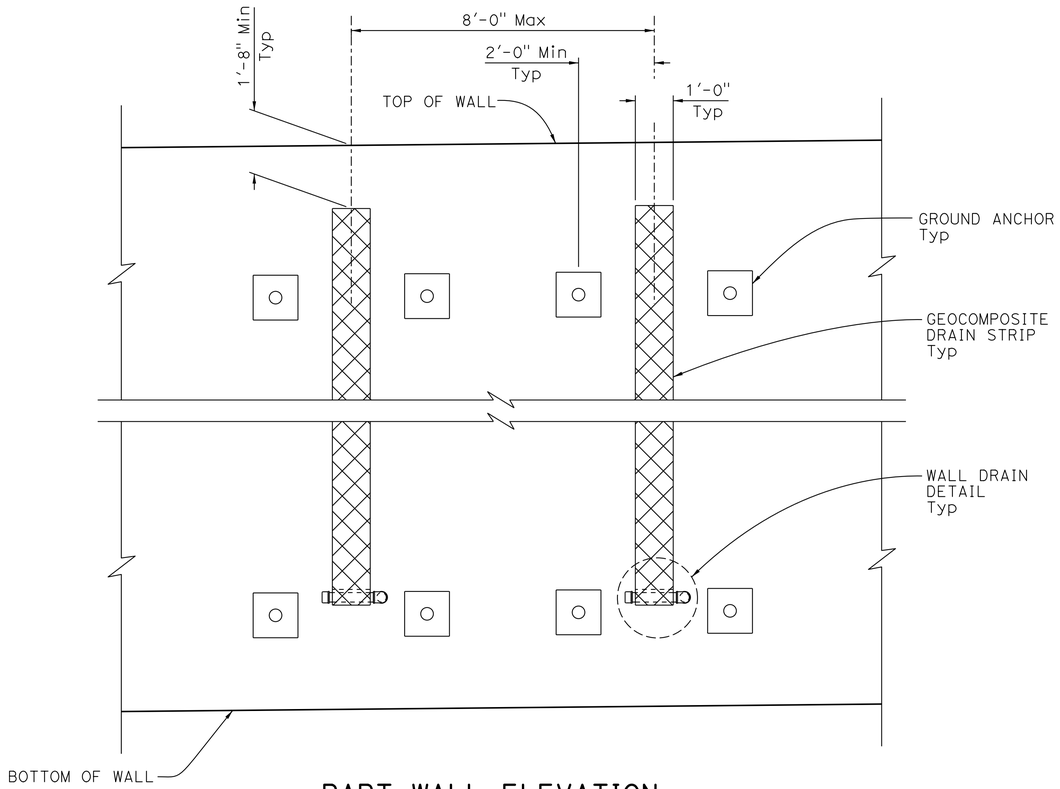

PART WALL ELEVATION

No Scale

NOTE:

1. Geocomposite drain strip per Section 88 Geosynthetics of the Standard Specifications.

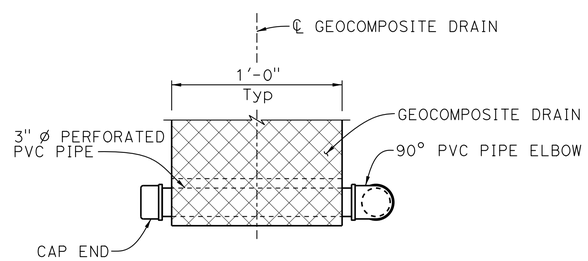

VIEW A-A

No Scale

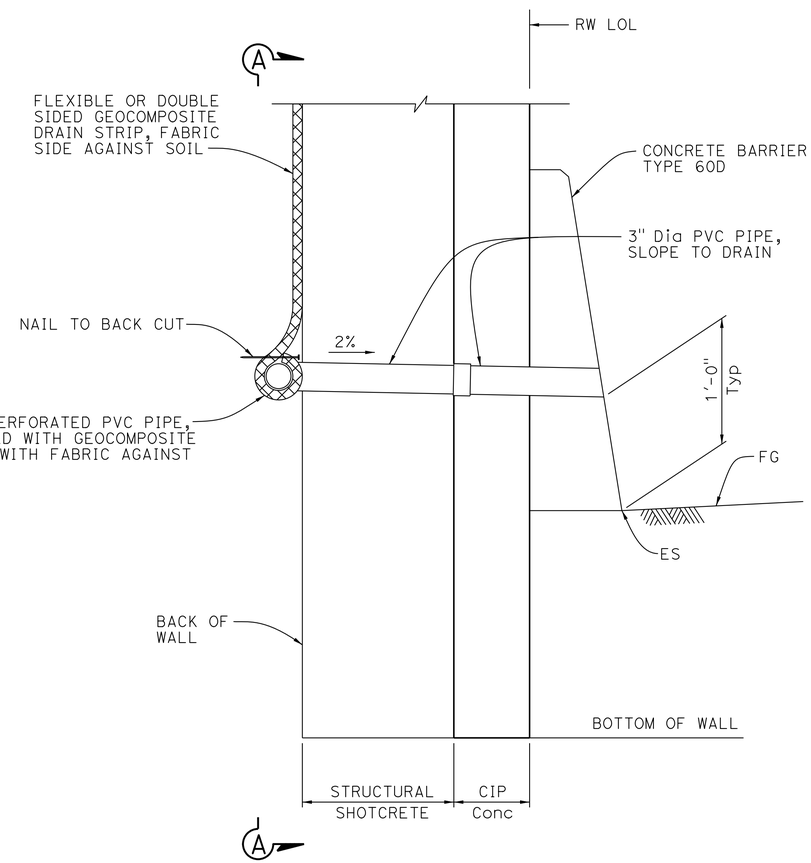

WALL DRAIN DETAIL

No Scale

NOTE:
THE CONTRACTOR SHALL VERIFY ALL CONTROLLING FIELD DIMENSIONS BEFORE ORDERING OR FABRICATING ANY MATERIAL.

Luqi Yang
DESIGN OVERSIGHT — Luqi Yang
5-15-13
SIGN OFF DATE

	BY	CHECKED
DESIGN	M. Wise	D. Kim
DETAILS	H. Withers	D. Kim
QUANTITIES	M. Wise	D. Kim

PREPARED FOR THE STATE OF CALIFORNIA DEPARTMENT OF TRANSPORTATION

Mohan S. Char
PROJECT ENGINEER

BRIDGE NO. 55E0132
POST MILES 5.80

RETAINING WALL NO. 315L
DRAINAGE DETAILS

DESIGN DETAIL SHEET (ENGLISH) (REV.7/16/10)

ORIGINAL SCALE IN INCHES FOR REDUCED PLANS 0 1 2 3

UNIT:
PROJECT NUMBER & PHASE: 1200020278
CONTRACT NO.: 12-0F96C1

DISREGARD PRINTS BEARING EARLIER REVISION DATES
REVISION DATES: 04-27-12 09-24-12 01-14-13 04-22-13
SHEET 9 OF 14

FILE => 55E0132-r-twdd.dgn

USERNAME => s124496 DATE PLOTTED => 29-AUG-2013 TIME PLOTTED => 10:04

DIST	COUNTY	ROUTE	POST MILES TOTAL PROJECT	SHEET No	TOTAL SHEETS
12	Ora	5	3.7/6.2	762	780

REGISTERED CIVIL ENGINEER 4/22/13 DATE

8-26-13
PLANS APPROVAL DATE

REGISTERED PROFESSIONAL ENGINEER MOHAN S. CHAR No. 57894 Exp. 6/30/14 CIVIL STATE OF CALIFORNIA

The State of California or its officers or agents shall not be responsible for the accuracy or completeness of electronic copies of this plan sheet.

ORANGE COUNTY TRANSPORTATION AUTHORITY
550 SOUTH MAIN STREET
ORANGE, CA 92863-1584

AECOM TECHNICAL SERVICES INC.
999 W. TOWN & COUNTRY ROAD
ORANGE, CALIFORNIA 92868

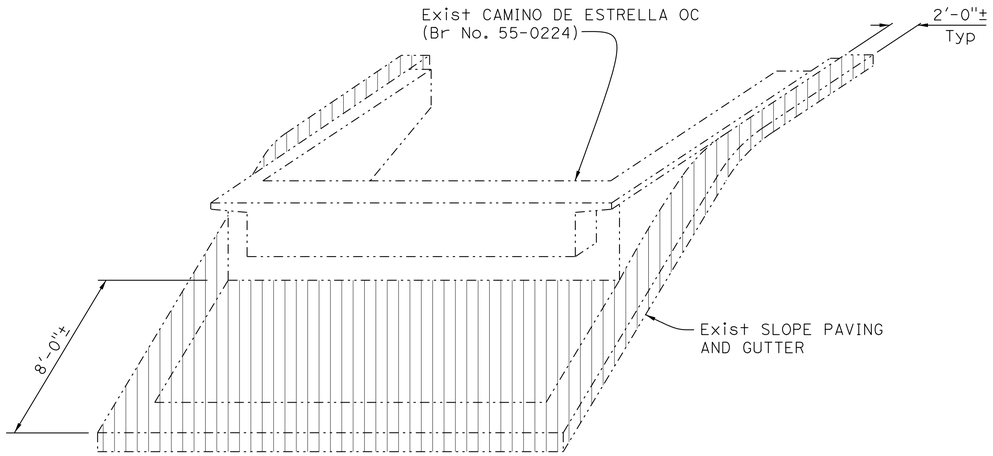

PICTORIAL VIEW

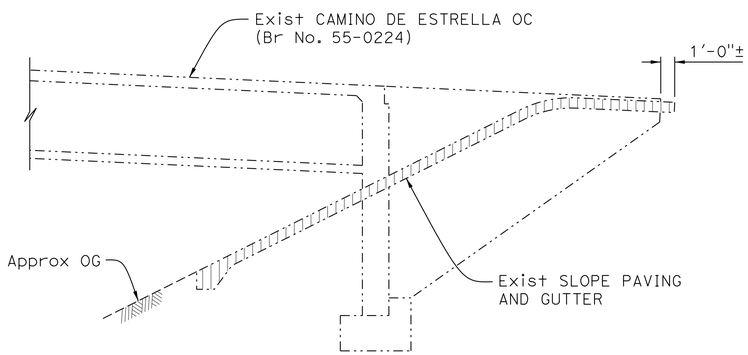

WINGWALL ELEVATION

SLOPE PAVING REMOVAL LIMITS

NO SCALE

LEGEND:

Slope paving removal

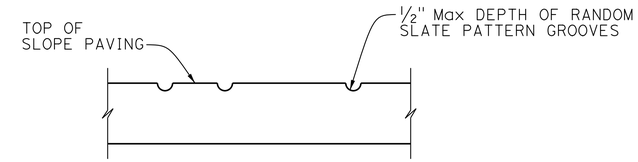

RANDOM SLATE PATTERN

NO SCALE

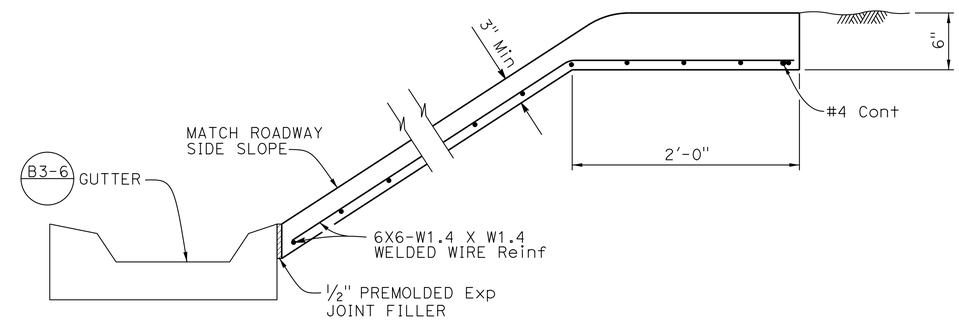

TYPICAL SECTION - CONCRETE PAVING (OUTSIDE BRIDGE)

NO SCALE

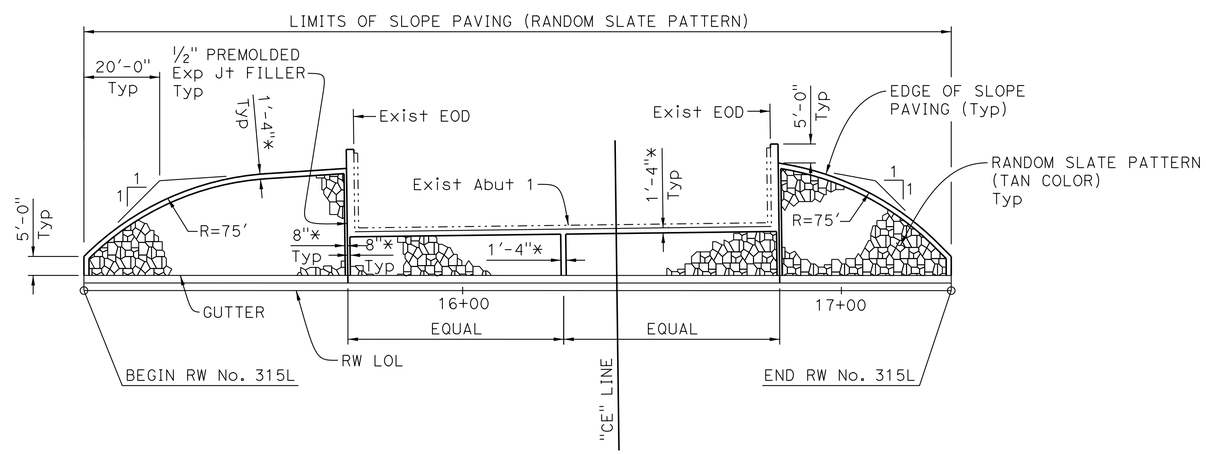

LIMITS OF SLOPE PAVING

1" = 20'

* WIDTH OF STIFF BROOM FINISH

NOTE:
THE CONTRACTOR SHALL VERIFY ALL CONTROLLING FIELD DIMENSIONS BEFORE ORDERING OR FABRICATING ANY MATERIAL.

Luqi Yang
DESIGN OVERSIGHT Luqi Yang
5-15-13
SIGN OFF DATE

	BY	CHECKED
DESIGN	M. Wise	D. Kim
DETAILS	R. Andrasek	D. Kim
QUANTITIES	M. Wise	D. Kim

PREPARED FOR THE STATE OF CALIFORNIA DEPARTMENT OF TRANSPORTATION

Mohan S. Char
PROJECT ENGINEER

BRIDGE NO. 55E0132
POST MILES 5.80

RETAINING WALL NO. 315L
SLOPE PAVING DETAILS

DESIGN DETAIL SHEET (ENGLISH) (REV.7/16/10)

ORIGINAL SCALE IN INCHES FOR REDUCED PLANS 0 1 2 3

UNIT:
PROJECT NUMBER & PHASE: 1200020278 CONTRACT NO.: 12-0F96C1

DISREGARD PRINTS BEARING EARLIER REVISION DATES

REVISION DATES: 04-27-12 09-24-12 01-14-13 04-22-13

SHEET 10 OF 14

FILE => 55E0132-y-spdt01.dgn

USERNAME => s124496 DATE PLOTTED => 29-AUG-2013 TIME PLOTTED => 10:04

DIST	COUNTY	ROUTE	POST MILES TOTAL PROJECT	SHEET No.	TOTAL SHEETS
12	Ora	5	3.7/6.2	763	780

REGISTERED CIVIL ENGINEER — DATE 4/22/13

8-26-13
PLANS APPROVAL DATE

REGISTERED PROFESSIONAL ENGINEER — Mohan S. Char — No. 57894 — Exp. 6/30/14 — CIVIL — STATE OF CALIFORNIA

The State of California or its officers or agents shall not be responsible for the accuracy or completeness of electronic copies of this plan sheet.

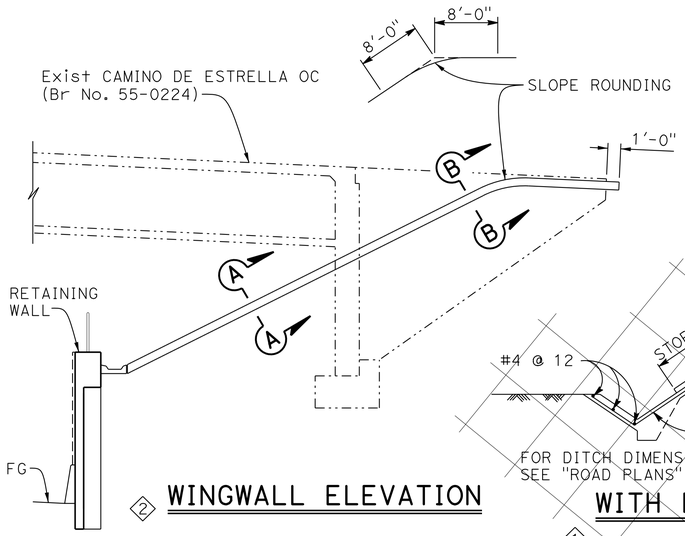

2 WINGWALL ELEVATION

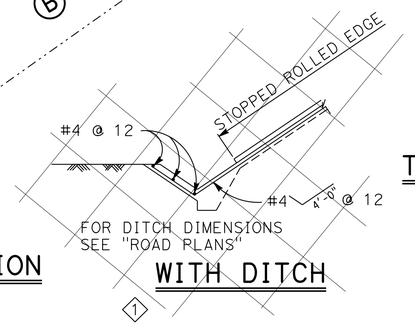

1 WITH DITCH

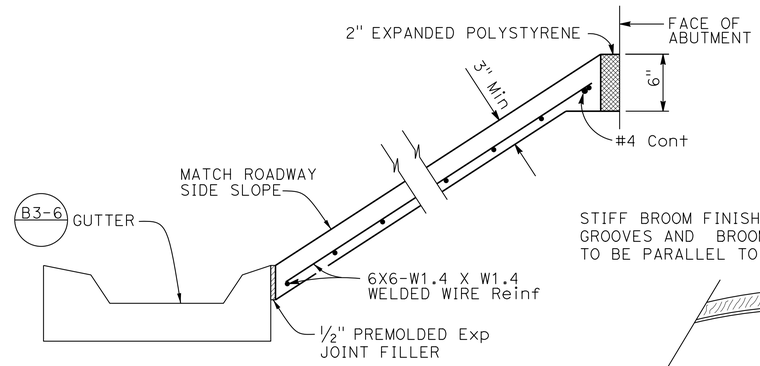

TYPICAL SECTION - CONCRETE PAVING 2
(UNDER BRIDGE)

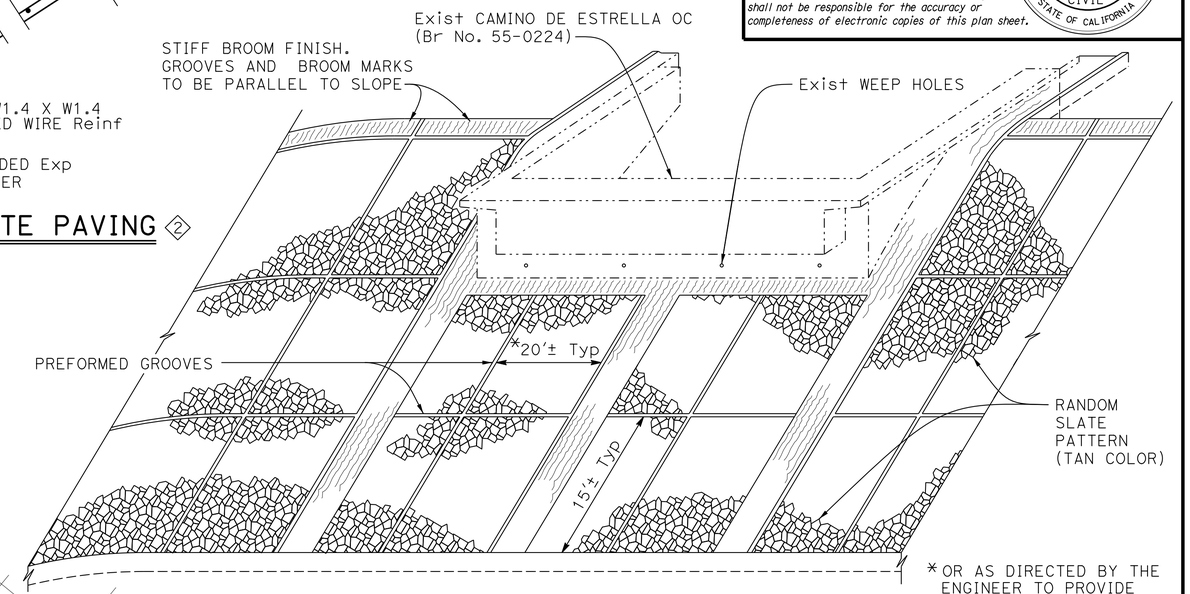

*OR AS DIRECTED BY THE ENGINEER TO PROVIDE UNIFORM SPACING

PICTORIAL VIEW OF TYPICAL INSTALLATION 2

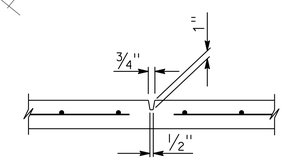

PREFORMED GROOVE

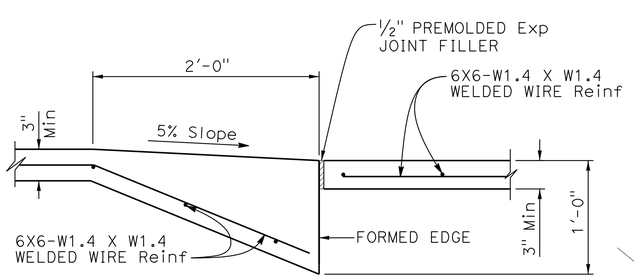

SECTION A-A 2

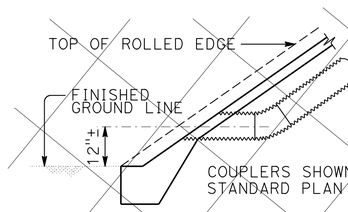

TYPICAL - NO CURB

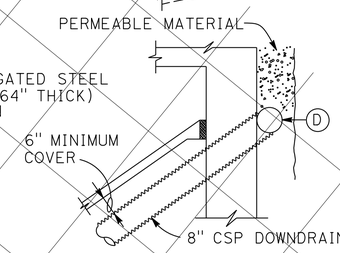

TYPICAL - DRAIN CONNECTION

NOTE:
3 For actual limits of slope paving on this project and architectural details, see "SLOPE PAVING DETAILS" sheet.

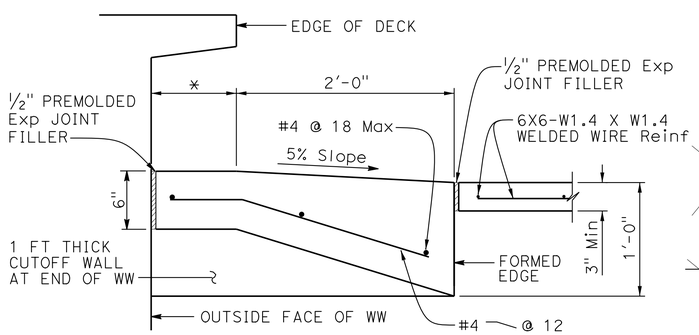

2 SECTION B-B

*THIS DIMENSION BECOMES ZERO WHEN EDGE OF DECK IS AT OUTSIDE FACE OF WW

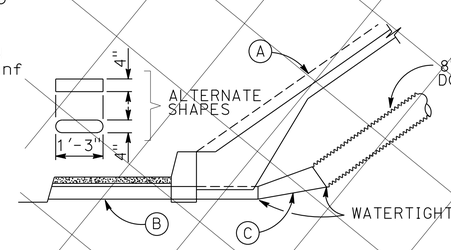

TYPICAL - WITH SIDEWALK

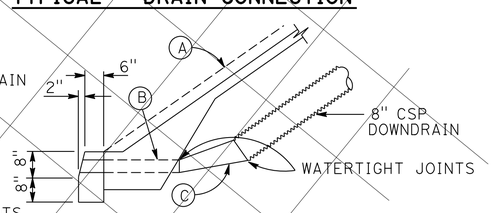

TYPICAL - WITH CURB

1 DRAINAGE DETAILS

NOTE:
Drainage details are only applicable when is indicated on detail sheets.

BO-3
3-5

1 LIMITS OF SLOPE PAVING & DRAINAGE LAYOUT

(A) Top of rolled edge

(B) Conduit:
0.064" galv corrugated steel or 0.109" smooth galv steel

(C) Taper: { 0.064" galv corrugated steel or 0.109" smooth galv steel

(D) 8" perforated steel pipe (0.064" thick) underdrain behind abutment. Connect to downdrain as shown on limits of Slope Paving & Drainage layout.

NO SCALE

SPECIAL DETAILS

REVISED STANDARD DRAWING

FILE NO. xs4-210

APPROVAL DATE July 2011

1 DOES NOT APPLY
2 REVISED DETAIL
3 REVISED NOTE

STATE OF CALIFORNIA
DEPARTMENT OF TRANSPORTATION

DIVISION OF ENGINEERING SERVICES

BRIDGE NO. 55E0132
POST MILE 5.80

RETAINING WALL NO. 315L
SLOPE PAVING - FULL SLOPE

DS OSD 2147A (ENGLISH STANDARD DRAWING "XS" BORDER REV. (02-02-11)

ORIGINAL SCALE IN INCHES FOR REDUCED PLANS 0 1 2 3

UNIT:
PROJECT NUMBER & PHASE: 1200020278

CONTRACT NO.: 12-0F96C1

DISREGARD PRINTS BEARING EARLIER REVISION DATES

REVISION DATES: 04-27-12 09-24-12 01-14-13 04-22-13

SHEET 11 OF 14

FILE => 55E0132-y-spdt02.dgn

USERNAME => s124496 DATE PLOTTED => 29-AUG-2013 TIME PLOTTED => 10:04

DIST	COUNTY	ROUTE	POST MILES TOTAL PROJECT	SHEET No.	TOTAL SHEETS
12	Ora	5	3.7/6.2	764	780

MSchar
REGISTERED CIVIL ENGINEER 4/22/13 DATE

8-26-13
PLANS APPROVAL DATE

REGISTERED PROFESSIONAL ENGINEER MOHAN S. CHAR No. 57894 Exp. 6/30/14 CIVIL STATE OF CALIFORNIA

The State of California or its officers or agents shall not be responsible for the accuracy or completeness of electronic copies of this plan sheet.

GENERAL NOTES

DESIGN:

AASHTO LRFD Bridge Design Specifications, 4th Edition with California Amendments.

PRESTRESSING STEEL:

Bars - ASTM Designation: A722 Type II (150 ksi)

Strand Tendons-ASTM Designation: A416 (270 Ksi Low Relaxation steel)

FTL = Factored Test Load per anchor (Kips)

fpu = Minimum tensile strength of prestressing steel

As = Minimum cross sectional area of prestressing steel in ground anchor (square inch)

$$As(Min) = \frac{1.0\ FTL}{0.75\ fpu} \quad \text{(Strands)}$$

$$As(Min) = \frac{1.0\ FTL}{0.80\ fpu} \quad \text{(Bars)}$$

NOTES:

(A) Level of initial grouting for drilled hole 6" in diameter or smaller

(B) Level of secondary grouting

(C) Level of initial grouting inside corrugated sheathing

(D) Bonded length shall be determined by the contractor

(E) For unbonded length, see STRUCTURE PLAN NO. 2 sheet

(F) For inclination, see STRUCTURE PLAN NO. 2 sheet

(G) Face of Wall Excavation

NOTES:

1. Anchorage enclosure shall only be used when anchor head assembly is not enclosed in concrete.
2. Anchorage enclosure shall have provisions to allow injecting grout at low end and venting at high end. Galvanize after fabrication.
3. Silicone sealant to cover full width of flange.
4. Steel tube (Min thickness = 1/4") welded to bearing plate. Galvanize assembly after fabrication
5. Steel tube welded to bearing plate. Inside diameter of steel tube (Min thickness = 1/4") to be 1" greater than outside diameter of smooth sheathing.
6. Galvanize assembly after fabrication.
7. For other wall details, see PROJECT PLANS.

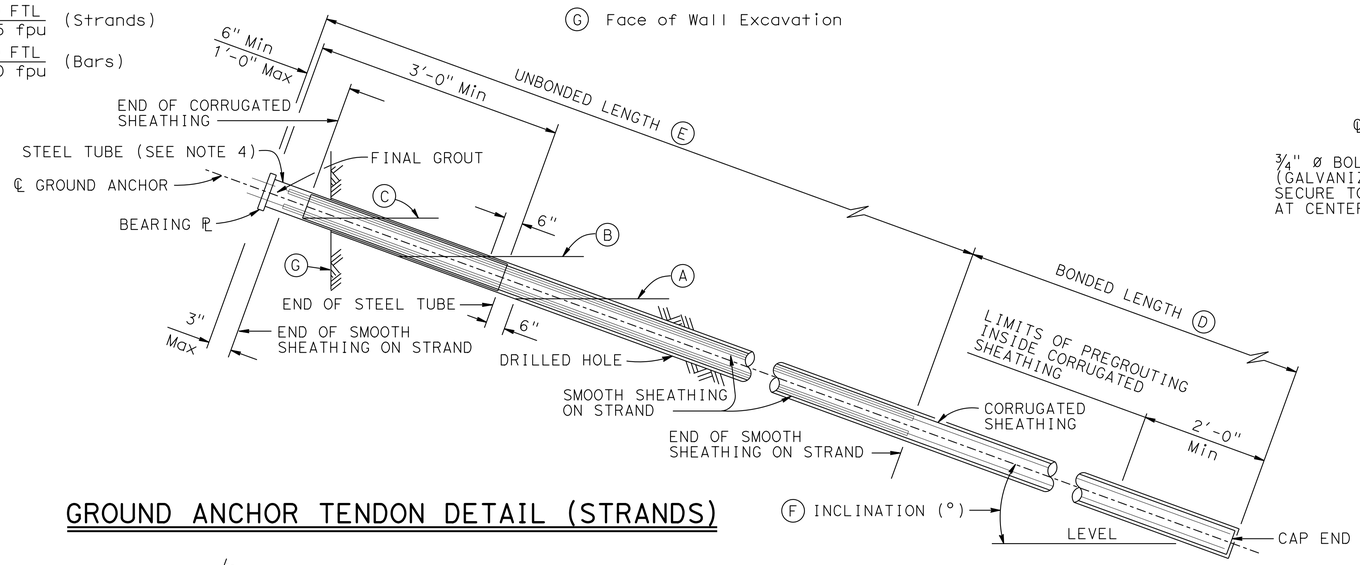

GROUND ANCHOR TENDON DETAIL (STRANDS)

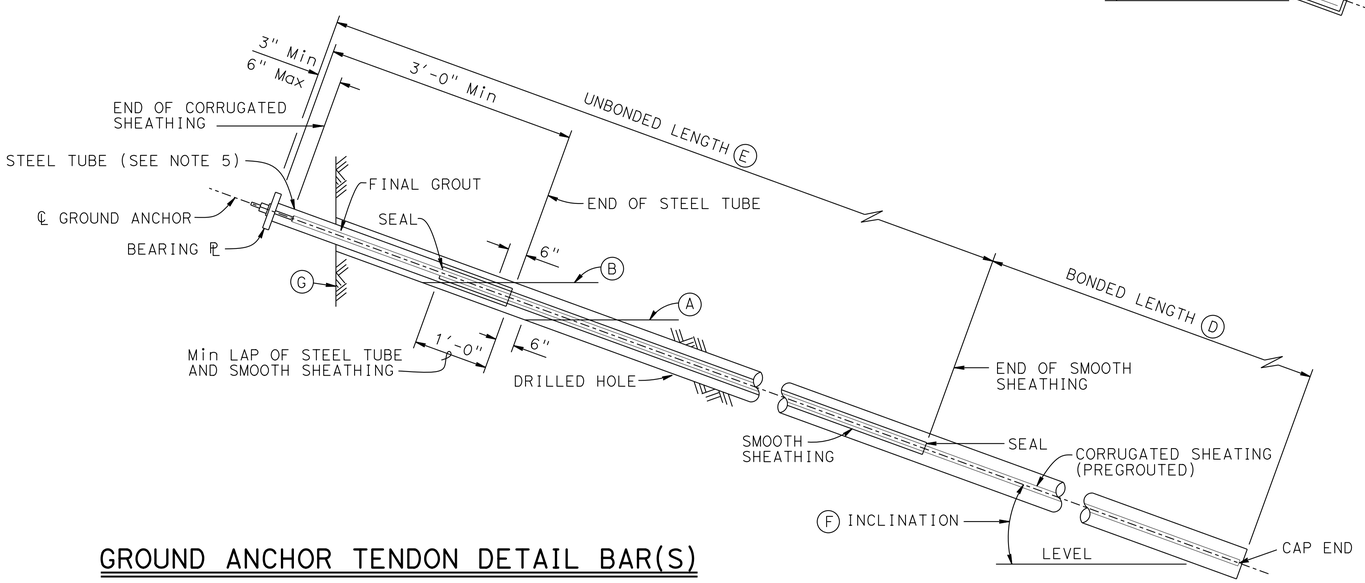

GROUND ANCHOR TENDON DETAIL BAR(S)

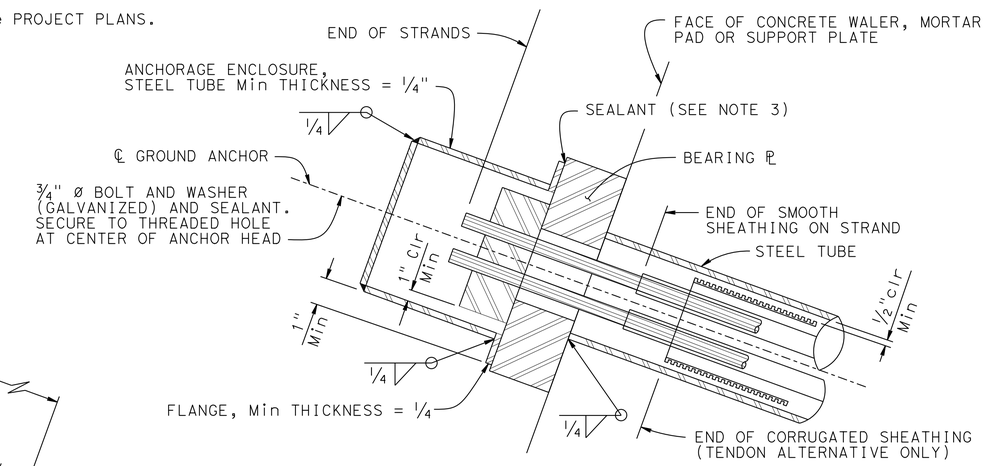

ALTERNATIVE X

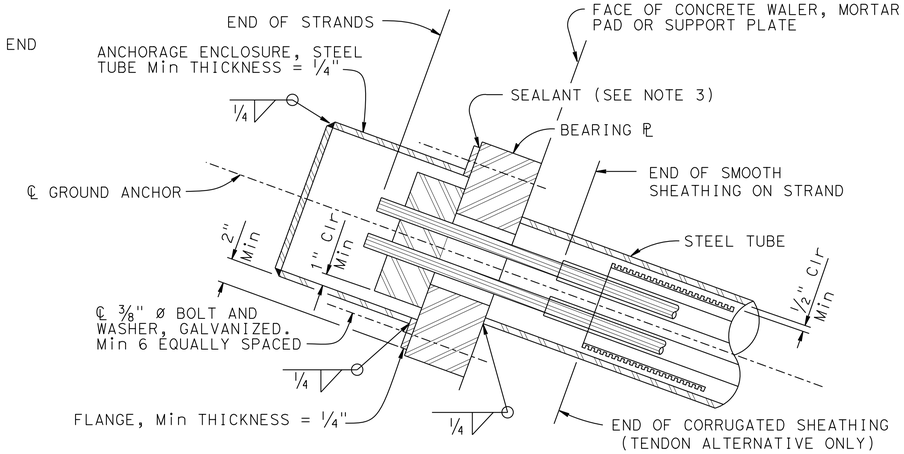

ALTERNATIVE Y

ANCHORAGE ENCLOSURE DETAILS

NO SCALE

SPECIAL DETAILS

REVISED STANDARD DRAWING

FILE NO. xs12-040

APPROVAL DATE January 2012

(1) REVISED NOTE

STATE OF CALIFORNIA DEPARTMENT OF TRANSPORTATION

DIVISION OF ENGINEERING SERVICES

BRIDGE NO. 55E0132

POST MILE 5.80

RETAINING WALL NO. 315L

SUB HORIZONTAL GROUND ANCHOR DETAILS

DS OSD 2147A (ENGLISH STANDARD DRAWING "XS" BORDER REV. (02-02-11)

ORIGINAL SCALE IN INCHES FOR REDUCED PLANS 0 1 2 3

UNIT:
PROJECT NUMBER & PHASE: 1200020278

CONTRACT NO.: 12-0F96C1

DISREGARD PRINTS BEARING EARLIER REVISION DATES

REVISION DATES 04-27-12 09-24-12 01-14-13 04-22-13

SHEET 12 OF 14

FILE => 55E0132-y-twdt.dgn

USERNAME => s124496 DATE PLOTTED => 29-AUG-2013 TIME PLOTTED => 10:04

DIST	COUNTY	ROUTE	POST MILES TOTAL PROJECT	SHEET No	TOTAL SHEETS
12	Ora	5	3.7/6.2	765	780

REGISTERED ENGINEER — DATE 4/22/13

8-26-13
PLANS APPROVAL DATE

The State of California or its officers or agents shall not be responsible for the accuracy or completeness of electronic copies of this plan sheet.

REGISTERED PROFESSIONAL ENGINEER — A. KORKOS — NO. GE 2357 — EXP. 3-31-14 — GEOTECHNICAL — STATE OF CALIFORNIA

ORANGE COUNTY TRANSPORTATION AUTHORITY
550 SOUTH MAIN STREET
ORANGE, CA 92863-1584

EARTH MECHANICS, INC.
17800 NEWHOPE STREET, SUITE B
FOUNTAIN VALLEY, CA 92708

BENCH MARK

DESIGNATION: 3SS-2-82 ELEV 95.558′

DESCRIBED BY OCS 2003 - FOUND 3¾" OCS ALUMINUM BENCH MARK DISK STAMPED "3SS-2-82", SET IN THE SOUTHEASTERLY CORNER OF A 4 FT. BY 4.5 FT. CONCRETE CATCH BASIN. MONUMENT IS LOCATED ALONG THE NORTHWESTERLY SIDE OF AVENIDA VAQUERO, 100 FT. NORTHERLY OF THE NORTHERLY EDGE OF THE SAN DIEGO FREEWAY OVERCROSSING OF AVENIDA VAQUERO, 23 FT. WESTERLY OF THE CENTERLINE OF VAQUERO AND 29.2 FT. SOUTHERLY OF A STREET STANDARD NO NUMBER. MONUMENT IS SET LEVEL WITH THE TOP OF THE CURB.

NOTES:

(1) This LOTB sheet was prepared in accordance with the Caltrans Soil and Rock Logging, Classification and Presentation Manual (June 2010).

(2) 2.4" samples were taken using a California Modified Sampler.

(3) An automatic trip hammer system consisting of a hammer weight of 140 lbs falling a distance of 30" was used to advance the drive sampler.

(4) Conversion factor from 2.4" Modified California Ring Sampler blowcounts to Standard Penetration Test (SPT) blowcounts is 0.5.

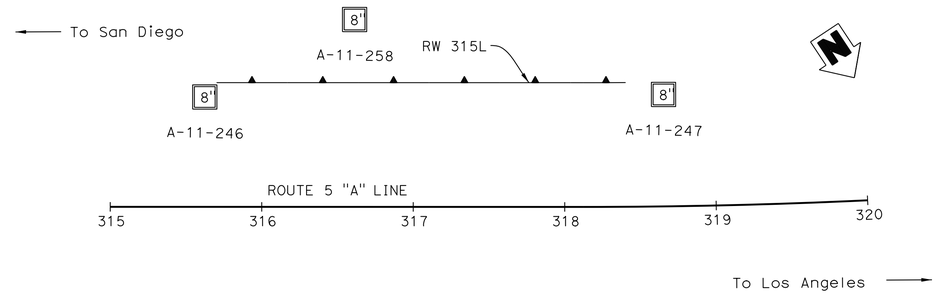

PLAN

1" = 50′

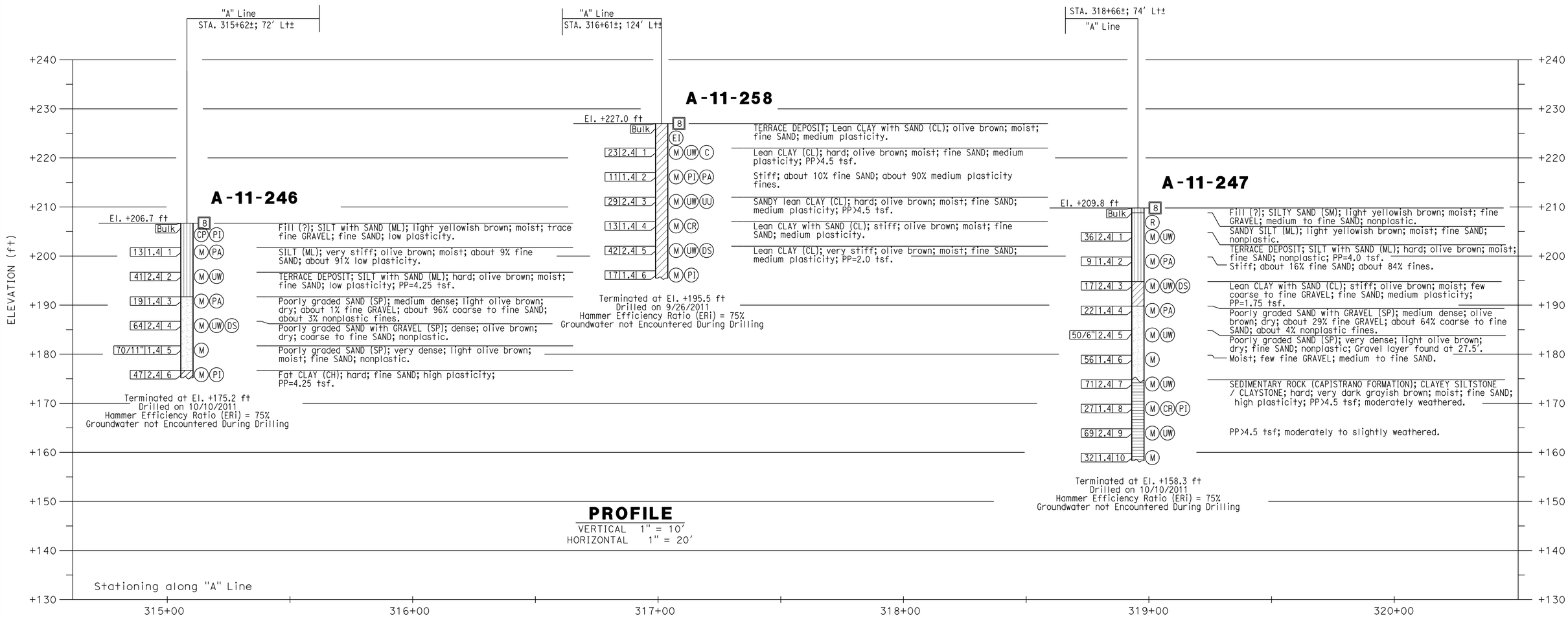

PROFILE

VERTICAL 1" = 10′
HORIZONTAL 1" = 20′

Luqi Yang — DESIGN OVERSIGHT: Luqi Yang — 5-15-13 — SIGN OFF DATE	DRAWN BY: J. FANG	R. JIE — FIELD INVESTIGATION BY:	PREPARED FOR THE STATE OF CALIFORNIA DEPARTMENT OF TRANSPORTATION	A. KORKOS — PROJECT ENGINEER	BRIDGE NO. 55E0132	RETAINING WALL NO. 315L
	CHECKED BY: G. J. GUNARANJAN	DATE: 9/2011, 10/2011			POST MILES 5.80	LOG OF TEST BORINGS NO. 1 OF 2

GS GEOTECHNICAL LOG OF TEST BORINGS SHEET (ENGLISH) (REV. 7/16/10)

ORIGINAL SCALE IN INCHES FOR REDUCED PLANS 0 1 2 3

UNIT:
PROJECT NUMBER & PHASE: 1200020278

DISREGARD PRINTS BEARING EARLIER REVISION DATES — REVISION DATES: 04-27-12 09-24-12 01-14-13 04-22-13

SHEET 13 OF 14

FILE => 55E0132-z-lotb1.dgn

CONTRACT NO.: 12-0F96C1 PROJECT ID: 1200020278

USERNAME => s124496 DATE PLOTTED => 29-AUG-2013 TIME PLOTTED => 10:04

FED. REGION NO.	STATE	F.A. PROJECT NO.	SHEET NO.	TOTAL SHEETS
7	CALIF.			

DIST.	COUNTY	ROUTE	SECTION	POST MILE	TOTAL SHEETS
07	ORA	5	04/61	33.8	538
	SD	5	87/102	22.2	

Robert W. Reynolds #465
DIST. ENGINEERING SERVICES ENGINEER — PRELIMINARY
DATE APPROVED March 12, 1979

BENCH MARK

BM # 318-2A-60 Elev. 206.92
Std. Brass Cap Monument 4' Rt ℄ Fwy Sta. 318+10.92 BC

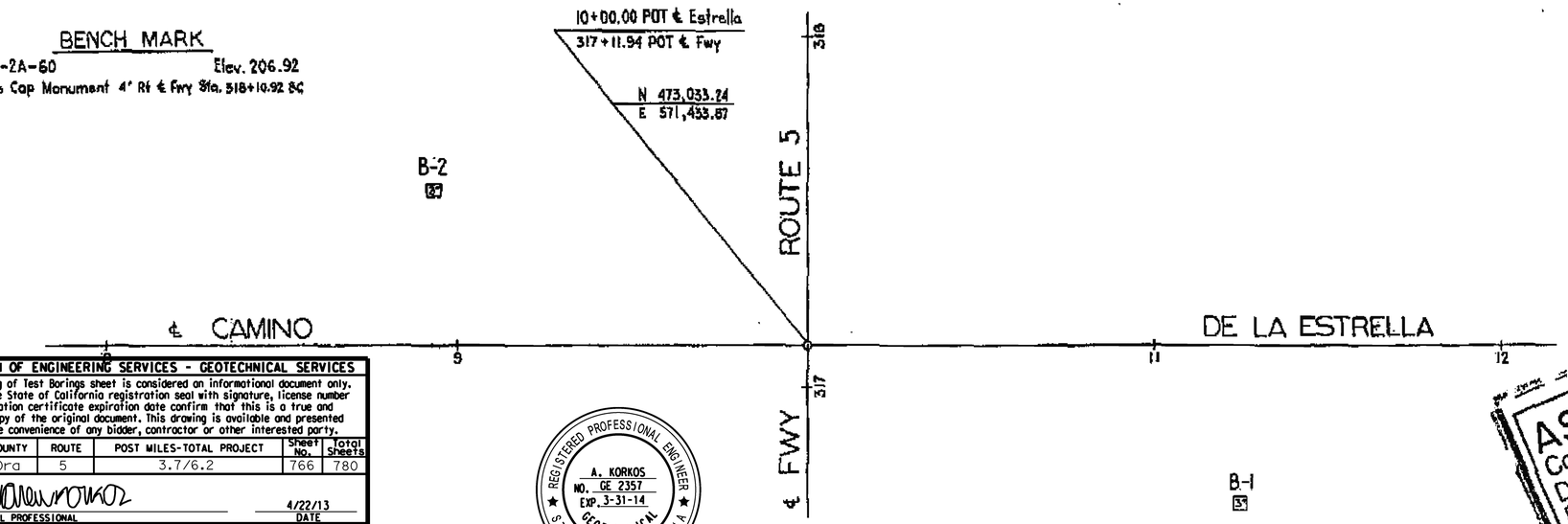

AS BUILT PLANS
Contract No. 07-105274
Date Completed
Document No.

PLAN
Scale 1" = 20'

DIVISION OF ENGINEERING SERVICES - GEOTECHNICAL SERVICES					
As-Built Log of Test Borings sheet is considered an informational document only. As such, the State of California registration seal with signature, license number and registration certificate expiration date confirm that this is a true and accurate copy of the original document. This drawing is available and presented only for the convenience of any bidder, contractor or other interested party.					
DIST.	COUNTY	ROUTE	POST MILES-TOTAL PROJECT	Sheet No.	Total Sheets
12	Ora	5	3.7/6.2	766	780
GEOTECHNICAL PROFESSIONAL				4/22/13 DATE	
RETAINING WALL NO. 315L					
LOG OF TEST BORINGS NO. 2 OF 2					
NOTE: A COPY OF THIS LOG OF TEST BORINGS IS AVAILABLE AT OFFICE OF STRUCTURE MAINTENANCE AND INVESTIGATIONS, SACRAMENTO, CALIFORNIA			UNIT: PROJECT NUMBER & PHASE: 1200020278		

BRIDGE No.	Sheet	of
55E0132	14	14

REGISTERED PROFESSIONAL ENGINEER
A. KORKOS
NO. GE 2357
EXP. 3-31-14
GEOTECHNICAL
STATE OF CALIFORNIA

To Accompany Plans Dated 8-26-13

Revisions made to this Log of Test Borings from the original ____ Log of Test Borings are the addition of the following table and notes:

Boring	Station	Offset from C/L Rte. 101

NO GROUND WATER ENCOUNTERED DURING THIS INVESTIGATION BY BRIDGE DEPT. GEOLOGY SECTION
DATE OCTOBER, 1986

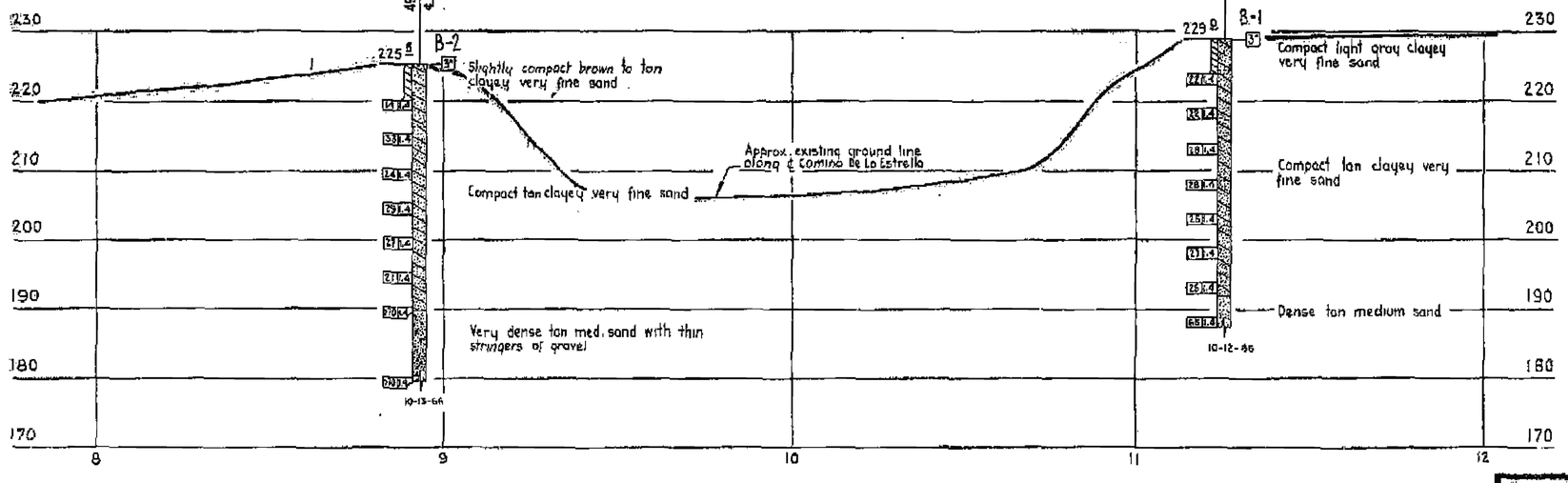

NO AS BUILT CORRECTION
AS BUILT
CORRECTIONS BY W. Labse
CONTRACT NO. 07-105274
DATE 4-1-83 and 10-18-83

PROFILE
Scale: Vert. 1" = 10
Horiz. 1" = 20

Sht 12 of 12

LEGEND OF BORING OPERATIONS

PENETROMETER
2½" CONE PENETROMETER
SAMPLING BORING (DRY)
ROTARY BORING (WET)
AUGER BORING (DRY)
JET BORING
CORE BARREL
TEST PIT

LEGEND OF EARTH MATERIALS

GRAVEL
SAND
SILT
CLAY
SANDY CLAY OR CLAYEY SAND
SANDY SILT OR SILTY SAND
SILTY CLAY OR CLAYEY SILT
FINE MATERIAL ORGANIC MATTER
FILL MATERIAL
IGNEOUS ROCK
SEDIMENTARY ROCK
METAMORPHIC ROCK

CLASSIFICATION OF MATERIAL BASED ON STANDARD GRADE SIZE LIMITS

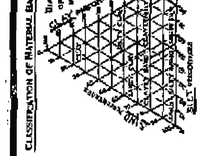

NOTE: Classification of earth material as shown on this sheet is based upon field inspection and is not to be construed to imply mechanical analysis.

FIELD STUDY	R. G. MUNIZ 10-17-86
DRAWN	R. V. SESTORAS 11-18-86
CHECKED	R. G. MUNIZ 11-22-86

Registered Geologist

BRIDGE DEPARTMENT
ENGINEERING GEOLOGY SECTION

538

STATE OF CALIFORNIA
DEPARTMENT OF TRANSPORTATION

CAMINO DE ESTRELLA OVERCROSSING REPLACE

LOG OF TEST BORINGS

SCALE As Noted	BRIDGE 55-224	FILE	DRAWING 55-224-11

Charge 07209
W.A. 105274

Disregard plotted bearing scribler numbers

PREL. DRAWING No. PR-

DIST	COUNTY	ROUTE	POST MILES TOTAL PROJECT	SHEET No	TOTAL SHEETS
12	Ora	5	3.7/6.2	767	780

REGISTERED CIVIL ENGINEER 4/22/13 DATE

8-26-13
PLANS APPROVAL DATE

REGISTERED PROFESSIONAL ENGINEER MOHAN S. CHAR No. 57894 Exp. 6/30/14 CIVIL STATE OF CALIFORNIA

The State of California or its officers or agents shall not be responsible for the accuracy or completeness of electronic copies of this plan sheet.

ORANGE COUNTY TRANSPORTATION AUTHORITY
550 SOUTH MAIN STREET
ORANGE, CA 92863-1584

AECOM TECHNICAL SERVICES INC.
999 W. TOWN & COUNTRY ROAD
ORANGE, CALIFORNIA 92868

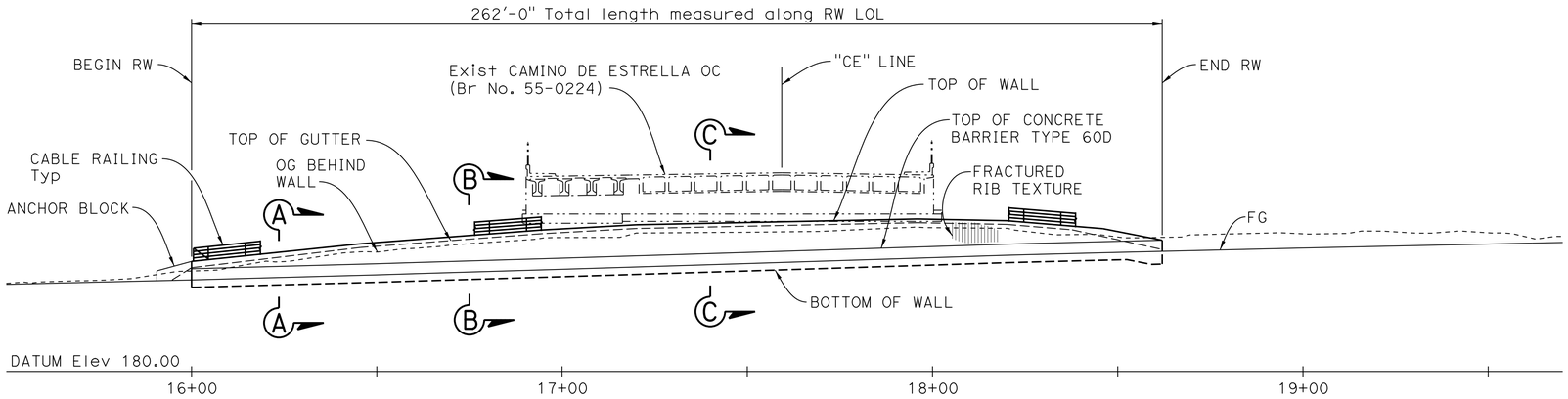

DEVELOPED MIRROR ELEVATION

1" = 20'

CURVE DATA				
No.	R	Δ	L	T
1	4000.00'	9°34'01"	667.89'	334.73'
2	4071.00'	2°41'34"	191.34'	95.69'

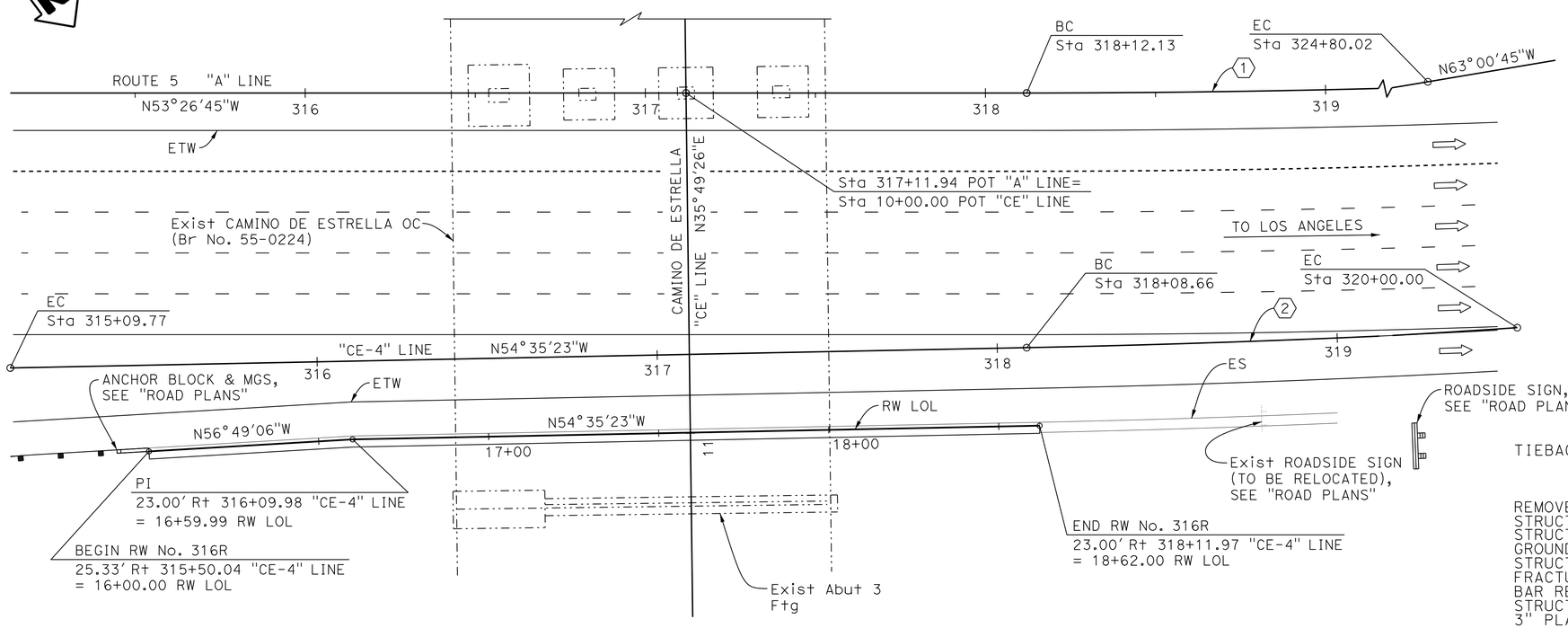

PLAN

1" = 20'

NOTES:

1. For "SECTION A-A", "SECTION B-B", and "SECTION C-C", see "GENERAL PLAN NO. 2" sheet.
2. For "GENERAL NOTES" and "INDEX TO PLANS", see "GENERAL NOTES & INDEX TO PLANS" sheet.

LEGEND:

——— Denotes new construction

·—·—· Denotes existing structure

TIEBACK WALL NO 316R BRIDGE NO 55E0133

QUANTITIES

REMOVE SLOPE PAVING (SQFT)	720	SQFT
STRUCTURE EXCAVATION (GROUND ANCHOR WALL)	274	CY
STRUCTURE BACKFILL (GROUND ANCHOR WALL)	22	CY
GROUND ANCHOR (SUBHORIZONTAL)	83	EA
STRUCTURAL CONCRETE, RETAINING WALL	116	CY
FRACTURED RIB TEXTURE	1,635	SQFT
BAR REINFORCING STEEL (RETAINING WALL)	55,000	LB
STRUCTURAL SHOTCRETE	129	CY
3" PLASTIC PIPE UNDERDRAIN	210	LF
GEOCOMPOSITE DRAIN	470	SQFT
SLOPE PAVING (RANDOM SLATE PATTERN)	63	CY
MINOR CONCRETE (GUTTER) (LF)	263	LF
CABLE RAILING	263	LF

NOTE:
THE CONTRACTOR SHALL VERIFY ALL CONTROLLING FIELD DIMENSIONS BEFORE ORDERING OR FABRICATING ANY MATERIAL.

Luqi Yang
DESIGN OVERSIGHT Luqi Yang
5-15-13
SIGN OFF DATE

	BY	CHECKED
DESIGN	M. Wise	D. Kim
DETAILS	J. Quinoveva	D. Kim
QUANTITIES	M. Wise	D. Kim

LOAD & RESISTANCE FACTOR DESIGN — LIVE LOADING: HL93 W/"LOW-BOY"; PERMIT DESIGN VEHICLE

	BY	CHECKED
LAYOUT	J. Quinoveva	C. Weber
SPECIFICATIONS	M. Char	PLANS AND SPECS COMPARED M. Char

PREPARED FOR THE STATE OF CALIFORNIA DEPARTMENT OF TRANSPORTATION

Mohan S. Char
PROJECT ENGINEER

BRIDGE NO. 55E0133
POST MILES 5.80

RETAINING WALL NO. 316R
GENERAL PLAN NO. 1

DESIGN GENERAL PLAN SHEET (ENGLISH) (REV.7/16/10)

ORIGINAL SCALE IN INCHES FOR REDUCED PLANS 0 1 2 3

UNIT:
PROJECT NUMBER & PHASE: 1200020278 CONTRACT NO.: 12-0F96C1

DISREGARD PRINTS BEARING EARLIER REVISION DATES

REVISION DATES: 04-27-12 09-24-12 01-14-13 04-22-13

SHEET 1 OF 14

FILE => 55E0133-a-gp01.dgn

USERNAME => s124496 DATE PLOTTED => 29-AUG-2013 TIME PLOTTED => 10:04

DIST	COUNTY	ROUTE	POST MILES TOTAL PROJECT	SHEET No	TOTAL SHEETS
12	Ora	5	3.7/6.2	768	780

REGISTERED CIVIL ENGINEER — DATE 4/22/13

8-26-13
PLANS APPROVAL DATE

REGISTERED PROFESSIONAL ENGINEER — MOHAN S. CHAR — No. 57894 — Exp. 6/30/14 — CIVIL — STATE OF CALIFORNIA

The State of California or its officers or agents shall not be responsible for the accuracy or completeness of electronic copies of this plan sheet.

ORANGE COUNTY TRANSPORTATION AUTHORITY
550 SOUTH MAIN STREET
ORANGE, CA 92863-1584

AECOM TECHNICAL SERVICES INC.
999 W. TOWN & COUNTRY ROAD
ORANGE, CALIFORNIA 92868

NOTES:

1. For limits of Slope Paving, see "SLOPE PAVING DETAILS" sheet.
2. For "FRACTURED RIB TEXTURE", see "GENERAL NOTES & INDEX TO PLANS" sheet.

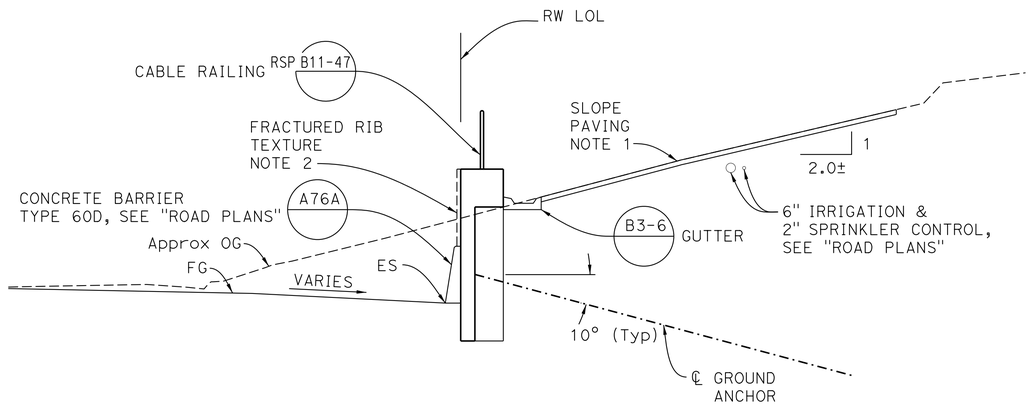

SECTION A-A
1/4" = 1'-0"

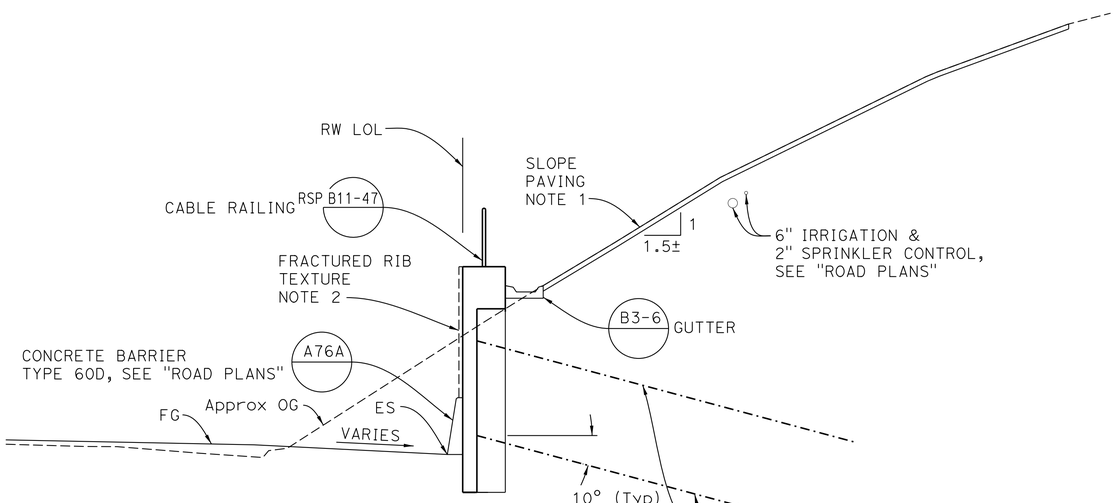

SECTION B-B
1/4" = 1'-0"

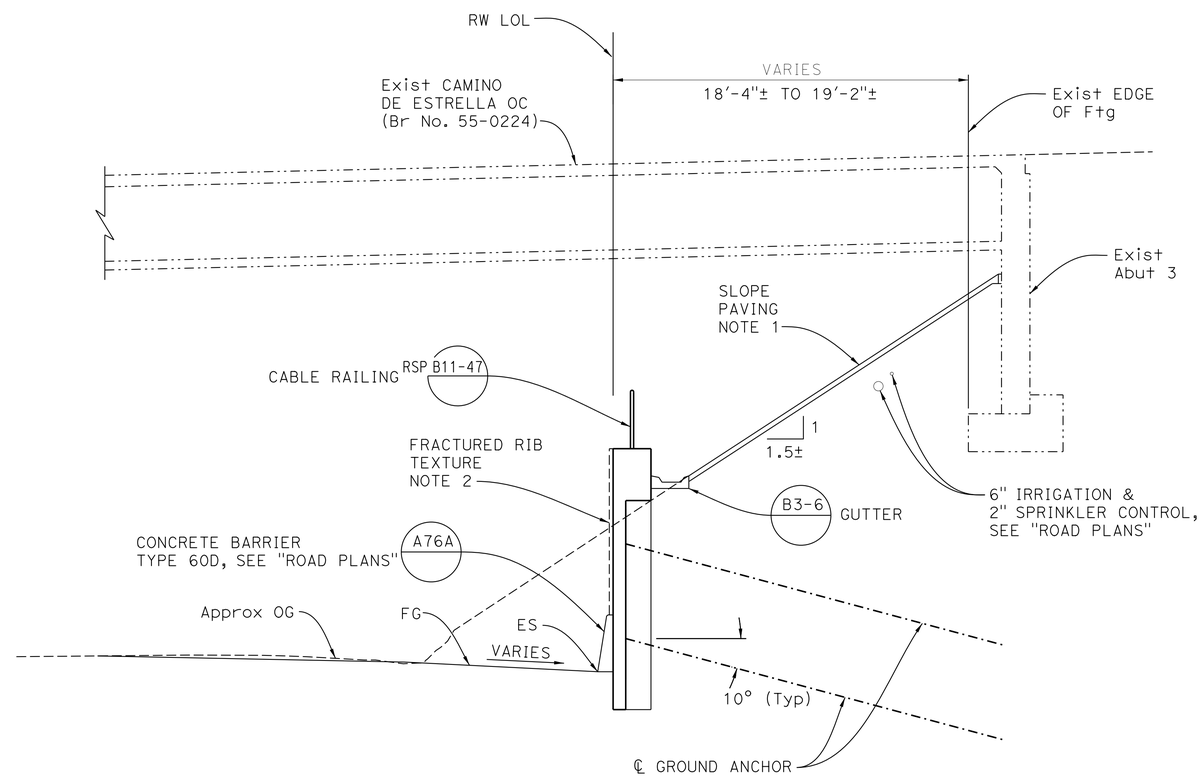

SECTION C-C
1/4" = 1'-0"

NOTE:
THE CONTRACTOR SHALL VERIFY ALL CONTROLLING FIELD DIMENSIONS BEFORE ORDERING OR FABRICATING ANY MATERIAL.

Luqi Yang
DESIGN OVERSIGHT — Luqi Yang
5-15-13
SIGN OFF DATE

	BY	CHECKED
DESIGN	M. Wise	D. Kim
DETAILS	H. Withers	D. Kim
QUANTITIES	M. Wise	D. Kim

LOAD & RESISTANCE FACTOR DESIGN — LIVE LOADING: HL93 W/"LOW-BOY"; PERMIT DESIGN VEHICLE

	BY	CHECKED
LAYOUT	J. Quinoveva	C. Weber
SPECIFICATIONS	M. Char	PLANS AND SPECS COMPARED M. Char

PREPARED FOR THE STATE OF CALIFORNIA DEPARTMENT OF TRANSPORTATION

Mohan S. Char
PROJECT ENGINEER

BRIDGE NO. 55E0133
POST MILES 5.80

RETAINING WALL NO. 316R
GENERAL PLAN NO. 2

DESIGN GENERAL PLAN SHEET (ENGLISH) (REV.7/16/10)

ORIGINAL SCALE IN INCHES FOR REDUCED PLANS 0 1 2 3

UNIT:
PROJECT NUMBER & PHASE: 1200020278
CONTRACT NO.: 12-0F96C1

DISREGARD PRINTS BEARING EARLIER REVISION DATES

REVISION DATES: 04-27-12 09-24-12 01-14-13 04-22-13

SHEET 2 OF 14

FILE => 55E0133-a-gp02.dgn

USERNAME => s124496 DATE PLOTTED => 29-AUG-2013 TIME PLOTTED => 10:04

DIST	COUNTY	ROUTE	POST MILES TOTAL PROJECT	SHEET No	TOTAL SHEETS
12	Ora	5	3.7/6.2	769	780

REGISTERED CIVIL ENGINEER — DATE 4/22/13

8-26-13
PLANS APPROVAL DATE

REGISTERED PROFESSIONAL ENGINEER — MOHAN S. CHAR No. 57894 Exp. 6/30/14 CIVIL — STATE OF CALIFORNIA

The State of California or its officers or agents shall not be responsible for the accuracy or completeness of electronic copies of this plan sheet.

ORANGE COUNTY TRANSPORTATION AUTHORITY
550 SOUTH MAIN STREET
ORANGE, CA 92863-1584

AECOM TECHNICAL SERVICES INC.
999 W. TOWN & COUNTRY ROAD
ORANGE, CALIFORNIA 92868

GENERAL NOTES

LOAD AND RESISTANCE FACTOR DESIGN

Design:
AASHTO LRFD Bridge Design Specifications, 4th Edition and the California Amendments, preface dated November 2011.

Soil Parameters:
For earth retaining structures design only

Friction angle (ø) = 27°
Cohesion (c) = 210 psf
Unit Weight (γ) = 120 pcf
Allowable bearing pressure = 2.0 ksf

Structural Shotcrete:
f'c = 5.0 ksi @ 28 days
f'ci = 4.25 ksi @ time of stressing
fy = 60 ksi

Reinforced Concrete:
f'c = 4.0 ksi @ 28 days
fy = 60 ksi

Prestressing Steel:
FDL = Factored Design Load per anchor (kips) (see values shown on "STRUCTURE PLAN NO. 2" sheet)

FTL = Factored Test Load per anchor (kips) (see values shown on "STRUCTURE PLAN NO. 2" sheet)

LL = Lock-Off Load per anchor (kips) (see values shown on "STRUCTURE PLAN NO. 2" sheet)

For additional information, see "SUB HORIZONTAL GROUND ANCHOR DETAILS" sheet.

Structural Steel:
Bearing Plate - ASTM Designation: A572
Fy = 50 ksi

ABBREVIATIONS

HSSD HIGH SIDE OF SUPERELEVATION DITCH

STANDARD PLANS 2010 EDITION

	A10A	ABBREVIATIONS (SHEET 1 OF 2)
	A10B	ABBREVIATIONS (SHEET 2 OF 2)
	A10C	LINES AND SYMBOLS (SHEET 1 OF 3)
	A10D	LINES AND SYMBOLS (SHEET 2 OF 3)
	A10E	LINES AND SYMBOLS (SHEET 3 OF 3)
	A10F	LEGEND - SOIL (SHEET 1 OF 2)
	A10G	LEGEND - SOIL (SHEET 2 OF 2)
	A10H	LEGEND - ROCK
	A76A	CONCRETE BARRIER TYPE 60
	B0-3	BRIDGE DETAILS
	B3-6	RETAINING WALL DETAILS NO. 2
RSP	B11-47	CABLE RAILING

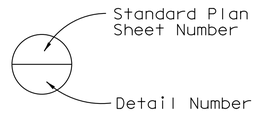

INDEX TO PLANS

No.	Title
1	GENERAL PLAN NO. 1
2	GENERAL PLAN NO. 2
3	GENERAL NOTES & INDEX TO PLANS
4	FOUNDATION PLAN
5	STRUCTURE PLAN NO. 1
6	STRUCTURE PLAN NO. 2
7	RETAINING WALL DETAILS NO. 1
8	RETAINING WALL DETAILS NO. 2
9	DRAINAGE DETAILS
10	SLOPE PAVING DETAILS
11	SLOPE PAVING - FULL SLOPE
12	SUB HORIZONTAL GROUND ANCHOR DETAILS
13	LOG OF TEST BORINGS NO. 1 OF 2
14	LOG OF TEST BORINGS NO. 2 OF 2

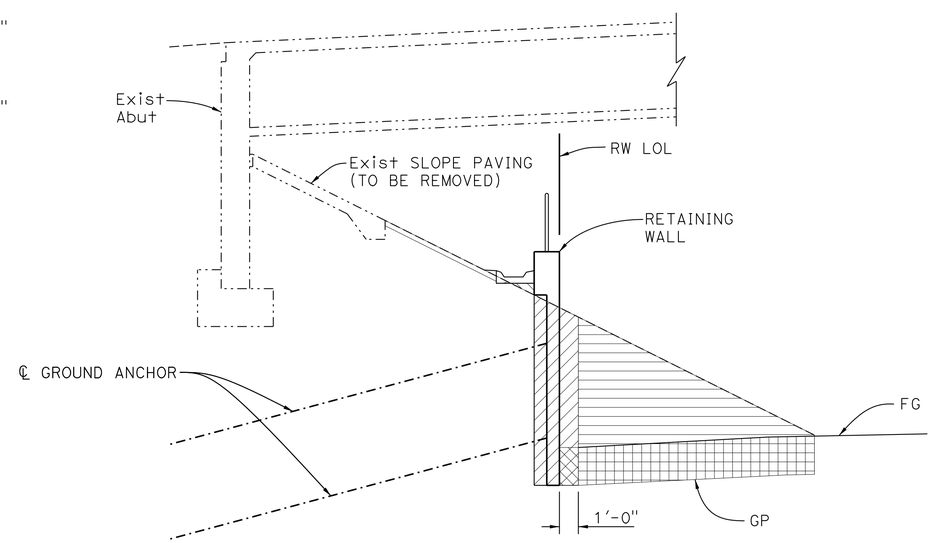

LIMITS OF PAYMENT FOR EXCAVATION AND BACKFILL

No Scale

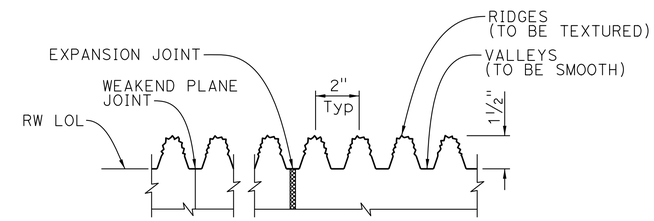

FRACTURED RIB TEXTURE

NO SCALE

Note:
Weakened Plane and Expansion Joints to be centered in valleys

LEGEND:

- Roadway Excavation, see "ROAD PLANS"
- Roadway Backfill and Structural Section, see "ROAD PLANS"
- Structure Excavation (Ground Anchor Wall)
- Structure Backfill (Ground Anchor Wall)
- Denotes existing structure
- Denotes new construction

NOTE:
THE CONTRACTOR SHALL VERIFY ALL CONTROLLING FIELD DIMENSIONS BEFORE ORDERING OR FABRICATING ANY MATERIAL.

DESIGN OVERSIGHT Luqi Yang — 5-15-13 — SIGN OFF DATE

	BY	CHECKED
DESIGN	M. Wise	D. Kim
DETAILS	J. Quinoveva	D. Kim
QUANTITIES	M. Wise	D. Kim

PREPARED FOR THE STATE OF CALIFORNIA DEPARTMENT OF TRANSPORTATION

Mohan S. Char — PROJECT ENGINEER

BRIDGE NO. 55E0133
POST MILES 5.80

RETAINING WALL NO. 316R
GENERAL NOTES & INDEX TO PLANS

DESIGN DETAIL SHEET (ENGLISH) (REV.7/16/10)

ORIGINAL SCALE IN INCHES FOR REDUCED PLANS 0 1 2 3

UNIT:
PROJECT NUMBER & PHASE: 1200020278 CONTRACT NO.: 12-0F96C1

DISREGARD PRINTS BEARING EARLIER REVISION DATES — REVISION DATES 04-27-12 09-24-12 01-14-13 04-22-13 — SHEET 3 OF 14

FILE => 55E0133-a-itp.dgn

USERNAME => s124496 DATE PLOTTED => 29-AUG-2013 TIME PLOTTED => 10:04

DIST	COUNTY	ROUTE	POST MILES TOTAL PROJECT	SHEET No	TOTAL SHEETS
12	Ora	5	3.7/6.2	770	780

REGISTERED CIVIL ENGINEER — DATE 4/22/13

8-26-13
PLANS APPROVAL DATE

REGISTERED PROFESSIONAL ENGINEER — MOHAN S. CHAR — No. 57894 — Exp. 6/30/14 — CIVIL — STATE OF CALIFORNIA

The State of California or its officers or agents shall not be responsible for the accuracy or completeness of electronic copies of this plan sheet.

ORANGE COUNTY TRANSPORTATION AUTHORITY
550 SOUTH MAIN STREET
ORANGE, CA 92863-1584

AECOM TECHNICAL SERVICES INC.
999 W. TOWN & COUNTRY ROAD
ORANGE, CALIFORNIA 92868

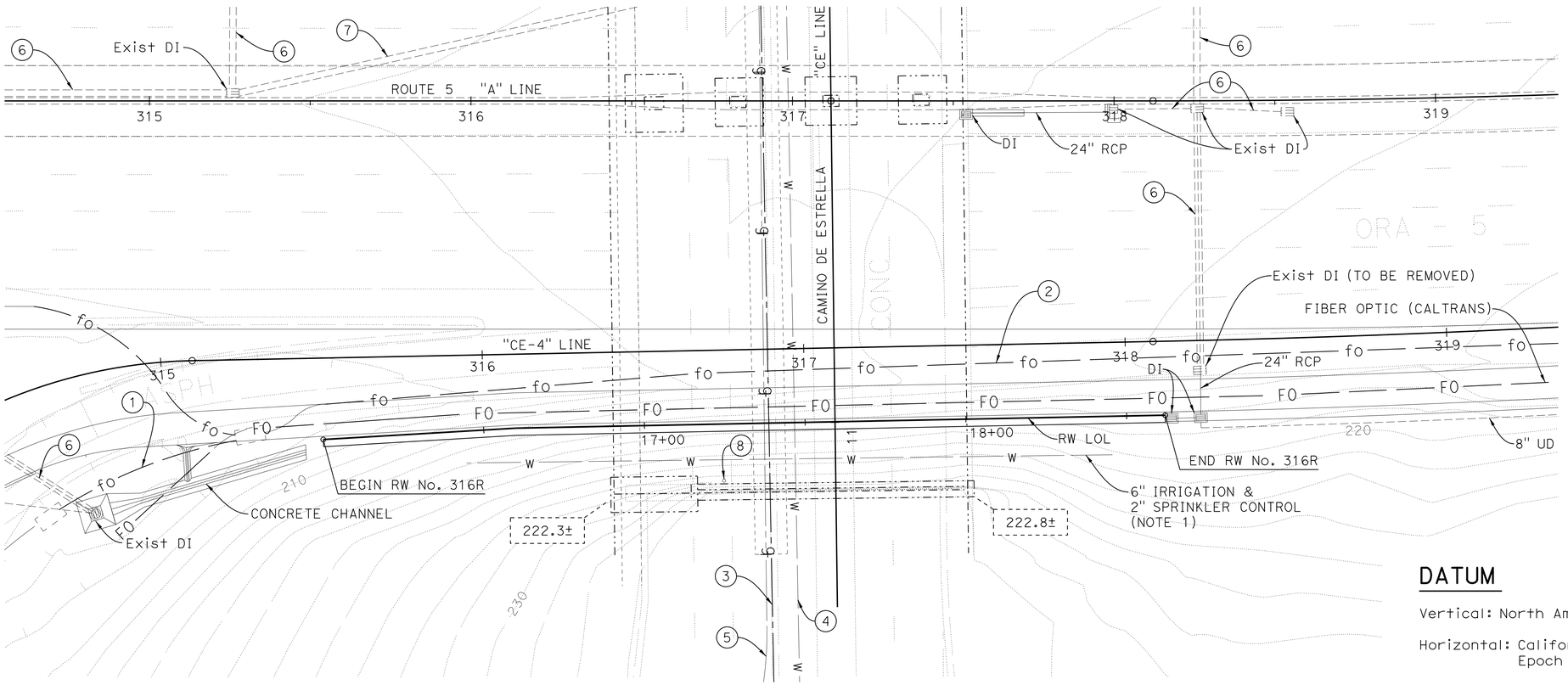

PLAN
1" = 20'

NOTE:

1. Approx location shown. For more information, see "ROAD PLANS".

LEGEND:

- Denotes existing structure
- Denotes new construction
- 222.3± — Denotes bottom of existing footing elevation

EXISTING UTILITIES

1. Fiber Optic (Caltrans)
2. Fiber Optic (Caltrans) (to be relocated)
3. 4" Gas in 8" casing (SCG) (within bridge)
4. 10" ACP Water (SCWD) (within bridge)
5. Telephone (AT&T) (within bridge)
6. 24" RCP
7. 24" RCP (to be abandoned)
8. 4" Gas line vent (Note 1)

DATUM

Vertical: North American Vertical Datum 1988

Horizontal: California Coordinate System 1983
Epoch (1991.35), Zone VI

As-Built elevations adjusted by adding 2.30 feet to match survey data based on the current vertical datum.

BENCH MARK

Designation: 3SS-2-82 Elev 95.558'

Described by OCS 2003 - found 3¾" OCS aluminum bench mark disk Stamped "3SS-2-82", set in the southeasterly corner of a 4 ft. by 4.5 ft. concrete catch basin. Monument is located along the northwesterly side of Avenida Vaquero, 100 ft. northerly of the northerly edge of the San Diego freeway overcrossing of Avenida Vaquero, 23 ft. westerly of the centerline of Vaquero and 29.2 ft. southerly of a street standard no number. Monument is set level with the top of the curb.

GEOTECHNICAL PROFESSIONAL — APPROVAL DATE 1/14/13

NOTE:
THE CONTRACTOR SHALL VERIFY ALL CONTROLLING FIELD DIMENSIONS BEFORE ORDERING OR FABRICATING ANY MATERIAL.

DESIGN OVERSIGHT Luqi Yang — 5-15-13 — SIGN OFF DATE

SCALE:	VERT.DATUM NAVD88	HORZ.DATUM CCS83	
PHOTOGRAMMETRY AS OF: 4-24-09		ALIGNMENT TIES	
SURVEYED	BY PSOMAS	DRAFTED	BY
FIELD CHECKED	BY PSOMAS	CHECKED	BY

	BY	CHECKED
DESIGN	M. Wise	D. Kim
DETAILS	J. Quinoveva	D. Kim
QUANTITIES	M. Wise	D. Kim

PREPARED FOR THE STATE OF CALIFORNIA DEPARTMENT OF TRANSPORTATION

Mohan S. Char
PROJECT ENGINEER

BRIDGE NO. 55E0133
POST MILES 5.80

RETAINING WALL NO. 316R
FOUNDATION PLAN

FOUNDATION PLAN SHEET (ENGLISH) (REV.7/16/10)

ORIGINAL SCALE IN INCHES FOR REDUCED PLANS 0 1 2 3

UNIT:
PROJECT NUMBER & PHASE: 1200020278 CONTRACT NO.: 12-0F96C1

DISREGARD PRINTS BEARING EARLIER REVISION DATES → 04-27-12 09-24-12 01-14-13 04-22-13

SHEET 4 OF 14

FILE => 55E0133-e-fpl.dgn

USERNAME => s124496 DATE PLOTTED => 29-AUG-2013 TIME PLOTTED => 10:04

DIST	COUNTY	ROUTE	POST MILES TOTAL PROJECT	SHEET No	TOTAL SHEETS
12	Ora	5	3.7/6.2	771	780

REGISTERED CIVIL ENGINEER — DATE 4/22/13

8-26-13
PLANS APPROVAL DATE

REGISTERED PROFESSIONAL ENGINEER — MOHAN S. CHAR — No. 57894 — Exp. 6/30/14 — CIVIL — STATE OF CALIFORNIA

The State of California or its officers or agents shall not be responsible for the accuracy or completeness of electronic copies of this plan sheet.

ORANGE COUNTY TRANSPORTATION AUTHORITY
550 SOUTH MAIN STREET
ORANGE, CA 92863-1584

AECOM TECHNICAL SERVICES INC.
999 W. TOWN & COUNTRY ROAD
ORANGE, CALIFORNIA 92868

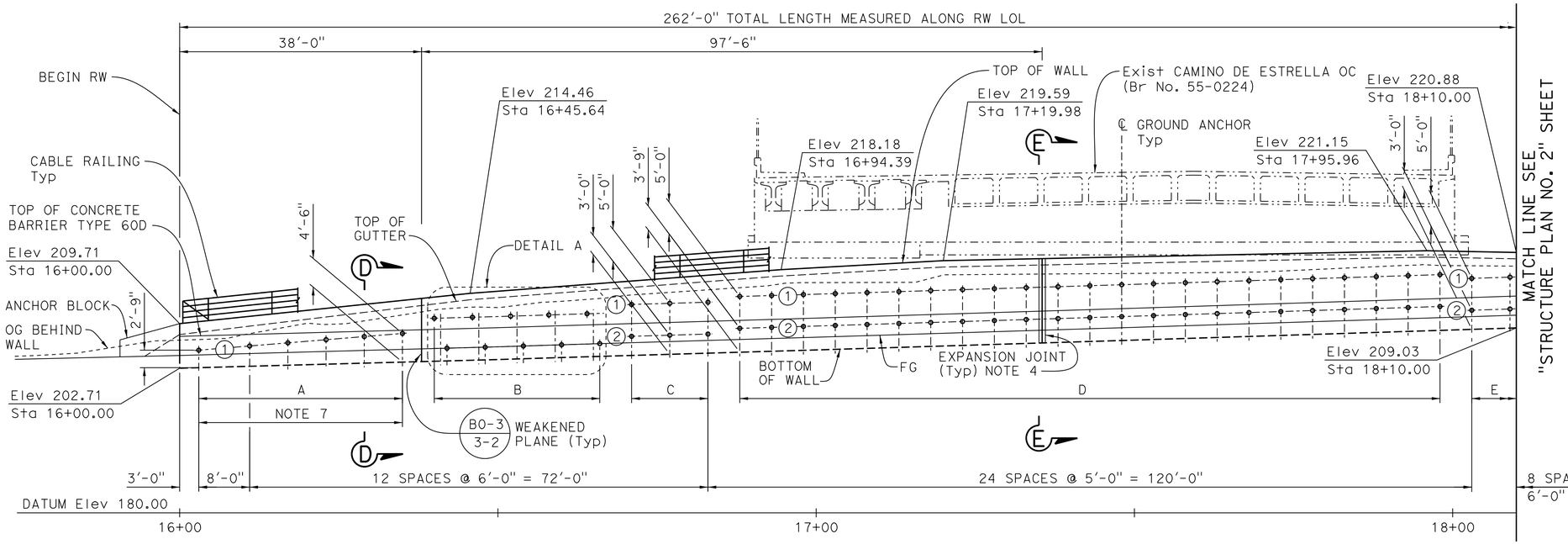

DEVELOPED MIRROR ELEVATION

1" = 10'

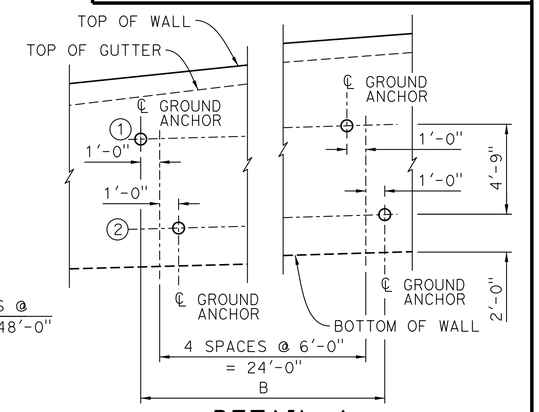

DETAIL A

¼" = 1'-0"

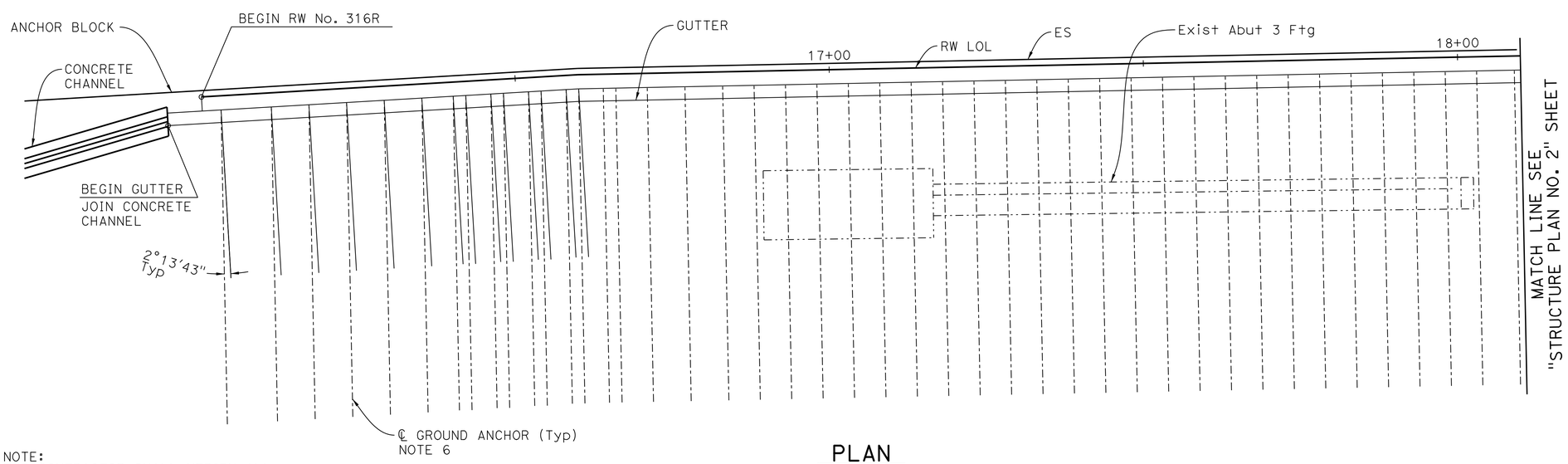

PLAN

1" = 10'

NOTE:
THE CONTRACTOR SHALL VERIFY ALL CONTROLLING FIELD DIMENSIONS BEFORE ORDERING OR FABRICATING ANY MATERIAL.

NOTES:

1. Horizontal dimensions are measured along RW LOL.
2. For wall drainage, see "DRAINAGE DETAILS" sheet.
3. For ground anchor tendon forces, minimum ground anchor unbonded length and ground anchor inclination, see "STRUCTURE PLAN NO. 2" sheet.
4. Expansion joints are in the CIP concrete only. For "EXPANSION JOINT DETAIL", see "RETAINING WALL DETAILS NO. 2" sheet.
5. For "SECTION D-D" and "SECTION E-E", see "RETAINING WALL DETAILS NO. 1" sheet.
6. Ground anchors shall be placed normal to RW LOL unless shown otherwise.
7. Vertical dimension of ground anchor varies linearly between 2'-9" and 4'-6" in this region.

LEGEND:

—··—·· Denotes existing structure

∘ Ground Anchor Location

(1) Ground Anchor Row No.

A Location ID

DESIGN OVERSIGHT Luqi Yang — 5-15-13 SIGN OFF DATE

	BY	CHECKED
DESIGN	M. Wise	D. Kim
DETAILS	J. Quinoveva	D. Kim
QUANTITIES	M. Wise	D. Kim

PREPARED FOR THE STATE OF CALIFORNIA DEPARTMENT OF TRANSPORTATION

Mohan S. Char — PROJECT ENGINEER

BRIDGE NO. 55E0133
POST MILES 5.80

RETAINING WALL NO. 316R
STRUCTURE PLAN NO. 1

DESIGN DETAIL SHEET (ENGLISH) (REV.7/16/10)

ORIGINAL SCALE IN INCHES FOR REDUCED PLANS 0 1 2 3

UNIT:
PROJECT NUMBER & PHASE: 1200020278 CONTRACT NO.: 12-0F96C1

DISREGARD PRINTS BEARING EARLIER REVISION DATES — REVISION DATES 04-27-12 09-24-12 01-14-13 04-22-13 — SHEET 5 OF 14

FILE => 55E0133-g-sp01.dgn

USERNAME => s124496 DATE PLOTTED => 29-AUG-2013 TIME PLOTTED => 10:04

DIST	COUNTY	ROUTE	POST MILES TOTAL PROJECT	SHEET No	TOTAL SHEETS
12	Ora	5	3.7/6.2	772	780

REGISTERED CIVIL ENGINEER — DATE 4/22/13

8-26-13
PLANS APPROVAL DATE

REGISTERED PROFESSIONAL ENGINEER — MOHAN S. CHAR — No. 57894 — Exp. 6/30/14 — CIVIL — STATE OF CALIFORNIA

The State of California or its officers or agents shall not be responsible for the accuracy or completeness of electronic copies of this plan sheet.

ORANGE COUNTY TRANSPORTATION AUTHORITY
550 SOUTH MAIN STREET
ORANGE, CA 92863-1584

AECOM TECHNICAL SERVICES INC.
999 W. TOWN & COUNTRY ROAD
ORANGE, CALIFORNIA 92868

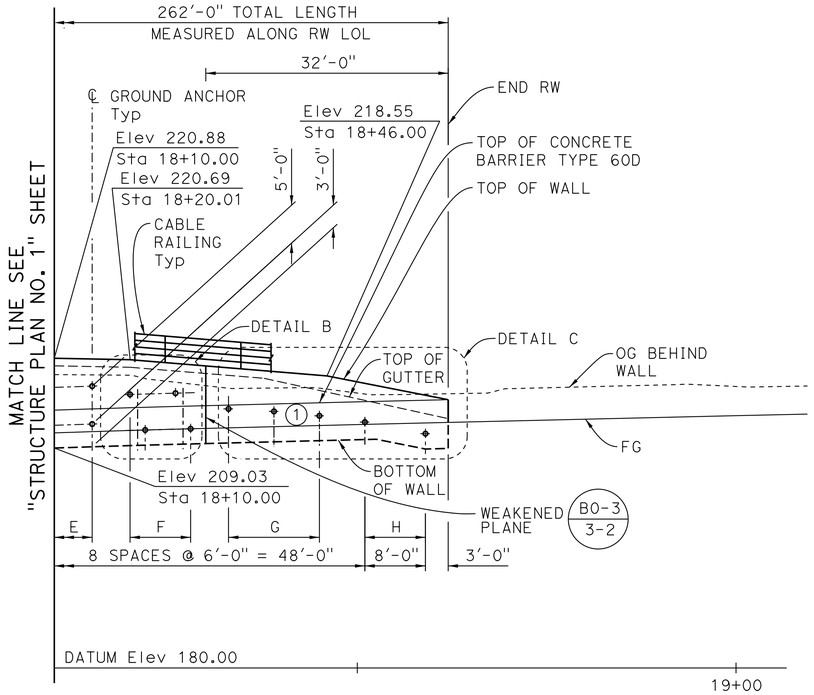

DEVELOPED MIRROR ELEVATION

1" = 10'

FACTORED DESIGN LOAD PER GROUND ANCHOR (KIPS)								
	LOCATION ID							
ROW No.	A	B	C	D	E	F	G	H
1	100	75	115	105	105	75	105	75
2	-	55	100	95	100	55	-	-

FACTORED TEST LOAD PER GROUND ANCHOR (KIPS)								
	LOCATION ID							
ROW No.	A	B	C	D	E	F	G	H
1	125	95	145	130	130	95	130	95
2	-	65	125	120	125	65	-	-

LOCK-OFF LOAD PER GROUND ANCHOR (KIPS)								
	LOCATION ID							
ROW No.	A	B	C	D	E	F	G	H
1	55	45	80	70	70	45	60	45
2	-	35	70	65	70	35	-	-

GROUND ANCHOR UNBONDED LENGTH (MINIMUM) (FT)								
	LOCATION ID							
ROW No.	A	B	C	D	E	F	G	H
1	15	15	25	25	25	15	15	15
2	-	15	25	25	25	15	-	-

NOTE: The contractor must determine the bonded length. The minimum bonded length must be 15'-0".

GROUND ANCHOR INCLINATION, θ (DEGREE)								
	LOCATION ID							
ROW No.	A	B	C	D	E	F	G	H
1	10	10	10	10	10	10	10	10
2	-	10	10	10	10	10	-	-

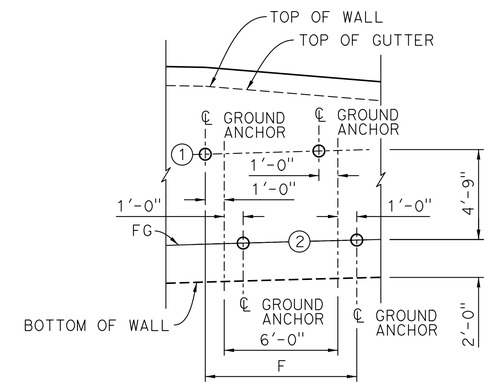

DETAIL B

1/4" = 1'-0"

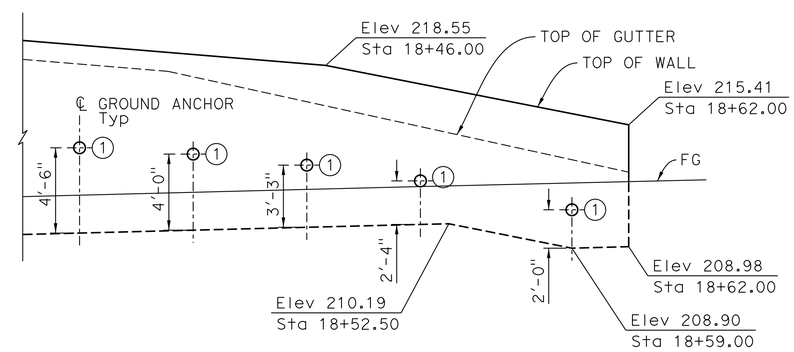

DETAIL C

1/4" = 1'-0"

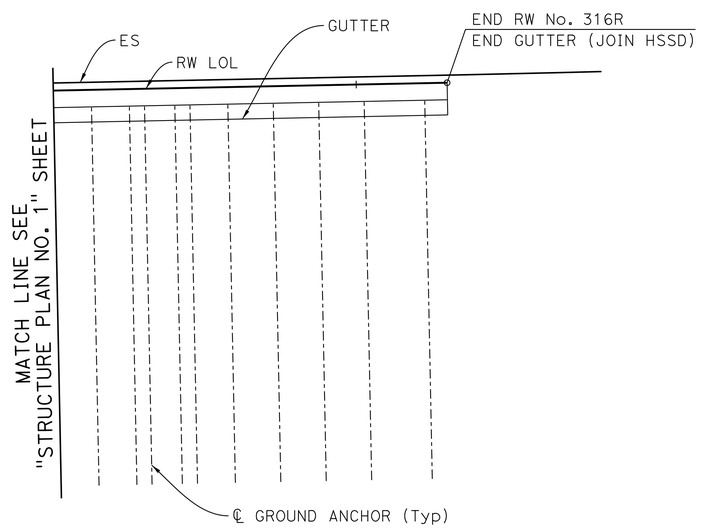

PLAN

1" = 10'

NOTE:
THE CONTRACTOR SHALL VERIFY ALL CONTROLLING FIELD DIMENSIONS BEFORE ORDERING OR FABRICATING ANY MATERIAL.

LEGEND:

- ∘ Ground Anchor Location
- (1) Ground Anchor Row No.
- E Location ID

NOTES:

1. Horizontal dimensions are measured along RW LOL.
2. For wall drainage, see "DRAINAGE DETAILS" sheet.
3. Expansion joints are in the CIP concrete only. For "EXPANSION JOINT DETAIL", see "RETAINING WALL DETAILS NO. 2" sheet.

Luqi Yang
DESIGN OVERSIGHT — Luqi Yang
5-15-13
SIGN OFF DATE

	BY	CHECKED
DESIGN	M. Wise	D. Kim
DETAILS	J. Quinoveva	D. Kim
QUANTITIES	M. Wise	D. Kim

PREPARED FOR THE STATE OF CALIFORNIA DEPARTMENT OF TRANSPORTATION

Mohan S. Char
PROJECT ENGINEER

BRIDGE NO. 55E0133
POST MILES 5.80

RETAINING WALL NO. 316R
STRUCTURE PLAN NO. 2

DESIGN DETAIL SHEET (ENGLISH) (REV.7/16/10)

ORIGINAL SCALE IN INCHES FOR REDUCED PLANS 0 1 2 3

UNIT:
PROJECT NUMBER & PHASE: 1200020278
CONTRACT NO.: 12-0F96C1

DISREGARD PRINTS BEARING EARLIER REVISION DATES
REVISION DATES: 04-27-12 09-24-12 01-14-13 04-22-13

SHEET 6 OF 14

FILE => 55E0133-g-sp02.dgn

USERNAME => s124496 DATE PLOTTED => 29-AUG-2013 TIME PLOTTED => 10:05

DIST	COUNTY	ROUTE	POST MILES TOTAL PROJECT	SHEET No	TOTAL SHEETS
12	Ora	5	3.7/6.2	773	780

REGISTERED CIVIL ENGINEER — DATE 4/22/13

8-26-13
PLANS APPROVAL DATE

REGISTERED PROFESSIONAL ENGINEER — MOHAN S. CHAR — No. 57894 — Exp. 6/30/14 — CIVIL — STATE OF CALIFORNIA

The State of California or its officers or agents shall not be responsible for the accuracy or completeness of electronic copies of this plan sheet.

ORANGE COUNTY TRANSPORTATION AUTHORITY
550 SOUTH MAIN STREET
ORANGE, CA 92863-1584

AECOM TECHNICAL SERVICES INC.
999 W. TOWN & COUNTRY ROAD
ORANGE, CALIFORNIA 92868

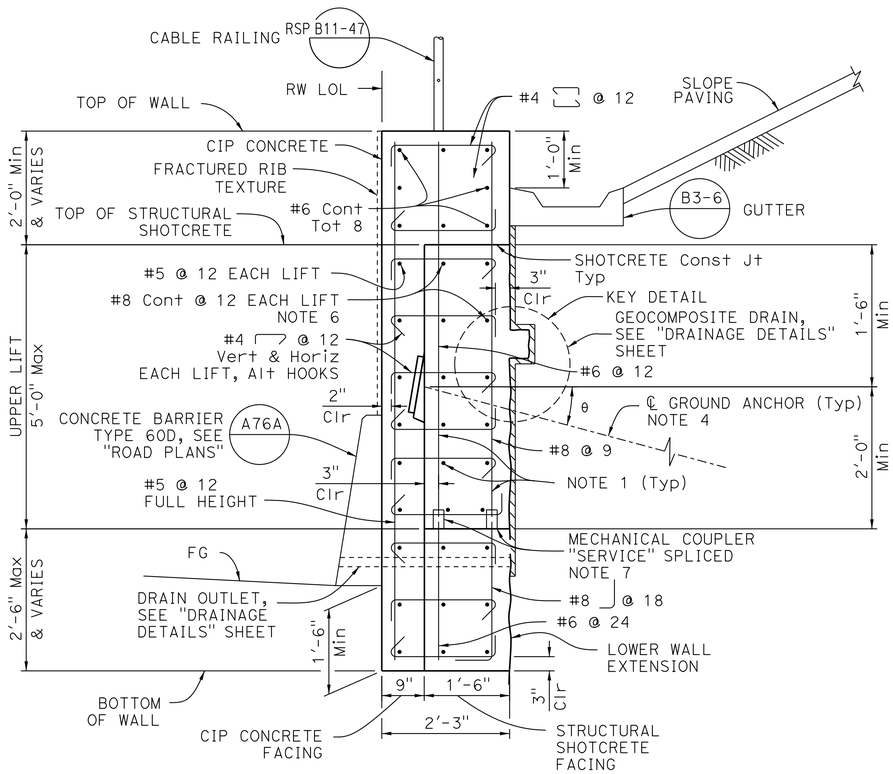

SECTION D-D

3/4" = 1'-0

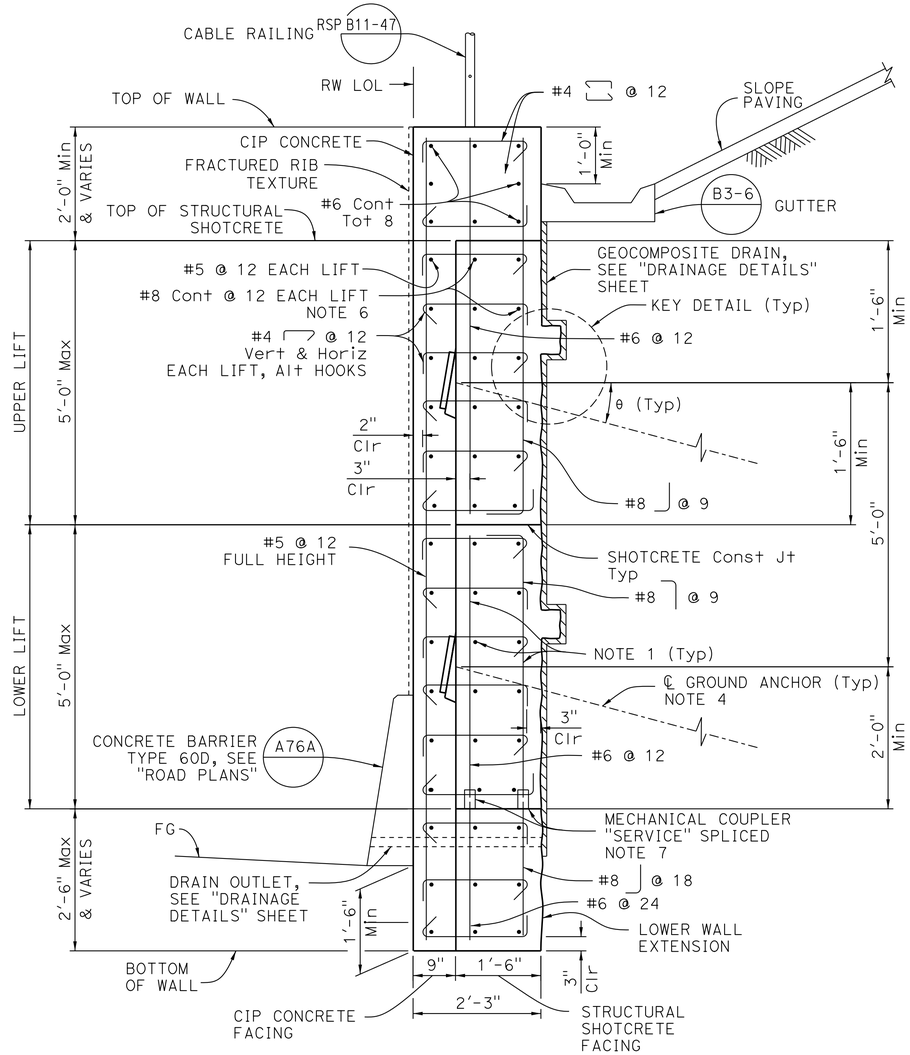

SECTION E-E

3/4" = 1'-0

NOTES:

1. Adjust horizontal and vertical reinforcing spacing to avoid conflict with ground anchor assembly in structural shotcrete facing. Bars should not be shifted more than 6" from the original position and the total number of bars must remain equal.
2. CIP concrete to be placed after completion of all structural shotcrete lifts.
3. Ground anchors shall be constructed and locked off one at a time beginning at the top and working down, in accordance with staging requirements.
4. For ground anchor inclination, see "STRUCTURE PLAN NO. 2" sheet.
5. All ground anchors within the upper lift shall be installed prior to commencing the lower lift excavations, in accordance with staging requirements.
6. #8 Cont @ 12 reinforcement shall be "Service" Spliced with mechanical couplers.
7. Where lower wall extensions are needed, extend reinforcing bars using mechanical couplers.
8. For "KEY DETAIL", see "RETAINING WALL DETAILS NO. 2" sheet.

NOTE:
THE CONTRACTOR SHALL VERIFY ALL CONTROLLING FIELD DIMENSIONS BEFORE ORDERING OR FABRICATING ANY MATERIAL.

DESIGN OVERSIGHT Luqi Yang — Luqi Yang
5-15-13
SIGN OFF DATE

	BY	CHECKED
DESIGN	M. Wise	D. Kim
DETAILS	H. Withers	D. Kim
QUANTITIES	M. Wise	D. Kim

PREPARED FOR THE STATE OF CALIFORNIA DEPARTMENT OF TRANSPORTATION

Mohan S. Char
PROJECT ENGINEER

BRIDGE NO. 55E0133
POST MILES 5.80

RETAINING WALL NO. 316R
RETAINING WALL DETAILS NO. 1

DESIGN DETAIL SHEET (ENGLISH) (REV.7/16/10)

ORIGINAL SCALE IN INCHES FOR REDUCED PLANS 0 1 2 3

UNIT:
PROJECT NUMBER & PHASE: 1200020278
CONTRACT NO.: 12-0F96C1

DISREGARD PRINTS BEARING EARLIER REVISION DATES → 04-27-12 | 09-24-12 | 01-14-13 | 04-22-13

SHEET 7 OF 14

FILE => 55E0133-h-twdt01.dgn

USERNAME => s124496 DATE PLOTTED => 29-AUG-2013 TIME PLOTTED => 10:05

DIST	COUNTY	ROUTE	POST MILES TOTAL PROJECT	SHEET No	TOTAL SHEETS
12	Ora	5	3.7/6.2	774	780

REGISTERED CIVIL ENGINEER — DATE 4/22/13

8-26-13
PLANS APPROVAL DATE

REGISTERED PROFESSIONAL ENGINEER — MOHAN S. CHAR — No. 57894 — Exp. 6/30/14 — CIVIL — STATE OF CALIFORNIA

The State of California or its officers or agents shall not be responsible for the accuracy or completeness of electronic copies of this plan sheet.

ORANGE COUNTY TRANSPORTATION AUTHORITY
550 SOUTH MAIN STREET
ORANGE, CA 92863-1584

AECOM TECHNICAL SERVICES INC.
999 W. TOWN & COUNTRY ROAD
ORANGE, CALIFORNIA 92868

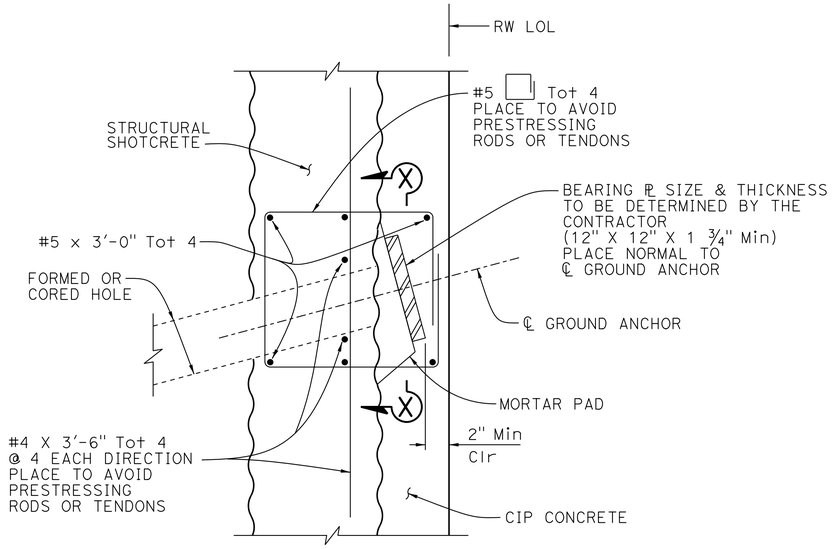

GROUND ANCHOR DETAILS

No Scale

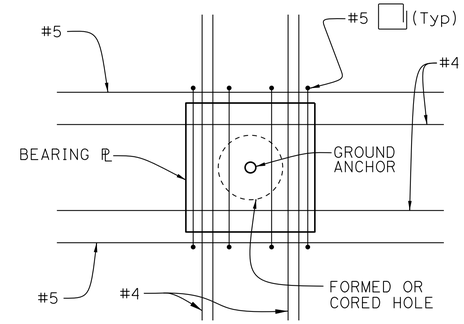

SECTION X-X

No Scale

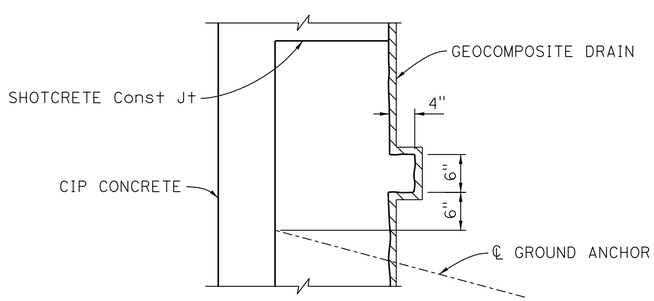

NOTE:

1. Reinforcing steel not shown for clarity.

KEY DETAIL

No Scale

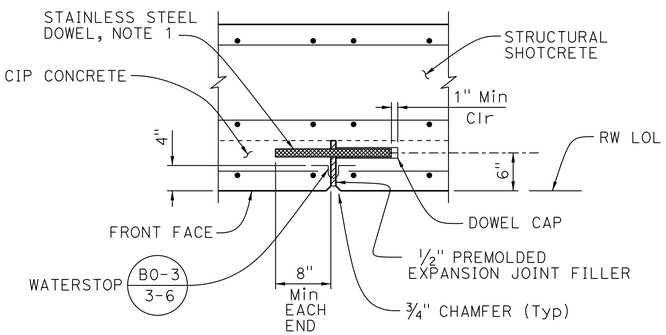

NOTE:

1. Smooth stainless steel 1 1/4" Dia x 18" dowels @ 12" C-C after one end is cast into first pour debond full length of exposed dowel by coating with a debonding agent prior to the second pour. Provide cap for 1" minimum expansion.

EXPANSION JOINT DETAIL

No Scale

NOTE:
THE CONTRACTOR SHALL VERIFY ALL CONTROLLING FIELD DIMENSIONS BEFORE ORDERING OR FABRICATING ANY MATERIAL.

DESIGN OVERSIGHT Luqi Yang — 5-15-13 — SIGN OFF DATE

	BY	CHECKED
DESIGN	M. Wise	D. Kim
DETAILS	H. Withers	D. Kim
QUANTITIES	M. Wise	D. Kim

PREPARED FOR THE STATE OF CALIFORNIA DEPARTMENT OF TRANSPORTATION

Mohan S. Char — PROJECT ENGINEER

BRIDGE NO. 55E0133 — POST MILES 5.80

RETAINING WALL NO. 316R
RETAINING WALL DETAILS NO. 2

DESIGN DETAIL SHEET (ENGLISH) (REV.7/16/10)

ORIGINAL SCALE IN INCHES FOR REDUCED PLANS 0 1 2 3

UNIT:
PROJECT NUMBER & PHASE: 1200020278 — CONTRACT NO.: 12-0F96C1

DISREGARD PRINTS BEARING EARLIER REVISION DATES → REVISION DATES 04-21-12 09-24-12 01-14-13 04-22-13 — SHEET 8 OF 14

FILE => 55E0133-h-twdt02.dgn

USERNAME => s124496 DATE PLOTTED => 29-AUG-2013 TIME PLOTTED => 10:05

DIST	COUNTY	ROUTE	POST MILES TOTAL PROJECT	SHEET No	TOTAL SHEETS
12	Ora	5	3.7/6.2	775	780

REGISTERED CIVIL ENGINEER — DATE 4/22/13

8-26-13
PLANS APPROVAL DATE

REGISTERED PROFESSIONAL ENGINEER — MOHAN S. CHAR — No. 57894 — Exp. 6/30/14 — CIVIL — STATE OF CALIFORNIA

The State of California or its officers or agents shall not be responsible for the accuracy or completeness of electronic copies of this plan sheet.

ORANGE COUNTY TRANSPORTATION AUTHORITY
550 SOUTH MAIN STREET
ORANGE, CA 92863-1584

AECOM TECHNICAL SERVICES INC.
999 W. TOWN & COUNTRY ROAD
ORANGE, CALIFORNIA 92868

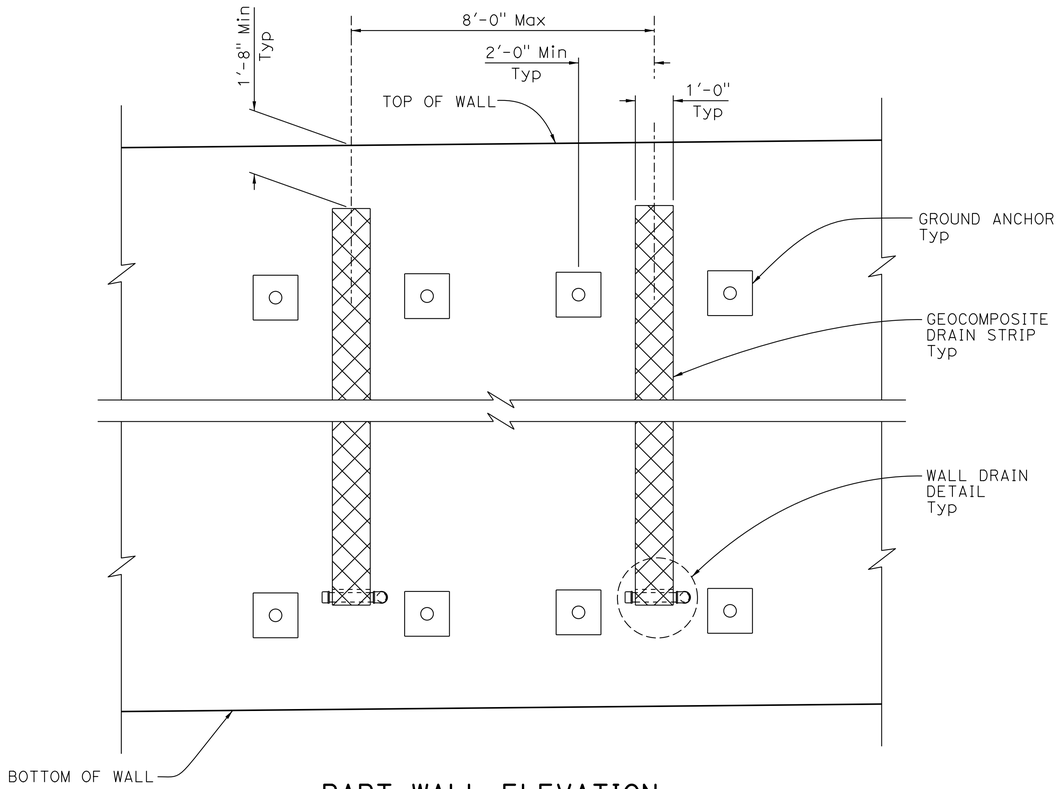

PART WALL ELEVATION

No Scale

NOTE:

1. Geocomposite drain strip per Section 88 Geosynthetics of the Standard Specifications

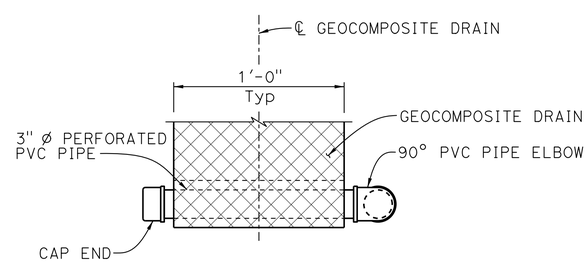

VIEW A-A

No Scale

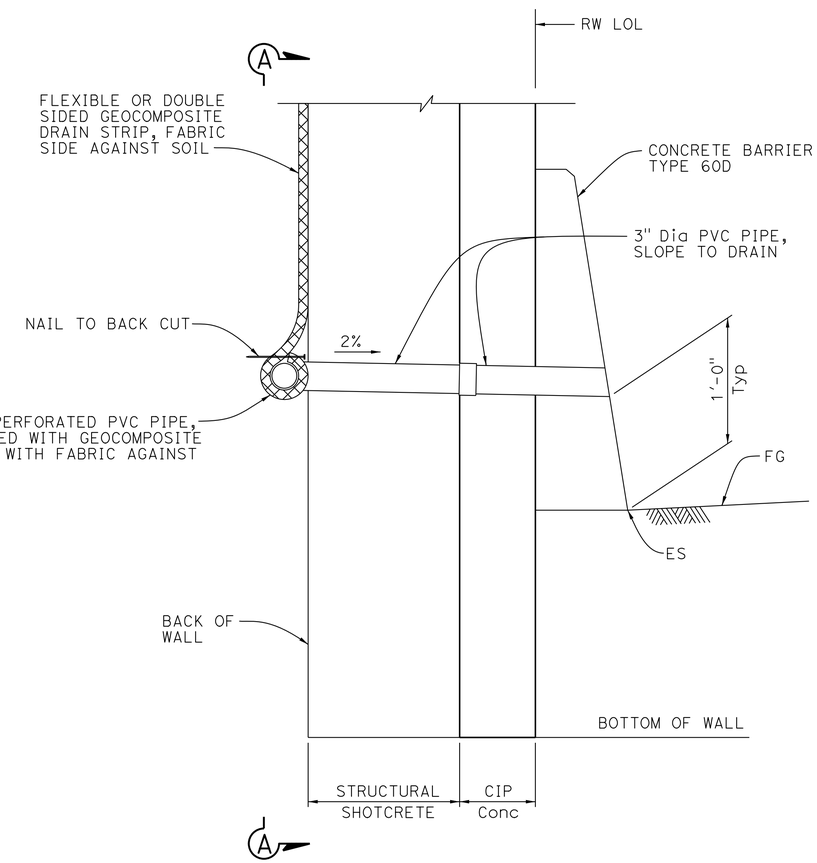

WALL DRAIN DETAIL

No Scale

NOTE:
THE CONTRACTOR SHALL VERIFY ALL CONTROLLING FIELD DIMENSIONS BEFORE ORDERING OR FABRICATING ANY MATERIAL.

Luqi Yang
DESIGN OVERSIGHT — Luqi Yang
5-15-13
SIGN OFF DATE

	BY	CHECKED
DESIGN	M. Wise	D. Kim
DETAILS	H. Withers	D. Kim
QUANTITIES	M. Wise	D. Kim

PREPARED FOR THE STATE OF CALIFORNIA DEPARTMENT OF TRANSPORTATION

Mohan S. Char
PROJECT ENGINEER

BRIDGE NO. 55E0133
POST MILES 5.80

RETAINING WALL NO. 316R
DRAINAGE DETAILS

DESIGN DETAIL SHEET (ENGLISH) (REV.7/16/10)

ORIGINAL SCALE IN INCHES FOR REDUCED PLANS 0 1 2 3

UNIT:
PROJECT NUMBER & PHASE: 1200020278 CONTRACT NO.: 12-0F96C1

DISREGARD PRINTS BEARING EARLIER REVISION DATES → 04-27-12 09-24-12 01-14-13 04-22-13

SHEET 9 OF 14

FILE => 55E0133-r-twdd.dgn

USERNAME => s124496 DATE PLOTTED => 29-AUG-2013 TIME PLOTTED => 10:05

DIST	COUNTY	ROUTE	POST MILES TOTAL PROJECT	SHEET No	TOTAL SHEETS
12	Ora	5	3.7/6.2	776	780

REGISTERED CIVIL ENGINEER — DATE 4/22/13

8-26-13
PLANS APPROVAL DATE

REGISTERED PROFESSIONAL ENGINEER — MOHAN S. CHAR No. 57894 Exp. 6/30/14 CIVIL — STATE OF CALIFORNIA

The State of California or its officers or agents shall not be responsible for the accuracy or completeness of electronic copies of this plan sheet.

ORANGE COUNTY TRANSPORTATION AUTHORITY
550 SOUTH MAIN STREET
ORANGE, CA 92863-1584

AECOM TECHNICAL SERVICES INC.
999 W. TOWN & COUNTRY ROAD
ORANGE, CALIFORNIA 92868

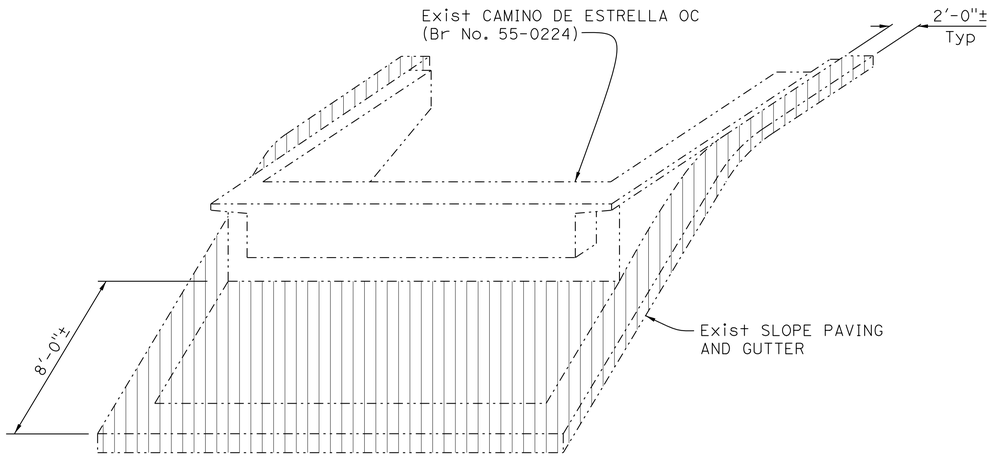

PICTORIAL VIEW

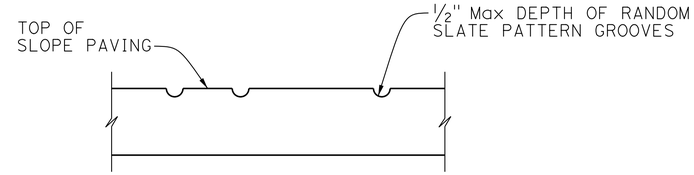

RANDOM SLATE PATTERN

NO SCALE

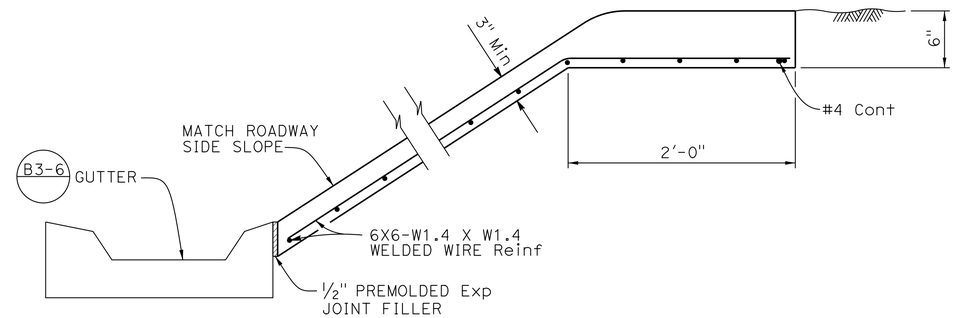

TYPICAL SECTION - CONCRETE PAVING (OUTSIDE BRIDGE)

NO SCALE

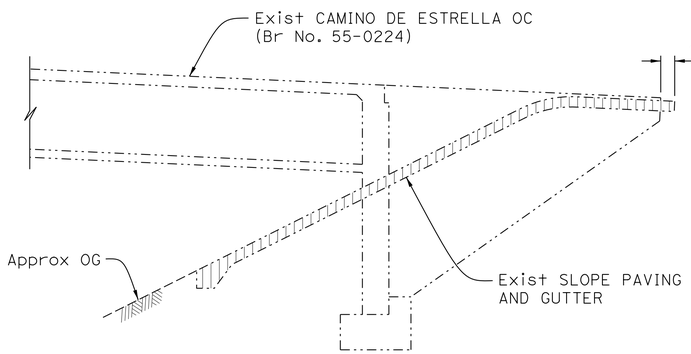

WINGWALL ELEVATION

SLOPE PAVING REMOVAL LIMITS

NO SCALE

LEGEND:

Slope paving removal

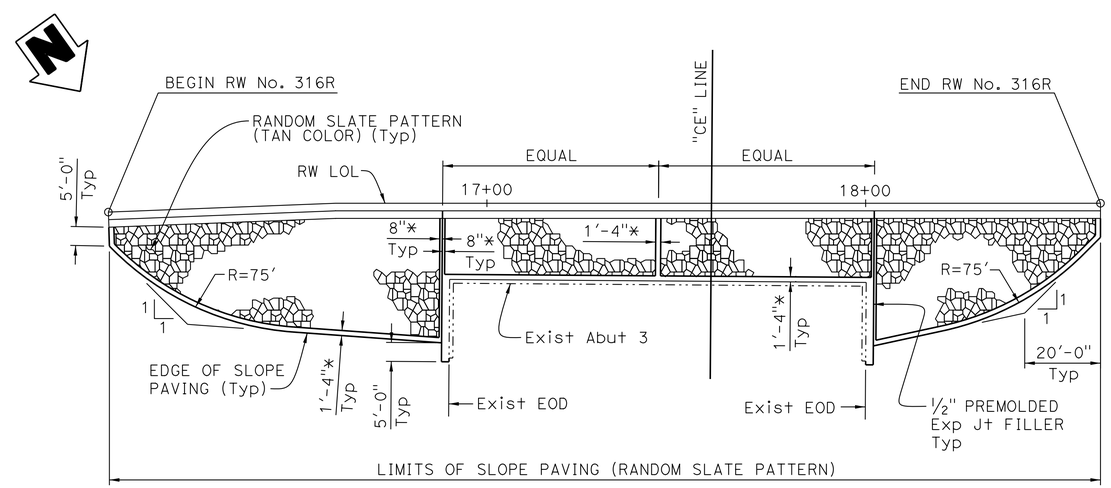

LIMITS OF SLOPE PAVING

1" = 20'

* WIDTH OF STIFF BROOM FINISH

NOTE:
THE CONTRACTOR SHALL VERIFY ALL CONTROLLING FIELD DIMENSIONS BEFORE ORDERING OR FABRICATING ANY MATERIAL.

DESIGN OVERSIGHT — Luqi Yang
5-15-13
SIGN OFF DATE

	BY	CHECKED
DESIGN	M. Wise	D. Kim
DETAILS	R. Andrasek	D. Kim
QUANTITIES	M. Wise	D. Kim

PREPARED FOR THE STATE OF CALIFORNIA DEPARTMENT OF TRANSPORTATION

Mohan S. Char
PROJECT ENGINEER

BRIDGE NO. 55E0133
POST MILES 5.80

RETAINING WALL NO. 316R
SLOPE PAVING DETAILS

DESIGN DETAIL SHEET (ENGLISH) (REV.7/16/10)

ORIGINAL SCALE IN INCHES FOR REDUCED PLANS 0 1 2 3

UNIT:
PROJECT NUMBER & PHASE: 1200020278
CONTRACT NO.: 12-0F96C1

DISREGARD PRINTS BEARING EARLIER REVISION DATES
REVISION DATES: 04-27-12 09-24-12 01-14-13 04-22-13
SHEET 10 OF 14

FILE => 55E0133-y-spdt01.dgn

USERNAME => s124496 DATE PLOTTED => 29-AUG-2013 TIME PLOTTED => 10:05

DIST	COUNTY	ROUTE	POST MILES TOTAL PROJECT	SHEET No.	TOTAL SHEETS
12	Ora	5	3.7/6.2	777	780

REGISTERED CIVIL ENGINEER — DATE 4/22/13

8-26-13
PLANS APPROVAL DATE

REGISTERED PROFESSIONAL ENGINEER — Mohan S. Char — No. 57894 — Exp. 6/30/14 — CIVIL — STATE OF CALIFORNIA

The State of California or its officers or agents shall not be responsible for the accuracy or completeness of electronic copies of this plan sheet.

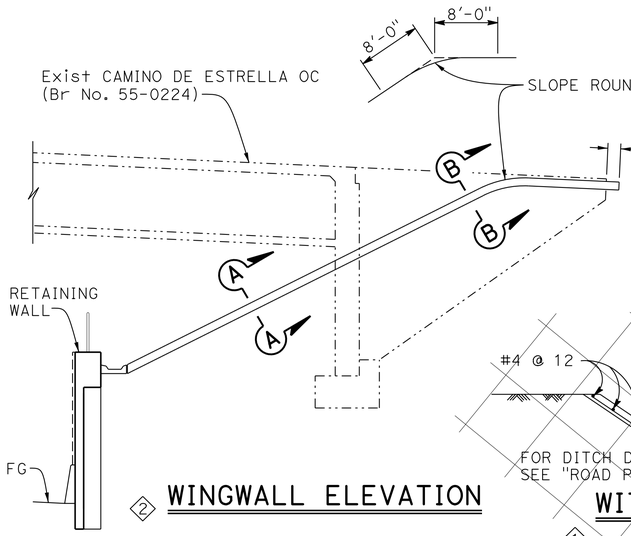

2 WINGWALL ELEVATION

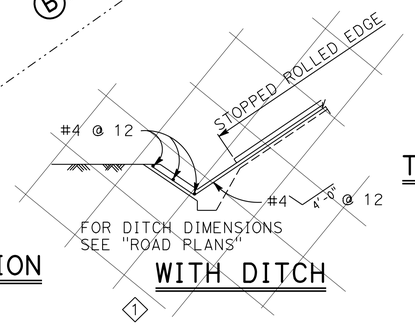

1 WITH DITCH

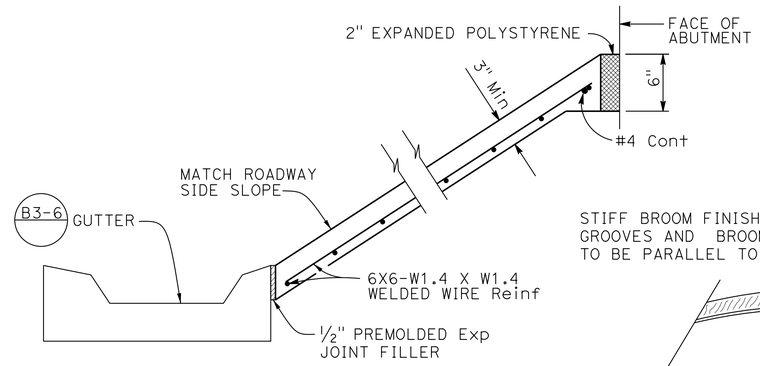

TYPICAL SECTION - CONCRETE PAVING 2
(UNDER BRIDGE)

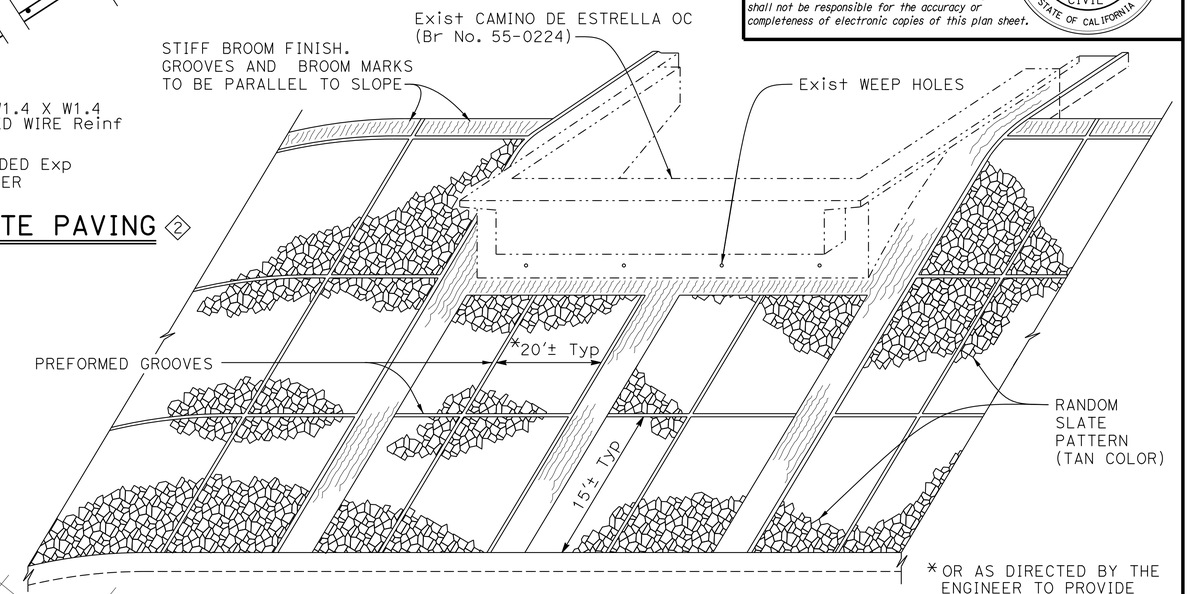

*OR AS DIRECTED BY THE ENGINEER TO PROVIDE UNIFORM SPACING

PICTORIAL VIEW OF TYPICAL INSTALLATION 2

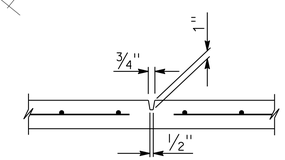

PREFORMED GROOVE

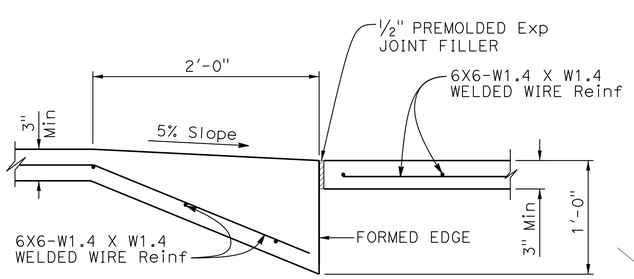

SECTION A-A 2

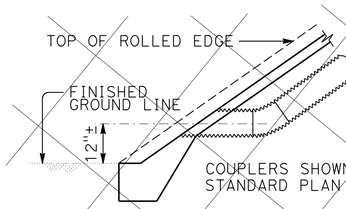

TYPICAL - NO CURB

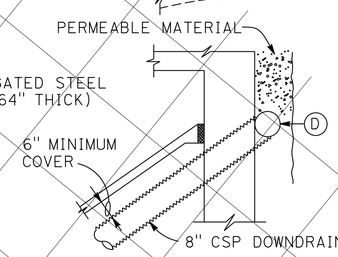

TYPICAL - DRAIN CONNECTION

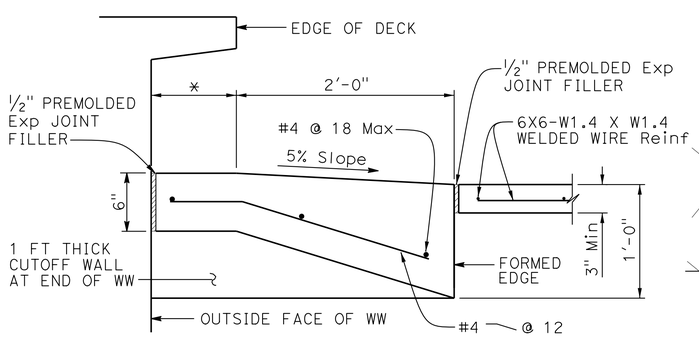

2 SECTION B-B

*THIS DIMENSION BECOMES ZERO WHEN EDGE OF DECK IS AT OUTSIDE FACE OF WW

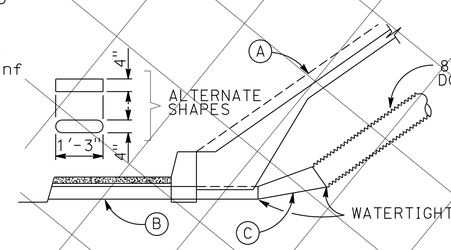

TYPICAL - WITH SIDEWALK

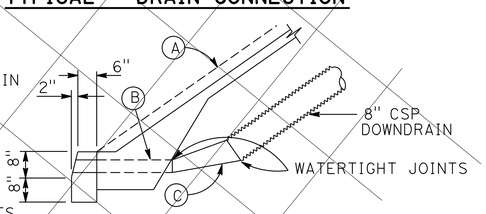

TYPICAL - WITH CURB

1 DRAINAGE DETAILS

NOTE:
Drainage details are only applicable when is indicated on detail sheets.

BO-3
3-5

1 LIMITS OF SLOPE PAVING & DRAINAGE LAYOUT

(A) Top of rolled edge

(B) Conduit:
0.064" galv corrugated steel or 0.109" smooth galv steel

(C) Taper: { 0.064" galv corrugated steel or 0.109" smooth galv steel

(D) 8" perforated steel pipe (0.064" thick) underdrain behind abutment. Connect to downdrain as shown on limits of Slope Paving & Drainage layout.

3 NOTE:
For actual limits of slope paving on this project and architectural details, see "SLOPE PAVING DETAILS" sheet.

NO SCALE

SPECIAL DETAILS

REVISED STANDARD DRAWING

FILE NO. xs4-210

APPROVAL DATE July 2011

1 DOES NOT APPLY
2 REVISED DETAIL
3 REVISED NOTE

STATE OF CALIFORNIA
DEPARTMENT OF TRANSPORTATION

DIVISION OF ENGINEERING SERVICES

BRIDGE NO. 55E0133
POST MILE 5.80

RETAINING WALL NO. 316R
SLOPE PAVING - FULL SLOPE

DS OSD 2147A (ENGLISH STANDARD DRAWING "XS" BORDER REV. (02-02-11)

ORIGINAL SCALE IN INCHES FOR REDUCED PLANS 0 1 2 3

UNIT:
PROJECT NUMBER & PHASE: 1200020278

CONTRACT NO.: 12-0F96C1

DISREGARD PRINTS BEARING EARLIER REVISION DATES

REVISION DATES 04-27-12 09-24-12 01-14-13 04-22-13

SHEET 11 OF 14

FILE => 55E0133-y-spdt02.dgn

USERNAME => s124496 DATE PLOTTED => 29-AUG-2013 TIME PLOTTED => 10:05

DIST	COUNTY	ROUTE	POST MILES TOTAL PROJECT	SHEET No.	TOTAL SHEETS
12	Ora	5	3.7/6.2	778	780

MKhar
REGISTERED CIVIL ENGINEER 4/22/13 DATE

8-26-13
PLANS APPROVAL DATE

REGISTERED PROFESSIONAL ENGINEER MOHAN S. CHAR No. 57894 Exp. 6/30/14 CIVIL STATE OF CALIFORNIA

The State of California or its officers or agents shall not be responsible for the accuracy or completeness of electronic copies of this plan sheet.

GENERAL NOTES

DESIGN:

AASHTO LRFD Bridge Design Specifications, 4th Edition with California Amendments.

PRESTRESSING STEEL:

Bars - ASTM Designation: A722 Type II (150 ksi)

Strand Tendons-ASTM Designation: A416 (270 Ksi Low Relaxation steel)

FTL = Factored Test Load per anchor (Kips)

fpu = Minimum tensile strength of prestressing steel

As = Minimum cross sectional area of prestressing steel in ground anchor (square inch)

$$As(Min) = \frac{1.0\ FTL}{0.75\ fpu} \quad \text{(Strands)}$$

$$As(Min) = \frac{1.0\ FTL}{0.80\ fpu} \quad \text{(Bars)}$$

NOTES:

(A) Level of initial grouting for drilled hole 6" in diameter or smaller

(B) Level of secondary grouting

(C) Level of initial grouting inside corrugated sheathing

(D) Bonded length shall be determined by the contractor

(E) For unbonded length, see STRUCTURE PLAN NO. 2 sheet

(F) For inclination, see STRUCTURE PLAN NO. 2 sheet

(G) Face of Wall Excavation

NOTES:

1. Anchorage enclosure shall only be used when anchor head assembly is not enclosed in concrete.
2. Anchorage enclosure shall have provisions to allow injecting grout at low end and venting at high end. Galvanize after fabrication.
3. Silicone sealant to cover full width of flange.
4. Steel tube (Min thickness = 1/4") welded to bearing plate. Galvanize assembly after fabrication
5. Steel tube welded to bearing plate. Inside diameter of steel tube (Min thickness = 1/4") to be 1" greater than outside diameter of smooth sheathing.
6. Galvanize assembly after fabrication.
7. For other wall details, see PROJECT PLANS.

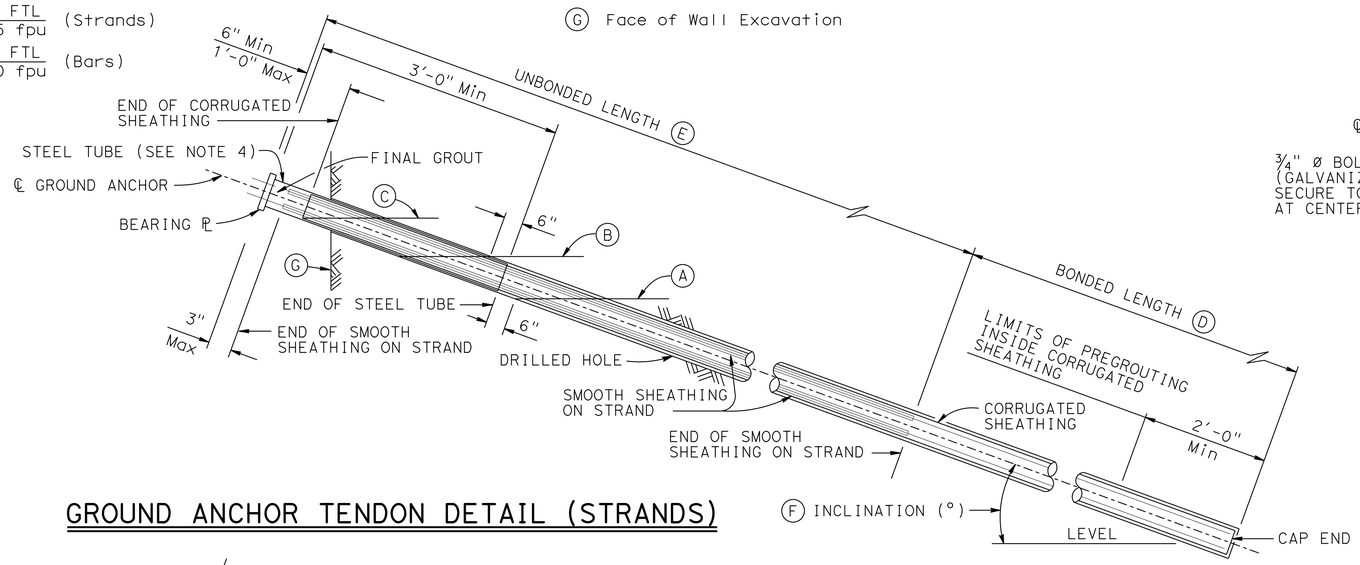

GROUND ANCHOR TENDON DETAIL (STRANDS)

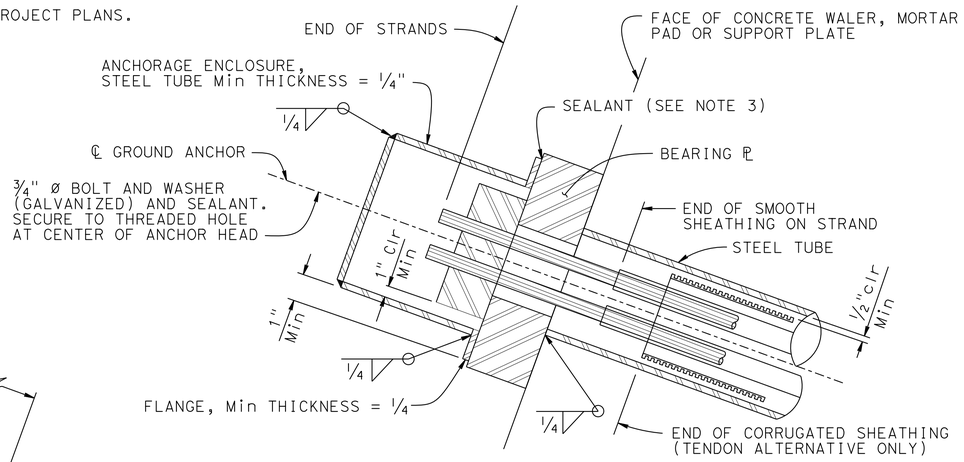

ALTERNATIVE X

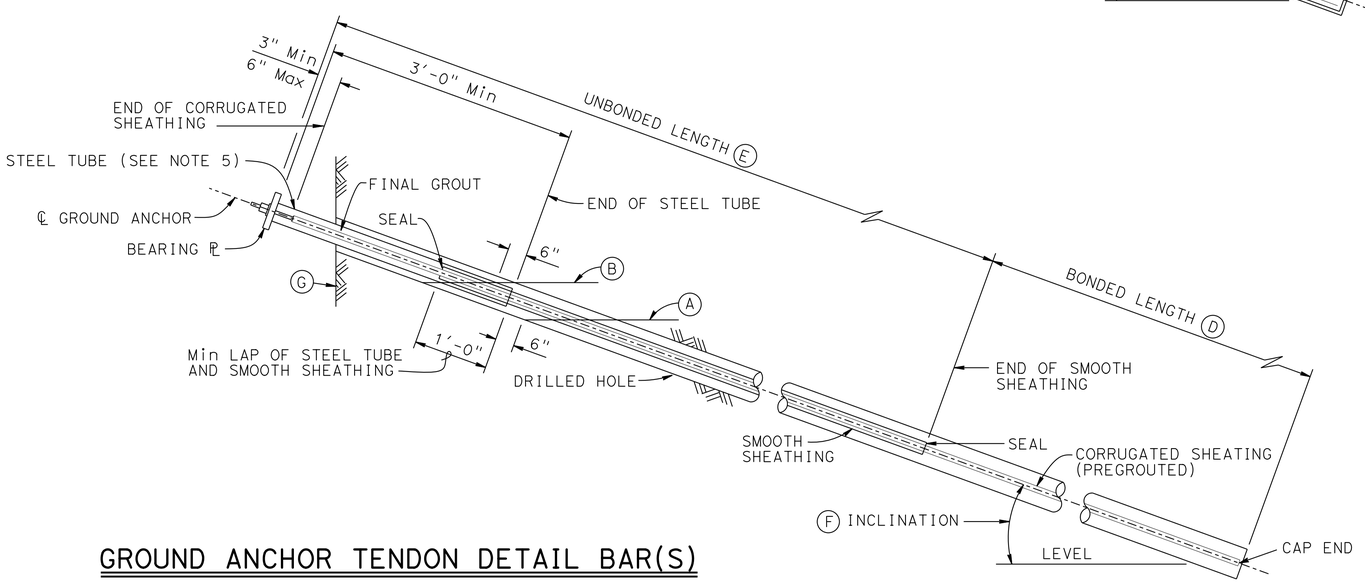

GROUND ANCHOR TENDON DETAIL BAR(S)

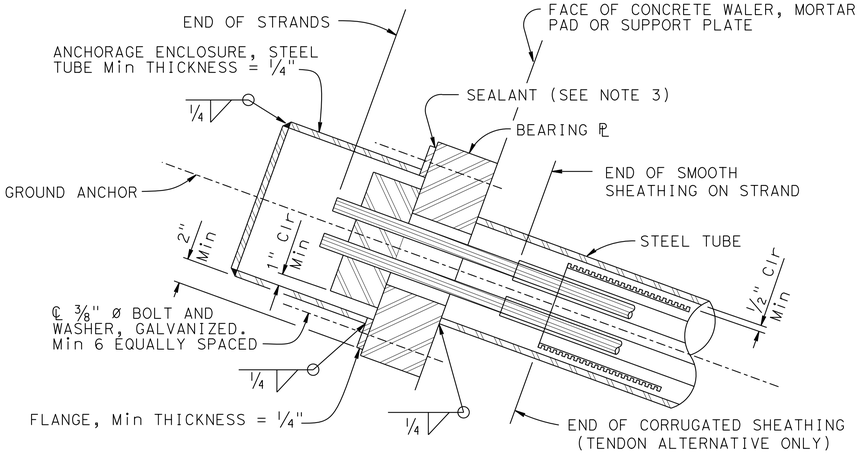

ALTERNATIVE Y

ANCHORAGE ENCLOSURE DETAILS

NO SCALE

SPECIAL DETAILS

REVISED STANDARD DRAWING

FILE NO. xs12-040

APPROVAL DATE January 2012

(1) REVISED NOTE

STATE OF CALIFORNIA DEPARTMENT OF TRANSPORTATION

DIVISION OF ENGINEERING SERVICES

BRIDGE NO. 55E0133

POST MILE 5.80

RETAINING WALL NO. 316R

SUB HORIZONTAL GROUND ANCHOR DETAILS

DS OSD 2147A (ENGLISH STANDARD DRAWING "XS" BORDER REV. (02-02-11)

ORIGINAL SCALE IN INCHES FOR REDUCED PLANS 0 1 2 3

UNIT:
PROJECT NUMBER & PHASE: 1200020278

CONTRACT NO.: 12-0F96C1

DISREGARD PRINTS BEARING EARLIER REVISION DATES

REVISION DATES 04-21-12 09-24-12 01-14-13 04-22-13

SHEET 12 OF 14

FILE => 55E0133-y-twdt.dgn

USERNAME => s124496 DATE PLOTTED => 29-AUG-2013 TIME PLOTTED => 10:05

DIST	COUNTY	ROUTE	POST MILES TOTAL PROJECT	SHEET No	TOTAL SHEETS
12	Ora	5	3.7/6.2	779	780

REGISTERED ENGINEER — 4/22/13 DATE

8-26-13
PLANS APPROVAL DATE

The State of California or its officers or agents shall not be responsible for the accuracy or completeness of electronic copies of this plan sheet.

REGISTERED PROFESSIONAL ENGINEER — A. KORKOS NO. GE 2357 EXP. 3-31-14 GEOTECHNICAL — STATE OF CALIFORNIA

ORANGE COUNTY TRANSPORTATION AUTHORITY
550 SOUTH MAIN STREET
ORANGE, CA 92863-1584

EARTH MECHANICS, INC.
17800 NEWHOPE STREET, SUITE B
FOUNTAIN VALLEY, CA 92708

BENCH MARK

DESIGNATION: 3SS-2-82 ELEV 95.558′

DESCRIBED BY OCS 2003 - FOUND 3¾" OCS ALUMINUM BENCH MARK DISK STAMPED "3SS-2-82", SET IN THE SOUTHEASTERLY CORNER OF A 4 FT. BY 4.5 FT. CONCRETE CATCH BASIN. MONUMENT IS LOCATED ALONG THE NORTHWESTERLY SIDE OF AVENIDA VAQUERO, 100 FT. NORTHERLY OF THE NORTHERLY EDGE OF THE SAN DIEGO FREEWAY OVERCROSSING OF AVENIDA VAQUERO, 23 FT. WESTERLY OF THE CENTERLINE OF VAQUERO AND 29.2 FT. SOUTHERLY OF A STREET STANDARD NO NUMBER. MONUMENT IS SET LEVEL WITH THE TOP OF THE CURB.

NOTES:

(1) This LOTB sheet was prepared in accordance with the Caltrans Soil and Rock Logging, Classification and Presentation Manual (June 2010).

(2) 2.4" samples were taken using a California Modified Sampler.

(3) An automatic trip hammer system consisting of a hammer weight of 140 lbs falling a distance of 30" was used to advance the drive sampler.

(4) Conversion factor from 2.4" Modified California Ring Sampler blowcounts to Standard Penetration Test (SPT) blowcounts is 0.5.

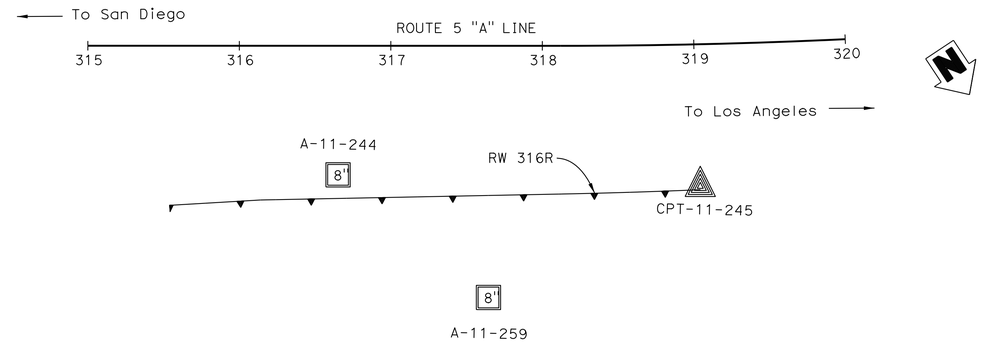

PLAN

1" = 50′

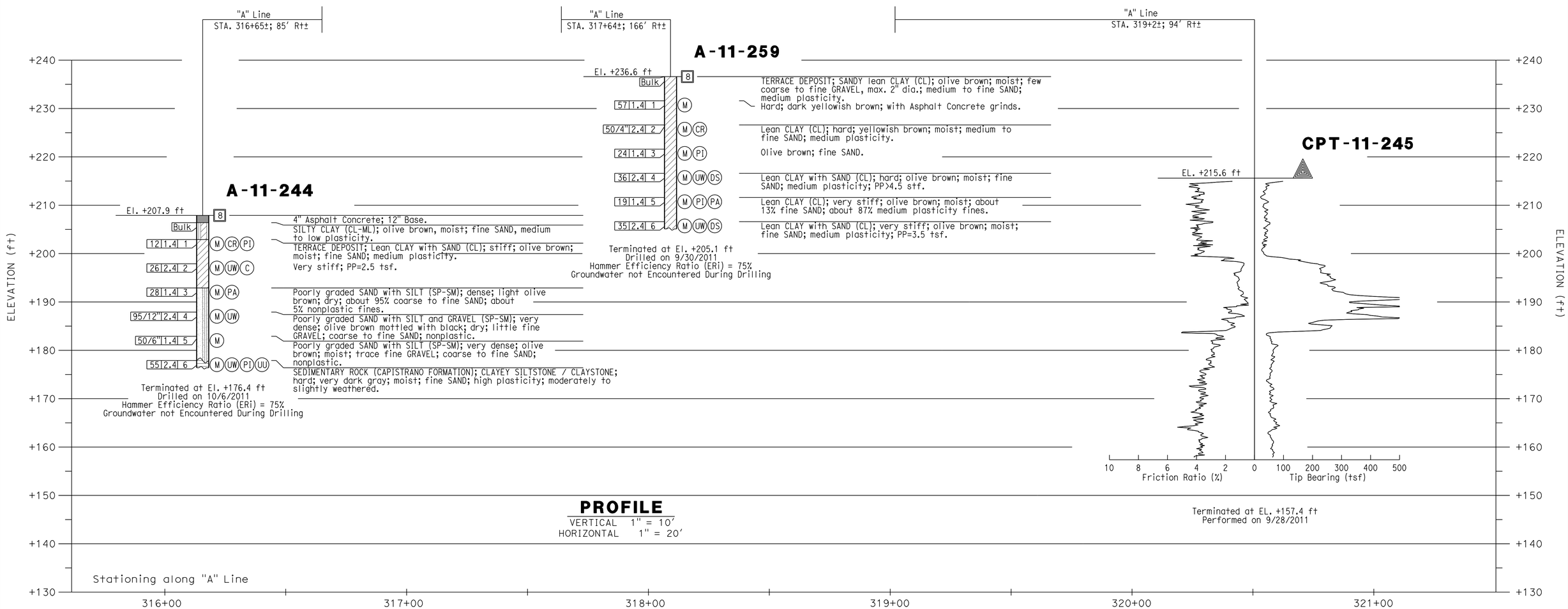

PROFILE

VERTICAL 1" = 10′
HORIZONTAL 1" = 20′

Luqi Yang — DESIGN OVERSIGHT Luqi Yang — 5-15-13 SIGN OFF DATE	DRAWN BY J. FANG	R. JIE — FIELD INVESTIGATION BY:	PREPARED FOR THE STATE OF CALIFORNIA DEPARTMENT OF TRANSPORTATION	A. KORKOS — PROJECT ENGINEER	BRIDGE NO. 55E0133	RETAINING WALL NO. 316R	
	CHECKED BY G. J. GUNARANJAN	DATE: 9/2011, 10/2011			POST MILES 5.80	LOG OF TEST BORINGS NO. 1 OF 2	

GS GEOTECHNICAL LOG OF TEST BORINGS SHEET (ENGLISH) (REV. 7/16/10)

ORIGINAL SCALE IN INCHES FOR REDUCED PLANS 0 1 2 3

UNIT:
PROJECT NUMBER & PHASE: 1200020278

DISREGARD PRINTS BEARING EARLIER REVISION DATES — REVISION DATES 04-27-12 09-24-12 01-14-13 04-22-13 — SHEET 13 OF 14

FILE => 55E0133-z-lotb1.dgn

CONTRACT NO.:12-0F96C1 PROJECT ID:1200020278

USERNAME => s124396 DATE PLOTTED => 29-AUG-2013 TIME PLOTTED => 10:05

DIST.	COUNTY	ROUTE	POST MILES
7	ORA	5	3.7/6.2

STATE	F.A. PROJECT NO.	SHEET NO.	TOTAL SHEETS
CALIF.			

DATE	HIGHWAY	DISTRICT	SECTION	SHEET NO.	TOTAL SHEETS
07	ORA	5	07/6/38/A	538	
	SD	5	07/1/0222		

Robert W. Sigmund #1465
DESIGN ENGINEER
DATE APPROVED March 12, 1979

BENCH MARK

BM # 318-2A-60 Elev. 206.92

Std. Brass Cap Monument 4' Rt ℄ Fwy Sta. 318+10.92 BC

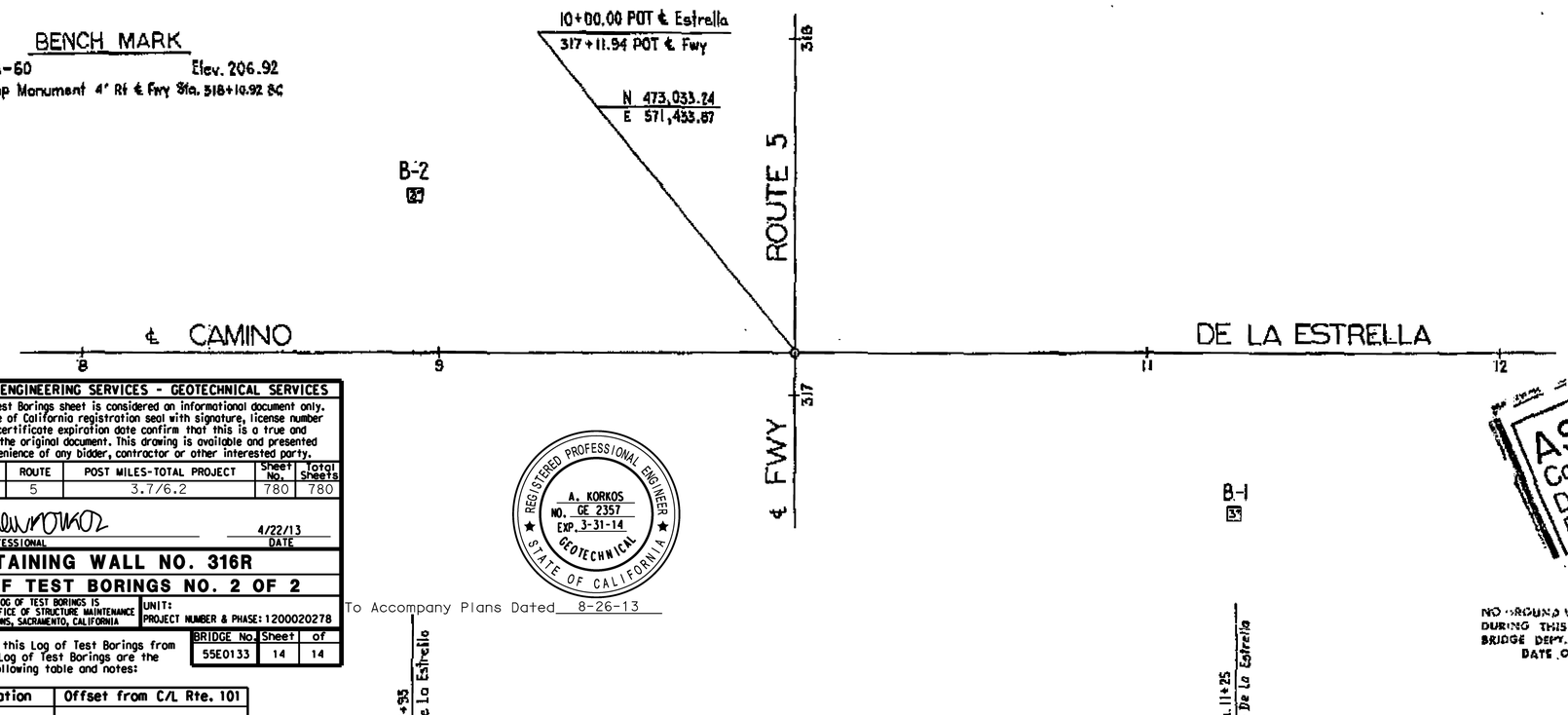

AS BUILT PLANS
Contract No. 07-105274
Date Completed
Document No.

PLAN
Scale 1" = 20'

DIVISION OF ENGINEERING SERVICES - GEOTECHNICAL SERVICES					
As-Built Log of Test Borings sheet is considered an informational document only. As such, the State of California registration seal with signature, license number and registration certificate expiration date confirm that this is a true and accurate copy of the original document. This drawing is available and presented only for the convenience of any bidder, contractor or other interested party.					
DIST.	COUNTY	ROUTE	POST MILES-TOTAL PROJECT	Sheet No.	Total Sheets
12	Ora	5	3.7/6.2	780	780
GEOTECHNICAL PROFESSIONAL				4/22/13 DATE	
RETAINING WALL NO. 316R					
LOG OF TEST BORINGS NO. 2 OF 2					
NOTE: A COPY OF THIS LOG OF TEST BORINGS IS AVAILABLE AT OFFICE OF STRUCTURE MAINTENANCE AND INVESTIGATIONS, SACRAMENTO, CALIFORNIA			UNIT: PROJECT NUMBER & PHASE: 1200020278		
			BRIDGE No.	Sheet	of
			55E0133	14	14

REGISTERED PROFESSIONAL ENGINEER
A. KORKOS
NO. GE 2357
EXP. 3-31-14
GEOTECHNICAL
STATE OF CALIFORNIA

To Accompany Plans Dated 8-26-13

Revisions made to this Log of Test Borings from the original ____ Log of Test Borings are the addition of the following table and notes:

Boring	Station	Offset from C/L Rte. 101

NO GROUND WATER ENCOUNTERED DURING THIS INVESTIGATION BY BRIDGE DEPT. GEOLOGY SECTION DATE OCTOBER, 1966

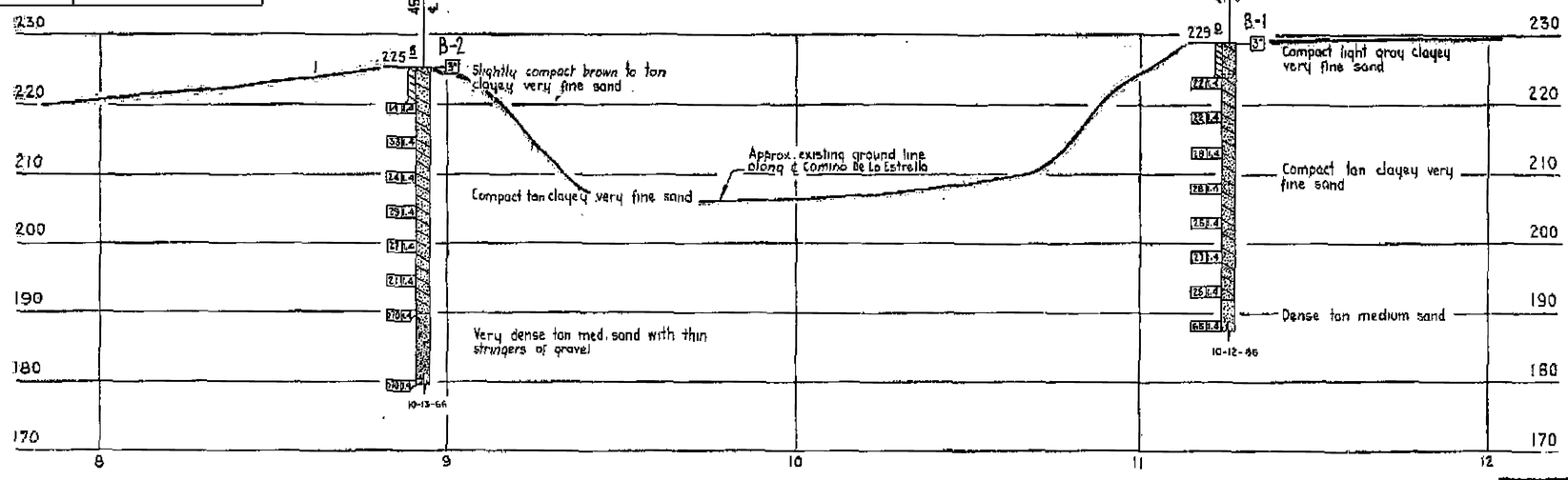

NO AS BUILT CORRECTION

AS BUILT
CORRECTIONS BY W. Lohse
CONTRACT NO. 07-105274
DATE 4-1-83 and 10-18-83

PROFILE
Scale: Vert. 1" = 10
Horiz. 1" = 20

Sht 12 of 12

LEGEND OF BORING OPERATIONS

LEGEND OF EARTH MATERIALS

CLASSIFICATION OF MATERIAL BASED ON STANDARD GRADE SIZE LIMITS

NOTE: Classification of earth material as shown on this sheet is based upon field inspection and is not to be construed to imply mechanical analysis.

FIELD STUDY By: G. Alvarez 10-27-66
DRAWN By: V. Sevtoras 10-18-86
CHECKED By: D. Mikkel 11-23-66
Engineering Geologist

BRIDGE DEPARTMENT
ENGINEERING GEOLOGY SECTION

538

STATE OF CALIFORNIA
DEPARTMENT OF TRANSPORTATION

CAMINO DE ESTRELLA OVERCROSSING
REPLACE

LOG OF TEST BORINGS

SCALE As Noted | BRIDGE 55-224 | FILE | DRAWING 55-224-11

Charge 07209
W.A. 105274

Disregard prior bearing earlier numbers

PREL. DRAWING No. PR-