ACHSNHG-P241(002)E

Dist	COUNTY	ROUTE	POST MILES TOTAL PROJECT	SHEET No.	TOTAL SHEETS
12	Ora	241	15.5/39.0	1	117

STATE OF CALIFORNIA
DEPARTMENT OF TRANSPORTATION

PROJECT PLANS FOR CONSTRUCTION ON
STATE HIGHWAY

IN ORANGE COUNTY
FROM OSO PARKWAY
TO ROUTE 241/91 SEPARATION

TO BE SUPPLEMENTED BY STANDARD PLANS DATED MAY 2006

INDEX OF PLANS

SHEET No.	DESCRIPTION
1	TITLE AND LOCATION MAP
2-4	KEY MAP AND LINE INDEX
5-38	CONSTRUCTION DETAILS
39-41	TEMPORARY WATER POLLUTION CONTROL PLAN, DETAILS AND QUANTITIES
42-65	SUMMARY OF QUANTITIES
66-69	ELECTRICAL PLANS
70-117	REVISED AND NEW STANDARD PLANS

THE STANDARD PLANS LIST APPLICABLE TO THIS CONTRACT IS INCLUDED IN THE NOTICE TO BIDDERS AND SPECIAL PROVISIONS BOOK.

LOCATION MAP

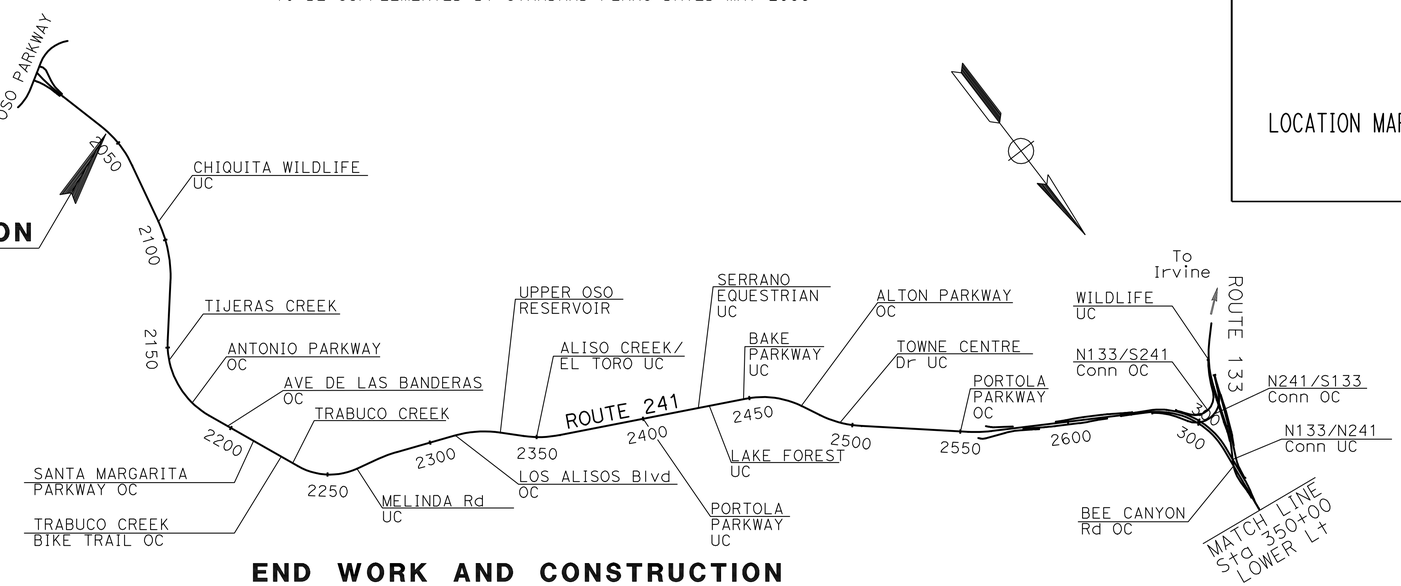

BEGIN WORK AND CONSTRUCTION
Sta"241A1"2048+19 PM 15.5

END WORK AND CONSTRUCTION
Sta"91ES241"4937+73 PM 39.0

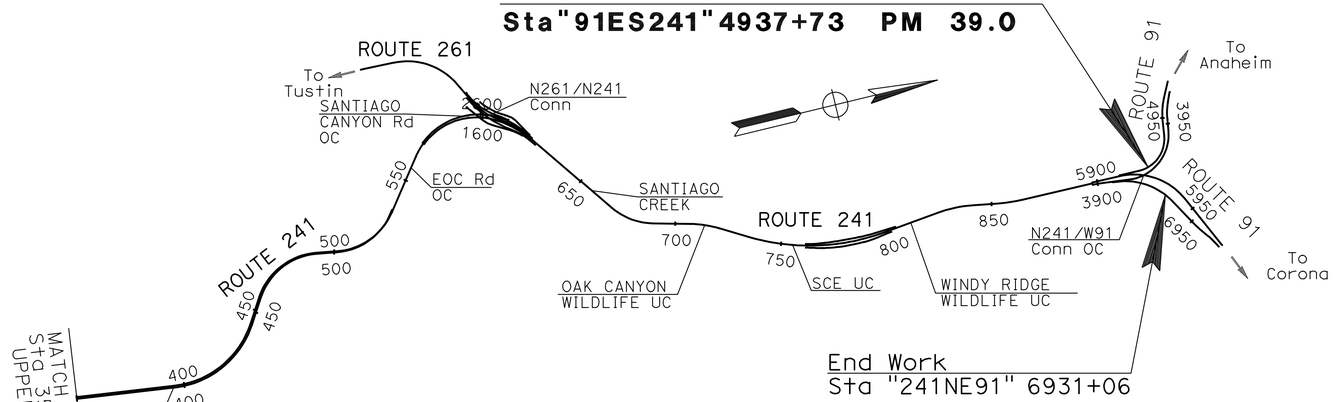

NO SCALE

THE CONTRACTOR SHALL POSSESS THE CLASS (OR CLASSES) OF LICENSE AS SPECIFIED IN THE "NOTICE TO BIDDERS."

Lindsay M. Kaufmann 09-01-10
PROJECT ENGINEER DATE
REGISTERED CIVIL ENGINEER

October 18, 2010
PLANS APPROVAL DATE

REGISTERED PROFESSIONAL ENGINEER LINDSAY M. KAUFMANN No. C71806 Exp. 12/31/11 CIVIL STATE OF CALIFORNIA

THE STATE OF CALIFORNIA OR ITS OFFICERS OR AGENTS SHALL NOT BE RESPONSIBLE FOR THE ACCURACY OR COMPLETENESS OF SCANNED COPIES OF THIS PLAN SHEET.

RBF CONSULTING
14725 ALTON PARKWAY
IRVINE, CA 92618

CONTRACT No.	12-0G3704
PROJECT ID	1200000143

CONSULTANT DESIGN ENGINEER	CALTRANS DESIGN OVERSIGHT APPROVAL	REGISTRATION No.	LICENSE Exp DATE	DATE SIGNED
LINDSAY KAUFMANN	KAMRAN MAZHAR K mazhar	48436	06/30/12	08/31/10

APPROVED AS TO IMPACT ON STATE FACILITIES AND CONFORMANCE WITH APPLICABLE STATE STANDARDS AND PRACTICES AND THAT TECHNICAL OVERSIGHT WAS PERFORMED.

S:\vinhnpham\12-0G3701_Consultant\c0G370ab001.dgn 28-APR-2011 06:10 trmikesl

LAST REVISION 06-08-10 DATE PLOTTED => 28-APR-2011 TIME PLOTTED => 06:10

Dist	COUNTY	ROUTE	POST MILES TOTAL PROJECT	SHEET No.	TOTAL SHEETS
12	Ora	241	15.5/39.0	2	117

Lindsay M. Kaufmann 09/01/10
REGISTERED CIVIL ENGINEER DATE

10-18-10
PLANS APPROVAL DATE

REGISTERED PROFESSIONAL ENGINEER LINDSAY M. KAUFMANN No. C71806 Exp. 12/31/11 CIVIL STATE OF CALIFORNIA

THE STATE OF CALIFORNIA OR ITS OFFICERS OR AGENTS SHALL NOT BE RESPONSIBLE FOR THE ACCURACY OR COMPLETENESS OF SCANNED COPIES OF THIS PLAN SHEET.

RBF CONSULTING
14725 ALTON PKWY
IRVINE, CA. 92618-2027

LINE INDEX

LINE	DESCRIPTION
OSO241	OSO PARKWAY
241RMPOS1	OSO/241 NB ENTRANCE RAMP
241RMPOS4	241/OSO SB EXIT RAMP
241A1	ROUTE 241
241NP2	PORTOLA/241 NB ENTRANCE RAMP
241NP3	241/PORTOLA SB EXIT RAMP
241NBTOLL2	NB ROUTE 241 TOLL PLAZA
241SBTOLL2	SB ROUTE 241 TOLL PLAZA
241NB1	NB ROUTE 241
241SB1	SB ROUTE 241
241WS133	WB ROUTE 241 CONNECTOR TO SB ROUTE 133
133NE241	NB ROUTE 133 CONNECTOR TO EB ROUTE 241
133NNT241	NB ROUTE 133 CONNECTOR TO NB ROUTE 241 TOLL PLAZA
241SST133	SB ROUTE 241 CONNECTOR TO SB ROUTE 133 TOLL PLAZA
133N241	NB ROUTE 133 CONNECTOR TO NB ROUTE 241
241S133	SB ROUTE 241 CONNECTOR TO SB ROUTE 133
241A2	SB ROUTE 241
241B1	NB ROUTE 241
241NBR1	NB ROUTE 241
241SBR1	SB ROUTE 241
261B241	ROUTE 261 TO ROUTE 241 CONNECTOR
261N241	NB ROUTE 261 CONNECTOR TO NB ROUTE 241
241S261	SB ROUTE 241 CONNECTOR TO SB ROUTE 261
241CH7	241/CHAPMAN SB EXIT RAMP
241CH8	CHAPMAN/241 NB ENTRANCE RAMP
241A3	ROUTE 241
241NBTOLL1	NB ROUTE 241 TOLL PLAZA
241SBTOLL1	SB ROUTE 241 TOLL PLAZA
241NW91	NB ROUTE 241 CONNECTOR TO WB ROUTE 91
91WS241	WB ROUTE 91 CONNECTOR TO SB ROUTE 241
241NE91	NB ROUTE 241 CONNECTOR TO EB ROUTE 91
91ES241	EB ROUTE 91 CONNECTOR TO SB ROUTE 241

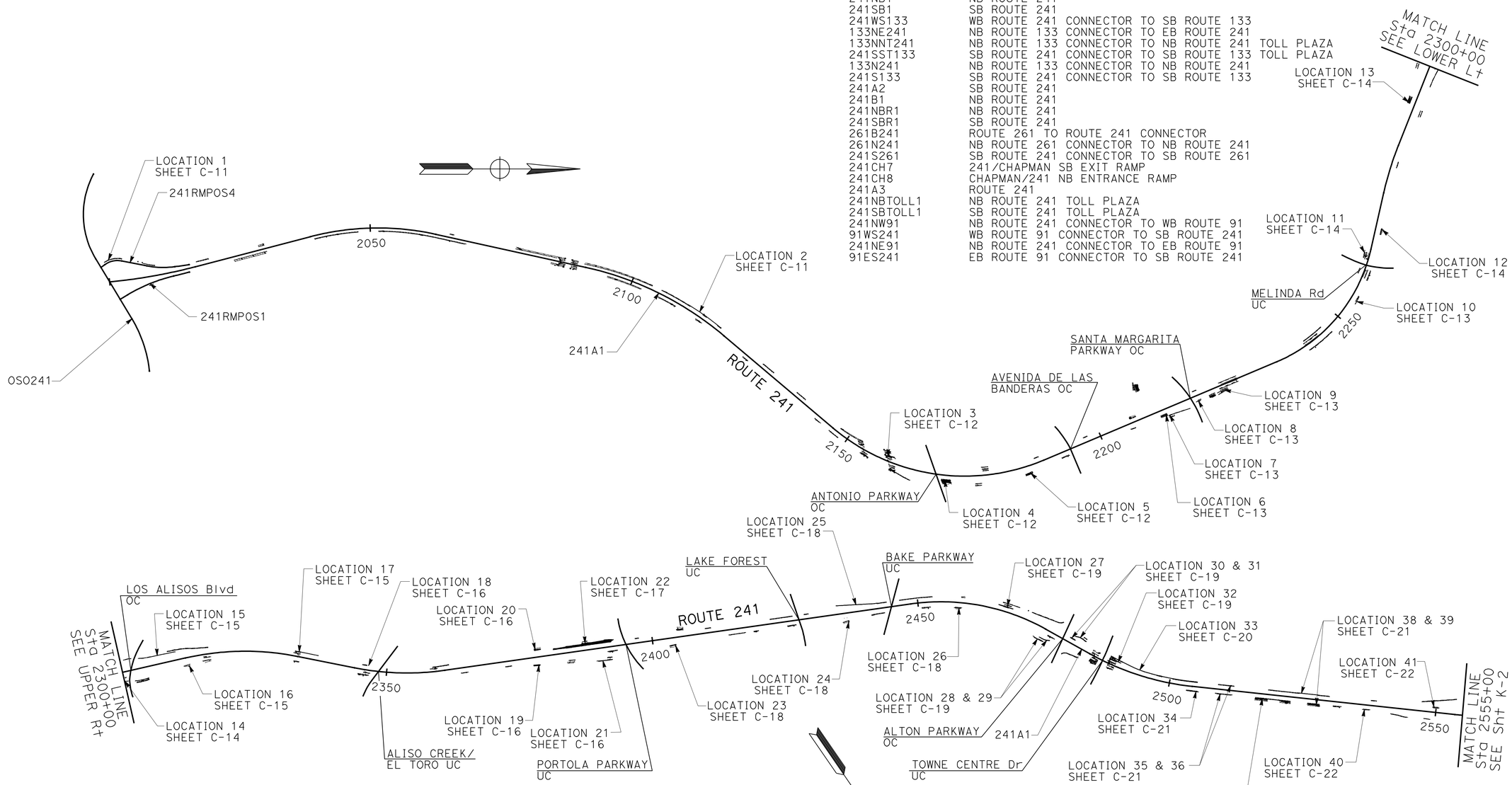

KEY MAP & LINE INDEX

SCALE: 1" = 1000'

K-1

STATE OF CALIFORNIA - DEPARTMENT OF TRANSPORTATION
Caltrans

CONSULTANT FUNCTIONAL SUPERVISOR: MIKE CHESNEY
CALCULATED-DESIGNED BY: LINDSAY KAUFMANN
CHECKED BY: LINDSAY KAUFMANN
REVISED BY: RK/WT
DATE REVISED: 07/22/10

H:\pdata\10106739\CADD\TransPW\Div\Merge\8-24-10\c0G370da001.dgn trlenard 19-OCT-2010 13:32

LAST REVISION 06-08-10 | DATE PLOTTED => 19-OCT-2010 | TIME PLOTTED => 13:32

BORDER LAST REVISED 7/2/2010 | USERNAME => trlenard | DGN FILE => c0G370da001.dgn | RELATIVE BORDER SCALE IS IN INCHES 0 1 2 3 | UNIT 2998 | PROJECT NUMBER & PHASE 12000001431

Dist	COUNTY	ROUTE	POST MILES TOTAL PROJECT	SHEET No.	TOTAL SHEETS
12	Ora	241	15.5/39.0	3	117

Lindsay M. Kaufmann 09/01/10
REGISTERED CIVIL ENGINEER DATE

10-18-10
PLANS APPROVAL DATE

REGISTERED PROFESSIONAL ENGINEER LINDSAY M. KAUFMANN No. C71806 Exp. 12/31/11 CIVIL STATE OF CALIFORNIA

THE STATE OF CALIFORNIA OR ITS OFFICERS OR AGENTS SHALL NOT BE RESPONSIBLE FOR THE ACCURACY OR COMPLETENESS OF SCANNED COPIES OF THIS PLAN SHEET.

RBF CONSULTING
14725 ALTON PKWY
IRVINE, CA. 92618-2027

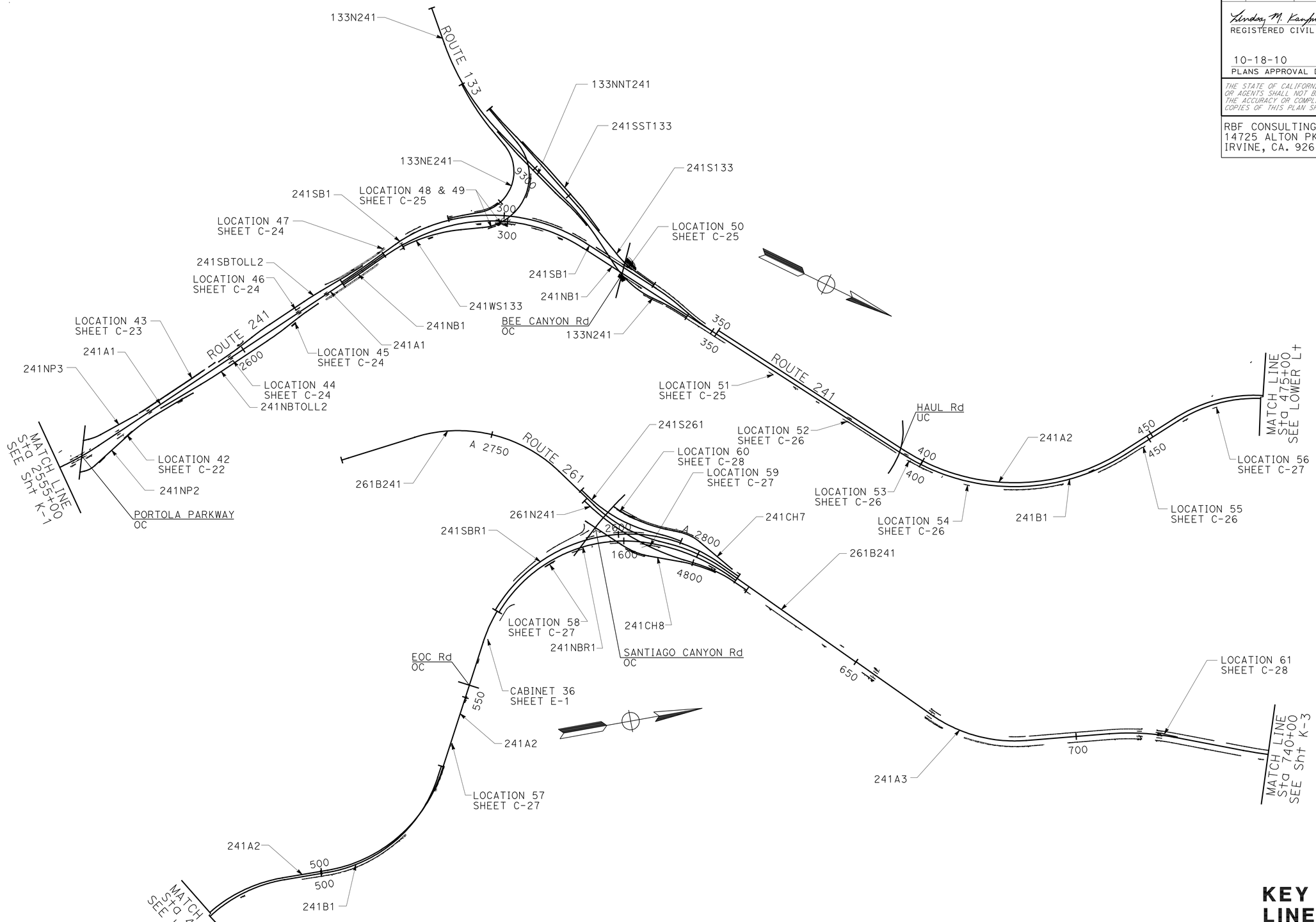

KEY MAP & LINE INDEX

SCALE: 1" = 1000'

K-2

REVISED BY	DATE REVISED
RK/WT	07/22/10

CALCULATED-DESIGNED BY: LINDSAY KAUFMANN
CHECKED BY: LINDSAY KAUFMANN
CONSULTANT FUNCTIONAL SUPERVISOR: MIKE CHESNEY

STATE OF CALIFORNIA - DEPARTMENT OF TRANSPORTATION
Caltrans

H:\pdata\10106739\CADD\TransPW\Div\Merge\8-24-10\c0G370da002.dgn
trlenard 19-OCT-2010 13:32

LAST REVISION 0G-08-10 | DATE PLOTTED => 19-OCT-2010 | TIME PLOTTED => 13:32

Dist	COUNTY	ROUTE	POST MILES TOTAL PROJECT	SHEET No.	TOTAL SHEETS
12	Ora	241	15.5/39.0	4	117

Lindsay M. Kaufmann
REGISTERED CIVIL ENGINEER 09/01/10
DATE

10-18-10
PLANS APPROVAL DATE

REGISTERED PROFESSIONAL ENGINEER
LINDSAY M. KAUFMANN
No. C71806
Exp. 12/31/11
CIVIL
STATE OF CALIFORNIA

THE STATE OF CALIFORNIA OR ITS OFFICERS OR AGENTS SHALL NOT BE RESPONSIBLE FOR THE ACCURACY OR COMPLETENESS OF SCANNED COPIES OF THIS PLAN SHEET.

RBF CONSULTING
14725 ALTON PKWY
IRVINE, CA. 92618-2027

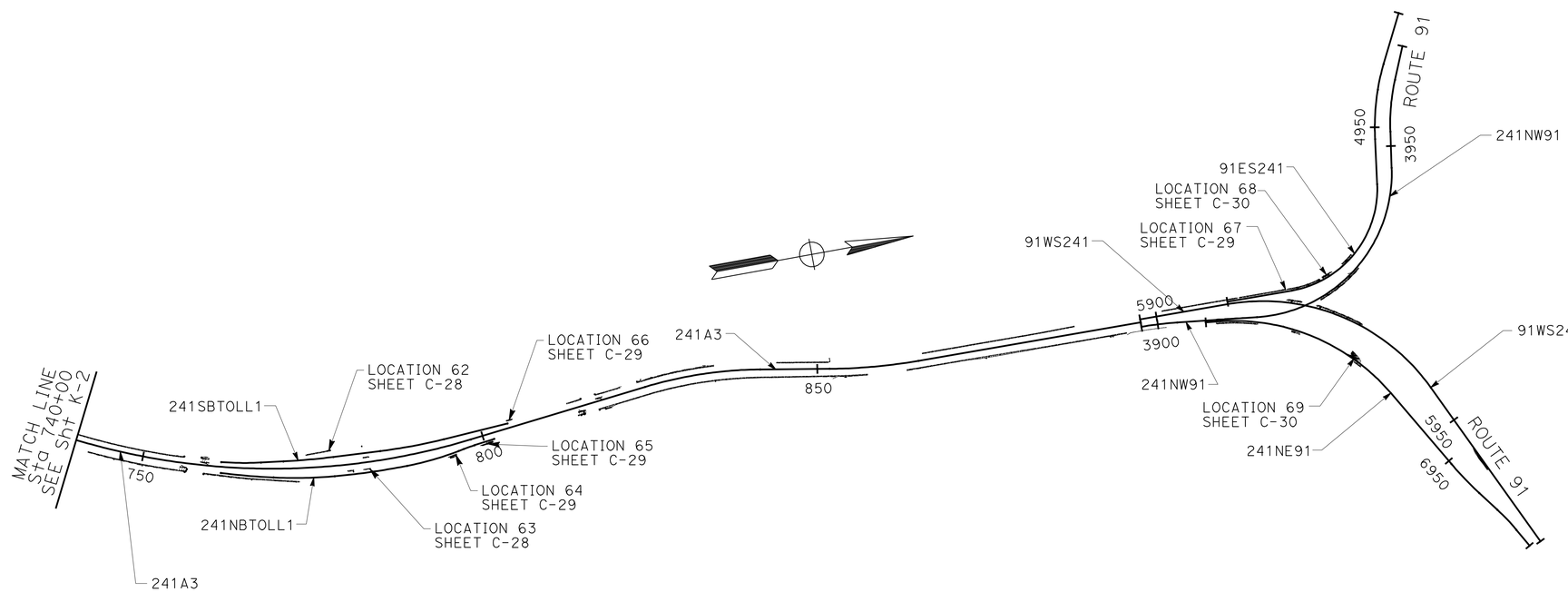

KEY MAP & LINE INDEX

SCALE: 1" = 1000'

K-3

STATE OF CALIFORNIA - DEPARTMENT OF TRANSPORTATION
Caltrans
CONSULTANT FUNCTIONAL SUPERVISOR: MIKE CHESNEY
CALCULATED-DESIGNED BY: LINDSAY KAUFMANN
CHECKED BY: LINDSAY KAUFMANN
REVISED BY: RK/WT
DATE REVISED: 07/22/10

H:\pdata\10106739\CADD\TransPW\Div\Merge\8-24-10\c0G370da003.dgn trlenard 19-OCT-2010 13:32

LAST REVISION 06-08-10 | DATE PLOTTED => 19-OCT-2010 | TIME PLOTTED => 13:32

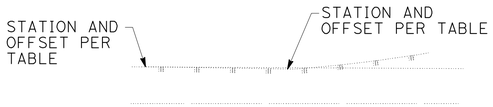

CASE A PLANVIEW

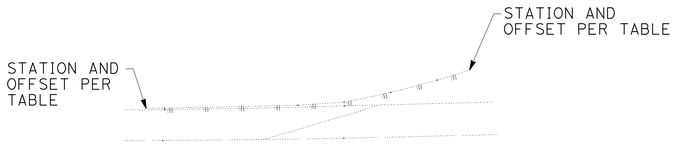

CASE B PLANVIEW

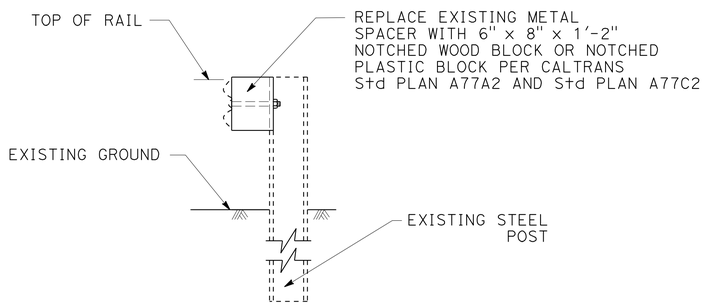

TYPICAL NOTCH BLOCK REPLACEMENT DETAIL

TYPICAL NOTCH BLOCK REPLACEMENT LOCATIONS

STATION 1	TO	STATION 2	LINE	OFFSET 1	OFFSET 2	DIRECTION	CASE
2052+12.17	TO	2068+00.55	"241A1"	66.49	66.12	R†	A
2064+92.30	TO	2065+29.61	"241A1"	66.03	65.84	L†	A
2077+50.47	TO	2086+99.46	"241A1"	87.55	78.34	L†	A
2086+61.66	TO	2086+67.91	"241A1"	77.96	77.96	R†	A
2088+50.40	TO	2088+56.95	"241A1"	77.94	78.00	L†	A

TYPICAL NOTCH BLOCK REPLACEMENT LOCATIONS

STATION 1	TO	STATION 2	LINE	OFFSET 1	OFFSET 2	DIRECTION	CASE
2090+68.25	TO	2103+38.93	"241A1"	78.26	77.91	L†	A
2095+44.48	TO	2096+11.18	"241A1"	86.12	78.04	R†	B
2105+75.48	TO	2111+30.24	"241A1"	77.75	78.10	L†	A
2105+79.87	TO	2109+22.57	"241A1"	89.27	78.25	R†	B
2113+98.62	TO	2115+08.29	"241A1"	91.81	78.66	R†	B
2129+00.09	TO	2131+12.55	"241A1"	78.23	78.22	L†	A
2137+25.18	TO	2138+87.56	"241A1"	78.01	78.13	L†	A
2143+09.24	TO	2144+07.77	"241A1"	98.13	88.48	R†	B
2146+96.55	TO	2148+44.89	"241A1"	89.28	89.70	R†	A
2147+82.94	TO	2152+83.24	"241A1"	93.09	124.42	L†	A
2154+01.78	TO	2154+68.61	"241A1"	94.43	94.91	R†	A
2157+45.43	TO	2158+07.64	"241A1"	170.86	187.48	L†	B
2159+47.01	TO	2163+34.44	"241A1"	139.74	211.92	R†	A
2175+74.57	TO	2176+34.60	"241A1"	148.47	145.08	R†	A
2175+81.35	TO	2176+29.11	"241A1"	184.69	184.80	R†	A
2176+82.00	TO	2177+84.43	"241A1"	101.10	106.56	L†	A
2176+82.22	TO	2177+84.73	"241A1"	114.30	108.93	L†	A
2186+91.03	TO	2187+29.55	"241A1"	101.89	101.97	L†	A
2192+31.36	TO	2192+56.05	"241A1"	103.54	104.00	R†	A
2196+87.69	TO	2197+25.29	"241A1"	101.60	101.56	L†	A
2206+18.32	TO	2206+55.71	"241A1"	112.13	115.18	R†	A
2209+10.85	TO	2209+30.90	"241A1"	594.01	646.07	L†	A
2209+16.86	TO	2209+34.12	"241A1"	540.52	645.31	L†	A
2209+65.05	TO	2209+68.38	"241A1"	573.34	598.49	L†	A
2213+67.35	TO	2214+04.58	"241A1"	186.97	189.47	R†	A
2213+70.75	TO	2217+44.22	"241A1"	140.10	170.54	R†	A
2218+92.86	TO	2219+30.33	"241A1"	103.74	102.61	L†	A
2242+19.25	TO	2246+98.57	"241A1"	113.96	114.65	R†	A
2242+31.48	TO	2245+85.08	"241A1"	102.19	102.23	L†	A
2280+68.84	TO	2281+06.80	"241A1"	113.72	113.70	R†	A
2297+09.03	TO	2299+96.23	"241A1"	144.87	169.03	R†	A
2300+61.98	TO	2301+73.97	"241A1"	214.62	216.79	L†	A
2304+13.57	TO	2305+25.49	"241A1"	172.76	165.50	L†	A
2308+96.61	TO	2316+50.17	"241A1"	196.10	122.82	L†	A
2315+86.12	TO	2316+17.58	"241A1"	146.73	144.07	R†	A
2345+33.95	TO	2345+72.16	"241A1"	89.51	89.68	L†	A
2345+94.43	TO	2346+12.29	"241A1"	102.04	101.86	R†	B
2359+00.34	TO	2361+29.58	"241A1"	89.73	95.03	L†	A
2372+86.77	TO	2373+13.50	"241A1"	102.11	102.93	R†	A
2391+70.90	TO	2391+97.18	"241A1"	244.27	246.03	R†	A
2391+74.73	TO	2392+00.49	"241A1"	189.53	190.99	R†	A
2410+02.18	TO	2410+64.44	"241A1"	91.22	90.31	L†	A
2414+84.90	TO	2417+23.37	"241A1"	100.23	100.03	R†	A
2442+40.11	TO	2444+21.15	"241A1"	102.11	102.16	L†	A
2446+91.24	TO	2452+19.75	"241A1"	101.46	99.76	L†	A
2465+62.36	TO	2468+38.86	"241A1"	156.38	159.15	L†	A
2471+09.89	TO	2476+71.43	"241A1"	164.89	250.59	L†	A
2474+99.99	TO	2475+24.93	"241A1"	234.71	234.58	R†	A
2476+78.55	TO	2477+15.64	"241A1"	89.93	89.63	R†	A
2479+77.17	TO	2482+43.81	"241A1"	235.82	182.39	R†	A

Dist	COUNTY	ROUTE	POST MILES TOTAL PROJECT	SHEET No.	TOTAL SHEETS
12	Ora	241	15.5/39.0	5	117

Lindsay M. Kaufmann 09/01/10
REGISTERED CIVIL ENGINEER DATE

10-18-10
PLANS APPROVAL DATE

REGISTERED PROFESSIONAL ENGINEER LINDSAY M. KAUFMANN No. C71806 Exp. 12/31/11 CIVIL STATE OF CALIFORNIA

THE STATE OF CALIFORNIA OR ITS OFFICERS OR AGENTS SHALL NOT BE RESPONSIBLE FOR THE ACCURACY OR COMPLETENESS OF SCANNED COPIES OF THIS PLAN SHEET.

RBF CONSULTING
14725 ALTON PKWY
IRVINE, CA. 92618-2027

NOTES:

1. FOR LOCATION WITHIN THE PROJECT LIMITS SEE KEY MAP K-1 TO K-3
2. INSTALL GUARD RAILING DELINEATORS AT THE BEGINNING, THE END AND AT 25 Ft INCREMENTS OF EACH MBGR SECTION PER CALTRANS Std PLAN A77C4 AND A73C. TYPE AND QUANTITY ARE LOCATED ON QUANTITY SHEETS Q-20 TO Q-24.

CONSTRUCTION DETAILS
(NOTCH BLOCK REPLACEMENT)

NO SCALE

C-1

		RK/WT	07/22/10
		REVISED BY	DATE REVISED
19-OCT-2010 13:32		LINDSAY KAUFMANN	LINDSAY KAUFMANN
trlenard	CALCULATED-DESIGNED BY		CHECKED BY
	CONSULTANT FUNCTIONAL SUPERVISOR	MIKE CHESNEY	

STATE OF CALIFORNIA - DEPARTMENT OF TRANSPORTATION

Caltrans

H:\pdata\10106739\CADD\TransPW\Div\Merge\8-24-10\c0G370ga001.dgn

LAST REVISION 06-08-10 | DATE PLOTTED => 19-OCT-2010 | TIME PLOTTED => 13:32

Dist	COUNTY	ROUTE	POST MILES TOTAL PROJECT	SHEET No.	TOTAL SHEETS
12	Ora	241	15.5/39.0	6	117

Lindsay M. Kaufmann 09/01/10
REGISTERED CIVIL ENGINEER DATE

10-18-10
PLANS APPROVAL DATE

REGISTERED PROFESSIONAL ENGINEER LINDSAY M. KAUFMANN No. C71806 Exp.12/31/11 CIVIL STATE OF CALIFORNIA

THE STATE OF CALIFORNIA OR ITS OFFICERS OR AGENTS SHALL NOT BE RESPONSIBLE FOR THE ACCURACY OR COMPLETENESS OF SCANNED COPIES OF THIS PLAN SHEET.

RBF CONSULTING
14725 ALTON PKWY
IRVINE, CA. 92618-2027

TYPICAL NOTCH BLOCK REPLACEMENT LOCATIONS

STATION 1	TO	STATION 2	LINE	OFFSET 1	OFFSET 2	DIRECTION	CASE
2481+73.87	TO	2481+98.55	"241A1"	218.04	213.83	L+	A
2485+23.14	TO	2485+53.42	"241A1"	117.13	114.63	R+	A
2485+28.95	TO	2485+59.21	"241A1"	89.50	89.45	R+	A
2485+49.27	TO	2485+55.17	"241A1"	139.81	139.15	R+	A
2488+25.65	TO	2489+96.93	"241A1"	143.83	129.46	L+	A
2509+14.99	TO	2511+27.07	"241A1"	90.45	90.08	L+	A
2509+86.89	TO	2511+61.62	"241A1"	90.48	90.24	R+	A
2518+53.52	TO	2523+90.80	"241A1"	90.37	90.04	L+	A
2527+78.41	TO	2529+40.82	"241A1"	90.12	90.05	L+	A
2537+07.08	TO	2537+56.98	"241A1"	90.42	90.23	R+	A
2537+78.97	TO	2538+16.24	"241A1"	97.80	98.60	L+	A
2542+16.15	TO	2544+64.93	"241A1"	124.74	154.49	R+	A
2547+23.82	TO	2553+14.81	"241A1"	176.69	277.57	L+	A
2548+59.07	TO	2548+96.46	"241A1"	136.89	137.77	R+	A
2556+11.18	TO	2556+49.74	"241A1"	281.49	287.28	L+	A
2557+28.41	TO	2558+10.36	"241A1"	105.02	94.65	R+	B
2562+96.59	TO	2563+83.80	"241NP2"	21.39	19.39	R+	A
2568+71.37	TO	2569+70.84	"241A1"	102.10	102.34	R+	A
2576+54.55	TO	2576+92.02	"241NP2"	8.63	8.62	R+	A
2592+07.77	TO	2593+56.28	"241A1"	102.03	110.24	L+	B
2596+02.41	TO	2596+94.90	"241A1"	85.43	78.46	R+	B
2613+63.88	TO	2614+01.35	"241A1"	78.60	78.60	L+	A
2620+46.62	TO	270+84.64	"241A1"/"241NB1"	102.15	69.96	R+	A
2621+48.72	TO	273+30.43	"241SBTOLL2"/"241SB1"	73.34	71.55	L+	A
277+06.01	TO	277+44.18	"241NB1"	70.24	70.75	R+	A
279+19.05	TO	282+54.02	"241SB1"	69.78	78.67	L+	B
288+47.08	TO	288+84.46	"241SB1"	6.91	6.86	L+	A
87+39.31	TO	93+70.21	"241WS133"	5.13	5.63	L+	A
288+41.51	TO	89+22.34	"241SB1"/"133NE241"	73.60	41.04	L+	B
94+08.36	TO	99+43.93	"133NE241"	34.69	34.46	L+	A
97+01.16	TO	99+67.32	"133NE241"	4.25	4.76	R+	A
305+72.61	TO	307+49.85	"241NB1"	46.55	46.56	R+	A
105+65.09	TO	110+16.44	"241WS133"	34.45	38.91	R+	A
305+87.56	TO	311+97.37	"241SB1"	46.12	52.37	L+	B
314+51.57	TO	317+35.32	"241SB1"	45.43	45.95	L+	A
68+37.76	TO	69+39.89	"241S133"	34.12	42.41	L+	B
327+91.12	TO	329+95.08	"241NB1"	46.43	46.44	R+	A
71+10.96	TO	347+18.07	"241S133"/"241SB1"	34.86	56.31	L+	A
9334+56.97	TO	352+36.07	"133N241"/"241B1"	45.34	70.42	R+	B
334+32.90	TO	334+70.40	"241SB1"	3.05	2.31	L+	A
374+85.19	TO	375+55.73	"241B1"	67.64	58.39	R+	B
382+11.60	TO	382+49.16	"241B1"	33.55	33.77	L+	A
382+90.64	TO	393+98.79	"241B1"	58.41	58.21	R+	A
396+39.43	TO	396+45.03	"241B1"	40.60	41.22	L+	A
398+23.40	TO	402+54.93	"241B1"	57.89	59.12	R+	A
418+36.28	TO	430+04.25	"241B1"	70.30	70.10	R+	A
435+92.05	TO	436+29.97	"241B1"	22.38	22.16	L+	A
438+07.07	TO	447+83.23	"241B1"	69.91	70.46	R+	A
496+37.50	TO	504+06.25	"241B1"	58.89	62.73	R+	A
504+92.02	TO	516+01.02	"241B1"	63.13	51.58	R+	A

TYPICAL NOTCH BLOCK REPLACEMENT LOCATIONS

STATION 1	TO	STATION 2	LINE	OFFSET 1	OFFSET 2	DIRECTION	CASE
519+03.46	TO	519+40.16	"241B1"	62.12	61.14	R+	A
529+81.04	TO	535+09.84	"241A2"	55.00	23.99	R+	A
557+93.30	TO	558+30.70	"241A2"	30.79	33.28	R+	A
568+04.75	TO	1572+16.39	"241A2"/"241NBR1"	141.44	163.77	R+	A
2576+00.28	TO	2581+61.81	"241SBR1"	70.18	79.01	L+	A
1589+39.28	TO	1591+16.91	"241NBR1"	46.17	46.60	R+	A
2584+87.70	TO	2593+61.19	"241SBR1"	101.03	334.80	L+	A
2592+41.42	TO	2593+92.29	"241SBR1"	122.54	160.77	L+	A
2593+45.73	TO	2594+50.60	"241SBR1"	46.49	46.39	L+	A
30+48.30	TO	31+20.20	"241CH8"	98.14	34.26	R+	A
37+83.00	TO	41+86.40	"241CH8"	34.22	31.52	R+	A
37+83.65	TO	47+46.22	"241CH8"	5.49	3.96	L+	A
1597+72.40	TO	1599+18.22	"241NBR1"	46.35	46.76	R+	A
2598+96.97	TO	2604+63.70	"241SBR1"	46.22	45.88	L+	A
1603+83.06	TO	1607+51.20	"241NBR1"	110.65	46.12	R+	A
34+95.69	TO	46+57.82	"241CH7"	46.29	34.13	L+	A
35+08.72	TO	39+49.49	"241CH7"	16.77	4.36	R+	A
610+61.66	TO	614+00.05	"241CH7"	58.27	31.47	L+	A
2626+21.53	TO	2626+59.23	"241SBR1"	58.06	57.97	L+	A
2812+63.52	TO	2813+50.97	"261B241"	120.36	120.50	R+	A
2818+08.14	TO	2818+91.38	"261B241"	120.07	144.54	R+	A
2819+24.84	TO	2826+49.76	"261B241"	120.09	112.13	R+	A
2834+91.34	TO	2835+28.95	"261B241"	108.47	108.30	L+	A
652+84.08	TO	654+77.17	"241A3"	113.87	113.90	R+	A
653+74.22	TO	665+10.65	"241A3"	115.52	102.20	L+	A
668+28.39	TO	672+39.34	"241A3"	119.94	115.20	R+	A
668+56.41	TO	670+29.86	"241A3"	102.31	100.74	L+	A
677+53.71	TO	693+02.49	"241A3"	117.76	124.40	R+	A
686+03.89	TO	713+59.37	"241A3"	91.78	90.11	L+	A
698+70.74	TO	713+47.11	"241A3"	124.48	124.08	R+	A
716+77.92	TO	734+57.77	"241A3"	124.72	124.76	R+	A
716+94.62	TO	756+04.30	"241A3"	89.82	92.94	L+	A
738+35.34	TO	739+07.87	"241A3"	132.33	127.23	R+	B
742+62.04	TO	756+10.46	"241A3"	124.06	123.98	R+	A
759+02.16	TO	772+91.49	"241A3"/"241NBTOLL1"	124.49	62.58	R+	A
773+91.66	TO	776+93.38	"241SBTOLL1"	76.85	99.60	L+	A
780+27.88	TO	780+65.09	"241A3"	100.55	100.72	R+	A
782+26.53	TO	782+64.25	"241A3"	77.22	77.50	L+	A
813+03.06	TO	815+28.19	"241A3"	101.79	102.10	L+	A
814+49.31	TO	814+91.31	"241A3"	130.97	125.18	R+	B
817+44.45	TO	852+07.15	"241A3"	124.45	112.89	R+	A
817+72.25	TO	821+16.52	"241A3"	102.10	109.11	L+	B
824+66.47	TO	833+38.25	"241A3"	101.57	101.41	L+	A
844+08.04	TO	851+19.18	"241A3"	101.51	101.68	L+	A
852+21.96	TO	857+07.76	"241A3"	143.97	114.96	R+	A
863+45.26	TO	895+29.21	"241A3"	111.24	124.28	R+	A
865+53.79	TO	887+61.65	"241A3"	101.93	109.78	L+	A
895+35.90	TO	3901+23.52	"241A3"/"241NW91"	146.03	58.02	R+	A
5900+96.64	TO	4911+44.68	"91WS241"/"91ES241"	69.53	33.95	L+	A
6909+01.76	TO	6914+50.76	"241NE91"	34.75	34.67	R+	A

NOTES:

1. FOR LOCATION WITHIN THE PROJECT LIMITS SEE KEY MAP K-1 TO K-3
2. INSTALL GUARD RAILING DELINEATORS AT THE BEGINNING, THE END AND AT 25 F+ INCREMENTS OF EACH MBGR SECTION PER CALTRANS Std PLAN A77C4 AND A73C. TYPE AND QUANTITY ARE LOCATED ON QUANTITY SHEETS Q-20 TO Q-24.

CONSTRUCTION DETAILS
(NOTCH BLOCK REPLACEMENT)

NO SCALE

C-2

REVISED BY	DATE REVISED
RK/WT	07/22/10

CALCULATED-DESIGNED BY: LINDSAY KAUFMANN
CHECKED BY: LINDSAY KAUFMANN
SUPERVISOR: MIKE CHESNEY
CONSULTANT FUNCTIONAL

STATE OF CALIFORNIA - DEPARTMENT OF TRANSPORTATION
Caltrans

H:\pdata\10106739\CADD\TransPW\Div\Merge\8-24-10\c0G370ga002.dgn trlenard 19-OCT-2010 13:32

LAST REVISION 06-08-10 | DATE PLOTTED => 19-OCT-2010 | TIME PLOTTED => 13:32

Dist	COUNTY	ROUTE	POST MILES TOTAL PROJECT	SHEET No.	TOTAL SHEETS
12	Ora	241	15.5/39.0	7	117

Lindsay M. Kaufmann 09/01/10
REGISTERED CIVIL ENGINEER DATE

10-18-10
PLANS APPROVAL DATE

REGISTERED PROFESSIONAL ENGINEER
LINDSAY M. KAUFMANN
No. C71806
Exp. 12/31/11
CIVIL
STATE OF CALIFORNIA

THE STATE OF CALIFORNIA OR ITS OFFICERS OR AGENTS SHALL NOT BE RESPONSIBLE FOR THE ACCURACY OR COMPLETENESS OF SCANNED COPIES OF THIS PLAN SHEET.

RBF CONSULTING
14725 ALTON PKWY
IRVINE, CA. 92618-2027

TYPICAL NOTCH BLOCK REPLACEMENT LOCATIONS

STATION 1	TO	STATION 2	LINE	OFFSET 1	OFFSET 2	DIRECTION	CASE
3909+07.89	TO	3918+18.84	"241NW91"	10.07	5.47	L†	A
4912+32.06	TO	4918+68.56	"91ES241"	33.84	33.88	L†	A
4919+43.35	TO	4924+01.26	"91ES241"	33.95	34.18	L†	A
4920+04.35	TO	4933+74.06	"91ES241"	5.15	5.11	R†	A
4928+49.47	TO	4930+02.66	"91ES241"	34.28	34.11	L†	A
5913+90.20	TO	5920+92.58	"91WS241"	9.25	5.58	R†	A
5919+24.12	TO	5921+20.54	"91WS241"	46.52	46.34	L†	A
5923+72.74	TO	5930+55.96	"91WS241"	5.37	5.48	R†	A
5923+99.70	TO	5930+30.00	"91WS241"	45.14	34.44	L†	A
3923+29.25	TO	3927+79.23	"241NW91"	5.26	4.98	L†	A
3924+51.72	TO	3930+71.65	"241NW91"	33.78	33.70	R†	A
6918+27.12	TO	6919+80.92	"241NE91"	15.01	8.83	L†	B

NOTES:

1. FOR LOCATION WITHIN THE PROJECT LIMITS SEE KEY MAP K-1 TO K-3
2. INSTALL GUARD RAILING DELINEATORS AT THE BEGINNING, THE END AND AT 25 F† INCREMENTS OF EACH MBGR SECTION PER CALTRANS Std PLAN A77C4 AND A73C. TYPE AND QUANTITY ARE LOCATED ON QUANTITY SHEETS Q-20 TO Q-24.

CONSTRUCTION DETAILS
(NOTCH BLOCK REPLACEMENT)

NO SCALE

C-3

REVISED BY	DATE REVISED
RK/WT	07/22/10

LINDSAY KAUFMANN	LINDSAY KAUFMANN
CALCULATED-DESIGNED BY	CHECKED BY
CONSULTANT FUNCTIONAL SUPERVISOR	MIKE CHESNEY

STATE OF CALIFORNIA - DEPARTMENT OF TRANSPORTATION
Caltrans

H:\pdata\10106739\CADD\TransPW\Div\Merge\8-24-10\c0G370ga003.dgn trlenard 19-OCT-2010 13:32

LAST REVISION 06-08-10 | DATE PLOTTED => 19-OCT-2010 | TIME PLOTTED => 13:32

Dist	COUNTY	ROUTE	POST MILES TOTAL PROJECT	SHEET No.	TOTAL SHEETS
12	Ora	241	15.5/39.0	8	117

Lindsay M. Kaufmann 09/01/10
REGISTERED CIVIL ENGINEER DATE

10-18-10
PLANS APPROVAL DATE

REGISTERED PROFESSIONAL ENGINEER LINDSAY M. KAUFMANN No. C71806 Exp. 12/31/11 CIVIL STATE OF CALIFORNIA

THE STATE OF CALIFORNIA OR ITS OFFICERS OR AGENTS SHALL NOT BE RESPONSIBLE FOR THE ACCURACY OR COMPLETENESS OF SCANNED COPIES OF THIS PLAN SHEET.

RBF CONSULTING
14725 ALTON PKWY
IRVINE, CA. 92618-2027

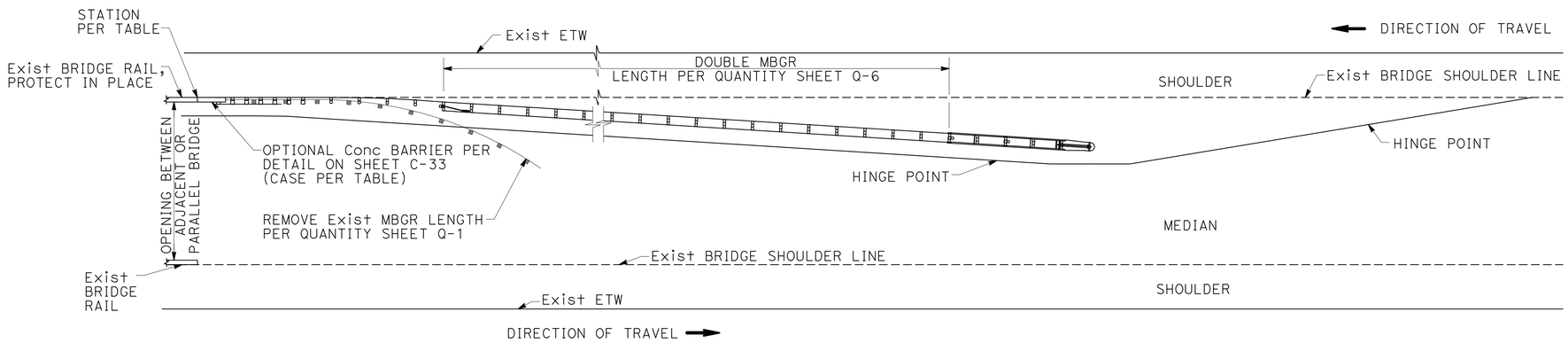

NOTES:

1. FOR LOCATION WITHIN THE PROJECT LIMITS SEE KEY MAP K-1 TO K-3
2. SEE CALTRANS Std PLAN A77F3 FOR ALL CONSTRUCTION DETAILS INCLUDING SLOPE GRADING & OFFSETS
3. INSTALL GUARD RAILING DELINEATORS AT THE BEGINNING, THE END AND AT 25 Ft INCREMENTS OF EACH MBGR SECTION PER CALTRANS Std PLAN A77C4 AND A73C. TYPE AND QUANTITY ARE LOCATED ON QUANTITY SHEETS Q-20 TO Q-24.

MBGR LAYOUT 12E
PER CALTRANS Std PLAN A77F3

STATION	LINE	BRIDGE No.	DIRECTION	CONCRETE BARRIER	CASE
2086+95.93	"241A1"	550996R	Rt	YES	A
2088+21.98	"241A1"	550996L	Lt	YES	A
2154+51.50	"241A1"	550715R	Rt	YES	A
2157+41.94	"241A1"	550715K	Lt	YES	A
2158+08.08	"241A1"	550715L	Lt	YES	A
2260+00.64	"241A1"	550701R	Rt	NO	
2262+15.64	"241A1"	550701L	Lt	NO	
2316+50.52	"241A1"	550703R	Rt	YES	A
2332+50.11	"241A1"	550703L	Lt	YES	A
2346+69.73	"241A1"	550704R	Rt	YES	A
2358+42.16	"241A1"	550704L	Lt	YES	A
2485+87.19	"241A1"	550709R	Rt	YES	A
2487+85.45	"241A1"	550709L	Lt	YES	A
655+09.39	"241A3"	550823R	Rt	YES	A
668+28.39	"241A3"	550823L	Lt	YES	A
713+53.01	"241A3"	550786R	Rt	YES	A
756+34.20	"241A3"	550787R	Rt	YES	A
817+51.42	"241A3"	550724L	Lt	YES	A
3931+00.75	"241NW91"	55710G	Lt	YES	A

CONSTRUCTION DETAILS
(MBGR LAYOUT 12E)
NO SCALE

C-4

REVISED BY	DATE REVISED
RK/WT	07/22/10

LINDSAY KAUFMANN — LINDSAY KAUFMANN — CALCULATED-DESIGNED BY — CHECKED BY
MIKE CHESNEY — CONSULTANT FUNCTIONAL SUPERVISOR
STATE OF CALIFORNIA - DEPARTMENT OF TRANSPORTATION — Caltrans

H:\pdata\10106739\CADD\TransPW\Div\Merge\8-24-10\c0G370ga004.dgn trlenard 19-OCT-2010 13:33

LAST REVISION 06-08-10 | DATE PLOTTED => 19-OCT-2010 | TIME PLOTTED => 13:33

BORDER LAST REVISED 7/2/2010 | USERNAME => trlenard | DGN FILE => c0G370ga004.dgn | RELATIVE BORDER SCALE IS IN INCHES 0 1 2 3 | UNIT 2998 | PROJECT NUMBER & PHASE 12000001431

Dist	COUNTY	ROUTE	POST MILES TOTAL PROJECT	SHEET No.	TOTAL SHEETS
12	Ora	241	15.5/39.0	9	117

Lindsay M. Kaufmann 09/01/10
REGISTERED CIVIL ENGINEER DATE

10-18-10
PLANS APPROVAL DATE

REGISTERED PROFESSIONAL ENGINEER LINDSAY M. KAUFMANN No. C71806 Exp. 12/31/11 CIVIL STATE OF CALIFORNIA

THE STATE OF CALIFORNIA OR ITS OFFICERS OR AGENTS SHALL NOT BE RESPONSIBLE FOR THE ACCURACY OR COMPLETENESS OF SCANNED COPIES OF THIS PLAN SHEET.

RBF CONSULTING
14725 ALTON PKWY
IRVINE, CA. 92618-2027

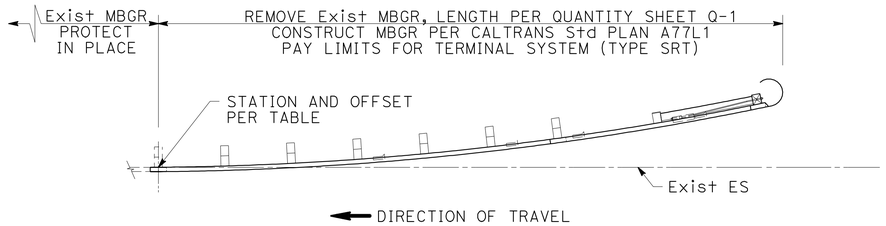

MBGR TERMINAL SYSTEM (TYPE SRT) PER CALTRANS Std PLAN A77E1 & A77L1

MBGR TERMINAL SYSTEM (TYPE SRT)

STATION	LINE	OFFSET	DIRECTION
2175+74.57	"241A1"	148.47	R†
2175+81.35	"241A1"	184.69	R†
2187+29.55	"241A1"	101.97	L†
2197+25.29	"241A1"	101.56	L†
2206+18.32	"241A1"	112.13	R†
2209+65.05	"241A1"	573.39	L†
2213+67.35	"241A1"	186.97	R†
2219+30.33	"241A1"	102.61	L†
2245+85.08	"241A1"	102.23	L†
2280+68.84	"241A1"	113.72	R†
2297+09.03	"241A1"	144.87	R†
2301+73.97	"241A1"	216.79	L†
2361+29.58	"241A1"	95.03	L†
2372+86.77	"241A1"	102.11	R†
2391+74.73	"241A1"	189.53	R†
2397+13.20	"241A1"	90.47	L†
2410+64.44	"241A1"	90.31	L†
2414+84.90	"241A1"	100.23	R†
2419+39.60	"241A1"	100.03	R†
2428+97.85	"241A1"	89.91	L†
2452+19.75	"241A1"	99.76	L†
2468+38.86	"241A1"	159.15	L†
2476+71.43	"241A1"	250.59	L†
2479+77.17	"241A1"	235.82	R†
2481+98.55	"241A1"	213.83	L†
2485+23.14	"241A1"	117.13	R†
2485+28.95	"241A1"	89.50	R†
2485+49.27	"241A1"	139.81	R†
2529+40.82	"241A1"	90.05	L†
2538+16.24	"241A1"	98.47	L†
2542+16.15	"241A1"	124.74	R†
2553+14.81	"241A1"	277.57	L†
280+51.47	"241SB1"	2.37	L†
31+41.35	"241CH8"	5.43	L†
758+87.39	"241A3"	100.64	L†

NOTES:

1. FOR LOCATION WITHIN THE PROJECT LIMITS SEE KEY MAP K-1 TO K-3
2. SEE CALTRANS Std PLAN A77E1 & A77L1 FOR ALL CONSTRUCTION DETAILS INCLUDING SLOPE GRADING & OFFSETS
3. INSTALL GUARD RAILING DELINEATORS AT THE BEGINNING, THE END AND AT 25 F† INCREMENTS OF EACH MBGR SECTION PER CALTRANS Std PLAN A77C4 AND A73C. TYPE AND QUANTITY ARE LOCATED ON QUANTITY SHEETS Q-20 TO Q-24.

CONSTRUCTION DETAILS
(TERMINAL SYSTEM UPGRADE)

NO SCALE

C-5

LAST REVISION 06-08-10 | DATE PLOTTED => 19-OCT-2010 | TIME PLOTTED => 13:33

STATE OF CALIFORNIA - DEPARTMENT OF TRANSPORTATION
Caltrans
CONSULTANT FUNCTIONAL SUPERVISOR: MIKE CHESNEY
CALCULATED-DESIGNED BY: LINDSAY KAUFMANN
CHECKED BY: LINDSAY KAUFMANN
REVISED BY: RK/WT
DATE REVISED: 07/22/10

H:\pdata\10106739\CADD\TransPW\Div\Merge\8-24-10\c0G370ga005.dgn trlenard 19-OCT-2010 13:33

Dist	COUNTY	ROUTE	POST MILES TOTAL PROJECT	SHEET No.	TOTAL SHEETS
12	Ora	241	15.5/39.0	10	117

Lindsay M. Kaufmann 09/01/10
REGISTERED CIVIL ENGINEER DATE

10-18-10
PLANS APPROVAL DATE

REGISTERED PROFESSIONAL ENGINEER LINDSAY M. KAUFMANN No. C71806 Exp. 12/31/11 CIVIL STATE OF CALIFORNIA

THE STATE OF CALIFORNIA OR ITS OFFICERS OR AGENTS SHALL NOT BE RESPONSIBLE FOR THE ACCURACY OR COMPLETENESS OF SCANNED COPIES OF THIS PLAN SHEET.

RBF CONSULTING
14725 ALTON PKWY
IRVINE, CA. 92618-2027

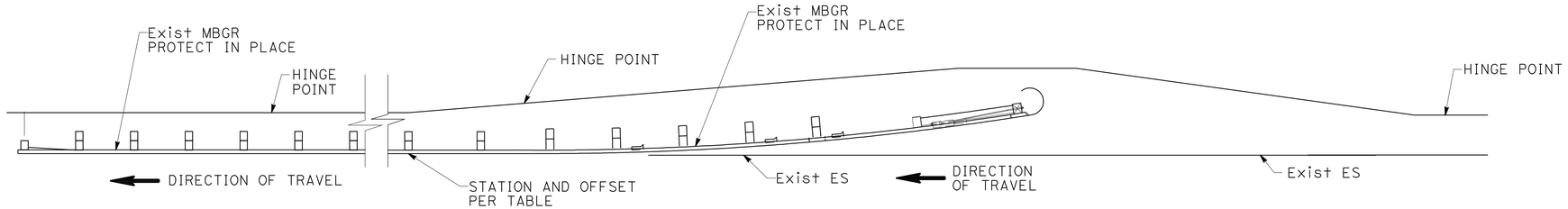

MBGR TYPICAL GRADING DETAIL
PER CALTRANS Std PLAN A77E1

NOTES:

1. FOR LOCATION WITHIN THE PROJECT LIMITS SEE KEY MAP K-1 TO K-3
2. SEE CALTRANS Std PLAN A77E1 FOR ALL CONSTRUCTION DETAILS INCLUDING SLOPE GRADING & OFFSETS

MBGR TYPICAL GRADING DETAIL

STATION	LINE	OFFSET	DIRECTION
2125+80.85	"241A1"	78.56	R†
2562+96.59	"241NP2"	21.39	R†
418+36.28	"241B1"	70.30	R†
482+92.77	"241B1"	62.44	R†
2626+59.23	"241SBR1"	57.97	L†
2818+08.14	"261B241"	120.07	R†
2819+24.84	"261B241"	120.09	R†
2835+28.95	"261B241"	108.30	L†

CONSTRUCTION DETAILS
(GRADING DETAIL)
NO SCALE

C-6

REVISED BY	DATE REVISED
RK/WT	07/22/10

LINDSAY KAUFMANN 19-OCT-2010 13:33
LINDSAY KAUFMANN
CALCULATED-DESIGNED BY
CHECKED BY
MIKE CHESNEY
CONSULTANT FUNCTIONAL SUPERVISOR
trlenard
H:\pdata\10106739\CADD\TransPW\Div\Merge\8-24-10\c0G370ga006.dgn

STATE OF CALIFORNIA - DEPARTMENT OF TRANSPORTATION
Caltrans

LAST REVISION 06-08-10 | DATE PLOTTED => 19-OCT-2010 | TIME PLOTTED => 13:33

Dist	COUNTY	ROUTE	POST MILES TOTAL PROJECT	SHEET No.	TOTAL SHEETS
12	Ora	241	15.5/39.0	11	117

Lindsay M. Kaufmann 09/01/10
REGISTERED CIVIL ENGINEER DATE

10-18-10
PLANS APPROVAL DATE

REGISTERED PROFESSIONAL ENGINEER LINDSAY M. KAUFMANN No. C71806 Exp. 12/31/11 CIVIL STATE OF CALIFORNIA

THE STATE OF CALIFORNIA OR ITS OFFICERS OR AGENTS SHALL NOT BE RESPONSIBLE FOR THE ACCURACY OR COMPLETENESS OF SCANNED COPIES OF THIS PLAN SHEET.

RBF CONSULTING
14725 ALTON PKWY
IRVINE, CA. 92618-2027

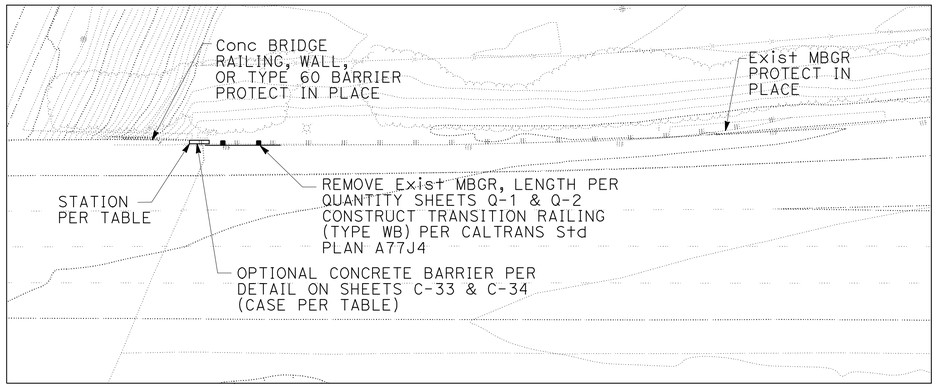

MBGR TRANSITION RAILING (TYPE WB) UPGRADE DETAIL

MBGR TRANSITION RAILING (TYPE WB) UPGRADE

STATION	LINE	BRIDGE No.	DIRECTION	CONCRETE BARRIER	CASE
2086+98.03	"241A1"	550996R	R+	YES	A
2088+20.27	"241A1"	550996L	L+	YES	A
2154+98.01	"241A1"	550715R	R+	YES	A
2157+13.63	"241A1"	550715K	L+	YES	A
2227+36.36	"241A1"	550700R	R+	NO	
2241+93.15	"241A1"	550700L	L+	NO	
2242+00.30	"241A1"	550700L	L+	YES	A
2260+06.95	"241A1"	550701R	R+	YES	A
2262+24.21	"241A1"	550701L	L+	YES	A
2316+48.35	"241A1"	550703R	R+	YES	A
2346+41.81	"241A1"	550704R	R+	YES	A
2358+69.67	"241A1"	550704L	L+	YES	A
2393+11.93	"241A1"	550705	R+	YES	A
2396+83.07	"241A1"	550705	L+	YES	A
2419+69.72	"241A1"	550712	R+	YES	A
2422+21.29	"241A1"	550712	L+	YES	B
2426+76.58	"241A1"	550706R	R+	YES	A
2428+67.73	"241A1"	550706	L+	YES	A
2443+38.33	"241A1"	550707	R+	YES	A
2446+61.11	"241A1"	550707	L+	YES	A
2485+82.75	"241A1"	550709S	R+	YES	A
2485+84.39	"241A1"	550709S	R+	YES	A
2485+88.81	"241A1"	550709R	R+	YES	A
2487+94.70	"241A1"	550709K	L+	YES	B
280+21.38	"241SB1"		L+	YES	D
94+00.33	"241WS133"	550782G	L+	YES	A
110+45.54	"241WS133"	550780G	R+	YES	C
394+28.91	"241B1"	550895R	R+	YES	A
396+09.11	"241B1"	550895R	L+	YES	A
31+50.33	"241CH8"	550803	R+	YES	A
31+71.46	"241CH8"	550803	L+	YES	A
655+07.29	"241A3"	550823R	R+	YES	A
668+26.29	"241A3"	550823L	L+	YES	A
713+44.90	"241A3"	550786R	R+	YES	A
716+65.02	"241A3"	550786L	L+	YES	A
756+40.21	"241A3"	550787R	R+	YES	A
758+56.95	"241A3"	550787L	L+	YES	A
815+21.21	"241A3"	550724R	R+	YES	A
817+42.13	"241A3"	550724L	L+	YES	A
5923+42.57	"91WS241"	550941F	R+	YES	A
5923+70.02	"91WS241"	550941F	L+	YES	A
3931+01.31	"241NW91"	550790G	R+	YES	A
6931+03.44	"241NE91"	550791G	R+	YES	A

NOTES:

1. FOR LOCATION WITHIN THE PROJECT LIMITS SEE KEY MAP K-1 TO K-3
2. INSTALL GUARD RAILING DELINEATORS AT THE BEGINNING, THE END AND AT 25 Ft INCREMENTS OF EACH MBGR SECTION PER CALTRANS Std PLAN A77C4 AND A73C. TYPE AND QUANTITY ARE LOCATED ON QUANTITY SHEETS Q-20 TO Q-24.

CONSTRUCTION DETAILS
(TRANSITION RAILING (TYPE WB) UPGRADE)
NO SCALE

C-7

REVISED BY	DATE REVISED
RK/WT	07/22/10

STATE OF CALIFORNIA - DEPARTMENT OF TRANSPORTATION
Caltrans
CONSULTANT FUNCTIONAL SUPERVISOR: MIKE CHESNEY
CALCULATED-DESIGNED BY: LINDSAY KAUFMANN
CHECKED BY: LINDSAY KAUFMANN
LAST REVISION 06-08-10
DATE PLOTTED => 19-OCT-2010
TIME PLOTTED => 13:33

H:\pdata\10106739\CADD\TransPW\Div\Merge\8-24-10\c0G370ga007.dgn trlenard 19-OCT-2010 13:33

Dist	COUNTY	ROUTE	POST MILES TOTAL PROJECT	SHEET No.	TOTAL SHEETS
12	Ora	241	15.5/39.0	12	117

Lindsay M. Kaufmann 09/01/10
REGISTERED CIVIL ENGINEER DATE

10-18-10
PLANS APPROVAL DATE

REGISTERED PROFESSIONAL ENGINEER
LINDSAY M. KAUFMANN
No. C71806
Exp. 12/31/11
CIVIL
STATE OF CALIFORNIA

THE STATE OF CALIFORNIA OR ITS OFFICERS OR AGENTS SHALL NOT BE RESPONSIBLE FOR THE ACCURACY OR COMPLETENESS OF SCANNED COPIES OF THIS PLAN SHEET.

RBF CONSULTING
14725 ALTON PKWY
IRVINE, CA. 92618-2027

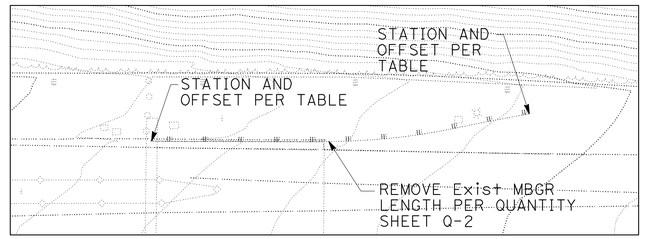

REMOVE MBGR

NOTE:
FOR LOCATION WITHIN THE PROJECT LIMITS SEE KEY MAP K-1 TO K-3

REMOVE MBGR

STATION 1	TO	STATION 2	LINE	DIRECTION	OFFSET 1	OFFSET 2
2176+89.92	TO	2177+81.14	"241A1"	L+	153.30	154.89
2290+57.64	TO	2291+57.41	"241A1"	R+	143.08	144.09
2290+63.70	TO	2291+50.70	"241A1"	R+	186.74	182.81
2298+72.36	TO	2299+71.72	"241A1"	L+	194.81	202.85
2298+78.46	TO	2299+64.82	"241A1"	L+	233.71	245.52
2383+87.04	TO	2385+12.02	"241A1"	R+	189.93	188.81
2384+11.29	TO	2385+24.65	"241A1"	R+	141.70	151.40
2386+92.41	TO	2387+04.70	"241A1"	L+	126.32	128.11
2386+99.04	TO	2387+73.51	"241A1"	L+	164.67	169.93
2458+00.22	TO	2458+60.11	"241A1"	L+	110.91	121.54

CONSTRUCTION DETAILS
(REMOVE MBGR)
NO SCALE

C-8

REVISED BY	RK/WT		
DATE REVISED	07/22/10		
LINDSAY KAUFMANN			
LINDSAY KAUFMANN			
CALCULATED-DESIGNED BY			
CHECKED BY			
CONSULTANT FUNCTIONAL SUPERVISOR			
MIKE CHESNEY			

STATE OF CALIFORNIA - DEPARTMENT OF TRANSPORTATION
Caltrans

H:\pdata\10106739\CADD\TransPW\Div\Merge\8-24-10\c0G370ga008.dgn trlenard 19-OCT-2010 13:33

LAST REVISION 06-08-10 | DATE PLOTTED => 19-OCT-2010 | TIME PLOTTED => 13:33

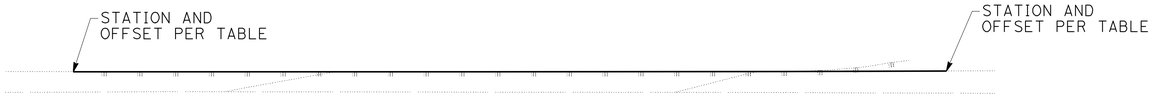

CASE A
REMOVE AC DIKE AND PLACE HMA DIKE (TYPE C & TYPE F) PER CALTRANS Std PLAN A77E1 AND Std PLAN A87B

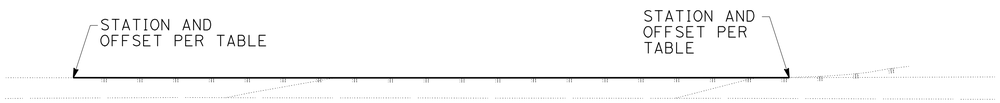

CASE B
REMOVE AC DIKE AND PLACE HMA DIKE (TYPE F) PER CALTRANS Std PLAN A77E1 AND Std PLAN A87B

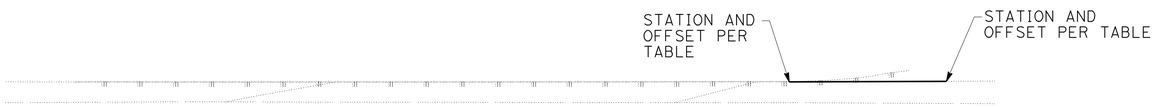

CASE C
REMOVE AC DIKE AND PLACE HMA DIKE (TYPE C) PER CALTRANS Std PLAN A77E1 AND Std PLAN A87B

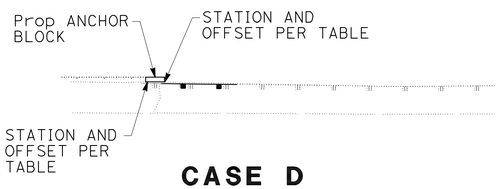

CASE D

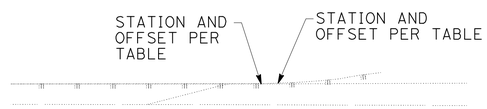

CASE E

REMOVE AC DIKE

DIKE REMOVAL AND PLACEMENT

STATION 1	TO	STATION 2	LINE	OFFSET 1	OFFSET 2	DIRECTION	CASE
2052+12.17	TO	2068+05.55	"241A1"	66.62	66.12	R†	B
2064+87.30	TO	2065+29.55	"241A1"	65.99	65.99	L†	B
2077+45.48	TO	2086+97.87	"241A1"	87.89	78.10	L†	B
2086+49.16	TO	2086+91.78	"241A1"	77.97	78.45	R†	B
2086+91.78	TO	2086+97.80	"241A1"	78.45	78.58	R†	D
2088+20.27	TO	2088+26.52	"241A1"	78.48	77.74	L†	D
2088+26.52	TO	2088+56.95	"241A1"	77.74	77.78	L†	B
2095+90.51	TO	2101+99.85	"241A1"	77.22	77.82	R†	B
2106+37.71	TO	2109+27.64	"241A1"	78.15	77.74	R†	B
2114+70.33	TO	2115+13.35	"241A1"	78.00	78.00	R†	B
2125+80.85	TO	2126+25.17	"241A1"	78.18	78.12	R†	B
2128+95.09	TO	2131+79.80	"241A1"	78.37	78.33	L†	A

Dist	COUNTY	ROUTE	POST MILES TOTAL PROJECT	SHEET No.	TOTAL SHEETS
12	Ora	241	15.5/39.0	13	117

Lindsay M. Kaufmann 09/01/10
REGISTERED CIVIL ENGINEER DATE

10-18-10
PLANS APPROVAL DATE

REGISTERED PROFESSIONAL ENGINEER
LINDSAY M. KAUFMANN
No. C71806
Exp. 12/31/11
CIVIL
STATE OF CALIFORNIA

THE STATE OF CALIFORNIA OR ITS OFFICERS OR AGENTS SHALL NOT BE RESPONSIBLE FOR THE ACCURACY OR COMPLETENESS OF SCANNED COPIES OF THIS PLAN SHEET.

RBF CONSULTING
14725 ALTON PKWY
IRVINE, CA. 92618-2027

NOTES:

1. FOR LOCATION WITHIN THE PROJECT LIMITS SEE KEY MAP K-1 TO K-3
2. SEE CALTRANS Std PLAN A77E1 & A87B FOR ALL CONSTRUCTION DETAILS INCLUDING SLOPE GRADING & OFFSETS

DIKE REMOVAL AND PLACEMENT

STATION 1	TO	STATION 2	LINE	OFFSET 1	OFFSET 2	DIRECTION	CASE
2137+20.18	TO	2138+87.56	"241A1"	78.10	78.17	L†	B
2142+79.24	TO	2143+09.24	"241A1"	88.18	88.29	R†	C
2146+60.07	TO	2148+49.77	"241A1"	88.93	89.77	R†	A
2147+77.81	TO	2152+74.68	"241A1"	92.95	123.75	L†	B
2154+01.78	TO	2154+91.91	"241A1"	94.26	95.73	R†	B
2154+91.91	TO	2154+97.90	"241A1"	95.73	95.86	R†	D
2157+13.63	TO	2157+20.11	"241A1"	166.56	167.41	L†	D
2157+20.11	TO	2157+49.46	"241A1"	167.41	171.46	L†	B
2158+08.87	TO	2158+40.13	"241A1"	178.32	181.97	L†	C
2159+48.86	TO	2163+39.10	"241A1"	139.90	212.81	R†	B
2176+76.86	TO	2178+15.10	"241A1"	90.09	90.03	L†	A
2186+85.89	TO	2187+29.55	"241A1"	101.82	102.19	L†	B
2192+26.36	TO	2192+31.36	"241A1"	103.32	103.39	R†	E
2196+82.69	TO	2197+25.29	"241A1"	101.69	101.62	L†	B
2206+18.32	TO	2206+60.70	"241A1"	111.79	115.31	R†	B
2209+65.04	TO	2209+69.68	"241A1"	573.33	604.01	L†	B
2213+67.35	TO	2214+09.55	"241A1"	186.83	190.01	R†	B
2218+87.86	TO	2219+30.34	"241A1"	103.78	103.00	L†	B
2242+00.29	TO	2242+06.77	"241A1"	102.53	102.50	L†	D
2242+06.77	TO	2246+32.49	"241A1"	102.50	102.07	L†	A
2280+68.84	TO	2281+11.90	"241A1"	113.54	113.51	R†	B
2345+28.86	TO	2345+72.16	"241A1"	89.52	89.58	L†	B
2358+69.67	TO	2358+76.03	"241A1"	89.74	89.71	L†	D
2358+76.03	TO	2361+29.58	"241A1"	89.71	95.03	L†	B
2372+86.77	TO	2373+18.48	"241A1"	102.10	103.07	R†	B
2391+70.90	TO	2392+02.16	"241A1"	244.04	246.14	R†	B
2391+74.34	TO	2392+05.49	"241A1"	190.31	191.26	R†	B
2392+88.06	TO	2393+05.68	"241A1"	89.92	89.87	R†	B
2393+05.68	TO	2393+11.60	"241A1"	89.87	90.55	R†	D
2396+83.07	TO	2396+89.32	"241A1"	90.10	90.13	L†	D
2396+89.32	TO	2397+80.67	"241A1"	90.13	90.60	L†	A
2409+97.18	TO	2410+64.44	"241A1"	91.37	90.83	L†	B
2414+17.61	TO	2417+28.37	"241A1"	100.36	100.09	R†	A
2419+45.86	TO	2419+63.47	"241A1"	100.17	100.18	R†	B
2419+63.47	TO	2419+69.26	"241A1"	100.18	100.19	R†	D
2422+21.29	TO	2422+27.54	"241A1"	90.09	90.09	L†	D
2422+27.54	TO	2426+44.14	"241A1"	90.09	90.00	L†	B
2426+53.25	TO	2426+70.33	"241A1"	90.05	90.11	R†	B
2426+70.33	TO	2426+75.99	"241A1"	90.11	90.40	R†	D

CONSTRUCTION DETAILS
(HMA DIKE REPLACEMENT)

NO SCALE

C-9

REVISED BY	DATE REVISED
RK/WT	07/22/10

CALCULATED-DESIGNED BY: LINDSAY KAUFMANN
CHECKED BY: LINDSAY KAUFMANN
CONSULTANT FUNCTIONAL SUPERVISOR: MIKE CHESNEY

STATE OF CALIFORNIA - DEPARTMENT OF TRANSPORTATION
Caltrans

H:\pdata\10106739\CADD\TransPW\Div\Merge\8-24-10\c06370ga009.dgn 19-OCT-2010 13:33 trlenard

LAST REVISION 06-08-10 | DATE PLOTTED => 19-OCT-2010 | TIME PLOTTED => 13:33

Dist	COUNTY	ROUTE	POST MILES TOTAL PROJECT	SHEET No.	TOTAL SHEETS
12	Ora	241	15.5/39.0	14	117

Lindsay M. Kaufmann 09/01/10
REGISTERED CIVIL ENGINEER DATE

10-18-10
PLANS APPROVAL DATE

REGISTERED PROFESSIONAL ENGINEER LINDSAY M. KAUFMANN No. C71806 Exp. 12/31/11 CIVIL STATE OF CALIFORNIA

THE STATE OF CALIFORNIA OR ITS OFFICERS OR AGENTS SHALL NOT BE RESPONSIBLE FOR THE ACCURACY OR COMPLETENESS OF SCANNED COPIES OF THIS PLAN SHEET.

RBF CONSULTING
14725 ALTON PKWY
IRVINE, CA. 92618-2027

NOTE:
FOR LOCATION WITHIN THE PROJECT LIMITS SEE KEY MAP K-1 TO K-3

DIKE REMOVAL AND PLACEMENT

STATION 1	TO	STATION 2	LINE	OFFSET 1	OFFSET 2	DIRECTION	CASE
2428+67.73	TO	2428+73.98	"241A1"	90.02	90.02	L+	D
2428+73.98	TO	2429+00.08	"241A1"	90.02	90.04	L+	A
2441+76.27	TO	2443+32.08	"241A1"	104.83	102.32	R+	B
2443+32.08	TO	2443+37.71	"241A1"	102.32	102.35	R+	D
2442+52.61	TO	2444+26.15	"241A1"	101.95	93.11	L+	B
2446+61.11	TO	2446+67.36	"241A1"	101.52	101.45	L+	D
2446+67.36	TO	2452+85.35	"241A1"	101.45	100.16	L+	A
2475+33.34	TO	2476+71.64	"241A1"	214.17	250.36	L+	B
2479+77.40	TO	2480+50.71	"241A1"	236.08	203.87	R+	B
2481+68.89	TO	2481+98.54	"241A1"	218.51	213.80	L+	B
2487+94.72	TO	2488+01.13	"241A1"	146.16	145.59	L+	D
2488+01.13	TO	2489+96.93	"241A1"	145.59	129.41	L+	B
2518+48.52	TO	2523+90.80	"241A1"	90.34	90.08	L+	B
2527+90.91	TO	2529+40.82	"241A1"	89.97	89.97	L+	B
2537+73.97	TO	2538+16.24	"241A1"	97.73	98.57	L+	B
2542+16.17	TO	2544+69.91	"241A1"	124.54	154.56	R+	B
2556+98.87	TO	2558+15.28	"241A1"	95.43	94.49	R+	A
2562+96.59	TO	2563+88.80	"241NP2"	20.70	18.58	R+	B
2568+71.37	TO	2569+75.84	"241A1"	102.04	102.02	R+	B
2576+54.55	TO	2576+97.03	"241NP2"	8.09	7.85	R+	B
2592+02.77	TO	2593+86.47	"241A1"	101.99	100.74	L+	A
2622+02.40	TO	270+89.64	"241A1"/"241NB1"	102.35	69.80	R+	B
277+06.01	TO	77+47.75	"241NB1"/"241WS133"	70.19	34.29	R+	B
90+99.97	TO	93+94.08	"241WS133"	5.08	5.54	L+	B
93+94.08	TO	94+00.19	"241WS133"	5.54	5.55	L+	D
288+36.61	TO	89+52.06	"241SB1"/"133NE241"	73.39	37.19	L+	A
94+08.36	TO	99+43.93	"133NE241"	34.69	34.25	L+	B
305+72.61	TO	307+54.92	"241NB1"	46.20	46.44	R+	B
311+70.75	TO	312+26.99	"241SB1"	50.26	49.67	L+	C
68+32.68	TO	68+76.09	"241S133"	34.14	34.40	L+	B
327+97.47	TO	329+95.08	"241NB1"	45.95	45.92	R+	B
71+05.96	TO	347+18.07	"241S133"/"241SB1"	34.27	55.94	L+	B
9336+51.55	TO	352+41.07	"133N241"/"241B1"	33.41	70.42	R+	B
369+05.88	TO	369+17.01	"241B1"	60.53	58.78	R+	C
375+21.57	TO	375+60.73	"241B1"	58.07	58.20	R+	B
382+90.58	TO	394+22.66	"241B1"	57.90	58.22	R+	B
394+22.66	TO	394+28.68	"241B1"	58.22	58.22	R+	D
444+23.24	TO	447+70.73	"241B1"	70.05	70.07	R+	B
496+37.50	TO	498+59.41	"241B1"	58.89	62.73	R+	B
1589+39.28	TO	1591+21.98	"241NBR1"	45.98	46.07	R+	B
2588+01.95	TO	2593+61.55	"241SBR1"	120.44	334.91	L+	B
30+48.39	TO	31+44.08	"241CH8"	96.01	34.40	R+	B
31+44.08	TO	31+50.04	"241CH8"	34.40	34.43	R+	D
30+81.08	TO	31+65.21	"241CH8"	9.25	4.51	L+	A
31+65.21	TO	31+71.09	"241CH8"	4.51	5.57	L+	D
37+85.92	TO	44+09.05	"241CH8"	5.16	4.14	L+	B
1597+72.40	TO	1599+23.30	"241NBR1"	46.19	46.37	R+	B
1605+86.95	TO	1607+56.25	"241NBR1"	46.26	46.11	R+	B
34+90.61	TO	46+57.82	"241CH7"	45.99	34.06	L+	B
4802+80.59	TO	4803+16.74	"261N241"	8.10	8.26	L+	C
2626+16.53	TO	2626+59.23	"241SBR1"	58.42	58.28	L+	B
2812+63.52	TO	2813+55.96	"261B241"	120.11	120.18	R+	B
2818+08.14	TO	2818+32.06	"261B241"	120.07	119.90	R+	B
2819+24.84	TO	2826+54.75	"261B241"	119.89	111.98	R+	B
2831+46.64	TO	2831+84.75	"261B241"	108.06	108.32	R+	C

DIKE REMOVAL AND PLACEMENT

STATION 1	TO	STATION 2	LINE	OFFSET 1	OFFSET 2	DIRECTION	CASE
2834+86.34	TO	2835+28.95	"261B241"	108.20	108.17	L+	B
668+26.71	TO	668+32.54	"241A3"	102.63	102.54	L+	D
668+32.54	TO	670+29.86	"241A3"	102.54	100.83	L+	B
685+98.73	TO	705+57.69	"241A3"	91.77	89.98	L+	B
691+79.36	TO	693+07.49	"241A3"	124.06	124.08	R+	B
698+70.74	TO	713+38.48	"241A3"	124.29	126.01	R+	B
713+38.48	TO	713+44.29	"241A3"	126.01	124.88	R+	D
716+80.46	TO	734+62.77	"241A3"	124.67	124.48	R+	B
721+31.54	TO	756+01.93	"241A3"	90.11	92.82	L+	B
738+05.71	TO	739+12.81	"241A3"	127.31	127.03	R+	A
758+57.29	TO	758+63.27	"241A3"	100.98	100.95	L+	D
758+63.27	TO	758+87.39	"241A3"	100.95	101.06	L+	B
773+86.64	TO	777+55.76	"241SBTOLL1"	76.15	102.66	L+	A
780+27.88	TO	780+70.04	"241A3"	100.24	100.15	R+	B
782+21.49	TO	782+64.25	"241A3"	77.20	77.57	L+	B
814+24.46	TO	815+26.00	"241A3"	102.06	102.02	L+	B
814+97.35	TO	815+15.17	"241A3"	124.58	124.52	R+	B
815+15.17	TO	815+19.35	"241A3"	124.52	124.51	R+	D
817+42.37	TO	817+48.37	"241A3"	102.31	102.26	L+	D
817+48.37	TO	821+46.54	"241A3"	102.26	105.42	L+	A
817+46.68	TO	850+79.16	"241A3"	124.53	113.94	R+	B
844+03.04	TO	851+19.18	"241A3"	101.46	101.60	L+	B
855+21.91	TO	857+12.69	"241A3"	114.75	115.05	R+	B
862+78.99	TO	863+15.97	"241A3"	115.53	111.32	R+	C
865+48.79	TO	887+61.65	"241A3"	112.53	109.93	L+	B
865+72.49	TO	895+34.21	"241A3"	112.53	124.24	R+	B
896+00.39	TO	3901+28.58	"241A3"/"241NW91"	124.30	58.00	R+	B
5900+91.64	TO	4911+44.68	"91WS241"/"91ES241"	69.63	33.99	L+	B
6909+01.76	TO	6914+55.45	"241NE91"	34.45	34.12	R+	B
4912+27.06	TO	4918+68.56	"91ES241"	33.74	33.91	L+	B
4919+38.35	TO	4924+01.26	"91ES241"	33.95	33.99	L+	B
4928+44.36	TO	4930+02.66	"91ES241"	33.95	34.14	L+	B
5913+85.18	TO	5920+90.42	"91WS241"	9.30	5.49	R+	B
5923+42.95	TO	5923+48.83	"91WS241"	5.61	5.61	R+	D
5923+48.83	TO	5930+53.41	"91WS241"	5.61	5.38	R+	B
3923+29.25	TO	3927+84.24	"241NW91"	5.09	5.03	L+	B
6930+42.09	TO	6930+97.11	"241NE91"	34.23	34.19	R+	B
6930+97.11	TO	6931+02.99	"241NE91"	34.19	34.46	R+	D

CONSTRUCTION DETAILS
(HMA DIKE REPLACEMENT)

NO SCALE

C-10

LAST REVISION	DATE PLOTTED => 19-OCT-2010
06-08-10	TIME PLOTTED => 13:33

REVISED BY	RK/WT		
DATE REVISED	07/22/10		
CALCULATED-DESIGNED BY	LINDSAY KAUFMANN		
CHECKED BY	LINDSAY KAUFMANN		
CONSULTANT FUNCTIONAL SUPERVISOR	MIKE CHESNEY		

STATE OF CALIFORNIA - DEPARTMENT OF TRANSPORTATION
Caltrans

H:\pdata\10106739\CADD\TransPW\Div\Merge\8-24-10\c06370ga010.dgn trlenard 19-OCT-2010 13:33

Dist	COUNTY	ROUTE	POST MILES TOTAL PROJECT	SHEET No.	TOTAL SHEETS
12	Ora	241	15.5/39.0	15	117

Lindsay M. Kaufmann 09/01/10
REGISTERED CIVIL ENGINEER DATE

10-18-10
PLANS APPROVAL DATE

REGISTERED PROFESSIONAL ENGINEER LINDSAY M. KAUFMANN No. C71806 Exp. 12/31/11 CIVIL STATE OF CALIFORNIA

THE STATE OF CALIFORNIA OR ITS OFFICERS OR AGENTS SHALL NOT BE RESPONSIBLE FOR THE ACCURACY OR COMPLETENESS OF SCANNED COPIES OF THIS PLAN SHEET.

RBF CONSULTING
14725 ALTON PKWY
IRVINE, CA. 92618-2027

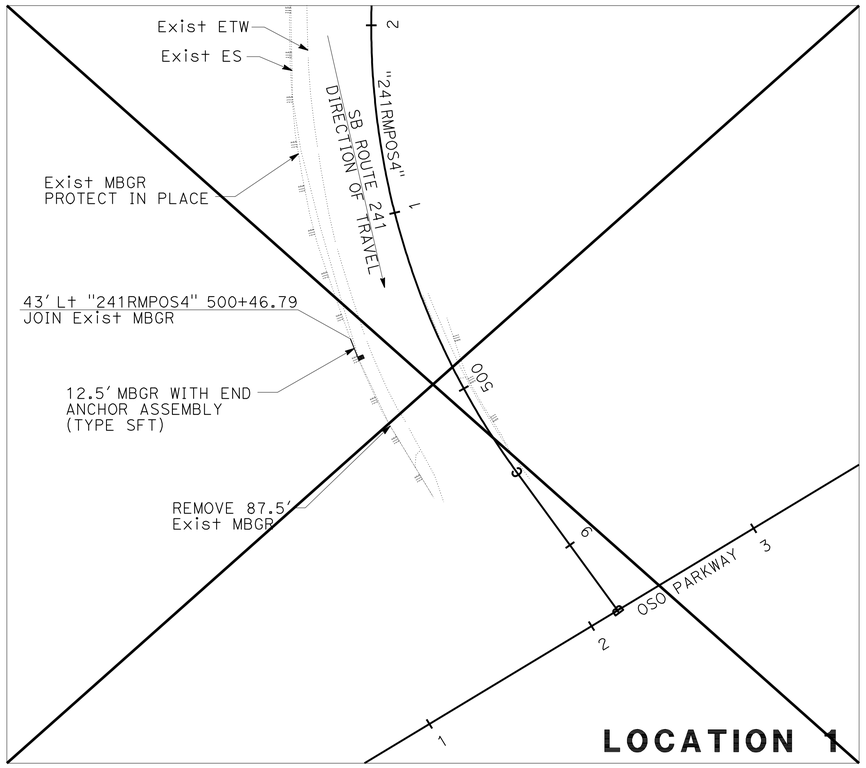

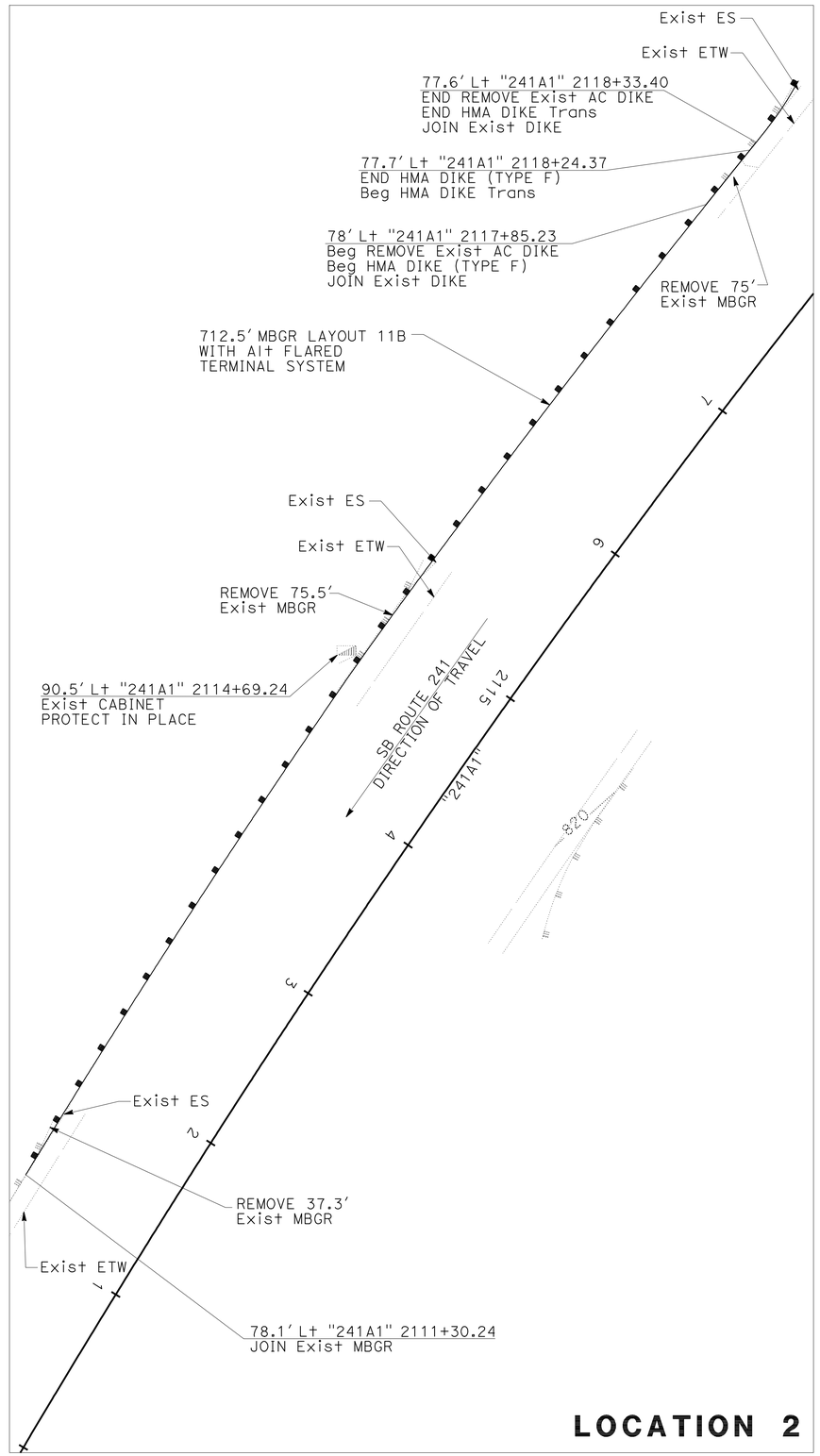

NOTES:

1. FOR LOCATION WITHIN THE PROJECT LIMITS SEE KEY MAP K-1 TO K-3
2. INSTALL GUARD RAILING DELINEATORS AT THE BEGINNING, THE END AND AT 25 Ft INCREMENTS OF EACH MBGR SECTION PER CALTRANS Std PLAN A77C4 AND A73C. TYPE AND QUANTITY ARE LOCATED ON QUANTITY SHEETS Q-20 TO Q-24.

CONSTRUCTION DETAILS
(MBGR UPGRADE DETAIL)
SCALE: 1" = 40'

C-11

REVISED BY	RK/WT		
DATE REVISED	07/22/10		
LINDSAY KAUFMANN			
LINDSAY KAUFMANN			
CALCULATED-DESIGNED BY			
CHECKED BY			
CONSULTANT FUNCTIONAL SUPERVISOR			
MIKE CHESNEY			

STATE OF CALIFORNIA - DEPARTMENT OF TRANSPORTATION
Caltrans

H:\pdata\10106739\CADD\TransPW\Div\Merge\8-24-10\c0G370ga011.dgn
trlenard 19-OCT-2010 13:33

LAST REVISION 06-08-10
DATE PLOTTED => 19-OCT-2010
TIME PLOTTED => 13:33

Dist	COUNTY	ROUTE	POST MILES TOTAL PROJECT	SHEET No.	TOTAL SHEETS
12	Ora	241	15.5/39.0	16	117

Lindsay M. Kaufmann 09/01/10
REGISTERED CIVIL ENGINEER DATE

10-18-10
PLANS APPROVAL DATE

REGISTERED PROFESSIONAL ENGINEER LINDSAY M. KAUFMANN No. C71806 Exp. 12/31/11 CIVIL STATE OF CALIFORNIA

THE STATE OF CALIFORNIA OR ITS OFFICERS OR AGENTS SHALL NOT BE RESPONSIBLE FOR THE ACCURACY OR COMPLETENESS OF SCANNED COPIES OF THIS PLAN SHEET.

RBF CONSULTING
14725 ALTON PKWY
IRVINE, CA. 92618-2027

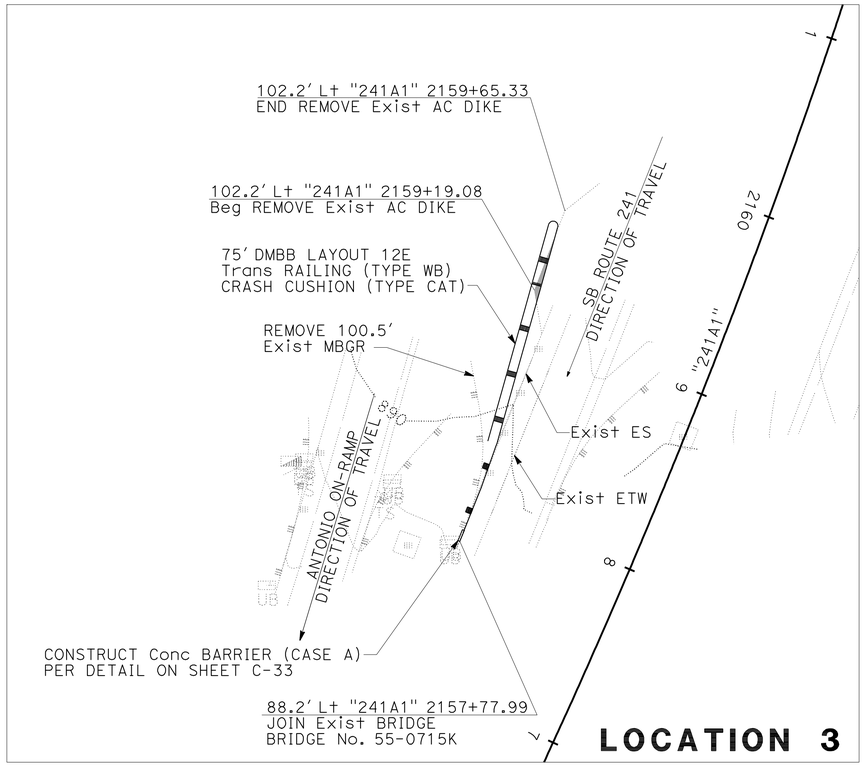

LOCATION 3

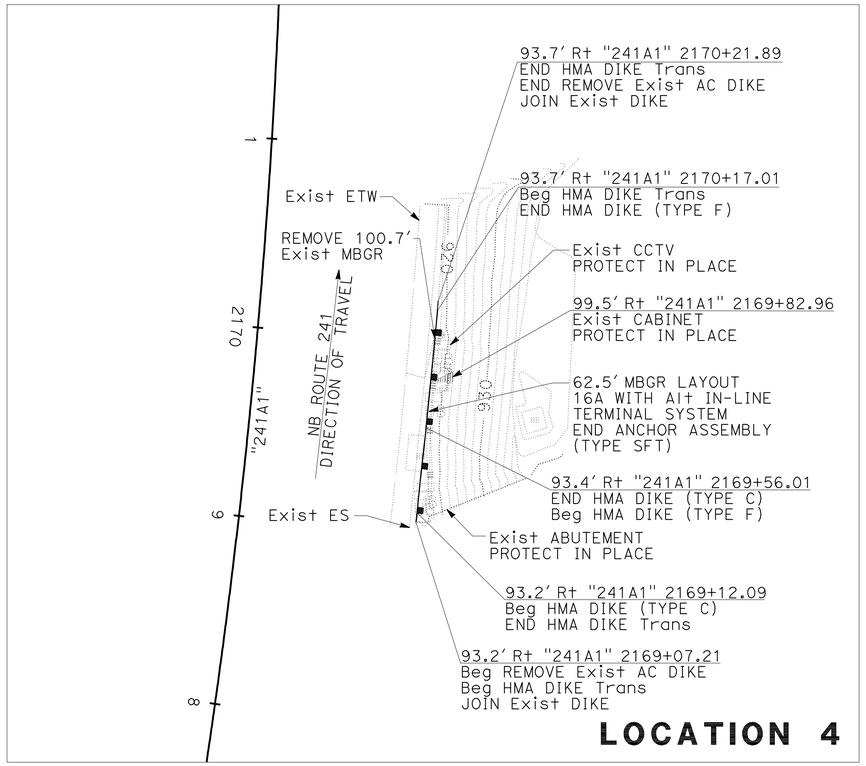

LOCATION 4

LEGEND:

REMOVE Exist AC PAVEMENT (FOR STATION LIMITS SEE SHEET Q-19)

NOTES:

1. FOR LOCATION WITHIN THE PROJECT LIMITS SEE KEY MAP K-1 TO K-3
2. INSTALL GUARD RAILING DELINEATORS AT THE BEGINNING, THE END AND AT 25 Ft INCREMENTS OF EACH MBGR SECTION PER CALTRANS Std PLAN A77C4 AND A73C. TYPE AND QUANTITY ARE LOCATED ON QUANTITY SHEETS Q-20 TO Q-24.

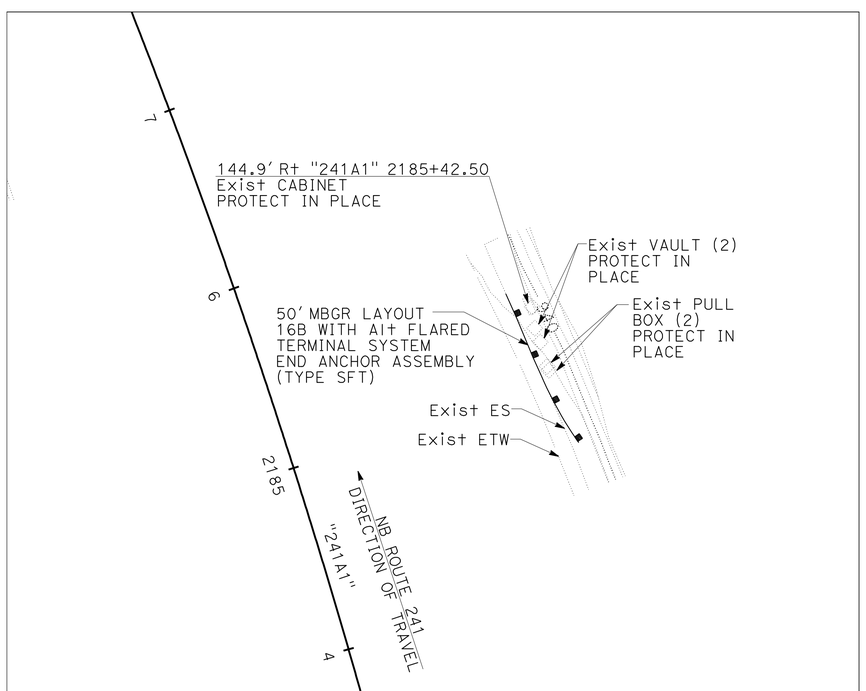

LOCATION 5

CONSTRUCTION DETAILS
(MBGR UPGRADE DETAIL)
SCALE: 1" = 40'

C-12

STATE OF CALIFORNIA - DEPARTMENT OF TRANSPORTATION
Caltrans
CONSULTANT FUNCTIONAL SUPERVISOR: MIKE CHESNEY
CALCULATED-DESIGNED BY: LINDSAY KAUFMANN
CHECKED BY: LINDSAY KAUFMANN
REVISED BY: RK/WT
DATE REVISED: 07/22/10
trlenard 19-OCT-2010 13:33
H:\pdata\10106739\CADD\TransPW\Div\Merge\8-24-10\c0G370ga012.dgn

LAST REVISION 06-08-10 | DATE PLOTTED => 19-OCT-2010 | TIME PLOTTED => 13:33

BORDER LAST REVISED 7/2/2010 | USERNAME => trlenard | DGN FILE => c0G370ga012.dgn | RELATIVE BORDER SCALE IS IN INCHES 0 1 2 3 | UNIT 2998 | PROJECT NUMBER & PHASE 12000001431

Dist	COUNTY	ROUTE	POST MILES TOTAL PROJECT	SHEET No.	TOTAL SHEETS
12	Ora	241	15.5/39.0	17	117

Lindsay M. Kaufmann 09/01/10
REGISTERED CIVIL ENGINEER DATE

10-18-10
PLANS APPROVAL DATE

REGISTERED PROFESSIONAL ENGINEER LINDSAY M. KAUFMANN No. C71806 Exp. 12/31/11 CIVIL STATE OF CALIFORNIA

THE STATE OF CALIFORNIA OR ITS OFFICERS OR AGENTS SHALL NOT BE RESPONSIBLE FOR THE ACCURACY OR COMPLETENESS OF SCANNED COPIES OF THIS PLAN SHEET.

RBF CONSULTING
14725 ALTON PKWY
IRVINE, CA. 92618-2027

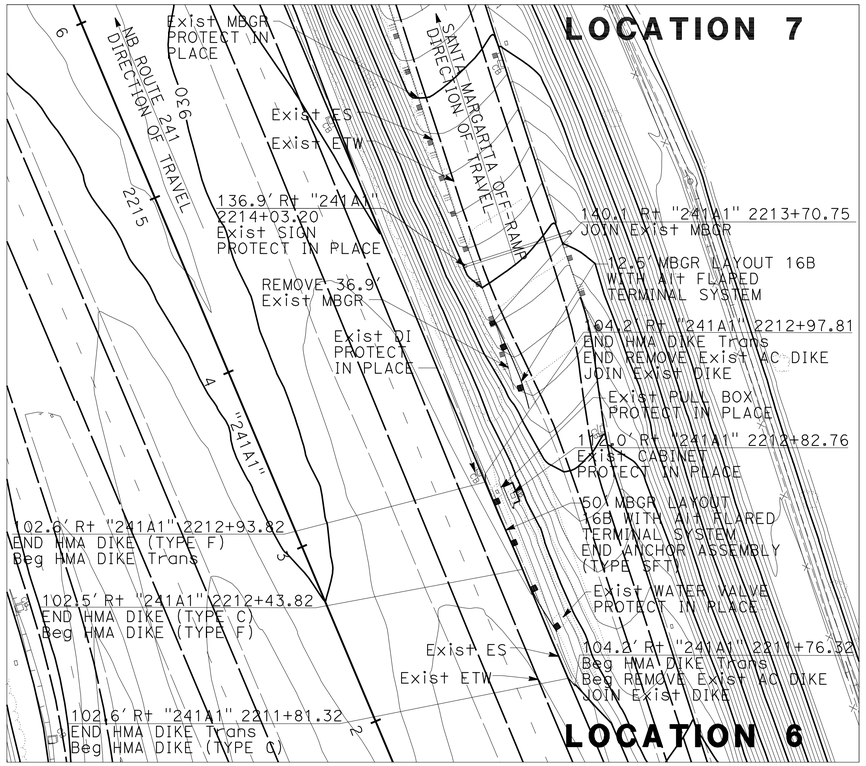

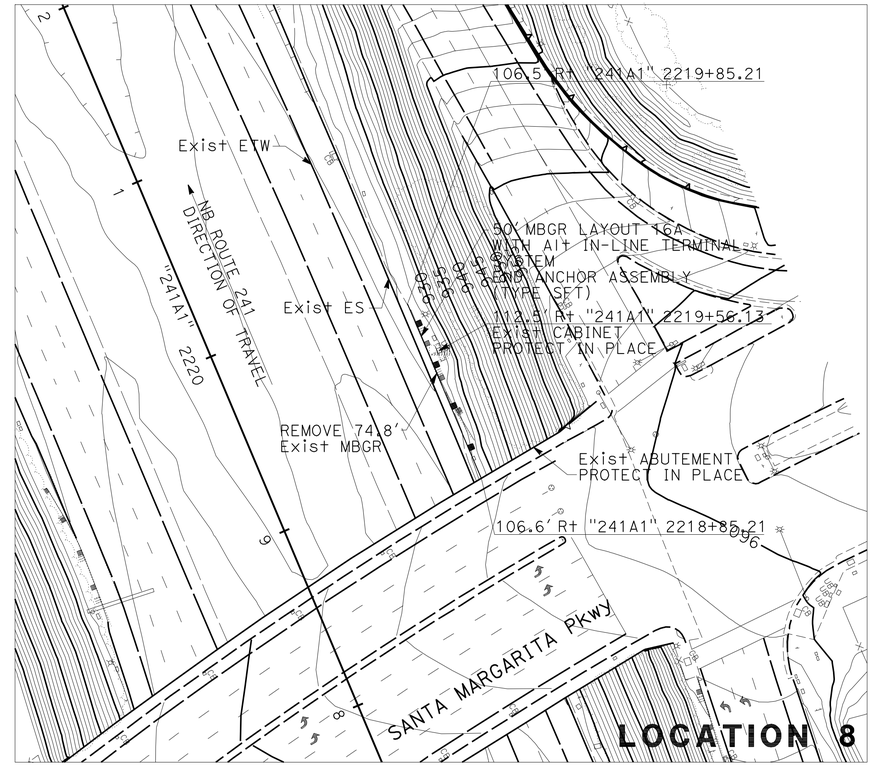

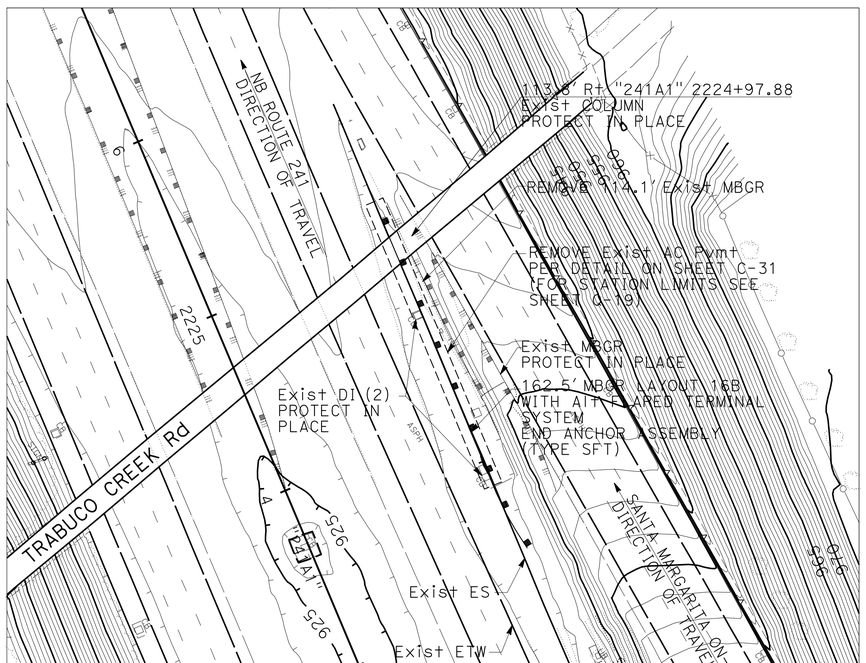

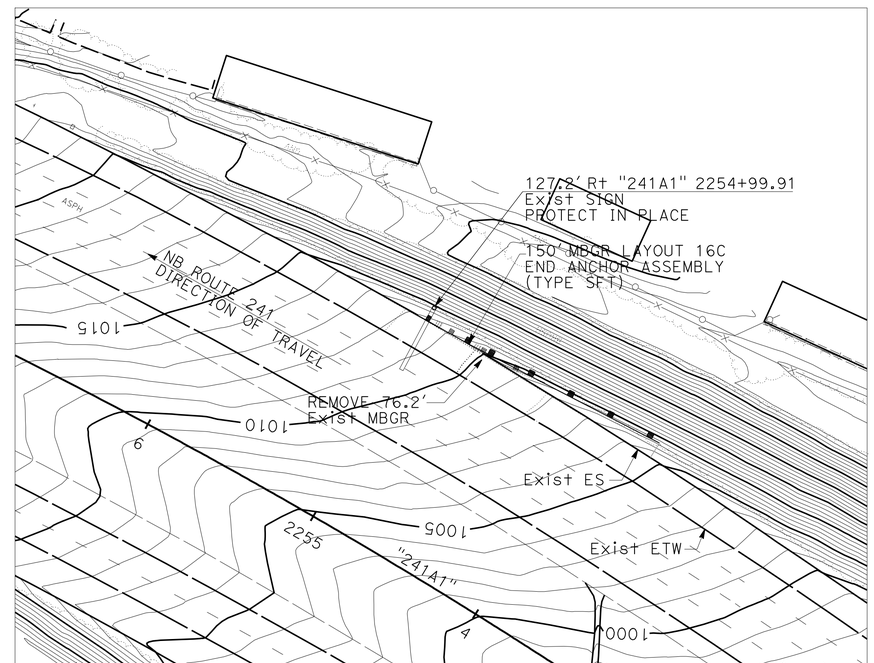

NOTES:

1. FOR LOCATION WITHIN THE PROJECT LIMITS SEE KEY MAP K-1 TO K-3
2. INSTALL GUARD RAILING DELINEATORS AT THE BEGINNING, THE END AND AT 25 Ft INCREMENTS OF EACH MBGR SECTION PER CALTRANS Std PLAN A77C4 AND A73C. TYPE AND QUANTITY ARE LOCATED ON QUANTITY SHEETS Q-20 TO Q-24.

CONSTRUCTION DETAILS
(MBGR UPGRADE DETAIL)
SCALE: 1" = 40'

C-13

REVISED BY	RK/WT		
DATE REVISED	07/22/10		
CALCULATED-DESIGNED BY	LINDSAY KAUFMANN		
CHECKED BY	LINDSAY KAUFMANN		
CONSULTANT FUNCTIONAL SUPERVISOR	MIKE CHESNEY		

STATE OF CALIFORNIA - DEPARTMENT OF TRANSPORTATION

Caltrans

H:\pdata\10106739\CADD\TransPW\Div\Merge\8-24-10\c0G370ga013.dgn trlenard 19-OCT-2010 13:33

LAST REVISION 06-08-10 | DATE PLOTTED => 19-OCT-2010 | TIME PLOTTED => 13:33

Dist	COUNTY	ROUTE	POST MILES TOTAL PROJECT	SHEET No.	TOTAL SHEETS
12	Ora	241	15.5/39.0	18	117

Lindsay M. Kaufmann 09/01/10
REGISTERED CIVIL ENGINEER DATE

10-18-10
PLANS APPROVAL DATE

REGISTERED PROFESSIONAL ENGINEER LINDSAY M. KAUFMANN No. C71806 Exp. 12/31/11 CIVIL STATE OF CALIFORNIA

THE STATE OF CALIFORNIA OR ITS OFFICERS OR AGENTS SHALL NOT BE RESPONSIBLE FOR THE ACCURACY OR COMPLETENESS OF SCANNED COPIES OF THIS PLAN SHEET.

RBF CONSULTING
14725 ALTON PKWY
IRVINE, CA. 92618-2027

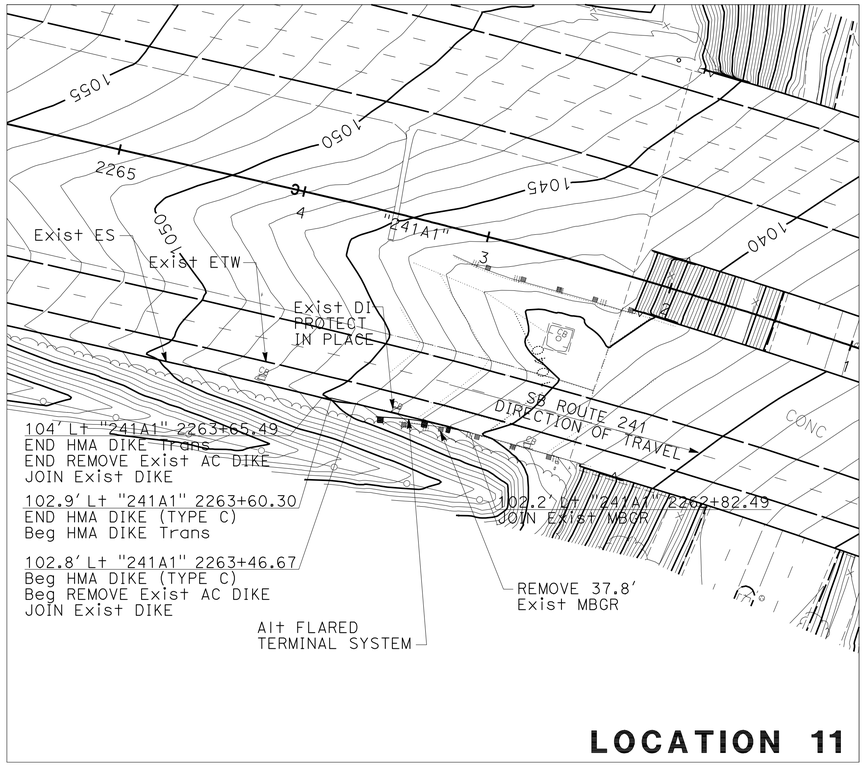

LOCATION 11

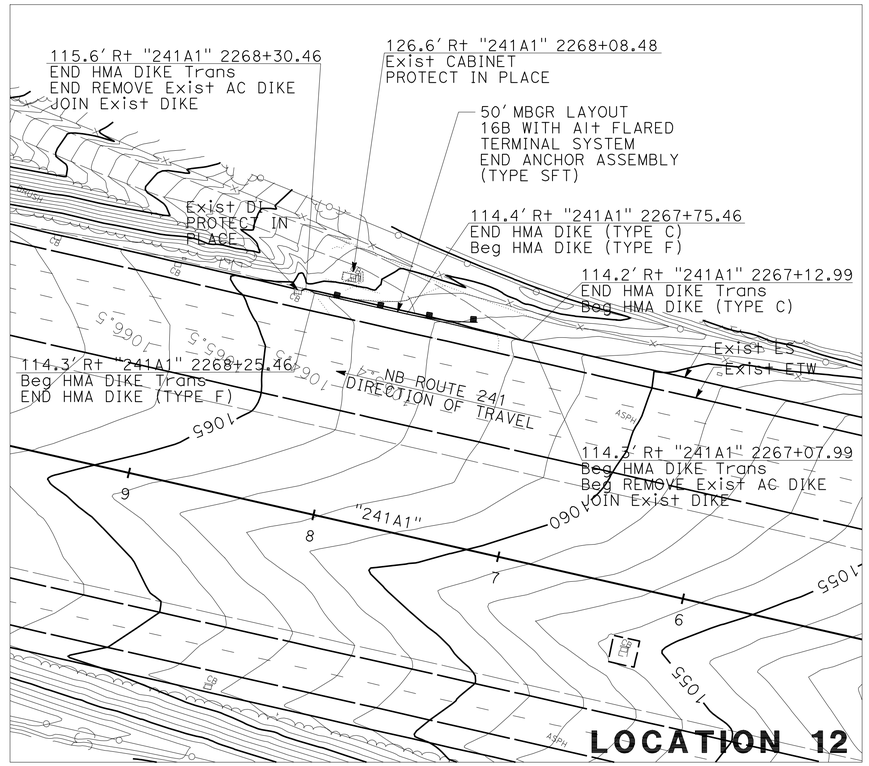

LOCATION 12

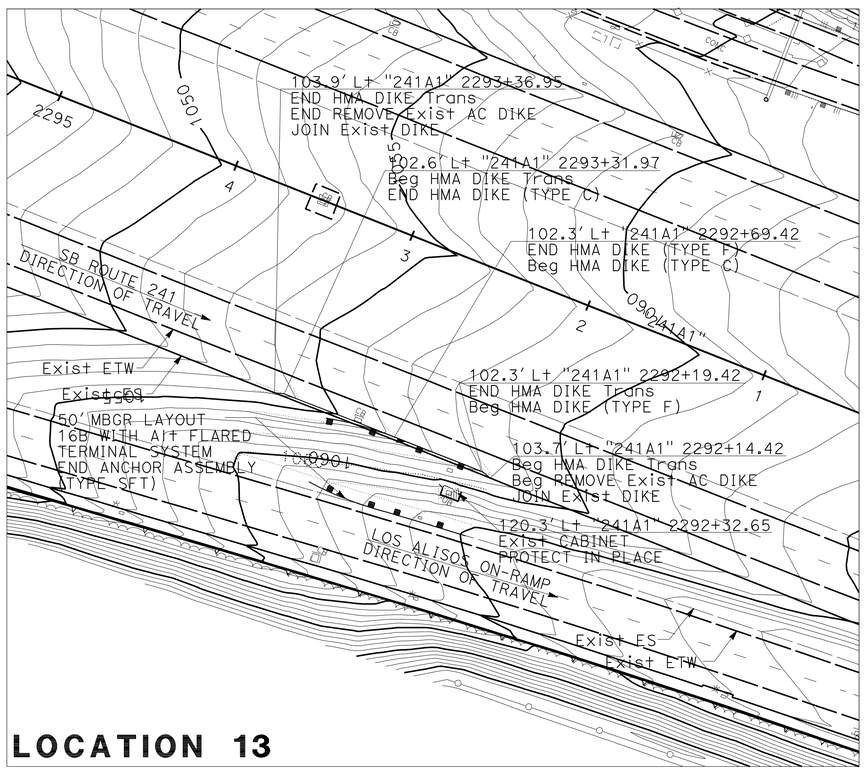

LOCATION 13

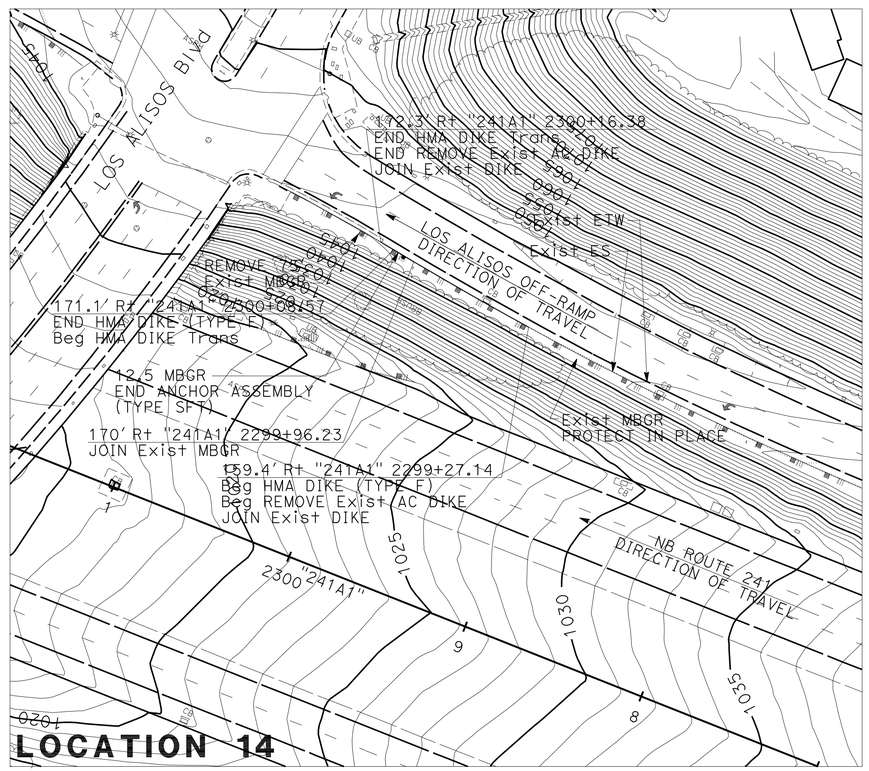

LOCATION 14

NOTES:

1. FOR LOCATION WITHIN THE PROJECT LIMITS SEE KEY MAP K-1 TO K-3
2. INSTALL GUARD RAILING DELINEATORS AT THE BEGINNING, THE END AND AT 25 Ft INCREMENTS OF EACH MBGR SECTION PER CALTRANS Std PLAN A77C4 AND A73C. TYPE AND QUANTITY ARE LOCATED ON QUANTITY SHEETS Q-20 TO Q-24.

CONSTRUCTION DETAILS
(MBGR UPGRADE DETAIL)

SCALE: 1" = 40'

C-14

REVISED BY	RK/WT		
DATE REVISED	07/22/10		
LINDSAY KAUFMANN			
LINDSAY KAUFMANN			
CALCULATED-DESIGNED BY			
CHECKED BY			
CONSULTANT FUNCTIONAL SUPERVISOR			
MIKE CHESNEY			

STATE OF CALIFORNIA - DEPARTMENT OF TRANSPORTATION
Caltrans

H:\pdata\10106739\CADD\TransPW\Div\Merge\8-24-10\c0G370ga014.dgn trlenard 19-OCT-2010 13:33

LAST REVISION 06-08-10 | DATE PLOTTED => 19-OCT-2010 | TIME PLOTTED => 13:33

Dist	COUNTY	ROUTE	POST MILES TOTAL PROJECT	SHEET No.	TOTAL SHEETS
12	Ora	241	15.5/39.0	19	117

Lindsay M. Kaufmann 09/01/10
REGISTERED CIVIL ENGINEER DATE

10-18-10
PLANS APPROVAL DATE

REGISTERED PROFESSIONAL ENGINEER LINDSAY M. KAUFMANN No. C71806 Exp. 12/31/11 CIVIL STATE OF CALIFORNIA

THE STATE OF CALIFORNIA OR ITS OFFICERS OR AGENTS SHALL NOT BE RESPONSIBLE FOR THE ACCURACY OR COMPLETENESS OF SCANNED COPIES OF THIS PLAN SHEET.

RBF CONSULTING
14725 ALTON PKWY
IRVINE, CA. 92618-2027

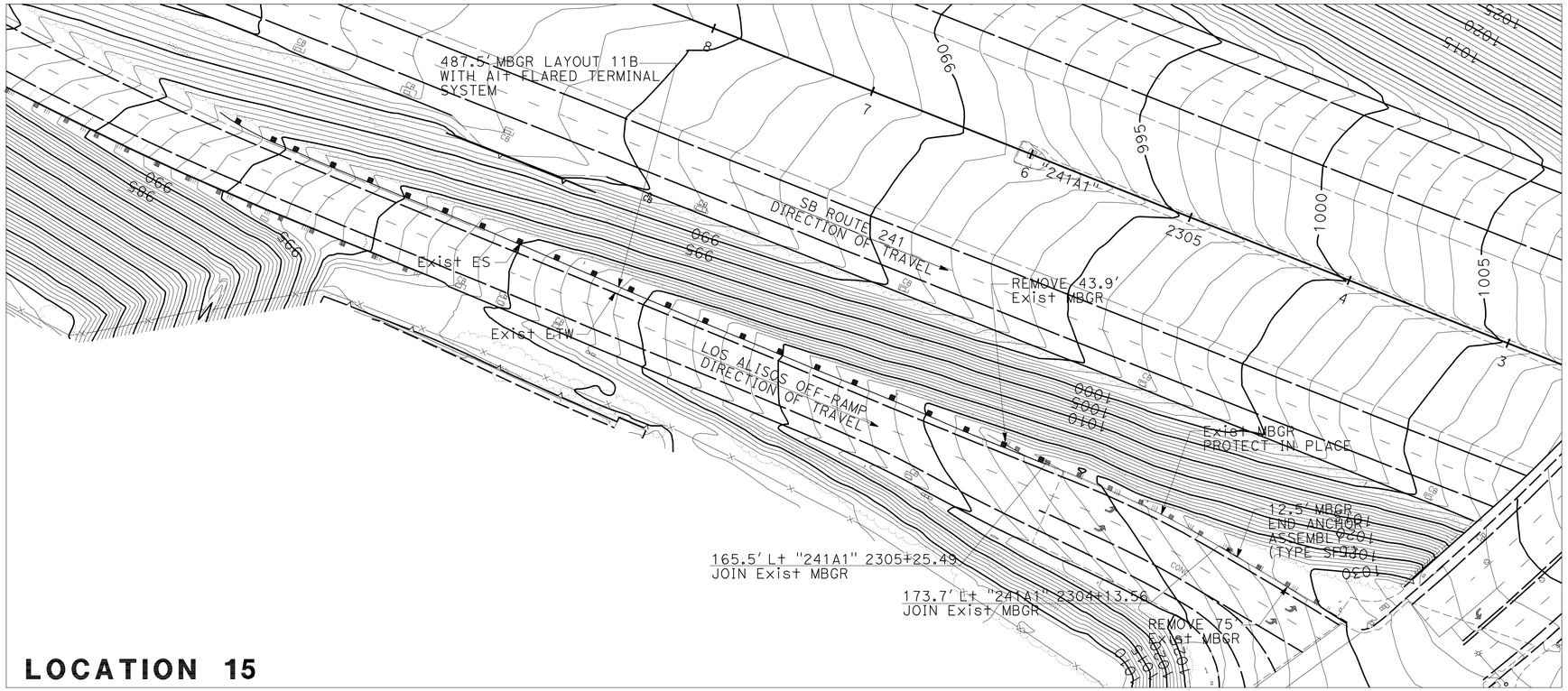

LOCATION 15

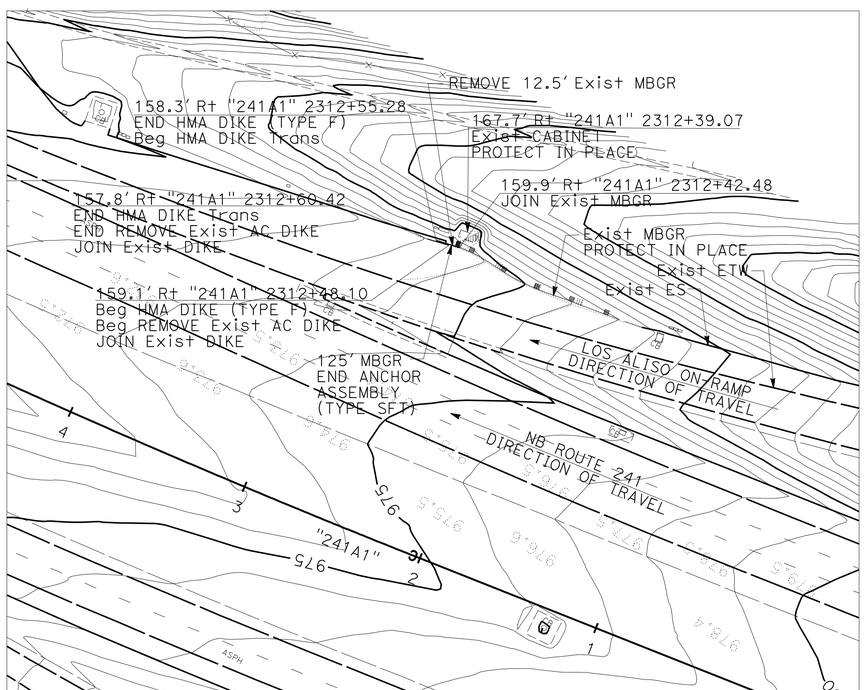

LOCATION 16

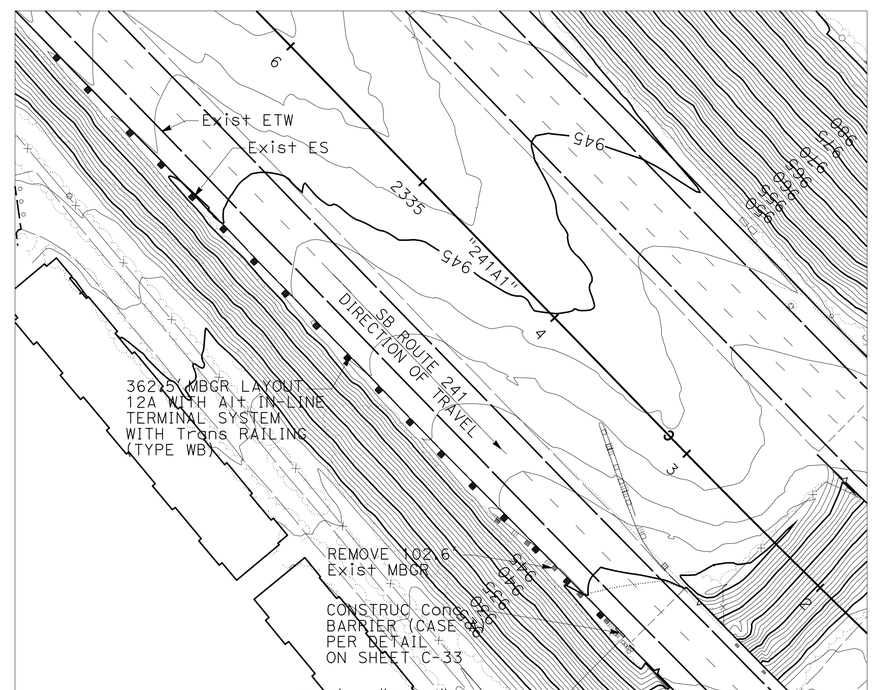

LOCATION 17

NOTES:

1. FOR LOCATION WITHIN THE PROJECT LIMITS SEE KEY MAP K-1 TO K-3
2. INSTALL GUARD RAILING DELINEATORS AT THE BEGINNING, THE END AND AT 25 Ft INCREMENTS OF EACH MBGR SECTION PER CALTRANS Std PLAN A77C4 AND A73C. TYPE AND QUANTITY ARE LOCATED ON QUANTITY SHEETS Q-20 TO Q-24.

CONSTRUCTION DETAILS
(MBGR UPGRADE DETAIL)

SCALE: 1" = 40'

C-15

REVISED BY	RK/WT		
DATE REVISED	07/22/10		
CALCULATED-DESIGNED BY	LINDSAY KAUFMANN		
CHECKED BY	LINDSAY KAUFMANN		
CONSULTANT FUNCTIONAL SUPERVISOR	MIKE CHESNEY		

STATE OF CALIFORNIA - DEPARTMENT OF TRANSPORTATION

Caltrans

H:\pdata\10106739\CADD\TransPW\Div\Merge\8-24-10\c0G370ga015.dgn trlenard 19-OCT-2010 13:34

LAST REVISION DATE PLOTTED => 19-OCT-2010
06-08-10 TIME PLOTTED => 13:34

Dist	COUNTY	ROUTE	POST MILES TOTAL PROJECT	SHEET No.	TOTAL SHEETS
12	Ora	241	15.5/39.0	20	117

Lindsay M. Kaufmann 09/01/10
REGISTERED CIVIL ENGINEER DATE

10-18-10
PLANS APPROVAL DATE

REGISTERED PROFESSIONAL ENGINEER LINDSAY M. KAUFMANN No. C71806 Exp. 12/31/11 CIVIL STATE OF CALIFORNIA

THE STATE OF CALIFORNIA OR ITS OFFICERS OR AGENTS SHALL NOT BE RESPONSIBLE FOR THE ACCURACY OR COMPLETENESS OF SCANNED COPIES OF THIS PLAN SHEET.

RBF CONSULTING
14725 ALTON PKWY
IRVINE, CA. 92618-2027

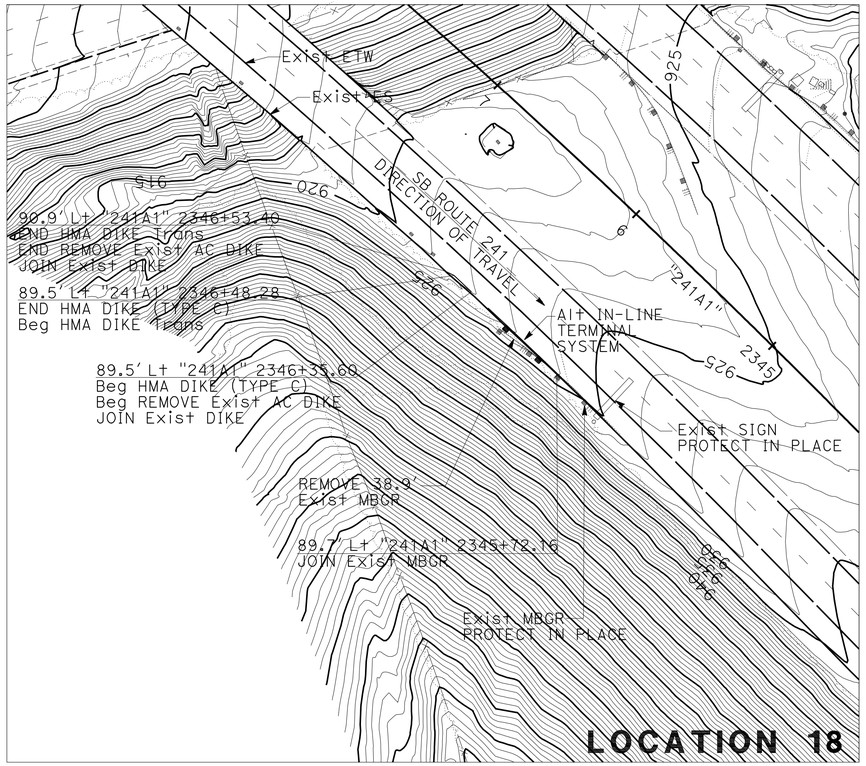

LOCATION 18

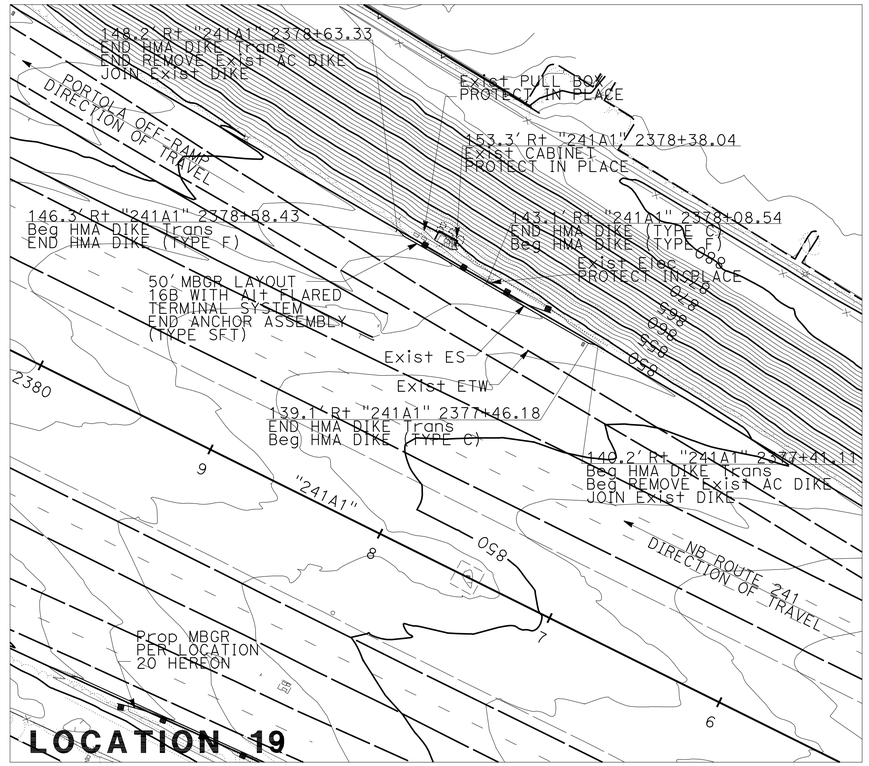

LOCATION 19

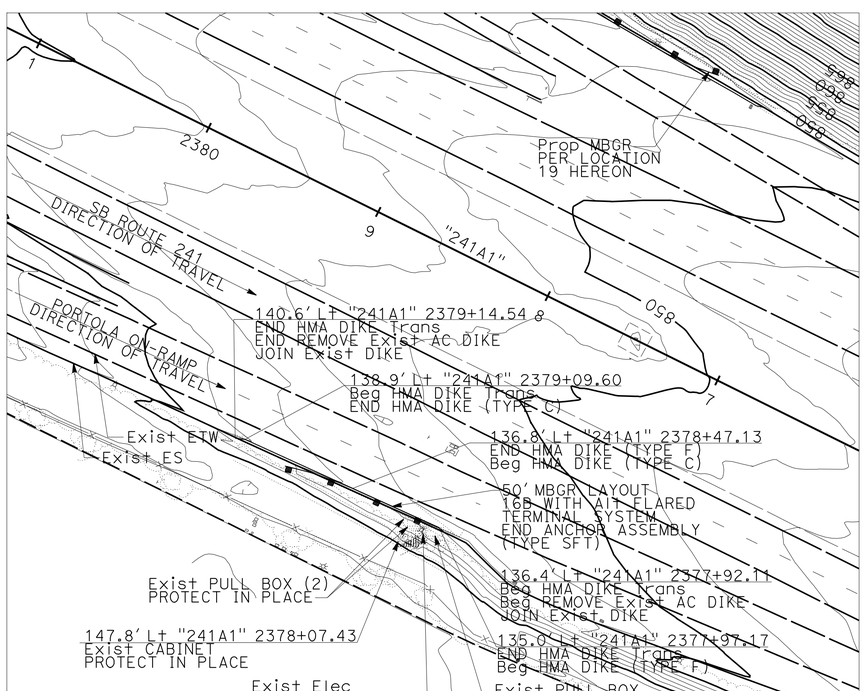

LOCATION 20

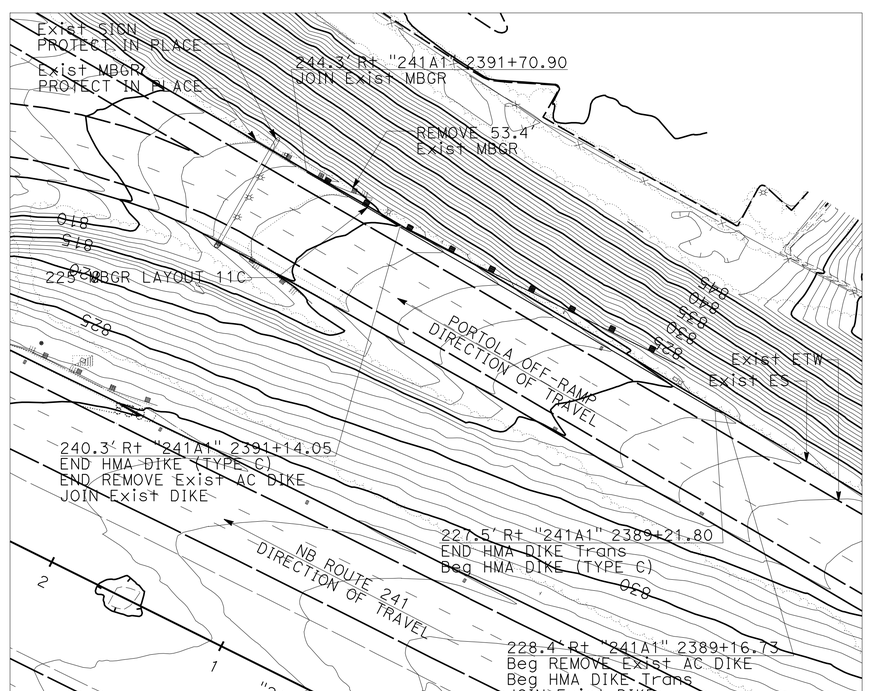

LOCATION 21

NOTES:

1. FOR LOCATION WITHIN THE PROJECT LIMITS SEE KEY MAP K-1 TO K-3
2. INSTALL GUARD RAILING DELINEATORS AT THE BEGINNING, THE END AND AT 25 Ft INCREMENTS OF EACH MBGR SECTION PER CALTRANS Std PLAN A77C4 AND A73C. TYPE AND QUANTITY ARE LOCATED ON QUANTITY SHEETS Q-20 TO Q-24.

CONSTRUCTION DETAILS
(MBGR UPGRADE DETAIL)
SCALE: 1" = 40'

C-16

REVISED BY	DATE REVISED
RK/WT	07/22/10

STATE OF CALIFORNIA - DEPARTMENT OF TRANSPORTATION
Caltrans
CONSULTANT FUNCTIONAL SUPERVISOR: MIKE CHESNEY
CALCULATED-DESIGNED BY: LINDSAY KAUFMANN
CHECKED BY: LINDSAY KAUFMANN

H:\pdata\10106739\CADD\TransPW\Div\Merge\8-24-10\c0G370ga016.dgn 19-OCT-2010 13:37 s135318

LAST REVISION 06-08-10 DATE PLOTTED => 19-OCT-2010 TIME PLOTTED => 13:37

Dist	COUNTY	ROUTE	POST MILES TOTAL PROJECT	SHEET No.	TOTAL SHEETS
12	Ora	241	15.5/39.0	21	117

Lindsay M. Kaufmann 09/01/10
REGISTERED CIVIL ENGINEER DATE

10-18-10
PLANS APPROVAL DATE

REGISTERED PROFESSIONAL ENGINEER
LINDSAY M. KAUFMANN
No. C71806
Exp. 12/31/11
CIVIL
STATE OF CALIFORNIA

THE STATE OF CALIFORNIA OR ITS OFFICERS OR AGENTS SHALL NOT BE RESPONSIBLE FOR THE ACCURACY OR COMPLETENESS OF SCANNED COPIES OF THIS PLAN SHEET.

RBF CONSULTING
14725 ALTON PKWY
IRVINE, CA. 92618-2027

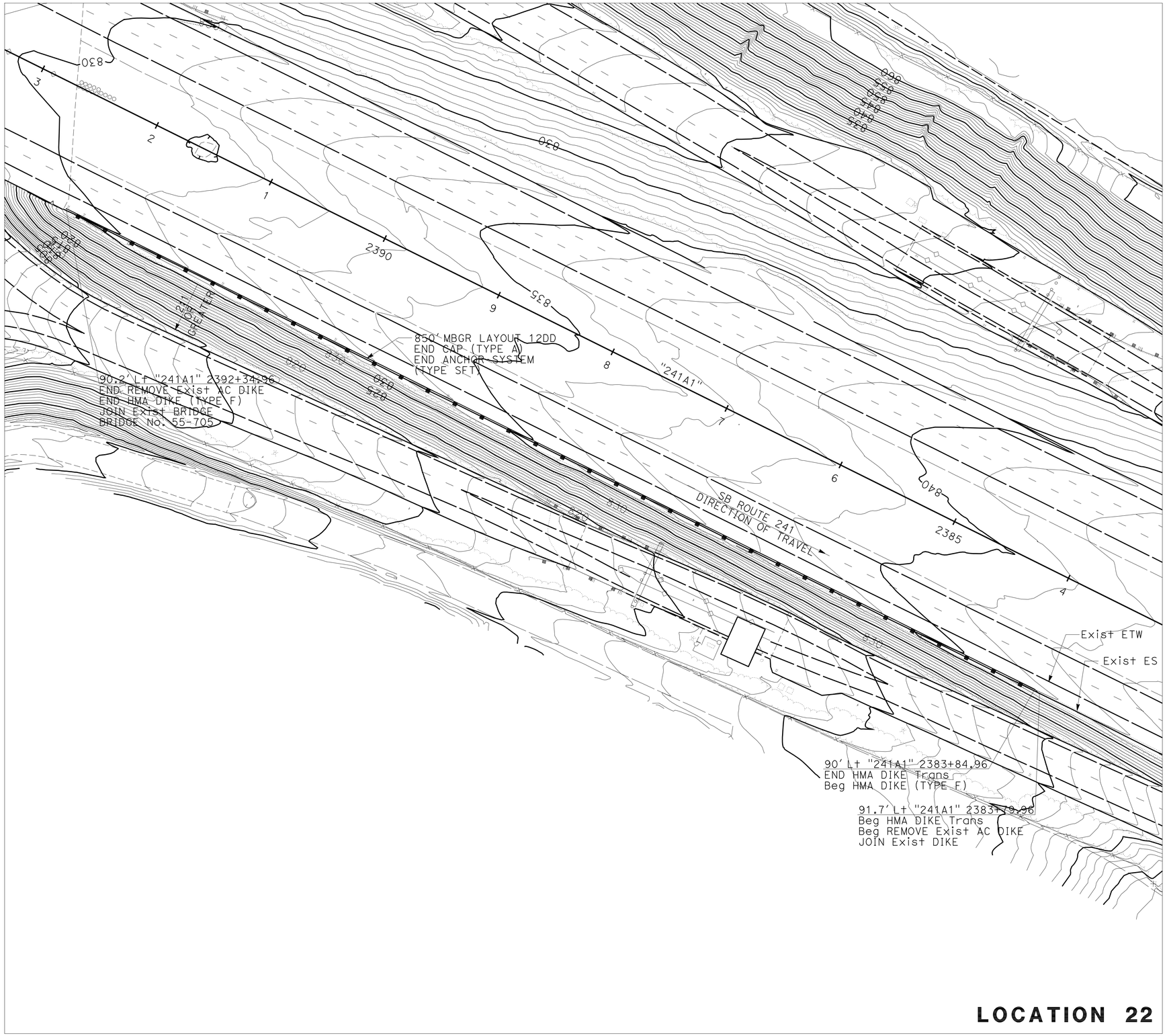

NOTES:

1. FOR LOCATION WITHIN THE PROJECT LIMITS SEE KEY MAP K-1 TO K-3
2. INSTALL GUARD RAILING DELINEATORS AT THE BEGINNING, THE END AND AT 25 Ft INCREMENTS OF EACH MBGR SECTION PER CALTRANS Std PLAN A77C4 AND A73C. TYPE AND QUANTITY ARE LOCATED ON QUANTITY SHEETS Q-20 TO Q-24.

LOCATION 22

CONSTRUCTION DETAILS
(MBGR UPGRADE DETAIL)
SCALE: 1" = 40'

C-17

		RK/WT	07/22/10
		REVISED BY	DATE REVISED
s135318	19-OCT-2010 13:38	LINDSAY KAUFMANN	LINDSAY KAUFMANN
CALCULATED-DESIGNED BY		CHECKED BY	
CONSULTANT FUNCTIONAL SUPERVISOR		MIKE CHESNEY	

STATE OF CALIFORNIA - DEPARTMENT OF TRANSPORTATION
Caltrans

H:\pdata\10106739\CADD\TransPW\Div\Merge\8-24-10\c06370ga017.dgn

LAST REVISION 06-08-10 | DATE PLOTTED => 19-OCT-2010 | TIME PLOTTED => 13:38

Dist	COUNTY	ROUTE	POST MILES TOTAL PROJECT	SHEET No.	TOTAL SHEETS
12	Ora	241	15.5/39.0	22	117

Lindsay M. Kaufmann 09/01/10
REGISTERED CIVIL ENGINEER DATE

10-18-10
PLANS APPROVAL DATE

REGISTERED PROFESSIONAL ENGINEER LINDSAY M. KAUFMANN No. C71806 Exp. 12/31/11 CIVIL STATE OF CALIFORNIA

THE STATE OF CALIFORNIA OR ITS OFFICERS OR AGENTS SHALL NOT BE RESPONSIBLE FOR THE ACCURACY OR COMPLETENESS OF SCANNED COPIES OF THIS PLAN SHEET.

RBF CONSULTING
14725 ALTON PKWY
IRVINE, CA. 92618-2027

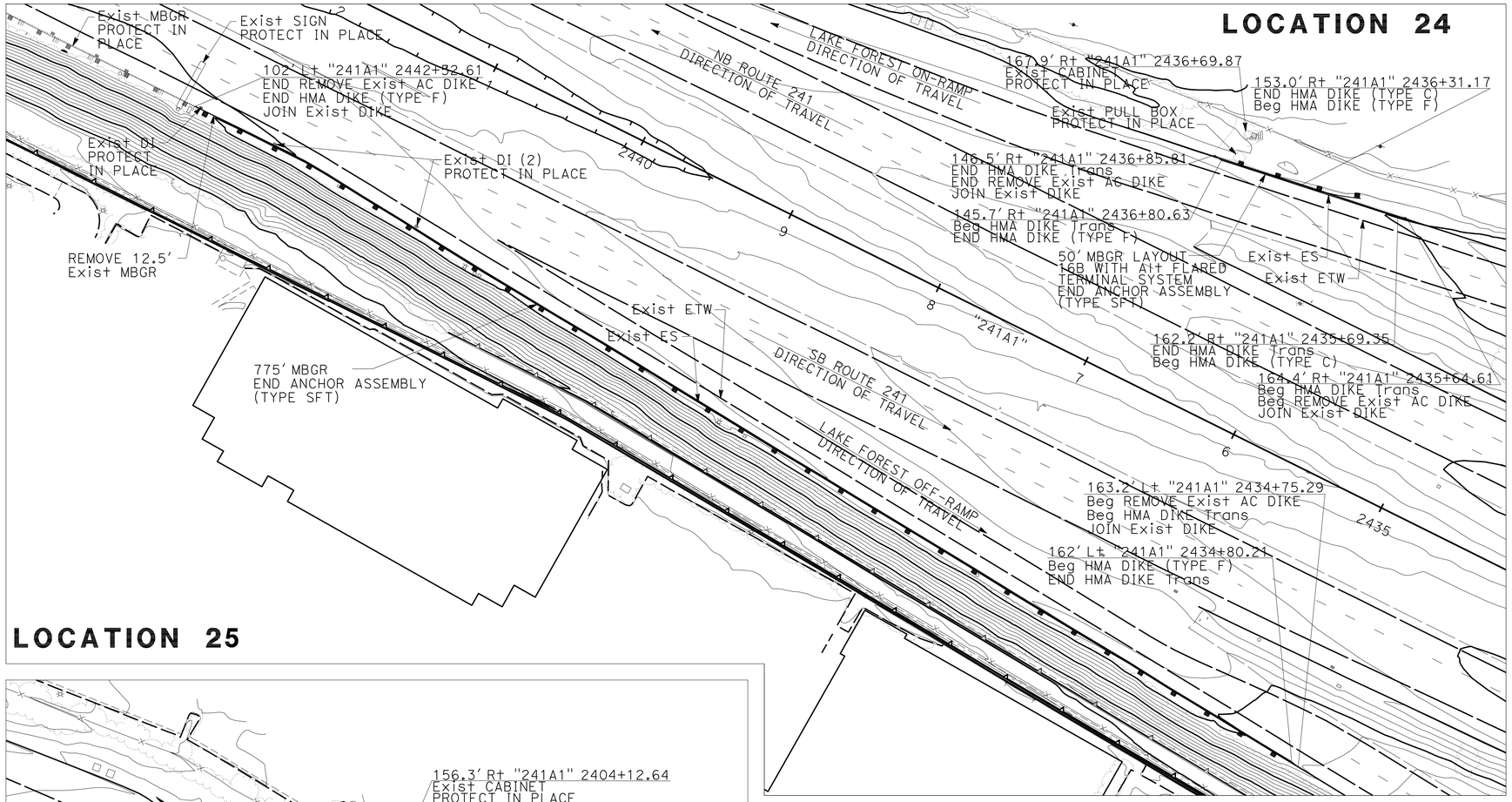

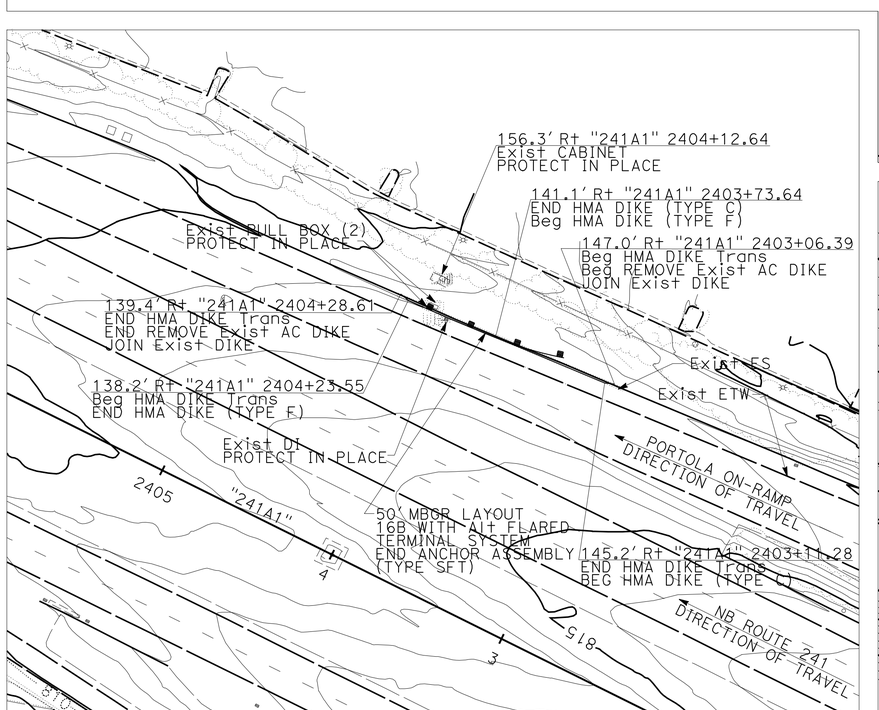

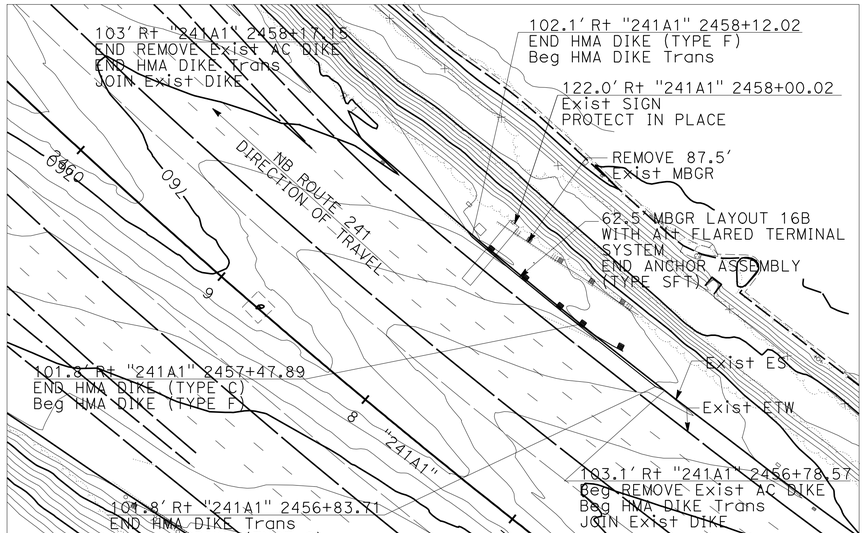

NOTES:

1. FOR LOCATION WITHIN THE PROJECT LIMITS SEE KEY MAP K-1 TO K-3
2. INSTALL GUARD RAILING DELINEATORS AT THE BEGINNING, THE END AND AT 25 Ft INCREMENTS OF EACH MBGR SECTION PER CALTRANS Std PLAN A77C4 AND A73C. TYPE AND QUANTITY ARE LOCATED ON QUANTITY SHEETS Q-20 TO Q-24.

CONSTRUCTION DETAILS
(MBGR UPGRADE DETAIL)
SCALE: 1" = 40'

C-18

REVISED BY	RK/WT		
DATE REVISED	07/22/10		
LINDSAY KAUFMANN			
LINDSAY KAUFMANN			
CALCULATED-DESIGNED BY			
CHECKED BY			
CONSULTANT FUNCTIONAL SUPERVISOR	MIKE CHESNEY		

STATE OF CALIFORNIA - DEPARTMENT OF TRANSPORTATION
Caltrans

H:\pdata\10106739\CADD\TransPW\Div\Merge\8-24-10\c0G370ga018.dgn s135318 19-OCT-2010 13:38

LAST REVISION DATE PLOTTED => 19-OCT-2010
TIME PLOTTED => 13:38
06-08-10

Dist	COUNTY	ROUTE	POST MILES TOTAL PROJECT	SHEET No.	TOTAL SHEETS
12	Ora	241	15.5/39.0	23	117

Lindsay M. Kaufmann 09/01/10
REGISTERED CIVIL ENGINEER DATE

10-18-10
PLANS APPROVAL DATE

REGISTERED PROFESSIONAL ENGINEER LINDSAY M. KAUFMANN No. C71806 Exp.12/31/11 CIVIL STATE OF CALIFORNIA

THE STATE OF CALIFORNIA OR ITS OFFICERS OR AGENTS SHALL NOT BE RESPONSIBLE FOR THE ACCURACY OR COMPLETENESS OF SCANNED COPIES OF THIS PLAN SHEET.

RBF CONSULTING
14725 ALTON PKWY
IRVINE, CA. 92618-2027

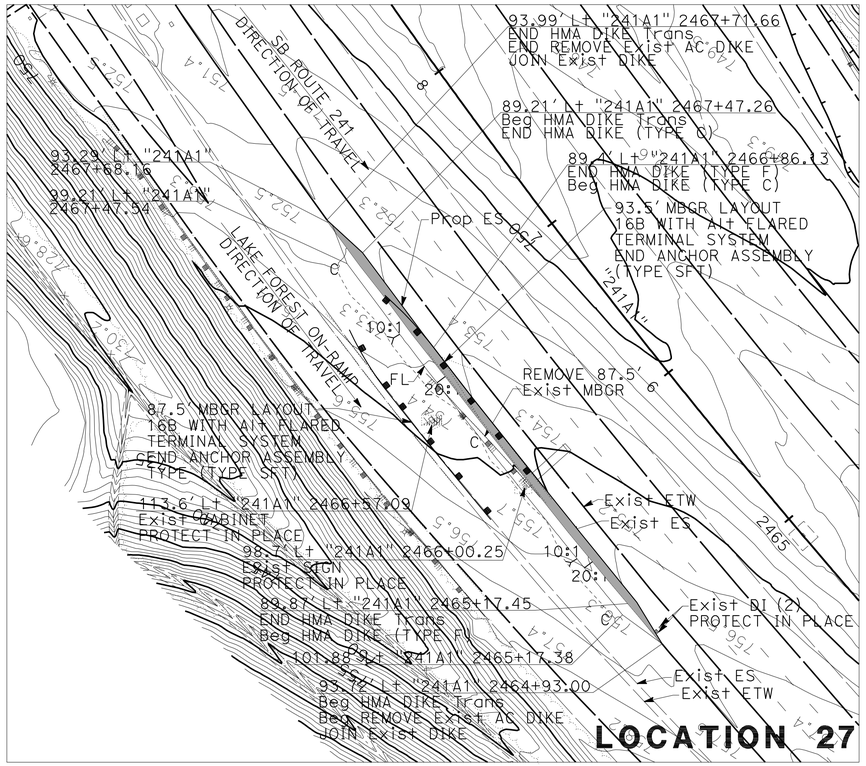

LOCATION 27

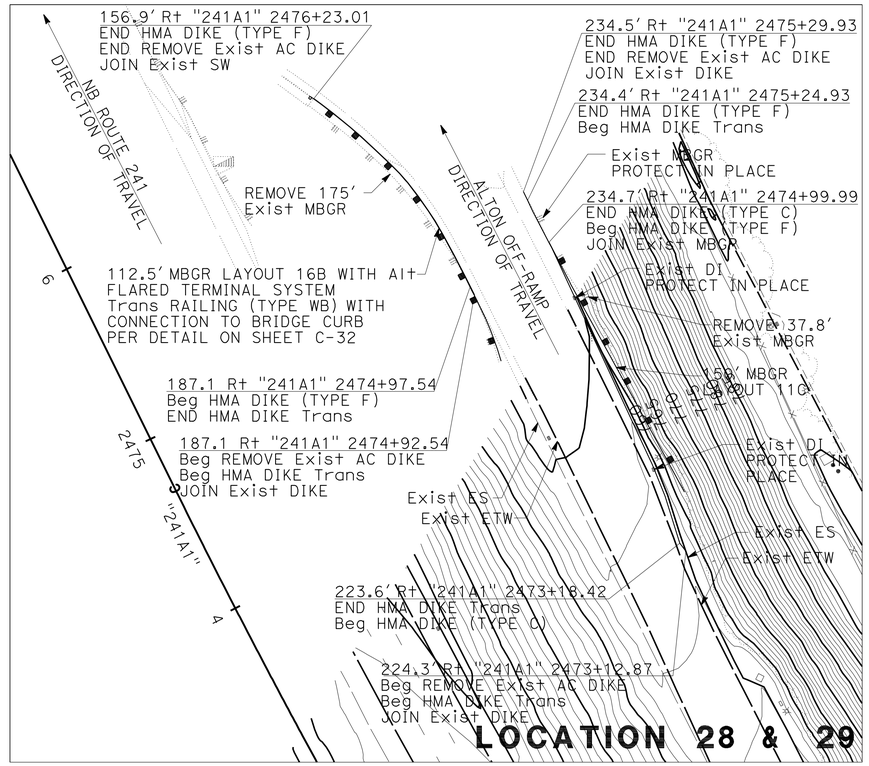

LOCATION 28 & 29

LEGEND:

REMOVE Exist AC PAVEMENT (FOR STATION LIMITS SEE SHEET Q-19)

NOTES:

1. FOR LOCATION WITHIN THE PROJECT LIMITS SEE KEY MAP K-1 TO K-3
2. INSTALL GUARD RAILING DELINEATORS AT THE BEGINNING, THE END AND AT 25 Ft INCREMENTS OF EACH MBGR SECTION PER CALTRANS Std PLAN A77C4 AND A73C. TYPE AND QUANTITY ARE LOCATED ON QUANTITY SHEETS Q-20 TO Q-24.

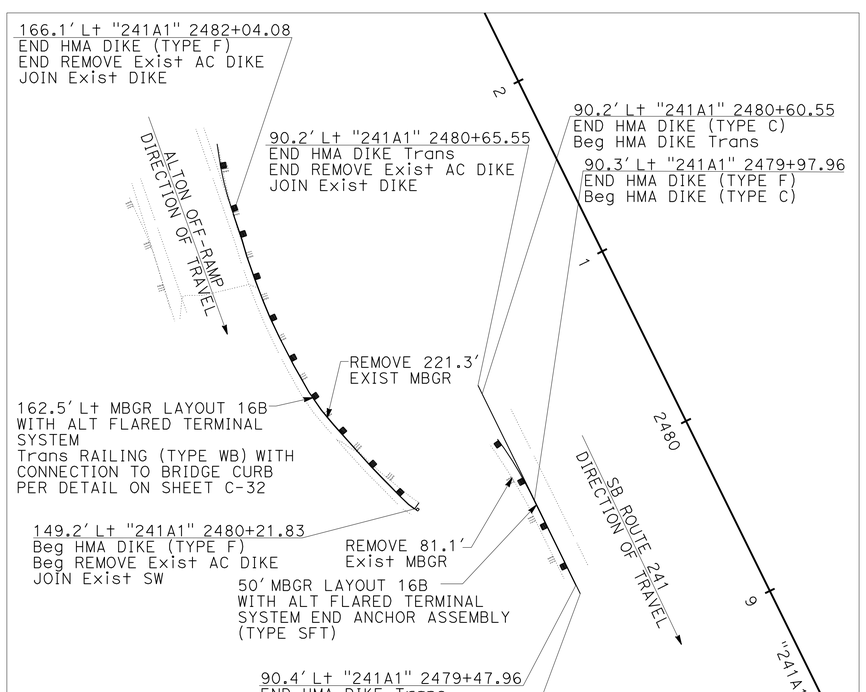

LOCATION 30 & 31

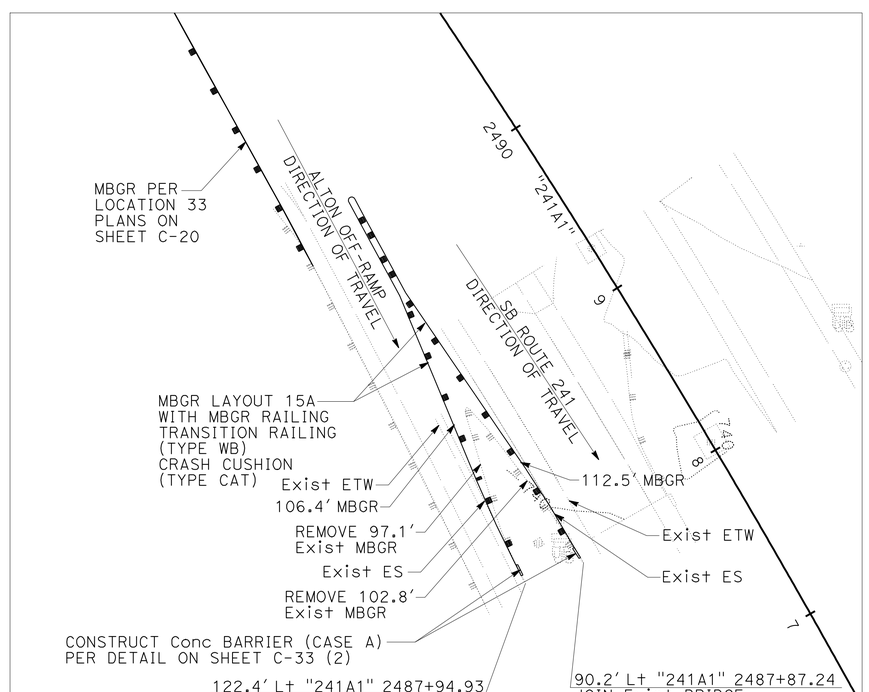

LOCATION 32

CONSTRUCTION DETAILS
(MBGR UPGRADE DETAIL)
SCALE: 1" = 40'

C-19

REVISED BY	DATE REVISED
RK/WT	07/22/10

LINDSAY KAUFMANN — LINDSAY KAUFMANN — CALCULATED-DESIGNED BY — CHECKED BY

CONSULTANT FUNCTIONAL SUPERVISOR: MIKE CHESNEY

STATE OF CALIFORNIA - DEPARTMENT OF TRANSPORTATION — Caltrans

H:\pdata\10106739\CADD\TransPW\Div\Merge\8-24-10\c0G370ga019.dgn 19-OCT-2010 13:38 s135318

LAST REVISION 06-08-10 | DATE PLOTTED => 19-OCT-2010 | TIME PLOTTED => 13:38

Dist	COUNTY	ROUTE	POST MILES TOTAL PROJECT	SHEET No.	TOTAL SHEETS
12	Ora	241	15.5/39.0	24	117

Lindsay M. Kaufmann 09/01/10
REGISTERED CIVIL ENGINEER DATE

10-18-10
PLANS APPROVAL DATE

REGISTERED PROFESSIONAL ENGINEER
LINDSAY M. KAUFMANN
No. C71806
Exp. 12/31/11
CIVIL
STATE OF CALIFORNIA

THE STATE OF CALIFORNIA OR ITS OFFICERS OR AGENTS SHALL NOT BE RESPONSIBLE FOR THE ACCURACY OR COMPLETENESS OF SCANNED COPIES OF THIS PLAN SHEET.

RBF CONSULTING
14725 ALTON PKWY
IRVINE, CA. 92618-2027

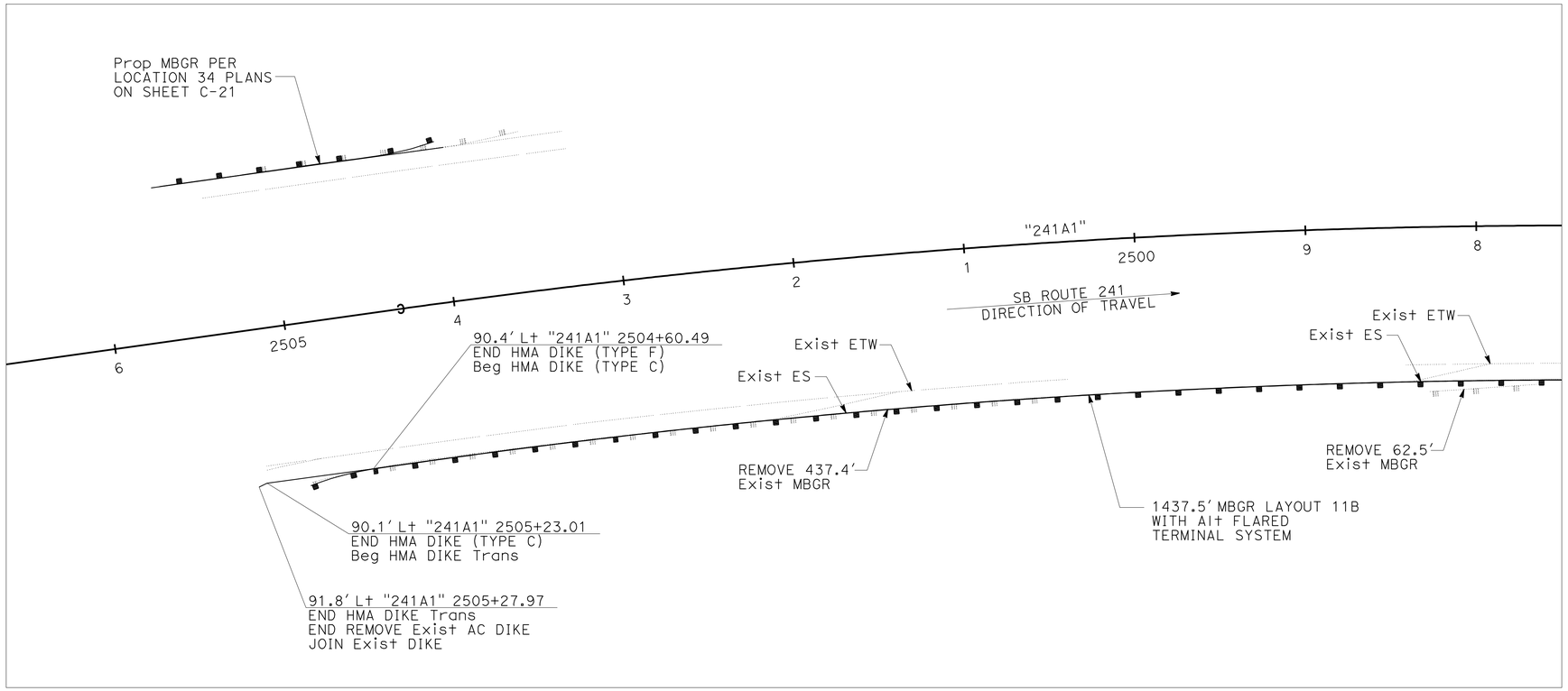

NOTES:

1. FOR LOCATION WITHIN THE PROJECT LIMITS SEE KEY MAP K-1 TO K-3
2. INSTALL GUARD RAILING DELINEATORS AT THE BEGINNING, THE END AND AT 25 Ft INCREMENTS OF EACH MBGR SECTION PER CALTRANS Std PLAN A77C4 AND A73C. TYPE AND QUANTITY ARE LOCATED ON QUANTITY SHEETS Q-20 TO Q-24.

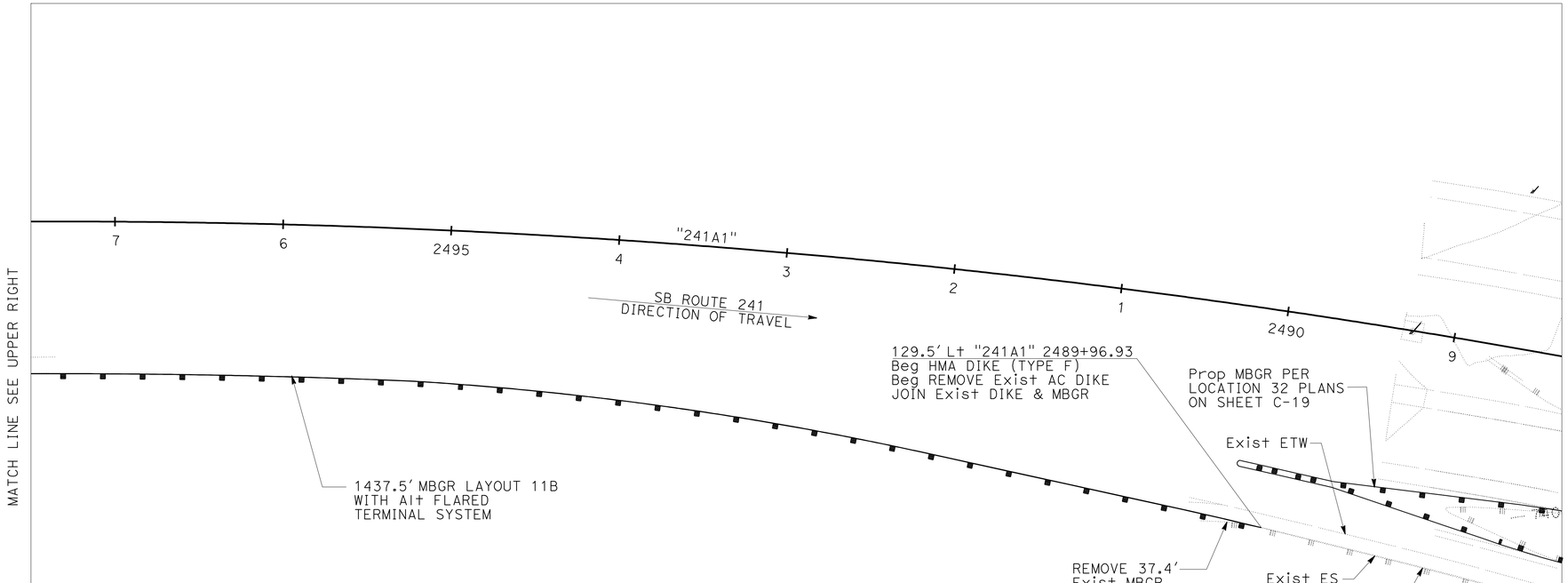

LOCATION 33

CONSTRUCTION DETAILS
(MBGR UPGRADE DETAIL)
SCALE: 1" = 40'

C-20

STATE OF CALIFORNIA - DEPARTMENT OF TRANSPORTATION
Caltrans

CONSULTANT FUNCTIONAL SUPERVISOR: MIKE CHESNEY
CALCULATED-DESIGNED BY: LINDSAY KAUFMANN
CHECKED BY: LINDSAY KAUFMANN
REVISED BY: RK/WT
DATE REVISED: 07/22/10

H:\pdata\10106739\CADD\TransPW\Div\Merge\8-24-10\c0G370ga020.dgn
s135318 19-OCT-2010 13:38

LAST REVISION 06-08-10
DATE PLOTTED => 19-OCT-2010
TIME PLOTTED => 13:38

Dist	COUNTY	ROUTE	POST MILES TOTAL PROJECT	SHEET No.	TOTAL SHEETS
12	Ora	241	15.5/39.0	25	117

Lindsay M. Kaufmann 09/01/10
REGISTERED CIVIL ENGINEER DATE

10-18-10
PLANS APPROVAL DATE

REGISTERED PROFESSIONAL ENGINEER LINDSAY M. KAUFMANN No. C71806 Exp. 12/31/11 CIVIL STATE OF CALIFORNIA

THE STATE OF CALIFORNIA OR ITS OFFICERS OR AGENTS SHALL NOT BE RESPONSIBLE FOR THE ACCURACY OR COMPLETENESS OF SCANNED COPIES OF THIS PLAN SHEET.

RBF CONSULTING
14725 ALTON PKWY
IRVINE, CA. 92618-2027

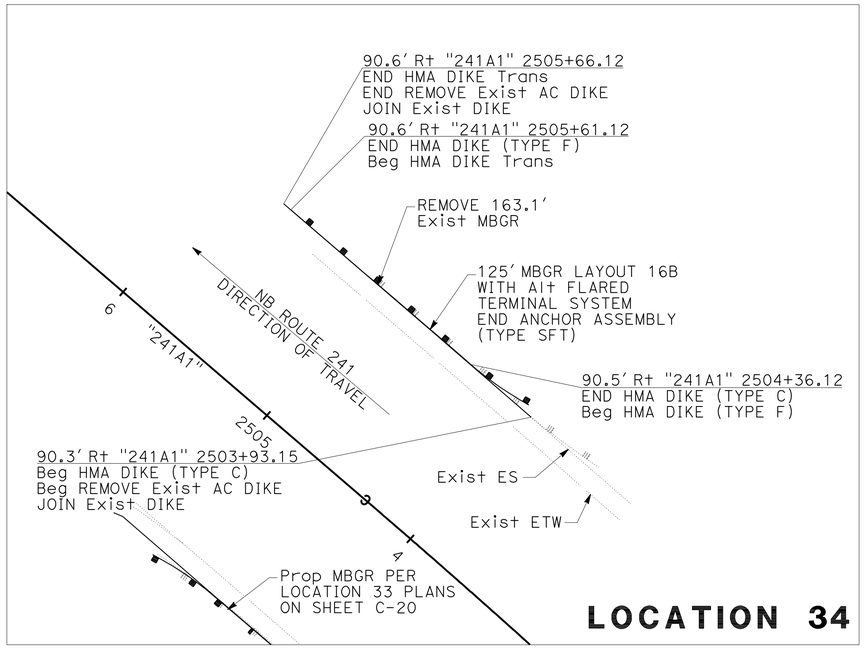

LOCATION 34

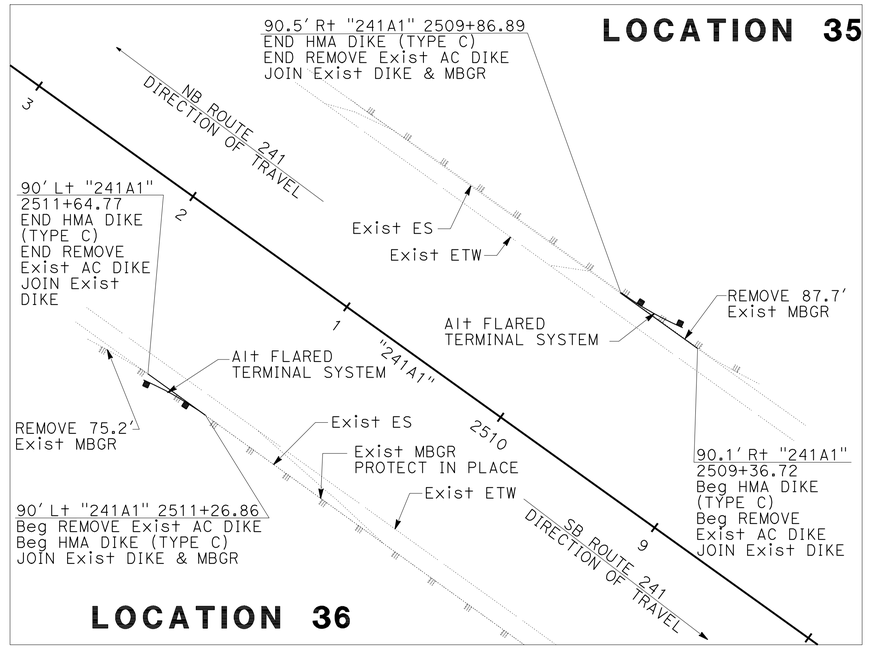

LOCATION 36

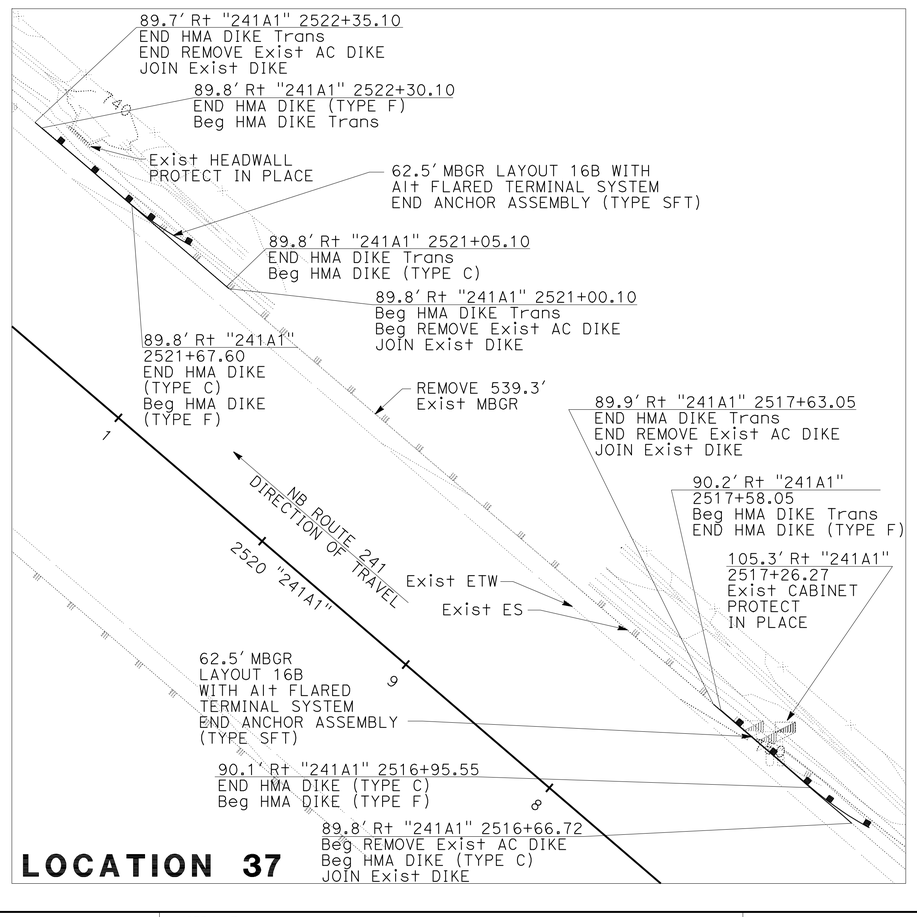

LOCATION 37

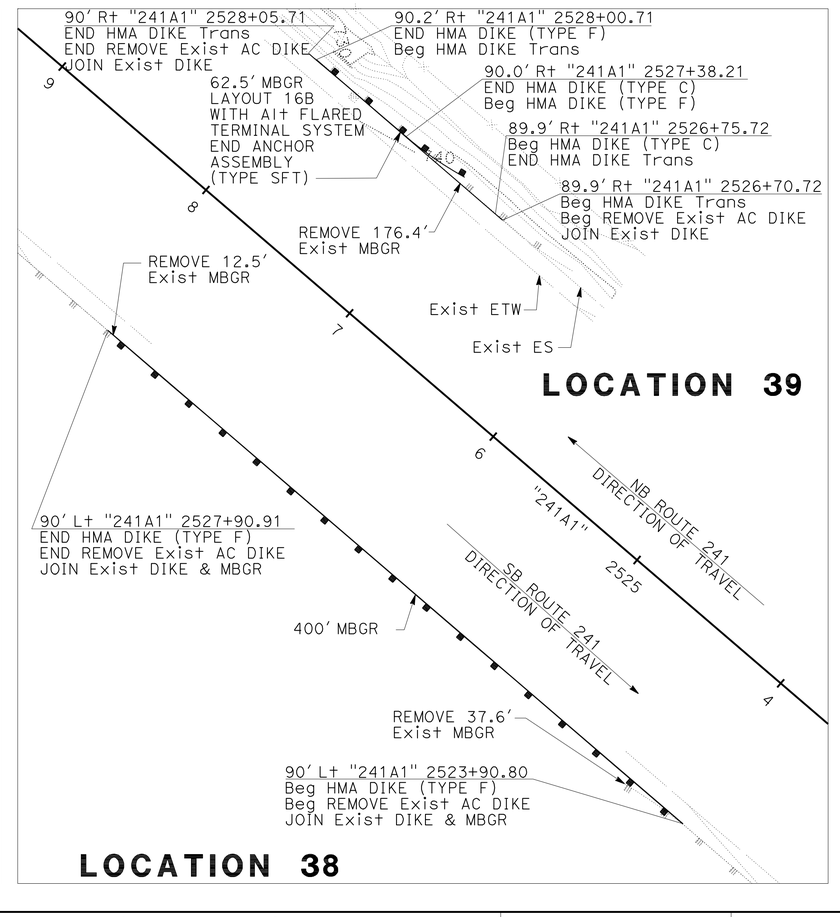

LOCATION 38

NOTES:

1. FOR LOCATION WITHIN THE PROJECT LIMITS SEE KEY MAP K-1 TO K-3
2. INSTALL GUARD RAILING DELINEATORS AT THE BEGINNING, THE END AND AT 25 Ft INCREMENTS OF EACH MBGR SECTION PER CALTRANS Std PLAN A77C4 AND A73C. TYPE AND QUANTITY ARE LOCATED ON QUANTITY SHEETS Q-20 TO Q-24.

CONSTRUCTION DETAILS

(MBGR UPGRADE DETAIL)

SCALE: 1" = 40'

C-21

REVISED BY	RK/WT		
DATE REVISED	07/22/10		
LINDSAY KAUFMANN	LINDSAY KAUFMANN	19-OCT-2010 13:38	
CALCULATED-DESIGNED BY	CHECKED BY	s135318	
CONSULTANT FUNCTIONAL SUPERVISOR	MIKE CHESNEY		

STATE OF CALIFORNIA - DEPARTMENT OF TRANSPORTATION

Caltrans

H:\pdata\10106739\CADD\TransPW\Div\Merge\8-24-10\c0G370ga021.dgn

LAST REVISION DATE PLOTTED => 19-OCT-2010
06-08-10 TIME PLOTTED => 13:38

Dist	COUNTY	ROUTE	POST MILES TOTAL PROJECT	SHEET No.	TOTAL SHEETS
12	Ora	241	15.5/39.0	26	117

Lindsay M. Kaufmann 09/01/10
REGISTERED CIVIL ENGINEER DATE

10-18-10
PLANS APPROVAL DATE

REGISTERED PROFESSIONAL ENGINEER LINDSAY M. KAUFMANN No. C71806 Exp.12/31/11 CIVIL STATE OF CALIFORNIA

THE STATE OF CALIFORNIA OR ITS OFFICERS OR AGENTS SHALL NOT BE RESPONSIBLE FOR THE ACCURACY OR COMPLETENESS OF SCANNED COPIES OF THIS PLAN SHEET.

RBF CONSULTING
14725 ALTON PKWY
IRVINE, CA. 92618-2027

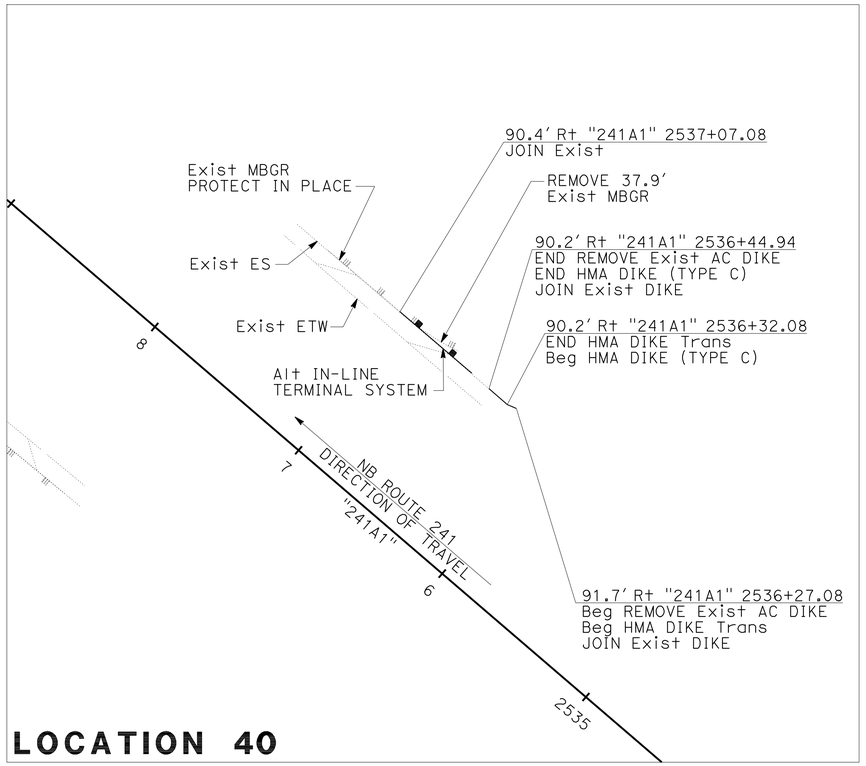

LOCATION 40

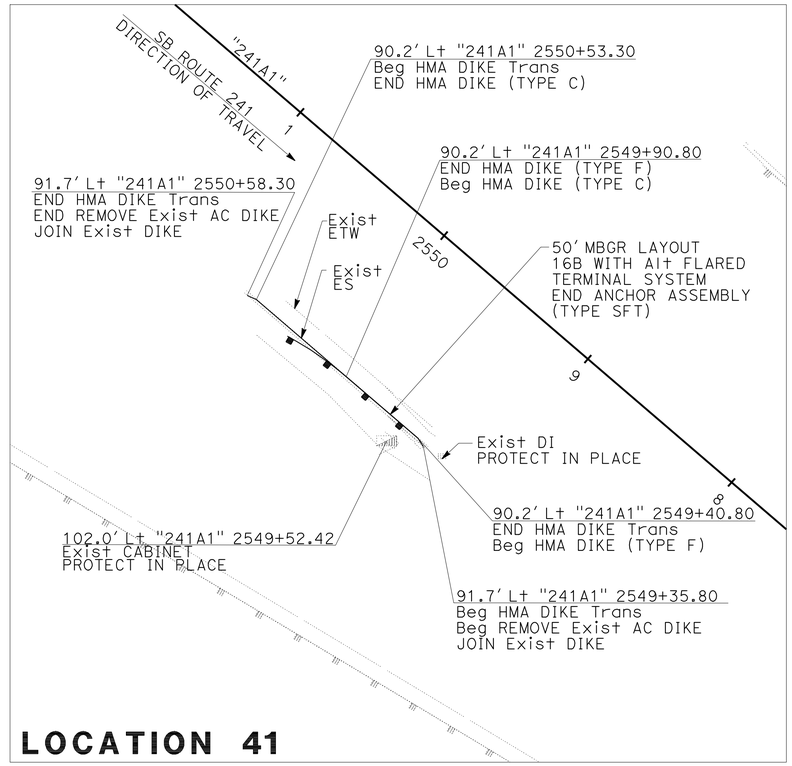

LOCATION 41

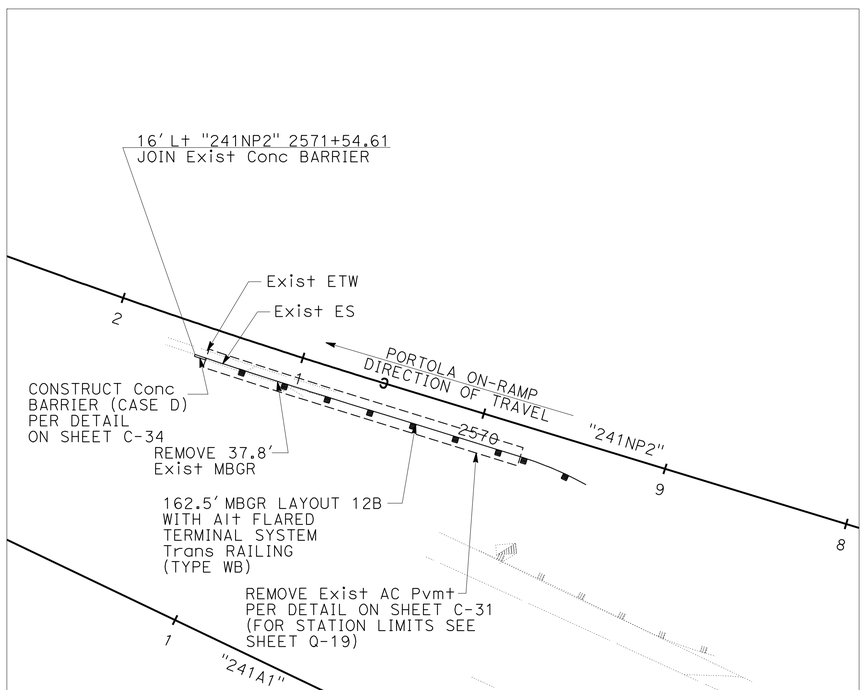

LOCATION 42

NOTES:

1. FOR LOCATION WITHIN THE PROJECT LIMITS SEE KEY MAP K-1 TO K-3
2. INSTALL GUARD RAILING DELINEATORS AT THE BEGINNING, THE END AND AT 25 Ft INCREMENTS OF EACH MBGR SECTION PER CALTRANS Std PLAN A77C4 AND A73C. TYPE AND QUANTITY ARE LOCATED ON QUANTITY SHEETS Q-20 TO Q-24.

CONSTRUCTION DETAILS
(MBGR UPGRADE DETAIL)
SCALE: 1" = 40'

C-22

REVISED BY	DATE REVISED
RK/WT	07/22/10

CALCULATED-DESIGNED BY	LINDSAY KAUFMANN
CHECKED BY	LINDSAY KAUFMANN
CONSULTANT FUNCTIONAL SUPERVISOR	MIKE CHESNEY

STATE OF CALIFORNIA - DEPARTMENT OF TRANSPORTATION
Caltrans

H:\pdata\10106739\CADD\TransPW\Div\Merge\8-24-10\c0G370ga022.dgn s135318 19-OCT-2010 13:38

LAST REVISION 06-08-10 | DATE PLOTTED => 19-OCT-2010 | TIME PLOTTED => 13:38

Dist	COUNTY	ROUTE	POST MILES TOTAL PROJECT	SHEET No.	TOTAL SHEETS
12	Ora	241	15.5/39.0	27	117

Lindsay M. Kaufmann 09/01/10
REGISTERED CIVIL ENGINEER DATE

10-18-10
PLANS APPROVAL DATE

REGISTERED PROFESSIONAL ENGINEER LINDSAY M. KAUFMANN No. C71806 Exp. 12/31/11 CIVIL STATE OF CALIFORNIA

THE STATE OF CALIFORNIA OR ITS OFFICERS OR AGENTS SHALL NOT BE RESPONSIBLE FOR THE ACCURACY OR COMPLETENESS OF SCANNED COPIES OF THIS PLAN SHEET.

RBF CONSULTING
14725 ALTON PKWY
IRVINE, CA. 92618-2027

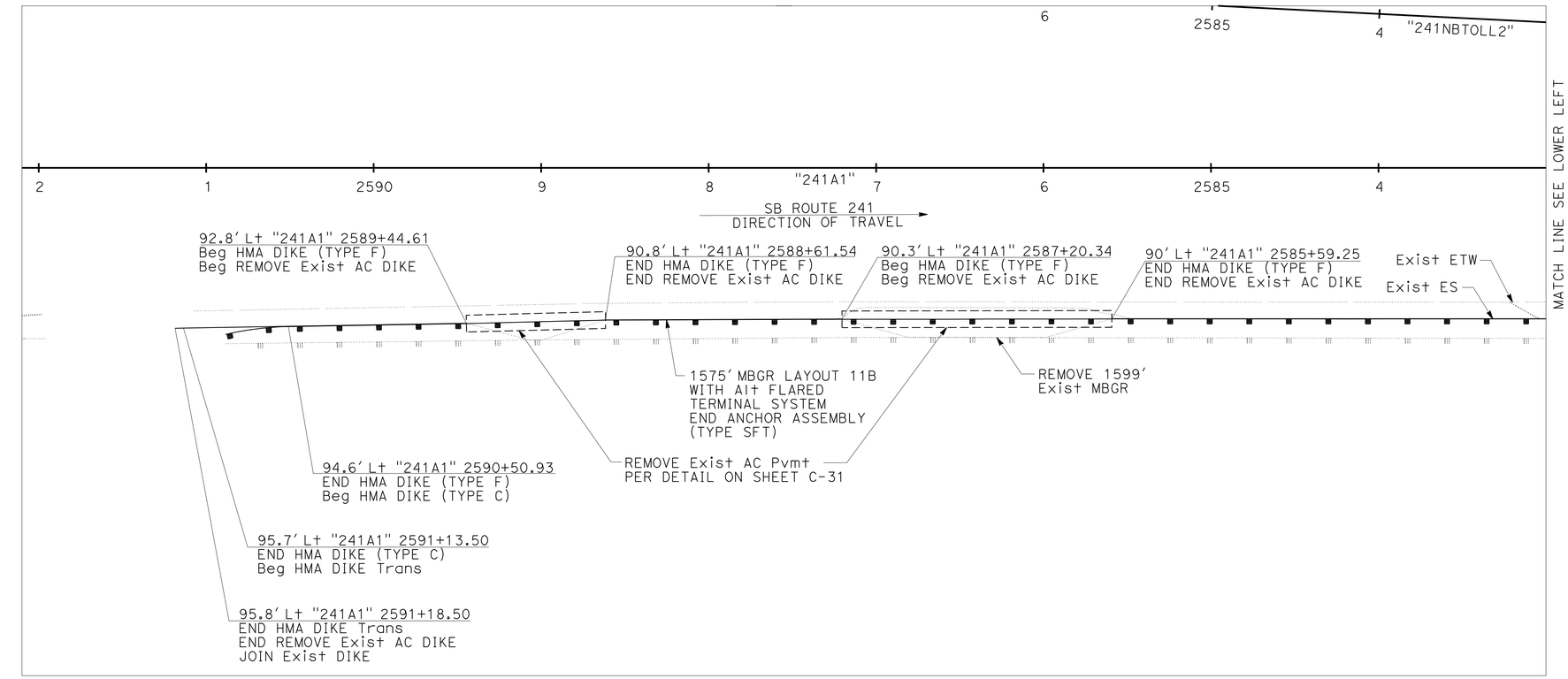

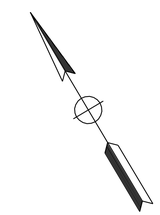

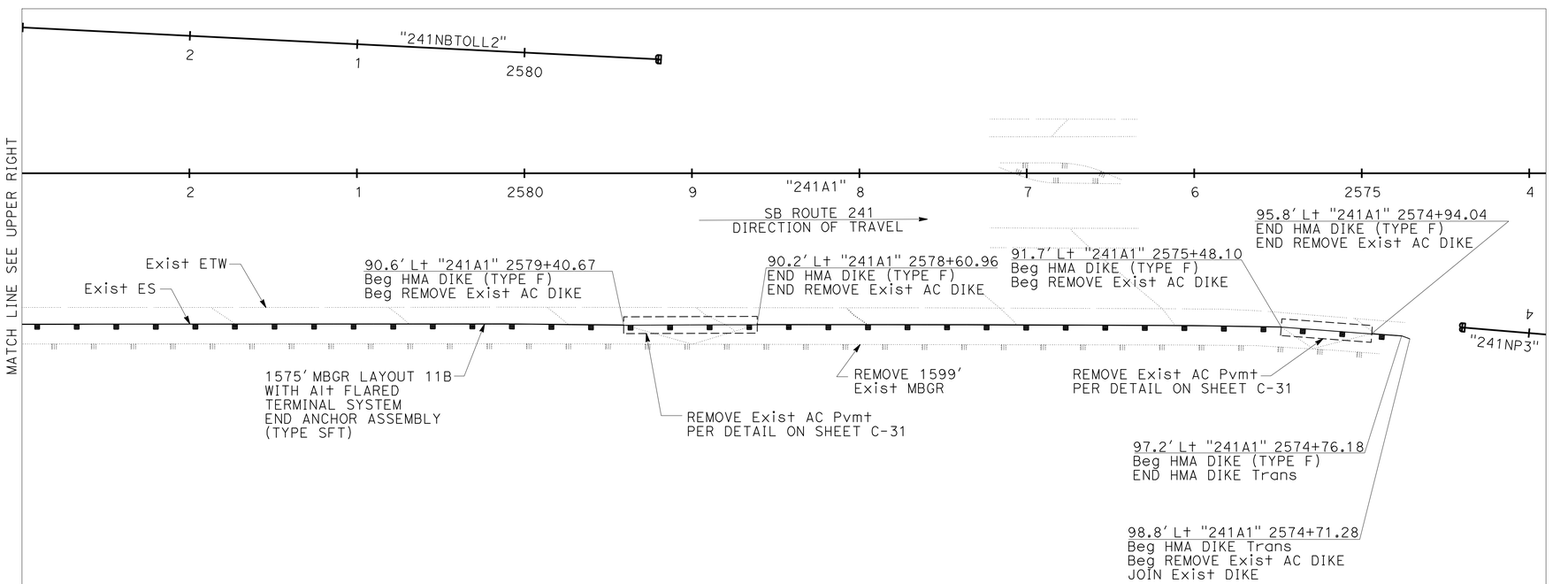

NOTES:

1. FOR LOCATION WITHIN THE PROJECT LIMITS SEE KEY MAP K-1 TO K-3
2. INSTALL GUARD RAILING DELINEATORS AT THE BEGINNING, THE END AND AT 25 Ft INCREMENTS OF EACH MBGR SECTION PER CALTRANS Std PLAN A77C4 AND A73C. TYPE AND QUANTITY ARE LOCATED ON QUANTITY SHEETS Q-20 TO Q-24.

CONSTRUCTION DETAILS
(MBGR UPGRADE DETAIL)
SCALE: 1" = 40'

LOCATION 43

C-23

REVISED BY	DATE REVISED
RK/WT	07/22/10

CALCULATED-DESIGNED BY: LINDSAY KAUFMANN
CHECKED BY: LINDSAY KAUFMANN
CONSULTANT FUNCTIONAL SUPERVISOR: MIKE CHESNEY

STATE OF CALIFORNIA - DEPARTMENT OF TRANSPORTATION
Caltrans

H:\pdata\10106739\CADD\TransPW\Div\Merge\8-24-10\c0G370ga023.dgn
s135318 19-OCT-2010 13:38

LAST REVISION 06-08-10 | DATE PLOTTED => 19-OCT-2010 | TIME PLOTTED => 13:38

Dist	COUNTY	ROUTE	POST MILES TOTAL PROJECT	SHEET No.	TOTAL SHEETS
12	Ora	241	15.5/39.0	28	117

Lindsay M. Kaufmann — REGISTERED CIVIL ENGINEER — DATE 09/01/10

10-18-10
PLANS APPROVAL DATE

REGISTERED PROFESSIONAL ENGINEER — LINDSAY M. KAUFMANN No. C71806 Exp. 12/31/11 CIVIL — STATE OF CALIFORNIA

THE STATE OF CALIFORNIA OR ITS OFFICERS OR AGENTS SHALL NOT BE RESPONSIBLE FOR THE ACCURACY OR COMPLETENESS OF SCANNED COPIES OF THIS PLAN SHEET.

RBF CONSULTING
14725 ALTON PKWY
IRVINE, CA. 92618-2027

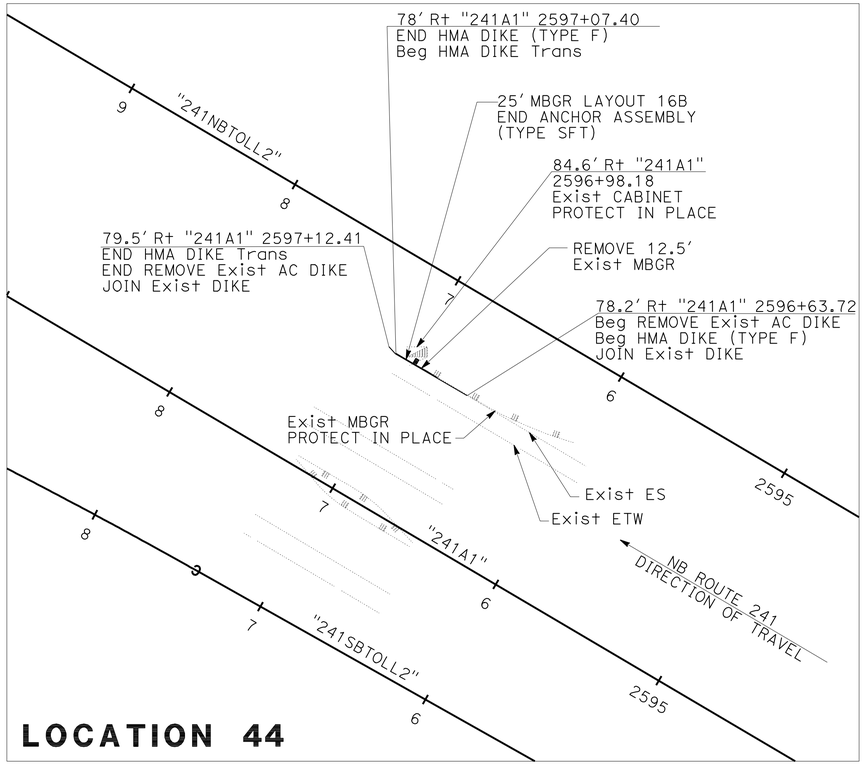

LOCATION 44

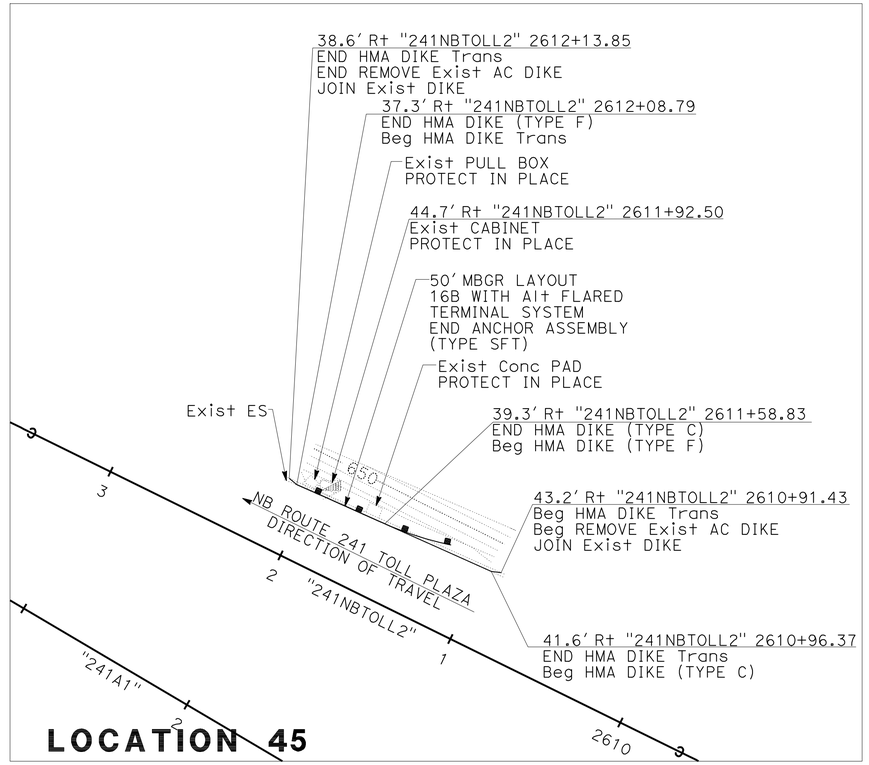

LOCATION 45

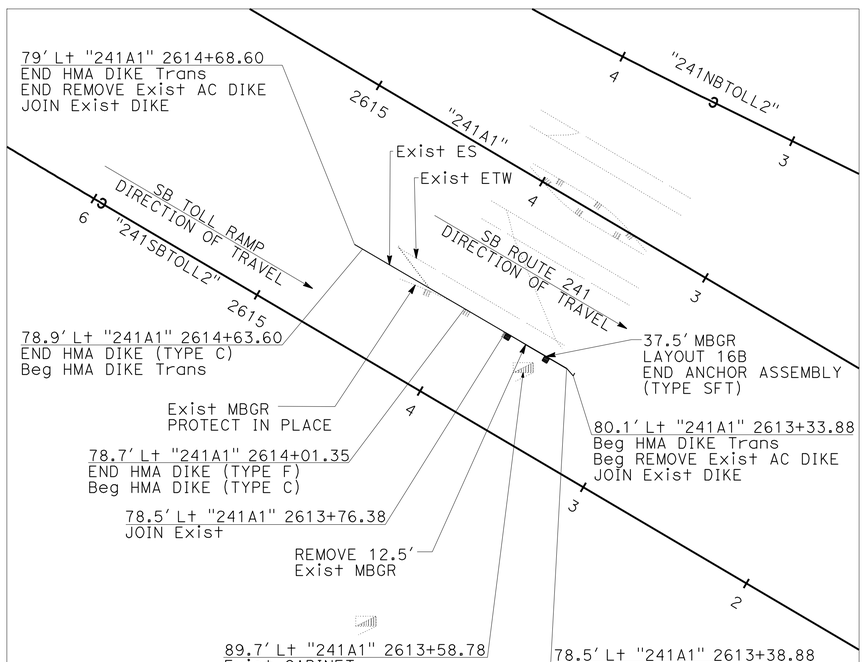

LOCATION 46

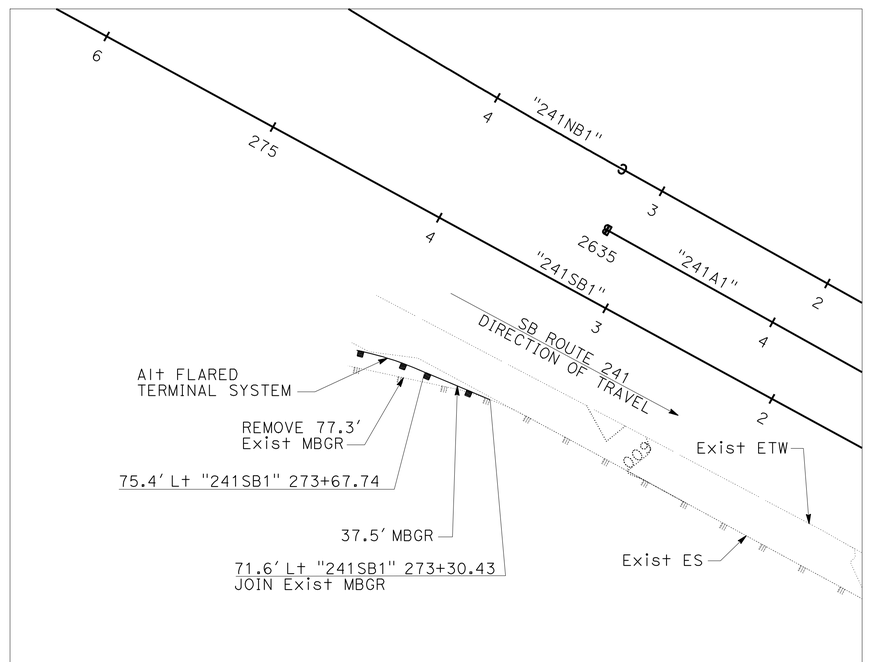

LOCATION 47

NOTES:

1. FOR LOCATION WITHIN THE PROJECT LIMITS SEE KEY MAP K-1 TO K-3
2. INSTALL GUARD RAILING DELINEATORS AT THE BEGINNING, THE END AND AT 25 Ft INCREMENTS OF EACH MBGR SECTION PER CALTRANS Std PLAN A77C4 AND A73C. TYPE AND QUANTITY ARE LOCATED ON QUANTITY SHEETS Q-20 TO Q-24.

CONSTRUCTION DETAILS
(MBGR UPGRADE DETAIL)
SCALE: 1" = 40'

C-24

STATE OF CALIFORNIA - DEPARTMENT OF TRANSPORTATION — Caltrans

CONSULTANT FUNCTIONAL SUPERVISOR: MIKE CHESNEY

CALCULATED-DESIGNED BY: LINDSAY KAUFMANN — REVISED BY: RK/WT
CHECKED BY: LINDSAY KAUFMANN — DATE REVISED: 07/22/10

s135318 19-OCT-2010 13:38

H:\pdata\10106739\CADD\TransPW\Div\Merge\8-24-10\c0G370ga024.dgn

LAST REVISION 06-08-10 — DATE PLOTTED => 19-OCT-2010 — TIME PLOTTED => 13:38

Dist	COUNTY	ROUTE	POST MILES TOTAL PROJECT	SHEET No.	TOTAL SHEETS
12	Ora	241	15.5/39.0	29	117

Lindsay M. Kaufmann 09/01/10
REGISTERED CIVIL ENGINEER DATE

10-18-10
PLANS APPROVAL DATE

REGISTERED PROFESSIONAL ENGINEER LINDSAY M. KAUFMANN No. C71806 Exp.12/31/11 CIVIL STATE OF CALIFORNIA

THE STATE OF CALIFORNIA OR ITS OFFICERS OR AGENTS SHALL NOT BE RESPONSIBLE FOR THE ACCURACY OR COMPLETENESS OF SCANNED COPIES OF THIS PLAN SHEET.

RBF CONSULTING
14725 ALTON PKWY
IRVINE, CA. 92618-2027

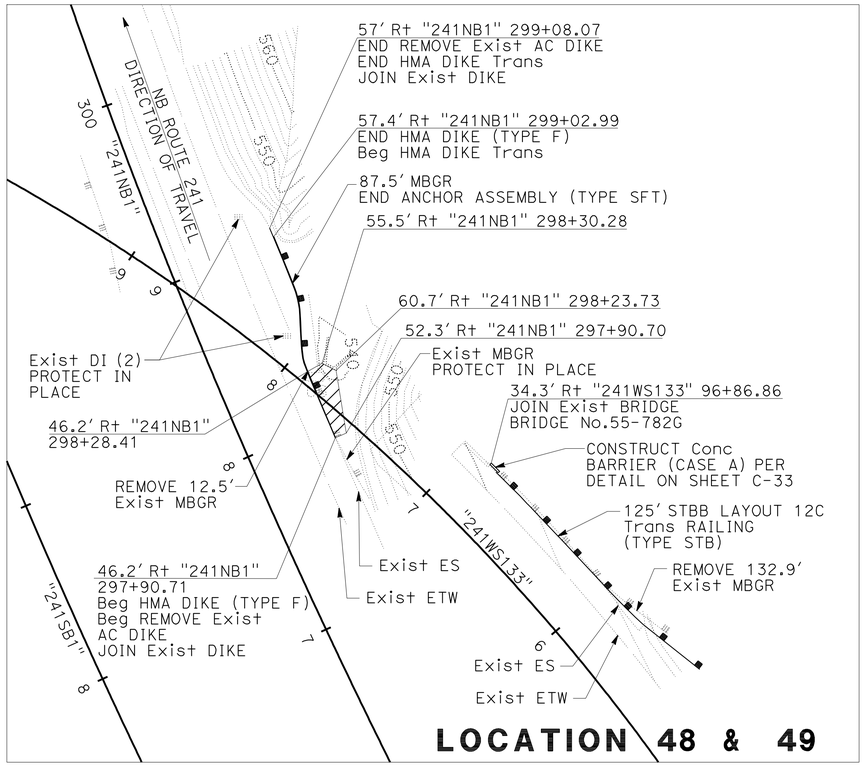

LOCATION 48 & 49

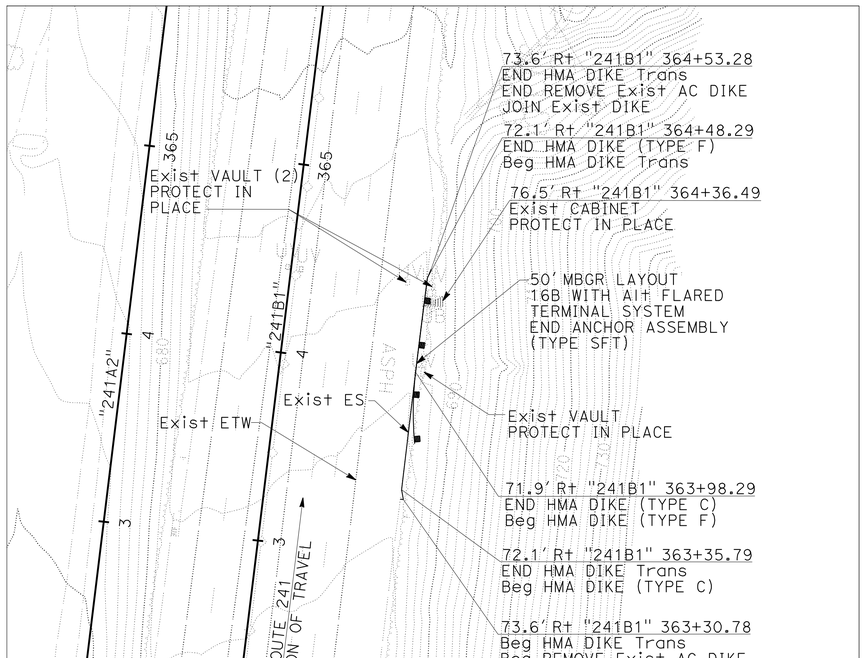

LOCATION 51

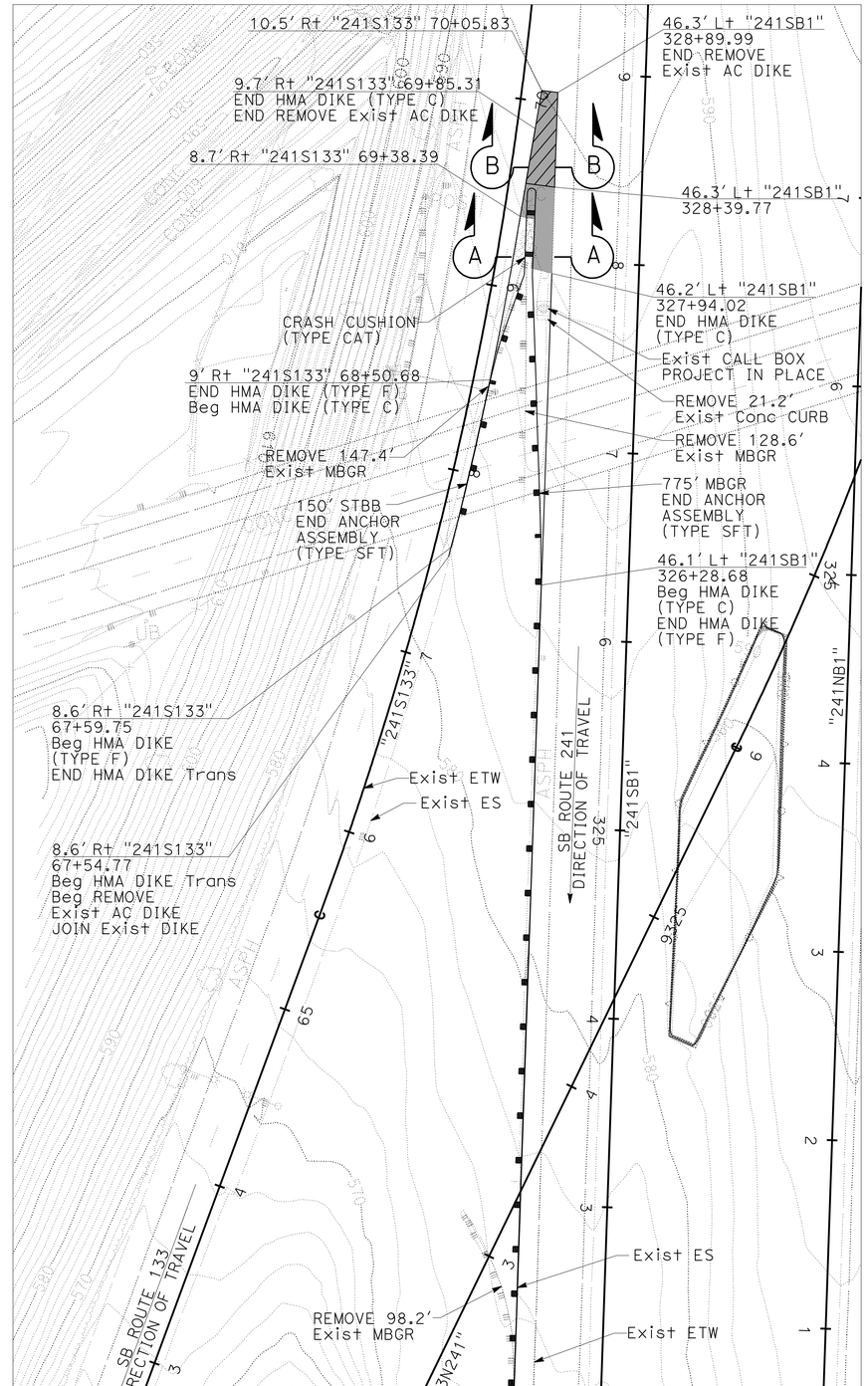

LOCATION 50

MATCH LINE SEE RIGHT

LEGEND:

REMOVE Exist AC PAVEMENT

PLACE 2" Misc HMA

NOTES:

1. FOR LOCATION WITHIN THE PROJECT LIMITS SEE KEY MAP K-1 TO K-3
2. INSTALL GUARD RAILING DELINEATORS AT THE BEGINNING, THE END AND AT 25 Ft INCREMENTS OF EACH MBGR SECTION PER CALTRANS Std PLAN A77C4 AND A73C. TYPE AND QUANTITY ARE LOCATED ON QUANTITY SHEETS Q-20 TO Q-24.

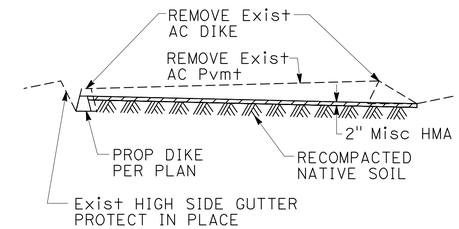

SECTION B-B

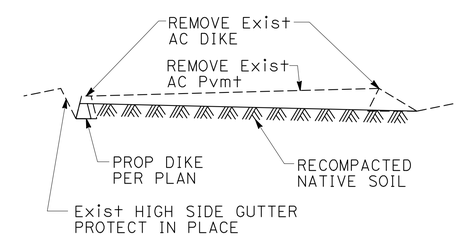

SECTION A-A

NOTE: MBGR NOT SHOWN FOR CLARITY

MATCH LINE SEE LOCATION 50 LOWER LEFT

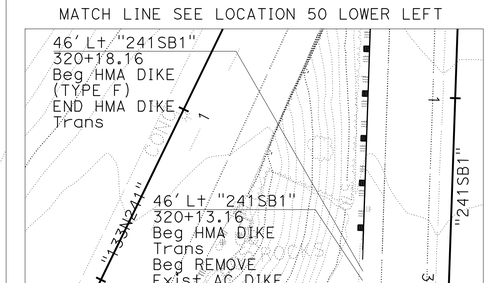

CONSTRUCTION DETAILS

(MBGR UPGRADE DETAIL)

SCALE: 1" = 40'

C-25

STATE OF CALIFORNIA - DEPARTMENT OF TRANSPORTATION

Caltrans

CONSULTANT FUNCTIONAL SUPERVISOR: MIKE CHESNEY

CALCULATED-DESIGNED BY: LINDSAY KAUFMANN

CHECKED BY: LINDSAY KAUFMANN

REVISED BY: RK/WT

DATE REVISED: 07/22/10

s135318 19-OCT-2010 13:38

H:\pdata\10106739\CADD\TransPW\Div\Merge\8-24-10\c0G370ga025.dgn

LAST REVISION 06-08-10 | DATE PLOTTED => 19-OCT-2010 | TIME PLOTTED => 13:38

Dist	COUNTY	ROUTE	POST MILES TOTAL PROJECT	SHEET No.	TOTAL SHEETS
12	Ora	241	15.5/39.0	30	117

Lindsay M. Kaufmann 09/01/10
REGISTERED CIVIL ENGINEER DATE

10-18-10
PLANS APPROVAL DATE

REGISTERED PROFESSIONAL ENGINEER LINDSAY M. KAUFMANN No. C71806 Exp. 12/31/11 CIVIL STATE OF CALIFORNIA

THE STATE OF CALIFORNIA OR ITS OFFICERS OR AGENTS SHALL NOT BE RESPONSIBLE FOR THE ACCURACY OR COMPLETENESS OF SCANNED COPIES OF THIS PLAN SHEET.

RBF CONSULTING
14725 ALTON PKWY
IRVINE, CA. 92618-2027

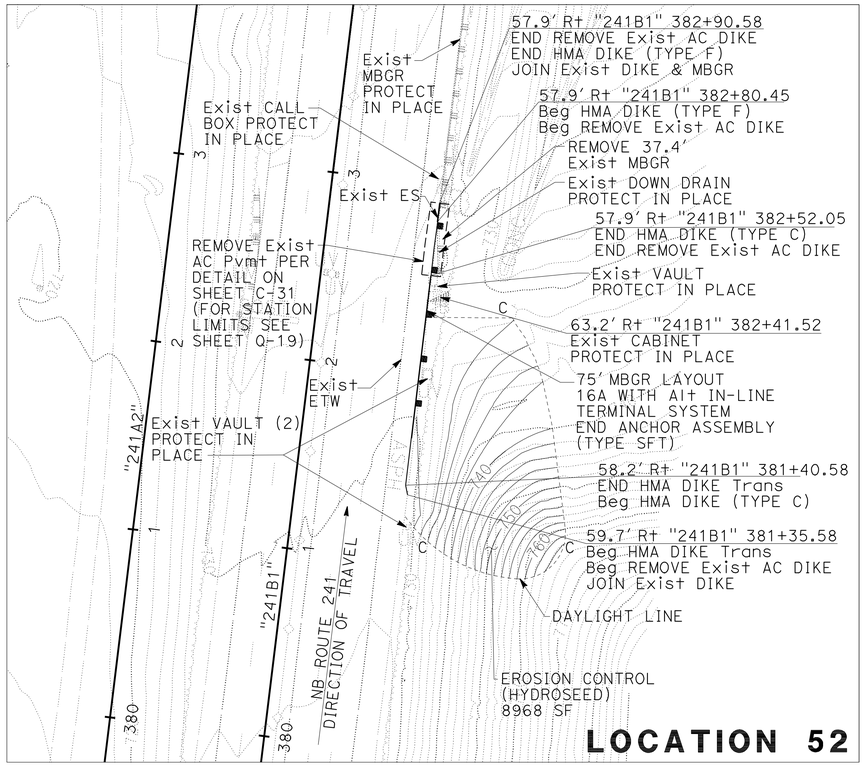

LOCATION 52

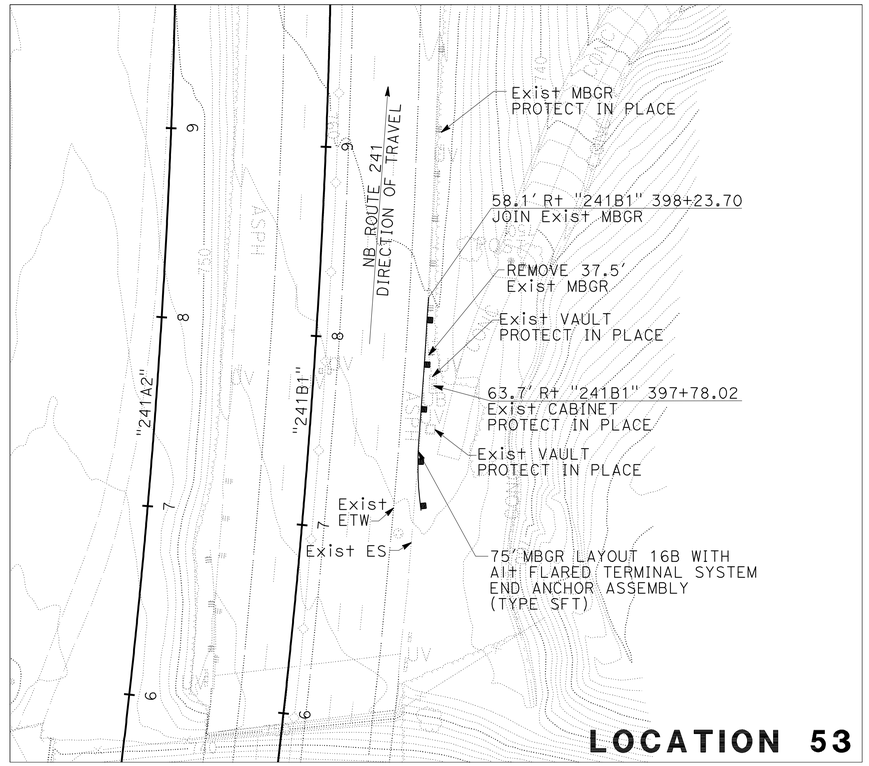

LOCATION 53

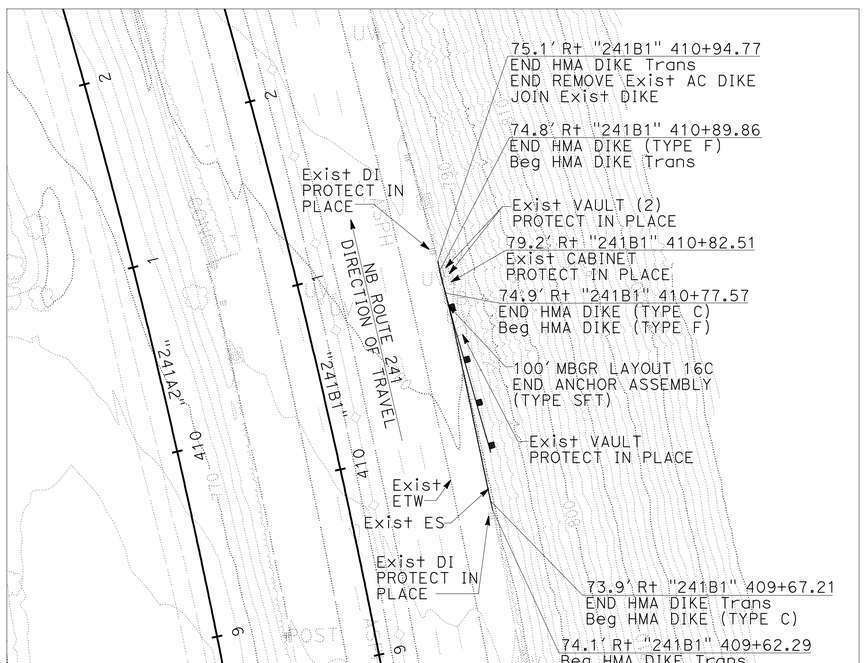

LOCATION 54

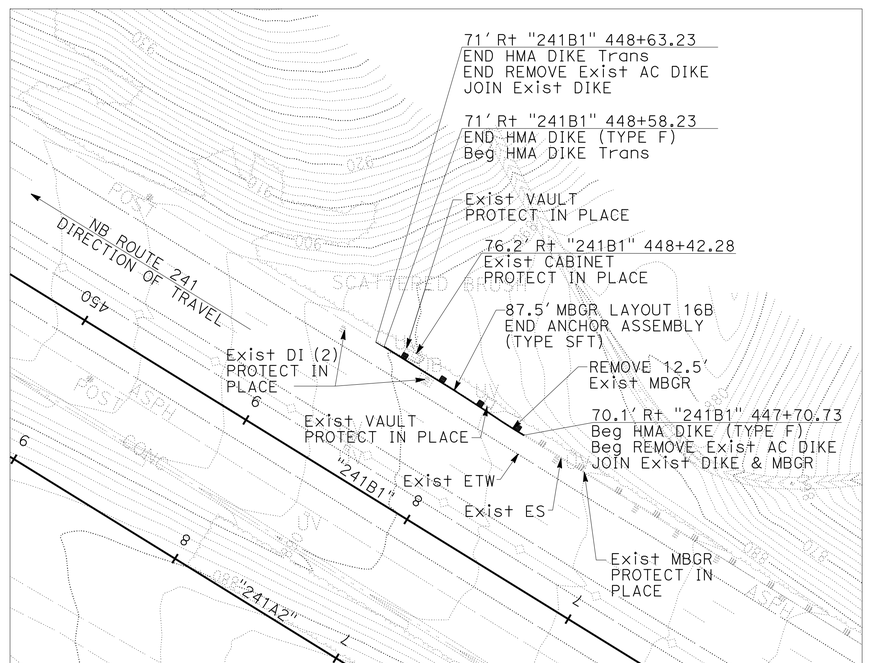

LOCATION 55

NOTES:

1. FOR LOCATION WITHIN THE PROJECT LIMITS SEE KEY MAP K-1 TO K-3
2. INSTALL GUARD RAILING DELINEATORS AT THE BEGINNING, THE END AND AT 25 Ft INCREMENTS OF EACH MBGR SECTION PER CALTRANS Std PLAN A77C4 AND A73C. TYPE AND QUANTITY ARE LOCATED ON QUANTITY SHEETS Q-20 TO Q-24.

CONSTRUCTION DETAILS
(MBGR UPGRADE DETAIL)
SCALE: 1" = 40'

C-26

REVISED BY	DATE REVISED
RK/WT	07/22/10

s135318 19-OCT-2010 13:38
H:\pdata\10106739\CADD\TransPW\Div\Merge\8-24-10\c06370ga026.dgn

CALCULATED-DESIGNED BY	LINDSAY KAUFMANN
CHECKED BY	LINDSAY KAUFMANN
CONSULTANT FUNCTIONAL SUPERVISOR	MIKE CHESNEY

STATE OF CALIFORNIA - DEPARTMENT OF TRANSPORTATION
Caltrans

LAST REVISION 06-08-10
DATE PLOTTED => 19-OCT-2010
TIME PLOTTED => 13:38

Dist	COUNTY	ROUTE	POST MILES TOTAL PROJECT	SHEET No.	TOTAL SHEETS
12	Ora	241	15.5/39.0	31	117

Lindsay M. Kaufmann 09/01/10
REGISTERED CIVIL ENGINEER DATE

10-18-10
PLANS APPROVAL DATE

REGISTERED PROFESSIONAL ENGINEER LINDSAY M. KAUFMANN No. C71806 Exp. 12/31/11 CIVIL STATE OF CALIFORNIA

THE STATE OF CALIFORNIA OR ITS OFFICERS OR AGENTS SHALL NOT BE RESPONSIBLE FOR THE ACCURACY OR COMPLETENESS OF SCANNED COPIES OF THIS PLAN SHEET.

RBF CONSULTING
14725 ALTON PKWY
IRVINE, CA. 92618-2027

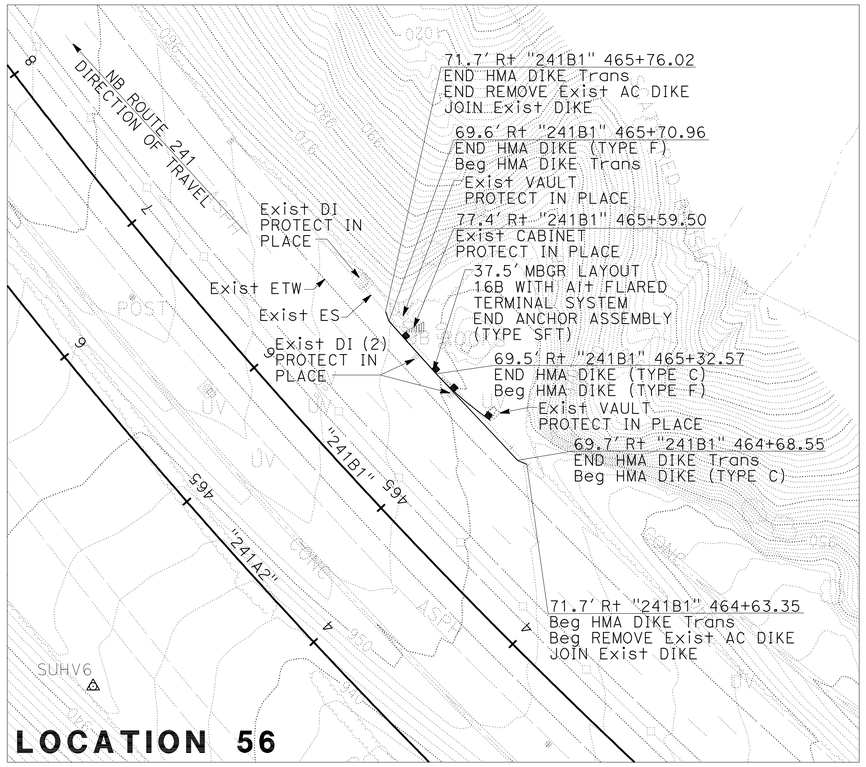

LOCATION 56

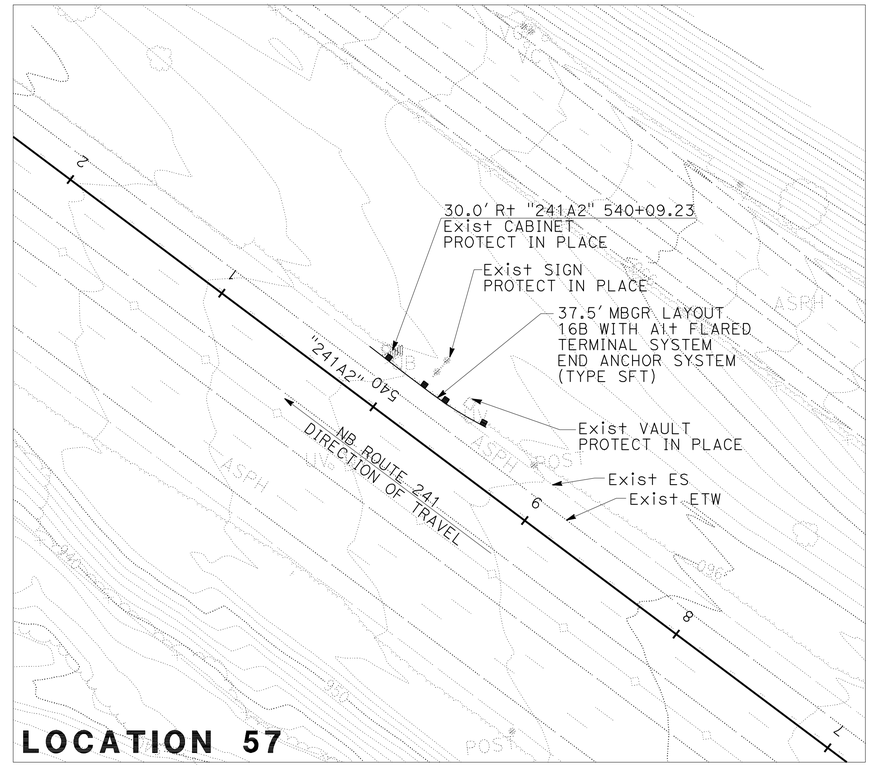

LOCATION 57

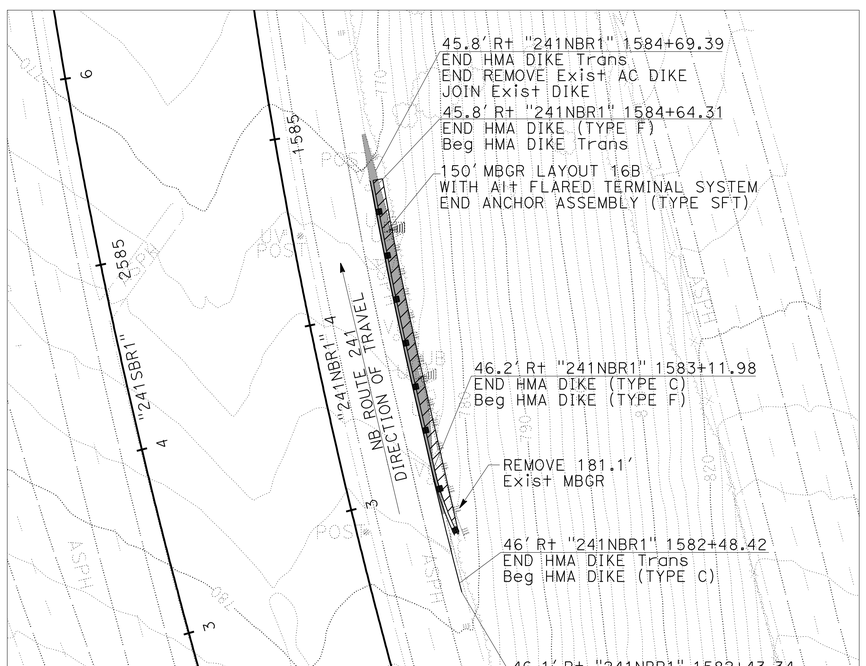

LOCATION 58

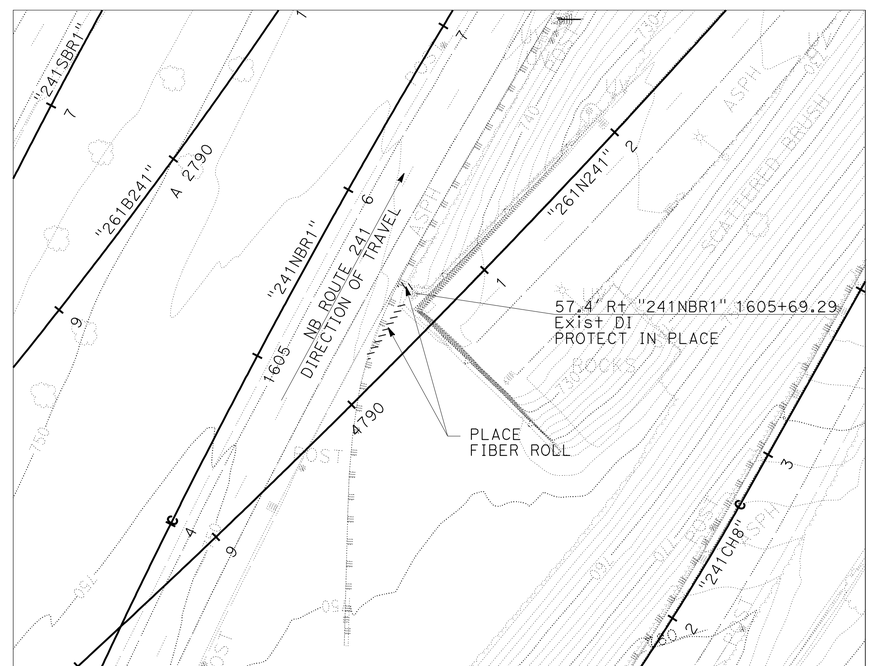

LOCATION 59

LEGEND:

REMOVE Exist AC PAVEMENT (FOR STATION LIMITS SEE SHEET Q-19)

PLACE 2" Misc HMA PER DETAIL ON SHEET C-31

NOTES:

1. FOR LOCATION WITHIN THE PROJECT LIMITS SEE KEY MAP K-1 TO K-3
2. INSTALL GUARD RAILING DELINEATORS AT THE BEGINNING, THE END AND AT 25 Ft INCREMENTS OF EACH MBGR SECTION PER CALTRANS Std PLAN A77C4 AND A73C. TYPE AND QUANTITY ARE LOCATED ON QUANTITY SHEETS Q-20 TO Q-24.

CONSTRUCTION DETAILS
(MBGR UPGRADE DETAIL)
SCALE: 1" = 40'

C-27

REVISED BY	RK/WT		
DATE REVISED	07/22/10		
CALCULATED-DESIGNED BY	LINDSAY KAUFMANN		
CHECKED BY	LINDSAY KAUFMANN		
CONSULTANT FUNCTIONAL SUPERVISOR	MIKE CHESNEY		

STATE OF CALIFORNIA - DEPARTMENT OF TRANSPORTATION

Caltrans

H:\pdata\10106739\CADD\TransPW\Div\Merge\8-24-10\c0G370ga027.dgn trmnguye 19-OCT-2010 13:44

LAST REVISION 06-08-10 | DATE PLOTTED => 19-OCT-2010 | TIME PLOTTED => 13:44

Dist	COUNTY	ROUTE	POST MILES TOTAL PROJECT	SHEET No.	TOTAL SHEETS
12	Ora	241	15.5/39.0	32	117

Lindsay M. Kaufmann 09/01/10
REGISTERED CIVIL ENGINEER DATE

10-18-10
PLANS APPROVAL DATE

REGISTERED PROFESSIONAL ENGINEER LINDSAY M. KAUFMANN No. C71806 Exp. 12/31/11 CIVIL STATE OF CALIFORNIA

THE STATE OF CALIFORNIA OR ITS OFFICERS OR AGENTS SHALL NOT BE RESPONSIBLE FOR THE ACCURACY OR COMPLETENESS OF SCANNED COPIES OF THIS PLAN SHEET.

RBF CONSULTING
14725 ALTON PKWY
IRVINE, CA. 92618-2027

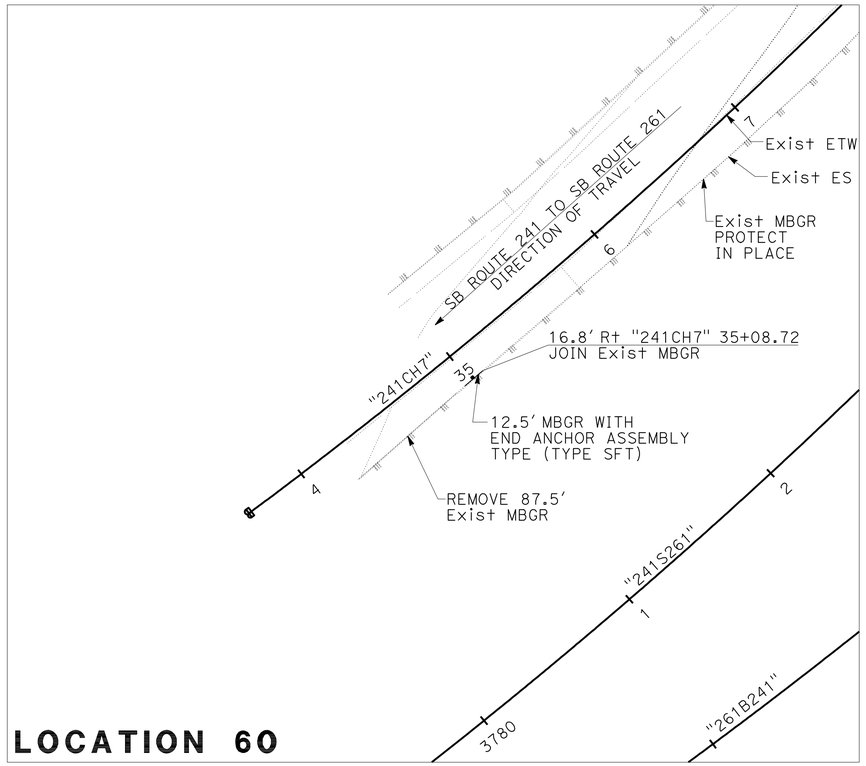

LOCATION 60

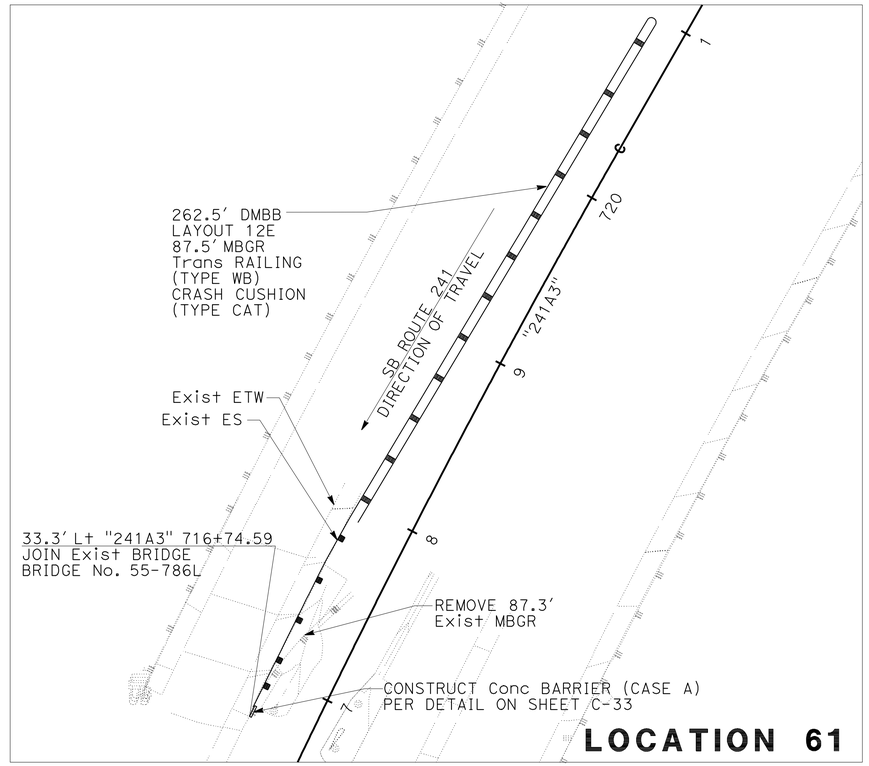

LOCATION 61

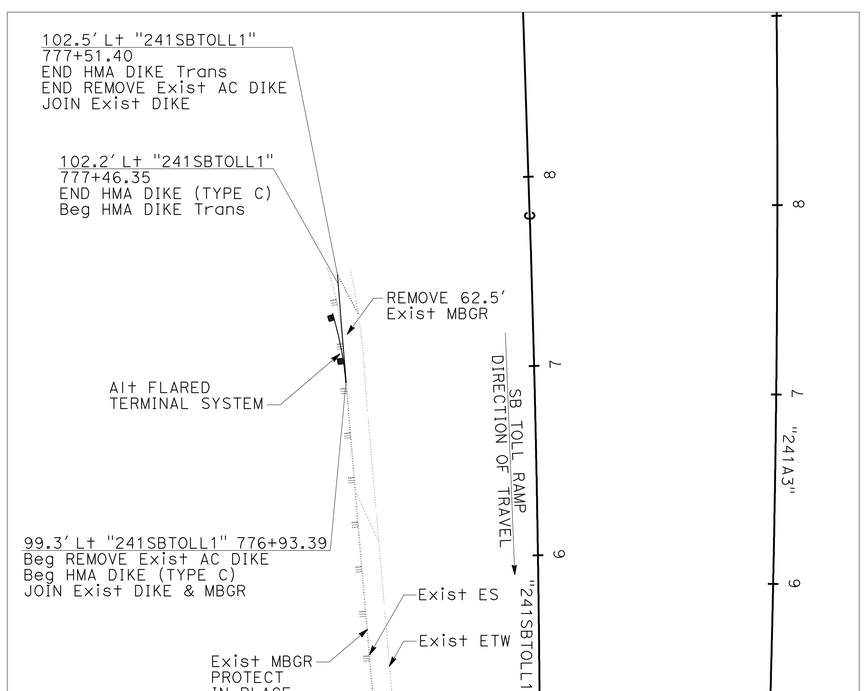

LOCATION 62

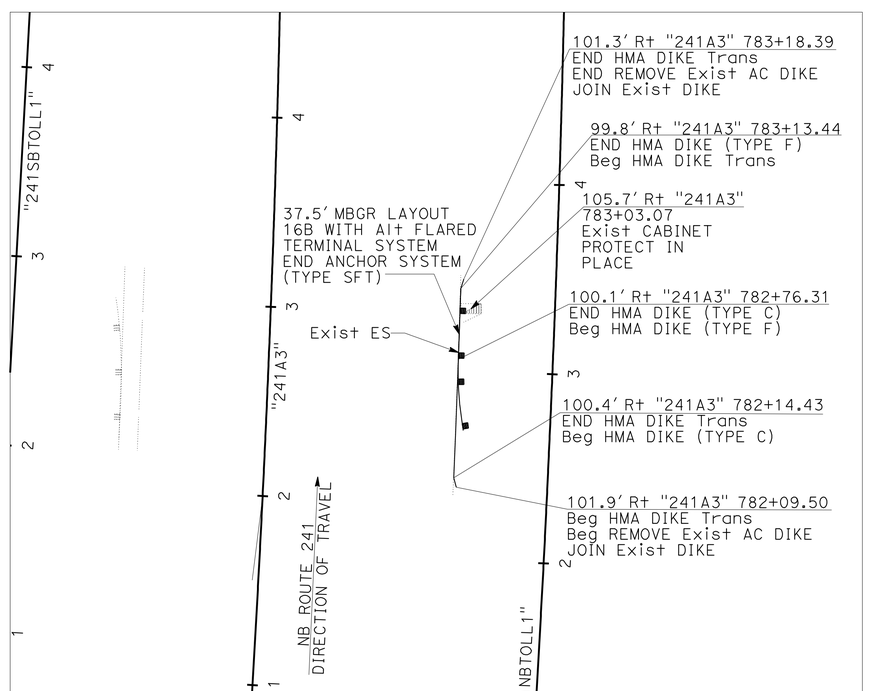

LOCATION 63

NOTES:

1. FOR LOCATION WITHIN THE PROJECT LIMITS SEE KEY MAP K-1 TO K-3
2. INSTALL GUARD RAILING DELINEATORS AT THE BEGINNING, THE END AND AT 25 Ft INCREMENTS OF EACH MBGR SECTION PER CALTRANS Std PLAN A77C4 AND A73C. TYPE AND QUANTITY ARE LOCATED ON QUANTITY SHEETS Q-20 TO Q-24.

CONSTRUCTION DETAILS
(MBGR UPGRADE DETAIL)
SCALE: 1" = 40'

C-28

REVISED BY	RK/WT		
DATE REVISED	07/22/10		
CALCULATED-DESIGNED BY	LINDSAY KAUFMANN		
CHECKED BY	LINDSAY KAUFMANN		
CONSULTANT FUNCTIONAL SUPERVISOR	MIKE CHESNEY		

STATE OF CALIFORNIA - DEPARTMENT OF TRANSPORTATION
Caltrans

H:\pdata\10106739\CADD\TransPW\Div\Merge\8-24-10\c0G370ga028.dgn trmnguye 19-OCT-2010 13:44

LAST REVISION 06-08-10 | DATE PLOTTED => 19-OCT-2010 | TIME PLOTTED => 13:44

Dist	COUNTY	ROUTE	POST MILES TOTAL PROJECT	SHEET No.	TOTAL SHEETS
12	Ora	241	15.5/39.0	33	117

Lindsay M. Kaufmann 09/01/10
REGISTERED CIVIL ENGINEER DATE

10-18-10
PLANS APPROVAL DATE

REGISTERED PROFESSIONAL ENGINEER LINDSAY M. KAUFMANN No. C71806 Exp. 12/31/11 CIVIL STATE OF CALIFORNIA

THE STATE OF CALIFORNIA OR ITS OFFICERS OR AGENTS SHALL NOT BE RESPONSIBLE FOR THE ACCURACY OR COMPLETENESS OF SCANNED COPIES OF THIS PLAN SHEET.

RBF CONSULTING
14725 ALTON PKWY
IRVINE, CA. 92618-2027

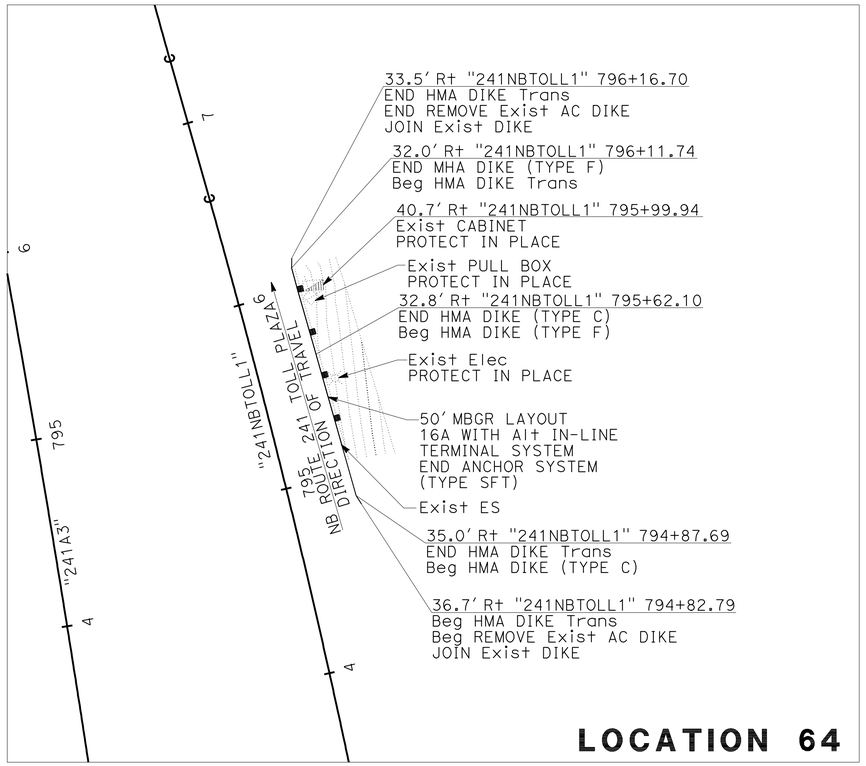

LOCATION 64

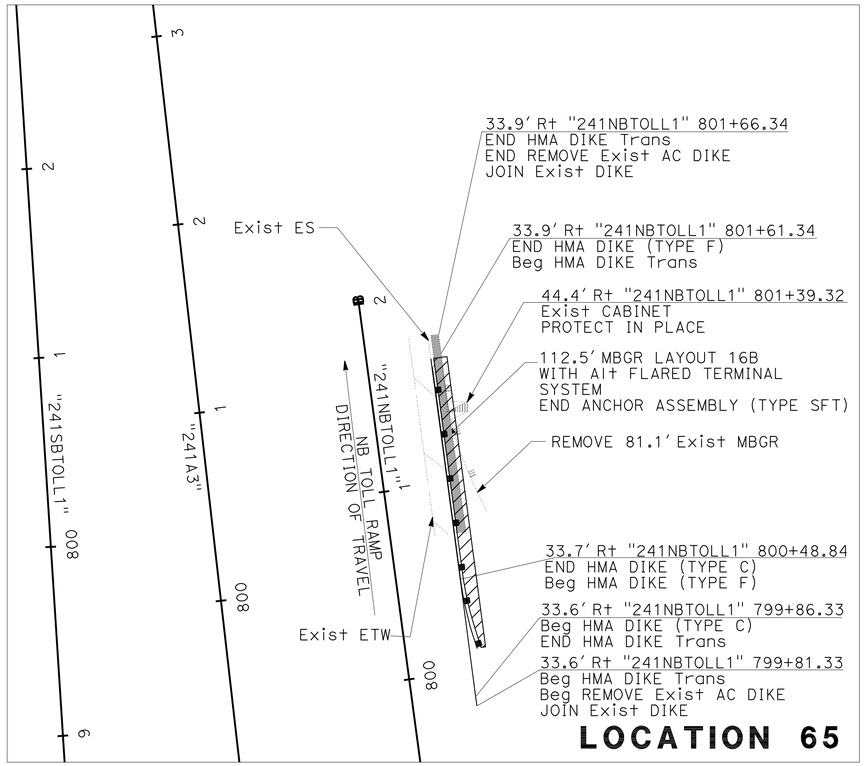

LOCATION 65

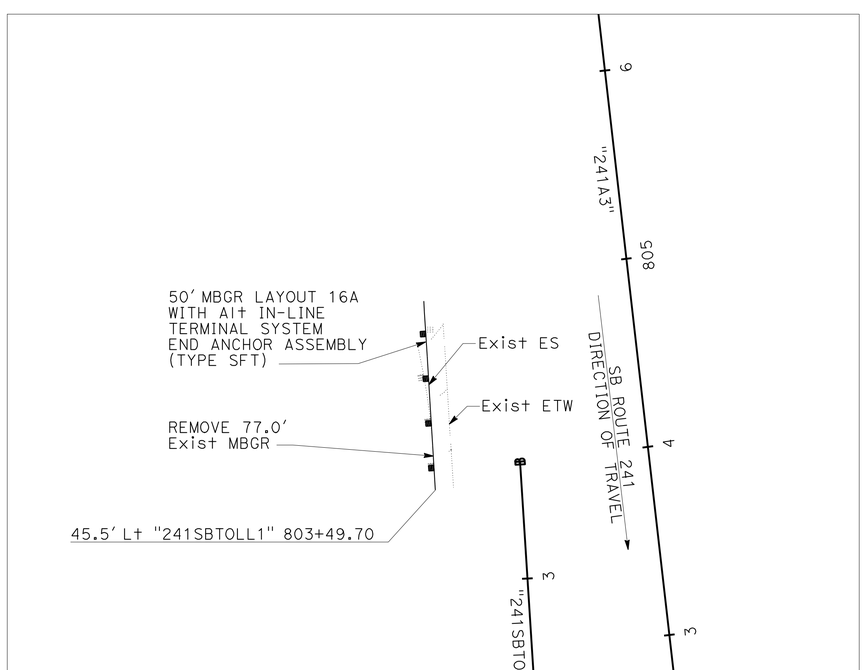

LOCATION 66

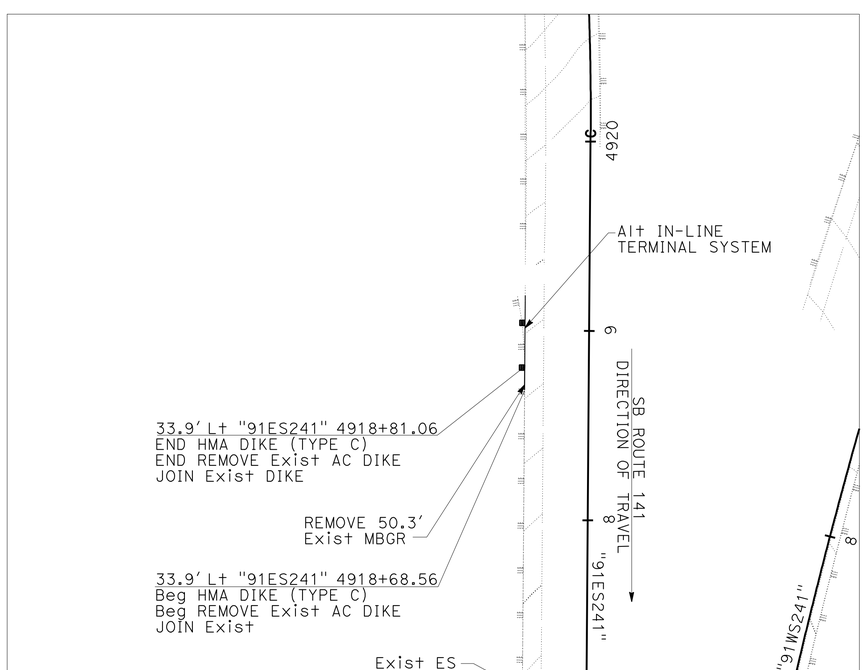

LOCATION 67

LEGEND:

REMOVE Exist AC PAVEMENT (FOR STATION LIMITS SEE SHEET Q-19)

PLACE 2" Misc HMA PER DETAIL ON SHEET C-31

NOTES:

1. FOR LOCATION WITHIN THE PROJECT LIMITS SEE KEY MAP K-1 TO K-3
2. INSTALL GUARD RAILING DELINEATORS AT THE BEGINNING, THE END AND AT 25 Ft INCREMENTS OF EACH MBGR SECTION PER CALTRANS Std PLAN A77C4 AND A73C. TYPE AND QUANTITY ARE LOCATED ON QUANTITY SHEETS Q-20 TO Q-24.

CONSTRUCTION DETAILS
(MBGR UPGRADE DETAIL)
SCALE: 1" = 40'

C-29

REVISED BY	DATE REVISED
RK/WT	07/22/10

CALCULATED-DESIGNED BY	CHECKED BY	CONSULTANT FUNCTIONAL SUPERVISOR
LINDSAY KAUFMANN	LINDSAY KAUFMANN	MIKE CHESNEY

STATE OF CALIFORNIA - DEPARTMENT OF TRANSPORTATION
Caltrans

H:\pdata\10106739\CADD\TransPW\Div\Merge\8-24-10\c0G370ga029.dgn trmnguye 19-OCT-2010 13:45

LAST REVISION 06-08-10 | DATE PLOTTED => 19-OCT-2010 | TIME PLOTTED => 13:45

Dist	COUNTY	ROUTE	POST MILES TOTAL PROJECT	SHEET No.	TOTAL SHEETS
12	Ora	241	15.5/39.0	34	117

Lindsay M. Kaufmann 09/01/10
REGISTERED CIVIL ENGINEER DATE

10-18-10
PLANS APPROVAL DATE

REGISTERED PROFESSIONAL ENGINEER LINDSAY M. KAUFMANN No. C71806 Exp. 12/31/11 CIVIL STATE OF CALIFORNIA

THE STATE OF CALIFORNIA OR ITS OFFICERS OR AGENTS SHALL NOT BE RESPONSIBLE FOR THE ACCURACY OR COMPLETENESS OF SCANNED COPIES OF THIS PLAN SHEET.

RBF CONSULTING
14725 ALTON PKWY
IRVINE, CA. 92618-2027

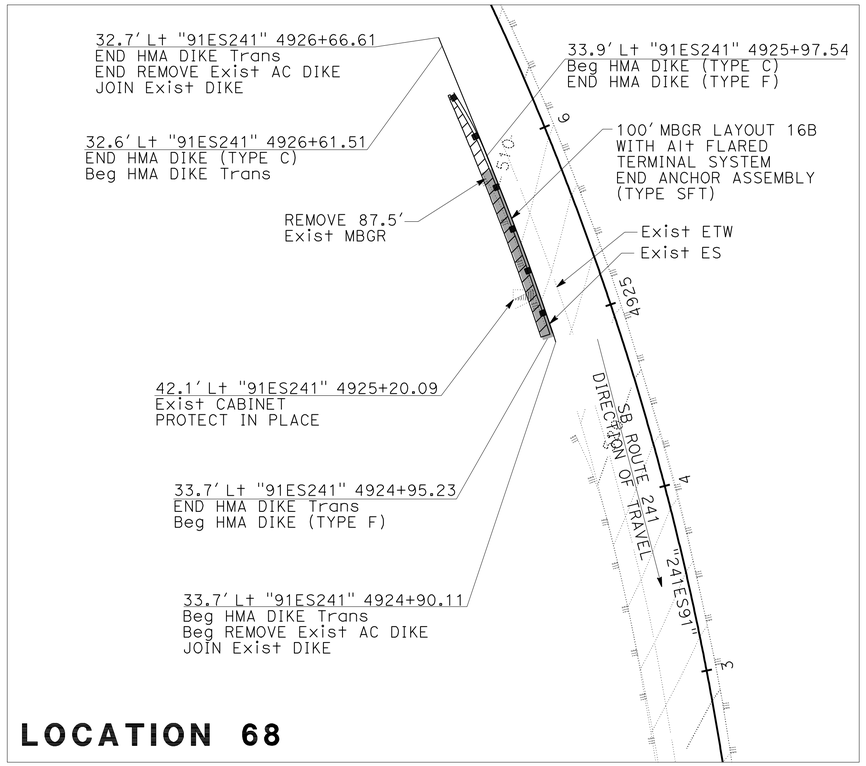

LOCATION 68

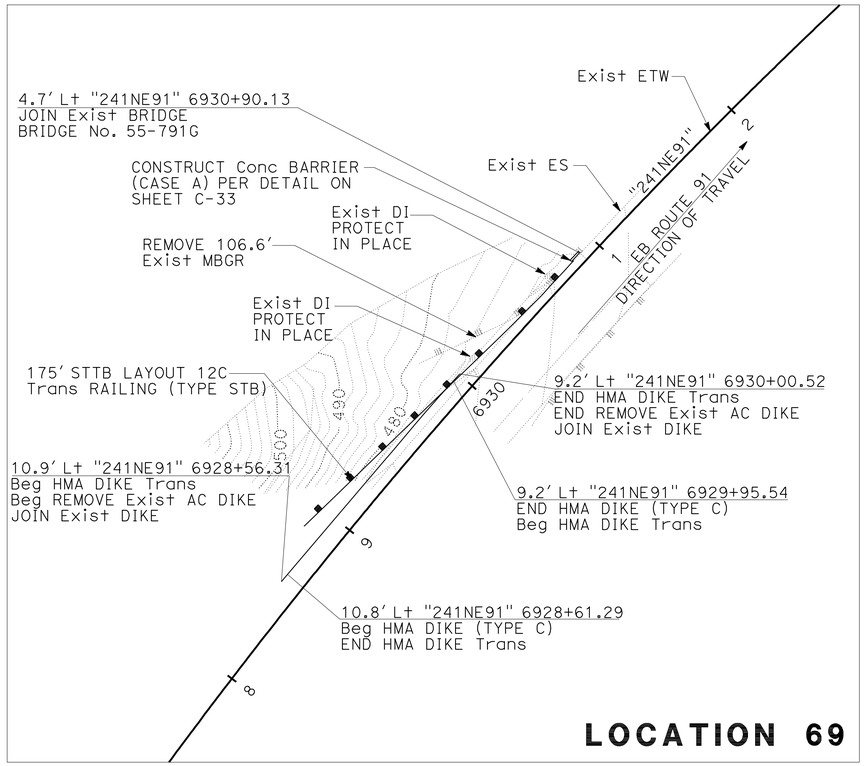

LOCATION 69

LEGEND:

- REMOVE Exist AC PAVEMENT (FOR STATION LIMITS SEE SHEET Q-19)
- PLACE 2" Misc HMA PER DETAIL ON SHEET C-31

NOTES:

1. FOR LOCATION WITHIN THE PROJECT LIMITS SEE KEY MAP K-1 TO K-3
2. INSTALL GUARD RAILING DELINEATORS AT THE BEGINNING, THE END AND AT 25 Ft INCREMENTS OF EACH MBGR SECTION PER CALTRANS Std PLAN A77C4 AND A73C. TYPE AND QUANTITY ARE LOCATED ON QUANTITY SHEETS Q-20 TO Q-24.

CONSTRUCTION DETAILS
(MBGR UPGRADE DETAIL)
SCALE: 1" = 40'

C-30

REVISED BY	DATE REVISED
RK/WT	07/22/10

CALCULATED-DESIGNED BY: LINDSAY KAUFMANN
CHECKED BY: LINDSAY KAUFMANN
CONSULTANT FUNCTIONAL SUPERVISOR: MIKE CHESNEY

STATE OF CALIFORNIA - DEPARTMENT OF TRANSPORTATION
Caltrans

H:\pdata\10106739\CADD\TransPW\Div\Merge\8-24-10\c0G370ga030.dgn
trmnguye 19-OCT-2010 13:45

LAST REVISION 06-08-10 | DATE PLOTTED => 19-OCT-2010 | TIME PLOTTED => 13:45

Dist	COUNTY	ROUTE	POST MILES TOTAL PROJECT	SHEET No.	TOTAL SHEETS
12	Ora	241	15.5/39.0	35	117

REGISTERED CIVIL ENGINEER 09/01/10 DATE

10-18-10
PLANS APPROVAL DATE

REGISTERED PROFESSIONAL ENGINEER LINDSAY M. KAUFMANN No. C71806 Exp. 12/31/11 CIVIL STATE OF CALIFORNIA

THE STATE OF CALIFORNIA OR ITS OFFICERS OR AGENTS SHALL NOT BE RESPONSIBLE FOR THE ACCURACY OR COMPLETENESS OF SCANNED COPIES OF THIS PLAN SHEET.

RBF CONSULTING
14725 ALTON PKWY
IRVINE, CA. 92618-2027

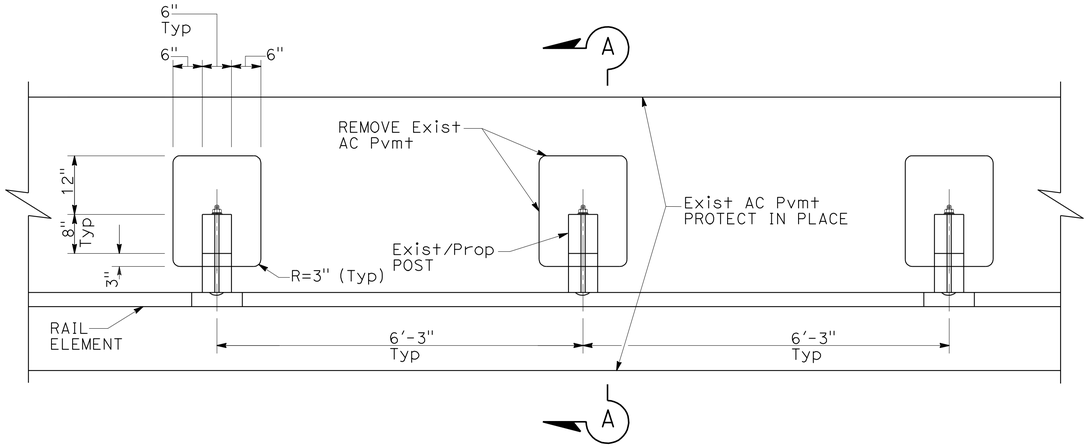

PLAN

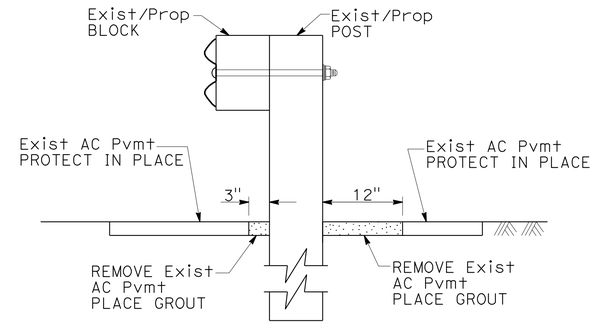

SECTION A-A

Exist AC PAVEMENT REMOVAL

(FOR STATION LIMITS SEE SHEET Q-19)

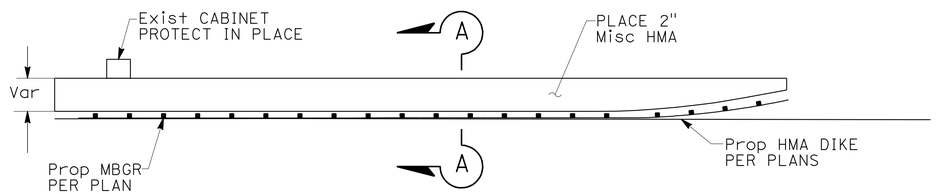

PLAN

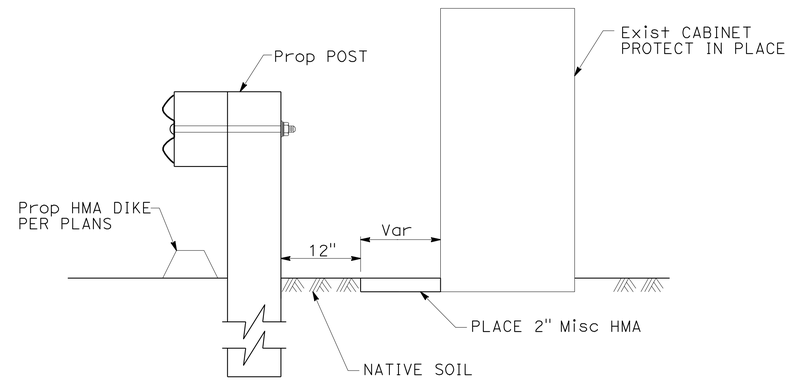

SECTION A-A

PLACE Misc HMA

(FOR STATION LIMITS SEE SHEET Q-17)

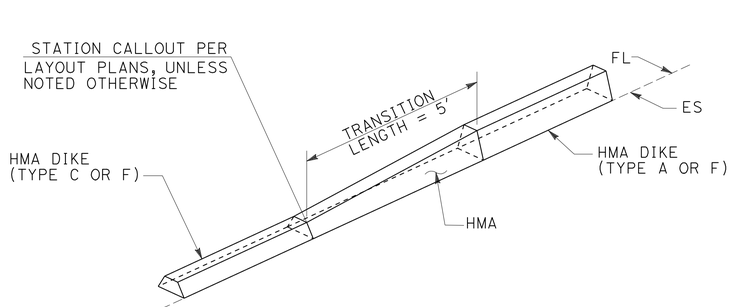

HMA DIKE (TYPE A OR F) TO HMA DIKE (TYPE C OR F)

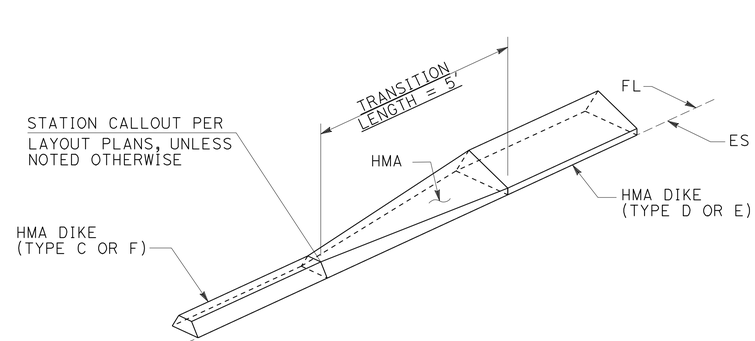

HMA DIKE (TYPE C OR F) TO HMA DIKE (TYPE D OR E)

HMA DIKE TRANSITION

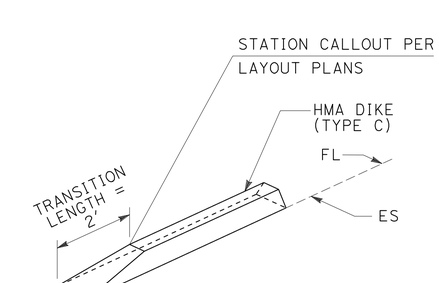

END DETAIL OF HMA DIKE (TYPE C OR F)

CONSTRUCTION DETAILS

NO SCALE

C-31

REVISED BY	DATE REVISED
RK/WT	07/22/10

CALCULATED-DESIGNED BY	CHECKED BY
LINDSAY KAUFMANN	LINDSAY KAUFMANN

CONSULTANT FUNCTIONAL SUPERVISOR: MIKE CHESNEY

STATE OF CALIFORNIA - DEPARTMENT OF TRANSPORTATION

Caltrans

H:\pdata\10106739\CADD\TransPW\Div\Merge\8-24-10\c0G370ga031.dgn 19-OCT-2010 13:45 trmnguye

LAST REVISION 06-08-10 | DATE PLOTTED => 19-OCT-2010 | TIME PLOTTED => 13:45

Dist	COUNTY	ROUTE	POST MILES TOTAL PROJECT	SHEET No.	TOTAL SHEETS
12	Ora	241	15.5/39.0	36	117

Lindsay M. Kaufmann 09/01/10
REGISTERED CIVIL ENGINEER DATE

10-18-10
PLANS APPROVAL DATE

REGISTERED PROFESSIONAL ENGINEER LINDSAY M. KAUFMANN No. C71806 Exp. 12/31/11 CIVIL STATE OF CALIFORNIA

THE STATE OF CALIFORNIA OR ITS OFFICERS OR AGENTS SHALL NOT BE RESPONSIBLE FOR THE ACCURACY OR COMPLETENESS OF SCANNED COPIES OF THIS PLAN SHEET.

RBF CONSULTING
14725 ALTON PKWY
IRVINE, CA. 92618-2027

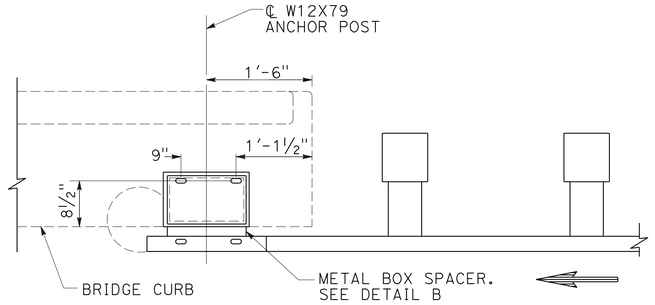

PLAN

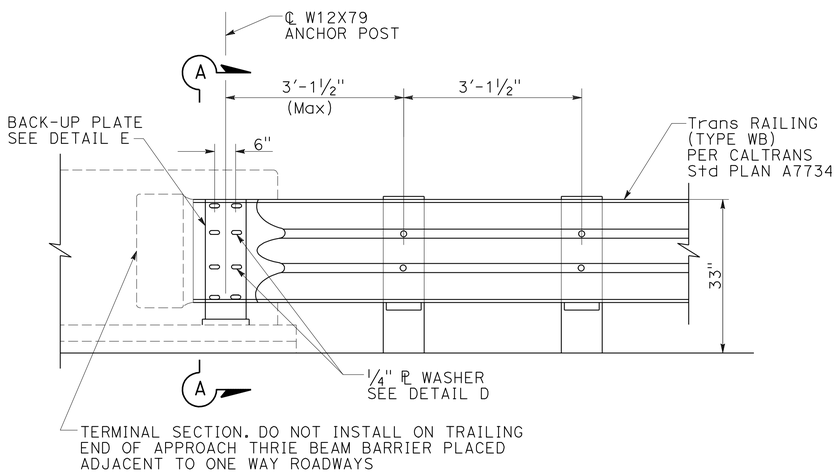

ELEVATION

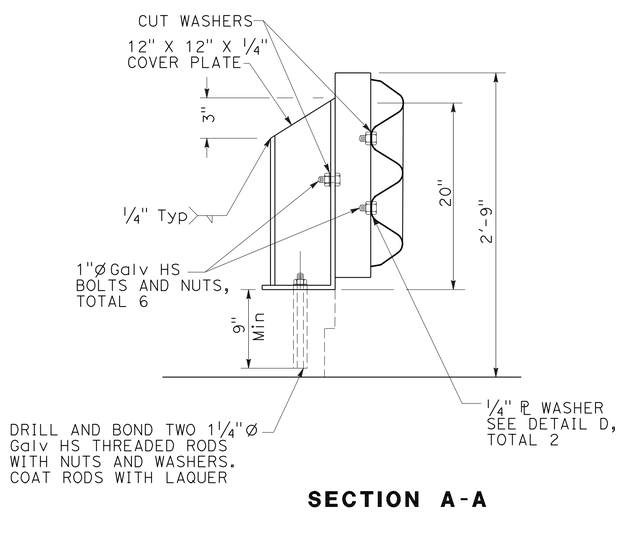

SECTION A-A

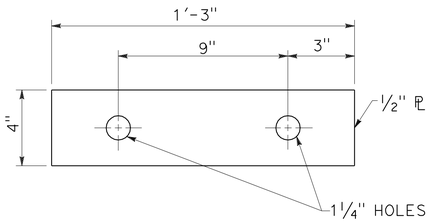

DETAIL C
½" PLATE WASHER

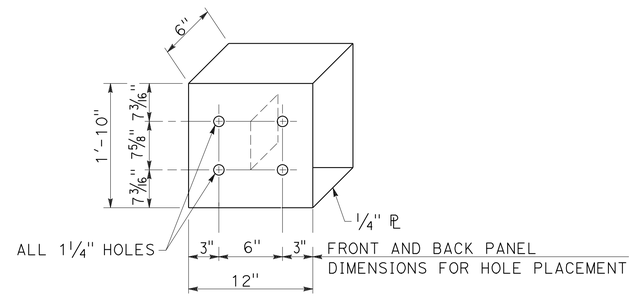

DETAIL B
STRAIGHT METAL BOX SPACER

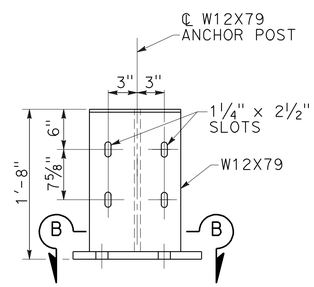

DETAIL A
ANCHOR POST ASSEMBLY

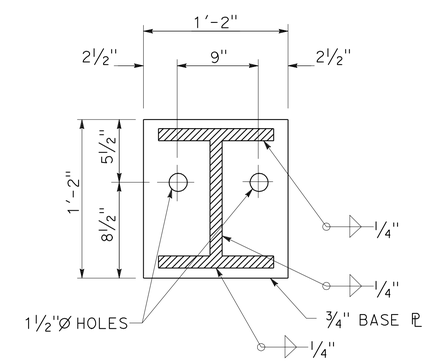

SECTION B-B

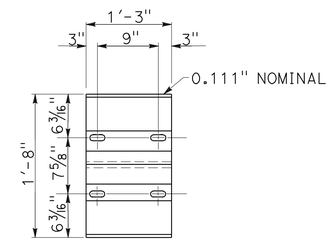

DETAIL E
BACK-UP PLATE

(SAME SHAPE AS THRIE BEAM RAIL ELEMENT. REQUIRED WHEN THRIE BEAM RAIL IS ATTACHED TO BRIDGE RAILING WITH METAL BOX SPACER AND TERMINAL SECTION NOT USED)

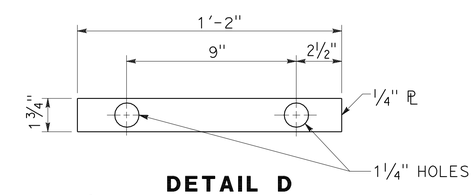

DETAIL D
¼" PLATE WASHER

CONSTRUCTION DETAILS
TRANSITION RAILING (TYPE WB) CONNECTION TO BRIDGE CURB
NO SCALE

C-32

REVISED BY	DATE REVISED
RK/WT	07/22/10

LINDSAY KAUFMANN — CALCULATED-DESIGNED BY
LINDSAY KAUFMANN — CHECKED BY
MIKE CHESNEY — CONSULTANT FUNCTIONAL SUPERVISOR

STATE OF CALIFORNIA - DEPARTMENT OF TRANSPORTATION
Caltrans

LAST REVISION 06-08-10 | DATE PLOTTED => 19-OCT-2010 | TIME PLOTTED => 13:45

H:\pdata\10106739\CADD\TransPW\Div\Merge\8-24-10\c0G370ga032.dgn trmnguye 19-OCT-2010 13:45

Dist	COUNTY	ROUTE	POST MILES TOTAL PROJECT	SHEET No.	TOTAL SHEETS
12	Ora	241	15.5/39.0	37	117

Lindsay M. Kaufmann 09/01/10
REGISTERED CIVIL ENGINEER DATE

10-18-10
PLANS APPROVAL DATE

REGISTERED PROFESSIONAL ENGINEER LINDSAY M. KAUFMANN No. C71806 Exp. 12/31/11 CIVIL STATE OF CALIFORNIA

THE STATE OF CALIFORNIA OR ITS OFFICERS OR AGENTS SHALL NOT BE RESPONSIBLE FOR THE ACCURACY OR COMPLETENESS OF SCANNED COPIES OF THIS PLAN SHEET.

RBF CONSULTING
14725 ALTON PKWY
IRVINE, CA. 92618-2027

QUANTITY TABLE

CASE	CLASS II CONCRETE (STRUCTURE)	BAR REINFORCING STEEL	DRILL AND BOND DOWEL
	CY	LB	LF
A	2	332	11
B	3	569	11

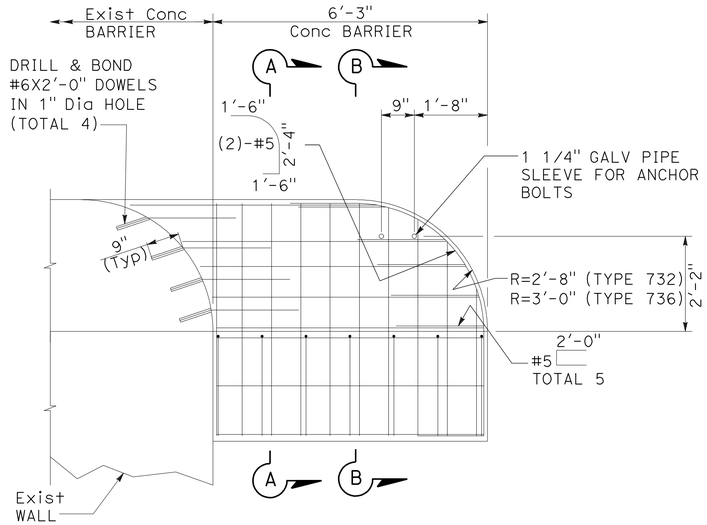

ELEVATION

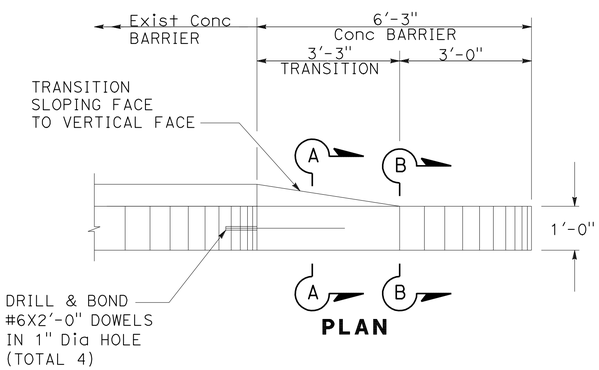

PLAN

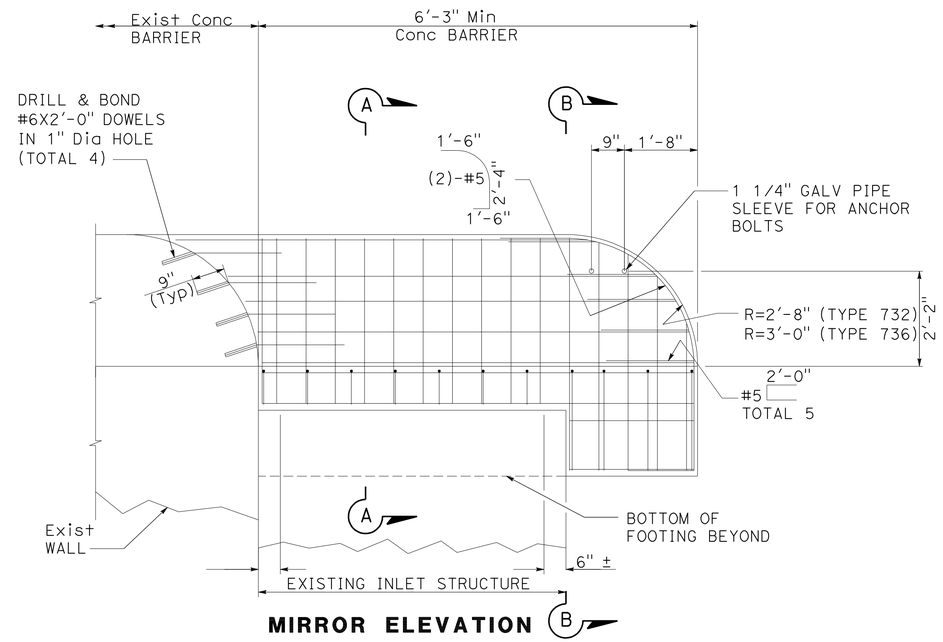

MIRROR ELEVATION

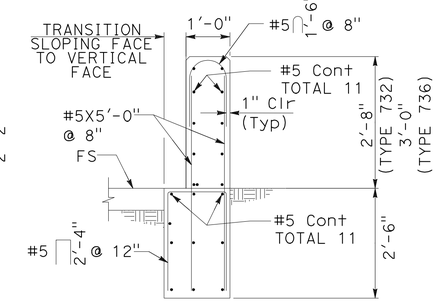

SECTION B-B

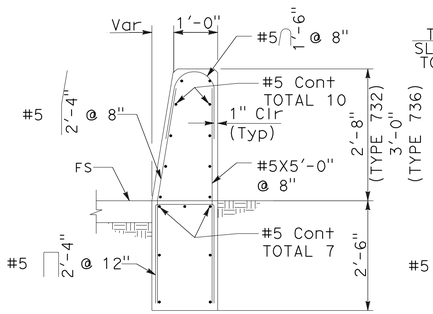

SECTION A-A

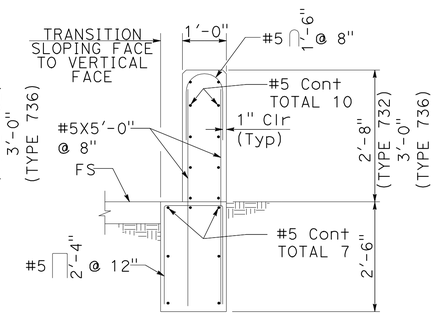

SECTION B-B

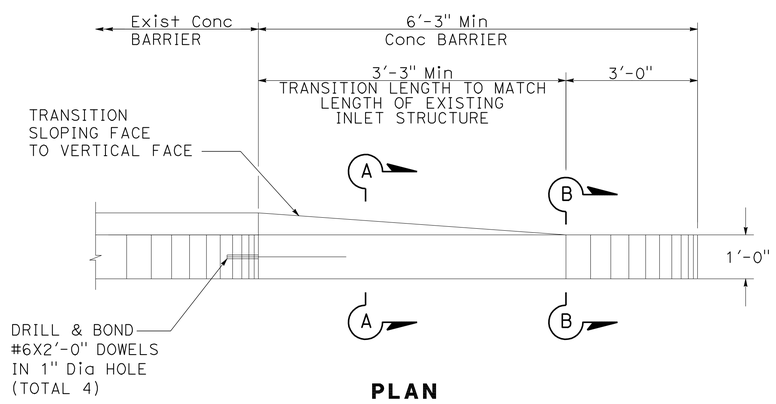

PLAN

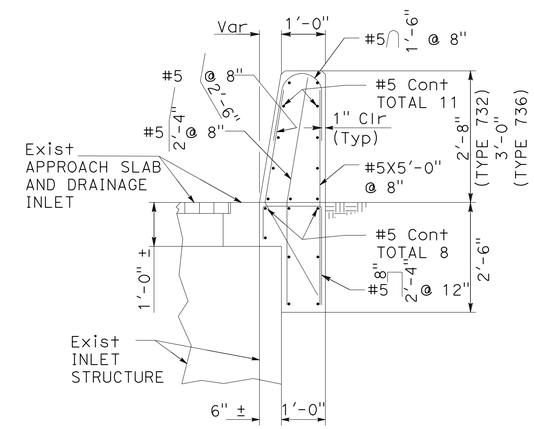

SECTION A-A

CASE A
CONCRETE BARRIER AT EXISTING CURVED-END CONCRETE BARRIER

CASE B
CONCRETE BARRIER AT EXISTING CURVED-END CONCRETE BARRIER WITH INLET STRUCTURE

CONSTRUCTION DETAILS
(CONCRETE BARRIER)
NO SCALE

C-33

STATE OF CALIFORNIA - DEPARTMENT OF TRANSPORTATION
Caltrans
CONSULTANT FUNCTIONAL SUPERVISOR: MIKE CHESNEY
CALCULATED-DESIGNED BY: LINDSAY KAUFMANN
CHECKED BY: LINDSAY KAUFMANN
REVISED BY: RK/WT
DATE REVISED: 07/22/10
LAST REVISION 06-08-10
DATE PLOTTED => 19-OCT-2010
TIME PLOTTED => 13:45
H:\pdata\10106739\CADD\TransPW\Div\Merge\8-24-10\c0G370ga033.dgn
19-OCT-2010 13:45
trmnguye

Dist	COUNTY	ROUTE	POST MILES TOTAL PROJECT	SHEET No.	TOTAL SHEETS
12	Ora	241	15.5/39.0	38	117

Lindsay M. Kaufmann 09/01/10
REGISTERED CIVIL ENGINEER DATE

10-18-10
PLANS APPROVAL DATE

REGISTERED PROFESSIONAL ENGINEER LINDSAY M. KAUFMANN No. C71806 Exp. 12/31/11 CIVIL STATE OF CALIFORNIA

THE STATE OF CALIFORNIA OR ITS OFFICERS OR AGENTS SHALL NOT BE RESPONSIBLE FOR THE ACCURACY OR COMPLETENESS OF SCANNED COPIES OF THIS PLAN SHEET.

RBF CONSULTING
14725 ALTON PKWY
IRVINE, CA. 92618-2027

QUANTITY TABLE

CASE	CLASS II CONCRETE (STRUCTURE)	BAR REINFORCING STEEL	DRILL AND BOND DOWEL
	CY	LB	LF
C	2	318	11
D	2	328	11

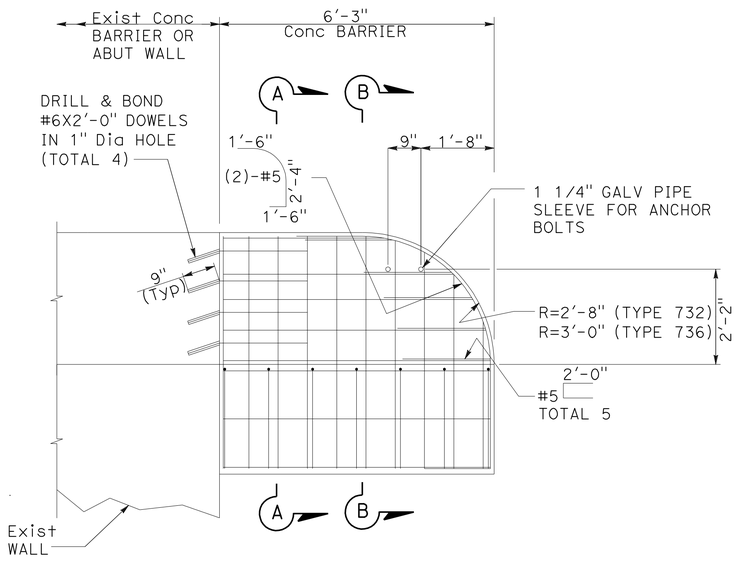

ELEVATION

PLAN

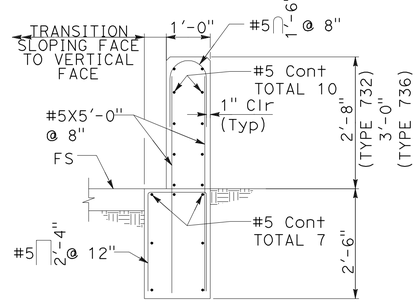

SECTION B-B

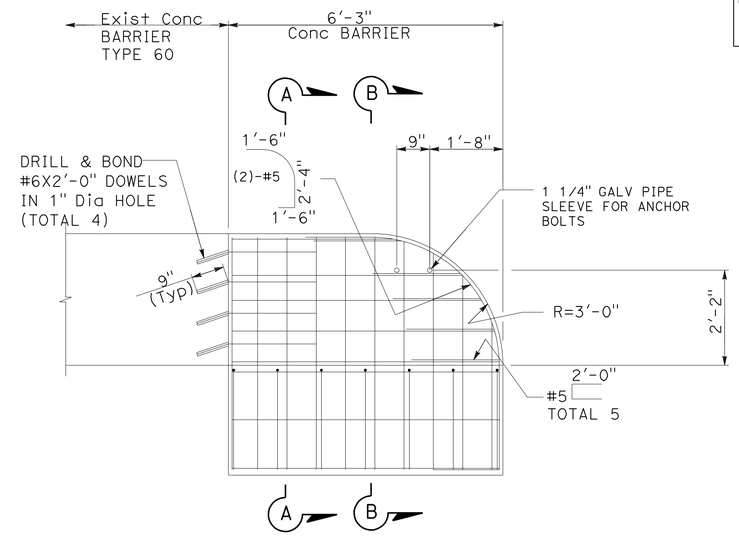

ELEVATION

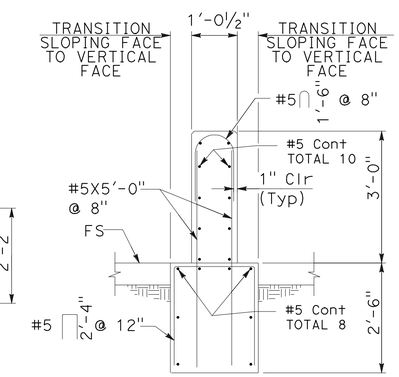

SECTION B-B

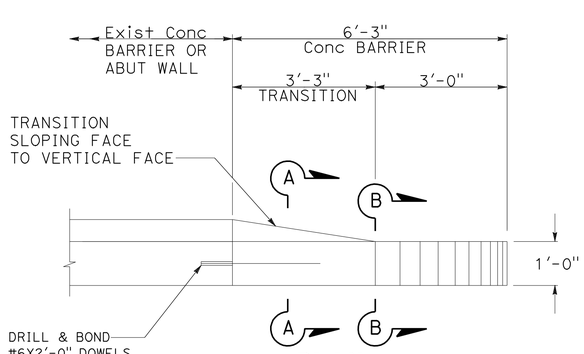

PLAN

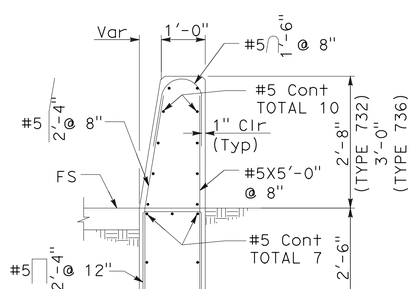

SECTION A-A

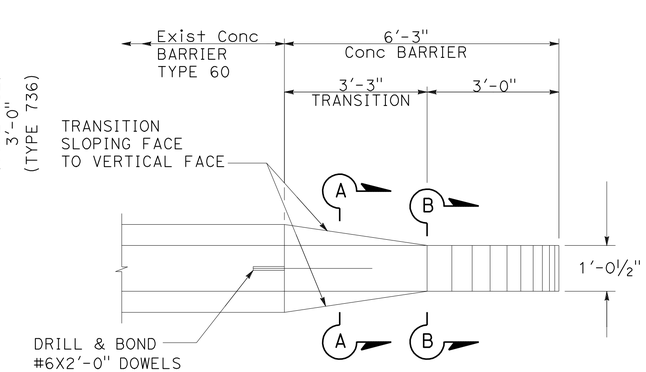

PLAN

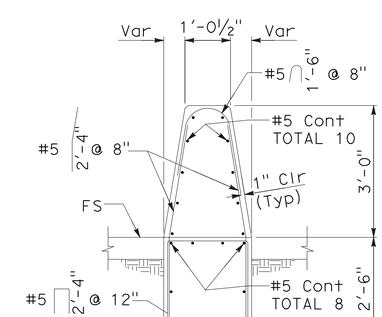

SECTION A-A

CASE C
CONCRETE BARRIER AT EXISTING ABUTMENT WALL OR VERTICAL END CONCRETE BARRIER

CASE D
CONCRETE BARRIER AT EXISTING CONCRETE BARRIER (TYPE 60)

CONSTRUCTION DETAILS
(CONCRETE BARRIER)
NO SCALE

C-34

REVISED BY	DATE REVISED
RK/WT	07/22/10

CALCULATED-DESIGNED BY: LINDSAY KAUFMANN
CHECKED BY: LINDSAY KAUFMANN
CONSULTANT FUNCTIONAL SUPERVISOR: MIKE CHESNEY
STATE OF CALIFORNIA - DEPARTMENT OF TRANSPORTATION
Caltrans

H:\pdata\10106739\CADD\TransPW\Div\Merge\8-24-10\c0G370ga034.dgn trmnguye 19-OCT-2010 13:45

LAST REVISION 06-08-10 | DATE PLOTTED => 19-OCT-2010 | TIME PLOTTED => 13:45

Dist	COUNTY	ROUTE	POST MILES TOTAL PROJECT	SHEET No.	TOTAL SHEETS
12	Ora	241	15.5/39.0	39	117

Lindsay M. Kaufmann 09/01/10
REGISTERED CIVIL ENGINEER DATE

10-18-10
PLANS APPROVAL DATE

REGISTERED PROFESSIONAL ENGINEER LINDSAY M. KAUFMANN No. C71806 Exp.12/31/11 CIVIL STATE OF CALIFORNIA

THE STATE OF CALIFORNIA OR ITS OFFICERS OR AGENTS SHALL NOT BE RESPONSIBLE FOR THE ACCURACY OR COMPLETENESS OF SCANNED COPIES OF THIS PLAN SHEET.

RBF CONSULTING
14725 ALTON PKWY
IRVINE, CA. 92618-2027

CONSTRUCTION NOTES:

1. BMP SC-10, CONSTRUCT TEMPORARY DRAINAGE INLET PROTECTION PER Std PLAN NSP T61 THROUGH T64.
2. DELETED
3. BMP SC-1, INSTALL TEMPORARY SILT FENCE. DETAILS PER Std PLAN T51.
4. BMP SC-3, TEMPORARY HYDRAULIC MULCH (BONDED FIBER MATRIX) ON EXPOSED SLOPES DURING CONSTRUCTION.
5. BMP SC-5, INSTALL TEMPORARY FIBER ROLLS. DETAILS PER Std PLAN T56.

PROJECT NOTES:

1. THE INFORMATION ON THIS PLAN IS INTENDED TO BE USED AS A GUIDELINE FOR THE CONTRACTOR AND SUBCONTRACTORS TO INSTALL WATER POLLUTION CONTROL THROUGHOUT THE SITE. THESE DRAWINGS ARE TO BE USED IN CONJUNCTION WITH THE NARRATIVE SECTION OF THE STORM WATER POLLUTION PREVENTION PLAN (SWPPP).
2. FIELD CONDITIONS MAY NECESSITATE MODIFICATIONS TO THESE DRAWINGS.
3. TEMPORARY SOIL STABILIZATION MEASURES WILL BE IMPLEMENTED TEN (10) DAYS PRIOR TO THE START OF THE DEFINED RAINY SEASON AND AT REGULAR INTERVALS THROUGHOUT THE CONTRACT'S DISTURBED SOIL AREA (DSA) PROTECTION REQUIREMENTS (SEE CONTRACT SPECIFICATION).
4. PERMANENT EROSION CONTROL WILL BE INSTALLED AS AREAS ARE DETERMINED TO BE SUBSTANTIALLY COMPLETE.
5. CONTRACTOR SHALL PROVIDE INLET PROTECTION FOR A MINIMUM OF THREE SEQUENTIAL INLETS DOWNSTREAM / DOWN-SLOPE OF THE IMPROVEMENTS.
6. WATER POLLUTION CONTROL DETAILS HEREIN ARE TYPICAL CASES. LOCATION SPECIFIC DETAILS WILL BE PROVIDED BY THE CONTRACTOR FOR APPROVAL BY THE ENGINEER.
7. THE FLOW DIRECTION ARROWS AND THE WATER POLLUTION CONTROL ELEMENTS ARE DRAWN FOR ONE CASE. LOCATIONS WHERE THE FLOW IS CONTRARY TO THE DRAWING OR LAYOUT OF THE IMPROVEMENT, THE SITE SLOPES AND DIRECTION OF FLOW WILL DETERMINE THE ORIENTATION OF THE WATER POLLUTION CONTROL MEASURES.
8. PERIMETER CONTROL MEASURES SHALL BE DETERMINED BY THE RUN-ON OR RUN-OFF POTENTIAL. IN AREAS OF ROADWAY CUT, USE TEMPORARY SILT FENCE (BMP SC-1) AT THE TOE OF THE EXISTING CUT SLOPE. ALONG THE EMBANKMENT OR ROADWAY FILL SECTIONS, USE TEMPORARY FIBER ROLL (BMP SC-5) AT THE HINGE OF THE EXISTING FILL SLOPE. PLACEMENT OF THE PERIMETER CONTROL MAY VARY TO SUIT THE CONDITIONS AND MINIMIZE THE DISTURBED SOIL AREA. SETBACK DISTANCES FROM TOE OR HINGE ARE PERMISSIBLE FOR THIS PURPOSE.

LEGEND

—xx——TSF— BMP SC-1 Temp SILT FENCE

BMP SC-3 Temp HYDRAULIC MULCH (BONDED FIBER MATRIX)

FR BMP SC-5 Temp FIBER ROLLS (PERIMETER CONTROL)

BMP SC-5 - Temp FIBER ROLLS (SLOPE STABILIZATION)
PLACE ALONG THE CONTOUR AND SPACE 20' C-C PER Std PLAN NSP T56

TEMPORARY WATER POLLUTION CONTROL PLAN

NO SCALE

WPC-1

REVISED BY	DATE REVISED
RK/WT	07/22/10

LINDSAY KAUFMANN — LINDSAY KAUFMANN

CALCULATED-DESIGNED BY — CHECKED BY

CONSULTANT FUNCTIONAL SUPERVISOR: MIKE CHESNEY

STATE OF CALIFORNIA - DEPARTMENT OF TRANSPORTATION

Caltrans

H:\pdata\10106739\CADD\TransPW\Div\Merge\8-24-10\c0G370gb001.dgn trlenard 19-OCT-2010 14:12

LAST REVISION 06-08-10 | DATE PLOTTED => 19-OCT-2010 | TIME PLOTTED => 14:12

Dist	COUNTY	ROUTE	POST MILES TOTAL PROJECT	SHEET No.	TOTAL SHEETS
12	Ora	241	15.5/39.0	40	117

Lindsay M. Kaufmann 09/01/10
REGISTERED CIVIL ENGINEER DATE

10-18-10
PLANS APPROVAL DATE

REGISTERED PROFESSIONAL ENGINEER LINDSAY M. KAUFMANN No. C71806 Exp. 12/31/11 CIVIL STATE OF CALIFORNIA

THE STATE OF CALIFORNIA OR ITS OFFICERS OR AGENTS SHALL NOT BE RESPONSIBLE FOR THE ACCURACY OR COMPLETENESS OF SCANNED COPIES OF THIS PLAN SHEET.

RBF CONSULTING
14725 ALTON PKWY
IRVINE, CA. 92618-2027

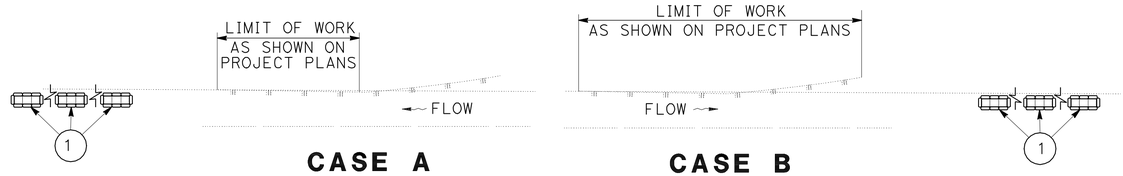

CASE A PLANVIEW **CASE B PLANVIEW**

TYPICAL WPC PLACEMENT NOTCH BLOCK REPLACEMENT LOCATIONS

SEE SHEET C-1 TO C-3 FOR NOTCH BLOCK REPLACEMENT STATIONING

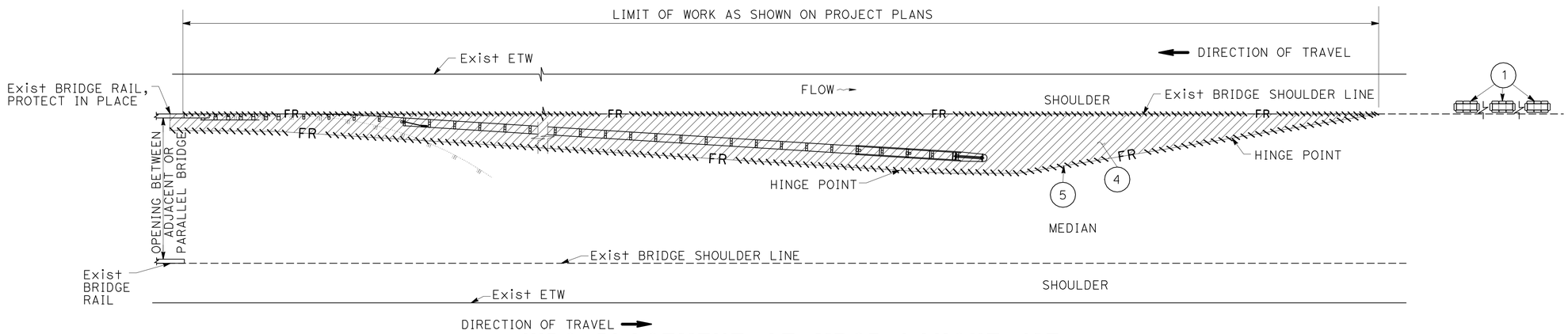

WPC PLACEMENT AT MBGR LAYOUT 12E PER CALTRANS Std PLAN A77F3

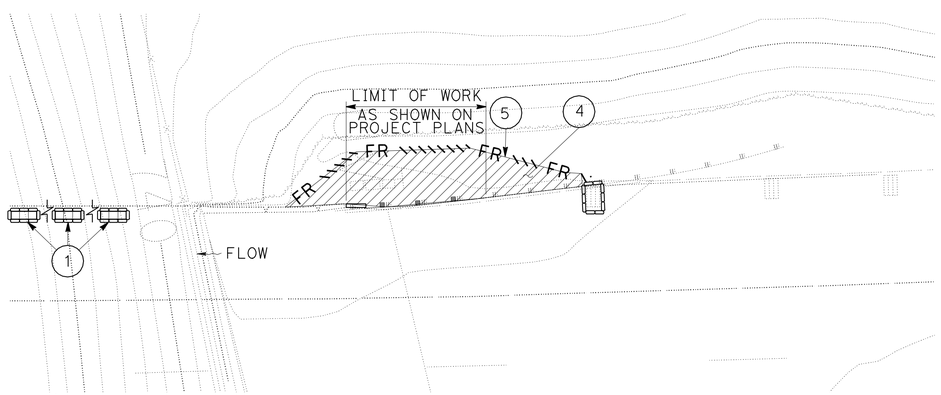

WPC PLACEMENT MBGR TRANSITION RAILING (TYPE WB) UPGRADE DETAIL

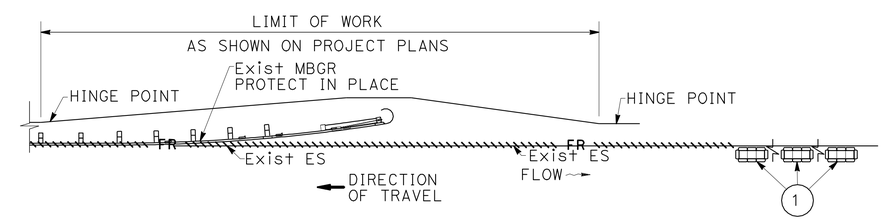

WPC PLACEMENT ATMBGR TERMINAL SYSTEM & TYPICAL GRADING DETAIL PER CALTRANS Std PLAN A77E1 & A77L1

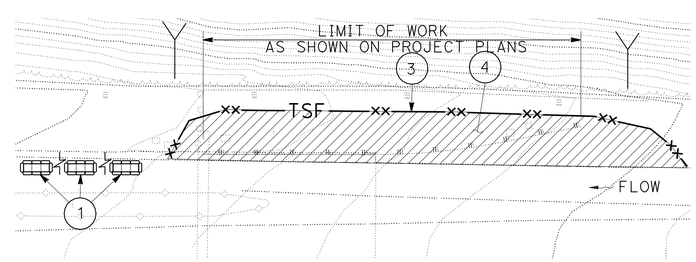

WPC PLACEMENT REMOVE MBGR

TEMPORARY WATER POLLUTION CONTROL PLAN

NO SCALE

WPC-2

STATE OF CALIFORNIA - DEPARTMENT OF TRANSPORTATION
Caltrans
CONSULTANT FUNCTIONAL SUPERVISOR: MIKE CHESNEY
CALCULATED-DESIGNED BY: LINDSAY KAUFMANN
CHECKED BY: LINDSAY KAUFMANN
REVISED BY: RK/WT
DATE REVISED: 07/22/10
LAST REVISION 06-08-10
DATE PLOTTED => 19-OCT-2010
TIME PLOTTED => 14:12

H:\pdata\10106739\CADD\TransPW\Div\Merge\8-24-10\c0G370gb002.dgn trlenard 19-OCT-2010 14:12

BORDER LAST REVISED 7/2/2010 | USERNAME => trlenard | DGN FILE => c0G370gb002.dgn | RELATIVE BORDER SCALE IS IN INCHES 0 1 2 3 | UNIT 2998 | PROJECT NUMBER & PHASE 12000001431

Dist	COUNTY	ROUTE	POST MILES TOTAL PROJECT	SHEET No.	TOTAL SHEETS
12	Ora	241	15.5/39.0	41	117

Lindsay M. Kaufmann 09/30/10
REGISTERED CIVIL ENGINEER DATE

10-18-10
PLANS APPROVAL DATE

REGISTERED PROFESSIONAL ENGINEER LINDSAY M. KAUFMANN No. C71806 Exp. 12/31/11 CIVIL STATE OF CALIFORNIA

THE STATE OF CALIFORNIA OR ITS OFFICERS OR AGENTS SHALL NOT BE RESPONSIBLE FOR THE ACCURACY OR COMPLETENESS OF SCANNED COPIES OF THIS PLAN SHEET.

RBF CONSULTING
14725 ALTON PKWY
IRVINE, CA. 92618-2027

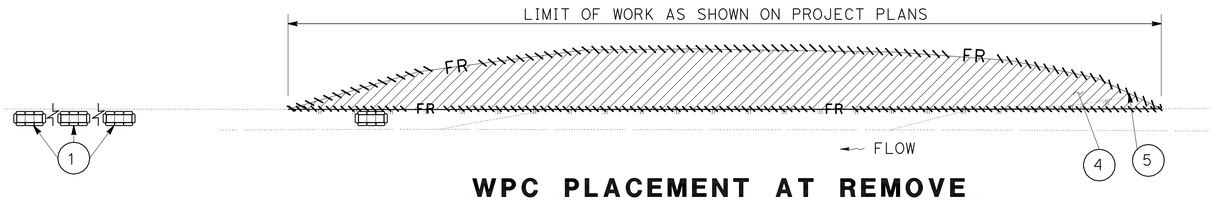

WPC PLACEMENT AT REMOVE AC DIKE AND PLACE HMA DIKE

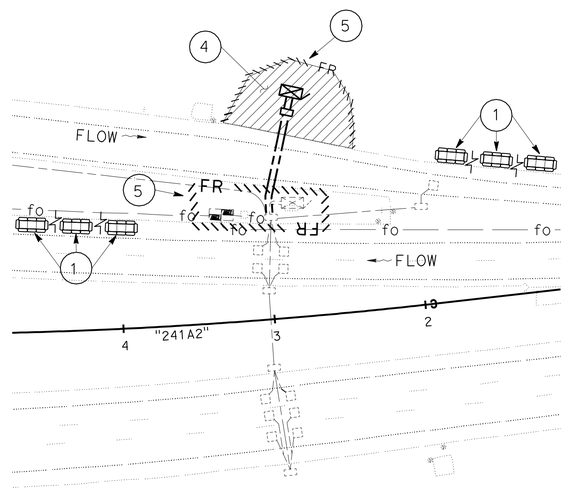

WPC PLACEMENT AT CONTROLLER CABINET RELOCATION

Sta 562+76 "241A2"

TEMPORARY WATER POLLUTION CONTROL

SHEET No.	DESCRIPTION	TEMPORARY FIBER ROLL	TEMPORARY SILT FENCE	TEMPORARY CHECK DAM	TEMPORARY DRAINAGE INLET PROTECTION	TEMPORARY HYDRAULIC MULCH (BONDED FIBER MATRIX)
		LF	LF	LF	EA	SQYD
WPC-2/WPC-3	TEMPORARY WATER POLLUTION CONTROL	76,100				
WPC-2	TEMPORARY WATER POLLUTION CONTROL		13,000	4,400		
WPC-2/WPC-3	TEMPORARY WATER POLLUTION CONTROL					
WPC-2/WPC-3	TEMPORARY WATER POLLUTION CONTROL				660	
WPC-2/WPC-3	TEMPORARY WATER POLLUTION CONTROL					11,900
	TOTAL	76,100	13,000	4,400	660	11,900

TEMPORARY WATER POLLUTION CONTROL PLAN

NO SCALE

WPC-3

LAST REVISION 06-08-10 | DATE PLOTTED => 19-OCT-2010 | TIME PLOTTED => 14:13

STATE OF CALIFORNIA - DEPARTMENT OF TRANSPORTATION
Caltrans
CONSULTANT FUNCTIONAL SUPERVISOR: MIKE CHESNEY
CALCULATED-DESIGNED BY: LINDSAY KAUFMANN
CHECKED BY: LINDSAY KAUFMANN
REVISED BY: RK/WT
DATE REVISED: 07/22/10

H:\pdata\10106739\CADD\TransPW\Div\Merge\HOE COMMENTS 9-21-10\c0G370gb003.dgn trlenard 19-OCT-2010 14:13

BORDER LAST REVISED 7/2/2010 | USERNAME => trlenard | DGN FILE => c0G370gb003.dgn | RELATIVE BORDER SCALE IS IN INCHES 0 1 2 3 | UNIT 2998 | PROJECT NUMBER & PHASE 12000001431

Dist	COUNTY	ROUTE	POST MILES TOTAL PROJECT	SHEET No.	TOTAL SHEETS
12	Ora	241	15.5/39.0	42	117

Lindsay M. Kaufmann 09/01/10
REGISTERED CIVIL ENGINEER DATE

10-18-10
PLANS APPROVAL DATE

REGISTERED PROFESSIONAL ENGINEER LINDSAY M. KAUFMANN No. C71806 Exp. 12/31/11 CIVIL STATE OF CALIFORNIA

THE STATE OF CALIFORNIA OR ITS OFFICERS OR AGENTS SHALL NOT BE RESPONSIBLE FOR THE ACCURACY OR COMPLETENESS OF SCANNED COPIES OF THIS PLAN SHEET.

RBF CONSULTING
14725 ALTON PKWY
IRVINE, CA. 92618-2027

NOTE:

LENGTHS SHOWN ARE BASED ON SURVEY DATA & FIELD MEASUREMENTS. THEY ARE NOT EXACT CALCULATIONS PER STATION LIMITS SHOWN.

REMOVE MBGR

SHEET No.	DESCRIPTION	STATION LIMITS	LOCATION	REMOVE MBGR LF
C-4	MBGR LAYOUT 12E	"241A1" 2086+01.47 TO "241A1" 2086+97.95	R+	102.5
C-4	MBGR LAYOUT 12E	"241A1" 2088+19.69 TO "241A1" 2089+15.77	L+	100.6
C-4	MBGR LAYOUT 12E	"241A1" 2153+58.61 TO "241A1" 2154+53.28	R+	102.5
C-4	MBGR LAYOUT 12E	"241A1" 2157+38.83 TO "241A1" 2158+39.75	L+	100.3
C-4	MBGR LAYOUT 12E	"241A1" 2158+06.07 TO "241A1" 2159+02.44	L+	100.2
C-4	MBGR LAYOUT 12E	"241A1" 2258+65.33 TO "241A1" 2260+01.76	R+	137.6
C-4	MBGR LAYOUT 12E	"241A1" 2262+14.49 TO "241A1" 2263+14.75	L+	100.0
C-4	MBGR LAYOUT 12E	"241A1" 2315+51.27 TO "241A1" 2316+52.57	R+	100.3
C-4	MBGR LAYOUT 12E	"241A1" 2332+48.48 TO "241A1" 2333+42.19	L+	100.0
C-4	MBGR LAYOUT 12E	"241A1" 2345+77.69 TO "241A1" 2346+71.22	R+	99.7
C-4	MBGR LAYOUT 12E	"241A1" 2358+40.10 TO "241A1" 2359+35.90	L+	100.1
C-4	MBGR LAYOUT 12E	"241A1" 2484+91.67 TO "241A1" 2485+88.80	R+	102.7
C-4	MBGR LAYOUT 12E	"241A1" 2487+84.79 TO "241A1" 2488+79.15	L+	98.7
C-4	MBGR LAYOUT 12E	"241A3" 654+43.01 TO "241A3" 655+11.20	R+	75.3
C-4	MBGR LAYOUT 12E	"241A3" 668+26.52 TO "241A3" 668+98.65	L+	75.5
C-4	MBGR LAYOUT 12E	"241A3" 712+83.95 TO "241A3" 713+54.89	R+	74.9
C-4	MBGR LAYOUT 12E	"241A3" 755+65.58 TO "241A3" 756+35.98	R+	75.0
C-4	MBGR LAYOUT 12E	"241A3" 817+49.81 TO "241A3" 818+19.39	L+	74.5
C-4	MBGR LAYOUT 12E	"241NW91" 3929+52.66 TO "241NW91" 3931+02.43	L+	153.5
C-5	TERMINAL SYSTEM UPGRADE	"241A1" 2175+38.63 TO "241A1" 2175+74.57	R+	37.5
C-5	TERMINAL SYSTEM UPGRADE	"241A1" 2175+46.11 TO "241A1" 2175+81.35	R+	37.5
C-5	TERMINAL SYSTEM UPGRADE	"241A1" 2187+29.55 TO "241A1" 2187+67.79	L+	37.5
C-5	TERMINAL SYSTEM UPGRADE	"241A1" 2197+25.29 TO "241A1" 2197+62.46	L+	37.5
C-5	TERMINAL SYSTEM UPGRADE	"241A1" 2205+80.86 TO "241A1" 2206+18.32	R+	37.5
C-5	TERMINAL SYSTEM UPGRADE	"241A1" 2209+65.05 TO "241A1" 2209+65.87	L+	37.5
C-5	TERMINAL SYSTEM UPGRADE	"241A1" 2213+29.91 TO "241A1" 2213+67.35	R+	37.5
C-5	TERMINAL SYSTEM UPGRADE	"241A1" 2219+30.33 TO "241A1" 2219+67.61	L+	37.5
C-5	TERMINAL SYSTEM UPGRADE	"241A1" 2245+85.08 TO "241A1" 2246+23.76	L+	37.5
C-5	TERMINAL SYSTEM UPGRADE	"241A1" 2280+30.83 TO "241A1" 2280+68.84	R+	37.5
C-5	TERMINAL SYSTEM UPGRADE	"241A1" 2296+71.85 TO "241A1" 2297+09.03	R+	37.5
C-5	TERMINAL SYSTEM UPGRADE	"241A1" 2301+73.97 TO "241A1" 2302+10.37	L+	37.5
C-5	TERMINAL SYSTEM UPGRADE	"241A1" 2361+29.58 TO "241A1" 2361+66.74	L+	37.5
C-5	TERMINAL SYSTEM UPGRADE	"241A1" 2372+49.54 TO "241A1" 2372+86.77	R+	37.5
C-5	TERMINAL SYSTEM UPGRADE	"241A1" 2391+37.76 TO "241A1" 2391+74.73	R+	37.5
C-5	TERMINAL SYSTEM UPGRADE	"241A1" 2397+13.20 TO "241A1" 2397+38.51	L+	37.5
C-5	TERMINAL SYSTEM UPGRADE	"241A1" 2410+64.44 TO "241A1" 2411+01.67	L+	37.5
C-5	TERMINAL SYSTEM UPGRADE	"241A1" 2414+47.61 TO "241A1" 2414+84.90	R+	37.5
C-5	TERMINAL SYSTEM UPGRADE	"241A1" 2419+08.28 TO "241A1" 2419+39.60	R+	37.5
C-5	TERMINAL SYSTEM UPGRADE	"241A1" 2428+97.85 TO "241A1" 2429+37.48	L+	37.5
C-5	TERMINAL SYSTEM UPGRADE	"241A1" 2452+19.75 TO "241A1" 2452+55.99	L+	37.5
C-5	TERMINAL SYSTEM UPGRADE	"241A1" 2468+38.86 TO "241A1" 2468+74.76	L+	37.5
C-5	TERMINAL SYSTEM UPGRADE	"241A1" 2476+71.43 TO "241A1" 2476+96.34	L+	37.5
C-5	TERMINAL SYSTEM UPGRADE	"241A1" 2479+54.41 TO "241A1" 2479+77.17	R+	37.5
C-5	TERMINAL SYSTEM UPGRADE	"241A1" 2481+98.55 TO "241A1" 2482+35.93	L+	37.5
C-5	TERMINAL SYSTEM UPGRADE	"241A1" 2484+86.52 TO "241A1" 2485+23.14	R+	37.5
C-5	TERMINAL SYSTEM UPGRADE	"241A1" 2484+92.26 TO "241A1" 2485+28.95	R+	37.5
C-5	TERMINAL SYSTEM UPGRADE	"241A1" 2485+13.94 TO "241A1" 2485+49.27	R+	37.5
C-5	TERMINAL SYSTEM UPGRADE	"241A1" 2529+40.82 TO "241A1" 2529+78.11	L+	37.5
			SUBTOTAL	2961.4

REMOVE MBGR

SHEET No.	DESCRIPTION	STATION LIMITS	LOCATION	REMOVE MBGR LF
C-5	TERMINAL SYSTEM UPGRADE	"241A1" 2538+16.24 TO "241A1" 2538+53.28	L+	37.5
C-5	TERMINAL SYSTEM UPGRADE	"241A1" 2541+78.68 TO "241A1" 2542+16.15	R+	37.5
C-5	TERMINAL SYSTEM UPGRADE	"241A1" 2553+14.81 TO "241A1" 2553+50.72	L+	37.5
C-5	TERMINAL SYSTEM UPGRADE	"241SB1" 280+51.47 TO "241SB1" 280+83.17	L+	32.0
C-5	TERMINAL SYSTEM UPGRADE	"241CH8" 31+11.26 TO "241CH8" 31+41.35	L+	30.6
C-5	TERMINAL SYSTEM UPGRADE	"241A3" 758+87.39 TO "241A3" 759+17.44	L+	30.1
C-7	TRANSITION RAILING (TYPE WB)	"241A1" 2086+67.91 TO "241A1" 2087+00.06	R+	32.2
C-7	TRANSITION RAILING (TYPE WB)	"241A1" 2088+18.21 TO "241A1" 2088+50.40	L+	32.2
C-7	TRANSITION RAILING (TYPE WB)	"241A1" 2154+68.61 TO "241A1" 2154+99.51	R+	31.7
C-7	TRANSITION RAILING (TYPE WB)	"241A1" 2157+10.50 TO "241A1" 2157+45.43	L+	33.7
C-7	TRANSITION RAILING (TYPE WB)	"241A1" 2227+12.48 TO "241A1" 2227+38.39	R+	25.9
C-7	TRANSITION RAILING (TYPE WB)	"241A1" 2241+91.05 TO "241A1" 2242+17.18	L+	26.0
C-7	TRANSITION RAILING (TYPE WB)	"241A1" 2241+97.17 TO "241A1" 2242+31.48	L+	33.2
C-7	TRANSITION RAILING (TYPE WB)	"241A1" 2259+77.92 TO "241A1" 2260+09.19	R+	32.5
C-7	TRANSITION RAILING (TYPE WB)	"241A1" 2262+21.08 TO "241A1" 2262+55.40	L+	33.2
C-7	TRANSITION RAILING (TYPE WB)	"241A1" 2316+17.58 TO "241A1" 2316+50.18	R+	31.9
C-7	TRANSITION RAILING (TYPE WB)	"241A1" 2346+12.29 TO "241A1" 2346+40.79	R+	29.1
C-7	TRANSITION RAILING (TYPE WB)	"241A1" 2358+66.59 TO "241A1" 2359+00.34	L+	33.2
C-7	TRANSITION RAILING (TYPE WB)	"241A1" 2392+81.86 TO "241A1" 2393+13.76	R+	32.0
C-7	TRANSITION RAILING (TYPE WB)	"241A1" 2396+80.05 TO "241A1" 2397+01.35	L+	21.3
C-7	TRANSITION RAILING (TYPE WB)	"241A1" 2419+45.57 TO "241A1" 2419+71.82	R+	26.3
C-7	TRANSITION RAILING (TYPE WB)	"241A1" 2422+23.16 TO "241A1" 2422+51.42	L+	28.3
C-7	TRANSITION RAILING (TYPE WB)	"241A1" 2426+46.61 TO "241A1" 2426+78.79	R+	32.3
C-7	TRANSITION RAILING (TYPE WB)	"241A1" 2428+64.71 TO "241A1" 2428+97.86	L+	33.2
C-7	TRANSITION RAILING (TYPE WB)	"241A1" 2443+08.20 TO "241A1" 2443+40.34	R+	32.1
C-7	TRANSITION RAILING (TYPE WB)	"241A1" 2446+58.09 TO "241A1" 2446+91.24	L+	33.2
C-7	TRANSITION RAILING (TYPE WB)	"241A1" 2485+53.42 TO "241A1" 2485+85.07	R+	32.5
C-7	TRANSITION RAILING (TYPE WB)	"241A1" 2485+55.17 TO "241A1" 2485+86.30	R+	32.2
C-7	TRANSITION RAILING (TYPE WB)	"241A1" 2485+59.21 TO "241A1" 2485+90.92	R+	32.3
C-7	TRANSITION RAILING (TYPE WB)	"241A1" 2487+91.60 TO "241A1" 2488+25.65	L+	33.2
C-7	TRANSITION RAILING (TYPE WB)	"241SB1" 280+83.17 TO "241SB1" 280+51.47	L+	32.1
C-7	TRANSITION RAILING (TYPE WB)	"241WS133" 93+70.21 TO "241WS133" 94+02.50	L+	32.3
		SUBTOTAL		1012.7
		SHEET TOTAL		3974.1

SUMMARY OF QUANTITIES

Q-1

STATE OF CALIFORNIA - DEPARTMENT OF TRANSPORTATION
Caltrans

CONSULTANT FUNCTIONAL SUPERVISOR: MIKE CHESNEY
CALCULATED-DESIGNED BY: LINDSAY KAUFMANN
CHECKED BY: LINDSAY KAUFMANN
REVISED BY: RK/WT
DATE REVISED: 07/22/10

H:\pdata\10106739\CADD\TransPW\Div\Merge\8-24-10\c0G370pa001.dgn trlenard 19-OCT-2010 14:13

LAST REVISION 06-08-10 | DATE PLOTTED => 19-OCT-2010 | TIME PLOTTED => 14:13

Dist	COUNTY	ROUTE	POST MILES TOTAL PROJECT	SHEET No.	TOTAL SHEETS
12	Ora	241	15.5/39.0	43	117

Lindsay M. Kaufmann 09/01/10
REGISTERED CIVIL ENGINEER DATE

10-18-10
PLANS APPROVAL DATE

REGISTERED PROFESSIONAL ENGINEER LINDSAY M. KAUFMANN No. C71806 Exp. 12/31/11 CIVIL STATE OF CALIFORNIA

THE STATE OF CALIFORNIA OR ITS OFFICERS OR AGENTS SHALL NOT BE RESPONSIBLE FOR THE ACCURACY OR COMPLETENESS OF SCANNED COPIES OF THIS PLAN SHEET.

RBF CONSULTING
14725 ALTON PKWY
IRVINE, CA. 92618-2027

NOTE:

LENGTHS SHOWN ARE BASED ON SURVEY DATA & FIELD MEASUREMENTS. THEY ARE NOT EXACT CALCULATIONS PER STATION LIMITS SHOWN.

REMOVE MBGR

SHEET No.	DESCRIPTION	STATION LIMITS	LOCATION	REMOVE MBGR LF
C-7	TRANSITION RAILING (TYPE WB)	"241WS133" 110+16.44 TO "241WS133" 110+46.91	R+	31.7
C-7	TRANSITION RAILING (TYPE WB)	"241B1" 393+98.79 TO "241B1" 394+30.72	R+	31.9
C-7	TRANSITION RAILING (TYPE WB)	"241B1" 396+07.27 TO "241B1" 396+39.43	L+	32.0
C-7	TRANSITION RAILING (TYPE WB)	"241CH8" 31+20.20 TO "241CH8" 31+52.14	R+	31.9
C-7	TRANSITION RAILING (TYPE WB)	"241CH8" 31+41.35 TO "241CH8" 31+73.24	L+	31.9
C-7	TRANSITION RAILING (TYPE WB)	"241A3" 654+77.17 TO "241A3" 655+09.53	R+	32.4
C-7	TRANSITION RAILING (TYPE WB)	"241A3" 668+24.42 TO "241A3" 668+56.41	L+	32.0
C-7	TRANSITION RAILING (TYPE WB)	"241A3" 713+14.11 TO "241A3" 713+47.11	R+	32.4
C-7	TRANSITION RAILING (TYPE WB)	"241A3" 716+62.79 TO "241A3" 716+94.62	L+	32.4
C-7	TRANSITION RAILING (TYPE WB)	"241A3" 756+10.46 TO "241A3" 756+42.39	R+	32.3
C-7	TRANSITION RAILING (TYPE WB)	"241A3" 758+55.29 TO "241A3" 758+87.38	L+	31.8
C-7	TRANSITION RAILING (TYPE WB)	"241A3" 814+91.31 TO "241A3" 815+23.05	R+	31.8
C-7	TRANSITION RAILING (TYPE WB)	"241A3" 817+40.37 TO "241A3" 817+72.25	L+	31.9
C-7	TRANSITION RAILING (TYPE WB)	"91WS241" 5923+40.61 TO "91WS241" 5923+72.74	R+	32.1
C-7	TRANSITION RAILING (TYPE WB)	"91WS241" 5923+68.07 TO "91WS241" 5923+99.71	L+	32.1
C-7	TRANSITION RAILING (TYPE WB)	"241NW91" 3930+71.65 TO "241NW91" 3931+02.98	R+	31.8
C-7	TRANSITION RAILING (TYPE WB)	"241NE91" 6930+72.96 TO "241NE91" 6931+05.38	R+	32.1
C-8	REMOVE MBGR	"241A1" 2176+89.92 TO "241A1" 2177+81.14	L+	87.8
C-8	REMOVE MBGR	"241A1" 2290+57.64 TO "241A1" 2291+57.41	R+	100.1
C-8	REMOVE MBGR	"241A1" 2290+63.70 TO "241A1" 2291+50.70	R+	87.3
C-8	REMOVE MBGR	"241A1" 2298+72.36 TO "241A1" 2299+71.72	L+	100.0
C-8	REMOVE MBGR	"241A1" 2298+78.46 TO "241A1" 2299+64.82	L+	87.3
C-8	REMOVE MBGR	"241A1" 2383+87.04 TO "241A1" 2385+12.02	R+	125.4
C-8	REMOVE MBGR	"241A1" 2384+11.29 TO "241A1" 2385+24.65	R+	114.0
C-8	REMOVE MBGR	"241A1" 2386+92.41 TO "241A1" 2387+04.70	L+	112.6
C-8	REMOVE MBGR	"241A1" 2386+99.04 TO "241A1" 2387+73.51	L+	75.0
C-8	REMOVE MBGR	"241A1" 2458+00.22 TO "241A1" 2458+60.11	L+	62.6
C-11	LOCATION 2	"241A1" 2111+30.24 TO "241A1" 2111+67.02	L+	37.3
C-11	LOCATION 2	"241A1" 2114+60.32 TO "241A1" 2115+34.54	L+	75.5
C-11	LOCATION 2	"241A1" 2117+98.28 TO "241A1" 2118+66.06	L+	75.0
C-12	LOCATION 3	"241A1" 2157+74.89 TO "241A1" 2158+70.52	L+	100.5
C-12	LOCATION 4	"241A1" 2169+14.65 TO "241A1" 2170+12.42	R+	100.7
C-13	LOCATION 7	"241A1" 2213+34.13 TO "241A1" 2213+70.75	R+	36.9
C-13	LOCATION 8	"241A1" 2219+06.28 TO "241A1" 2219+80.88	R+	74.8
C-13	LOCATION 9	"241A1" 2224+05.48 TO "241A1" 2225+19.32	R+	114.1
C-13	LOCATION 10	"241A1" 2254+32.03 TO "241A1" 2255+05.13	R+	76.2
C-14	LOCATION 11	"241A1" 2262+82.49 TO "241A1" 2263+21.09	L+	37.8
C-14	LOCATION 14	"241A1" 2299+96.23 TO "241A1" 2300+70.32	R+	75.0
C-15	LOCATION 15	"241A1" 2304+01.23 TO "241A1" 2304+13.56	L+	75.0
C-15	LOCATION 15	"241A1" 2305+25.49 TO "241A1" 2305+62.79	L+	43.9
C-15	LOCATION 16	"241A1" 2312+42.48 TO "241A1" 2312+55.34	R+	12.5
C-15	LOCATION 17	"241A1" 2332+51.81 TO "241A1" 2333+47.06	L+	102.6
C-16	LOCATION 18	"241A1" 2345+72.16 TO "241A1" 2346+10.14	L+	38.9
C-16	LOCATION 21	"241A1" 2391+33.50 TO "241A1" 2391+70.90	R+	53.4
C-18	LOCATION 25	"241A1" 2442+40.12 TO "241A1" 2442+52.61	L+	12.5
C-18	LOCATION 26	"241A1" 2457+17.02 TO "241A1" 2458+06.65	R+	87.5
C-19	LOCATION 27	"241A1" 2465+91.96 TO "241A1" 2466+77.10	L+	87.5
		SUBTOTAL		2814.3

REMOVE MBGR

SHEET No.	DESCRIPTION	STATION LIMITS	LOCATION	REMOVE MBGR LF
C-19	LOCATION 28	"241A1" 2474+62.19 TO "241A1" 2475+00.00	R+	37.8
C-19	LOCATION 29	"241A1" 2474+54.21 TO "241A1" 2476+23.14	R+	175.0
C-19	LOCATION 30	"241A1" 2479+53.97 TO "241A1" 2480+34.87	L+	81.1
C-19	LOCATION 31	"241A1" 2480+23.76 TO "241A1" 2482+38.72	L+	221.3
C-19	LOCATION 32	"241A1" 2487+84.16 TO "241A1" 2488+88.04	L+	102.8
C-19	LOCATION 32	"241A1" 2487+91.85 TO "241A1" 2488+88.04	L+	97.1
C-20	LOCATION 33	"241A1" 2489+96.93 TO "241A1" 2490+35.25	L+	37.4
C-20	LOCATION 33	"241A1" 2497+65.56 TO "241A1" 2498+29.17	L+	62.5
C-20	LOCATION 33	"241A1" 2500+52.64 TO "241A1" 2504+96.71	L+	437.4
C-21	LOCATION 34	"241A1" 2503+50.08 TO "241A1" 2505+11.48	R+	163.1
C-21	LOCATION 35	"241A1" 2508+99.39 TO "241A1" 2509+86.89	R+	87.7
C-21	LOCATION 36	"241A1" 2511+26.86 TO "241A1" 2512+02.07	L+	75.2
C-21	LOCATION 37	"241A1" 2516+91.73 TO "241A1" 2522+30.19	R+	539.3
C-21	LOCATION 38	"241A1" 2523+90.80 TO "241A1" 2524+28.07	L+	37.6
C-21	LOCATION 38	"241A1" 2527+78.41 TO "241A1" 2527+90.91	L+	12.5
C-21	LOCATION 39	"241A1" 2526+25.40 TO "241A1" 2528+01.50	R+	176.4
C-22	LOCATION 40	"241A1" 2536+69.95 TO "241A1" 2537+07.08	R+	37.9
C-22	LOCATION 42	"241NP2" 2570+93.71 TO "241NP2" 2571+31.00	L+	37.8
C-23	LOCATION 43	"241A1" 2574+89.65 TO "241A1" 2590+88.43	R+	1599.0
C-24	LOCATION 44	"241A1" 2596+82.40 TO "241A1" 2596+94.90	R+	12.5
C-24	LOCATION 46	"241A1" 2613+63.88 TO "241A1" 2613+76.38	L+	12.5
C-24	LOCATION 47	"241SB1" 273+30.43 TO "241SB1" 274+04.99	L+	77.3
C-25	LOCATION 48	"241WS133" 95+61.74 TO "241WS133" 96+89.17	R+	132.9
C-25	LOCATION 49	"241NB1" 298+15.74 TO "241NB1" 298+28.41	R+	12.5
C-25	LOCATION 50	"241SB1" 322+02.39 TO "241SB1" 322+94.38	L+	98.2
C-25	LOCATION 50	"241SB1" 326+72.42 TO "241SB1" 328+00.46	L+	128.6
C-25	LOCATION 50	"241S133" 67+69.95 TO "241S133" 69+15.99	R+	147.4
C-26	LOCATION 52	"241B1" 382+53.44 TO "241B1" 382+90.58	R+	37.4
C-26	LOCATION 53	"241B1" 397+86.66 TO "241B1" 398+23.700	R+	37.5
C-26	LOCATION 55	"241B1" 447+70.73 TO "241B1" 447+83.23	R+	12.5
C-27	LOCATION 58	"241NBR1" 1582+70.31 TO "241NBR1" 1584+54.45	R+	181.1
		SUBTOTAL		4909.3
		SHEET TOTAL		7723.6

SUMMARY OF QUANTITIES

Q-2

STATE OF CALIFORNIA - DEPARTMENT OF TRANSPORTATION
Caltrans

CONSULTANT FUNCTIONAL SUPERVISOR: MIKE CHESNEY
CALCULATED-DESIGNED BY: LINDSAY KAUFMANN
CHECKED BY: LINDSAY KAUFMANN
REVISED BY: RK/WT
DATE REVISED: 07/22/10

H:\pdata\10106739\CADD\TransPW\Div\Merge\8-24-10\c0G370pa002.dgn trlenard 19-OCT-2010 14:13

LAST REVISION 06-08-10 | DATE PLOTTED => 19-OCT-2010 | TIME PLOTTED => 14:13

Dist	COUNTY	ROUTE	POST MILES TOTAL PROJECT	SHEET No.	TOTAL SHEETS
12	Ora	241	15.5/39.0	44	117

Lindsay M. Kaufmann 09/01/10
REGISTERED CIVIL ENGINEER DATE

10-18-10
PLANS APPROVAL DATE

REGISTERED PROFESSIONAL ENGINEER
LINDSAY M. KAUFMANN
No. C71806
Exp. 12/31/11
CIVIL
STATE OF CALIFORNIA

THE STATE OF CALIFORNIA OR ITS OFFICERS OR AGENTS SHALL NOT BE RESPONSIBLE FOR THE ACCURACY OR COMPLETENESS OF SCANNED COPIES OF THIS PLAN SHEET.

RBF CONSULTING
14725 ALTON PKWY
IRVINE, CA. 92618-2027

NOTE:

LENGTHS SHOWN ARE BASED ON SURVEY DATA & FIELD MEASUREMENTS. THEY ARE NOT EXACT CALCULATIONS PER STATION LIMITS SHOWN.

REMOVE MBGR

SHEET No.	DESCRIPTION	STATION LIMITS	LOCATION	REMOVE MBGR LF
C-28	LOCATION 60	"241CH7" 34+21.85 TO "241CH7" 35+08.72	R+	87.5
C-28	LOCATION 61	"241A3" 716+72.94 TO "241A3" 717+56.77	L+	87.3
C-28	LOCATION 62	"241SBTOLL1" 776+93.39 TO "241SBTOLL1" 777+55.76	L+	62.5
C-29	LOCATION 65	"241NBTOLL1" 800+81.91 TO "241NBTOLL1" 801+61.33	R+	81.1
C-29	LOCATION 66	"241SBTOLL1" 803+50.73 TO "241A3" 804+67.97	L+	77.0
C-29	LOCATION 67	"91ES241" 4918+68.56 TO "91ES241" 4919+18.27	L+	50.3
C-30	LOCATION 68	"91ES241" 4925+00.39 TO "91ES241" 4925+89.86	L+	87.5
C-30	LOCATION 69	"241NE91" 6929+90.49 TO "241NE91" 6930+92.13	L+	106.6
		SUBTOTAL		639.8
		TOTAL FROM SHEET Q-1		3974.1
		TOTAL FROM SHEET Q-2		7723.6
		GRAND TOTAL		12337.5

SUMMARY OF QUANTITIES

Q-3

Dist	COUNTY	ROUTE	POST MILES TOTAL PROJECT	SHEET No.	TOTAL SHEETS
12	Ora	241	15.5/39.0	45	117

Lindsay M. Kaufmann 09/01/10
REGISTERED CIVIL ENGINEER DATE

10-18-10
PLANS APPROVAL DATE

REGISTERED PROFESSIONAL ENGINEER LINDSAY M. KAUFMANN No. C71806 Exp. 12/31/11 CIVIL STATE OF CALIFORNIA

THE STATE OF CALIFORNIA OR ITS OFFICERS OR AGENTS SHALL NOT BE RESPONSIBLE FOR THE ACCURACY OR COMPLETENESS OF SCANNED COPIES OF THIS PLAN SHEET.

RBF CONSULTING
14725 ALTON PKWY
IRVINE, CA. 92618-2027

RECONSTRUCT MBGR

SHEET No.	STATION LIMITS	LOCATION	RECONSTRUCT MBGR (NOTCH BLOCK REPLACEMENT) LF
C-1	"241A1" 2052+12.17 TO "241A1" 2068+00.55	R+	1574.8
C-1	"241A1" 2064+92.30 TO "241A1" 2065+29.61	L+	37.3
C-1	"241A1" 2077+50.47 TO "241A1" 2086+99.46	L+	949.2
C-1	"241A1" 2086+61.66 TO "241A1" 2086+67.91	R+	6.3
C-1	"241A1" 2088+50.40 TO "241A1" 2088+56.95	L+	6.6
C-1	"241A1" 2090+68.25 TO "241A1" 2103+38.93	L+	1286.8
C-1	"241A1" 2095+44.48 TO "241A1" 2096+11.18	R+	66.5
C-1	"241A1" 2105+75.48 TO "241A1" 2111+30.24	L+	562.0
C-1	"241A1" 2105+79.87 TO "241A1" 2109+22.57	R+	339.4
C-1	"241A1" 2113+98.62 TO "241A1" 2115+08.29	R+	109.9
C-1	"241A1" 2129+00.09 TO "241A1" 2131+12.55	L+	212.5
C-1	"241A1" 2137+25.18 TO "241A1" 2138+87.56	L+	162.4
C-1	"241A1" 2143+09.24 TO "241A1" 2144+07.77	R+	99.4
C-1	"241A1" 2146+96.55 TO "241A1" 2148+44.89	R+	151.8
C-1	"241A1" 2147+82.94 TO "241A1" 2152+83.24	L+	487.1
C-1	"241A1" 2154+01.78 TO "241A1" 2154+68.61	R+	68.5
C-1	"241A1" 2157+45.43 TO "241A1" 2158+07.64	L+	61.8
C-1	"241A1" 2159+47.01 TO "241A1" 2163+34.44	R+	411.8
C-1	"241A1" 2175+74.57 TO "241A1" 2176+34.60	R+	62.4
C-1	"241A1" 2175+81.35 TO "241A1" 2176+29.11	R+	50.0
C-1	"241A1" 2176+82.00 TO "241A1" 2177+84.43	L+	99.9
C-1	"241A1" 2176+82.22 TO "241A1" 2177+84.73	L+	99.7
C-1	"241A1" 2186+91.03 TO "241A1" 2187+29.55	L+	37.5
C-1	"241A1" 2192+31.36 TO "241A1" 2192+56.05	R+	24.7
C-1	"241A1" 2196+87.69 TO "241A1" 2197+25.29	L+	37.5
C-1	"241A1" 2206+18.32 TO "241A1" 2206+55.71	R+	37.5
C-1	"241A1" 2209+10.85 TO "241A1" 2209+30.90	L+	56.0
C-1	"241A1" 2209+16.86 TO "241A1" 2209+34.12	L+	106.3
C-1	"241A1" 2209+65.05 TO "241A1" 2209+68.38	L+	26.0
C-1	"241A1" 2213+67.35 TO "241A1" 2214+04.58	R+	37.3
C-1	"241A1" 2213+70.75 TO "241A1" 2217+44.22	R+	37.5
C-1	"241A1" 2218+92.86 TO "241A1" 2219+30.33	L+	37.5
C-1	"241A1" 2242+19.25 TO "241A1" 2246+98.57	R+	497.6
C-1	"241A1" 2242+31.48 TO "241A1" 2245+85.08	L+	341.5
C-1	"241A1" 2280+68.84 TO "241A1" 2281+06.80	R+	37.5
C-1	"241A1" 2297+09.03 TO "241A1" 2299+96.23	R+	288.5
C-1	"241A1" 2300+61.98 TO "241A1" 2301+73.97	L+	112.4
C-1	"241A1" 2304+13.57 TO "241A1" 2305+25.49	L+	112.3
		SUBTOTAL	8733.6

RECONSTRUCT MBGR

SHEET No.	STATION LIMITS	LOCATION	RECONSTRUCT MBGR (NOTCH BLOCK REPLACEMENT) LF
C-1	"241A1" 2308+96.61 TO "241A1" 2316+50.17	L+	771.4
C-1	"241A1" 2315+86.12 TO "241A1" 2316+17.58	R+	30.8
C-1	"241A1" 2345+33.95 TO "241A1" 2345+72.16	L+	37.5
C-1	"241A1" 2345+94.43 TO "241A1" 2346+12.29	R+	18.3
C-1	"241A1" 2359+00.34 TO "241A1" 2361+29.58	L+	225.8
C-1	"241A1" 2372+86.77 TO "241A1" 2373+13.50	R+	26.8
C-1	"241A1" 2391+70.90 TO "241A1" 2391+97.18	R+	26.3
C-1	"241A1" 2391+74.73 TO "241A1" 2392+00.49	R+	25.8
C-1	"241A1" 2410+02.18 TO "241A1" 2410+64.44	L+	62.3
C-1	"241A1" 2414+84.90 TO "241A1" 2417+23.37	R+	238.5
C-1	"241A1" 2442+40.11 TO "241A1" 2444+21.15	L+	181.0
C-1	"241A1" 2446+91.24 TO "241A1" 2452+19.75	L+	537.4
C-1	"241A1" 2465+62.36 TO "241A1" 2468+38.86	L+	287.5
C-1	"241A1" 2471+09.89 TO "241A1" 2476+71.43	L+	587.5
C-1	"241A1" 2474+99.99 TO "241A1" 2475+24.93	R+	25.0
C-1	"241A1" 2476+78.55 TO "241A1" 2477+15.64	R+	37.1
C-2	"241A1" 2479+77.17 TO "241A1" 2482+43.81	R+	275.6
C-2	"241A1" 2481+73.87 TO "241A1" 2481+98.55	L+	25.0
C-2	"241A1" 2485+23.14 TO "241A1" 2485+53.42	R+	31.1
C-2	"241A1" 2485+28.95 TO "241A1" 2485+59.21	R+	30.8
C-2	"241A1" 2485+49.27 TO "241A1" 2485+55.17	R+	6.3
C-2	"241A1" 2488+25.65 TO "241A1" 2489+96.93	L+	167.2
C-2	"241A1" 2509+14.99 TO "241A1" 2511+27.07	L+	212.3
C-2	"241A1" 2509+86.89 TO "241A1" 2511+61.62	R+	175.0
C-2	"241A1" 2518+53.52 TO "241A1" 2523+90.80	L+	537.3
C-2	"241A1" 2527+78.41 TO "241A1" 2529+40.82	L+	162.4
C-2	"241A1" 2537+07.08 TO "241A1" 2537+56.98	R+	49.9
C-2	"241A1" 2537+78.97 TO "241A1" 2538+16.24	L+	37.3
C-2	"241A1" 2542+16.15 TO "241A1" 2544+64.93	R+	250.9
C-2	"241A1" 2547+23.82 TO "241A1" 2553+14.81	L+	599.5
C-2	"241A1" 2548+59.07 TO "241A1" 2548+96.46	R+	37.5
C-2	"241A1" 2556+11.18 TO "241A1" 2556+49.74	L+	37.5
C-2	"241A1" 2557+28.41 TO "241A1" 2558+10.36	R+	84.4
C-2	"241NP2" 2562+96.59 TO "241NP2" 2563+83.80	R+	87.2
C-2	"241A1" 2568+71.37 TO "241A1" 2569+70.84	R+	99.5
C-2	"241NP2" 2576+54.55 TO "241NP2" 2576+92.02	R+	37.5
C-2	"241A1" 2592+07.77 TO "241A1" 2593+56.28	L+	150.2
C-2	"241A1" 2596+02.41 TO "241A1" 2596+94.90	R+	93.1
C-2	"241A1" 2613+63.88 TO "241A1" 2614+01.35	L+	37.5
C-2	"241A1" 2620+46.62 TO "241NB1" 270+84.64	R+	1225.5
C-2	"241SBTOLL2" 2621+48.72 TO "241SB1" 273+30.43	L+	1359.9
C-2	"241NB1" 277+06.01 TO "241NB1" 277+44.18	R+	37.5
C-2	"241SB1" 279+19.05 TO "241SB1" 282+54.02	L+	343.4
C-2	"241SB1" 288+47.08 TO "241SB1" 288+84.46	L+	37.3
C-2	"241WS133" 87+39.31 TO "241WS133" 93+70.21	L+	631.3
C-2	"241SB1" 288+41.51 TO "133NE241" 89+22.34	L+	74.7
C-2	"133NE241" 94+08.36 TO "133NE241" 99+43.93	L+	518.7
		SUBTOTAL	10572.1
		SHEET TOTAL	19305.4

NOTE:

LENGTHS SHOWN ARE BASED ON SURVEY DATA & FIELD MEASUREMENTS. THEY ARE NOT EXACT CALCULATIONS PER STATION LIMITS SHOWN.

SUMMARY OF QUANTITIES

Q-4

LAST REVISION 06-08-10 | DATE PLOTTED => 19-OCT-2010 | TIME PLOTTED => 14:52

STATE OF CALIFORNIA - DEPARTMENT OF TRANSPORTATION
Caltrans
CONSULTANT FUNCTIONAL SUPERVISOR: MIKE CHESNEY
CALCULATED-DESIGNED BY: LINDSAY KAUFMANN
CHECKED BY: LINDSAY KAUFMANN
REVISED BY: RK/WT
DATE REVISED: 07/22/10

H:\pdata\10106739\CADD\TransPW\Div\Merge\8-24-10\c0G370pa004.dgn s135318 19-OCT-2010 14:52

Dist	COUNTY	ROUTE	POST MILES TOTAL PROJECT	SHEET No.	TOTAL SHEETS
12	Ora	241	15.5/39.0	46	117

Lindsay M. Kaufmann 09/01/10
REGISTERED CIVIL ENGINEER DATE

10-18-10
PLANS APPROVAL DATE

REGISTERED PROFESSIONAL ENGINEER LINDSAY M. KAUFMANN No. C71806 Exp.12/31/11 CIVIL STATE OF CALIFORNIA

THE STATE OF CALIFORNIA OR ITS OFFICERS OR AGENTS SHALL NOT BE RESPONSIBLE FOR THE ACCURACY OR COMPLETENESS OF SCANNED COPIES OF THIS PLAN SHEET.

RBF CONSULTING
14725 ALTON PKWY
IRVINE, CA. 92618-2027

RECONSTRUCT MBGR

SHEET No.	STATION LIMITS	LOCATION	RECONSTRUCT MBGR (NOTCH BLOCK REPLACEMENT) LF
C-2	"133NE241" 97+01.16 TO "133NE241" 99+67.32	R+	267.5
C-2	"241NB1" 305+72.61 TO "241NB1" 307+49.85	R+	174.9
C-2	"241WS133" 105+65.09 TO "241WS133" 110+16.44	R+	466.1
C-2	"241SB1" 305+87.56 TO "241SB1" 311+97.37	L+	618.0
C-2	"241SB1" 314+51.57 TO "241SB1" 317+35.32	L+	287.3
C-2	"241S133" 68+37.76 TO "241S133" 69+39.89	L+	100.8
C-2	"241NB1" 327+91.12 TO "241NB1" 329+95.08	R+	204.0
C-2	"241S133" 71+10.96 TO "241SB1" 347+18.07	L+	1724.2
C-2	"133N241" 9334+56.97 TO "241B1" 352+36.07	R+	1932.9
C-2	"241SB1" 334+32.90 TO "241SB1" 334+70.40	L+	37.5
C-2	"241B1" 374+85.19 TO "241B1" 375+55.73	R+	71.5
C-2	"241B1" 382+11.60 TO "241B1" 382+49.16	L+	37.6
C-2	"241B1" 382+90.64 TO "241B1" 393+98.79	R+	1108.1
C-2	"241B1" 396+39.43 TO "241B1" 396+45.03	L+	5.6
C-2	"241B1" 398+23.40 TO "241B1" 402+54.93	R+	438.1
C-2	"241B1" 418+36.28 TO "241B1" 430+04.25	R+	1187.1
C-2	"241B1" 435+92.05 TO "241B1" 436+29.97	L+	37.5
C-2	"241B1" 438+07.07 TO "241B1" 447+83.23	R+	986.3
C-2	"241B1" 496+37.50 TO "241B1" 504+06.25	R+	774.6
C-2	"241B1" 504+92.02 TO "241B1" 516+01.02	R+	1130.9
C-2	"241B1" 519+03.46 TO "241B1" 519+40.16	R+	37.5
C-2	"241A2" 529+81.04 TO "241A2" 535+09.84	R+	538.2
C-2	"241A2" 557+93.30 TO "241A2" 558+30.70	R+	37.5
C-2	"241A2" 568+04.75 TO "241NBR1" 1572+16.39	R+	411.8
C-2	"241SBR1" 2576+00.28 TO "241SBR1" 2581+61.81	L+	574.3
C-2	"241NBR1" 1589+39.28 TO "241NBR1" 1591+16.91	R+	174.9
C-2	"241SBR1" 2584+87.70 TO "241SBR1" 2593+61.19	L+	1016.4
C-2	"241SBR1" 2592+41.42 TO "241SBR1" 2593+92.29	L+	162.2
C-2	"241SBR1" 2593+45.73 TO "241SBR1" 2594+50.60	L+	106.3
C-2	"241CH8" 30+48.30 TO "241CH8" 31+20.20	R+	113.5
C-2	"241CH8" 37+83.00 TO "241CH8" 41+86.40	R+	412.4
C-2	"241CH8" 37+83.65 TO "241CH8" 47+46.22	L+	961.1
C-2	"241NBR1" 1597+72.40 TO "241NBR1" 1599+18.22	R+	143.6
C-2	"241SBR1" 2598+96.97 TO "241SBR1" 2604+63.70	L+	574.9
C-2	"241NBR1" 1603+83.06 TO "241NBR1" 1607+51.20	R+	374.9
C-2	"241CH7" 34+95.69 TO "241CH7" 46+57.82	L+	1149.4
C-2	"241CH7" 35+08.72 TO "241CH7" 39+49.49	R+	443.5
C-2	"241CH7" 610+61.66 TO "241CH7" 614+00.05	L+	350.0
C-2	"241SBR1" 2626+21.53 TO "241SBR1" 2626+59.23	L+	37.7
C-2	"261B241" 2812+63.52 TO "261B241" 2813+50.97	R+	87.5
C-2	"261B241" 2818+08.14 TO "261B241" 2818+91.38	R+	87.7
C-2	"261B241" 2819+24.84 TO "261B241" 2826+49.76	R+	725.0
C-2	"261B241" 2834+91.34 TO "261B241" 2835+28.95	L+	37.6
C-2	"241A3" 652+84.08 TO "241A3" 654+77.17	R+	193.1
C-2	"241A3" 653+74.22 TO "241A3" 665+10.65	L+	137.4
C-2	"241A3" 668+28.39 TO "241A3" 672+39.34	R+	425.0
C-2	"241A3" 668+56.41 TO "241A3" 670+29.86	L+	168.5
C-2	"241A3" 677+53.71 TO "241A3" 693+02.49	R+	1597.6
C-2	"241A3" 686+03.89 TO "241A3" 713+59.37	L+	2756.5
		SUBTOTAL	25426.4

RECONSTRUCT MBGR

SHEET No.	STATION LIMITS	LOCATION	RECONSTRUCT MBGR (NOTCH BLOCK REPLACEMENT) LF
C-2	"241A3" 698+70.74 TO "241A3" 713+47.11	R+	1427.9
C-2	"241A3" 716+77.92 TO "241A3" 734+57.77	R+	1771.0
C-2	"241A3" 716+94.62 TO "241A3" 756+04.30	L+	3896.3
C-2	"241A3" 738+35.34 TO "241A3" 739+07.87	R+	73.9
C-2	"241A3" 742+62.04 TO "241A3" 756+10.46	R+	1363.9
C-2	"241A3" 759+02.16 TO "241NBTOLL1" 772+91.49	R+	1397.8
C-2	"241SBTOLL1" 773+91.66 TO "241SBTOLL1" 776+93.38	L+	299.9
C-2	"241A3" 780+27.88 TO "241A3" 780+65.09	R+	37.6
C-2	"241A3" 782+26.53 TO "241A3" 782+64.25	L+	37.5
C-2	"241A3" 813+03.06 TO "241A3" 815+28.19	L+	225.0
C-2	"241A3" 814+49.31 TO "241A3" 814+91.31	R+	42.5
C-2	"241A3" 817+44.45 TO "241A3" 852+07.15	R+	3429.4
C-2	"241A3" 817+72.25 TO "241A3" 821+16.52	L+	345.0
C-2	"241A3" 824+66.47 TO "241A3" 833+38.25	L+	886.6
C-2	"241A3" 844+08.04 TO "241A3" 851+19.18	L+	711.1
C-2	"241A3" 852+21.96 TO "241A3" 857+07.76	R+	499.0
C-2	"241A3" 863+45.26 TO "241A3" 895+29.21	R+	3186.8
C-2	"241A3" 865+53.79 TO "241A3" 887+61.65	L+	2207.9
C-2	"241A3" 895+35.90 TO "241NW91" 3901+23.52	R+	587.2
C-2	"91WS241" 5900+96.64 TO "91ES241" 4911+44.68	L+	1048.0
C-3	"241NE91" 6909+01.76 TO "241NE91" 6914+50.76	R+	542.8
C-3	"241NW91" 3909+07.89 TO "241NW91" 3918+18.84	L+	910.1
C-3	"91ES241" 4912+32.06 TO "91ES241" 4918+68.56	L+	636.5
C-3	"91ES241" 4919+43.35 TO "91ES241" 4924+01.26	L+	448.9
C-3	"91ES241" 4920+04.35 TO "91ES241" 4933+74.06	R+	1374.2
C-3	"91ES241" 4928+49.47 TO "91ES241" 4930+02.66	L+	150.0
C-3	"91WS241" 5913+90.20 TO "91WS241" 5920+92.58	R+	701.1
C-3	"91WS241" 5919+24.12 TO "91WS241" 5921+20.54	L+	199.4
C-3	"91WS241" 5923+72.74 TO "91WS241" 5930+55.96	R+	682.0
C-3	"91WS241" 5923+99.70 TO "91WS241" 5930+30.00	L+	638.1
C-3	"241NW91" 3923+29.25 TO "241NW91" 3927+79.23	L+	448.8
C-3	"241NW91" 3924+51.72 TO "241NW91" 3930+71.65	R+	630.0
C-3	"241NE91" 6918+27.12 TO "241NE91" 6919+80.92	L+	154.9
		SUBTOTAL	30991.0
		SHEET TOTAL	56417.4
		TOTAL FROM SHEET Q-4	19305.7
		GRAND TOTAL	75723.1

NOTE:

LENGTHS SHOWN ARE BASED ON SURVEY DATA & FIELD MEASUREMENTS. THEY ARE NOT EXACT CALCULATIONS PER STATION LIMITS SHOWN.

SUMMARY OF QUANTITIES

Q-5

H:\pdata\10106739\CADD\TransPW\Div\Merge\8-24-10\c06370pa005.dgn 19-OCT-2010 14:52 s135318

STATE OF CALIFORNIA - DEPARTMENT OF TRANSPORTATION

Caltrans

CONSULTANT FUNCTIONAL SUPERVISOR	CALCULATED-DESIGNED BY	REVISED BY	DATE REVISED
MIKE CHESNEY	LINDSAY KAUFMANN	RK/WT	07/22/10
	CHECKED BY	LINDSAY KAUFMANN	

LAST REVISION 06-08-10 | DATE PLOTTED => 19-OCT-2010 | TIME PLOTTED => 14:52

Dist	COUNTY	ROUTE	POST MILES TOTAL PROJECT	SHEET No.	TOTAL SHEETS
12	Ora	241	15.5/39.0	47	117

Lindsay M. Kaufmann 09/01/10
REGISTERED CIVIL ENGINEER DATE

10-18-10
PLANS APPROVAL DATE

REGISTERED PROFESSIONAL ENGINEER LINDSAY M. KAUFMANN No. C71806 Exp. 12/31/11 CIVIL STATE OF CALIFORNIA

THE STATE OF CALIFORNIA OR ITS OFFICERS OR AGENTS SHALL NOT BE RESPONSIBLE FOR THE ACCURACY OR COMPLETENESS OF SCANNED COPIES OF THIS PLAN SHEET.

RBF CONSULTING
14725 ALTON PKWY
IRVINE, CA. 92618-2027

CONSTRUCT MBGR

SHEET No.	DESCRIPTION	STATION LIMITS	LOCATION	MBGR (STEEL POST)	DOUBLE MBGR (STEEL POST)	SINGLE THRIE BEAM BARRIER	(N) TRANSITION RAILING (TYPE WB) BARRIER CONNECTION TO BRIDGE CURB	TRANSITION RAILING (TYPE STB)	TRANSITION RAILING (TYPE WB)	END CAP (TYPE A)	END ANCHOR ASSEMBLY (TYPE SFT)	AI+ IN-LINE TERMINAL SYSTEM	AI+ FLARED TERMINAL SYSTEM	CRASH CUSHION (TYPE CAT)	CRASH CUSHION (TYPE CAT) BACKUP
				LF	LF	LF	EA	EA	EA	EA	EA	EA	EA	EA	EA
C-4	MBGR LAYOUT 12E	"241A1" 2084+72.43 TO "241A1" 2086+90.81	R+	25.0	125.0				1					1	1
C-4	MBGR LAYOUT 12E	"241A1" 2088+27.10 TO "241A1" 2090+45.50	L+	25.0	125.0				1					1	1
C-4	MBGR LAYOUT 12E	"241A1" 2148+82.74 TO "241A1" 2154+46.42	R+	25.0	450.0				1					1	1
C-4	MBGR LAYOUT 12E	"241A1" 2157+47.21 TO "241A1" 2159+61.08	L+	25.0	112.5				1					1	1
C-4	MBGR LAYOUT 12E	"241A1" 2158+13.27 TO "241A1" 2161+72.17	L+	25.0	262.5				1					1	1
C-4	MBGR LAYOUT 12E	"241A1" 2257+03.28 TO "241A1" 2259+95.54	R+	25.0	200.0				1					1	1
C-4	MBGR LAYOUT 12E	"241A1" 2262+20.79 TO "241A1" 2263+52.48	L+	25.0	37.5				1					1	1
C-4	MBGR LAYOUT 12E	"241A1" 2312+32.10 TO "241A1" 2316+45.33	R+	25.0	287.5				1					1	1
C-4	MBGR LAYOUT 12E	"241A1" 2332+55.18 TO "241A1" 2336+35.10	L+	25.0	287.5				1					1	1
C-4	MBGR LAYOUT 12E	"241A1" 2342+48.59 TO "241A1" 2346+64.65	R+	25.0	325.0				1					1	1
C-4	MBGR LAYOUT 12E	"241A1" 2358+47.34 TO "241A1" 2361+29.74	L+	25.0	187.5				1					1	1
C-4	MBGR LAYOUT 12E	"241A1" 2482+89.67 TO "241A1" 2485+82.10	R+	25.0	200.0				1					1	1
C-4	MBGR LAYOUT 12E	"241A1" 2487+90.61 TO "241A1" 2490+09.95	L+	25.0	125.0				1					1	1
C-4	MBGR LAYOUT 12E	"241A3" 651+23.78 TO "241A3" 655+04.26	R+	25.0	287.5				1					1	1
C-4	MBGR LAYOUT 12E	"241A3" 668+33.51 TO "241A3" 671+16.08	L+	25.0	187.5				1					1	1
C-4	MBGR LAYOUT 12E	"241A3" 710+64.74 TO "241A3" 713+47.83	R+	25.0	187.5				1					1	1
C-4	MBGR LAYOUT 12E	"241A3" 752+11.57 TO "241A3" 756+27.98	R+	25.0	325.0				1					1	1
C-4	MBGR LAYOUT 12E	"241A3" 817+56.55 TO "241A3" 821+37.12	L+	25.0	287.5				1					1	1
C-4	MBGR LAYOUT 12E	"241NW91" 3928+38.39 TO "241NW91" 3930+95.61	L+	25.0	162.5				1					1	1
C-5	TERMINAL SYSTEM UPGRADE	"241A1" 2175+38.63 TO "241A1" 2175+74.57	R+										1		
C-5	TERMINAL SYSTEM UPGRADE	"241A1" 2175+46.11 TO "241A1" 2175+81.35	R+										1		
C-5	TERMINAL SYSTEM UPGRADE	"241A1" 2187+29.55 TO "241A1" 2187+67.79	L+										1		
C-5	TERMINAL SYSTEM UPGRADE	"241A1" 2197+25.29 TO "241A1" 2197+62.46	L+										1		
C-5	TERMINAL SYSTEM UPGRADE	"241A1" 2205+80.86 TO "241A1" 2206+18.32	R+										1		
C-5	TERMINAL SYSTEM UPGRADE	"241A1" 2209+65.05 TO "241A1" 2209+65.87	L+										1		
C-5	TERMINAL SYSTEM UPGRADE	"241A1" 2213+29.91 TO "241A1" 2213+67.35	R+										1		
C-5	TERMINAL SYSTEM UPGRADE	"241A1" 2219+30.33 TO "241A1" 2219+67.61	L+										1		
C-5	TERMINAL SYSTEM UPGRADE	"241A1" 2245+85.08 TO "241A1" 2246+23.76	L+										1		
C-5	TERMINAL SYSTEM UPGRADE	"241A1" 2280+30.83 TO "241A1" 2280+68.84	R+										1		
C-5	TERMINAL SYSTEM UPGRADE	"241A1" 2296+71.85 TO "241A1" 2297+09.03	R+										1		
C-5	TERMINAL SYSTEM UPGRADE	"241A1" 2301+73.97 TO "241A1" 2302+10.37	L+										1		
C-5	TERMINAL SYSTEM UPGRADE	"241A1" 2361+29.58 TO "241A1" 2361+66.74	L+										1		
C-5	TERMINAL SYSTEM UPGRADE	"241A1" 2372+49.54 TO "241A1" 2372+86.77	R+										1		
C-5	TERMINAL SYSTEM UPGRADE	"241A1" 2391+37.76 TO "241A1" 2391+74.73	R+										1		
C-5	TERMINAL SYSTEM UPGRADE	"241A1" 2397+13.20 TO "241A1" 2397+50.67	L+										1		
C-5	TERMINAL SYSTEM UPGRADE	"241A1" 2410+64.44 TO "241A1" 2411+01.67	L+										1		
C-5	TERMINAL SYSTEM UPGRADE	"241A1" 2414+47.61 TO "241A1" 2414+84.90	R+										1		
C-5	TERMINAL SYSTEM UPGRADE	"241A1" 2419+02.08 TO "241A1" 2419+39.60	R+										1		
C-5	TERMINAL SYSTEM UPGRADE	"241A1" 2428+97.85 TO "241A1" 2429+37.48	L+										1		
C-5	TERMINAL SYSTEM UPGRADE	"241A1" 2452+19.75 TO "241A1" 2452+55.99	L+										1		
C-5	TERMINAL SYSTEM UPGRADE	"241A1" 2468+38.86 TO "241A1" 2468+74.76	L+										1		
C-5	TERMINAL SYSTEM UPGRADE	"241A1" 2476+71.43 TO "241A1" 2476+96.34	L+										1		
C-5	TERMINAL SYSTEM UPGRADE	"241A1" 2479+54.41 TO "241A1" 2479+77.17	R+										1		
C-5	TERMINAL SYSTEM UPGRADE	"241A1" 2481+98.55 TO "241A1" 2482+35.93	L+										1		
C-5	TERMINAL SYSTEM UPGRADE	"241A1" 2484+86.52 TO "241A1" 2485+23.14	R+										1		
C-5	TERMINAL SYSTEM UPGRADE	"241A1" 2484+92.26 TO "241A1" 2485+28.95	R+										1		
			SUBTOTAL	475.0	4162.5				19				27	19	19

(N) = NOT A SEPARATE PAY ITEM, FOR INFORMATION ONLY.

NOTE:

LENGTHS SHOWN ARE BASED ON SURVEY DATA & FIELD MEASUREMENTS. THEY ARE NOT EXACT CALCULATIONS PER STATION LIMITS SHOWN.

SUMMARY OF QUANTITIES

H:\pdata\10106739\CADD\TransPW\Div\Merge\8-24-10\c0G370pa006.dgn s135318 19-OCT-2010 14:52
STATE OF CALIFORNIA - DEPARTMENT OF TRANSPORTATION
Caltrans
CONSULTANT FUNCTIONAL SUPERVISOR: MIKE CHESNEY
CALCULATED-DESIGNED BY: LINDSAY KAUFMANN
CHECKED BY: LINDSAY KAUFMANN
REVISED BY: RK/WT
DATE REVISED: 07/22/10
LAST REVISION DATE PLOTTED => 19-OCT-2010
06-08-10 TIME PLOTTED => 14:52
BORDER LAST REVISED 7/2/2010
USERNAME => s135318
DGN FILE => c0G370pa006.dgn
RELATIVE BORDER SCALE IS IN INCHES 0 1 2 3
UNIT 2998
PROJECT NUMBER & PHASE 12000001431

Dist	COUNTY	ROUTE	POST MILES TOTAL PROJECT	SHEET No.	TOTAL SHEETS
12	Ora	241	15.5/39.0	48	117

Lindsay M. Kaufmann 09/01/10
REGISTERED CIVIL ENGINEER DATE

10-18-10
PLANS APPROVAL DATE

REGISTERED PROFESSIONAL ENGINEER LINDSAY M. KAUFMANN No. C71806 Exp.12/31/11 CIVIL STATE OF CALIFORNIA

THE STATE OF CALIFORNIA OR ITS OFFICERS OR AGENTS SHALL NOT BE RESPONSIBLE FOR THE ACCURACY OR COMPLETENESS OF SCANNED COPIES OF THIS PLAN SHEET.

RBF CONSULTING
14725 ALTON PKWY
IRVINE, CA. 92618-2027

CONSTRUCT MBGR

SHEET No.	DESCRIPTION	STATION LIMITS	LOCATION	MBGR (STEEL POST)	DOUBLE MBGR (STEEL POST)	SINGLE THRIE BEAM BARRIER	(N) TRANSITION RAILING (TYPE WB) BARRIER CONNECTION TO BRIDGE CURB	TRANSITION RAILING (TYPE STB)	TRANSITION RAILING (TYPE WB)	END CAP (TYPE A)	END ANCHOR ASSEMBLY (TYPE SFT)	At+ IN-LINE TERMINAL SYSTEM	At+ FLARED TERMINAL SYSTEM	CRASH CUSHION (TYPE CAT)	CRASH CUSHION (TYPE CAT) BACKUP
				LF	LF	LF	EA	EA	EA	EA	EA	EA	EA	EA	EA
C-5	TERMINAL SYSTEM UPGRADE	"241A1" 2485+13.94 TO "241A1" 2485+49.27	R+										1		
C-5	TERMINAL SYSTEM UPGRADE	"241A1" 2529+40.82 TO "241A1" 2529+78.11	L+										1		
C-5	TERMINAL SYSTEM UPGRADE	"241A1" 2538+16.24 TO "241A1" 2538+53.28	L+										1		
C-5	TERMINAL SYSTEM UPGRADE	"241A1" 2541+78.68 TO "241A1" 2542+16.15	R+										1		
C-5	TERMINAL SYSTEM UPGRADE	"241A1" 2553+14.81 TO "241A1" 2553+50.72	L+										1		
C-5	TERMINAL SYSTEM UPGRADE	"241SB1" 280+51.47 TO "241SB1" 280+89.01	L+										1		
C-5	TERMINAL SYSTEM UPGRADE	"241CH8" 31+04.02 TO "241CH8" 31+41.35	L+										1		
C-5	TERMINAL SYSTEM UPGRADE	"241A3" 758+87.39 TO "241A3" 759+25.27	L+										1		
C-7	TRANSITION RAILING (TYPE WB)	"241A1" 2086+67.91 TO "241A1" 2086+92.91	R+						1						
C-7	TRANSITION RAILING (TYPE WB)	"241A1" 2088+25.40 TO "241A1" 2088+50.40	L+						1						
C-7	TRANSITION RAILING (TYPE WB)	"241A1" 2154+68.61 TO "241A1" 2154+93.01	R+						1						
C-7	TRANSITION RAILING (TYPE WB)	"241A1" 2157+18.94 TO "241A1" 2157+45.43	L+						1						
C-7	TRANSITION RAILING (TYPE WB)	"241A1" 2227+12.48 TO "241A1" 2227+37.48	R+						1						
C-7	TRANSITION RAILING (TYPE WB)	"241A1" 2241+93.14 TO "241A1" 2242+17.18	L+						1						
C-7	TRANSITION RAILING (TYPE WB)	"241A1" 2242+05.61 TO "241A1" 2242+31.48	L+						1						
C-7	TRANSITION RAILING (TYPE WB)	"241A1" 2259+77.92 TO "241A1" 2260+02.01	R+						1						
C-7	TRANSITION RAILING (TYPE WB)	"241A1" 2262+29.52 TO "241A1" 2262+55.40	L+						1						
C-7	TRANSITION RAILING (TYPE WB)	"241A1" 2316+17.58 TO "241A1" 2316+43.12	R+						1						
C-7	TRANSITION RAILING (TYPE WB)	"241A1" 2346+12.29 TO "241A1" 2346+36.79	R+						1						
C-7	TRANSITION RAILING (TYPE WB)	"241A1" 2358+74.89 TO "241A1" 2359+00.34	L+						1						
C-7	TRANSITION RAILING (TYPE WB)	"241A1" 2392+81.83 TO "241A1" 2393+06.80	R+						1						
C-7	TRANSITION RAILING (TYPE WB)	"241A1" 2396+88.20 TO "241A1" 2397+01.35	L+						1						
C-7	TRANSITION RAILING (TYPE WB)	"241A1" 2419+45.57 TO "241A1" 2419+64.59	R+						1						
C-7	TRANSITION RAILING (TYPE WB)	"241A1" 2422+26.42 TO "241A1" 2422+51.42	L+						1						
C-7	TRANSITION RAILING (TYPE WB)	"241A1" 2426+46.61 TO "241A1" 2426+71.46	R+						1						
C-7	TRANSITION RAILING (TYPE WB)	"241A1" 2428+72.86 TO "241A1" 2428+97.86	L+						1						
C-7	TRANSITION RAILING (TYPE WB)	"241A1" 2443+08.20 TO "241A1" 2443+33.20	R+						1						
C-7	TRANSITION RAILING (TYPE WB)	"241A1" 2446+66.24 TO "241A1" 2446+91.24	L+						1						
C-7	TRANSITION RAILING (TYPE WB)	"241A1" 2485+53.42 TO "241A1" 2485+77.80	R+						1						
C-7	TRANSITION RAILING (TYPE WB)	"241A1" 2485+55.17 TO "241A1" 2485+79.37	R+						1						
C-7	TRANSITION RAILING (TYPE WB)	"241A1" 2485+59.21 TO "241A1" 2485+83.77	R+						1						
C-7	TRANSITION RAILING (TYPE WB)	"241A1" 2487+99.97 TO "241A1" 2488+25.65	L+						1						
C-7	TRANSITION RAILING (TYPE WB)	"241SB1" 280+26.50 TO "241SB1" 280+51.47	L+						1						
C-7	TRANSITION RAILING (TYPE WB)	"241WS133" 93+70.21 TO "241WS133" 93+95.20	L+						1						
C-7	TRANSITION RAILING (TYPE WB)	"241WS133" 110+16.44 TO "241WS133" 110+40.54	R+						1						
C-7	TRANSITION RAILING (TYPE WB)	"241B1" 393+98.79 TO "241B1" 394+23.78	R+						1						
C-7	TRANSITION RAILING (TYPE WB)	"241B1" 396+14.28 TO "241B1" 396+39.43	L+						1						
C-7	TRANSITION RAILING (TYPE WB)	"241CH8" 31+20.20 TO "241CH8" 31+45.20	R+						1						
C-7	TRANSITION RAILING (TYPE WB)	"241CH8" 31+41.35 TO "241CH8" 31+66.34	L+						1						
C-7	TRANSITION RAILING (TYPE WB)	"241A3" 654+77.17 TO "241A3" 655+02.17	R+						1						
C-7	TRANSITION RAILING (TYPE WB)	"241A3" 668+31.42 TO "241A3" 668+56.41	L+						1						
C-7	TRANSITION RAILING (TYPE WB)	"241A3" 713+14.11 TO "241A3" 713+39.62	R+						1						
C-7	TRANSITION RAILING (TYPE WB)	"241A3" 716+70.06 TO "241A3" 716+94.62	L+						1						
C-7	TRANSITION RAILING (TYPE WB)	"241A3" 756+10.46 TO "241A3" 756+35.15	R+						1						
			SUBTOTAL						36				8		

(N) = NOT A SEPARATE PAY ITEM, FOR INFORMATION ONLY.

NOTE:

LENGTHS SHOWN ARE BASED ON SURVEY DATA & FIELD MEASUREMENTS. THEY ARE NOT EXACT CALCULATIONS PER STATION LIMITS SHOWN.

SUMMARY OF QUANTITIES

REVISED BY	DATE REVISED
RK/WT	07/22/10

LINDSAY KAUFMANN 19-OCT-2010 14:52
LINDSAY KAUFMANN
CALCULATED-DESIGNED BY
CHECKED BY
CONSULTANT FUNCTIONAL SUPERVISOR
MIKE CHESNEY

STATE OF CALIFORNIA - DEPARTMENT OF TRANSPORTATION
Caltrans

s135318
H:\pdata\10106739\CADD\TransPW\Div\Merge\8-24-10\c0G370pa007.dgn

LAST REVISION 06-08-10 | DATE PLOTTED => 19-OCT-2010 | TIME PLOTTED => 14:52

Dist	COUNTY	ROUTE	POST MILES TOTAL PROJECT	SHEET No.	TOTAL SHEETS
12	Ora	241	15.5/39.0	49	117

Lindsay M. Kaufmann 09/01/10
REGISTERED CIVIL ENGINEER DATE

10-18-10
PLANS APPROVAL DATE

REGISTERED PROFESSIONAL ENGINEER LINDSAY M. KAUFMANN No. C71806 Exp.12/31/11 CIVIL STATE OF CALIFORNIA

THE STATE OF CALIFORNIA OR ITS OFFICERS OR AGENTS SHALL NOT BE RESPONSIBLE FOR THE ACCURACY OR COMPLETENESS OF SCANNED COPIES OF THIS PLAN SHEET.

RBF CONSULTING
14725 ALTON PKWY
IRVINE, CA. 92618-2027

CONSTRUCT MBGR

SHEET No.	DESCRIPTION	STATION LIMITS	LOCATION	MBGR (STEEL POST)	DOUBLE MBGR (STEEL POST)	SINGLE THRIE BEAM BARRIER	(N) TRANSITION RAILING (TYPE WB) BARRIER CONNECTION TO BRIDGE CURB	TRANSITION RAILING (TYPE STB)	TRANSITION RAILING (TYPE WB)	END CAP (TYPE A)	END ANCHOR ASSEMBLY (TYPE SFT)	AI+ IN-LINE TERMINAL SYSTEM	AI+ FLARED TERMINAL SYSTEM	CRASH CUSHION (TYPE CAT)	CRASH CUSHION (TYPE CAT) BACKUP
				LF	LF	LF	EA	EA	EA	EA	EA	EA	EA	EA	EA
C-7	TRANSITION RAILING (TYPE WB)	"241A3" 758+62.14 TO "241A3" 758+87.38	L+						1						
C-7	TRANSITION RAILING (TYPE WB)	"241A3" 814+91.31 TO "241A3" 815+16.28	R+						1						
C-7	TRANSITION RAILING (TYPE WB)	"241A3" 817+47.25 TO "241A3" 817+72.25	L+						1						
C-7	TRANSITION RAILING (TYPE WB)	"91WS241" 5923+47.70 TO "91WS241" 5923+72.74	R+						1						
C-7	TRANSITION RAILING (TYPE WB)	"91WS241" 5923+75.08 TO "91WS241" 5923+99.71	L+						1						
C-7	TRANSITION RAILING (TYPE WB)	"241NW91" 3930+71.65 TO "241NW91" 3930+96.26	R+						1						
C-7	TRANSITION RAILING (TYPE WB)	"241NE91" 6930+72.96 TO "241NE91" 6930+98.25	R+						1						
C-11	LOCATION 2	"241A1" 2111+30.24 TO "241A1" 2118+70.45	L+	712.5									1		
C-12	LOCATION 3	"241A1" 2157+83.23 TO "241A1" 2159+55.60	L+	25.0	75.0				1					1	1
C-12	LOCATION 4	"241A1" 2169+07.21 TO "241A1" 2170+17.01	R+	62.5							1	1			
C-12	LOCATION 5	"241A1" 2184+68.42 TO "241A1" 2185+51.93	R+	50.0							1		1		
C-13	LOCATION 6	"241A1" 2212+06.32 TO "241A1" 2212+93.82	R+	50.0							1		1		
C-13	LOCATION 7	"241A1" 2213+20.54 TO "241A1" 2213+70.75	R+	12.5									1		
C-13	LOCATION 8	"241A1" 2218+85.21 TO "241A1" 2219+85.21	R+	50.0							1	1			
C-13	LOCATION 9	"241A1" 2223+22.33 TO "241A1" 2225+22.35	R+	162.5							1		1		
C-13	LOCATION 10	"241A1" 2253+66.85 TO "241A1" 2255+10.67	R+	150.0							1				
C-14	LOCATION 11	"241A1" 2262+82.49 TO "241A1" 2263+34.39	L+										1		
C-14	LOCATION 12	"241A1" 2267+37.97 TO "241A1" 2268+25.46	R+	50.0							1		1		
C-14	LOCATION 13	"241A1" 2292+15.31 TO "241A1" 2293+02.83	L+	50.0							1		1		
C-14	LOCATION 13	"241A1" 2292+19.42 TO "241A1" 2293+06.92	L+	50.0							1		1		
C-14	LOCATION 14	"241A1" 2299+96.23 TO "241A1" 2300+08.57	R+	12.5							1				
C-15	LOCATION 15	"241A1" 2304+01.23 TO "241A1" 2304+13.56	L+	12.5							1				
C-15	LOCATION 15	"241A1" 2305+25.49 TO "241A1" 2310+50.29	L+	487.5									1		
C-15	LOCATION 16	"241A1" 2312+42.48 TO "241A1" 2312+55.34	R+	12.5							1				
C-15	LOCATION 17	"241A1" 2332+59.81 TO "241A1" 2336+96.32	L+	362.5					1			1			
C-16	LOCATION 18	"241A1" 2345+72.16 TO "241A1" 2346+23.07	L+									1			
C-16	LOCATION 19	"241A1" 2377+70.92 TO "241A1" 2378+58.43	R+	50.0							1		1		
C-16	LOCATION 20	"241A1" 2377+97.17 TO "241A1" 2378+84.47	L+	50.0							1		1		
C-16	LOCATION 21	"241A1" 2389+46.00 TO "241A1" 2391+70.09	R+	225.0											
C-17	LOCATION 22	"241A1" 2383+84.96 TO "241A1" 2392+34.96	L+	850.0						1	1				
C-18	LOCATION 23	"241A1" 2403+36.51 TO "241A1" 2404+23.55	R+	50.0							1		1		
C-18	LOCATION 24	"241A1" 2435+94.66 TO "241A1" 2436+80.63	R+	50.0							1		1		
C-18	LOCATION 25	"241A1" 2434+80.21 TO "241A1" 2442+52.61	L+	775.0							1				
C-18	LOCATION 26	"241A1" 2457+09.36 TO "241A1" 2458+12.02	R+	62.5							1		1		
C-19	LOCATION 27	"241A1" 2465+94.67 TO "241A1" 2467+22.81	L+	93.5							1		1		
C-19	LOCATION 27	"241A1" 2465+98.23 TO "241A1" 2467+19.65	L+	87.5							1		1		
C-19	LOCATION 28	"241A1" 2473+42.40 TO "241A1" 2474+99.99	R+	150.0											
C-19	LOCATION 29	"241A1" 2474+54.16 TO "241A1" 2476+24.50	R+	112.5			1		1				1		
C-19	LOCATION 30	"241A1" 2479+47.96 TO "241A1" 2480+35.55	L+	50.0							1		1		
C-19	LOCATION 31	"241A1" 2480+20.57 TO "241A1" 2482+40.88	L+	162.5			1		1				1		
C-19	LOCATION 32	"241A1" 2487+92.46 TO "241A1" 2490+17.16	L+	112.5	25.0				1					1	1
C-19	LOCATION 32	"241A1" 2488+00.17 TO "241A1" 2489+58.54	L+	106.4					1						
C-20	LOCATION 33	"241A1" 2489+96.93 TO "241A1" 2504+97.96	L+	1437.5									1		
			SUBTOTAL	6737.4	100.0		2		13	1	22	4	21	2	2

(N) = NOT A SEPARATE PAY ITEM, FOR INFORMATION ONLY.

NOTE:

LENGTHS SHOWN ARE BASED ON SURVEY DATA & FIELD MEASUREMENTS. THEY ARE NOT EXACT CALCULATIONS PER STATION LIMITS SHOWN.

SUMMARY OF QUANTITIES

RK/WT 07/22/10 REVISED BY DATE REVISED
LINDSAY KAUFMANN LINDSAY KAUFMANN CALCULATED-DESIGNED BY CHECKED BY
MIKE CHESNEY CONSULTANT FUNCTIONAL SUPERVISOR
STATE OF CALIFORNIA - DEPARTMENT OF TRANSPORTATION
Caltrans
H:\pdata\10106739\CADD\TransPW\Div\Merge\8-24-10\c0G370pa008.dgn s135318 19-OCT-2010 14:52
LAST REVISION 06-08-10 DATE PLOTTED => 19-OCT-2010 TIME PLOTTED => 14:52
BORDER LAST REVISED 7/2/2010
USERNAME => s135318
DGN FILE => c0G370pa008.dgn
RELATIVE BORDER SCALE IS IN INCHES 0 1 2 3
UNIT 2998
PROJECT NUMBER & PHASE 12000001431

Dist	COUNTY	ROUTE	POST MILES TOTAL PROJECT	SHEET No.	TOTAL SHEETS
12	Ora	241	15.5/39.0	50	117

Lindsay M. Kaufmann 09/01/10
REGISTERED CIVIL ENGINEER DATE

10-18-10
PLANS APPROVAL DATE

REGISTERED PROFESSIONAL ENGINEER LINDSAY M. KAUFMANN No. C71806 Exp.12/31/11 CIVIL STATE OF CALIFORNIA

THE STATE OF CALIFORNIA OR ITS OFFICERS OR AGENTS SHALL NOT BE RESPONSIBLE FOR THE ACCURACY OR COMPLETENESS OF SCANNED COPIES OF THIS PLAN SHEET.

RBF CONSULTING
14725 ALTON PKWY
IRVINE, CA. 92618-2027

CONSTRUCT MBGR

SHEET No.	DESCRIPTION	STATION LIMITS	LOCATION	MBGR (STEEL POST)	DOUBLE MBGR (STEEL POST)	SINGLE THRIE BEAM BARRIER	(N) TRANSITION RAILING (TYPE WB) BARRIER CONNECTION TO BRIDGE CURB	TRANSITION RAILING (TYPE STB)	TRANSITION RAILING (TYPE WB)	END CAP (TYPE A)	END ANCHOR ASSEMBLY (TYPE SFT)	Alt IN-LINE TERMINAL SYSTEM	Alt FLARED TERMINAL SYSTEM	CRASH CUSHION (TYPE CAT)	CRASH CUSHION (TYPE CAT) BACKUP
				LF	LF	LF	EA	EA	EA	EA	EA	EA	EA	EA	EA
C-21	LOCATION 34	"241A1" 2503+99.16 TO "241A1" 2505+61.12	R+	125.0							1		1		
C-21	LOCATION 35	"241A1" 2509+49.39 TO "241A1" 2509+86.89	R+										1		
C-21	LOCATION 36	"241A1" 2511+26.86 TO "241A1" 2511+64.77	L+										1		
C-21	LOCATION 37	"241A1" 2516+58.05 TO "241A1" 2517+58.05	R+	62.5							1		1		
C-21	LOCATION 37	"241A1" 2521+30.10 TO "241A1" 2522+30.10	R+	62.5							1		1		
C-21	LOCATION 38	"241A1" 2523+90.80 TO "241A1" 2527+90.91	L+	400.0											
C-21	LOCATION 39	"241A1" 2527+00.71 TO "241A1" 2528+00.71	R+	62.5							1		1		
C-22	LOCATION 40	"241A1" 2536+57.08 TO "241A1" 2537+07.08	R+									1			
C-22	LOCATION 41	"241A1" 2549+40.80 TO "241A1" 2550+28.30	L+	50.0							1		1		
C-22	LOCATION 42	"241NP2" 2569+37.43 TO "241NP2" 2571+49.51	L+	162.5					1				1		
C-23	LOCATION 43	"241A1" 2574+76.18 TO "241A1" 2590+88.43	R+	1575.0							1		1		
C-24	LOCATION 44	"241A1" 2596+82.40 TO "241A1" 2597+07.40	R+	25.0							1				
C-24	LOCATION 45	"241NBTOLL2" 2611+21.51 TO "241NBTOLL2" 2612+08.79	R+	50.0							1		1		
C-24	LOCATION 46	"241A1" 2613+38.88 TO "241A1" 2316+76.38	L+	37.5							1				
C-24	LOCATION 47	"241SB1" 273+30.43 TO "241SB1" 274+04.80	L+	37.5									1		
C-25	LOCATION 48	"241WS133" 95+37.99 TO "241WS133" 96+81.89	R+			125.0		1							
C-25	LOCATION 49	"241NB1" 298+15.74 TO "241NB1" 299+02.99	R+	87.5							1				
C-25	LOCATION 50	"241S133" 67+59.75 TO "241S133" 69+08.51	R+			150.0					1				
C-25	LOCATION 50	"241SB1" 320+18.16 TO "241SB1" 328+38.77	L+	775.0							1			1	1
C-25	LOCATION 51	"241B1" 363+60.77 TO "241B1" 364+48.29	R+	50.0							1		1		
C-26	LOCATION 52	"241B1" 381+65.58 TO "241B1" 382+90.58	R+	75.0							1	1			
C-26	LOCATION 53	"241B1" 397+12.73 TO "241B1" 398+23.70	R+	75.0							1		1		
C-26	LOCATION 54	"241B1" 409+91.74 TO "241B1" 410+89.86	R+	100.0							1				
C-26	LOCATION 55	"241B1" 447+70.73 TO "241B1" 448+58.23	R+	87.5							1				
C-27	LOCATION 56	"241B1" 464+94.05 TO "241B1" 465+70.96	R+	37.5							1		1		
C-27	LOCATION 57	"241A2" 539+45.82 TO "241A2" 540+20.84	R+	37.5							1		1		
C-27	LOCATION 58	"241NBR1" 1582+73.81 TO "241NBR1" 1584+64.31	R+	150.0							1		1		
C-28	LOCATION 60	"241CH7" 34+96.29 TO "241CH7" 35+08.72	R+	12.5							1				
C-28	LOCATION 61	"241A3" 716+79.63 TO "241A3" 720+98.54	L+	87.5	262.5				1					1	1
C-28	LOCATION 62	"241SBTOLL1" 776+93.39 TO "241SBTOLL1" 777+30.97	L+										1		
C-28	LOCATION 63	"241A3" 782+39.23 TO "241A3" 783+13.44	R+	37.5							1		1		
C-29	LOCATION 64	"241NBTOLL1" 795+12.49 TO "241NBTOLL1" 796+11.74	R+	50.0							1	1			
C-29	LOCATION 65	"241NBTOLL1" 800+11.32 TO "241NBTOLL1" 801+61.34	R+	112.5							1		1		
C-29	LOCATION 66	"241SBTOLL1" 803+49.70 TO "241A3" 804+89.88	L+	50.0							1	1			
C-29	LOCATION 67	"91ES241" 4918+68.56 TO "91ES241" 4919+18.56	L+									1			
C-30	LOCATION 68	"91ES241" 4924+95.00 TO "91ES241" 4926+36.05	L+	100.0							1		1		
C-30	LOCATION 69	"241NE91" 6928+86.41 TO "241NE91" 6930+85.02	L+			175.0		1							
			SUBTOTAL	4575.0	262.5	450.0		2	2		26	5	20	2	2
			TOTAL FROM SHEET Q-6	475.0	4162.5				19				27	19	19
			TOTAL FROM SHEET Q-7						36				8		
			TOTAL FROM SHEET Q-8	6737.4	100.0		2		13	1	22	4	21	2	2
			GRAND TOTAL	11787.4	4525.0	450.0	2	2	70	1	48	9	76	23	23

(N) = NOT A SEPARATE PAY ITEM, FOR INFORMATION ONLY.

NOTE:

LENGTHS SHOWN ARE BASED ON SURVEY DATA & FIELD MEASUREMENTS. THEY ARE NOT EXACT CALCULATIONS PER STATION LIMITS SHOWN.

SUMMARY OF QUANTITIES

H:\pdata\10106739\CADD\TransPW\Div\Merge\8-24-10\c06370pa009.dgn s135318 19-OCT-2010 14:52
STATE OF CALIFORNIA - DEPARTMENT OF TRANSPORTATION
Caltrans
CONSULTANT FUNCTIONAL SUPERVISOR: MIKE CHESNEY
CALCULATED-DESIGNED BY: LINDSAY KAUFMANN
CHECKED BY: LINDSAY KAUFMANN
REVISED BY: RK/WT
DATE REVISED: 07/22/10
LAST REVISION 06-08-10 | DATE PLOTTED => 19-OCT-2010 | TIME PLOTTED => 14:52
BORDER LAST REVISED 7/2/2010
USERNAME => s135318
DGN FILE => c06370pa009.dgn
RELATIVE BORDER SCALE IS IN INCHES 0 1 2 3
UNIT 2998
PROJECT NUMBER & PHASE 12000001431

Dist	COUNTY	ROUTE	POST MILES TOTAL PROJECT	SHEET No.	TOTAL SHEETS
12	Ora	241	15.5/39.0	51	117

Lindsay M. Kaufmann 09/01/10
REGISTERED CIVIL ENGINEER DATE

10-18-10
PLANS APPROVAL DATE

REGISTERED PROFESSIONAL ENGINEER LINDSAY M. KAUFMANN No. C71806 Exp. 12/31/11 CIVIL STATE OF CALIFORNIA

THE STATE OF CALIFORNIA OR ITS OFFICERS OR AGENTS SHALL NOT BE RESPONSIBLE FOR THE ACCURACY OR COMPLETENESS OF SCANNED COPIES OF THIS PLAN SHEET.

RBF CONSULTING
14725 ALTON PKWY
IRVINE, CA. 92618-2027

NOTE:

LENGTHS SHOWN ARE BASED ON SURVEY DATA & FIELD MEASUREMENTS. THEY ARE NOT EXACT CALCULATIONS PER STATION LIMITS SHOWN.

REMOVE DIKE

SHEET No.	DESCRIPTION	STATION LIMITS	LOCATION	REMOVE AC DIKE LF
C-4	MBGR LAYOUT 12E	"241A1" 2154+27.89 TO "241A1" 5154+51.15	R+	21.8
C-4	MBGR LAYOUT 12E	"241A1" 2485+57.27 TO "241A1" 2485+54.17	R+	32.9
C-4	MBGR LAYOUT 12E	"241NW91" 3928+08.40 TO "241NW91" 3930+79.30	L+	270.3
C-4	MBGR LAYOUT 12E	"241NW91" 3930+92.69 TO "241NW91" 3931+00.24	L+	7.5
C-5	TERMINAL SYSTEM UPGRADE	"241A1" 2197+25.29 TO "241A1" 2197+92.46	L+	67.5
C-5	TERMINAL SYSTEM UPGRADE	"241A1" 2245+85.08 TO "241A1" 2246+54.80	L+	67.5
C-5	TERMINAL SYSTEM UPGRADE	"241A1" 2414+17.60 TO "241A1" 2414+84.90	R+	67.5
C-5	TERMINAL SYSTEM UPGRADE	"241A1" 2452+19.75 TO "241A1" 2452+85.27	L+	67.5
C-5	TERMINAL SYSTEM UPGRADE	"241A1" 2468+38.86 TO "241A1" 2469+03.61	L+	67.5
C-5	TERMINAL SYSTEM UPGRADE	"241A1" 2476+71.63 TO "241A1" 2477+00.10	L+	39.2
C-5	TERMINAL SYSTEM UPGRADE	"241A1" 2479+77.38 TO "241A1" 2479+51.11	R+	37.7
C-9	HMA DIKE REPLACEMENT	"241A1" 2052+12.17 TO "241A1" 2068+05.55	R+	1579.9
C-9	HMA DIKE REPLACEMENT	"241A1" 2064+87.30 TO "241A1" 2065+29.55	L+	42.3
C-9	HMA DIKE REPLACEMENT	"241A1" 2077+45.48 TO "241A1" 2086+97.87	L+	952.6
C-9	HMA DIKE REPLACEMENT	"241A1" 2086+49.16 TO "241A1" 2086+97.80	R+	48.7
C-9	HMA DIKE REPLACEMENT	"241A1" 2088+20.27 TO "241A1" 2088+56.95	L+	36.8
C-9	HMA DIKE REPLACEMENT	"241A1" 2095+90.51 TO "241A1" 2101+99.85	R+	601.4
C-9	HMA DIKE REPLACEMENT	"241A1" 2106+37.71 TO "241A1" 2109+27.64	R+	286.2
C-9	HMA DIKE REPLACEMENT	"241A1" 2114+70.33 TO "241A1" 2115+13.35	R+	42.5
C-9	HMA DIKE REPLACEMENT	"241A1" 2125+80.85 TO "241A1" 2126+25.17	R+	44.3
C-9	HMA DIKE REPLACEMENT	"241A1" 2128+95.09 TO "241A1" 2131+79.80	L+	285.0
C-9	HMA DIKE REPLACEMENT	"241A1" 2137+20.18 TO "241A1" 2138+87.56	L+	167.4
C-9	HMA DIKE REPLACEMENT	"241A1" 2142+79.24 TO "241A1" 2143+09.24	R+	30.0
C-9	HMA DIKE REPLACEMENT	"241A1" 2146+60.07 TO "241A1" 2148+49.77	R+	194.1
C-9	HMA DIKE REPLACEMENT	"241A1" 2147+77.81 TO "241A1" 2152+74.68	L+	483.8
C-9	HMA DIKE REPLACEMENT	"241A1" 2154+01.78 TO "241A1" 2154+97.90	R+	98.5
C-9	HMA DIKE REPLACEMENT	"241A1" 2157+13.63 TO "241A1" 2157+49.46	L+	34.6
C-9	HMA DIKE REPLACEMENT	"241A1" 2158+08.87 TO "241A1" 2158+40.13	L+	30.0
C-9	HMA DIKE REPLACEMENT	"241A1" 2159+48.86 TO "241A1" 2163+39.10	R+	414.9
C-9	HMA DIKE REPLACEMENT	"241A1" 2176+76.86 TO "241A1" 2178+15.10	L+	135.0
C-9	HMA DIKE REPLACEMENT	"241A1" 2186+85.89 TO "241A1" 2187+29.55	L+	42.5
C-9	HMA DIKE REPLACEMENT	"241A1" 2192+26.36 TO "241A1" 2192+31.36	R+	5.0
C-9	HMA DIKE REPLACEMENT	"241A1" 2196+82.69 TO "241A1" 2197+25.29	L+	42.6
C-9	HMA DIKE REPLACEMENT	"241A1" 2206+18.32 TO "241A1" 2206+60.70	R+	42.5
C-9	HMA DIKE REPLACEMENT	"241A1" 2209+65.04 TO "241A1" 2209+69.68	L+	31.0
C-9	HMA DIKE REPLACEMENT	"241A1" 2213+67.35 TO "241A1" 2214+09.55	R+	42.3
C-9	HMA DIKE REPLACEMENT	"241A1" 2218+87.86 TO "241A1" 2219+30.34	L+	42.5
C-9	HMA DIKE REPLACEMENT	"241A1" 2242+00.29 TO "241A1" 2246+32.49	L+	417.4
C-9	HMA DIKE REPLACEMENT	"241A1" 2280+68.84 TO "241A1" 2281+11.90	R+	42.2
C-9	HMA DIKE REPLACEMENT	"241A1" 2345+28.86 TO "241A1" 2345+72.16	L+	42.5
C-9	HMA DIKE REPLACEMENT	"241A1" 2358+69.67 TO "241A1" 2361+29.58	L+	256.0
C-9	HMA DIKE REPLACEMENT	"241A1" 2372+86.77 TO "241A1" 2373+18.48	R+	31.7
			SUBTOTAL	7293.1

REMOVE DIKE

SHEET No.	DESCRIPTION	STATION LIMITS	LOCATION	REMOVE AC DIKE LF
C-9	HMA DIKE REPLACEMENT	"241A1" 2391+70.90 TO "241A1" 2392+02.16	R+	31.3
C-9	HMA DIKE REPLACEMENT	"241A1" 2391+74.34 TO "241A1" 2392+05.49	R+	30.8
C-9	HMA DIKE REPLACEMENT	"241A1" 2392+88.06 TO "241A1" 2393+11.60	R+	23.6
C-9	HMA DIKE REPLACEMENT	"241A1" 2396+83.07 TO "241A1" 2397+80.67	L+	97.6
C-9	HMA DIKE REPLACEMENT	"241A1" 2409+97.18 TO "241A1" 2410+64.44	L+	67.3
C-9	HMA DIKE REPLACEMENT	"241A1" 2414+17.61 TO "241A1" 2417+28.37	R+	311.0
C-9	HMA DIKE REPLACEMENT	"241A1" 2419+45.86 TO "241A1" 2419+69.26	R+	23.4
C-9	HMA DIKE REPLACEMENT	"241A1" 2422+21.29 TO "241A1" 2426+44.14	L+	422.9
C-9	HMA DIKE REPLACEMENT	"241A1" 2426+53.25 TO "241A1" 2426+75.99	R+	22.8
C-10	HMA DIKE REPLACEMENT	"241A1" 2428+67.73 TO "241A1" 2429+00.08	L+	32.4
C-10	HMA DIKE REPLACEMENT	"241A1" 2441+76.27 TO "241A1" 2443+37.71	R+	161.5
C-10	HMA DIKE REPLACEMENT	"241A1" 2442+52.61 TO "241A1" 2444+26.15	L+	173.5
C-10	HMA DIKE REPLACEMENT	"241A1" 2446+61.11 TO "241A1" 2452+85.35	L+	634.7
C-10	HMA DIKE REPLACEMENT	"241A1" 2475+33.34 TO "241A1" 2476+71.64	L+	144.5
C-10	HMA DIKE REPLACEMENT	"241A1" 2479+77.40 TO "241A1" 2480+50.71	R+	82.5
C-10	HMA DIKE REPLACEMENT	"241A1" 2481+68.89 TO "241A1" 2481+98.54	L+	30.0
C-10	HMA DIKE REPLACEMENT	"241A1" 2487+94.72 TO "241A1" 2489+96.93	L+	197.4
C-10	HMA DIKE REPLACEMENT	"241A1" 2518+48.52 TO "241A1" 2523+90.80	L+	542.3
C-10	HMA DIKE REPLACEMENT	"241A1" 2527+90.91 TO "241A1" 2529+40.82	L+	149.9
C-10	HMA DIKE REPLACEMENT	"241A1" 2537+73.97 TO "241A1" 2538+16.24	L+	42.3
C-10	HMA DIKE REPLACEMENT	"241A1" 2542+16.17 TO "241A1" 2544+69.91	R+	255.8
C-10	HMA DIKE REPLACEMENT	"241A1" 2556+98.87 TO "241A1" 2558+15.28	R+	118.3
C-10	HMA DIKE REPLACEMENT	"241NP2" 2562+96.59 TO "241NP2" 2563+88.80	R+	92.2
C-10	HMA DIKE REPLACEMENT	"241A1" 2568+71.37 TO "241A1" 2569+75.84	R+	104.5
C-10	HMA DIKE REPLACEMENT	"241NP2" 2576+54.55 TO "241NP2" 2576+97.03	R+	42.4
C-10	HMA DIKE REPLACEMENT	"241A1" 2592+02.77 TO "241A1" 2593+86.47	L+	183.8
C-10	HMA DIKE REPLACEMENT	"241A1" 2622+02.40 TO "241NB1" 270+89.64	R+	1074.3
C-10	HMA DIKE REPLACEMENT	"241NB1" 277+06.01 TO "241WS133" 77+47.75	R+	42.5
C-10	HMA DIKE REPLACEMENT	"241WS133" 90+99.97 TO "241WS133" 94+00.19	L+	300.2
C-10	HMA DIKE REPLACEMENT	"241SB1" 288+36.61 TO "133NE241" 89+52.06	L+	109.7
C-10	HMA DIKE REPLACEMENT	"133NE241" 94+08.36 TO "133NE241" 99+43.93	L+	523.7
C-10	HMA DIKE REPLACEMENT	"241NB1" 305+72.61 TO "241NB1" 307+54.92	R+	179.9
			SUBTOTAL	6248.7
			SHEET TOTAL	13541.8

SUMMARY OF QUANTITIES

REVISED BY RK/WT DATE REVISED 07/22/10
LINDSAY KAUFMANN LINDSAY KAUFMANN
CALCULATED-DESIGNED BY CHECKED BY
CONSULTANT FUNCTIONAL SUPERVISOR MIKE CHESNEY
STATE OF CALIFORNIA - DEPARTMENT OF TRANSPORTATION
Caltrans
H:\pdata\10106739\CADD\TransPW\Div\Merge\8-24-10\c06370pa010.dgn 19-OCT-2010 14:08 trmnguye
LAST REVISION 06-08-10 DATE PLOTTED => 19-OCT-2010 TIME PLOTTED => 14:08
BORDER LAST REVISED 7/2/2010
USERNAME => trmnguye
DGN FILE => c06370pa010.dgn
RELATIVE BORDER SCALE IS IN INCHES 0 1 2 3
UNIT 2998 PROJECT NUMBER & PHASE 12000001431

Dist	COUNTY	ROUTE	POST MILES TOTAL PROJECT	SHEET No.	TOTAL SHEETS
12	Ora	241	15.5/39.0	52	117

Lindsay M. Kaufmann 09/01/10
REGISTERED CIVIL ENGINEER DATE

10-18-10
PLANS APPROVAL DATE

REGISTERED PROFESSIONAL ENGINEER LINDSAY M. KAUFMANN No. C71806 Exp. 12/31/11 CIVIL STATE OF CALIFORNIA

THE STATE OF CALIFORNIA OR ITS OFFICERS OR AGENTS SHALL NOT BE RESPONSIBLE FOR THE ACCURACY OR COMPLETENESS OF SCANNED COPIES OF THIS PLAN SHEET.

RBF CONSULTING
14725 ALTON PKWY
IRVINE, CA. 92618-2027

NOTE:

LENGTHS SHOWN ARE BASED ON SURVEY DATA & FIELD MEASUREMENTS. THEY ARE NOT EXACT CALCULATIONS PER STATION LIMITS SHOWN.

REMOVE DIKE

SHEET No.	DESCRIPTION	STATION LIMITS	LOCATION	REMOVE AC DIKE LF
C-10	HMA DIKE REPLACEMENT	"241SB1" 311+70.75 TO "241SB1" 312+26.99	L+	60.6
C-10	HMA DIKE REPLACEMENT	"241S133" 68+32.68 TO "241S133" 68+76.09	L+	42.7
C-10	HMA DIKE REPLACEMENT	"241NB1" 327+97.47 TO "241NB1" 329+95.08	R+	197.6
C-10	HMA DIKE REPLACEMENT	"241S133" 71+05.96 TO "241SB1" 347+18.07	L+	997.0
C-10	HMA DIKE REPLACEMENT	"133N241" 9336+51.55 TO "241B1" 352+41.07	R+	1738.2
C-10	HMA DIKE REPLACEMENT	"241B1" 369+05.88 TO "241B1" 369+17.01	R+	11.2
C-10	HMA DIKE REPLACEMENT	"241B1" 375+21.57 TO "241B1" 375+60.73	R+	39.2
C-10	HMA DIKE REPLACEMENT	"241B1" 382+90.58 TO "241B1" 394+28.68	R+	1138.0
C-10	HMA DIKE REPLACEMENT	"241B1" 444+23.24 TO "241B1" 447+70.73	R+	347.5
C-10	HMA DIKE REPLACEMENT	"241B1" 496+37.50 TO "241B1" 498+59.41	R+	221.9
C-10	HMA DIKE REPLACEMENT	"241NBR1" 1589+39.28 TO "241NBR1" 1591+21.98	R+	179.9
C-10	HMA DIKE REPLACEMENT	"241SBR1" 2588+01.95 TO "241SBR1" 2593+61.55	L+	691.4
C-10	HMA DIKE REPLACEMENT	"241CH8" 30+48.39 TO "241CH8" 31+50.04	R+	141.4
C-10	HMA DIKE REPLACEMENT	"241CH8" 30+81.08 TO "241CH8" 31+65.21	L+	90.3
C-10	HMA DIKE REPLACEMENT	"241CH8" 37+85.92 TO "241CH8" 44+09.05	L+	621.7
C-10	HMA DIKE REPLACEMENT	"241NBR1" 1597+72.40 TO "241NBR1" 1599+23.30	R+	148.6
C-10	HMA DIKE REPLACEMENT	"241NBR1" 1605+86.95 TO "241NBR1" 1607+56.25	R+	167.4
C-10	HMA DIKE REPLACEMENT	"241CH7" 34+90.61 TO "241CH7" 46+57.82	L+	1154.6
C-10	HMA DIKE REPLACEMENT	"261N241" 4802+80.59 TO "261N241" 4803+16.74	L+	36.3
C-10	HMA DIKE REPLACEMENT	"241SBR1" 2626+16.53 TO "241SBR1" 2626+59.23	L+	42.7
C-10	HMA DIKE REPLACEMENT	"261B241" 2812+63.52 TO "261B241" 2813+55.96	R+	92.5
C-10	HMA DIKE REPLACEMENT	"261B241" 2818+08.14 TO "261B241" 2818+32.06	R+	23.9
C-10	HMA DIKE REPLACEMENT	"261B241" 2819+24.84 TO "261B241" 2826+54.75	R+	730.0
C-10	HMA DIKE REPLACEMENT	"261B241" 2831+46.64 TO "261B241" 2831+84.75	R+	38.1
C-10	HMA DIKE REPLACEMENT	"261B241" 2834+86.34 TO "261B241" 2835+28.95	L+	42.6
C-10	HMA DIKE REPLACEMENT	"241A3" 668+26.71 TO "241A3" 670+29.86	L+	197.5
C-10	HMA DIKE REPLACEMENT	"241A3" 685+98.73 TO "241A3" 705+57.69	L+	1947.8
C-10	HMA DIKE REPLACEMENT	"241A3" 691+79.36 TO "241A3" 693+07.49	R+	128.2
C-10	HMA DIKE REPLACEMENT	"241A3" 698+70.74 TO "241A3" 713+44.29	R+	1457.6
C-10	HMA DIKE REPLACEMENT	"241A3" 716+80.46 TO "241A3" 734+62.77	R+	1776.8
C-10	HMA DIKE REPLACEMENT	"241A3" 721+31.54 TO "241A3" 756+01.93	L+	3451.5
C-10	HMA DIKE REPLACEMENT	"241A3" 738+05.71 TO "241A3" 739+12.81	R+	103.9
C-10	HMA DIKE REPLACEMENT	"241A3" 758+57.29 TO "241A3" 758+87.39	L+	29.8
C-10	HMA DIKE REPLACEMENT	"241SBTOLL1" 773+86.64 TO "241SBTOLL1" 777+55.76	L+	367.3
C-10	HMA DIKE REPLACEMENT	"241A3" 780+27.88 TO "241A3" 780+70.04	R+	42.6
C-10	HMA DIKE REPLACEMENT	"241A3" 782+21.49 TO "241A3" 782+64.25	L+	42.5
C-10	HMA DIKE REPLACEMENT	"241A3" 814+24.46 TO "241A3" 815+26.00	L+	225.0
C-10	HMA DIKE REPLACEMENT	"241A3" 814+97.35 TO "241A3" 815+19.35	R+	22.0
C-10	HMA DIKE REPLACEMENT	"241A3" 817+42.37 TO "241A3" 821+46.54	L+	404.0
C-10	HMA DIKE REPLACEMENT	"241A3" 817+46.68 TO "241A3" 850+79.16	R+	3299.0
C-10	HMA DIKE REPLACEMENT	"241A3" 844+03.04 TO "241A3" 851+19.18	L+	716.1
C-10	HMA DIKE REPLACEMENT	"241A3" 855+21.91 TO "241A3" 857+12.69	R+	193.5
C-10	HMA DIKE REPLACEMENT	"241A3" 862+78.99 TO "241A3" 863+15.97	R+	36.9
C-10	HMA DIKE REPLACEMENT	"241A3" 865+48.79 TO "241A3" 887+61.65	L+	2212.9
C-10	HMA DIKE REPLACEMENT	"241A3" 865+72.49 TO "241A3" 895+34.21	R+	2989.6
C-10	HMA DIKE REPLACEMENT	"241A3" 896+00.39 TO "241NW91" 3901+28.58	R+	523.8
C-10	HMA DIKE REPLACEMENT	"91WS241" 5900+91.64 TO "91ES241" 4911+44.68	L+	1053.0
C-10	HMA DIKE REPLACEMENT	"241NE91" 6909+01.76 TO "241NE91" 6914+55.45	R+	547.9
			SUBTOTAL	30764.3

REMOVE DIKE

SHEET No.	DESCRIPTION	STATION LIMITS	LOCATION	REMOVE AC DIKE LF
C-10	HMA DIKE REPLACEMENT	"91ES241" 4912+27.06 TO "91ES241" 4918+68.56	L+	641.6
C-10	HMA DIKE REPLACEMENT	"91ES241" 4919+38.35 TO "91ES241" 4924+01.26	L+	453.9
C-10	HMA DIKE REPLACEMENT	"91ES241" 4928+44.36 TO "91ES241" 4930+02.66	L+	154.7
C-10	HMA DIKE REPLACEMENT	"91WS241" 5913+85.18 TO "91WS241" 5920+90.42	R+	704.0
C-10	HMA DIKE REPLACEMENT	"91WS241" 5923+42.95 TO "91WS241" 5930+53.41	R+	709.2
C-10	HMA DIKE REPLACEMENT	"241NW91" 3923+29.25 TO "241NW91" 3927+84.24	L+	453.9
C-10	HMA DIKE REPLACEMENT	"241NE91" 6930+42.09 TO "241NE91" 6931+02.99	R+	60.2
C-11	LOCATION 2	"241A1" 2117+85.23 TO "241A1" 2118+33.40	L+	48.8
C-12	LOCATION 3	"241A1" 2159+19.08 TO "241A1" 2159+65.33	L+	45.0
C-12	LOCATION 4	"241A1" 2169+07.21 TO "241A1" 2170+21.89	R+	117.5
C-13	LOCATION 6	"241A1" 2211+76.32 TO "241A1" 2212+97.81	R+	122.5
C-14	LOCATION 11	"241A1" 2263+46.67 TO "241A1" 2263+65.49	L+	18.2
C-14	LOCATION 12	"241A1" 2267+07.99 TO "241A1" 2268+30.46	R+	122.5
C-14	LOCATION 13	"241A1" 2292+14.42 TO "241A1" 2293+36.95	L+	122.5
C-14	LOCATION 14	"241A1" 2299+27.14 TO "241A1" 2300+16.38	R+	90.2
C-15	LOCATION 16	"241A1" 2312+48.10 TO "241A1" 2312+60.42	R+	12.0
C-16	LOCATION 18	"241A1" 2346+35.60 TO "241A1" 2346+53.40	L+	17.5
C-16	LOCATION 19	"241A1" 2377+41.11 TO "241A1" 2378+63.33	R+	122.5
C-16	LOCATION 20	"241A1" 2377+92.11 TO "241A1" 2379+14.54	L+	122.5
C-16	LOCATION 21	"241A1" 2389+16.73 TO "241A1" 2391+14.05	R+	197.7
C-17	LOCATION 22	"241A1" 2383+79.96 TO "241A1" 2392+34.96	L+	855.0
C-18	LOCATION 23	"241A1" 2403+06.39 TO "241A1" 2404+28.61	R+	122.5
C-18	LOCATION 24	"241A1" 2435+64.61 TO "241A1" 2436+85.81	R+	122.5
C-18	LOCATION 25	"241A1" 2434+75.29 TO "241A1" 2442+52.61	L+	780.0
C-18	LOCATION 26	"241A1" 2456+78.57 TO "241A1" 2458+17.15	R+	135.0
C-19	LOCATION 27	"241A1" 2464+93.00 TO "241A1" 2467+71.66	L+	285.2
			SUBTOTAL	6636.9
			SHEET TOTAL	37401.2

SUMMARY OF QUANTITIES

H:\pdata\10106739\CADD\TransPW\Div\Merge\8-24-10\c06370pa011.dgn
19-OCT-2010 14:09
trmnguye
STATE OF CALIFORNIA - DEPARTMENT OF TRANSPORTATION
Caltrans
CONSULTANT FUNCTIONAL SUPERVISOR: MIKE CHESNEY
CALCULATED-DESIGNED BY: LINDSAY KAUFMANN
CHECKED BY: LINDSAY KAUFMANN
REVISED BY: RK/WT
DATE REVISED: 07/22/10
LAST REVISION DATE PLOTTED => 19-OCT-2010
06-08-10 TIME PLOTTED => 14:09
BORDER LAST REVISED 7/2/2010
USERNAME => trmnguye
DGN FILE => c06370pa011.dgn
RELATIVE BORDER SCALE IS IN INCHES 0 1 2 3
UNIT 2998
PROJECT NUMBER & PHASE 12000001431

Dist	COUNTY	ROUTE	POST MILES TOTAL PROJECT	SHEET No.	TOTAL SHEETS
12	Ora	241	15.5/39.0	53	117

Lindsay M. Kaufmann 09/01/10
REGISTERED CIVIL ENGINEER DATE

10-18-10
PLANS APPROVAL DATE

REGISTERED PROFESSIONAL ENGINEER LINDSAY M. KAUFMANN No. C71806 Exp. 12/31/11 CIVIL STATE OF CALIFORNIA

THE STATE OF CALIFORNIA OR ITS OFFICERS OR AGENTS SHALL NOT BE RESPONSIBLE FOR THE ACCURACY OR COMPLETENESS OF SCANNED COPIES OF THIS PLAN SHEET.

RBF CONSULTING
14725 ALTON PKWY
IRVINE, CA. 92618-2027

NOTE:

LENGTHS SHOWN ARE BASED ON SURVEY DATA & FIELD MEASUREMENTS. THEY ARE NOT EXACT CALCULATIONS PER STATION LIMITS SHOWN.

REMOVE DIKE

SHEET No.	DESCRIPTION	STATION LIMITS	LOCATION	REMOVE AC DIKE LF
C-19	LOCATION 28	"241A1" 2473+12.87 TO "241A1" 2475+29.93	R+	208.4
C-19	LOCATION 29	"241A1" 2474+92.54 TO "241A1" 2476+23.01	R+	135.8
C-19	LOCATION 30	"241A1" 2479+42.96 TO "241A1" 2480+65.55	L+	122.5
C-19	LOCATION 31	"241A1" 2480+21.83 TO "241A1" 2482+04.08	L+	186.1
C-20	LOCATION 33	"241A1" 2489+96.93 TO "241A1" 2505+27.97	L+	1505.0
C-21	LOCATION 34	"241A1" 2503+93.15 TO "241A1" 2505+66.12	R+	172.7
C-21	LOCATION 35	"241A1" 2509+36.72 TO "241A1" 2509+86.89	R+	50.2
C-21	LOCATION 36	"241A1" 2511+26.86 TO "241A1" 2511+64.77	L+	37.5
C-21	LOCATION 37	"241A1" 2516+66.72 TO "241A1" 2517+63.05	R+	96.3
C-21	LOCATION 37	"241A1" 2521+00.10 TO "241A1" 2522+35.10	R+	144.0
C-21	LOCATION 38	"241A1" 2523+90.80 TO "241A1" 2527+90.91	L+	400.1
C-21	LOCATION 39	"241A1" 2526+70.72 TO "241A1" 2528+05.71	R+	135.0
C-22	LOCATION 40	"241A1" 2536+27.08 TO "241A1" 2536+44.94	R+	17.9
C-22	LOCATION 41	"241A1" 2549+35.80 TO "241A1" 2550+58.30	L+	122.5
C-23	LOCATION 43	"241A1" 2574+71.28 TO "241A1" 2574+94.04	L+	22.9
C-23	LOCATION 43	"241A1" 2575+48.10 TO "241A1" 2578+60.96	L+	312.9
C-23	LOCATION 43	"241A1" 2579+40.67 TO "241A1" 2585+59.25	L+	618.6
C-23	LOCATION 43	"241A1" 2587+20.34 TO "241A1" 2588+61.54	L+	141.2
C-23	LOCATION 43	"241A1" 2589+44.61 TO "241A1" 2591+18.50	L+	173.9
C-24	LOCATION 44	"241A1" 2596+63.72 TO "241A1" 2597+12.41	R+	48.7
C-24	LOCATION 45	"241NBTOLL2" 2610+91.43 TO "241NBTOLL2" 2612+13.85	R+	122.5
C-24	LOCATION 46	"241A1" 2613+33.88 TO "241A1" 2614+68.60	L+	134.7
C-25	LOCATION 49	"241NB1" 297+90.71 TO "241NB1" 299+08.07	R+	117.2
C-25	LOCATION 50	"241S133" 67+54.77 TO "241S133" 69+85.31	R+	221.0
C-25	LOCATION 50	"241SB1" 320+13.16 TO "241SB1" 328+89.99	L+	876.8
C-25	LOCATION 51	"241B1" 363+30.78 TO "241B1" 364+53.28	R+	122.5
C-26	LOCATION 52	"241B1" 381+35.58 TO "241B1" 382+52.05	R+	116.5
C-26	LOCATION 52	"241B1" 382+80.45 TO "241B1" 382+90.58	R+	10.1
C-26	LOCATION 54	"241B1" 409+62.29 TO "241B1" 410+94.77	R+	134.8
C-26	LOCATION 55	"241B1" 447+70.73 TO "241B1" 448+63.23	R+	92.5
C-27	LOCATION 56	"241B1" 464+63.35 TO "241B1" 465+76.02	R+	110.0
C-27	LOCATION 58	"241NBR1" 1582+43.34 TO "241NBR1" 1584+69.39	R+	222.5
C-28	LOCATION 62	"241SBTOLL1" 776+93.39 TO "241SBTOLL1" 777+51.40	L+	57.5
C-28	LOCATION 63	"241A3" 782+09.50 TO "241A3" 783+18.39	R+	110.0
C-29	LOCATION 64	"241NBTOLL1" 794+82.79 TO "241NBTOLL1" 796+16.70	R+	135.0
C-29	LOCATION 65	"241NBTOLL1" 799+81.33 TO "241NBTOLL1" 801+66.34	R+	185.0
C-29	LOCATION 67	"91ES241" 4918+68.56 TO "91ES241" 4918+81.06	L+	12.5
C-30	LOCATION 68	"91ES241" 4924+90.11 TO "91ES241" 4926+66.61	L+	172.5
C-30	LOCATION 69	"241NE91" 6928+56.31 TO "241NE91" 6930+00.52	L+	144.7
			SUBTOTAL	7750.5
			TOTAL FROM SHEET Q-10	13541.8
			TOTAL FROM SHEET Q-11	37401.2
			GRAND TOTAL	58693.5

SUMMARY OF QUANTITIES

REVISED BY RK/WT DATE REVISED 07/22/10
LINDSAY KAUFMANN LINDSAY KAUFMANN
CALCULATED-DESIGNED BY CHECKED BY
CONSULTANT FUNCTIONAL SUPERVISOR MIKE CHESNEY
STATE OF CALIFORNIA - DEPARTMENT OF TRANSPORTATION
Caltrans
H:\pdata\10106739\CADD\TransPW\Div\Merge\8-24-10\c0G370pa012.dgn 19-OCT-2010 14:09 trmnguye
LAST REVISION 06-08-10 DATE PLOTTED => 19-OCT-2010 TIME PLOTTED => 14:09
BORDER LAST REVISED 7/2/2010
USERNAME => trmnguye
DGN FILE => c0G370pa012.dgn
RELATIVE BORDER SCALE IS IN INCHES 0 1 2 3
UNIT 2998
PROJECT NUMBER & PHASE 12000001431

PLACE HOT MIX ASPHALT

SHEET No.	DESCRIPTION	STATION LIMITS	LOCATION	PLACE HOT MIX ASPHALT (TYPE C)	PLACE HOT MIX ASPHALT (TYPE F)	PLACE HOT MIX ASPHALT (Misc AREA)	HOT MIX ASPHALT (TYPE A)
				LF	LF	SQYD	TON
C-4	MBGR LAYOUT 12E	"241A1" 2154+27.89 TO "241A1" 2154+45.32	R+		17.6		0.24
C-4	MBGR LAYOUT 12E	"241A1" 2485+57.27 TO "241A1" 2485+80.98	R+		23.9		0.32
C-4	MBGR LAYOUT 12E	"241NW91" 3928+08.40 TO "241NW91" 3930+70.55	L+	261.5			2.01
C-4	MBGR LAYOUT 12E	"241NW91" 3930+70.55 TO "241NW91" 3930+79.30	L+		8.7		0.12
C-4	MBGR LAYOUT 12E	"241NW91" 3930+92.69 TO "241NW91" 3930+94.48	L+		1.8		0.02
C-5	TERMINAL SYSTEM UPGRADE	"241A1" 2197+25.29 TO "241A1" 2197+92.46	L+	67.5			0.52
C-5	TERMINAL SYSTEM UPGRADE	"241A1" 2245+85.08 TO "241A1" 2246+54.80	L+	67.5			0.52
C-5	TERMINAL SYSTEM UPGRADE	"241A1" 2414+17.60 TO "241A1" 2414+84.90	R+	67.5			0.52
C-5	TERMINAL SYSTEM UPGRADE	"241A1" 2452+19.75 TO "241A1" 2452+85.27	L+	67.5			0.52
C-5	TERMINAL SYSTEM UPGRADE	"241A1" 2468+38.86 TO "241A1" 2477+00.10	L+	39.2			0.30
C-5	TERMINAL SYSTEM UPGRADE	"241A1" 2476+71.43 TO "241A1" 2482+65.12	L+	67.5			0.52
C-5	TERMINAL SYSTEM UPGRADE	"241A1" 2479+77.17 TO "241A1" 2538+83.36	R+	67.5			0.52
C-9	HMA DIKE REPLACEMENT	"241A1" 2052+12.17 TO "241A1" 2068+05.55	R+		1579.9		21.11
C-9	HMA DIKE REPLACEMENT	"241A1" 2064+87.30 TO "241A1" 2065+29.55	L+		42.3		0.56
C-9	HMA DIKE REPLACEMENT	"241A1" 2077+45.48 TO "241A1" 2086+97.87	L+		952.6		12.73
C-9	HMA DIKE REPLACEMENT	"241A1" 2086+49.16 TO "241A1" 2086+91.78	R+		42.6		0.57
C-9	HMA DIKE REPLACEMENT	"241A1" 2088+26.52 TO "241A1" 2088+56.95	L+		30.4		0.41
C-9	HMA DIKE REPLACEMENT	"241A1" 2095+90.51 TO "241A1" 2101+99.85	R+		601.4		8.04
C-9	HMA DIKE REPLACEMENT	"241A1" 2106+37.71 TO "241A1" 2109+27.64	R+		286.2		3.82
C-9	HMA DIKE REPLACEMENT	"241A1" 2114+70.33 TO "241A1" 2115+13.35	R+		42.5		0.57
C-9	HMA DIKE REPLACEMENT	"241A1" 2125+80.85 TO "241A1" 2126+25.17	R+		44.3		0.59
C-9	HMA DIKE REPLACEMENT	"241A1" 2128+95.09 TO "241A1" 2131+12.55	L+		217.5		2.91
C-9	HMA DIKE REPLACEMENT	"241A1" 2131+12.55 TO "241A1" 2131+79.80	L+	67.5			0.52
C-9	HMA DIKE REPLACEMENT	"241A1" 2137+20.18 TO "241A1" 2138+87.56	L+		167.4		2.24
C-9	HMA DIKE REPLACEMENT	"241A1" 2142+79.24 TO "241A1" 2143+09.24	R+	30.0			0.23
C-9	HMA DIKE REPLACEMENT	"241A1" 2146+60.07 TO "241A1" 2146+96.55	R+	37.2			0.29
C-9	HMA DIKE REPLACEMENT	"241A1" 2145+96.55 TO "241A1" 2148+49.77	R+		156.8		2.10
C-9	HMA DIKE REPLACEMENT	"241A1" 2147+77.81 TO "241A1" 2152+74.68	L+		483.8		6.47
C-9	HMA DIKE REPLACEMENT	"241A1" 2154+01.78 TO "241A1" 2154+91.91	R+		92.4		1.23
C-9	HMA DIKE REPLACEMENT	"241A1" 2157+20.11 TO "241A1" 2157+49.46	L+		28.3		0.38
C-9	HMA DIKE REPLACEMENT	"241A1" 2158+08.87 TO "241A1" 2158+40.13	L+	30.0			0.23
C-9	HMA DIKE REPLACEMENT	"241A1" 2159+48.86 TO "241A1" 2163+39.10	R+		414.9		5.55
C-9	HMA DIKE REPLACEMENT	"241A1" 2178+76.86 TO "241A1" 2177+46.04	L+		67.5		0.90
C-9	HMA DIKE REPLACEMENT	"241A1" 2177+46.04 TO "241A1" 2178+15.10	L+	67.5			0.52
C-9	HMA DIKE REPLACEMENT	"241A1" 2186+85.89 TO "241A1" 2187+29.55	L+		42.5		0.57
C-9	HMA DIKE REPLACEMENT	"241A1" 2196+82.69 TO "241A1" 2197+25.29	L+		42.6		0.57
C-9	HMA DIKE REPLACEMENT	"241A1" 2206+18.32 TO "241A1" 2206+60.70	R+		42.5		0.57
C-9	HMA DIKE REPLACEMENT	"241A1" 2209+65.04 TO "241A1" 2209+69.68	L+		31.0		0.41
C-9	HMA DIKE REPLACEMENT	"241A1" 2213+67.35 TO "241A1" 2214+09.55	R+		42.3		0.57
C-9	HMA DIKE REPLACEMENT	"241A1" 2218+87.86 TO "241A1" 2219+30.34	L+		42.5		0.57
C-9	HMA DIKE REPLACEMENT	"241A1" 2242+00.29 TO "241A1" 2242+06.77	L+	45.8			0.35
C-9	HMA DIKE REPLACEMENT	"241A1" 2242+06.77 TO "241A1" 2246+32.49	L+		371.6		4.97
C-9	HMA DIKE REPLACEMENT	"241A1" 2280+68.84 TO "241A1" 2281+11.90	R+		42.2		0.56
			SUBTOTAL	983.7	5960.1		87.23

NOTE:

LENGTHS SHOWN ARE BASED ON SURVEY DATA & FIELD MEASUREMENTS. THEY ARE NOT EXACT CALCULATIONS PER STATION LIMITS SHOWN.

Dist	COUNTY	ROUTE	POST MILES TOTAL PROJECT	SHEET No.	TOTAL SHEETS
12	Ora	241	15.5/39.0	54	117

Lindsay M. Kaufmann 09/01/10
REGISTERED CIVIL ENGINEER DATE

10-18-10
PLANS APPROVAL DATE

REGISTERED PROFESSIONAL ENGINEER LINDSAY M. KAUFMANN No. C71806 Exp. 12/31/11 CIVIL STATE OF CALIFORNIA

THE STATE OF CALIFORNIA OR ITS OFFICERS OR AGENTS SHALL NOT BE RESPONSIBLE FOR THE ACCURACY OR COMPLETENESS OF SCANNED COPIES OF THIS PLAN SHEET.

RBF CONSULTING
14725 ALTON PKWY
IRVINE, CA. 92618-2027

SUMMARY OF QUANTITIES

Q-13

STATE OF CALIFORNIA - DEPARTMENT OF TRANSPORTATION
Caltrans
CONSULTANT FUNCTIONAL SUPERVISOR: MIKE CHESNEY
CALCULATED-DESIGNED BY: LINDSAY KAUFMANN
CHECKED BY: LINDSAY KAUFMANN
REVISED BY: RK/WT
DATE REVISED: 07/22/10
H:\pdata\10106739\CADD\TransPW\Div\Merge\8-24-10\c0G370pa013.dgn
trmnguye 19-OCT-2010 14:09

LAST REVISION 06-08-10 | DATE PLOTTED => 19-OCT-2010 | TIME PLOTTED => 14:09

PLACE HOT MIX ASPHALT

SHEET No.	DESCRIPTION	STATION LIMITS	LOCATION	PLACE HOT MIX ASPHALT (TYPE C)	PLACE HOT MIX ASPHALT (TYPE F)	PLACE HOT MIX ASPHALT (Misc AREA)	HOT MIX ASPHALT (TYPE A)
				LF	LF	SQYD	TON
C-9	HMA DIKE REPLACEMENT	"241A1" 2345+28.86 TO "241A1" 2345+72.16	L+		42.5		0.57
C-9	HMA DIKE REPLACEMENT	"241A1" 2358+76.03 TO "241A1" 2361+29.58	L+		249.7		3.34
C-9	HMA DIKE REPLACEMENT	"241A1" 2372+86.77 TO "241A1" 2373+18.48	R+		31.7		0.42
C-9	HMA DIKE REPLACEMENT	"241A1" 2391+70.90 TO "241A1" 2392+02.16	R+		31.3		0.42
C-9	HMA DIKE REPLACEMENT	"241A1" 2391+74.34 TO "241A1" 2392+05.49	R+		30.8		0.41
C-9	HMA DIKE REPLACEMENT	"241A1" 2392+88.06 TO "241A1" 2393+05.68	R+		17.6		0.24
C-9	HMA DIKE REPLACEMENT	"241A1" 2396+89.32 TO "241A1" 2397+13.20	L+		23.9		0.32
C-9	HMA DIKE REPLACEMENT	"241A1" 2397+13.20 TO "241A1" 2397+80.67	L+	67.5			0.52
C-9	HMA DIKE REPLACEMENT	"241A1" 2409+97.18 TO "241A1" 2410+64.44	L+		67.3		0.90
C-9	HMA DIKE REPLACEMENT	"241A1" 2414+17.61 TO "241A1" 2414+84.90	R+	67.5			0.52
C-9	HMA DIKE REPLACEMENT	"241A1" 2414+84.90 TO "241A1" 2417+28.37	R+		243.5		3.25
C-9	HMA DIKE REPLACEMENT	"241A1" 2419+45.86 TO "241A1" 2419+63.47	R+		17.6		0.24
C-9	HMA DIKE REPLACEMENT	"241A1" 2422+27.54 TO "241A1" 2426+44.14	L+		416.6		5.57
C-9	HMA DIKE REPLACEMENT	"241A1" 2426+53.25 TO "241A1" 2426+70.33	R+		17.1		0.23
C-10	HMA DIKE REPLACEMENT	"241A1" 2428+73.98 TO "241A1" 2428+97.86	L+		23.9		0.32
C-10	HMA DIKE REPLACEMENT	"241A1" 2428+97.86 TO "241A1" 2429+00.08	L+	2.2			0.02
C-10	HMA DIKE REPLACEMENT	"241A1" 2441+76.27 TO "241A1" 2443+32.08	R+		155.9		2.08
C-10	HMA DIKE REPLACEMENT	"241A1" 2442+52.61 TO "241A1" 2444+26.15	L+		173.5		2.32
C-10	HMA DIKE REPLACEMENT	"241A1" 2446+67.36 TO "241A1" 2452+19.75	L+		561.3		7.50
C-10	HMA DIKE REPLACEMENT	"241A1" 2452+19.75 TO "241A1" 2452+85.35	L+	67.5			0.52
C-10	HMA DIKE REPLACEMENT	"241A1" 2475+33.34 TO "241A1" 2476+71.64	L+		144.5		1.93
C-10	HMA DIKE REPLACEMENT	"241A1" 2479+77.40 TO "241A1" 2480+50.71	R+		82.5		1.10
C-10	HMA DIKE REPLACEMENT	"241A1" 2481+68.89 TO "241A1" 2481+98.54	L+		30.0		0.40
C-10	HMA DIKE REPLACEMENT	"241A1" 2488+01.13 TO "241A1" 2489+96.93	L+		191.1		2.55
C-10	HMA DIKE REPLACEMENT	"241A1" 2518+48.52 TO "241A1" 2523+90.80	L+		542.3		7.25
C-10	HMA DIKE REPLACEMENT	"241A1" 2527+90.91 TO "241A1" 2529+40.82	L+		149.9		2.00
C-10	HMA DIKE REPLACEMENT	"241A1" 2537+73.97 TO "241A1" 2538+16.24	L+		42.3		0.57
C-10	HMA DIKE REPLACEMENT	"241A1" 2542+16.17 TO "241A1" 2544+69.91	R+		255.8		3.42
C-10	HMA DIKE REPLACEMENT	"241A1" 2556+98.87 TO "241A1" 2557+85.93	R+	88.5			0.68
C-10	HMA DIKE REPLACEMENT	"241A1" 2557+85.93 TO "241A1" 2558+15.28	R+		29.8		0.40
C-10	HMA DIKE REPLACEMENT	"241NP2" 2562+96.59 TO "241NP2" 2563+88.80	R+		92.2		1.23
C-10	HMA DIKE REPLACEMENT	"241A1" 2568+71.37 TO "241A1" 2569+75.84	R+		104.5		1.40
C-10	HMA DIKE REPLACEMENT	"241NP2" 2576+54.55 TO "241NP2" 2576+97.03	R+		42.4		0.57
C-10	HMA DIKE REPLACEMENT	"241A1" 2592+02.77 TO "241A1" 2592+95.11	L+		92.4		1.23
C-10	HMA DIKE REPLACEMENT	"241A1" 2592+95.11 TO "241A1" 2593+86.47	L+	91.4			0.70
C-10	HMA DIKE REPLACEMENT	"241A1" 2622+02.40 TO "241NB1" 270+89.64	R+		1074.3		14.36
C-10	HMA DIKE REPLACEMENT	"241NB1" 277+06.01 TO "241WS133" 77+47.75	R+		42.5		0.57
C-10	HMA DIKE REPLACEMENT	"241WS133" 90+99.97 TO "241WS133" 93+94.08	L+		294.1		3.93
C-10	HMA DIKE REPLACEMENT	"241SB1" 288+36.61 TO "133NE241" 88+92.09	L+		48.9		0.65
C-10	HMA DIKE REPLACEMENT	"133NE241" 88+92.09 TO "133NE241" 89+52.06	L+	60.8			0.47
C-10	HMA DIKE REPLACEMENT	"133NE241" 94+08.36 TO "133NE241" 99+43.93	L+		523.7		7.00
C-10	HMA DIKE REPLACEMENT	"241NB1" 305+72.61 TO "241NB1" 307+54.92	R+		179.9		2.40
C-10	HMA DIKE REPLACEMENT	"241SB1" 311+70.75 TO "241SB1" 312+26.99	L+	60.6			0.47
C-10	HMA DIKE REPLACEMENT	"241S133" 68+32.68 TO "241S133" 68+76.09	L+		42.7		0.57
C-10	HMA DIKE REPLACEMENT	"241NB1" 327+97.47 TO "241NB1" 329+95.08	R+		197.6		2.64
C-10	HMA DIKE REPLACEMENT	"241S133" 71+05.96 TO "241SB1" 347+18.07	L+		997.0		13.32
C-10	HMA DIKE REPLACEMENT	"133N241" 9336+51.55 TO "241B1" 352+41.07	R+		1738.2		23.23
C-10	HMA DIKE REPLACEMENT	"241B1" 369+05.88 TO "241B1" 369+17.01	R+	11.2			0.09
C-10	HMA DIKE REPLACEMENT	"241B1" 375+21.57 TO "241B1" 375+60.73	R+		39.2		0.52
C-10	HMA DIKE REPLACEMENT	"241B1" 382+90.58 TO "241B1" 394+22.66	R+		1132.0		15.13
			SUBTOTAL	517.1	10213.8		140.49

NOTE:

LENGTHS SHOWN ARE BASED ON SURVEY DATA & FIELD MEASUREMENTS. THEY ARE NOT EXACT CALCULATIONS PER STATION LIMITS SHOWN.

Dist	COUNTY	ROUTE	POST MILES TOTAL PROJECT	SHEET No.	TOTAL SHEETS
12	Ora	241	15.5/39.0	55	117

Lindsay M. Kaufmann 09/01/10
REGISTERED CIVIL ENGINEER DATE

10-18-10
PLANS APPROVAL DATE

REGISTERED PROFESSIONAL ENGINEER LINDSAY M. KAUFMANN No. C71806 Exp. 12/31/11 CIVIL STATE OF CALIFORNIA

THE STATE OF CALIFORNIA OR ITS OFFICERS OR AGENTS SHALL NOT BE RESPONSIBLE FOR THE ACCURACY OR COMPLETENESS OF SCANNED COPIES OF THIS PLAN SHEET.

RBF CONSULTING
14725 ALTON PKWY
IRVINE, CA. 92618-2027

SUMMARY OF QUANTITIES

Q-14

STATE OF CALIFORNIA - DEPARTMENT OF TRANSPORTATION
Caltrans
CONSULTANT FUNCTIONAL SUPERVISOR: MIKE CHESNEY
CALCULATED-DESIGNED BY: LINDSAY KAUFMANN
CHECKED BY: LINDSAY KAUFMANN
REVISED BY: RK/WT
DATE REVISED: 07/22/10

H:\pdata\10106739\CADD\TransPW\Div\Merge\8-24-10\c0G370pa014.dgn 19-OCT-2010 14:09 trmnguye

LAST REVISION 06-08-10 DATE PLOTTED => 19-OCT-2010 TIME PLOTTED => 14:09

PLACE HOT MIX ASPHALT

SHEET No.	DESCRIPTION	STATION LIMITS	LOCATION	PLACE HOT MIX ASPHALT (TYPE C)	PLACE HOT MIX ASPHALT (TYPE F)	PLACE HOT MIX ASPHALT (Misc AREA)	HOT MIX ASPHALT (TYPE A)
				LF	LF	SQYD	TON
C-10	HMA DIKE REPLACEMENT	"241B1" 444+23.24 TO "241B1" 447+70.73	R+		347.5		4.64
C-10	HMA DIKE REPLACEMENT	"241B1" 496+37.50 TO "241B1" 498+59.41	R+		221.9		2.97
C-10	HMA DIKE REPLACEMENT	"241NBR1" 1589+39.28 TO "241NBR1" 1591+21.98	R+		179.9		2.40
C-10	HMA DIKE REPLACEMENT	"241SBR1" 2588+01.95 TO "241SBR1" 2593+61.55	L+		691.4		9.24
C-10	HMA DIKE REPLACEMENT	"241CH8" 30+48.39 TO "241CH8" 31+44.08	R+		135.4		1.81
C-10	HMA DIKE REPLACEMENT	"241CH8" 30+81.08 TO "241CH8" 31+41.35	L+	60.4			0.46
C-10	HMA DIKE REPLACEMENT	"241CH8" 31+41.35 TO "241CH8" 31+65.21	L+		23.9		0.32
C-10	HMA DIKE REPLACEMENT	"241CH8" 37+85.92 TO "241CH8" 44+09.05	L+		621.7		8.31
C-10	HMA DIKE REPLACEMENT	"241NBR1" 1597+72.40 TO "241NBR1" 1599+23.30	R+		148.6		1.99
C-10	HMA DIKE REPLACEMENT	"241NBR1" 1605+86.95 TO "241NBR1" 1607+56.25	R+		167.4		2.24
C-10	HMA DIKE REPLACEMENT	"241CH7" 34+90.61 TO "241CH7" 46+57.82	L+		1154.6		15.43
C-10	HMA DIKE REPLACEMENT	"261N241" 4802+80.59 TO "261N241" 4803+16.74	L+	36.3			0.28
C-10	HMA DIKE REPLACEMENT	"241SBR1" 2626+16.53 TO "241SBR1" 2626+59.23	L+		42.7		0.57
C-10	HMA DIKE REPLACEMENT	"261B241" 2812+63.52 TO "261B241" 2813+55.96	R+		92.5		1.24
C-10	HMA DIKE REPLACEMENT	"261B241" 2818+08.14 TO "261B241" 2818+32.06	R+		23.9		0.32
C-10	HMA DIKE REPLACEMENT	"261B241" 2819+24.84 TO "261B241" 2826+54.75	R+		730.0		9.76
C-10	HMA DIKE REPLACEMENT	"261B241" 2831+46.64 TO "261B241" 2831+84.75	R+	38.1			0.29
C-10	HMA DIKE REPLACEMENT	"261B241" 2834+86.34 TO "261B241" 2835+28.95	L+		42.6		0.57
C-10	HMA DIKE REPLACEMENT	"241A3" 668+32.54 TO "241A3" 670+29.86	L+		192.5		2.57
C-10	HMA DIKE REPLACEMENT	"241A3" 685+98.73 TO "241A3" 705+57.69	L+		1947.8		1.71
C-10	HMA DIKE REPLACEMENT	"241A3" 691+79.36 TO "241A3" 693+07.49	R+		128.2		26.03
C-10	HMA DIKE REPLACEMENT	"241A3" 698+70.74 TO "241A3" 713+38.48	R+		1451.8		19.40
C-10	HMA DIKE REPLACEMENT	"241A3" 716+80.46 TO "241A3" 734+62.77	R+		1776.8		23.75
C-10	HMA DIKE REPLACEMENT	"241A3" 721+31.54 TO "241A3" 756+01.93	L+		3451.5		46.13
C-10	HMA DIKE REPLACEMENT	"241A3" 738+05.71 TO "241A3" 738+71.52	R+	67.1			0.52
C-10	HMA DIKE REPLACEMENT	"241A3" 738+71.52 TO "241A3" 739+12.81	R+		36.8		0.49
C-10	HMA DIKE REPLACEMENT	"241A3" 758+63.27 TO "241A3" 758+87.39	L+		23.9		0.32
C-10	HMA DIKE REPLACEMENT	"241SBTOLL1" 773+86.64 TO "241SBTOLL1" 776+93.38	L+		305.5		4.08
C-10	HMA DIKE REPLACEMENT	"241SBTOLL1" 776+93.38 TO "241SBTOLL1" 777+55.76	L+	61.8			0.48
C-10	HMA DIKE REPLACEMENT	"241A3" 780+27.88 TO "241A3" 780+70.04	R+		42.6		0.57
C-10	HMA DIKE REPLACEMENT	"241A3" 782+21.49 TO "241A3" 782+64.25	L+		42.5		0.57
C-10	HMA DIKE REPLACEMENT	"241A3" 814+24.46 TO "241A3" 815+26.00	L+		225.0		3.01
C-10	HMA DIKE REPLACEMENT	"241A3" 814+97.35 TO "241A3" 815+15.17	R+		17.8		0.24
C-10	HMA DIKE REPLACEMENT	"241A3" 817+48.37 TO "241A3" 820+76.42	L+		327.8		4.38
C-10	HMA DIKE REPLACEMENT	"241A3" 820+76.42 TO "241A3" 821+46.54	L+	70.2			0.54
C-10	HMA DIKE REPLACEMENT	"241A3" 817+46.68 TO "241A3" 850+79.16	R+		3299.0		44.09
C-10	HMA DIKE REPLACEMENT	"241A3" 844+03.04 TO "241A3" 851+19.18	L+		716.1		9.57
C-10	HMA DIKE REPLACEMENT	"241A3" 855+21.91 TO "241A3" 857+12.69	R+		193.5		2.59
C-10	HMA DIKE REPLACEMENT	"241A3" 862+78.99 TO "241A3" 863+15.97	R+	36.9			0.28
C-10	HMA DIKE REPLACEMENT	"241A3" 865+48.79 TO "241A3" 887+61.65	L+		2212.9		39.60
C-10	HMA DIKE REPLACEMENT	"241A3" 865+72.49 TO "241A3" 895+34.21	R+		2962.7		29.58
C-10	HMA DIKE REPLACEMENT	"241A3" 896+00.39 TO "241NW91" 3901+28.58	R+		523.8		7.00
C-10	HMA DIKE REPLACEMENT	"91WS241" 5900+91.64 TO 91ES241 4911+44.68	L+		1053.0		14.07
C-10	HMA DIKE REPLACEMENT	"241NE91" 6909+01.76 TO "241NE91" 6914+55.45	R+		547.9		7.32
C-10	HMA DIKE REPLACEMENT	"91ES241" 4912+27.06 TO "91ES241" 4918+68.56	L+		641.6		8.57
C-10	HMA DIKE REPLACEMENT	"91ES241" 4919+38.35 TO "91ES241" 4924+01.26	L+		453.9		6.07
C-10	HMA DIKE REPLACEMENT	"91ES241" 4928+44.36 TO "91ES241" 4930+02.66	L+		154.7		2.07
C-10	HMA DIKE REPLACEMENT	"91WS241" 5913+85.18 TO "91WS241" 5920+90.42	R+		704.0		9.41
C-10	HMA DIKE REPLACEMENT	"91WS241" 5923+48.83 TO "91WS241" 5930+53.41	R+		703.4		9.40
C-10	HMA DIKE REPLACEMENT	"241NW91" 3923+29.25 TO "241NW91" 3927+84.24	L+		453.9		6.07
			SUBTOTAL	370.8	29214.6		393.31

NOTE:

LENGTHS SHOWN ARE BASED ON SURVEY DATA & FIELD MEASUREMENTS. THEY ARE NOT EXACT CALCULATIONS PER STATION LIMITS SHOWN.

Dist	COUNTY	ROUTE	POST MILES TOTAL PROJECT	SHEET No.	TOTAL SHEETS
12	Ora	241	15.5/39.0	56	117

Lindsay M. Kaufmann 09/01/10
REGISTERED CIVIL ENGINEER DATE

10-18-10
PLANS APPROVAL DATE

REGISTERED PROFESSIONAL ENGINEER LINDSAY M. KAUFMANN No. C71806 Exp. 12/31/11 CIVIL STATE OF CALIFORNIA

THE STATE OF CALIFORNIA OR ITS OFFICERS OR AGENTS SHALL NOT BE RESPONSIBLE FOR THE ACCURACY OR COMPLETENESS OF SCANNED COPIES OF THIS PLAN SHEET.

RBF CONSULTING
14725 ALTON PKWY
IRVINE, CA. 92618-2027

SUMMARY OF QUANTITIES

STATE OF CALIFORNIA - DEPARTMENT OF TRANSPORTATION
Caltrans
CONSULTANT FUNCTIONAL SUPERVISOR: MIKE CHESNEY
CALCULATED-DESIGNED BY: LINDSAY KAUFMANN
CHECKED BY: LINDSAY KAUFMANN
REVISED BY: RK/WT
DATE REVISED: 07/22/10
trmnguye
19-OCT-2010 14:09
H:\pdata\10106739\CADD\TransPW\Div\Merge\8-24-10\c0G370pa015.dgn
LAST REVISION 06-08-10
DATE PLOTTED => 19-OCT-2010
TIME PLOTTED => 14:09

Dist	COUNTY	ROUTE	POST MILES TOTAL PROJECT	SHEET No.	TOTAL SHEETS
12	Ora	241	15.5/39.0	57	117

Lindsay M. Kaufmann 09/01/10
REGISTERED CIVIL ENGINEER DATE

10-18-10
PLANS APPROVAL DATE

REGISTERED PROFESSIONAL ENGINEER LINDSAY M. KAUFMANN No. C71806 Exp.12/31/11 CIVIL STATE OF CALIFORNIA

THE STATE OF CALIFORNIA OR ITS OFFICERS OR AGENTS SHALL NOT BE RESPONSIBLE FOR THE ACCURACY OR COMPLETENESS OF SCANNED COPIES OF THIS PLAN SHEET.

RBF CONSULTING
14725 ALTON PKWY
IRVINE, CA. 92618-2027

PLACE HOT MIX ASPHALT

SHEET No.	DESCRIPTION	STATION LIMITS	LOCATION	PLACE HOT MIX ASPHALT (TYPE C)	PLACE HOT MIX ASPHALT (TYPE F)	PLACE HOT MIX ASPHALT (Misc AREA)	HOT MIX ASPHALT (TYPE A)
				LF	LF	SQYD	TON
C-10	HMA DIKE REPLACEMENT	"241NE91" 6930+42.09 TO "241NE91" 6930+97.11	R+		54.4		0.73
C-11	LOCATION 2	"241A1" 2117+85.23 TO "241A1" 2118+33.40	L+		48.8		0.65
C-12	LOCATION 4	"241A1" 2169+07.21 TO "241A1" 2169+56.01	R+	50.0			0.38
C-12	LOCATION 4	"241A1" 2169+56.01 TO "241A1" 2170+21.89	R+		67.5		0.90
C-13	LOCATION 6	"241A1" 2211+76.32 TO "241A1" 2212+43.82	R+	67.5			0.52
C-13	LOCATION 6	"241A1" 2212+43.82 TO "241A1" 2212+97.81	R+		55.0		0.74
C-14	LOCATION 11	"241A1" 2263+46.67 TO "241A1" 2263+65.49	L+	18.2			0.14
C-14	LOCATION 12	"241A1" 2267+07.99 TO "241A1" 2267+75.46	R+	67.5			0.52
C-14	LOCATION 12	"241A1" 2267+75.46 TO "241A1" 2268+30.46	R+		55.0		0.74
C-14	LOCATION 13	"241A1" 2292+14.42 TO "241A1" 2292+69.42	L+		55.0		0.74
C-14	LOCATION 13	"241A1" 2292+69.42 TO "241A1" 2293+36.95	L+	67.5			0.52
C-14	LOCATION 14	"241A1" 2299+27.14 TO "241A1" 2300+16.38	R+		90.2		1.21
C-15	LOCATION 16	"241A1" 2312+48.10 TO "241A1" 2312+60.42	R+		12.0		0.16
C-16	LOCATION 18	"241A1" 2346+35.60 TO "241A1" 2346+53.40	L+	17.5			0.13
C-16	LOCATION 19	"241A1" 2377+41.11 TO "241A1" 2378+08.54	R+	67.5			0.52
C-16	LOCATION 19	"241A1" 2378+08.54 TO "241A1" 2378+63.33	R+		55.0		0.74
C-16	LOCATION 20	"241A1" 2377+92.11 TO "241A1" 2378+47.13	L+		55.0		0.74
C-16	LOCATION 20	"241A1" 2378+47.13 TO "241A1" 2379+14.54	L+	67.5			0.52
C-16	LOCATION 21	"241A1" 2389+16.73 TO "241A1" 2391+14.05	R+	197.7			1.52
C-17	LOCATION 22	"241A1" 2383+79.96 TO "241A1" 2392+34.96	L+		855.0		11.43
C-18	LOCATION 23	"241A1" 2403+06.39 TO "241A1" 2403+73.64	R+	67.5			0.52
C-18	LOCATION 23	"241A1" 2403+73.64 TO "241A1" 2404+28.61	R+		55.0		0.74
C-18	LOCATION 24	"241A1" 2435+64.61 TO "241A1" 2436+31.17	R+	67.5			0.52
C-18	LOCATION 24	"241A1" 2436+31.17 TO "241A1" 2436+85.81	R+		55.0		0.74
C-18	LOCATION 25	"241A1" 2434+75.29 TO "241A1" 2442+52.61	L+		780.0		10.42
C-18	LOCATION 26	"241A1" 2456+78.57 TO "241A1" 2457+47.89	R+	67.5			0.52
C-18	LOCATION 26	"241A1" 2457+47.89 TO "241A1" 2458+17.15	R+		67.5		0.90
C-19	LOCATION 27	"241A1" 2464+93.00 TO "241A1" 2466+86.13	L+		197.5		2.64
C-19	LOCATION 27	"241A1" 2466+86.13 TO "241A1" 2467+71.66	L+	87.5			0.67
C-19	LOCATION 28	"241A1" 2473+12.87 TO "241A1" 2474+99.99	R+	178.4			1.37
C-19	LOCATION 28	"241A1" 2474+99.99 TO "241A1" 2475+29.93	R+		30.0		0.40
C-19	LOCATION 29	"241A1" 2474+92.54 TO "241A1" 2476+23.01	R+		135.8		1.81
C-19	LOCATION 30	"241A1" 2479+42.96 TO "241A1" 2479+97.96	L+		55.0		0.74
C-19	LOCATION 30	"241A1" 2479+97.96 TO "241A1" 2480+65.55	L+	67.5			0.52
C-19	LOCATION 31	"241A1" 2480+21.83 TO "241A1" 2482+04.08	L+		186.1		2.49
C-20	LOCATION 33	"241A1" 2489+96.93 TO "241A1" 2504+60.49	L+		1437.5		19.21
C-20	LOCATION 33	"241A1" 2504+60.49 TO "241A1" 2505+27.97	L+	67.5			0.52
C-21	LOCATION 34	"241A1" 2503+93.15 TO "241A1" 2504+36.12	R+	42.7			0.33
C-21	LOCATION 34	"241A1" 2504+36.12 TO "241A1" 2505+66.12	R+		130.0		1.74
C-21	LOCATION 35	"241A1" 2509+36.72 TO "241A1" 2509+86.89	R+	50.2			0.39
C-21	LOCATION 36	"241A1" 2511+26.86 TO "241A1" 2511+64.77	L+	37.5			0.29
C-21	LOCATION 37	"241A1" 2516+66.72 TO "241A1" 2516+95.55	R+	28.8			0.22
C-21	LOCATION 37	"241A1" 2516+95.55 TO "241A1" 2517+63.05	R+		67.5		0.90
C-21	LOCATION 37	"241A1" 2521+00.10 TO "241A1" 2521+67.60	R+	76.5			0.59
C-21	LOCATION 37	"241A1" 2521+67.60 TO "241A1" 2522+35.10	R+		67.5		0.90
C-21	LOCATION 38	"241A1" 2523+90.80 TO "241A1" 2527+90.91	L+		400.1		5.35
C-21	LOCATION 39	"241A1" 2526+70.72 TO "241A1" 2527+38.21	R+	67.5			0.52
C-21	LOCATION 39	"241A1" 2527+38.21 TO "241A1" 2528+05.71	R+		67.5		0.90
C-22	LOCATION 40	"241A1" 2536+27.08 TO "241A1" 2536+44.94	R+	17.9			0.14
C-22	LOCATION 41	"241A1" 2549+35.80 TO "241A1" 2549+90.80	L+		55.0		0.74
			SUBTOTAL	1545.3	5189.8		81.25

NOTE:

LENGTHS SHOWN ARE BASED ON SURVEY DATA & FIELD MEASUREMENTS. THEY ARE NOT EXACT CALCULATIONS PER STATION LIMITS SHOWN.

SUMMARY OF QUANTITIES

H:\pdata\10106739\CADD\TransPW\Div\Merge\8-24-10\c0G370pa016.dgn
19-OCT-2010 14:09
trmnguye
STATE OF CALIFORNIA - DEPARTMENT OF TRANSPORTATION
Caltrans
CONSULTANT FUNCTIONAL SUPERVISOR: MIKE CHESNEY
CALCULATED-DESIGNED BY: LINDSAY KAUFMANN
CHECKED BY: LINDSAY KAUFMANN
REVISED BY: RK/WT
DATE REVISED: 07/22/10
LAST REVISION 06-08-10
DATE PLOTTED => 19-OCT-2010
TIME PLOTTED => 14:09
BORDER LAST REVISED 7/2/2010
USERNAME => trmnguye
DGN FILE => c0G370pa016.dgn
RELATIVE BORDER SCALE IS IN INCHES 0 1 2 3
UNIT 2998
PROJECT NUMBER & PHASE 12000001431

Dist	COUNTY	ROUTE	POST MILES TOTAL PROJECT	SHEET No.	TOTAL SHEETS
12	Ora	241	15.5/39.0	58	117

Lindsay M. Kaufmann 09/01/10
REGISTERED CIVIL ENGINEER DATE

10-18-10
PLANS APPROVAL DATE

REGISTERED PROFESSIONAL ENGINEER LINDSAY M. KAUFMANN No. C71806 Exp. 12/31/11 CIVIL STATE OF CALIFORNIA

THE STATE OF CALIFORNIA OR ITS OFFICERS OR AGENTS SHALL NOT BE RESPONSIBLE FOR THE ACCURACY OR COMPLETENESS OF SCANNED COPIES OF THIS PLAN SHEET.

RBF CONSULTING
14725 ALTON PKWY
IRVINE, CA. 92618-2027

PLACE HOT MIX ASPHALT

SHEET No.	DESCRIPTION	STATION LIMITS	LOCATION	PLACE HOT MIX ASPHALT (TYPE C)	PLACE HOT MIX ASPHALT (TYPE F)	PLACE HOT MIX ASPHALT (MISC AREA)	HOT MIX ASPHALT (TYPE A)
				LF	LF	SQYD	TON
C-22	LOCATION 41	"241A1" 2549+90.80 TO "241A1" 2550+58.30	L+	67.5			0.52
C-23	LOCATION 43	"241A1" 2574+71.28 TO "241A1" 2574+94.04	L+		22.9		0.31
C-23	LOCATION 43	"241A1" 2575+48.10 TO "241A1" 2578+60.96	L+		312.9		4.18
C-23	LOCATION 43	"241A1" 2579+40.67 TO "241A1" 2585+59.25	L+		618.6		8.27
C-23	LOCATION 43	"241A1" 2587+20.34 TO "241A1" 2588+61.54	L+		141.2		1.89
C-23	LOCATION 43	"241A1" 2589+44.61 TO "241A1" 2590+50.93	L+		106.3		1.42
C-23	LOCATION 43	"241A1" 2590+50.93 TO "241A1" 2591+18.50	L+	67.6			0.52
C-24	LOCATION 44	"241A1" 2596+63.72 TO "241A1" 2597+12.41	R+		48.7		0.65
C-24	LOCATION 45	"241NBTOLL2" 2610+91.43 TO "241NBTOLL2" 2611+58.83	R+	67.5			0.52
C-24	LOCATION 45	"241NBTOLL2" 2611+58.83 TO "241NBTOLL2" 2612+13.85	R+		55.0		0.74
C-24	LOCATION 46	"241A1" 2613+33.88 TO "241A1" 2614+01.35	L+		67.5		0.90
C-24	LOCATION 46	"241A1" 2614+01.35 TO "241A1" 2614+68.60	L+	67.5			0.52
C-25	LOCATION 49	"241NB1" 297+90.71 TO "241NB1" 299+08.07	R+		117.2		1.57
C-25	LOCATION 49	"241NB1" 297+90.71 TO "241NB1" 298+30.28	R+			43.6	4.91
C-25	LOCATION 50	"241S133" 67+54.77 TO "241S133" 68+50.68	R+		85.8		1.15
C-25	LOCATION 50	"241S133" 68+50.68 TO "241S133" 69+85.31	R+	135.2			1.04
C-25	LOCATION 50	"241SB1" 320+13.16 TO "241SB1" 326+28.68	L+		615.5		8.23
C-25	LOCATION 50	"241SB1" 326+28.68 TO "241SB1" 327+94.02	L+	165.3			1.27
C-25	LOCATION 50	"241SB1" 328+39.77 TO "241SB1" 328+89.99	L+			66.8	7.52
C-25	LOCATION 51	"241B1" 363+30.78 TO "241B1" 363+98.29	R+	67.5			0.52
C-25	LOCATION 51	"241B1" 363+98.29 TO "241B1" 364+53.28	R+		55.0		0.74
C-26	LOCATION 52	"241B1" 381+35.58 TO "241B1" 382+52.05	R+	116.5			0.90
C-26	LOCATION 52	"241B1" 382+80.45 TO "241B1" 382+90.58	R+		10.1		0.14
C-26	LOCATION 54	"241B1" 409+62.29 TO "241B1" 410+77.57	R+	117.3			0.90
C-26	LOCATION 54	"241B1" 410+77.57 TO "241B1" 410+94.77	R+		17.5		0.23
C-26	LOCATION 55	"241B1" 447+70.73 TO "241B1" 448+63.23	R+		92.5		1.24
C-27	LOCATION 56	"241B1" 464+63.35 TO "241B1" 465+32.57	R+	67.5			0.52
C-27	LOCATION 56	"241B1" 465+32.57 TO "241B1" 465+76.02	R+		42.5		0.57
C-27	LOCATION 58	"241NB1" 1582+43.34 TO "241NB1" 1583+11.98	R+	67.5			0.52
C-27	LOCATION 58	"241NB1" 1582+74.15 TO "241NB1" 1584+69.39	R+			100.6	11.32
C-27	LOCATION 58	"241NB1" 1583+11.98 TO "241NB1" 1584+69.39	R+		155.0		2.07
C-28	LOCATION 62	"241SBTOLL1" 776+93.39 TO "241SBTOLL1" 777+51.40	L+	57.5			0.44
C-28	LOCATION 63	"241A3" 782+09.50 TO "241A3" 782+76.31	R+	67.5			0.52
C-28	LOCATION 63	"241A3" 782+76.31 TO "241A3" 783+18.39	R+		42.5		0.57
C-29	LOCATION 64	"241NBTOLL1" 794+82.79 TO "241NBTOLL1" 795+62.10	R+	80.0			0.62
C-29	LOCATION 64	"241NBTOLL1" 795+62.10 TO "241NBTOLL1" 796+16.70	R+		55.0		0.74
C-29	LOCATION 65	"241NBTOLL1" 799+81.33 TO "241NBTOLL1" 800+48.84	R+	67.5			0.52
C-29	LOCATION 65	"241NBTOLL1" 800+11.69 TO "241NBTOLL1" 801+66.34	R+			113.2	12.73
C-29	LOCATION 65	"241NBTOLL1" 800+48.84 TO "241NBTOLL1" 801+66.34	R+		117.5		1.57
C-29	LOCATION 67	"91ES241" 4918+68.56 TO "91ES241" 4918+81.06	L+	12.5			0.10
C-30	LOCATION 68	"91ES241" 4924+90.11 TO "91ES241" 4925+97.54	L+		105.0		1.40
C-30	LOCATION 68	"91ES241" 4924+95.23 TO "91ES241" 4926+35.70	L+			71.1	8.00
C-30	LOCATION 68	"91ES241" 4925+97.54 TO "91ES241" 4926+66.61	L+	67.5			0.52
C-30	LOCATION 69	"241NE91" 6928+56.31 TO "241NE91" 6930+00.52	L+	144.7			1.11
			SUBTOTAL	1504.1	2884.2	395.3	94.60
			TOTAL FROM SHEET Q-13	983.7	5960.1		87.23
			TOTAL FROM SHEET Q-14	517.1	10213.8		140.49
			TOTAL FROM SHEET Q-15	370.8	29214.6		393.31
			TOTAL FROM SHEET Q-16	1545.3	5189.8		81.25
			GRAND TOTAL	4921.0	53462.5	395.3	796.88

NOTE:

LENGTHS SHOWN ARE BASED ON SURVEY DATA & FIELD MEASUREMENTS. THEY ARE NOT EXACT CALCULATIONS PER STATION LIMITS SHOWN.

SUMMARY OF QUANTITIES

H:\pdata\10106739\CADD\TransPW\Div\Merge\8-24-10\c0G370pa017.dgn
19-OCT-2010 14:09
trmnguye
STATE OF CALIFORNIA - DEPARTMENT OF TRANSPORTATION
Caltrans
CONSULTANT FUNCTIONAL SUPERVISOR: MIKE CHESNEY
CALCULATED-DESIGNED BY: LINDSAY KAUFMANN
CHECKED BY: LINDSAY KAUFMANN
REVISED BY: RK/WT
DATE REVISED: 07/22/10
LAST REVISION: 06-08-10
DATE PLOTTED => 19-OCT-2010
TIME PLOTTED => 14:09
BORDER LAST REVISED 7/2/2010
USERNAME => trmnguye
DGN FILE => c0G370pa017.dgn
RELATIVE BORDER SCALE IS IN INCHES 0 1 2 3
UNIT 2998
PROJECT NUMBER & PHASE 12000001431

Dist	COUNTY	ROUTE	POST MILES TOTAL PROJECT	SHEET No.	TOTAL SHEETS
12	Ora	241	15.5/39.0	59	117

Lindsay M. Kaufmann 09/01/10
REGISTERED CIVIL ENGINEER DATE

10-18-10
PLANS APPROVAL DATE

REGISTERED PROFESSIONAL ENGINEER LINDSAY M. KAUFMANN No. C71806 Exp. 12/31/11 CIVIL STATE OF CALIFORNIA

THE STATE OF CALIFORNIA OR ITS OFFICERS OR AGENTS SHALL NOT BE RESPONSIBLE FOR THE ACCURACY OR COMPLETENESS OF SCANNED COPIES OF THIS PLAN SHEET.

RBF CONSULTING
14725 ALTON PKWY
IRVINE, CA. 92618-2027

NOTE:

LENGTHS SHOWN ARE BASED ON SURVEY DATA & FIELD MEASUREMENTS. THEY ARE NOT EXACT CALCULATIONS PER STATION LIMITS SHOWN.

CONCRETE BARRIER

SHEET No.	DESCRIPTION	STATION	LOCATION	CONCRETE BARRIER (CASE A)	CONCRETE BARRIER (CASE B)	CONCRETE BARRIER (CASE C)	CONCRETE BARRIER (CASE D)
				EA	EA	EA	EA
C-4	MBGR LAYOUT 12E	"241A1" 2086+95.93	R+	1			
C-4	MBGR LAYOUT 12E	"241A1" 2088+21.98	L+	1			
C-4	MBGR LAYOUT 12E	"241A1" 2154+51.50	R+	1			
C-4	MBGR LAYOUT 12E	"241A1" 2157+41.94	L+	1			
C-4	MBGR LAYOUT 12E	"241A1" 2158+08.08	L+	1			
C-4	MBGR LAYOUT 12E	"241A1" 2316+50.52	R+	1			
C-4	MBGR LAYOUT 12E	"241A1" 2332+50.11	L+	1			
C-4	MBGR LAYOUT 12E	"241A1" 2346+69.73	R+	1			
C-4	MBGR LAYOUT 12E	"241A1" 2358+42.16	L+	1			
C-4	MBGR LAYOUT 12E	"241A1" 2485+87.19	R+	1			
C-4	MBGR LAYOUT 12E	"241A1" 2487+85.45	L+	1			
C-4	MBGR LAYOUT 12E	"241A3" 655+09.39	R+	1			
C-4	MBGR LAYOUT 12E	"241A3" 668+28.39	L+	1			
C-4	MBGR LAYOUT 12E	"241A3" 713+53.01	R+	1			
C-4	MBGR LAYOUT 12E	"241A3" 756+34.20	R+	1			
C-4	MBGR LAYOUT 12E	"241A3" 817+51.42	L+	1			
C-4	MBGR LAYOUT 12E	"241NW91" 3931+00.75	L+	1			
C-7	TRANSITION RAILING (TYPE WB)	"241A1" 2086+98.03	R+	1			
C-7	TRANSITION RAILING (TYPE WB)	"241A1" 2088+20.27	L+	1			
C-7	TRANSITION RAILING (TYPE WB)	"241A1" 2154+98.01	R+	1			
C-7	TRANSITION RAILING (TYPE WB)	"241A1" 2157+13.63	L+	1			
C-7	TRANSITION RAILING (TYPE WB)	"241A1" 2242+00.30	L+	1			
C-7	TRANSITION RAILING (TYPE WB)	"241A1" 2260+06.95	R+	1			
C-7	TRANSITION RAILING (TYPE WB)	"241A1" 2262+24.21	L+	1			
C-7	TRANSITION RAILING (TYPE WB)	"241A1" 2316+48.35	R+	1			
C-7	TRANSITION RAILING (TYPE WB)	"241A1" 2346+41.81	R+	1			
C-7	TRANSITION RAILING (TYPE WB)	"241A1" 2358+69.67	L+	1			
C-7	TRANSITION RAILING (TYPE WB)	"241A1" 2393+11.93	R+	1			
C-7	TRANSITION RAILING (TYPE WB)	"241A1" 2396+83.07	L+	1			
C-7	TRANSITION RAILING (TYPE WB)	"241A1" 2419+69.72	R+	1			
C-7	TRANSITION RAILING (TYPE WB)	"241A1" 2422+21.29	L+		1		
C-7	TRANSITION RAILING (TYPE WB)	"241A1" 2426+76.58	R+	1			
C-7	TRANSITION RAILING (TYPE WB)	"241A1" 2428+67.73	L+	1			
C-7	TRANSITION RAILING (TYPE WB)	"241A1" 2443+38.33	R+	1			
C-7	TRANSITION RAILING (TYPE WB)	"241A1" 2446+61.11	L+	1			
C-7	TRANSITION RAILING (TYPE WB)	"241A1" 2485+82.75	R+	1			
C-7	TRANSITION RAILING (TYPE WB)	"241A1" 2485+84.39	R+	1			
C-7	TRANSITION RAILING (TYPE WB)	"241A1" 2485+88.81	R+	1			
C-7	TRANSITION RAILING (TYPE WB)	"241A1" 2487+94.70	L+		1		
C-7	TRANSITION RAILING (TYPE WB)	"241SB1" 280+21.38	L+				1
			SUBTOTAL	37	2		1

CONCRETE BARRIER

SHEET No.	DESCRIPTION	STATION	LOCATION	CONCRETE BARRIER (CASE A)	CONCRETE BARRIER (CASE B)	CONCRETE BARRIER (CASE C)	CONCRETE BARRIER (CASE D)
				EA	EA	EA	EA
C-7	TRANSITION RAILING (TYPE WB)	"241WS133" 94+00.33	L+	1			
C-7	TRANSITION RAILING (TYPE WB)	"241WS133" 110+45.54	R+			1	
C-7	TRANSITION RAILING (TYPE WB)	"241B1" 394+28.91	R+	1			
C-7	TRANSITION RAILING (TYPE WB)	"241B1" 396+09.11	L+	1			
C-7	TRANSITION RAILING (TYPE WB)	"241CH8" 31+50.33	R+	1			
C-7	TRANSITION RAILING (TYPE WB)	"241CH8" 31+71.46	L+	1			
C-7	TRANSITION RAILING (TYPE WB)	"241A3" 655+07.29	R+	1			
C-7	TRANSITION RAILING (TYPE WB)	"241A3" 668+26.29	L+	1			
C-7	TRANSITION RAILING (TYPE WB)	"241A3" 713+44.90	R+	1			
C-7	TRANSITION RAILING (TYPE WB)	"241A3" 716+65.02	L+	1			
C-7	TRANSITION RAILING (TYPE WB)	"241A3" 756+40.21	R+	1			
C-7	TRANSITION RAILING (TYPE WB)	"241A3" 758+56.95	L+	1			
C-7	TRANSITION RAILING (TYPE WB)	"241A3" 815+21.21	R+	1			
C-7	TRANSITION RAILING (TYPE WB)	"241A3" 817+42.13	L+	1			
C-7	TRANSITION RAILING (TYPE WB)	"91WS241" 5923+42.57	R+	1			
C-7	TRANSITION RAILING (TYPE WB)	"91WS241" 5923+70.02	L+	1			
C-7	TRANSITION RAILING (TYPE WB)	"241NW91" 3931+01.31	R+	1			
C-7	TRANSITION RAILING (TYPE WB)	"241NE91" 6931+03.44	R+	1			
C-12	LOCATION 3	"241A1" 2157+77.99	L+	1			
C-15	LOCATION 17	"241A1" 2332+54.77	L+	1			
C-19	LOCATION 32	"241A1" 2487+87.24	L+	1			
C-19	LOCATION 32	"241A1" 2487+94.93	L+	1			
C-22	LOCATION 42	"241NP2" 2571+54.61	L+				1
C-25	LOCATION 48	"241WS133" 96+86.86	R+	1			
C-28	LOCATION 61	"241A3" 716+74.59	L+	1			
C-30	LOCATION 69	"241NE91" 6930+90.13	L+	1			
			SUBTOTAL	24		1	1
			GRAND TOTAL	61	2	1	2

SUMMARY OF QUANTITIES

H:\pdata\10106739\CADD\TransPW\Div\Merge\8-24-10\c0G370pa018.dgn trmnguye 19-OCT-2010 14:10
STATE OF CALIFORNIA - DEPARTMENT OF TRANSPORTATION
Caltrans
CONSULTANT FUNCTIONAL SUPERVISOR: MIKE CHESNEY
CALCULATED-DESIGNED BY: LINDSAY KAUFMANN
CHECKED BY: LINDSAY KAUFMANN
REVISED BY: RK/WT
DATE REVISED: 07/22/10
LAST REVISION 06-08-10 DATE PLOTTED => 19-OCT-2010 TIME PLOTTED => 14:10
BORDER LAST REVISED 7/2/2010
USERNAME => trmnguye
DGN FILE => c0G370pa018.dgn
RELATIVE BORDER SCALE IS IN INCHES 0 1 2 3
UNIT 2998
PROJECT NUMBER & PHASE 12000001431

Dist	COUNTY	ROUTE	POST MILES TOTAL PROJECT	SHEET No.	TOTAL SHEETS
12	Ora	241	15.5/39.0	60	117

Lindsay M. Kaufmann 09/01/10
REGISTERED CIVIL ENGINEER DATE

10-18-10
PLANS APPROVAL DATE

REGISTERED PROFESSIONAL ENGINEER LINDSAY M. KAUFMANN No. C71806 Exp. 12/31/11 CIVIL STATE OF CALIFORNIA

THE STATE OF CALIFORNIA OR ITS OFFICERS OR AGENTS SHALL NOT BE RESPONSIBLE FOR THE ACCURACY OR COMPLETENESS OF SCANNED COPIES OF THIS PLAN SHEET.

RBF CONSULTING
14725 ALTON PKWY
IRVINE, CA. 92618-2027

NOTE:

LENGTHS SHOWN ARE BASED ON SURVEY DATA & FIELD MEASUREMENTS. THEY ARE NOT EXACT CALCULATIONS PER STATION LIMITS SHOWN.

ROADWAY EXCAVATION

SHEET No.	DESCRIPTION	STATION LIMITS	LOCATION	ROADWAY EXCAVATION	EROSION CONTROL (HYDROSEED)
				CY	SQFT
C-5	TERMINAL SYSTEM UPGRADE	"241A1" 2209+65.05 TO "241A1" 2209+65.87	L+	27.1	1462
C-5	TERMINAL SYSTEM UPGRADE	"241A1" 2279+95.95 TO "241A1" 2281+22.28	R+	21.2	1929
C-6	GRADING DETAIL	"241A1" 2125+43.55 TO "241A1" 2125+80.85	R+	11.1	
C-6	GRADING DETAIL	"241NP2" 2562+59.55 TO "241NP2" 2562+96.59	R+	11.1	
C-6	GRADING DETAIL	"241B1" 417+99.61 TO "241B1" 418+36.28	R+	2.1	
C-6	GRADING DETAIL	"241B1" 482+54.63 TO "241B1" 482+92.77	R+	30.0	1001
C-6	GRADING DETAIL	"241SBR1" 2626+59.23 TO "261B241" 2809+58.01	L+	3.3	133
C-6	GRADING DETAIL	"261B241" 2817+70.85 TO "261B241" 2818+08.14	R+	10.4	763
C-6	GRADING DETAIL	"261B241" 2818+87.56 TO "261B241" 2819+24.84	R+	7.4	
C-6	GRADING DETAIL	"261B241" 2835+28.95 TO "261B241" 2835+66.19	L+	11.5	608
C-26	LOCATION 52	"241B1" 380+98.50 TO "241B1" 382+35.09	R+	459.0	8968
			TOTAL	549.2	14864

FIBER ROLLS

SHEET No.	DESCRIPTION	STATION LIMITS	LOCATION	FIBER ROLLS
				LF
C-27	LOCATION 59	"241NBR1" 1605+26.15 TO "241NBR1" 1605+71.58	R+	43
			TOTAL	43

REMOVE ASPHALT CONCRETE

SHEET No.	DESCRIPTION	STATION LIMITS	LOCATION	REMOVE AC
				SQYD
C-12	LOCATION 3	"241A1" 2159+13.26 TO "241A1" 2159+50.62	L+	5.7
C-13	LOCATION 9	"241A1" 2223+59.85 TO "241A1" 2225+22.35	R+	8.2
C-19	LOCATION 27	"241A1" 2464+93.00 TO "241A1" 2467+71.80	L+	125.9
C-22	LOCATION 42	"241NP2" 2569+74.93 TO "241NP2" 2571+48.39	L+	8.9
C-23	LOCATION 43	"241A1" 2574+94.04 TO "241A1" 2575+48.10	L+	2.8
C-23	LOCATION 43	"241A1" 2578+60.96 TO "241A1" 2579+40.67	L+	4.1
C-23	LOCATION 43	"241A1" 2585+59.25 TO "241A1" 2587+20.34	L+	8.2
C-23	LOCATION 43	"241A1" 2588+61.54 TO "241A1" 2589+44.61	L+	4.2
C-25	LOCATION 50	"241SB1" 327+94.02 TO "241SB1" 328+89.99	L+	130.8
C-26	LOCATION 52	"241B1" 382+52.05 TO "241B1" 382+90.57	R+	2.0
C-27	LOCATION 58	"241NBR1" 1583+11.82 TO "241NBR1" 1584+94.65	R+	100.3
C-29	LOCATION 65	"241NBTOLL1" 800+73.13 TO "241NBTOLL1" 801+78.65	R+	48.2
C-30	LOCATION 68	"241ES91" 4924+93.42 TO "241ES91" 4925+89.86	L+	62.7
			TOTAL	511.9

REMOVE CONCRETE CURB

SHEET No.	DESCRIPTION	STATION LIMITS	LOCATION	REMOVE Conc CURB
				LF
C-25	LOCATION 50	"241SB1" 327+69.14 TO "241SB1" 327+76.78	L+	21.2
			TOTAL	21.2

SUMMARY OF QUANTITIES

H:\pdata\10106739\CADD\TransPW\Div\Merge\8-24-10\c0G370pa019.dgn 19-OCT-2010 14:53 trpierce
STATE OF CALIFORNIA - DEPARTMENT OF TRANSPORTATION
Caltrans
CONSULTANT FUNCTIONAL SUPERVISOR MIKE CHESNEY
CALCULATED-DESIGNED BY LINDSAY KAUFMANN RK/WT
CHECKED BY LINDSAY KAUFMANN 07/22/10
REVISED BY DATE REVISED
LAST REVISION 06-08-10 DATE PLOTTED => 19-OCT-2010 TIME PLOTTED => 14:53
BORDER LAST REVISED 7/2/2010
USERNAME => trpierce
DGN FILE => c0G370pa019.dgn
RELATIVE BORDER SCALE IS IN INCHES 0 1 2 3
UNIT 2998
PROJECT NUMBER & PHASE 12000001431

Dist	COUNTY	ROUTE	POST MILES TOTAL PROJECT	SHEET No.	TOTAL SHEETS
12	Ora	241	15.5/39.0	61	117

Lindsay M. Kaufmann 09/01/10
REGISTERED CIVIL ENGINEER DATE

10-18-10
PLANS APPROVAL DATE

REGISTERED PROFESSIONAL ENGINEER LINDSAY M. KAUFMANN No. C71806 Exp. 12/31/11 CIVIL STATE OF CALIFORNIA

THE STATE OF CALIFORNIA OR ITS OFFICERS OR AGENTS SHALL NOT BE RESPONSIBLE FOR THE ACCURACY OR COMPLETENESS OF SCANNED COPIES OF THIS PLAN SHEET.

RBF CONSULTING
14725 ALTON PKWY
IRVINE, CA. 92618-2027

GUARD RAILING DELINEATORS

SHEET No.	DESCRIPTION	STATION LIMITS	LOCATION	GUARD RAILING DELINEATOR (TYPE F) EA	GUARD RAILING DELINEATOR (TYPE G) EA
C-1	NOTCH BLOCK REPLACEMENT	"241A1" 2052+12.17 TO "241A1" 2068+00.55	R†	64	
C-1	NOTCH BLOCK REPLACEMENT	"241A1" 2064+92.30 TO "241A1" 2065+29.61	L†	3	
C-1	NOTCH BLOCK REPLACEMENT	"241A1" 2077+50.47 TO "241A1" 2086+99.46	L†	39	
C-1	NOTCH BLOCK REPLACEMENT	"241A1" 2086+61.66 TO "241A1" 2086+67.91	R†	2	
C-1	NOTCH BLOCK REPLACEMENT	"241A1" 2088+50.40 TO "241A1" 2088+56.95	L†	2	
C-1	NOTCH BLOCK REPLACEMENT	"241A1" 2090+68.25 TO "241A1" 2103+38.93	L†	53	
C-1	NOTCH BLOCK REPLACEMENT	"241A1" 2095+44.48 TO "241A1" 2096+11.18	R†	4	
C-1	NOTCH BLOCK REPLACEMENT	"241A1" 2105+75.48 TO "241A1" 2111+30.24	L†	24	
C-1	NOTCH BLOCK REPLACEMENT	"241A1" 2105+79.87 TO "241A1" 2109+22.57	R†	15	
C-1	NOTCH BLOCK REPLACEMENT	"241A1" 2113+98.62 TO "241A1" 2115+08.29	R†	6	
C-1	NOTCH BLOCK REPLACEMENT	"241A1" 2129+00.09 TO "241A1" 2131+12.55	L†	10	
C-1	NOTCH BLOCK REPLACEMENT	"241A1" 2137+25.18 TO "241A1" 2138+87.56	L†	8	
C-1	NOTCH BLOCK REPLACEMENT	"241A1" 2143+09.24 TO "241A1" 2144+07.77	R†	5	
C-1	NOTCH BLOCK REPLACEMENT	"241A1" 2146+96.55 TO "241A1" 2148+44.89	R†	8	
C-1	NOTCH BLOCK REPLACEMENT	"241A1" 2147+82.94 TO "241A1" 2152+83.24	L†	21	
C-1	NOTCH BLOCK REPLACEMENT	"241A1" 2154+01.78 TO "241A1" 2154+68.61	R†	4	
C-1	NOTCH BLOCK REPLACEMENT	"241A1" 2157+45.43 TO "241A1" 2158+07.64	L†	4	
C-1	NOTCH BLOCK REPLACEMENT	"241A1" 2159+47.01 TO "241A1" 2163+34.44	R†	18	
C-1	NOTCH BLOCK REPLACEMENT	"241A1" 2175+74.57 TO "241A1" 2176+34.60	R†		4
C-1	NOTCH BLOCK REPLACEMENT	"241A1" 2175+81.35 TO "241A1" 2176+29.11	R†	3	
C-1	NOTCH BLOCK REPLACEMENT	"241A1" 2176+82.00 TO "241A1" 2177+84.43	L†	5	
C-1	NOTCH BLOCK REPLACEMENT	"241A1" 2176+82.22 TO "241A1" 2177+84.73	L†		5
C-1	NOTCH BLOCK REPLACEMENT	"241A1" 2186+91.03 TO "241A1" 2187+29.55	L†	3	
C-1	NOTCH BLOCK REPLACEMENT	"241A1" 2192+31.36 TO "241A1" 2192+56.05	R†	2	
C-1	NOTCH BLOCK REPLACEMENT	"241A1" 2196+87.69 TO "241A1" 2197+25.29	L†	3	
C-1	NOTCH BLOCK REPLACEMENT	"241A1" 2206+18.32 TO "241A1" 2206+55.71	R†	3	
C-1	NOTCH BLOCK REPLACEMENT	"241A1" 2209+10.85 TO "241A1" 2209+30.90	L†		4
C-1	NOTCH BLOCK REPLACEMENT	"241A1" 2209+16.86 TO "241A1" 2209+34.12	L†		6
C-1	NOTCH BLOCK REPLACEMENT	"241A1" 2209+65.05 TO "241A1" 2209+68.38	L†	3	
C-1	NOTCH BLOCK REPLACEMENT	"241A1" 2213+67.35 TO "241A1" 2214+04.58	R†	3	
C-1	NOTCH BLOCK REPLACEMENT	"241A1" 2213+70.75 TO "241A1" 2217+44.22	R†		3
C-1	NOTCH BLOCK REPLACEMENT	"241A1" 2218+92.86 TO "241A1" 2219+30.33	L†	3	
C-1	NOTCH BLOCK REPLACEMENT	"241A1" 2242+19.25 TO "241A1" 2246+98.57	R†	21	
C-1	NOTCH BLOCK REPLACEMENT	"241A1" 2242+31.48 TO "241A1" 2245+85.08	L†	15	
C-1	NOTCH BLOCK REPLACEMENT	"241A1" 2280+68.84 TO "241A1" 2281+06.80	R†	3	
C-1	NOTCH BLOCK REPLACEMENT	"241A1" 2297+09.03 TO "241A1" 2299+96.23	R†		13
C-1	NOTCH BLOCK REPLACEMENT	"241A1" 2300+61.98 TO "241A1" 2301+73.97	L†		6
C-1	NOTCH BLOCK REPLACEMENT	"241A1" 2304+13.57 TO "241A1" 2305+25.49	L†		6
C-1	NOTCH BLOCK REPLACEMENT	"241A1" 2308+96.61 TO "241A1" 2316+50.17	L†	32	
			SUBTOTAL	389	47

NOTE:

LENGTHS SHOWN ARE BASED ON SURVEY DATA & FIELD MEASUREMENTS. THEY ARE NOT EXACT CALCULATIONS PER STATION LIMITS SHOWN.

GUARD RAILING DELINEATORS

SHEET No.	DESCRIPTION	STATION LIMITS	LOCATION	GUARD RAILING DELINEATOR (TYPE F) EA	GUARD RAILING DELINEATOR (TYPE G) EA
C-1	NOTCH BLOCK REPLACEMENT	"241A1" 2315+86.12 TO "241A1" 2316+17.58	R†	3	
C-1	NOTCH BLOCK REPLACEMENT	"241A1" 2345+33.95 TO "241A1" 2345+72.16	L†	3	
C-1	NOTCH BLOCK REPLACEMENT	"241A1" 2345+94.43 TO "241A1" 2346+12.29	R†	2	
C-1	NOTCH BLOCK REPLACEMENT	"241A1" 2359+00.34 TO "241A1" 2361+29.58	L†	11	
C-1	NOTCH BLOCK REPLACEMENT	"241A1" 2372+86.77 TO "241A1" 2373+13.50	R†	3	
C-1	NOTCH BLOCK REPLACEMENT	"241A1" 2391+70.90 TO "241A1" 2391+97.18	R†	3	
C-1	NOTCH BLOCK REPLACEMENT	"241A1" 2391+74.73 TO "241A1" 2392+00.49	R†		3
C-1	NOTCH BLOCK REPLACEMENT	"241A1" 2410+02.18 TO "241A1" 2410+64.44	L†	4	
C-1	NOTCH BLOCK REPLACEMENT	"241A1" 2414+84.90 TO "241A1" 2417+23.37	R†	11	
C-1	NOTCH BLOCK REPLACEMENT	"241A1" 2442+40.11 TO "241A1" 2444+21.15	L†	9	
C-1	NOTCH BLOCK REPLACEMENT	"241A1" 2446+91.24 TO "241A1" 2452+19.75	L†	23	
C-1	NOTCH BLOCK REPLACEMENT	"241A1" 2465+62.36 TO "241A1" 2468+38.86	L†	13	
C-1	NOTCH BLOCK REPLACEMENT	"241A1" 2471+09.89 TO "241A1" 2476+71.43	L†	25	
C-1	NOTCH BLOCK REPLACEMENT	"241A1" 2474+99.99 TO "241A1" 2475+24.93	R†	2	
C-1	NOTCH BLOCK REPLACEMENT	"241A1" 2476+78.55 TO "241A1" 2477+15.64	R†	3	
C-2	NOTCH BLOCK REPLACEMENT	"241A1" 2479+77.17 TO "241A1" 2482+43.81	R†	13	
C-2	NOTCH BLOCK REPLACEMENT	"241A1" 2481+73.87 TO "241A1" 2481+98.55	L†	3	
C-2	NOTCH BLOCK REPLACEMENT	"241A1" 2485+23.14 TO "241A1" 2485+53.42	R†		3
C-2	NOTCH BLOCK REPLACEMENT	"241A1" 2485+28.95 TO "241A1" 2485+59.21	R†	3	
C-2	NOTCH BLOCK REPLACEMENT	"241A1" 2485+49.27 TO "241A1" 2485+55.17	R†	2	
C-2	NOTCH BLOCK REPLACEMENT	"241A1" 2488+25.65 TO "241A1" 2489+96.93	L†	8	
C-2	NOTCH BLOCK REPLACEMENT	"241A1" 2509+14.99 TO "241A1" 2511+27.07	L†	10	
C-2	NOTCH BLOCK REPLACEMENT	"241A1" 2509+86.89 TO "241A1" 2511+61.62	R†	8	
C-2	NOTCH BLOCK REPLACEMENT	"241A1" 2518+53.52 TO "241A1" 2523+90.80	L†	23	
C-2	NOTCH BLOCK REPLACEMENT	"241A1" 2527+78.41 TO "241A1" 2529+40.82	L†	8	
C-2	NOTCH BLOCK REPLACEMENT	"241A1" 2537+07.08 TO "241A1" 2537+56.98	R†	3	
C-2	NOTCH BLOCK REPLACEMENT	"241A1" 2537+78.97 TO "241A1" 2538+16.24	L†	3	
C-2	NOTCH BLOCK REPLACEMENT	"241A1" 2542+16.15 TO "241A1" 2544+64.93	R†	12	
C-2	NOTCH BLOCK REPLACEMENT	"241A1" 2547+23.82 TO "241A1" 2553+14.81	L†	25	
C-2	NOTCH BLOCK REPLACEMENT	"241A1" 2548+59.07 TO "241A1" 2548+96.46	R†		3
C-2	NOTCH BLOCK REPLACEMENT	"241A1" 2556+11.18 TO "241A1" 2556+49.74	L†		3
C-2	NOTCH BLOCK REPLACEMENT	"241A1" 2557+28.41 TO "241A1" 2558+10.36	R†	5	
			SUBTOTAL	241	12
			SHEET TOTAL	630	59

SUMMARY OF QUANTITIES

H:\pdata\10106739\CADD\TransPW\Div\Merge\8-24-10\c0G370pa020.dgn
STATE OF CALIFORNIA - DEPARTMENT OF TRANSPORTATION
Caltrans
CONSULTANT FUNCTIONAL SUPERVISOR MIKE CHESNEY
CALCULATED-DESIGNED BY LINDSAY KAUFMANN
CHECKED BY LINDSAY KAUFMANN
REVISED BY RK/WT
DATE REVISED 07/22/10
19-OCT-2010 14:53
trpierce
LAST REVISION 06-08-10
DATE PLOTTED => 19-OCT-2010
TIME PLOTTED => 14:53
BORDER LAST REVISED 7/2/2010
USERNAME => trpierce
DGN FILE => c0G370pa020.dgn
RELATIVE BORDER SCALE IS IN INCHES 0 1 2 3
UNIT 2998
PROJECT NUMBER & PHASE 12000001431

Dist	COUNTY	ROUTE	POST MILES TOTAL PROJECT	SHEET No.	TOTAL SHEETS
12	Ora	241	15.5/39.0	62	117

Lindsay M. Kaufmann 09/01/10
REGISTERED CIVIL ENGINEER DATE

10-18-10
PLANS APPROVAL DATE

REGISTERED PROFESSIONAL ENGINEER LINDSAY M. KAUFMANN No. C71806 Exp. 12/31/11 CIVIL STATE OF CALIFORNIA

THE STATE OF CALIFORNIA OR ITS OFFICERS OR AGENTS SHALL NOT BE RESPONSIBLE FOR THE ACCURACY OR COMPLETENESS OF SCANNED COPIES OF THIS PLAN SHEET.

RBF CONSULTING
14725 ALTON PKWY
IRVINE, CA. 92618-2027

GUARD RAILING DELINEATORS

SHEET No.	DESCRIPTION	STATION LIMITS	LOCATION	GUARD RAILING DELINEATOR (TYPE F) EA	GUARD RAILING DELINEATOR (TYPE G) EA
C-2	NOTCH BLOCK REPLACEMENT	"241NP2" 2562+96.59 TO "241NP2" 2563+83.80	R†	5	
C-2	NOTCH BLOCK REPLACEMENT	"241A1" 2568+71.37 TO "241A1" 2569+70.84	R†	5	
C-2	NOTCH BLOCK REPLACEMENT	"241NP2" 2576+54.55 TO "241NP2" 2576+92.02	R†	3	
C-2	NOTCH BLOCK REPLACEMENT	"241A1" 2592+07.77 TO "241A1" 2593+56.28	L†	8	
C-2	NOTCH BLOCK REPLACEMENT	"241A1" 2596+02.41 TO "241A1" 2596+94.90	R†	5	
C-2	NOTCH BLOCK REPLACEMENT	"241A1" 2613+63.88 TO "241A1" 2614+01.35	L†	3	
C-2	NOTCH BLOCK REPLACEMENT	"241A1" 2620+46.62 TO "241NB1" 270+84.64	R†	51	
C-2	NOTCH BLOCK REPLACEMENT	"241SBTOLL2" 2621+48.72 TO "241SB1" 273+30.43	L†	56	
C-2	NOTCH BLOCK REPLACEMENT	"241NB1" 277+06.01 TO "241NB1" 277+44.18	R†	3	
C-2	NOTCH BLOCK REPLACEMENT	"241SB1" 279+19.05 TO "241SB1" 282+54.02	L†	15	
C-2	NOTCH BLOCK REPLACEMENT	"241SB1" 288+47.08 TO "241SB1" 288+84.46	L†	3	
C-2	NOTCH BLOCK REPLACEMENT	"241WS133" 87+39.31 TO "241WS133" 93+70.21	L†		27
C-2	NOTCH BLOCK REPLACEMENT	"241SB1" 288+41.51 TO "133NE241" 89+22.34	L†	4	
C-2	NOTCH BLOCK REPLACEMENT	"133NE241" 94+08.36 TO "133NE241" 99+43.93	L†	22	
C-2	NOTCH BLOCK REPLACEMENT	"133NE241" 97+01.16 TO "133NE241" 99+67.32	R†		12
C-2	NOTCH BLOCK REPLACEMENT	"241NB1" 305+72.61 TO "241NB1" 307+49.85	R†	8	
C-2	NOTCH BLOCK REPLACEMENT	"241WS133" 105+65.09 TO "241WS133" 110+16.44	R†		20
C-2	NOTCH BLOCK REPLACEMENT	"241SB1" 305+87.56 TO "241SB1" 311+97.37	L†	26	
C-2	NOTCH BLOCK REPLACEMENT	"241SB1" 314+51.57 TO "241SB1" 317+35.32	L†	13	
C-2	NOTCH BLOCK REPLACEMENT	"241S133" 68+37.76 TO "241S133" 69+39.89	L†	6	
C-2	NOTCH BLOCK REPLACEMENT	"241NB1" 327+91.12 TO "241NB1" 329+95.08	R†	10	
C-2	NOTCH BLOCK REPLACEMENT	"241S133" 71+10.96 TO "241SB1" 347+18.07	L†	70	
C-2	NOTCH BLOCK REPLACEMENT	"133N241" 9334+56.97 TO "241B1" 352+36.07	R†	79	
C-2	NOTCH BLOCK REPLACEMENT	"241SB1" 334+32.90 TO "241SB1" 334+70.40	L†		3
C-2	NOTCH BLOCK REPLACEMENT	"241B1" 374+85.19 TO "241B1" 375+55.73	R†	4	
C-2	NOTCH BLOCK REPLACEMENT	"241B1" 382+11.60 TO "241B1" 382+49.16	L†	3	
C-2	NOTCH BLOCK REPLACEMENT	"241B1" 382+90.64 TO "241B1" 393+98.79	R†	46	
C-2	NOTCH BLOCK REPLACEMENT	"241B1" 396+39.43 TO "241B1" 396+45.03	L†	2	
C-2	NOTCH BLOCK REPLACEMENT	"241B1" 398+23.40 TO "241B1" 402+54.93	R†	19	
C-2	NOTCH BLOCK REPLACEMENT	"241B1" 418+36.28 TO "241B1" 430+04.25	R†	49	
C-2	NOTCH BLOCK REPLACEMENT	"241B1" 435+92.05 TO "241B1" 436+29.97	L†	3	
C-2	NOTCH BLOCK REPLACEMENT	"241B1" 438+07.07 TO "241B1" 447+83.23	R†	41	
C-2	NOTCH BLOCK REPLACEMENT	"241B1" 496+37.50 TO "241B1" 504+06.25	R†	32	
C-2	NOTCH BLOCK REPLACEMENT	"241B1" 504+92.02 TO "241B1" 516+01.02	R†	47	
C-2	NOTCH BLOCK REPLACEMENT	"241B1" 519+03.46 TO "241B1" 519+40.16	R†	3	
C-2	NOTCH BLOCK REPLACEMENT	"241A2" 529+81.04 TO "241A2" 535+09.84	R†	23	
C-2	NOTCH BLOCK REPLACEMENT	"241A2" 557+93.30 TO "241A2" 558+30.70	R†	3	
C-2	NOTCH BLOCK REPLACEMENT	"241A2" 568+04.75 TO "241NBR1" 1572+16.39	R†		18
C-2	NOTCH BLOCK REPLACEMENT	"241SBR1" 2576+00.28 TO "241SBR1" 2581+61.81	L†	24	
C-2	NOTCH BLOCK REPLACEMENT	"241NBR1" 1589+39.28 TO "241NBR1" 1591+16.91	R†		8
C-2	NOTCH BLOCK REPLACEMENT	"241SBR1" 2584+87.70 TO "241SBR1" 2593+61.19	L†	42	
C-2	NOTCH BLOCK REPLACEMENT	"241SBR1" 2592+41.42 TO "241SBR1" 2593+92.29	L†		8
C-2	NOTCH BLOCK REPLACEMENT	"241SBR1" 2593+45.73 TO "241SBR1" 2594+50.60	L†	6	
C-2	NOTCH BLOCK REPLACEMENT	"241CH8" 30+48.30 TO "241CH8" 31+20.20	R†	6	
C-2	NOTCH BLOCK REPLACEMENT	"241CH8" 37+83.00 TO "241CH8" 41+86.40	R†	18	
C-2	NOTCH BLOCK REPLACEMENT	"241CH8" 37+83.65 TO "241CH8" 47+46.22	L†		40
C-2	NOTCH BLOCK REPLACEMENT	"241NBR1" 1597+72.40 TO "241NBR1" 1599+18.22	R†	7	
C-2	NOTCH BLOCK REPLACEMENT	"241SBR1" 2598+96.97 TO "241SBR1" 2604+63.70	L†	24	
C-2	NOTCH BLOCK REPLACEMENT	"241NBR1" 1603+83.06 TO "241NBR1" 1607+51.20	R†	16	
			SUBTOTAL	813	136

NOTE:

LENGTHS SHOWN ARE BASED ON SURVEY DATA & FIELD MEASUREMENTS. THEY ARE NOT EXACT CALCULATIONS PER STATION LIMITS SHOWN.

GUARD RAILING DELINEATORS

SHEET No.	DESCRIPTION	STATION LIMITS	LOCATION	GUARD RAILING DELINEATOR (TYPE F) EA	GUARD RAILING DELINEATOR (TYPE G) EA
C-2	NOTCH BLOCK REPLACEMENT	"241CH7" 34+95.69 TO "241CH7" 46+57.82	L†	47	
C-2	NOTCH BLOCK REPLACEMENT	"241CH7" 35+08.72 TO "241CH7" 39+49.49	R†		19
C-2	NOTCH BLOCK REPLACEMENT	"241CH7" 610+61.66 TO "241CH7" 614+00.05	L†	15	
C-2	NOTCH BLOCK REPLACEMENT	"241SBR1" 2626+21.53 TO "241SBR1" 2626+59.23	L†	3	
C-2	NOTCH BLOCK REPLACEMENT	"261B241" 2812+63.52 TO "261B241" 2813+50.97	R†	5	
C-2	NOTCH BLOCK REPLACEMENT	"261B241" 2818+08.14 TO "261B241" 2818+91.38	R†	5	
C-2	NOTCH BLOCK REPLACEMENT	"261B241" 2819+24.84 TO "261B241" 2826+49.76	R†	30	
C-2	NOTCH BLOCK REPLACEMENT	"261B241" 2834+91.34 TO "261B241" 2835+28.95	L†	3	
C-2	NOTCH BLOCK REPLACEMENT	"241A3" 652+84.08 TO "241A3" 654+77.17	R†	9	
C-2	NOTCH BLOCK REPLACEMENT	"241A3" 653+74.22 TO "241A3" 665+10.65	L†	7	
C-2	NOTCH BLOCK REPLACEMENT	"241A3" 668+28.39 TO "241A3" 672+39.34	R†	18	
C-2	NOTCH BLOCK REPLACEMENT	"241A3" 668+56.41 TO "241A3" 670+29.86	L†	8	
C-2	NOTCH BLOCK REPLACEMENT	"241A3" 677+53.71 TO "241A3" 693+02.49	R†	65	
C-2	NOTCH BLOCK REPLACEMENT	"241A3" 686+03.89 TO "241A3" 713+59.37	L†	112	
C-2	NOTCH BLOCK REPLACEMENT	"241A3" 698+70.74 TO "241A3" 713+47.11	R†	59	
C-2	NOTCH BLOCK REPLACEMENT	"241A3" 716+77.92 TO "241A3" 734+57.77	R†	72	
C-2	NOTCH BLOCK REPLACEMENT	"241A3" 716+94.62 TO "241A3" 756+04.30	L†	157	
C-2	NOTCH BLOCK REPLACEMENT	"241A3" 738+35.34 TO "241A3" 739+07.87	R†	4	
C-2	NOTCH BLOCK REPLACEMENT	"241A3" 742+62.04 TO "241A3" 756+10.46	R†	56	
C-2	NOTCH BLOCK REPLACEMENT	"241A3" 759+02.16 TO "241NBTOLL1" 772+91.49	R†	57	
C-2	NOTCH BLOCK REPLACEMENT	"241SBTOLL1" 773+91.66 TO "241SBTOLL1" 776+93.38	L†	13	
C-2	NOTCH BLOCK REPLACEMENT	"241A3" 780+27.88 TO "241A3" 780+65.09	R†	3	
C-2	NOTCH BLOCK REPLACEMENT	"241A3" 782+26.53 TO "241A3" 782+64.25	L†	3	
C-2	NOTCH BLOCK REPLACEMENT	"241A3" 813+03.06 TO "241A3" 815+28.19	L†	11	
C-2	NOTCH BLOCK REPLACEMENT	"241A3" 814+49.31 TO "241A3" 814+91.31	R†	3	
C-2	NOTCH BLOCK REPLACEMENT	"241A3" 817+44.45 TO "241A3" 852+07.15	R†	139	
C-2	NOTCH BLOCK REPLACEMENT	"241A3" 817+72.25 TO "241A3" 821+16.52	L†	15	
C-2	NOTCH BLOCK REPLACEMENT	"241A3" 824+66.47 TO "241A3" 833+38.25	L†	37	
C-2	NOTCH BLOCK REPLACEMENT	"241A3" 844+08.04 TO "241A3" 851+19.18	L†	30	
C-2	NOTCH BLOCK REPLACEMENT	"241A3" 852+21.96 TO "241A3" 857+07.76	R†	21	
C-2	NOTCH BLOCK REPLACEMENT	"241A3" 863+45.26 TO "241A3" 895+29.21	R†	129	
C-2	NOTCH BLOCK REPLACEMENT	"241A3" 865+53.79 TO "241A3" 887+61.65	L†	90	
			SUBTOTAL	1226	19
			SHEET TOTAL	2039	155

SUMMARY OF QUANTITIES

STATE OF CALIFORNIA - DEPARTMENT OF TRANSPORTATION
Caltrans
CONSULTANT FUNCTIONAL SUPERVISOR MIKE CHESNEY
CALCULATED-DESIGNED BY LINDSAY KAUFMANN
CHECKED BY LINDSAY KAUFMANN
REVISED BY RK/WT
DATE REVISED 07/22/10
19-OCT-2010 14:53
trpierce
H:\pdata\10106739\CADD\TransPW\Div\Merge\8-24-10\c0G370pa021.dgn
LAST REVISION 06-08-10
DATE PLOTTED => 19-OCT-2010
TIME PLOTTED => 14:53
BORDER LAST REVISED 7/2/2010
USERNAME => trpierce
DGN FILE => c0G370pa021.dgn
RELATIVE BORDER SCALE IS IN INCHES 0 1 2 3
UNIT 2998
PROJECT NUMBER & PHASE 12000001431

Dist	COUNTY	ROUTE	POST MILES TOTAL PROJECT	SHEET No.	TOTAL SHEETS
12	Ora	241	15.5/39.0	63	117

Lindsay M. Kaufmann 09/01/10
REGISTERED CIVIL ENGINEER DATE

10-18-10
PLANS APPROVAL DATE

REGISTERED PROFESSIONAL ENGINEER LINDSAY M. KAUFMANN No. C71806 Exp. 12/31/11 CIVIL STATE OF CALIFORNIA

THE STATE OF CALIFORNIA OR ITS OFFICERS OR AGENTS SHALL NOT BE RESPONSIBLE FOR THE ACCURACY OR COMPLETENESS OF SCANNED COPIES OF THIS PLAN SHEET.

RBF CONSULTING
14725 ALTON PKWY
IRVINE, CA. 92618-2027

GUARD RAILING DELINEATORS

SHEET No.	DESCRIPTION	STATION LIMITS	LOCATION	GUARD RAILING DELINEATOR (TYPE F)	GUARD RAILING DELINEATOR (TYPE G)
				EA	EA
C-2	NOTCH BLOCK REPLACEMENT	"241A3" 895+35.90 TO "241NW91" 3901+23.52	R†	25	
C-2	NOTCH BLOCK REPLACEMENT	"91WS241" 5900+96.64 TO "91ES241" 4911+44.68	L†	43	
C-3	NOTCH BLOCK REPLACEMENT	"241NE91" 6909+01.76 TO "241NE91" 6914+50.76	R†	23	
C-3	NOTCH BLOCK REPLACEMENT	"241NW91" 3909+07.89 TO "241NW91" 3918+18.84	L†		38
C-3	NOTCH BLOCK REPLACEMENT	"91ES241" 4912+32.06 TO "91ES241" 4918+68.56	L†	27	
C-3	NOTCH BLOCK REPLACEMENT	"91ES241" 4919+43.35 TO "91ES241" 4924+01.26	L†	19	
C-3	NOTCH BLOCK REPLACEMENT	"91ES241" 4920+04.35 TO "91ES241" 4933+74.06	R†		56
C-3	NOTCH BLOCK REPLACEMENT	"91ES241" 4928+49.47 TO "91ES241" 4930+02.66	L†	7	
C-3	NOTCH BLOCK REPLACEMENT	"91WS241" 5913+90.20 TO "91WS241" 5920+92.58	R†		30
C-3	NOTCH BLOCK REPLACEMENT	"91WS241" 5919+24.12 TO "91WS241" 5921+20.54	L†	9	
C-3	NOTCH BLOCK REPLACEMENT	"91WS241" 5923+72.74 TO "91WS241" 5930+55.96	R†		29
C-3	NOTCH BLOCK REPLACEMENT	"91WS241" 5923+99.70 TO "91WS241" 5930+30.00	L†	27	
C-3	NOTCH BLOCK REPLACEMENT	"241NW91" 3923+29.25 TO "241NW91" 3927+79.23	L†		19
C-3	NOTCH BLOCK REPLACEMENT	"241NW91" 3924+51.72 TO "241NW91" 3930+71.65	R†	27	
C-3	NOTCH BLOCK REPLACEMENT	"241NE91" 6918+27.12 TO "241NE91" 6919+80.92	L†		8
C-4	MBGR LAYOUT 12E	"241A1" 2084+72.43 TO "241A1" 2086+90.81	R†		10
C-4	MBGR LAYOUT 12E	"241A1" 2088+27.10 TO "241A1" 2090+45.50	L†		10
C-4	MBGR LAYOUT 12E	"241A1" 2148+82.74 TO "241A1" 2154+46.42	R†		23
C-4	MBGR LAYOUT 12E	"241A1" 2157+47.21 TO "241A1" 2159+61.08	L†		10
C-4	MBGR LAYOUT 12E	"241A1" 2158+13.27 TO "241A1" 2161+72.17	L†		16
C-4	MBGR LAYOUT 12E	"241A1" 2257+03.28 TO "241A1" 2259+95.54	R†		13
C-4	MBGR LAYOUT 12E	"241A1" 2262+20.79 TO "241A1" 2263+52.48	L†		7
C-4	MBGR LAYOUT 12E	"241A1" 2312+32.10 TO "241A1" 2316+45.33	R†		17
C-4	MBGR LAYOUT 12E	"241A1" 2332+55.18 TO "241A1" 2336+35.10	L†		17
C-4	MBGR LAYOUT 12E	"241A1" 2342+48.59 TO "241A1" 2346+64.65	R†		18
C-4	MBGR LAYOUT 12E	"241A1" 2358+47.34 TO "241A1" 2361+29.74	L†		13
C-4	MBGR LAYOUT 12E	"241A1" 2482+89.67 TO "241A1" 2485+82.10	R†		13
C-4	MBGR LAYOUT 12E	"241A1" 2487+90.61 TO "241A1" 2490+09.95	L†		10
C-4	MBGR LAYOUT 12E	"241A3" 651+23.78 TO "241A3" 655+04.26	R†		17
C-4	MBGR LAYOUT 12E	"241A3" 668+33.51 TO "241A3" 671+16.08	L†		13
C-4	MBGR LAYOUT 12E	"241A3" 710+64.74 TO "241A3" 713+47.83	R†		13
C-4	MBGR LAYOUT 12E	"241A3" 752+11.57 TO "241A3" 756+27.98	R†		18
C-4	MBGR LAYOUT 12E	"241A3" 817+56.55 TO "241A3" 821+37.12	L†		17
C-4	MBGR LAYOUT 12E	"241NW91" 3928+38.39 TO "241NW91" 3930+95.61	L†		12
C-5	TERMINAL SYSTEM UPGRADE	"241A1" 2175+38.63 TO "241A1" 2175+74.57	R†		3
C-5	TERMINAL SYSTEM UPGRADE	"241A1" 2175+46.11 TO "241A1" 2175+81.35	R†	3	
C-5	TERMINAL SYSTEM UPGRADE	"241A1" 2187+29.55 TO "241A1" 2187+67.79	L†	3	
C-5	TERMINAL SYSTEM UPGRADE	"241A1" 2197+25.29 TO "241A1" 2197+62.46	L†	3	
C-5	TERMINAL SYSTEM UPGRADE	"241A1" 2205+80.86 TO "241A1" 2206+18.32	R†	3	
C-5	TERMINAL SYSTEM UPGRADE	"241A1" 2209+65.05 TO "241A1" 2209+65.87	L†	3	
C-5	TERMINAL SYSTEM UPGRADE	"241A1" 2213+29.91 TO "241A1" 2213+67.35	R†	3	
C-5	TERMINAL SYSTEM UPGRADE	"241A1" 2219+30.33 TO "241A1" 2219+67.61	L†	3	
C-5	TERMINAL SYSTEM UPGRADE	"241A1" 2245+85.08 TO "241A1" 2246+23.76	L†	3	
C-5	TERMINAL SYSTEM UPGRADE	"241A1" 2280+30.83 TO "241A1" 2280+68.84	R†	3	
C-5	TERMINAL SYSTEM UPGRADE	"241A1" 2296+71.85 TO "241A1" 2297+09.03	R†	3	
C-5	TERMINAL SYSTEM UPGRADE	"241A1" 2301+73.97 TO "241A1" 2302+10.37	L†		3
C-5	TERMINAL SYSTEM UPGRADE	"241A1" 2361+29.58 TO "241A1" 2361+66.74	L†	3	
C-5	TERMINAL SYSTEM UPGRADE	"241A1" 2372+49.54 TO "241A1" 2372+86.77	R†	3	
C-5	TERMINAL SYSTEM UPGRADE	"241A1" 2391+37.76 TO "241A1" 2391+74.73	R†		3
			SUBTOTAL	243	456

NOTE:

LENGTHS SHOWN ARE BASED ON SURVEY DATA & FIELD MEASUREMENTS. THEY ARE NOT EXACT CALCULATIONS PER STATION LIMITS SHOWN.

GUARD RAILING DELINEATORS

SHEET No.	DESCRIPTION	STATION LIMITS	LOCATION	GUARD RAILING DELINEATOR (TYPE F)	GUARD RAILING DELINEATOR (TYPE G)
				EA	EA
C-5	TERMINAL SYSTEM UPGRADE	"241A1" 2397+13.20 TO "241A1" 2397+50.67	L†	3	
C-5	TERMINAL SYSTEM UPGRADE	"241A1" 2410+64.44 TO "241A1" 2411+01.67	L†	3	
C-5	TERMINAL SYSTEM UPGRADE	"241A1" 2414+47.61 TO "241A1" 2414+84.90	R†	3	
C-5	TERMINAL SYSTEM UPGRADE	"241A1" 2419+02.08 TO "241A1" 2419+39.60	R†	3	
C-5	TERMINAL SYSTEM UPGRADE	"241A1" 2428+97.85 TO "241A1" 2429+37.48	L†	3	
C-5	TERMINAL SYSTEM UPGRADE	"241A1" 2452+19.75 TO "241A1" 2452+55.99	L†	3	
C-5	TERMINAL SYSTEM UPGRADE	"241A1" 2468+38.86 TO "241A1" 2468+74.76	L†	3	
C-5	TERMINAL SYSTEM UPGRADE	"241A1" 2476+71.43 TO "241A1" 2476+96.34	L†	3	
C-5	TERMINAL SYSTEM UPGRADE	"241A1" 2479+54.41 TO "241A1" 2479+77.17	R†	3	
C-5	TERMINAL SYSTEM UPGRADE	"241A1" 2481+98.55 TO "241A1" 2482+35.93	L†	3	
C-5	TERMINAL SYSTEM UPGRADE	"241A1" 2484+86.52 TO "241A1" 2485+23.14	R†		3
C-5	TERMINAL SYSTEM UPGRADE	"241A1" 2484+92.26 TO "241A1" 2485+28.95	R†	3	
C-5	TERMINAL SYSTEM UPGRADE	"241A1" 2485+13.94 TO "241A1" 2485+49.27	R†	3	
C-5	TERMINAL SYSTEM UPGRADE	"241A1" 2529+40.82 TO "241A1" 2529+78.11	L†	3	
C-5	TERMINAL SYSTEM UPGRADE	"241A1" 2538+16.24 TO "241A1" 2538+53.28	L†	3	
C-5	TERMINAL SYSTEM UPGRADE	"241A1" 2541+78.68 TO "241A1" 2542+16.15	R†	3	
C-5	TERMINAL SYSTEM UPGRADE	"241A1" 2553+14.81 TO "241A1" 2553+50.72	L†	3	
C-5	TERMINAL SYSTEM UPGRADE	"241SB1" 280+51.47 TO "241SB1" 280+89.01	L†		3
C-5	TERMINAL SYSTEM UPGRADE	"241CH8" 31+04.02 TO "241CH8" 31+41.35	L†		3
C-5	TERMINAL SYSTEM UPGRADE	"241A3" 758+87.39 TO "241A3" 759+25.27	L†	3	
C-7	TRANSITION RAILING (TYPE WB)	"241A1" 2086+67.91 TO "241A1" 2086+92.91	R†	2	
C-7	TRANSITION RAILING (TYPE WB)	"241A1" 2088+25.40 TO "241A1" 2088+50.40	L†	2	
C-7	TRANSITION RAILING (TYPE WB)	"241A1" 2154+68.61 TO "241A1" 2154+93.01	R†	2	
C-7	TRANSITION RAILING (TYPE WB)	"241A1" 2157+18.94 TO "241A1" 2157+45.43	L†	2	
C-7	TRANSITION RAILING (TYPE WB)	"241A1" 2227+12.48 TO "241A1" 2227+37.48	R†		2
C-7	TRANSITION RAILING (TYPE WB)	"241A1" 2241+93.14 TO "241A1" 2242+17.18	L†		2
C-7	TRANSITION RAILING (TYPE WB)	"241A1" 2242+05.61 TO "241A1" 2242+31.48	L†	2	
C-7	TRANSITION RAILING (TYPE WB)	"241A1" 2259+77.92 TO "241A1" 2260+02.01	R†	2	
C-7	TRANSITION RAILING (TYPE WB)	"241A1" 2262+29.52 TO "241A1" 2262+55.40	L†	2	
C-7	TRANSITION RAILING (TYPE WB)	"241A1" 2316+17.58 TO "241A1" 2316+43.12	R†	2	
C-7	TRANSITION RAILING (TYPE WB)	"241A1" 2346+12.29 TO "241A1" 2346+36.79	R†	2	
C-7	TRANSITION RAILING (TYPE WB)	"241A1" 2358+74.89 TO "241A1" 2359+00.34	L†	2	
			SUBTOTAL	71	13
			SHEET TOTAL	314	469

SUMMARY OF QUANTITIES

H:\pdata\10106739\CADD\TransPW\Div\Merge\8-24-10\c0G370pa022.dgn
19-OCT-2010 14:54
STATE OF CALIFORNIA - DEPARTMENT OF TRANSPORTATION
Caltrans
CONSULTANT FUNCTIONAL SUPERVISOR: MIKE CHESNEY
CALCULATED-DESIGNED BY: trpierce
CHECKED BY
REVISED BY: RK/WT
DATE REVISED: 07/22/10
LINDSAY KAUFMANN
LINDSAY KAUFMANN
LAST REVISION
DATE PLOTTED => 19-OCT-2010
TIME PLOTTED => 14:54
06-08-10
BORDER LAST REVISED 7/2/2010
USERNAME => trpierce
DGN FILE => c0G370pa022.dgn
RELATIVE BORDER SCALE IS IN INCHES 0 1 2 3
UNIT 2998
PROJECT NUMBER & PHASE 12000001431

Dist	COUNTY	ROUTE	POST MILES TOTAL PROJECT	SHEET No.	TOTAL SHEETS
12	Ora	241	15.5/39.0	64	117

Lindsay M. Kaufmann 09/01/10
REGISTERED CIVIL ENGINEER DATE

10-18-10
PLANS APPROVAL DATE

REGISTERED PROFESSIONAL ENGINEER LINDSAY M. KAUFMANN No. C71806 Exp. 12/31/11 CIVIL STATE OF CALIFORNIA

THE STATE OF CALIFORNIA OR ITS OFFICERS OR AGENTS SHALL NOT BE RESPONSIBLE FOR THE ACCURACY OR COMPLETENESS OF SCANNED COPIES OF THIS PLAN SHEET.

RBF CONSULTING
14725 ALTON PKWY
IRVINE, CA. 92618-2027

GUARD RAILING DELINEATORS

SHEET No.	DESCRIPTION	STATION LIMITS	LOCATION	GUARD RAILING DELINEATOR (TYPE F) EA	GUARD RAILING DELINEATOR (TYPE G) EA
C-7	TRANSITION RAILING (TYPE WB)	"241A1" 2392+81.83 TO "241A1" 2393+06.80	R†	2	
C-7	TRANSITION RAILING (TYPE WB)	"241A1" 2396+88.20 TO "241A1" 2397+01.35	L†	2	
C-7	TRANSITION RAILING (TYPE WB)	"241A1" 2419+45.57 TO "241A1" 2419+64.59	R†	2	
C-7	TRANSITION RAILING (TYPE WB)	"241A1" 2422+26.42 TO "241A1" 2422+51.42	L†	2	
C-7	TRANSITION RAILING (TYPE WB)	"241A1" 2426+46.61 TO "241A1" 2426+71.46	R†	2	
C-7	TRANSITION RAILING (TYPE WB)	"241A1" 2428+72.86 TO "241A1" 2428+97.86	L†	2	
C-7	TRANSITION RAILING (TYPE WB)	"241A1" 2443+08.20 TO "241A1" 2443+33.20	R†	2	
C-7	TRANSITION RAILING (TYPE WB)	"241A1" 2446+66.24 TO "241A1" 2446+91.24	L†	2	
C-7	TRANSITION RAILING (TYPE WB)	"241A1" 2485+53.42 TO "241A1" 2485+77.80	R†		2
C-7	TRANSITION RAILING (TYPE WB)	"241A1" 2485+55.17 TO "241A1" 2485+79.37	R†	2	
C-7	TRANSITION RAILING (TYPE WB)	"241A1" 2485+59.21 TO "241A1" 2485+83.77	R†	2	
C-7	TRANSITION RAILING (TYPE WB)	"241A1" 2487+99.97 TO "241A1" 2488+25.65	L†	2	
C-7	TRANSITION RAILING (TYPE WB)	"241SB1" 280+26.50 TO "241SB1" 280+51.47	L†	2	
C-7	TRANSITION RAILING (TYPE WB)	"241WS133" 93+70.21 TO "241WS133" 93+95.20	L†		2
C-7	TRANSITION RAILING (TYPE WB)	"241WS133" 110+16.44 TO "241WS133" 110+40.54	R†	2	
C-7	TRANSITION RAILING (TYPE WB)	"241B1" 393+98.79 TO "241B1" 394+23.78	R†	2	
C-7	TRANSITION RAILING (TYPE WB)	"241B1" 396+14.28 TO "241B1" 396+39.43	L†	2	
C-7	TRANSITION RAILING (TYPE WB)	"241CH8" 31+20.20 TO "241CH8" 31+45.20	R†	2	
C-7	TRANSITION RAILING (TYPE WB)	"241CH8" 31+41.35 TO "241CH8" 31+66.34	L†		2
C-7	TRANSITION RAILING (TYPE WB)	"241A3" 654+77.17 TO "241A3" 655+02.17	R†	2	
C-7	TRANSITION RAILING (TYPE WB)	"241A3" 668+31.42 TO "241A3" 668+56.41	L†	2	
C-7	TRANSITION RAILING (TYPE WB)	"241A3" 713+14.11 TO "241A3" 713+39.62	R†	2	
C-7	TRANSITION RAILING (TYPE WB)	"241A3" 716+70.06 TO "241A3" 716+94.62	L†	2	
C-7	TRANSITION RAILING (TYPE WB)	"241A3" 756+10.46 TO "241A3" 756+35.15	R†	2	
C-7	TRANSITION RAILING (TYPE WB)	"241A3" 758+62.14 TO "241A3" 758+87.38	L†	2	
C-7	TRANSITION RAILING (TYPE WB)	"241A3" 814+91.31 TO "241A3" 815+16.28	R†	2	
C-7	TRANSITION RAILING (TYPE WB)	"241A3" 817+47.25 TO "241A3" 817+72.25	L†	2	
C-7	TRANSITION RAILING (TYPE WB)	"91WS241" 5923+47.70 TO "91WS241" 5923+72.74	R†		2
C-7	TRANSITION RAILING (TYPE WB)	"91WS241" 5923+75.08 TO "91WS241" 5923+99.71	L†	2	
C-7	TRANSITION RAILING (TYPE WB)	"241NW91" 3930+71.65 TO "241NW91" 3930+96.26	R†	2	
C-7	TRANSITION RAILING (TYPE WB)	"241NE91" 6930+72.96 TO "241NE91" 6930+98.25	R†	2	
C-11	LOCATION 2	"241A1" 2111+30.24 TO "241A1" 2118+70.45	L†	31	
C-12	LOCATION 3	"241A1" 2157+83.23 TO "241A1" 2159+55.00	L†	8	
C-12	LOCATION 4	"241A1" 2169+07.21 TO "241A1" 2170+17.01	R†	6	
C-12	LOCATION 5	"241A1" 2184+68.42 TO "241A1" 2185+51.93	R†	5	
C-13	LOCATION 6	"241A1" 2212+06.32 TO "241A1" 2212+93.82	R†	5	
C-13	LOCATION 7	"241A1" 2213+20.54 TO "241A1" 2213+70.75	R†		3
C-13	LOCATION 8	"241A1" 2218+85.21 TO "241A1" 2219+85.21	R†	5	
C-13	LOCATION 9	"241A1" 2223+22.33 TO "241A1" 2225+22.35	R†	9	
C-13	LOCATION 10	"241A1" 2253+66.85 TO "241A1" 2255+10.67	R†	7	
C-14	LOCATION 11	"241A1" 2262+82.49 TO "241A1" 2263+34.39	L†	3	
C-14	LOCATION 12	"241A1" 2267+37.97 TO "241A1" 2268+25.46	R†	5	
C-14	LOCATION 13	"241A1" 2292+15.31 TO "241A1" 2293+02.83	L†		5
C-14	LOCATION 13	"241A1" 2292+19.42 TO "241A1" 2293+06.92	L†	5	
C-14	LOCATION 14	"241A1" 2299+96.23 TO "241A1" 2300+08.57	R†		2
C-15	LOCATION 15	"241A1" 2304+01.23 TO "241A1" 2304+13.56	L†		2
C-15	LOCATION 15	"241A1" 2305+25.49 TO "241A1" 2310+50.29	L†		22
C-15	LOCATION 16	"241A1" 2312+42.48 TO "241A1" 2312+55.34	R†	2	
			SUBTOTAL	145	42

NOTE:

LENGTHS SHOWN ARE BASED ON SURVEY DATA & FIELD MEASUREMENTS. THEY ARE NOT EXACT CALCULATIONS PER STATION LIMITS SHOWN.

GUARD RAILING DELINEATORS

SHEET No.	DESCRIPTION	STATION LIMITS	LOCATION	GUARD RAILING DELINEATOR (TYPE F) EA	GUARD RAILING DELINEATOR (TYPE G) EA
C-15	LOCATION 17	"241A1" 2332+59.81 TO "241A1" 2336+96.32	L†	19	
C-16	LOCATION 18	"241A1" 2345+72.16 TO "241A1" 2346+23.07	L†	3	
C-16	LOCATION 19	"241A1" 2377+70.92 TO "241A1" 2378+58.43	R†	5	
C-16	LOCATION 20	"241A1" 2377+97.17 TO "241A1" 2378+84.47	L†	5	
C-16	LOCATION 21	"241A1" 2389+46.00 TO "241A1" 2391+70.09	R†	10	
C-17	LOCATION 22	"241A1" 2383+84.96 TO "241A1" 2392+34.96	L†	35	
C-18	LOCATION 23	"241A1" 2403+36.51 TO "241A1" 2404+23.55	R†	5	
C-18	LOCATION 24	"241A1" 2435+94.66 TO "241A1" 2436+80.63	R†	5	
C-18	LOCATION 25	"241A1" 2434+80.21 TO "241A1" 2442+52.61	L†	32	
C-18	LOCATION 26	"241A1" 2457+09.36 TO "241A1" 2458+12.02	R†	5	
C-19	LOCATION 27	"241A1" 2465+94.67 TO "241A1" 2467+22.81	L†	7	
C-19	LOCATION 27	"241A1" 2465+98.23 TO "241A1" 2467+19.65	L†		6
C-19	LOCATION 28	"241A1" 2473+42.40 TO "241A1" 2474+99.99	R†	7	
C-19	LOCATION 29	"241A1" 2474+54.16 TO "241A1" 2476+24.50	R†		8
C-19	LOCATION 30	"241A1" 2479+47.96 TO "241A1" 2480+35.55	L†	5	
C-19	LOCATION 31	"241A1" 2480+20.57 TO "241A1" 2482+40.88	L†		10
C-19	LOCATION 32	"241A1" 2487+92.46 TO "241A1" 2490+17.16	L†	9	
C-19	LOCATION 32	"241A1" 2488+00.17 TO "241A1" 2489+58.54	L†		9
C-20	LOCATION 33	"241A1" 2489+96.93 TO "241A1" 2504+97.96	L†	60	
C-21	LOCATION 34	"241A1" 2503+99.16 TO "241A1" 2505+61.12	R†	8	
C-21	LOCATION 35	"241A1" 2509+49.39 TO "241A1" 2509+86.89	R†	3	
C-21	LOCATION 36	"241A1" 2511+26.86 TO "241A1" 2511+64.77	L†	3	
C-21	LOCATION 37	"241A1" 2516+58.05 TO "241A1" 2517+58.05	R†	5	
C-21	LOCATION 37	"241A1" 2521+30.10 TO "241A1" 2522+30.10	R†	5	
C-21	LOCATION 38	"241A1" 2523+90.80 TO "241A1" 2527+90.91	L†	17	
C-21	LOCATION 39	"241A1" 2527+00.71 TO "241A1" 2528+00.71	R†	5	
C-22	LOCATION 40	"241A1" 2536+57.08 TO "241A1" 2537+07.08	R†	3	
C-22	LOCATION 41	"241A1" 2549+40.80 TO "241A1" 2550+28.30	L†	5	
C-22	LOCATION 42	"241NP2" 2569+37.43 TO "241NP2" 2571+49.51	L†		10
C-23	LOCATION 43	"241A1" 2574+76.18 TO "241A1" 2590+88.43	R†	66	
C-24	LOCATION 44	"241A1" 2596+82.40 TO "241A1" 2597+07.40	R†	2	
C-24	LOCATION 45	"241NBTOLL2" 2611+21.51 TO "241NBTOLL2" 2612+08.79	R†	5	
			SUBTOTAL	339	43
			SHEET TOTAL	484	85

SUMMARY OF QUANTITIES

H:\pdata\10106739\CADD\TransPW\Div\Merge\8-24-10\c0G370pa023.dgn
19-OCT-2010 14:54
STATE OF CALIFORNIA - DEPARTMENT OF TRANSPORTATION
Caltrans
CONSULTANT FUNCTIONAL SUPERVISOR: MIKE CHESNEY
CALCULATED-DESIGNED BY: trpierce
CHECKED BY
REVISED BY: LINDSAY KAUFMANN RK/WT
DATE REVISED: LINDSAY KAUFMANN 07/22/10
LAST REVISION 06-08-10 DATE PLOTTED => 19-OCT-2010 TIME PLOTTED => 14:54
BORDER LAST REVISED 7/2/2010
USERNAME => trpierce
DGN FILE => c0G370pa023.dgn
RELATIVE BORDER SCALE IS IN INCHES 0 1 2 3
UNIT 2998
PROJECT NUMBER & PHASE 12000001431

GUARD RAILING DELINEATORS

SHEET No.	DESCRIPTION	STATION LIMITS	LOCATION	GUARD RAILING DELINEATOR (TYPE F)	GUARD RAILING DELINEATOR (TYPE G)
				EA	EA
C-24	LOCATION 46	"241A1" 2613+38.88 TO "241A1" 2316+76.38	L†	3	
C-24	LOCATION 47	"241SB1" 273+30.43 TO "241SB1" 274+04.80	L†	4	
C-25	LOCATION 48	"241WS133" 95+37.99 TO "241WS133" 96+81.89	R†	7	
C-25	LOCATION 49	"241NB1" 298+15.74 TO "241NB1" 299+02.99	R†	5	
C-25	LOCATION 50	"241S133" 67+59.75 TO "241S133" 69+08.51	R†		9
C-25	LOCATION 50	"241SB1" 320+18.16 TO "241SB1" 328+38.77	L†	34	
C-25	LOCATION 51	"241B1" 363+60.77 TO "241B1" 364+48.29	R†	5	
C-26	LOCATION 52	"241B1" 381+65.58 TO "241B1" 382+90.58	R†	6	
C-26	LOCATION 53	"241B1" 397+12.73 TO "241B1" 398+23.70	R†	6	
C-26	LOCATION 54	"241B1" 409+91.74 TO "241B1" 410+89.86	R†	5	
C-26	LOCATION 55	"241B1" 447+70.73 TO "241B1" 448+58.23	R†	5	
C-27	LOCATION 56	"241B1" 464+94.05 TO "241B1" 465+70.96	R†	4	
C-27	LOCATION 57	"241A2" 539+45.82 TO "241A2" 540+20.84	R†	4	
C-27	LOCATION 58	"241NBR1" 1582+73.81 TO "241NBR1" 1584+64.31	R†	9	
C-28	LOCATION 60	"241CH7" 34+96.29 TO "241CH7" 35+08.72	R†		2
C-28	LOCATION 61	"241A3" 716+79.63 TO "241A3" 720+98.54	L†		18
C-28	LOCATION 62	"241SBTOLL1" 776+93.39 TO "241SBTOLL1" 777+30.97	L†	3	
C-28	LOCATION 63	"241A3" 782+39.23 TO "241A3" 783+13.44	R†	4	
C-29	LOCATION 64	"241NBTOLL1" 795+12.49 TO "241NBTOLL1" 796+11.74	R†	5	
C-29	LOCATION 65	"241NBTOLL1" 800+11.32 TO "241NBTOLL1" 801+61.34	R†	7	
C-29	LOCATION 66	"241SBTOLL1" 803+49.70 TO "241A3" 804+89.88	L†	5	
C-29	LOCATION 67	"91ES241" 4918+68.56 TO "91ES241" 4919+18.56	L†	3	
C-30	LOCATION 68	"91ES241" 4924+95.00 TO "91ES241" 4926+36.05	L†	7	
C-30	LOCATION 69	"241NE91" 6928+86.41 TO "241NE91" 6930+85.02	L†		9
			SUBTOTAL	131	38
			TOTAL FROM SHEET Q-20	630	59
			TOTAL FROM SHEET Q-21	2039	155
			TOTAL FROM SHEET Q-22	314	469
			TOTAL FROM SHEET Q-23	484	85
			GRAND TOTAL	3598	806

NOTE:

LENGTHS SHOWN ARE BASED ON SURVEY DATA & FIELD MEASUREMENTS. THEY ARE NOT EXACT CALCULATIONS PER STATION LIMITS SHOWN.

Dist	COUNTY	ROUTE	POST MILES TOTAL PROJECT	SHEET No.	TOTAL SHEETS
12	Ora	241	15.5/39.0	65	117

Lindsay M. Kaufmann 09/01/10
REGISTERED CIVIL ENGINEER DATE

10-18-10
PLANS APPROVAL DATE

REGISTERED PROFESSIONAL ENGINEER LINDSAY M. KAUFMANN No. C71806 Exp. 12/31/11 CIVIL STATE OF CALIFORNIA

THE STATE OF CALIFORNIA OR ITS OFFICERS OR AGENTS SHALL NOT BE RESPONSIBLE FOR THE ACCURACY OR COMPLETENESS OF SCANNED COPIES OF THIS PLAN SHEET.

RBF CONSULTING
14725 ALTON PKWY
IRVINE, CA. 92618-2027

SUMMARY OF QUANTITIES

Q-24

REVISED BY	DATE REVISED
RK/WT	07/22/10

LINDSAY KAUFMANN	LINDSAY KAUFMANN
CALCULATED-DESIGNED BY	CHECKED BY
MIKE CHESNEY	
CONSULTANT FUNCTIONAL SUPERVISOR	

STATE OF CALIFORNIA - DEPARTMENT OF TRANSPORTATION

Caltrans

H:\pdata\10106739\CADD\TransPW\Div\Merge\8-24-10\c0G370pa024.dgn trstrk 19-OCT-2010 14:42

LAST REVISION 06-08-10 | DATE PLOTTED => 19-OCT-2010 | TIME PLOTTED => 14:42

Dist	COUNTY	ROUTE	POST MILES TOTAL PROJECT	SHEET No.	TOTAL SHEETS
12	Ora	241	15.5/39.0	66	117

Mark J. Esposito 09/01/10
REGISTERED CIVIL ENGINEER DATE

10-18-10
PLANS APPROVAL DATE

REGISTERED PROFESSIONAL ENGINEER MARK J. ESPOSITO No. C69921 Exp. 09-30-12 CIVIL STATE OF CALIFORNIA

THE STATE OF CALIFORNIA OR ITS OFFICERS OR AGENTS SHALL NOT BE RESPONSIBLE FOR THE ACCURACY OR COMPLETENESS OF SCANNED COPIES OF THIS PLAN SHEET.

RBF CONSULTING
14725 ALTON PKWY
IRVINE, CA. 92618-2027

NOTE:

FOR ACCURATE RIGHT OF WAY AND ACCESS DATA, CONTACT RIGHT OF WAY ENGINEERING AT THE DISTRICT OFFICE.

NOTES (THIS SHEET):

1 RELOCATE EXISTING 334 TRAFFIC MONITORING STATION CONTROLLER ASSEMBLY AND CABINET COMPLETE ON NEW FOUNDATION TO LOCATION SHOWN.

2 SPLICE TYPE D FOC TO EXISTING TYPE C FOC INSIDE EXISTING SPLICE VAULT.

LEGEND:

EXISTING SPLICE VAULT

ABBREVIATIONS:

FOC	FIBER OPTIC CABLE
TYPE B FOC	72 SINGLEMODE FIBER OPTIC CABLE
TYPE C FOC	72 SINGLEMODE FIBER OPTIC CABLE
TYPE D FOC	12 SINGLEMODE FIBER OPTIC CABLE
TCA	TRANSPORTATION CORRIDOR AUTHORITY

GENERAL NOTES:

1. THE CONTRACTOR SHALL GIVE 72 HOURS (3 WORKING DAYS) ADVANCE WRITTEN NOTICE TO THE ENGINEER AND ALL CONCERNED AGENCIES, PRIOR TO REMOVING OR MODIFIYING ANY EXISTING ELECTRICAL FACILITIES.
2. ALL FIBER OPTIC CONDUIT BENDS SHALL BE 4 ft RADIUS MINIMUM, AND SHALL BE FACTORY BENDS. ALL OTHER CONDUITS SHALL HAVE A MINIMUM BEND RADIUS OF NO LESS THAN 6 TIMES THE CONDUIT DIAMETER.
3. LOCATE ALL TYPE 334 CABINETS A MINIMUM OF 30' FROM EDGE OF TRAVELED WAY OF THE FREEWAY OR RAMPS, UNLESS PROTECTED BY GUARDRAIL.

CONDUCTOR AND CONDUIT SCHEDULE

CONDUIT	INNERDUCT	CABLE TYPE	1	2	3
4"C (E)	NONE	TCA FOC		1(E)	
4"C (E)	NONE	TCA FOC		1(E)	
4"C (E) W/3-1½" INNERDUCT	#1	TYPE B FOC		1(E)	
	#2	TYPE C FOC		1(E)	
	#3	TCA FOC		1(E)	
4"C (E)	NONE	TCA POWER CONDUCTORS		1(E)	
2-3"C	NONE	TYPE D FOC	1		
		TYPE C DLC	11		
		#6 CONDUCTOR	2		
2"C (E)	NONE	TYPE D FOC			1

ALL CONDUCTORS AND CONDUITS ARE NEW UNLESS OTHERWISE NOTED:
(E) = EXISTING (PROTECT IN PLACE)

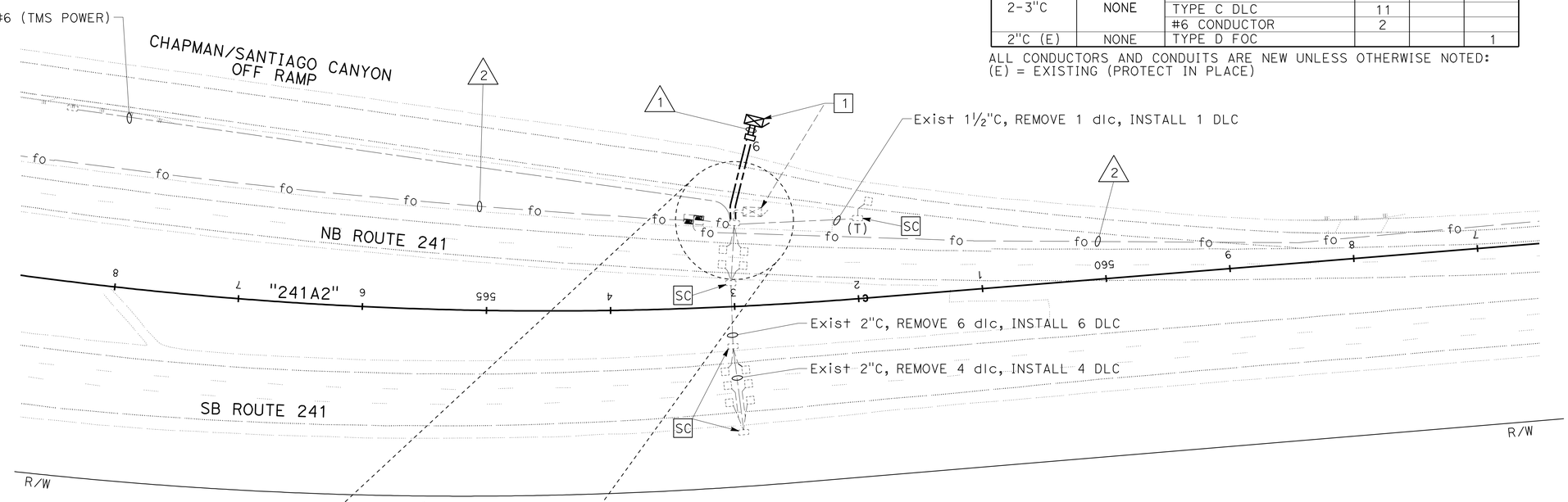

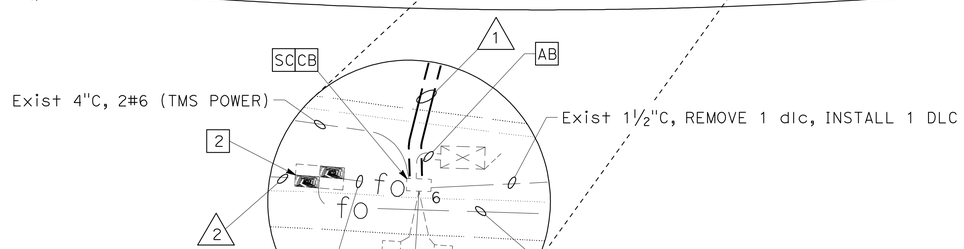

THIS PLAN IS ACCURATE FOR ELECTRICAL WORK ONLY.

MODIFY TRAFFIC MONITORING STATION

SCALE: 1" = 50'

E-1

STATE OF CALIFORNIA - DEPARTMENT OF TRANSPORTATION
Caltrans
CONSULTANT FUNCTIONAL SUPERVISOR: CARLOS A. ORTIZ
CALCULATED-DESIGNED BY: JONATHAN HOFERT
CHECKED BY: MARK J. ESPOSITO
REVISED BY: AS/LK
DATE REVISED: 07/27/10
H:\pdata\10106739\CADD\TransPW\Div\Merge\8-24-10\c0G370ua001.dgn trstrk 19-OCT-2010 14:42

LAST REVISION 06-08-10 | DATE PLOTTED => 19-OCT-2010 | TIME PLOTTED => 14:42

BORDER LAST REVISED 7/2/2010 | USERNAME => trstrk | DGN FILE => c0G370ua001.dgn | RELATIVE BORDER SCALE IS IN INCHES 0 1 2 3 | UNIT 2998 | PROJECT NUMBER & PHASE 12000001431

Dist	COUNTY	ROUTE	POST MILES TOTAL PROJECT	SHEET No.	TOTAL SHEETS
12	Ora	241	15.5/39.0	67	117

REGISTERED CIVIL ENGINEER 09/01/10 DATE

10-18-10
PLANS APPROVAL DATE

REGISTERED PROFESSIONAL ENGINEER MARK J. ESPOSITO No. C69921 Exp. 09-30-12 CIVIL STATE OF CALIFORNIA

THE STATE OF CALIFORNIA OR ITS OFFICERS OR AGENTS SHALL NOT BE RESPONSIBLE FOR THE ACCURACY OR COMPLETENESS OF SCANNED COPIES OF THIS PLAN SHEET.

RBF CONSULTING
14725 ALTON PKWY
IRVINE, CA. 92618-2027

TYPE C CABLE (SR-241 FO MAINLINE)

	FIBER No.	HUB5 NB MAINLINE N/O PORTOLA Pkwy	TMS 6560 NB MAINLINE 2200' N/O PORTOLA Pkwy OC	TMS 6058 NB MAINLINE 2300' N/O PORTOLA Pkwy OC	TMS 6059 SB MAINLINE 1250' S/O TOMATO SPRINGS TOLL PLAZA	TMS 6060 NB MAINLINE AT TOMATO SPRINGS TOLL PLAZA	TMS 6061 SB MAINLINE 2100' N/O TOMATO SPRINGS TOLL PLAZA	TMS 6062 NB MAINLINE 3300' N/O TOMATO SPRINGS TOLL PLAZA	TMS 6063 NB MAINLINE 3200' S/O BEE CANYON Rd	TMS 6064 NB MAINLINE 1400' S/O BEE CANYON Rd	TMS 6065 NB MAINLINE 460' N/O BEE CANYON Rd	TMS 6066 NB MAINLINE 2000' N/O BEE CANYON Rd	TMS 6067 NB MAINLINE 3200' S/O HAUL Rd	TMS 6068 NB MAINLINE 1300' S/O HAUL Rd	TMS 6069 NB MAINLINE 300' N/O HAUL Rd	TMS 6070 NB MAINLINE 1600' N/O HAUL Rd	TMS 6071 NB MAINLINE 1600' S/O SOUTH CULVER Dr	TMS 6072 NB MAINLINE 250' N/O SOUTH CULVER Dr	TMS 6073 NB MAINLINE 2000' N/O SOUTH CULVER Dr	TMS 6074 NB MAINLINE 2000' S/O NORTH CULVER Dr	TMS 6075 NB MAINLINE 130' S/O NORTH CULVER Dr	TMS 6076 NB MAINLINE 600' N/O NORTH CULVER Dr	TMS 6077 NB MAINLINE 3600' N/O NORTH CULVER Dr	TMS 6078 NB MAINLINE 3000' S/O SANTIAGO CANYON Rd OC *	E0244 NB MAINLINE 1300' S/O SANTIAGO CANYON Rd	TMS 6562 NB MAINLINE 750' S/O SANTIAGO CANYON Rd OC	TMS 6079 NB MAINLINE 1600' N/O SANTIAGO CANYON Rd OC	TMS 6563 NB MAINLINE 3000' N/O SANTIAGO CANYON Rd OC	HUB6 N 261 @ SANTIAGO CYN	FIBER No.	REMARKS
TYPE C	1-2	<XX>	<XX>	<XX>	<XX>	<XX>	<XX>	<XX>	<XO>	<OX>	<XX>	<XX>	<XX>	<XX>	<XX>	<XO>														1-2	NOT USED
	3-4									<XO>						<XO>														3-4	E6091 pri
	5-6																<XX>	<XX>	<XX>	<XX>	<XX>	<XO>	<OX>	<XX>	<XX>	<XX>	<XO>			5-6	
	7-8																						<XO>							7-8	NOT USED
	9-10																										<OX>	<XX>	<XX>	9-10	NOT USED
	11-12																					<OX>								11-12	NOT USED
	13-14								<OX>																					13-14	E6096 pri
	15-16																													15-16	TS73-2
	17-27																													17-27	NOT USED
	28-29																													28-29	V6086 pri
	30-72																													30-72	NOT USED

LEGEND:

X - TERMINATED ACTIVE
O - TERMINATED SPARE
< > - ARROW POINTS TO THE DIRECTION OF TRANSMISSION
* - TMS 6078 IS SHOWN ON SHEET E-1

THIS PLAN IS ACCURATE FOR ELECTRICAL WORK ONLY.

MODIFY TRAFFIC MONITORING STATION
(SR-241 TYPE FIBER ASSIGMENTS)

NO SCALE

E-2

H:\pdata\10106739\CADD\TransPW\Div\Merge\8-24-10\c0G370ua002.dgn trstrk 19-OCT-2010 14:42

STATE OF CALIFORNIA - DEPARTMENT OF TRANSPORTATION
Caltrans

CONSULTANT FUNCTIONAL SUPERVISOR: CARLOS A. ORTIZ
CALCULATED-DESIGNED BY: JONATHAN HOFERT
CHECKED BY: MARK J. ESPOSITO
REVISED BY: AS/LK
DATE REVISED: 07/27/10

LAST REVISION DATE PLOTTED => 19-OCT-2010
06-08-10 TIME PLOTTED => 14:42

Dist	COUNTY	ROUTE	POST MILES TOTAL PROJECT	SHEET No.	TOTAL SHEETS
12	Ora	241	15.5/39.0	68	117

Mark J. Esposito 09/01/10
REGISTERED CIVIL ENGINEER DATE

10-18-10
PLANS APPROVAL DATE

REGISTERED PROFESSIONAL ENGINEER
MARK J. ESPOSITO
No. C69921
Exp. 09-30-12
CIVIL
STATE OF CALIFORNIA

THE STATE OF CALIFORNIA OR ITS OFFICERS OR AGENTS SHALL NOT BE RESPONSIBLE FOR THE ACCURACY OR COMPLETENESS OF SCANNED COPIES OF THIS PLAN SHEET.

RBF CONSULTING
14725 ALTON PKWY
IRVINE, CA. 92618-2027

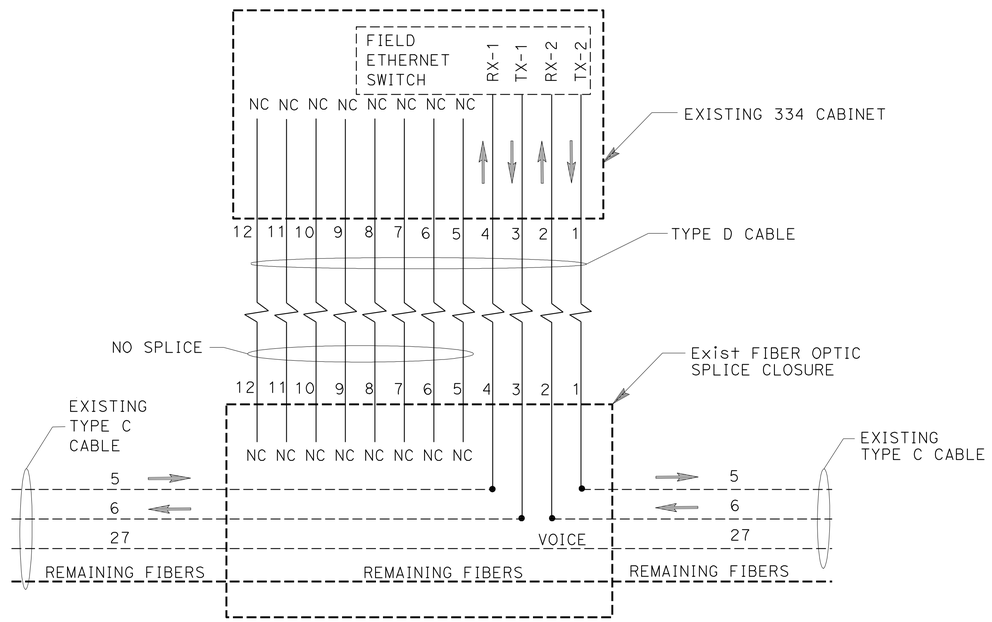

CONNECTION OF TYPE D TO TYPE C TMS

MODIFY TRAFFIC MONITORING STATION

(FIBER OPTIC SPLICING DETAIL TYPE D TO TYPE C)

NO SCALE

E-3

THIS PLAN IS ACCURATE FOR ELECTRICAL WORK ONLY.

REVISED BY	AS/LK
DATE REVISED	07/27/10
JONATHAN HOFERT	
MARK J. ESPOSITO	
CALCULATED-DESIGNED BY	
CHECKED BY	
CONSULTANT FUNCTIONAL SUPERVISOR	CARLOS A. ORTIZ

STATE OF CALIFORNIA - DEPARTMENT OF TRANSPORTATION
Caltrans

trstrk 19-OCT-2010 14:43
H:\pdata\10106739\CADD\TransPW\Div\Merge\8-24-10\c0G370ua003.dgn

LAST REVISION 06-08-10 | DATE PLOTTED => 19-OCT-2010 | TIME PLOTTED => 14:43

BORDER LAST REVISED 7/2/2010 | USERNAME => trstrk | DGN FILE => c0G370ua003.dgn | RELATIVE BORDER SCALE IS IN INCHES 0 1 2 3 | UNIT 2998 | PROJECT NUMBER & PHASE 12000001431

Dist	COUNTY	ROUTE	POST MILES TOTAL PROJECT	SHEET No.	TOTAL SHEETS
12	Ora	241	15.5/39.0	69	117

Mark J. Esposito 09/01/10
REGISTERED CIVIL ENGINEER DATE

10-18-10
PLANS APPROVAL DATE

REGISTERED PROFESSIONAL ENGINEER
MARK J. ESPOSITO
No. C69921
Exp. 09-30-12
CIVIL
STATE OF CALIFORNIA

THE STATE OF CALIFORNIA OR ITS OFFICERS OR AGENTS SHALL NOT BE RESPONSIBLE FOR THE ACCURACY OR COMPLETENESS OF SCANNED COPIES OF THIS PLAN SHEET.

RBF CONSULTING
14725 ALTON PKWY
IRVINE, CA. 92618-2027

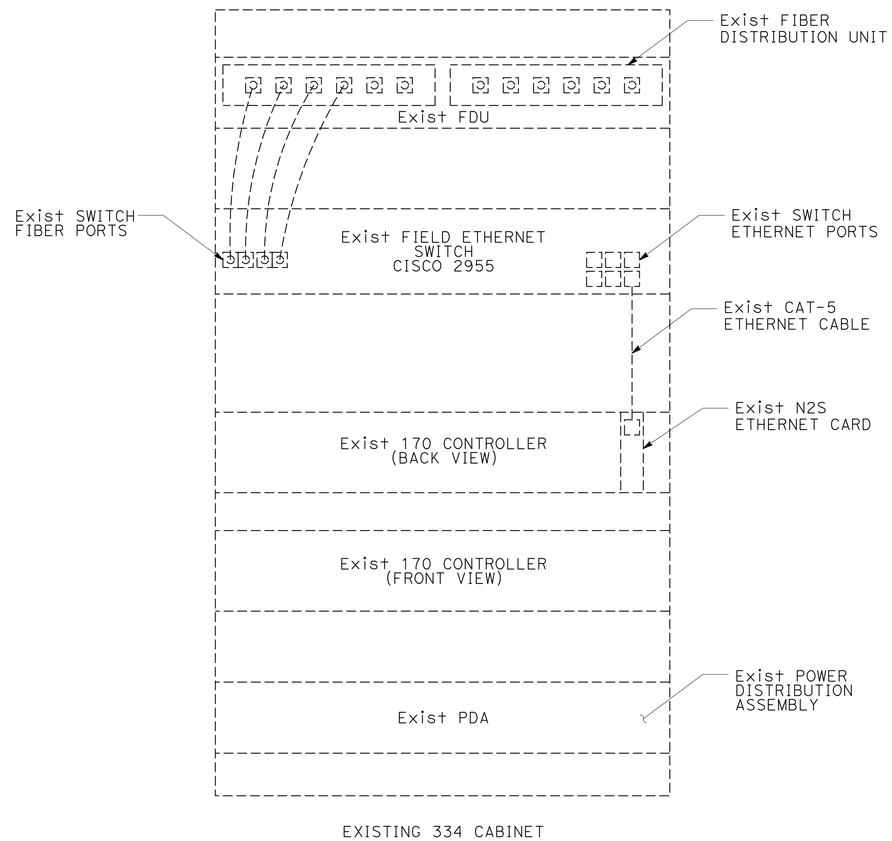

EXISTING EQUIPMENT RACK LAYOUT (FOR INFORMATION ONLY)

THIS PLAN IS ACCURATE FOR ELECTRICAL WORK ONLY.

MODIFY TRAFFIC MONITORING STATION

(CONTROLLER INTERFACE)

NO SCALE

E-4

STATE OF CALIFORNIA - DEPARTMENT OF TRANSPORTATION
Caltrans

CONSULTANT FUNCTIONAL SUPERVISOR: CARLOS A. ORTIZ
CALCULATED-DESIGNED BY: JONATHAN HOFERT
CHECKED BY: MARK J. ESPOSITO
REVISED BY: AS/LK
DATE REVISED: 07/27/10

H:\pdata\10106739\CADD\TransPW\Div\Merge\8-24-10\c0G370ua004.dgn
trstrk 19-OCT-2010 14:43

LAST REVISION 06-08-10 | DATE PLOTTED => 19-OCT-2010 | TIME PLOTTED => 14:43

BORDER LAST REVISED 7/2/2010 | USERNAME => trstrk | DGN FILE => c0G370ua004.dgn | RELATIVE BORDER SCALE IS IN INCHES 0 1 2 3 | UNIT 2998 | PROJECT NUMBER & PHASE 12000001431

DIST	COUNTY	ROUTE	POST MILES TOTAL PROJECT	SHEET NO.	TOTAL SHEETS
12	Ora	241	15.5/39.0	70	117

Randell D. Hiatt
REGISTERED CIVIL ENGINEER

June 6, 2008
PLANS APPROVAL DATE

REGISTERED PROFESSIONAL ENGINEER
Randell D. Hiatt
No. C50200
Exp. 6-30-09
CIVIL
STATE OF CALIFORNIA

The State of California or its officers or agents shall not be responsible for the accuracy or completeness of electronic copies of this plan sheet.

To accompany plans dated 10-18-10

NOTES:

1. When necessary to place dike in front of face of guard railing, only Type C dike may be used. For dike details, see Standard Plan A87B.
2. For standard railing post embedment, see Standard Plans A77C3.
3. Guard railing delineation to be used where shown on the Project Plans.
4. When dike or curb is placed under guard railing, the maximum height of the dike or curb shall be 4". Mountable dike should not be used. For dike and curb details, see Revised Standard Plans RSP A87A and Standard Plan A87B.
5. For details of typical distance between the face of rail and hinge point, see Standard Plan A77C3.

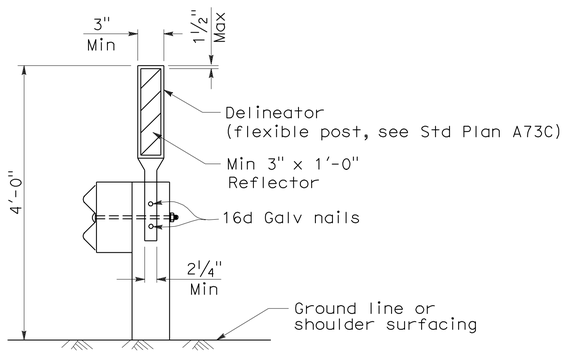

GUARD RAILING DELINEATION

See Note 3

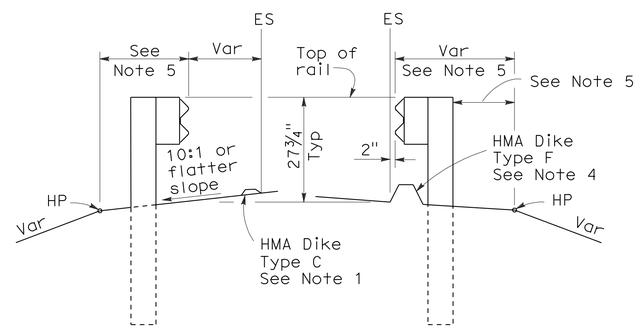

DIKE POSITIONING

See Note 1

STATE OF CALIFORNIA
DEPARTMENT OF TRANSPORTATION

METAL BEAM GUARD RAILING TYPICAL RAILING DELINEATION AND DIKE POSITIONING DETAILS

NO SCALE

RSP A77C4 DATED JUNE 6, 2008 SUPERSEDES STANDARD PLAN A77C4
DATED MAY 1, 2006 - PAGE 47 OF THE STANDARD PLANS BOOK DATED MAY 2006.

REVISED STANDARD PLAN RSP A77C4

2006 REVISED STANDARD PLAN RSP A77C4

12-10-07

DIST	COUNTY	ROUTE	POST MILES TOTAL PROJECT	SHEET NO.	TOTAL SHEETS
12	Ora	241	15.5/39.0	71	117

Randell D. Hiatt
REGISTERED CIVIL ENGINEER

October 20, 2006
PLANS APPROVAL DATE

REGISTERED PROFESSIONAL ENGINEER
Randell D. Hiatt
No. C50200
Exp. 6-30-07
CIVIL
STATE OF CALIFORNIA

The State of California or its officers or agents shall not be responsible for the accuracy or completeness of electronic copies of this plan sheet.

To accompany plans dated 10-18-10

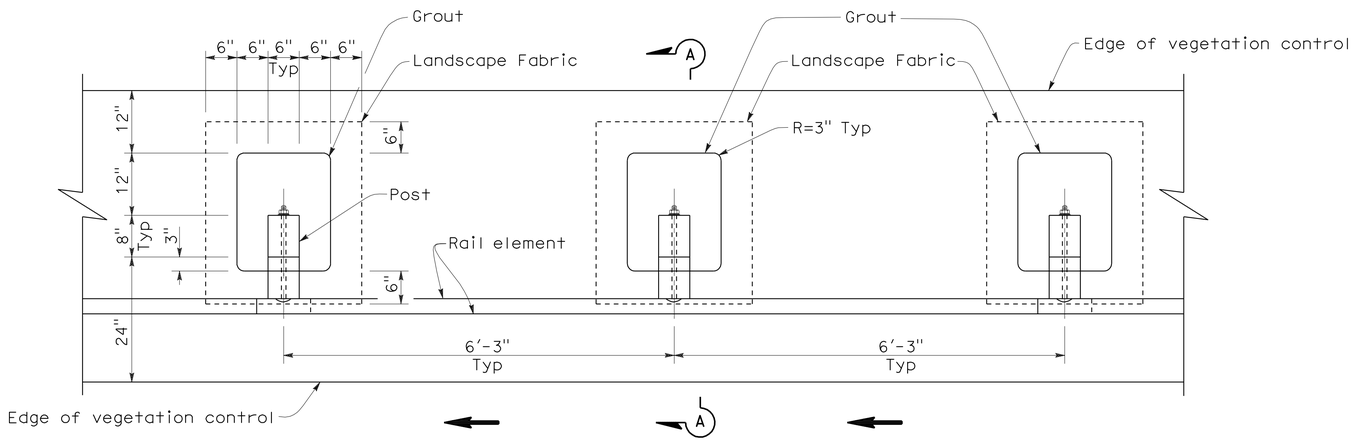

PLAN

NOTES:

1. Where the distance between back of post and hinge point is less than 24", vegetation control to be constructed flush with the back edge of the post.
2. Where dike is constructed under railing, construct vegetation control to back edge of dike. Where paved shoulder is constructed within 24" in front of the post, construct vegetation control to the edge of paved shoulder.
3. Direction of adjacent traffic indicated by ← .

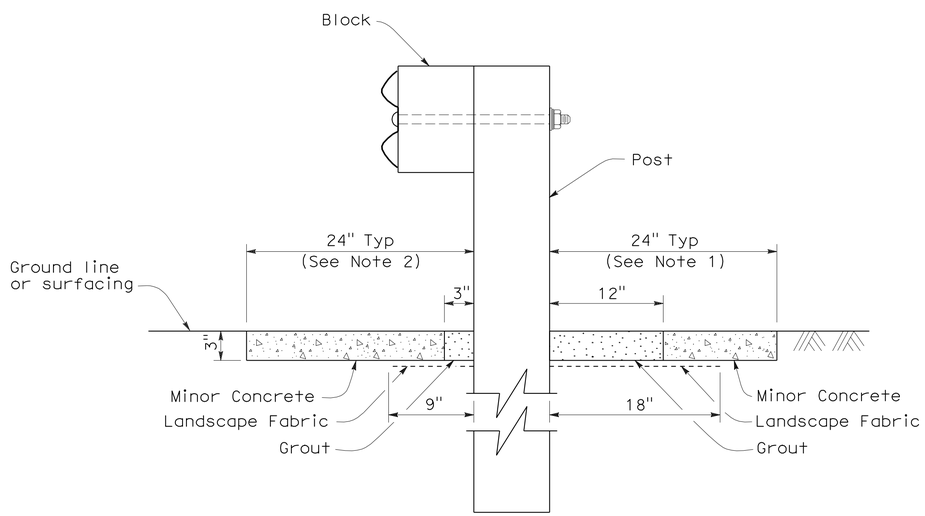

SECTION A-A

STATE OF CALIFORNIA
DEPARTMENT OF TRANSPORTATION

METAL BEAM GUARD RAILING TYPICAL VEGETATION CONTROL STANDARD RAILING SECTION

NO SCALE

NSP A77C5 DATED OCTOBER 20, 2006 SUPPLEMENTS THE STANDARD PLANS BOOK DATED MAY 2006.

NEW STANDARD PLAN NSP A77C5

2006 NEW STANDARD PLAN NSP A77C5

7-17-06

DIST	COUNTY	ROUTE	POST MILES TOTAL PROJECT	SHEET NO.	TOTAL SHEETS
12	Ora	241	15.5/39.0	72	117

Randell D. Hiatt
REGISTERED CIVIL ENGINEER

October 20, 2006
PLANS APPROVAL DATE

REGISTERED PROFESSIONAL ENGINEER
Randell D. Hiatt
No. C50200
Exp. 6-30-07
CIVIL
STATE OF CALIFORNIA

The State of California or its officers or agents shall not be responsible for the accuracy or completeness of electronic copies of this plan sheet.

To accompany plans dated 10-18-10

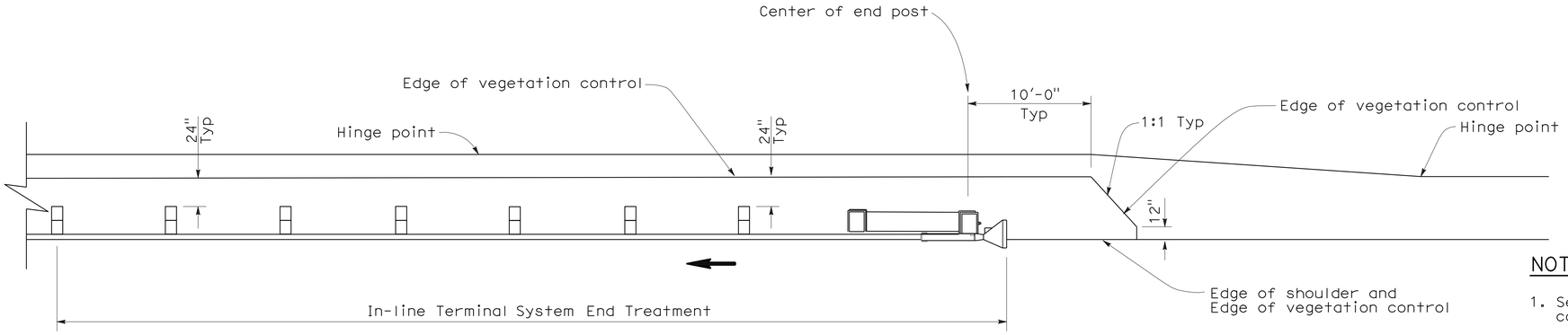

PLAN

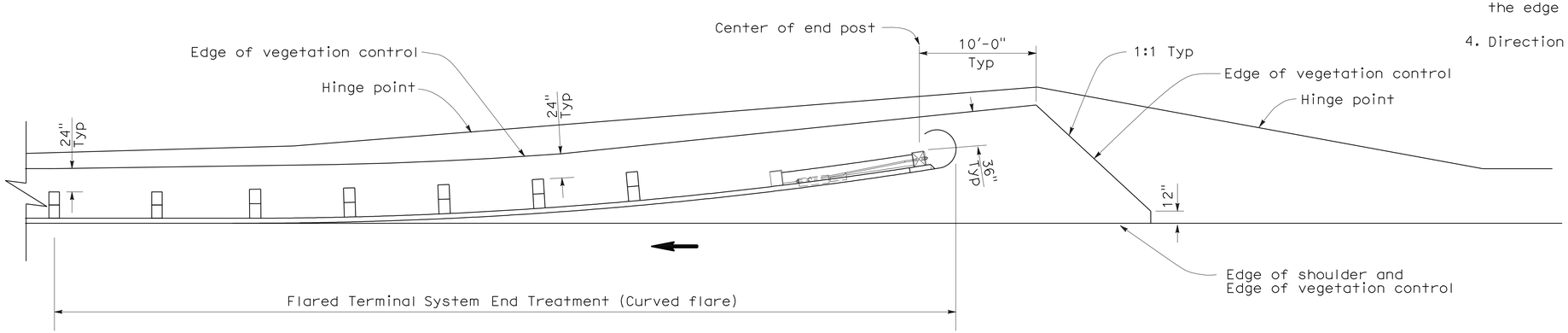

PLAN

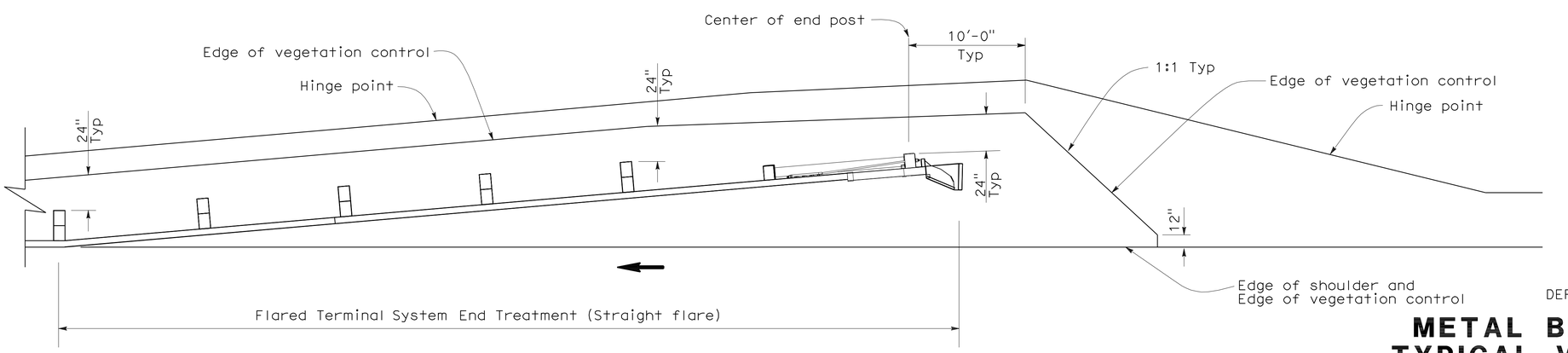

PLAN

NOTES:

1. See New Standard Plan NSP A77C5 for additional vegetation control details.
2. Where the distance between back of post and hinge point is less than 24", vegetation control to be constructed flush with the back edge of the post.
3. Where dike is constructed under railing, construct vegetation control to back edge of dike. Where paved shoulder is constructed within 24" in front of the post, construct vegetation control to the edge of paved shoulder.
4. Direction of adjacent traffic indicated by ←.

STATE OF CALIFORNIA
DEPARTMENT OF TRANSPORTATION

METAL BEAM GUARD RAILING TYPICAL VEGETATION CONTROL FOR TERMINAL SYSTEM END TREATMENTS

NO SCALE

NSP A77C6 DATED OCTOBER 20, 2006 SUPPLEMENTS THE STANDARD PLANS BOOK DATED MAY 2006.

NEW STANDARD PLAN NSP A77C6

2006 NEW STANDARD PLAN NSP A77C6

7-17-06

DIST	COUNTY	ROUTE	POST MILES TOTAL PROJECT	SHEET NO.	TOTAL SHEETS
12	Ora	241	15.5/39.0	73	117

Randell D. Hiatt
REGISTERED CIVIL ENGINEER

October 20, 2006
PLANS APPROVAL DATE

REGISTERED PROFESSIONAL ENGINEER
Randell D. Hiatt
No. C50200
Exp. 6-30-07
CIVIL
STATE OF CALIFORNIA

The State of California or its officers or agents shall not be responsible for the accuracy or completeness of electronic copies of this plan sheet.

To accompany plans dated 10-18-10

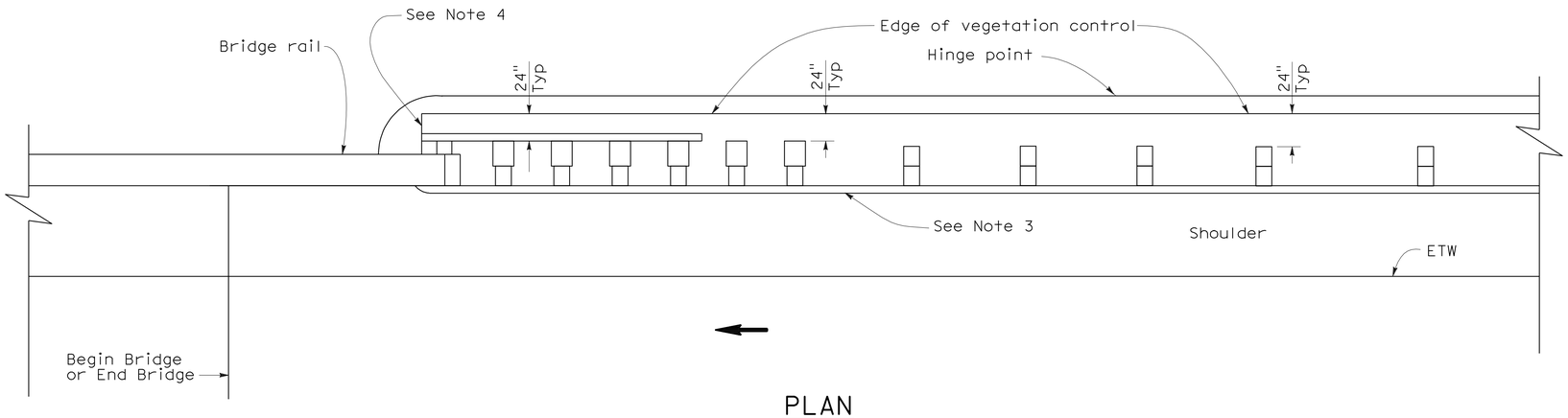

PLAN

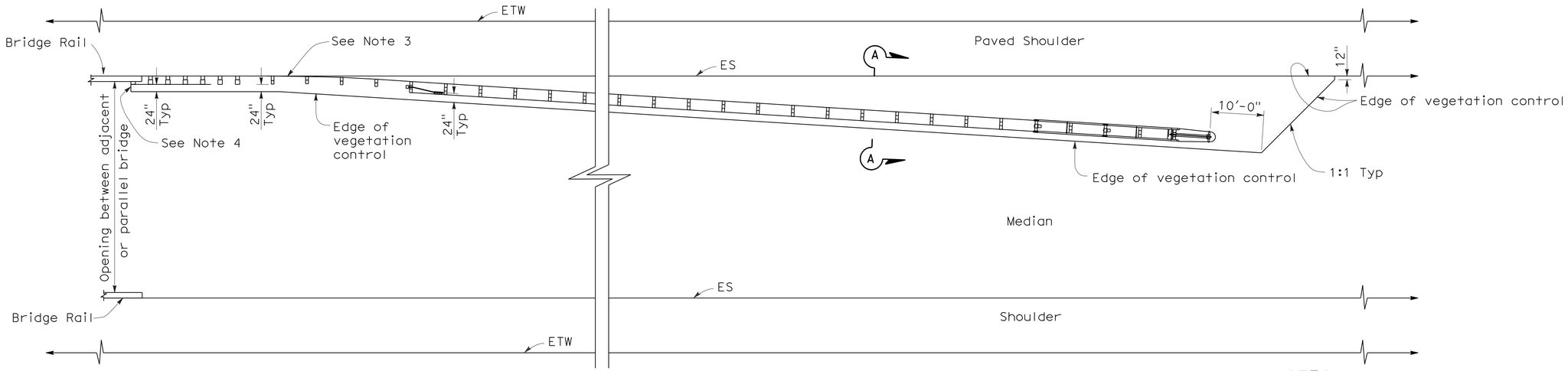

PLAN

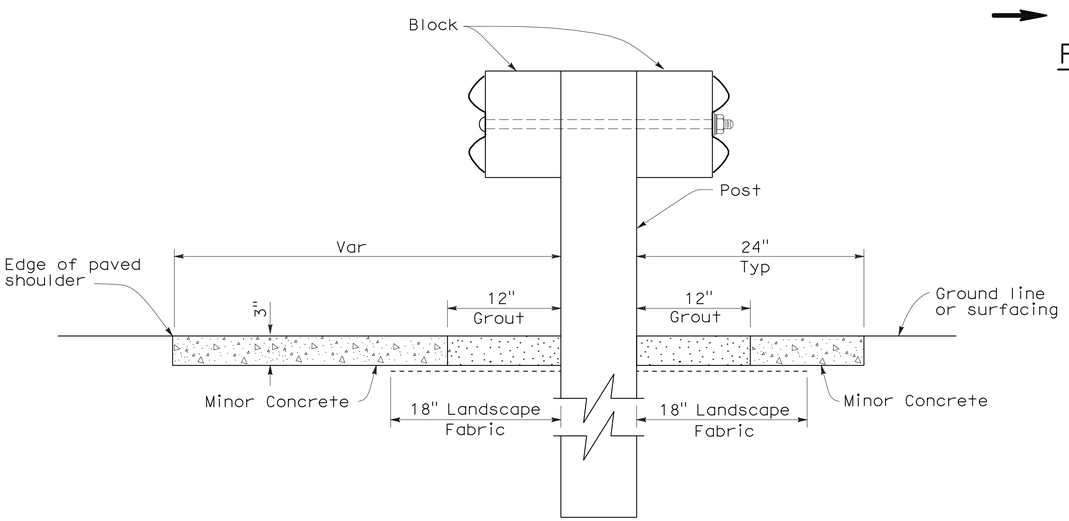

SECTION A-A

NOTES:

1. See New Standard Plan NSP A77C5 for additional vegetation control details.
2. Where the distance between back of post and hinge point is less than 24", vegetation control to be constructed flush with the back edge of the post.
3. Where dike is constructed under railing, construct vegetation control to back edge of dike. Where paved shoulder is constructed within 24" in front of the post, construct vegetation control to the edge of paved shoulder.
4. End vegetation control at end of backside rail element.
5. Direction of adjacent traffic indicated by ←.

STATE OF CALIFORNIA
DEPARTMENT OF TRANSPORTATION

METAL BEAM GUARD RAILING TYPICAL VEGETATION CONTROL AT STRUCTURE APPROACH AND DEPARTURE

NO SCALE

NSP A77C7 DATED OCTOBER 20, 2006 SUPPLEMENTS THE STANDARD PLANS BOOK DATED MAY 2006.

NEW STANDARD PLAN NSP A77C7

2006 NEW STANDARD PLAN NSP A77C7

7-17-06

DIST	COUNTY	ROUTE	POST MILES TOTAL PROJECT	SHEET NO.	TOTAL SHEETS
12	Ora	241	15.5/39.0	74	117

Randell D. Hiatt
REGISTERED CIVIL ENGINEER

October 20, 2006
PLANS APPROVAL DATE

REGISTERED PROFESSIONAL ENGINEER
Randell D. Hiatt
No. C50200
Exp. 6-30-07
CIVIL
STATE OF CALIFORNIA

The State of California or its officers or agents shall not be responsible for the accuracy or completeness of electronic copies of this plan sheet.

To accompany plans dated 10-18-10

NOTES:

1. See New Standard Plan NSP A77C5 for additional vegetation control details.
2. Where the distance between back of post and hinge point is less than 24", vegetation control to be constructed flush with the back edge of the post.
3. Where dike is constructed under railing, construct vegetation control to back edge of dike. Where paved shoulder is constructed within 24" in front of the post, construct vegetation control to the edge of paved shoulder.
4. Direction of adjacent traffic indicated by ←.

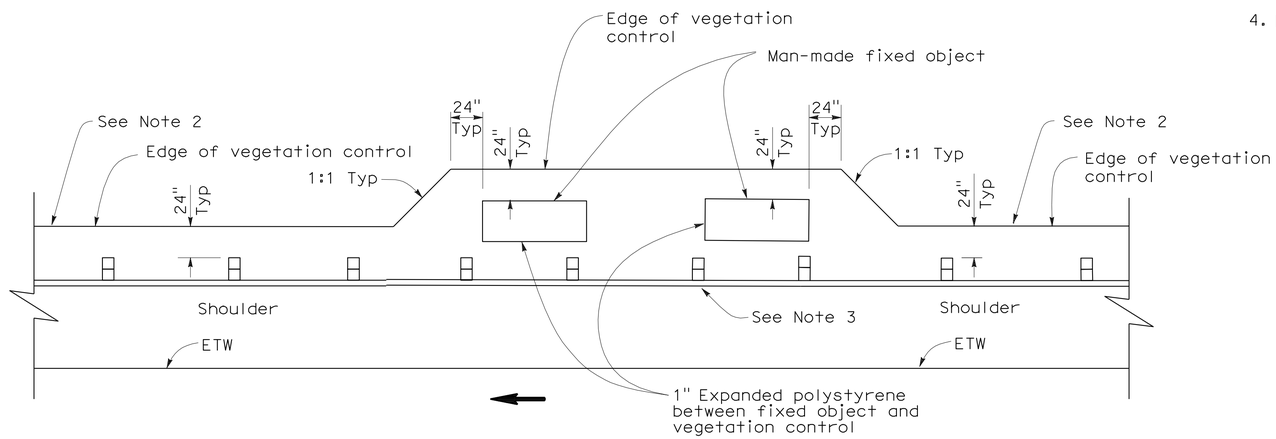

PLAN

FIXED OBJECT(S) ON SHOULDER

STATE OF CALIFORNIA
DEPARTMENT OF TRANSPORTATION

METAL BEAM GUARD RAILING TYPICAL VEGETATION CONTROL AT FIXED OBJECT

NO SCALE

NSP A77C8 DATED OCTOBER 20, 2006 SUPPLEMENTS THE STANDARD PLANS BOOK DATED MAY 2006.

NEW STANDARD PLAN NSP A77C8

2006 NEW STANDARD PLAN NSP A77C8

7-17-06

DIST	COUNTY	ROUTE	POST MILES TOTAL PROJECT	SHEET NO.	TOTAL SHEETS
12	Ora	241	15.5/39.0	75	117

Randell D. Hiatt
REGISTERED CIVIL ENGINEER

October 20, 2006
PLANS APPROVAL DATE

REGISTERED PROFESSIONAL ENGINEER
Randell D. Hiatt
No. C50200
Exp. 6-30-07
CIVIL
STATE OF CALIFORNIA

The State of California or its officers or agents shall not be responsible for the accuracy or completeness of electronic copies of this plan sheet.

To accompany plans dated 10-18-10

NOTES:

1. See New Standard Plan NSP A77C5 for additional vegetation control details.
2. Where dike is constructed under railing, construct vegetation control to back edge of dike. Where paved shoulder is constructed within 24" in front of the post, construct vegetation control to the edge of paved shoulder.
3. Direction of adjacent traffic indicated by ← .

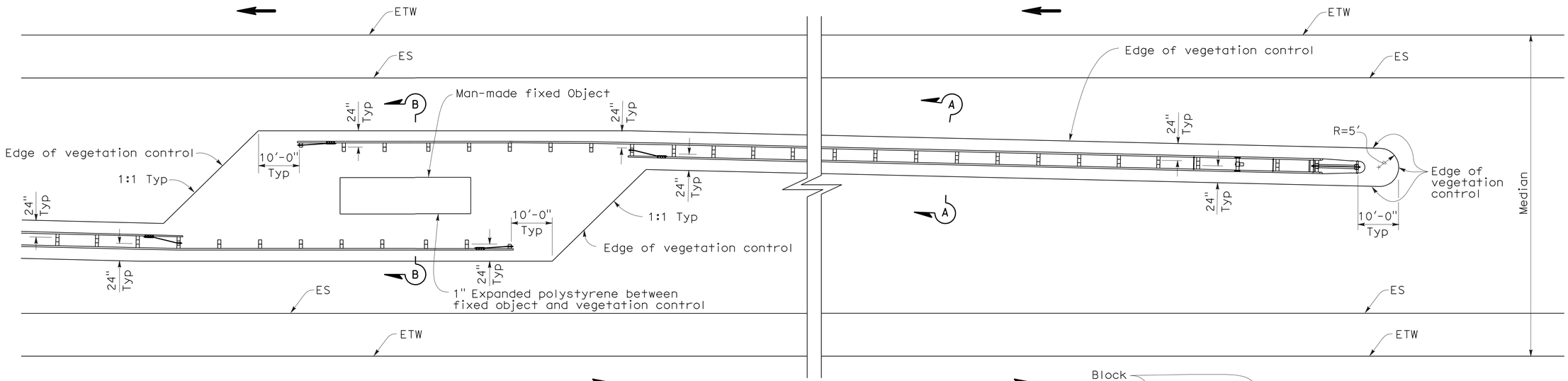

PLAN

FIXED OBJECT(S) IN MEDIAN

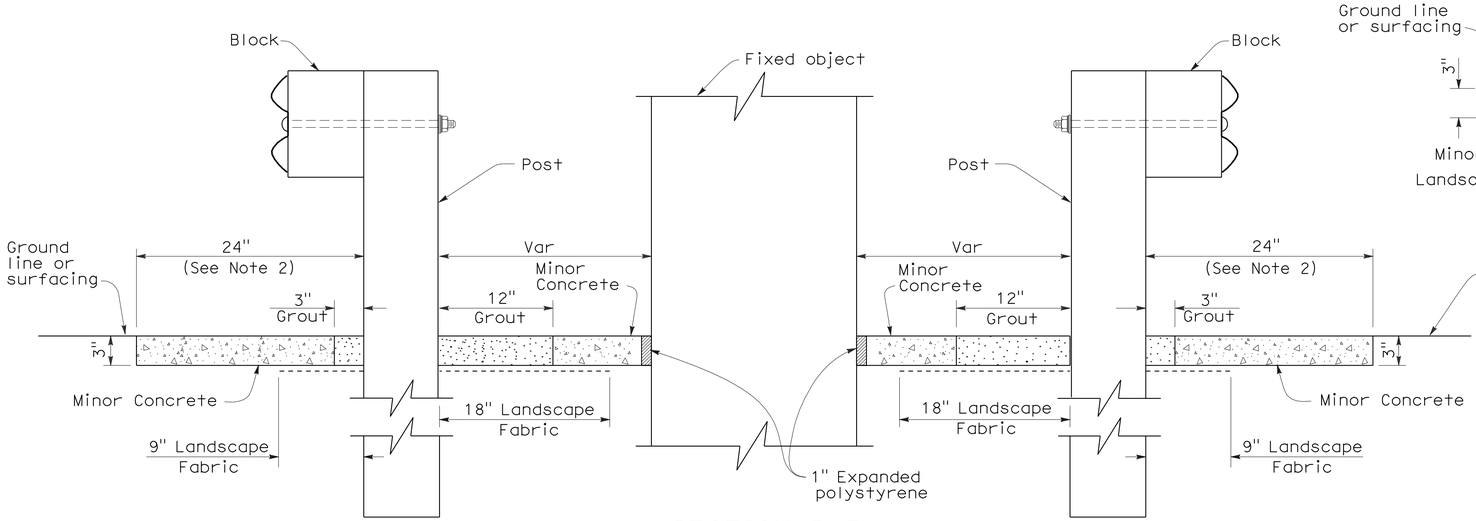

SECTION B-B

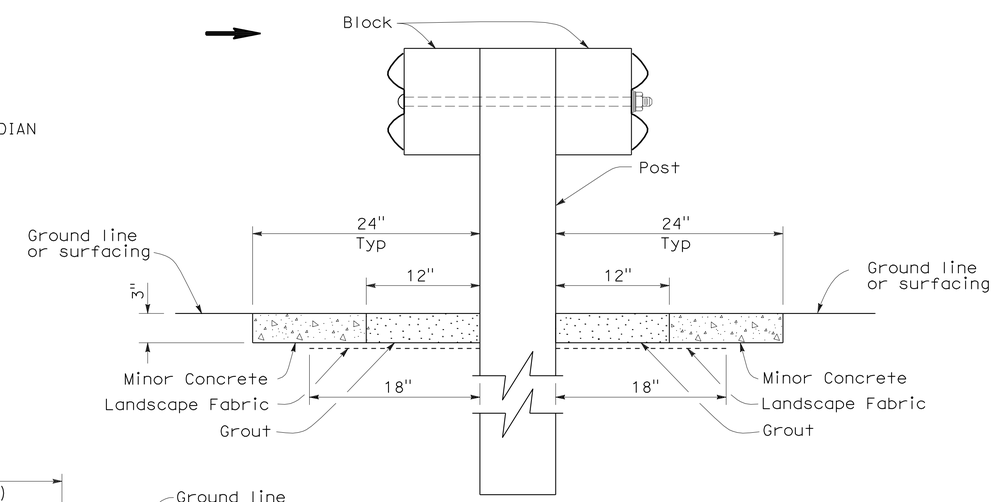

SECTION A-A

STATE OF CALIFORNIA
DEPARTMENT OF TRANSPORTATION

METAL BEAM GUARD RAILING TYPICAL VEGETATION CONTROL AT FIXED OBJECT

NO SCALE

NSP A77C9 DATED OCTOBER 20, 2006 SUPPLEMENTS THE STANDARD PLANS BOOK DATED MAY 2006.

NEW STANDARD PLAN NSP A77C9

2006 NEW STANDARD PLAN NSP A77C9

7-17-06

DIST	COUNTY	ROUTE	POST MILES TOTAL PROJECT	SHEET NO.	TOTAL SHEETS
12	Ora	241	15.5/39.0	76	117

Randell D. Hiatt
REGISTERED CIVIL ENGINEER

October 20, 2006
PLANS APPROVAL DATE

REGISTERED PROFESSIONAL ENGINEER
Randell D. Hiatt
No. C50200
Exp. 6-30-07
CIVIL
STATE OF CALIFORNIA

The State of California or its officers or agents shall not be responsible for the accuracy or completeness of electronic copies of this plan sheet.

To accompany plans dated 10-18-10

NOTES:

1. See New Standard Plan NSP A77C5 for additional vegetation control details.
2. Where dike is constructed under railing, construct vegetation control to back edge of dike. Where paved shoulder is constructed within 24" in front of the post, construct vegetation control to the edge of paved shoulder.
3. Direction of adjacent traffic indicated by ←.

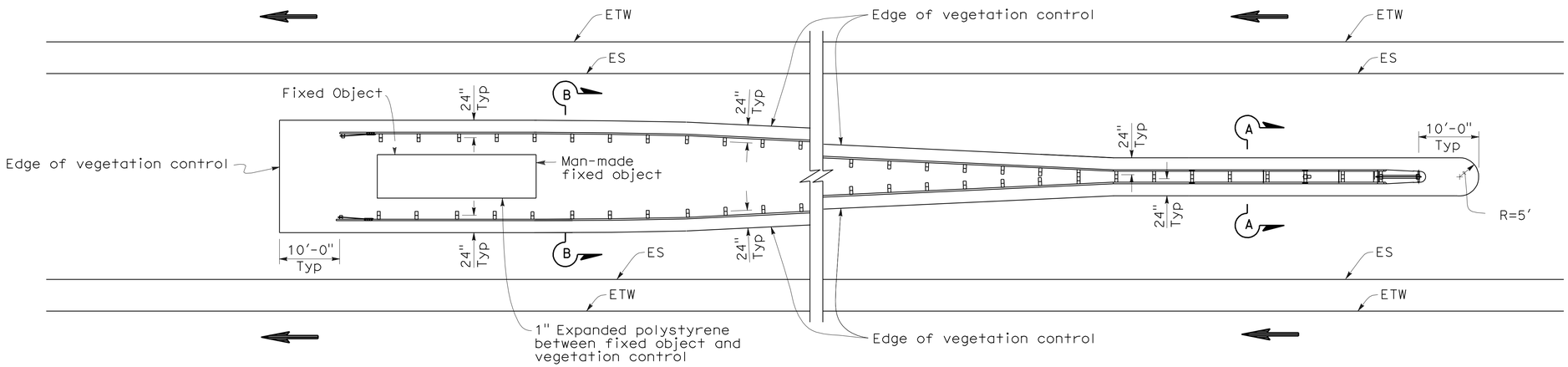

PLAN

FIXED OBJECT(S) BETWEEN SEPARATE ROADBEDS
(ONE-WAY TRAFFIC)

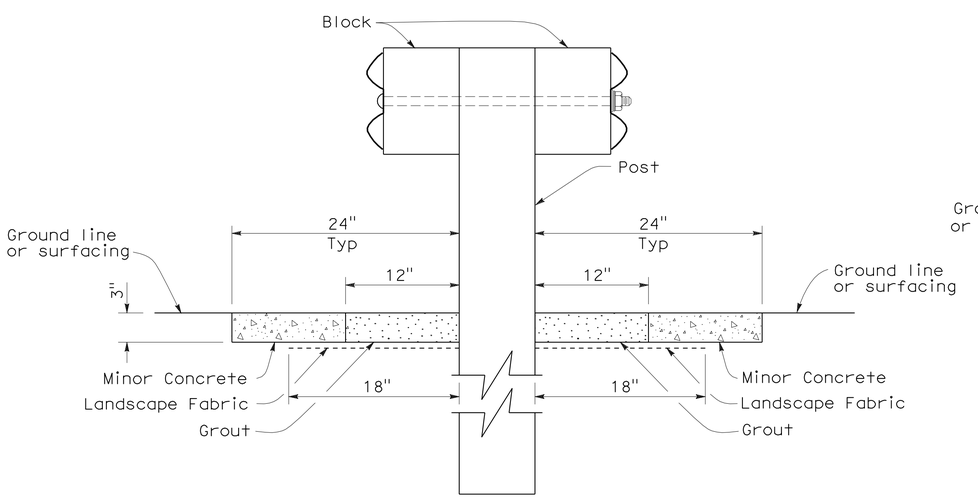

SECTION A-A

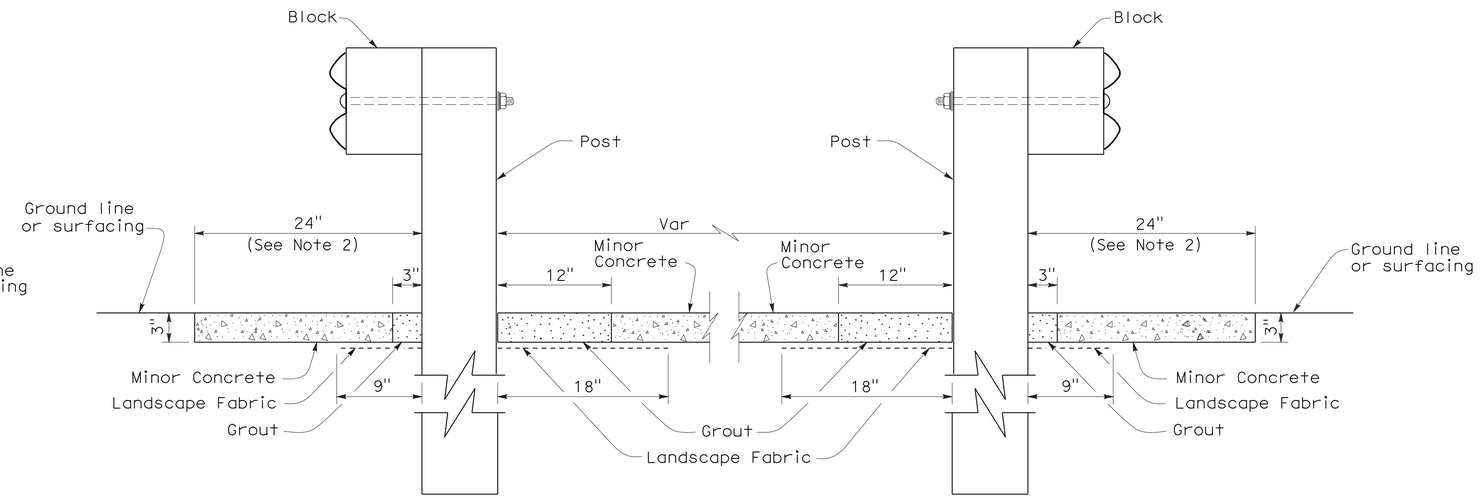

SECTION B-B

STATE OF CALIFORNIA
DEPARTMENT OF TRANSPORTATION

METAL BEAM GUARD RAILING TYPICAL VEGETATION CONTROL AT FIXED OBJECT

NO SCALE

NSP A77C10 DATED OCTOBER 20, 2006 SUPPLEMENTS THE STANDARD PLANS BOOK DATED MAY 2006.

NEW STANDARD PLAN NSP A77C10

2006 NEW STANDARD PLAN NSP A77C10

7-17-06

DIST	COUNTY	ROUTE	POST MILES TOTAL PROJECT	SHEET NO.	TOTAL SHEETS
12	Ora	241	15.5/39.0	77	117

Randell D. Hiatt
REGISTERED CIVIL ENGINEER

June 6, 2008
PLANS APPROVAL DATE

REGISTERED PROFESSIONAL ENGINEER Randell D. Hiatt No. C50200 Exp. 6-30-09 CIVIL STATE OF CALIFORNIA

The State of California or its officers or agents shall not be responsible for the accuracy or completeness of electronic copies of this plan sheet.

To accompany plans dated 10-18-10

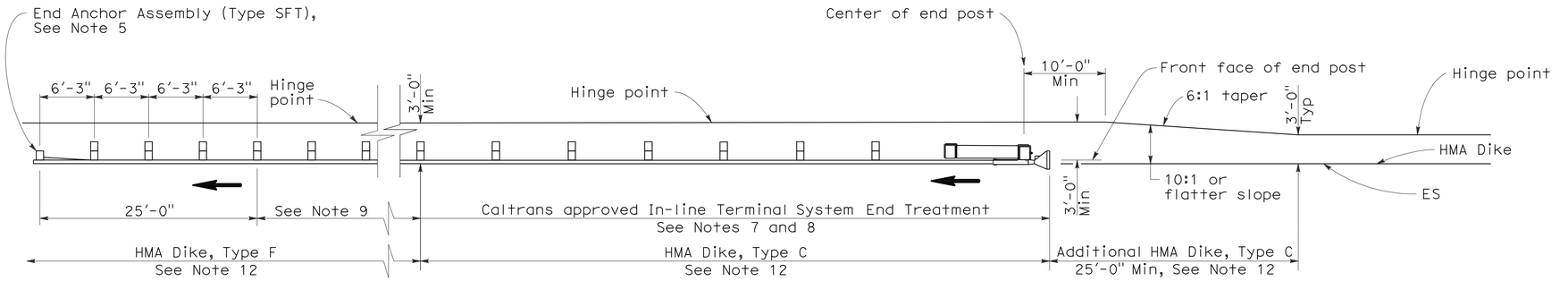

TYPE 11A LAYOUT

(EMBANKMENT GUARD INSTALLATION WITH IN-LINE END TREATMENT AT TRAFFIC APPROACH END OF RAILING)
See Note 6

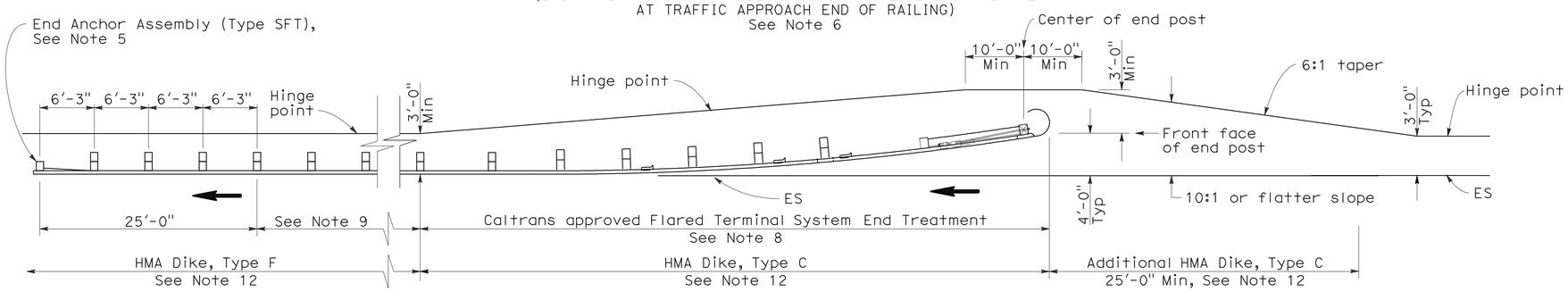

TYPE 11B LAYOUT

(EMBANKMENT GUARD RAILING INSTALLATION WITH FLARED END TREATMENT AT TRAFFIC APPROACH END OF RAILING)
See Note 6

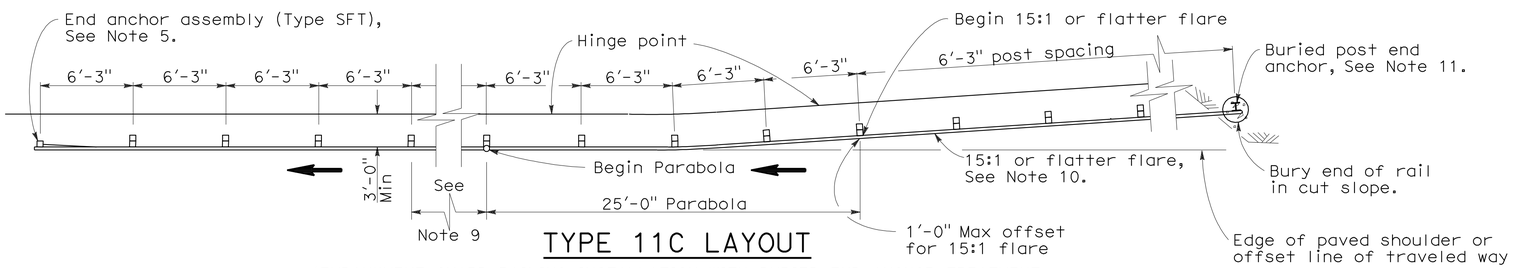

TYPE 11C LAYOUT

(EMBANKMENT GUARD RAILING INSTALLATION WITH BURIED END ANCHOR TREATMENT AT TRAFFIC APPROACH END OF RAILING)
See Notes 6 and 12

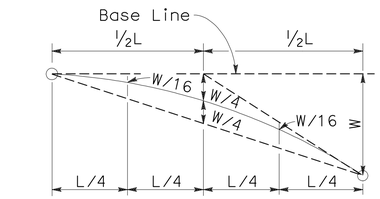

TYPICAL PARABOLIC LAYOUT

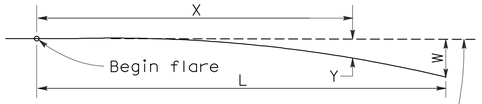

Base Line (Edge of paved shoulder or offset line of edge of traveled way)

$$Y = \frac{WX^2}{L^2}$$

Y = Offset from base line
W = Maximum offset
X = Distance along base line
L = Length of flare

PARABOLIC FLARE OFFSETS

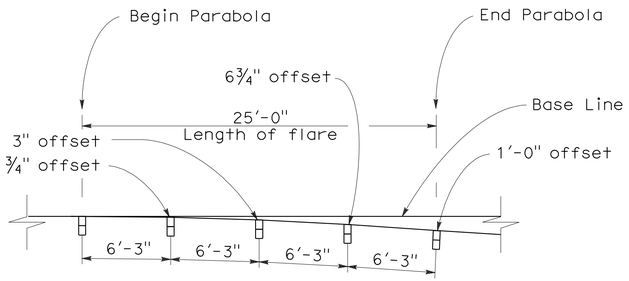

TYPICAL FLARE OFFSETS FOR 1 FOOT MAX END OFFSET

NOTES:

1. Line post, blocks and hardware to be used are shown on Standard Plans A77A1, A77A2, A77B1, A77C1, and A77C2.
2. Guard rail post spacing to be 6'-3" center to center, except as otherwise noted.
3. Except as noted, line posts are 6" x 8" x 6'-0" wood with 6" x 8" x 1'-2" wood blocks. W6 x 9 steel posts, 6'-0" in length, with 6" x 8" x 1'-2" notched wood blocks or recycled plastic blocks may be used for 6" x 8" x 6'-0" wood post with 6" x 8" x 1'-2" wood blocks where applicable and when specified.
4. Direction of adjacent traffic indicated by ⟶.
5. For End Anchor Assembly (Type SFT) details, see Standard Plan A77H1.
6. Layout Types 11A, 11B or 11C are typically used where guard railing is recommended to shield embankment slopes and a crashworthy end treatment is required for only one direction of traffic.
7. In-line Terminal System End Treatments are used where site conditions will not accommodate a flared end treatment.
8. The type of terminal system end treatment to be used will be shown on the Project Plans.
9. Dependent on site conditions (embankment height and side slope), construction of additional guard railing (length equal to multiples of 12'-6" with 6'-3" post spacing) may be advisable.
10. The 15:1 or flatter flare used with buried end anchors is based on the edge of the paved shoulder or offset line of edge of the traveled way. The length of guard railing within the 15:1 or flatter flare is based on site conditions and should be a length equal to multiples of 12'-6".
11. For details of the buried post end anchor used with Type 11C Layout, see Standard Plan A77I2.
12. Where placement of dike is required with guard railing installations, see Revised Standard Plan RSP A77C4 for dike positioning details.

STATE OF CALIFORNIA
DEPARTMENT OF TRANSPORTATION

METAL BEAM GUARD RAILING TYPICAL LAYOUTS FOR EMBANKMENTS

NO SCALE

RSP A77E1 DATED JUNE 6, 2008 SUPERSEDES STANDARD PLAN A77E1
DATED MAY 1, 2006 - PAGE 48 OF THE STANDARD PLANS BOOK DATED MAY 2006.

REVISED STANDARD PLAN RSP A77E1

2006 REVISED STANDARD PLAN RSP A77E1

12-10-07

DIST	COUNTY	ROUTE	POST MILES TOTAL PROJECT	SHEET NO.	TOTAL SHEETS
12	Ora	241	15.5/39.0	78	117

Randell D. Hiatt
REGISTERED CIVIL ENGINEER

June 6, 2008
PLANS APPROVAL DATE

REGISTERED PROFESSIONAL ENGINEER
Randell D. Hiatt
No. C50200
Exp. 6-30-09
CIVIL
STATE OF CALIFORNIA

The State of California or its officers or agents shall not be responsible for the accuracy or completeness of electronic copies of this plan sheet.

To accompany plans dated 10-18-10

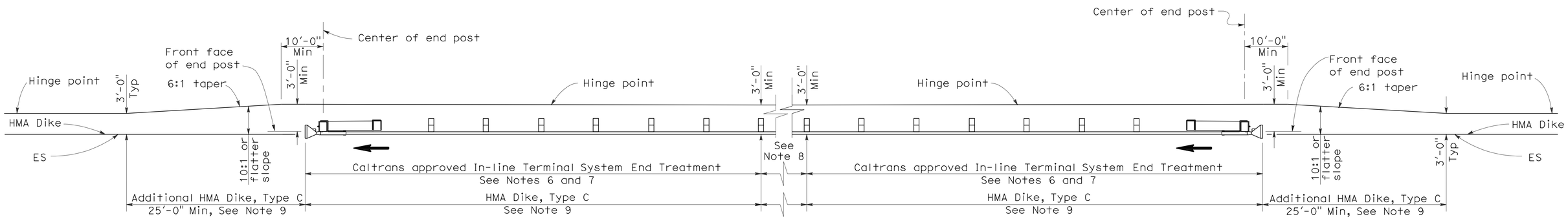

TYPE 11D LAYOUT

(EMBANKMENT GUARD RAILING INSTALLATION WITH
IN-LINE END TREATMENT AT EACH END OF RAILING)
See Note 5

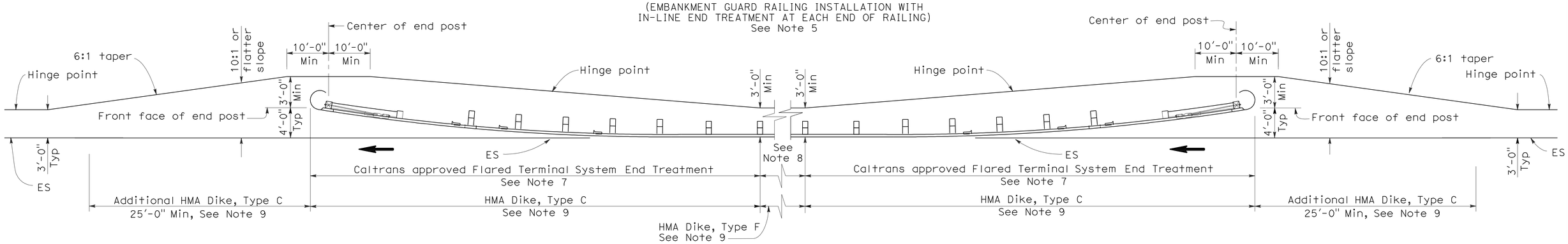

TYPE 11E LAYOUT

(EMBANKMENT GUARD RAILING INSTALLATION WITH
FLARED END TREATMENT AT EACH END OF RAILING)
See Note 5

NOTES:

1. Line post, blocks and hardware to be used are shown on Standard Plans A77A1, A77A2, A77B1, A77C1 and A77C2.
2. Guard rail post spacing to be 6'-3" center to center, except as otherwise noted.
3. Except as noted, line posts are 6" x 8" x 6'-0" wood with 6" x 8" x 1'-2" wood blocks, W6 x 9 steel posts, 6'-0" in length, with 6" x 8" x 1'-2" notched wood blocks or plastic blocks may be used for 6" x 8" x 6'-0" wood post with 6" x 8" x 1'-2" wood blocks where applicable and when specified.
4. Direction of adjacent traffic indicated by ⟶.
5. Layout Types 11D through 11L, shown on the A77E Series of Revised Standard Plans, are typically used where guard railing is recommended to shield embankment slopes and a crashworthy end treatment is required for both directions of traffic.
6. In-line Terminal System End Treatments are used where site conditions will not accommodate a flared end treatment.
7. The type of terminal system end treatment to be used will be shown on the Project Plans.
8. Dependent on site conditions (embankment height and side slope), construction of additional guard railing (length equal to multiples of 12'-6" with 6'-3" post spacing) may be advisable.
9. Where placement of dike is required with guard railing installations, see Revised Standard Plan RSP A77C4 for dike positioning details.

STATE OF CALIFORNIA
DEPARTMENT OF TRANSPORTATION

METAL BEAM GUARD RAILING TYPICAL LAYOUTS FOR EMBANKMENTS

NO SCALE

RSP A77E2 DATED JUNE 6, 2008 SUPERSEDES STANDARD PLAN A77E2
DATED MAY 1, 2006 - PAGE 49 OF THE STANDARD PLANS BOOK DATED MAY 2006.

REVISED STANDARD PLAN RSP A77E2

2006 REVISED STANDARD PLAN RSP A77E2

12-10-07

DIST	COUNTY	ROUTE	POST MILES TOTAL PROJECT	SHEET NO.	TOTAL SHEETS
12	Ora	241	15.5/39.0	79	117

Randell D. Hiatt
REGISTERED CIVIL ENGINEER

June 6, 2008
PLANS APPROVAL DATE

REGISTERED PROFESSIONAL ENGINEER
Randell D. Hiatt
No. C50200
Exp. 6-30-09
CIVIL
STATE OF CALIFORNIA

The State of California or its officers or agents shall not be responsible for the accuracy or completeness of electronic copies of this plan sheet.

To accompany plans dated 10-18-10

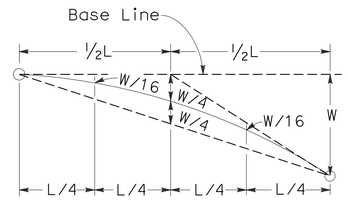

TYPICAL PARABOLIC LAYOUT

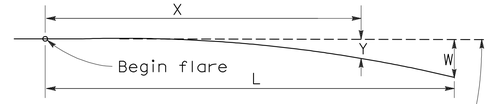

Base Line (Edge of paved shoulder or offset line of edge of traveled way)

$$Y = \frac{WX^2}{L^2}$$

Y = Offset from base line
W = Maximum offset
X = Distance along base line
L = Length of flare

PARABOLIC FLARE OFFSETS

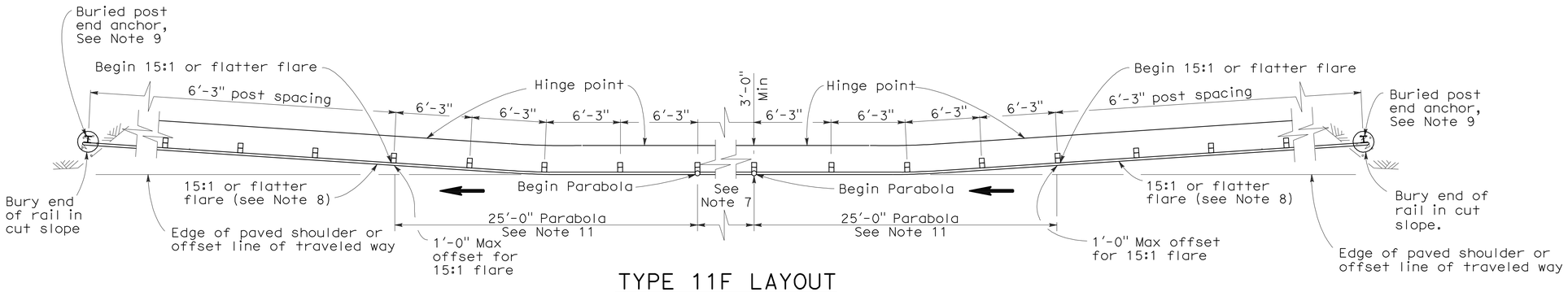

TYPE 11F LAYOUT

(EMBANKMENT GUARD RAILING INSTALLATION WITH A BURIED END ANCHOR TREATMENT AT EACH END OF RAILING)
See Notes 5 and 10

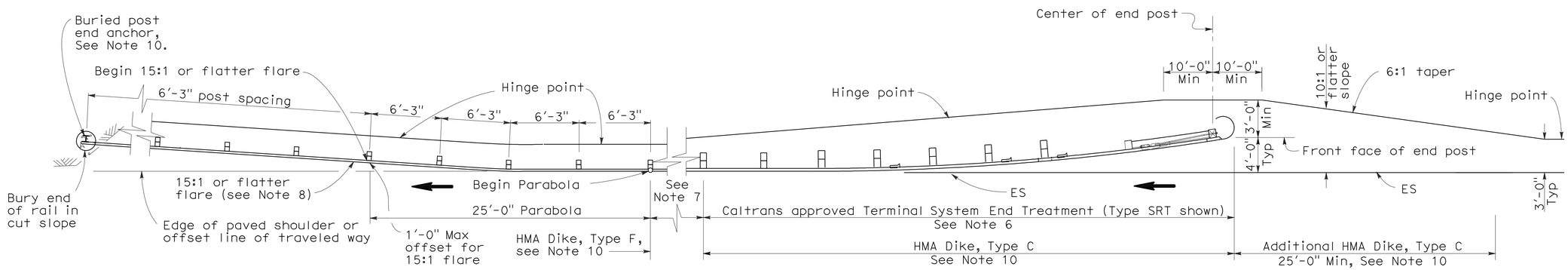

TYPE 11G LAYOUT

(EMBANKMENT GUARD RAILING INSTALLATION WITH FLARED END TREATMENT AND A BURIED END ANCHOR TREATMENT AT THE ENDS OF RAILING)
See Notes 5 and 10

NOTES:

1. Line post, blocks and hardware to be used are shown on Standard Plans A77A1, A77A2, A77B1, A77C1 and A77C2.
2. Guard rail post spacing to be 6'-3" center to center, except as otherwise noted.
3. Except as noted, line posts are 6" x 8" x 6'-0" wood with 6" x 8" x 1'-2" wood blocks. W6 x 9 steel posts, 6'-0" in length, with 6" x 8" x 1'-2" notched wood blocks or plastic blocks may be used for 6" x 8" x 6'-0" wood post with 6" x 8" x 1'-2" wood blocks where applicable and when specified.
4. Direction of adjacent traffic indicated by ⟶.
5. Layout Types 11D through 11L, shown on the A77E Series of Revised Standard Plans, are typically used where guard railing is recommended to shield embankment slopes and a crashworthy end treatment is required for both directions of traffic.
6. The type of terminal system end treatment to be used will be shown on the Project Plans.
7. Dependent on site conditions (embankment height and side slope), construction of additional guard railing (length equal to multiples of 12'-6" with 6'-3" post spacing) may be advisable.
8. The 15:1 or flatter flare used with buried end anchors is based on the edge of the paved shoulder or offset line of edge of the traveled way. The length of guard railing within the 15:1 or flatter flare is based on site conditions and should be a length equal to multiples of 12'-6".
9. For details of the buried post end anchor used with Type 11F and 11G Layouts, see Standard Plan A77I2.
10. Where placement of dike is required with guard railing installations, see Revised Standard Plan RSP A77C4 for dike positioning details.
11. For typical flare offsets for 25'-0" length parabola with maximum offset of 1'-0", see Revised Standard Plan RSP A77E1.

STATE OF CALIFORNIA
DEPARTMENT OF TRANSPORTATION

METAL BEAM GUARD RAILING TYPICAL LAYOUTS FOR EMBANKMENTS

NO SCALE

RSP A77E3 DATED JUNE 6, 2008 SUPERSEDES STANDARD PLAN A77E3 DATED MAY 1, 2006 - PAGE 50 OF THE STANDARD PLANS BOOK DATED MAY 2006.

REVISED STANDARD PLAN RSP A77E3

2006 REVISED STANDARD PLAN RSP A77E3

12-10-07

DIST	COUNTY	ROUTE	POST MILES TOTAL PROJECT	SHEET NO.	TOTAL SHEETS
12	Ora	241	15.5/39.0	80	117

Randell D. Hiatt
REGISTERED CIVIL ENGINEER

June 6, 2008
PLANS APPROVAL DATE

REGISTERED PROFESSIONAL ENGINEER
Randell D. Hiatt
No. C50200
Exp. 6-30-09
CIVIL
STATE OF CALIFORNIA

The State of California or its officers or agents shall not be responsible for the accuracy or completeness of electronic copies of this plan sheet.

To accompany plans dated 10-18-10

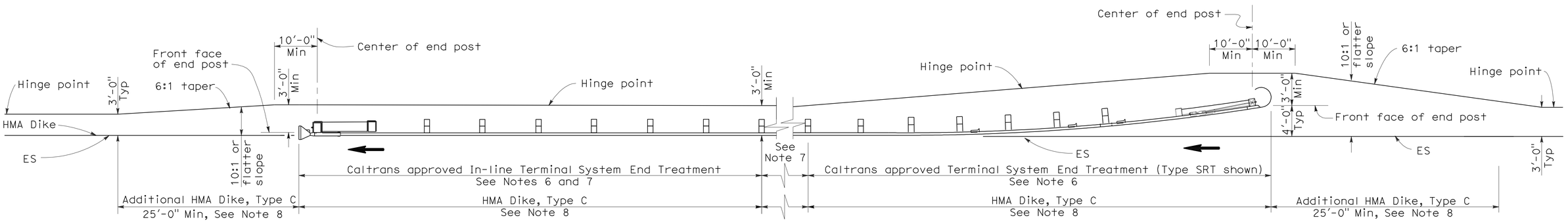

TYPE 11H LAYOUT

(EMBANKMENT GUARD RAILING INSTALLATION WITH FLARED END TREATMENT
AND AN IN-LINE TREATMENT AT THE ENDS OF RAILING)
See Notes 5 and 8

NOTES:

1. Line post, blocks and hardware to be used are shown on Standard Plans A77A1, A77A2, A77B1, A77C1 and A77C2.
2. Guard rail post spacing to be 6'-3" center to center, except as otherwise noted.
3. Except as noted, line posts are 6" x 8" x 6'-0" wood with 6" x 8" x 1'-2" wood blocks. W6 x 9 steel posts, 6'-0" in length, with 6" x 8" x 1'-2" notched wood blocks or plastic blocks may be used for 6" x 8" x 6'-0" wood post with 6" x 8" x 1'-2" wood blocks where applicable and when specified.
4. Direction of adjacent traffic indicated by ⟶.
5. Layout Types 11D through 11L, shown on the A77E Series of Revised Standard Plans, are typically used where guard railing is recommended to shield embankment slopes and a crashworthy end treatment is required for both directions of traffic.
6. The type of terminal system end treatment to be used will be shown on the Project Plans.
7. Dependent on site conditions (embankment height and side slope), construction of additional guard railing (length equal to multiples of 12'-6" with 6'-3" post spacing) may be advisable.
8. Where placement of dike is required with guard railing installations, see Revised Standard Plan RSP A77C4 for dike positioning details.

STATE OF CALIFORNIA
DEPARTMENT OF TRANSPORTATION

METAL BEAM GUARD RAILING TYPICAL LAYOUTS FOR EMBANKMENTS

NO SCALE

RSP A77E4 DATED JUNE 6, 2008 SUPERSEDES STANDARD PLAN A77E4
DATED MAY 1, 2006 - PAGE 51 OF THE STANDARD PLANS BOOK DATED MAY 2006.

REVISED STANDARD PLAN RSP A77E4

2006 REVISED STANDARD PLAN RSP A77E4

12-10-07

DIST	COUNTY	ROUTE	POST MILES TOTAL PROJECT	SHEET NO.	TOTAL SHEETS
12	Ora	241	15.5/39.0	81	117

Randell D. Hiatt
REGISTERED CIVIL ENGINEER

June 6, 2008
PLANS APPROVAL DATE

REGISTERED PROFESSIONAL ENGINEER
Randell D. Hiatt
No. C50200
Exp. 6-30-09
CIVIL
STATE OF CALIFORNIA

The State of California or its officers or agents shall not be responsible for the accuracy or completeness of electronic copies of this plan sheet.

To accompany plans dated 10-18-10

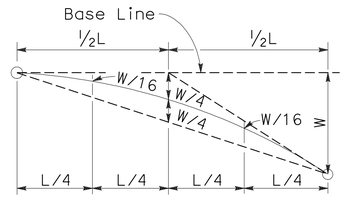

TYPICAL PARABOLIC LAYOUT

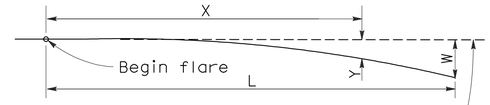

Base Line (Edge of paved shoulder or offset line of edge of traveled way)

$$Y = \frac{WX^2}{L^2}$$

Y = Offset from base line
W = Maximum offset
X = Distance along base line
L = Length of flare

PARABOLIC FLARE OFFSETS

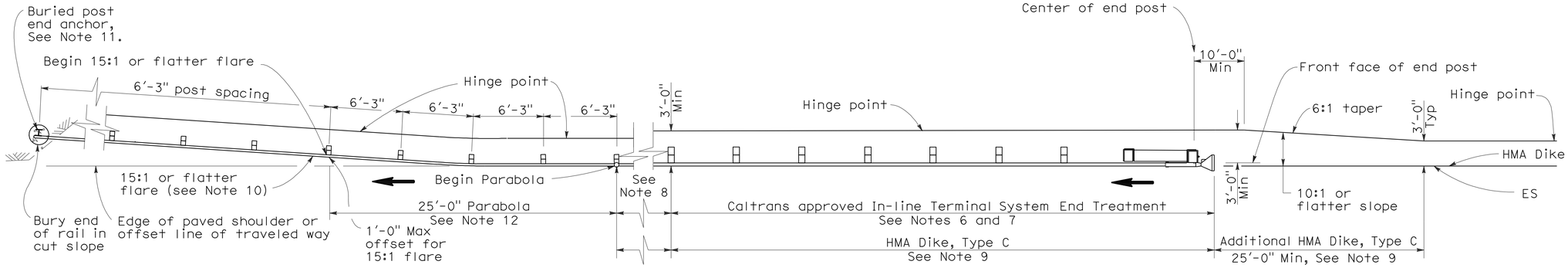

TYPE 11I LAYOUT

(EMBANKMENT GUARD RAILING INSTALLATION WITH IN-LINE END TREATMENT AND A BURIED END ANCHOR TREATMENT AT THE ENDS OF RAILING)
See Note 5

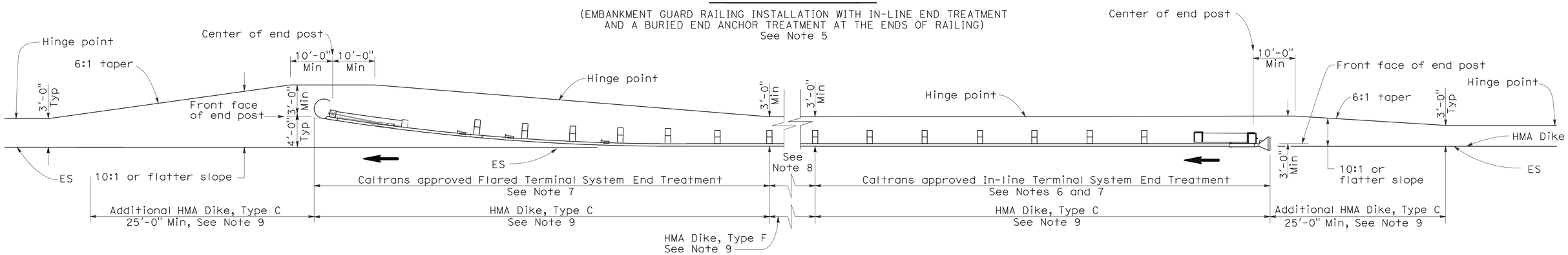

TYPE 11J LAYOUT

(EMBANKMENT GUARD RAILING INSTALLATION WITH IN-LINE END TREATMENT AND FLARED END TREATMENT AT THE ENDS OF RAILING)
See Note 5

NOTES:

1. Line post, blocks and hardware to be used are shown on Standard Plans A77A1, A77A2, A77B1, A77C1 and A77C2.
2. Guard rail post spacing to be 6'-3" center to center, except as otherwise noted.
3. Except as noted, line posts are 6" x 8" x 6'-0" wood with 6" x 8" x 1'-2" wood blocks. W6 x 9 steel posts, 6'-0" in length, with 6" x 8" x 1'-2" notched wood blocks or plastic blocks may be used for 6" x 8" x 6'-0" wood post with 6" x 8" x 1'-2" wood blocks where applicable and when specified.
4. Direction of adjacent traffic indicated by ➡.
5. Layout Types 11D through 11L, shown on the A77E Series of Revised Standard Plans, are typically used where guard railing is recommended to shield embamkment slopes and a crashworthy end treatment is required for both directions of traffic.
6. In-line Terminal System End Treatments are used where site conditions will not accommodate a flared end treatment.
7. The type of terminal system end treatment to be used will be shown on the Project Plans.
8. Dependent on site conditions (embankment height and side slope), construction of additional guard railing (length equal to multiples of 12'-6" with 6'-3" post spacing) may be advisable.
9. Where placement of dike is required with guard railing installations, see Revised Standard Plan RSP A77C4 for dike positioning details.
10. The 15:1 or flatter flare used with buried end anchors is based on the edge of the paved shoulder or offset line of edge of the traveled way. The length of guard railing within the 15:1 or flatter flare is based on site conditions and should be a length equal to multiples of 12'-6".
11. For details of the buried post end anchor used with Type 11I Layout, see Standard Plan A77I2.
12. For typical flare offsets for 25'-0" length parabola with maximum offset of 1'-0", see Revised Standard Plan RSP A77E1.

STATE OF CALIFORNIA
DEPARTMENT OF TRANSPORTATION

METAL BEAM GUARD RAILING TYPICAL LAYOUTS FOR EMBANKMENTS

NO SCALE

RSP A77E5 DATED JUNE 6, 2008 SUPERSEDES STANDARD PLAN A77E5 DATED MAY 1, 2006 - PAGE 52 OF THE STANDARD PLANS BOOK DATED MAY 2006.

REVISED STANDARD PLAN RSP A77E5

2006 REVISED STANDARD PLAN RSP A77E5

12-10-07

DIST	COUNTY	ROUTE	POST MILES TOTAL PROJECT	SHEET NO.	TOTAL SHEETS
12	Ora	241	15.5/39.0	82	117

Randell D. Hiatt
REGISTERED CIVIL ENGINEER

June 6, 2008
PLANS APPROVAL DATE

REGISTERED PROFESSIONAL ENGINEER
Randell D. Hiatt
No. C50200
Exp. 6-30-09
CIVIL
STATE OF CALIFORNIA

The State of California or its officers or agents shall not be responsible for the accuracy or completeness of electronic copies of this plan sheet.

To accompany plans dated 10-18-10

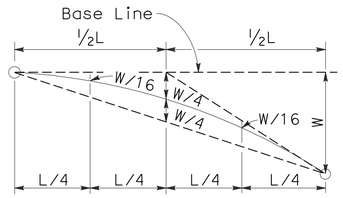

TYPICAL PARABOLIC LAYOUT

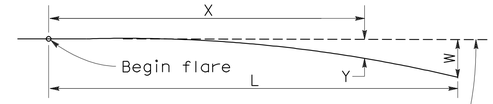

Base Line (Edge of paved shoulder or offset line of edge of traveled way)

$$Y = \frac{WX^2}{L^2}$$

Y = Offset from base line
W = Maximum offset
X = Distance along base line
L = Length of flare

PARABOLIC FLARE OFFSETS

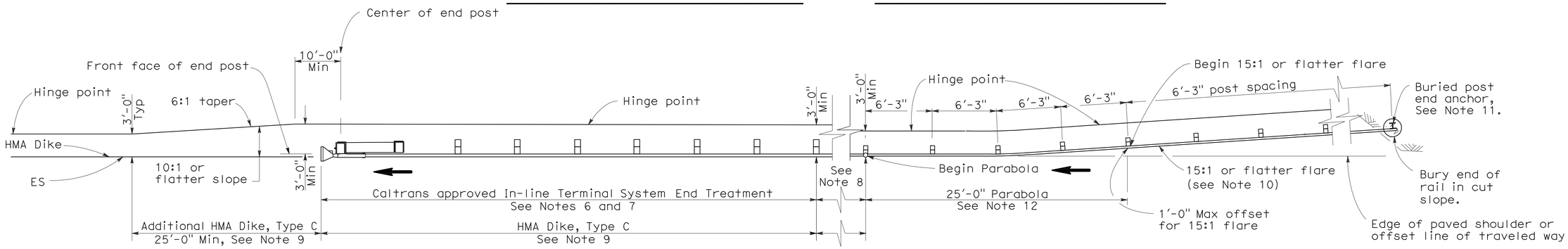

TYPE 11K LAYOUT

(EMBANKMENT GUARD RAILING INSTALLATION WITH A BURIED END ANCHOR TREATMENT AND AN IN-LINE END TREATMENT AT THE ENDS OF RAILING)
See Note 5

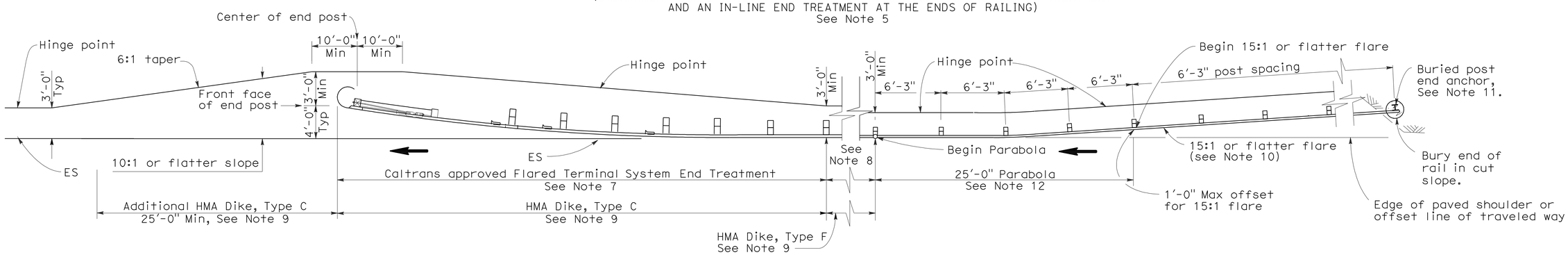

TYPE 11L LAYOUT

(EMBANKMENT GUARD RAILING INSTALLATION WITH A BURIED END ANCHOR TREATMENT AND A FLARED END TREATMENT AT THE ENDS OF RAILING)
See Note 5

NOTES:

1. Line post, blocks and hardware to be used are shown on Standard Plans A77A1, A77A2, A77B1, A77C1 and A77C2.
2. Guard rail post spacing to be 6'-3" center to center, except as otherwise noted.
3. Except as noted, line posts are 6" x 8" x 6'-0" wood with 6" x 8" x 1'-2" wood blocks. W6 x 9 steel posts, 6'-0" in length, with 6" x 8" x 1'-2" notched wood blocks or plastic blocks may be used for 6" x 8" x 6'-0" wood post with 6" x 8" x 1'-2" wood blocks where applicable and when specified.
4. Direction of adjacent traffic indicated by ⟶.
5. Layout Types 11D through 11L, shown on the A77E Series of Revised Standard Plans, are typically used where guard railing is recommended to shield embamkment slopes and a crashworthy end treatment is required for both directions of traffic.
6. In-line Terminal System End Treatments are used where site conditions will not accommodate a flared end treatment.
7. The type of terminal system end treatment to be used will be shown on the Project Plans.
8. Dependent on site conditions (embankment height and side slope), construction of additional guard railing (length equal to multiples of 12'-6" with 6'-3" post spacing) may be advisable.
9. Where placement of dike is required with guard railing installations, see Revised Standard Plan RSP A77C4 for dike positioning details.
10. The 15:1 or flatter flare used with buried end anchors is based on the edge of the paved shoulder or offset line of edge of the traveled way. The length of guard railing within the 15:1 or flatter flare is based on site conditions and should be a length equal to multiples of 12'-6".
11. For details of the buried post end anchor used with Type 11K and 11L Layouts, see Standard Plan A77I2.
12. For typical flare offsets for 25'-0" length parabola with maximum offset of 1'-0", see Revised Standard Plan RSP A77E1.

STATE OF CALIFORNIA
DEPARTMENT OF TRANSPORTATION

METAL BEAM GUARD RAILING TYPICAL LAYOUTS FOR EMBANKMENTS

NO SCALE

RSP A77E6 DATED JUNE 6, 2008 SUPERSEDES STANDARD PLAN A77E6
DATED MAY 1, 2006 - PAGE 53 OF THE STANDARD PLANS BOOK DATED MAY 2006.

REVISED STANDARD PLAN RSP A77E6

2006 REVISED STANDARD PLAN RSP A77E6

12-10-07

DIST	COUNTY	ROUTE	POST MILES TOTAL PROJECT	SHEET NO.	TOTAL SHEETS
12	Ora	241	15.5/39.0	83	117

Randell D. Hiatt
REGISTERED CIVIL ENGINEER

June 6, 2008
PLANS APPROVAL DATE

REGISTERED PROFESSIONAL ENGINEER
Randell D. Hiatt
No. C50200
Exp. 6-30-09
CIVIL
STATE OF CALIFORNIA

The State of California or its officers or agents shall not be responsible for the accuracy or completeness of electronic copies of this plan sheet.

To accompany plans dated 10-18-10

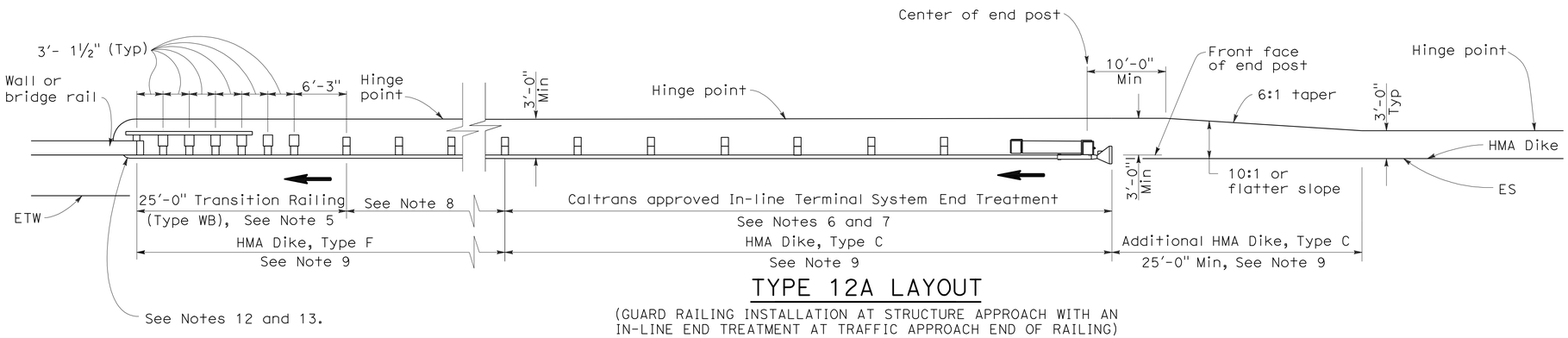

TYPE 12A LAYOUT

(GUARD RAILING INSTALLATION AT STRUCTURE APPROACH WITH AN IN-LINE END TREATMENT AT TRAFFIC APPROACH END OF RAILING)
See Notes 10

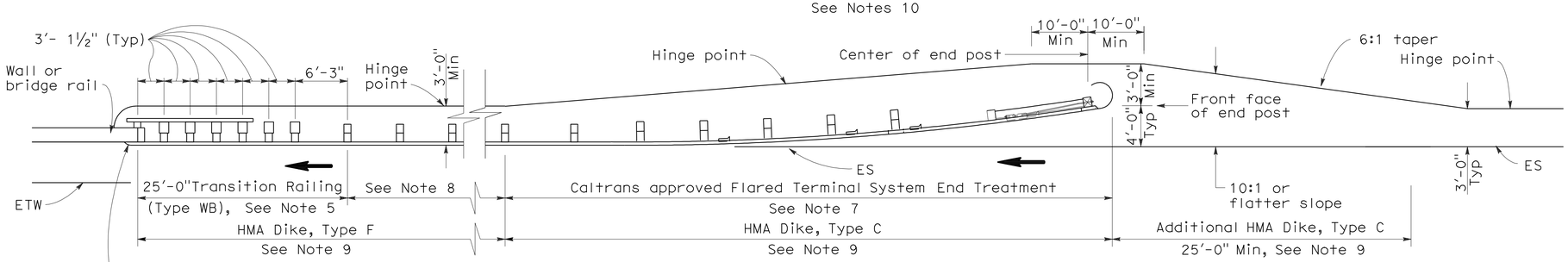

TYPE 12B LAYOUT

(GUARD RAILING INSTALLATION AT STRUCTURE APPROACH WITH A FLARED END TREATMENT AT TRAFFIC APPROACH END OF RAILING)
See Notes 10

NOTES:

1. Line post, blocks and hardware to be used are shown on Standard Plans A77A1, A77A2, A77B1, A77C1 and A77C2.
2. Guard rail post spacing to be 6'-3" center to center, except as otherwise noted.
3. Except as noted, line posts are 6" x 8" x 6'-0" wood with 6" x 8" x 1'-2" wood blocks. W6 x 9 steel posts, 6'-0" in length, with 6" x 8" x 1'-2" notched wood blocks or plastic blocks may be used for 6" x 8" x 6'-0" wood posts with 6" x 8" x 1'-2" wood blocks where applicable and when specified.
4. Direction of adjacent traffic indicated by ➡.
5. For Transition Railing (Type WB) details for Types 12A and 12B Layouts, see Standard Plan A77J4.
6. In-line Terminal System End Treatments are used where site conditions will not accommodate a flared end treatment.
7. The type of terminal system end treatment to be used will be shown on the Project Plans.
8. Dependent on site conditions (embankment height, side slopes, or other fixed objects), it may be advisable to construct additional guard railing (a length equal to multiples of 12'-6" with 6'-3" post spacing) between the transition railing and end treatment.
9. Where placement of dike is required with guard railing installations, see Revised Standard Plan RSP A77C4 for dike positioning details.
10. Type 12A or Type 12B Layouts are typically used:
    a. To the right of approaching traffic, at the end of a structure, on two-lane conventional highway where the roadbed width across the structure is less than 40 feet.
    b. To the left of approaching traffic, at the end of a structure, on two-lane conventional highway where the roadbed width across the structure is less than 40 feet.
    c. To the right of approaching traffic at the end of each structure on multilane freeways or expressways with separate adjacent or parallel bridges.
    d. To the right of approaching traffic at the end of the structure on multilane freeways or expressways with decked median on the bridge.
11. See Revised Standard Plan RSP A77F3 for typical layout used left of approaching traffic at the ends of each structure on multilane freeways or expressways with separate adjacent or parallel bridges.
12. For additional details of typical connections to bridge rail, see Connection Detail AA on Revised Standard Plans RSP A77J1 and RSP A77J2 and Connection Detail FF on Standard Plans A77K1 and A77K2.
13. For additional details of a typical connection to walls or abutments, see Standard Plan A77J3.

STATE OF CALIFORNIA
DEPARTMENT OF TRANSPORTATION

METAL BEAM GUARD RAILING TYPICAL LAYOUTS FOR STRUCTURE APPROACH

NO SCALE

RSP A77F1 DATED JUNE 6, 2008 SUPERSEDES STANDARD PLAN A77F1
DATED MAY 1, 2006 - PAGE 54 OF THE STANDARD PLANS BOOK DATED MAY 2006.

REVISED STANDARD PLAN RSP A77F1

2006 REVISED STANDARD PLAN RSP A77F1

DIST	COUNTY	ROUTE	POST MILES TOTAL PROJECT	SHEET NO.	TOTAL SHEETS
12	Ora	241	15.5/39.0	84	117

Randell D. Hiatt
REGISTERED CIVIL ENGINEER

June 6, 2008
PLANS APPROVAL DATE

REGISTERED PROFESSIONAL ENGINEER
Randell D. Hiatt
No. C50200
Exp. 6-30-09
CIVIL
STATE OF CALIFORNIA

The State of California or its officers or agents shall not be responsible for the accuracy or completeness of electronic copies of this plan sheet.

To accompany plans dated 10-18-10

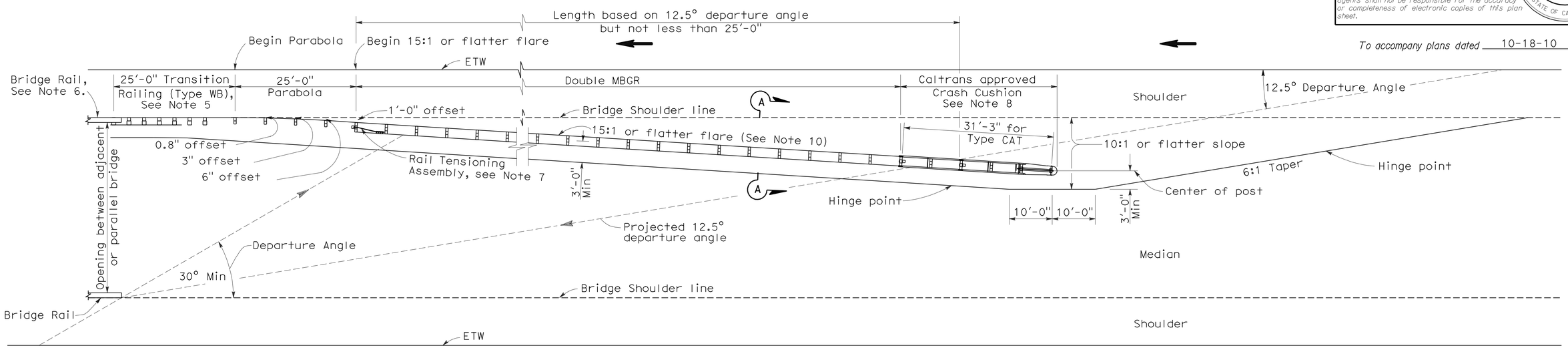

TYPE 12E LAYOUT

See Note 10

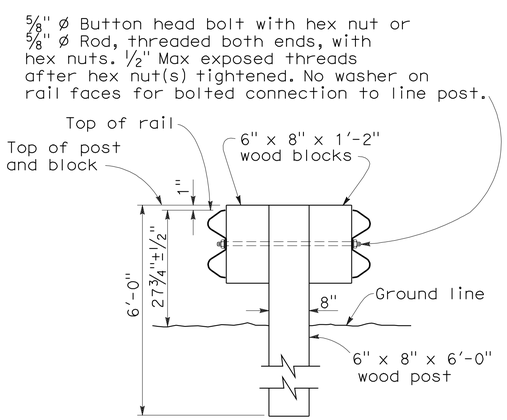

SECTION A-A

TYPICAL DOUBLE METAL BEAM GUARD RAILING

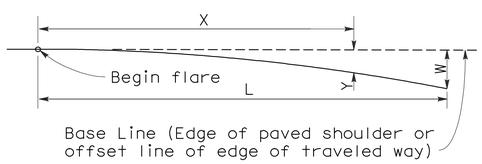

$$Y = \frac{WX^2}{L^2}$$

Y = Offset from base line
W = Maximum offset
X = Distance along base line
L = Length of flare

PARABOLIC FLARE OFFSETS

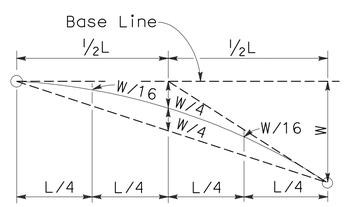

TYPICAL PARABOLIC LAYOUT

NOTES:

1. Line post, blocks and hardware to be used are shown on Standard Plans A77A1, A77A2, A77B1, A77C1 and A77C2.
2. Guard railing post spacing to be 6'-3" center to center, except as otherwise noted.
3. Except as noted, line posts are 6" x 8" x 6'-0" wood with 6" x 8" x 1'-2" wood blocks. W6 x 9 steel posts, 6'-0" in length, with 6" x 8" x 1'-2" notched wood blocks or notched recycled plastic blocks may be used for 6" x 8" x 6'-0" wood line posts with 6" x 8" x 1'-2" wood blocks where applicable and when specified.
4. Direction of adjacent traffic indicated by ⟶.
5. For Transition Railing (Type WB) details, see Standard Plan A77J4.
6. For additional details of a typical connection to bridge rail, see Connection Detail AA on Revised Standard Plan RSP A77J1.
7. For Rail Tensioning Assembly details, see Standard Plan A77H2.
8. The type of Crash Cushion to be used will be shown on the Project Plans.
9. Type 12E Layout is typically used left of approaching traffic at the end of each structure on multilane freeways or expressways where a median type barrier is not constructed between separated roadbeds.
10. The 15:1 or flatter flare is measured off of the edge of traveled way.

STATE OF CALIFORNIA
DEPARTMENT OF TRANSPORTATION

METAL BEAM GUARD RAILING TYPICAL LAYOUTS FOR STRUCTURE APPROACH

NO SCALE

RSP A77F3 DATED JUNE 6, 2008 SUPERSEDES STANDARD PLAN A77F3
DATED MAY 1, 2006 - PAGE 56 OF THE STANDARD PLANS BOOK DATED MAY 2006.

REVISED STANDARD PLAN RSP A77F3

2006 REVISED STANDARD PLAN RSP A77F3

12-10-07

DIST	COUNTY	ROUTE	POST MILES TOTAL PROJECT	SHEET NO.	TOTAL SHEETS
12	Ora	241	15.5/39.0	85	117

Randell D. Hiatt
REGISTERED CIVIL ENGINEER

June 6, 2008
PLANS APPROVAL DATE

REGISTERED PROFESSIONAL ENGINEER
Randell D. Hiatt
No. C50200
Exp. 6-30-09
CIVIL
STATE OF CALIFORNIA

The State of California or its officers or agents shall not be responsible for the accuracy or completeness of electronic copies of this plan sheet.

To accompany plans dated 10-18-10

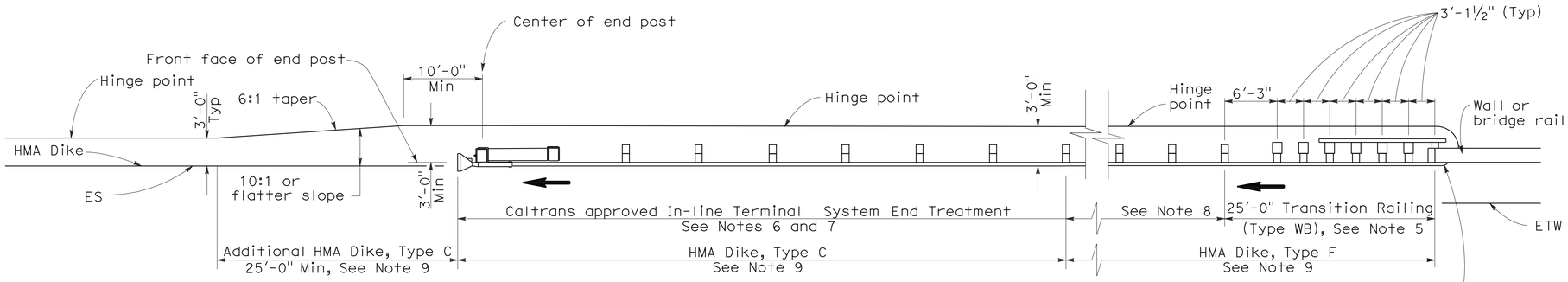

TYPE 12AA LAYOUT

(GUARD RAILING INSTALLATION AT STRUCTURE DEPARTURE WITH AN IN-LINE END TREATMENT AT TRAILING END OF RAILING)
See Notes 9 and 10

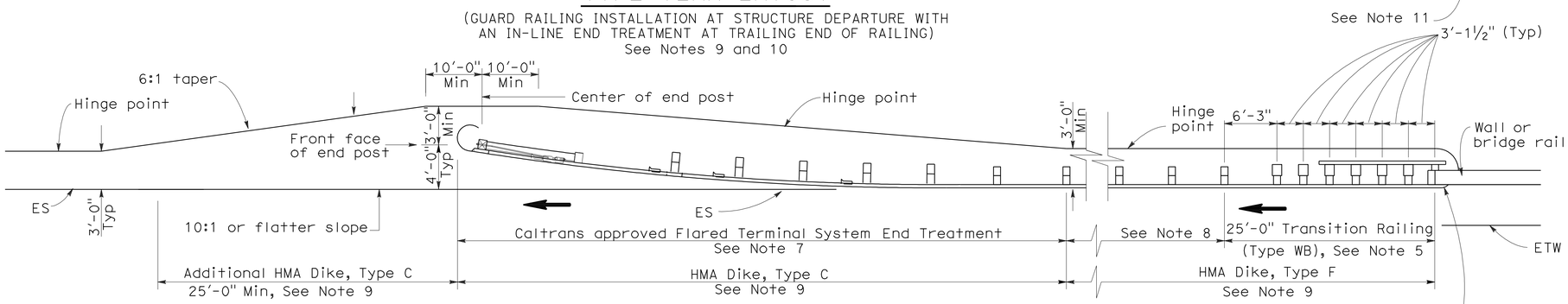

TYPE 12BB LAYOUT

(GUARD RAILING INSTALLATION AT STRUCTURE DEPARTURE WITH A FLARED END TREATMENT AT TRAILING END OF RAILING)
See Notes 9 and 10

NOTES:

1. Line post, blocks and hardware to be used are shown on Standard Plans A77A1, A77A2, A77B1, A77C1 and A77C2.
2. Guard rail post spacing to be 6'-3" center to center, except as otherwise noted.
3. Except as noted, line posts are 6" x 8" x 6'-0" wood with 6" x 8" x 1'-2" wood blocks. W6 x 9 steel posts, 6'-0" in length, with 6" x 8" x 1-2" notched wood blocks or notched recycled plastic blocks may be used for 6" x 8" x 6'-0" wood posts with 6" x 8" x 1'-2" wood blocks where applicable and when specified.
4. Direction of adjacent traffic indicated by ⟶.
5. For Transition Railing (Type WB) details for Types 12AA and 12BB Layouts, see Standard Plan A77J4.
6. In-line Terminal System Treatments are used where site conditions will not accommodate a flared end treatment.
7. The type of terminal system to be used will be shown on the Project Plans.
8. Dependent on site conditions (embankment height, side slopes, other fixed objects), it may be advisable to construct additional guard railing (a length equal to multiples of 12'-6" with 6'-3" post spacing) between the transition railing and end treatments.
9. Where placement of dike is required with guard railing installations, see Revised Standard Plan RSP A77C4 for dike positioning details.
10. Type 12AA or Type 12BB Layouts are typically used to the right of traffic departing a structure on two-way conventional highways where the roadbed width across the structure is less than 40 feet.
11. For additional details of typical connections to bridge rail, see Connection Detail CC on Revised Standard Plan RSP A77J2 and Connection Detail HH on Standard Plans A77k2.

STATE OF CALIFORNIA
DEPARTMENT OF TRANSPORTATION

METAL BEAM GUARD RAILING TYPICAL LAYOUTS FOR STRUCTURE DEPARTURE

NO SCALE

RSP A77F4 DATED JUNE 6, 2008 SUPERSEDES STANDARD PLAN A77F4
DATED MAY 1, 2006 - PAGE 57 OF THE STANDARD PLANS BOOK DATED MAY 2006.

REVISED STANDARD PLAN RSP A77F4

2006 REVISED STANDARD PLAN RSP A77F4

DIST	COUNTY	ROUTE	POST MILES TOTAL PROJECT	SHEET NO.	TOTAL SHEETS
12	Ora	241	15.5/39.0	86	117

Randell D. Hiatt
REGISTERED CIVIL ENGINEER

June 6, 2008
PLANS APPROVAL DATE

REGISTERED PROFESSIONAL ENGINEER
Randell D. Hiatt
No. C50200
Exp. 6-30-09
CIVIL
STATE OF CALIFORNIA

The State of California or its officers or agents shall not be responsible for the accuracy or completeness of electronic copies of this plan sheet.

To accompany plans dated 10-18-10

NOTES:

1. Line post, blocks and hardware to be used are shown on Standard Plans A77A1, A77A2, A77B1, A77C1 and A77C2.
2. Guard railing post spacing to be 6'-3" center to center, except as otherwise noted.
3. Except as noted, line posts are 6" x 8" x 6'-0" wood with 6" x 8" x 1'-2" wood blocks. W6 x 9 steel posts, 6'-0" in length, with 6" x 8" x 1'-2" notched wood blocks or notched recycled plastic blocks may be used for 6" x 8" x 6'-0" wood line posts with 6" x 8" x 1'-2" wood blocks where applicable and when specified.
4. A 4'-0" minimum clearance is required between the face of the railing and the face of a fixed object located directly behind standard guard railing sections with post spacing of 6'-3". Construct guard railing as shown in the detail "Strengthened Railing Sections for Fixed Objects" on this plan, where the clearance between the face of the railing and the face of a fixed object is less than 4'-0", but not less than 2'-3". Where the clearance is less than 2'-3", a concrete wall or barrier should be constructed to shield the fixed object(s).
5. Direction of adjacent traffic indicated by ⟶.
6. For End Anchor Assembly (Type SFT) details, see Standard Plan A77H1.
7. For details of Rail Tensioning Assembly, see Standard Plan A77H2.
8. The type of crash cushion to be used will be shown on the Project Plans.
9. Type 14A layout is typically used on multilane freeways or expressways to shield fixed objects where a median type barrier is not constructed between the separated roadbeds.
10. For typical flare offsets for 25'-0" length parabola with maximum offset of 1'-0", see Revised Standard Plan RSP A77E1.
11. The 15:1 or flatter flare is measured off of the edge of traveled way.
12. W6 x 15 steel post, 8'-0" in length, with 8" x 8" x 1'-2" notched wood block or notched recycled plastic block may be used in place of the 10" x 10" x 8'-0" wood post with 8" x 8" x 1'-2" wood block shown in the "Strengthened Railing Sections Detail".

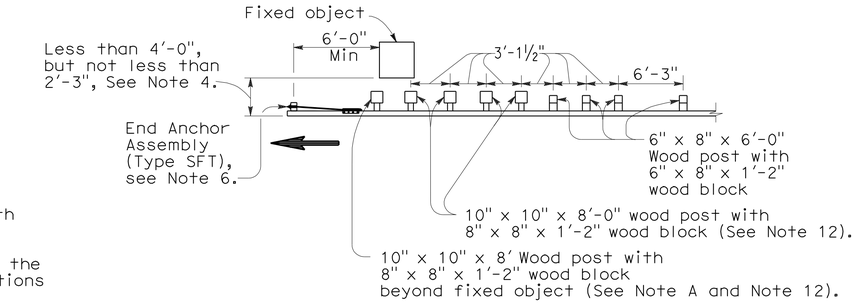

NOTE A: For a series of fixed objects (bridge columns, overhead sign supports, etc.) additional 10" x 10" x 8'-0" wood post with 8" x 8" x 1'-2" wood blocks at 3'-1½" center to center spacing are to be used between fixed objects.

STRENGTHENED RAILING SECTIONS FOR FIXED OBJECT

Use strengthened railing sections with Type 14A layout where minimum clearance between the face of the guard railing and fixed object(s) is less than 4'-0", but not less than 2'-3", See Note 4.

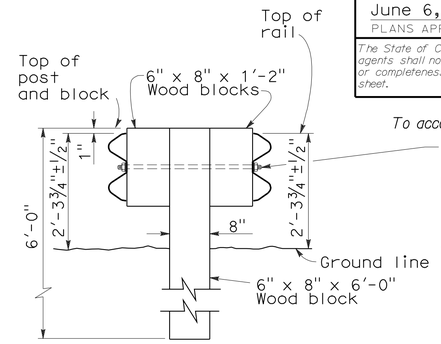

SECTION A-A
TYPICAL DOUBLE METAL BEAM GUARD RAILING

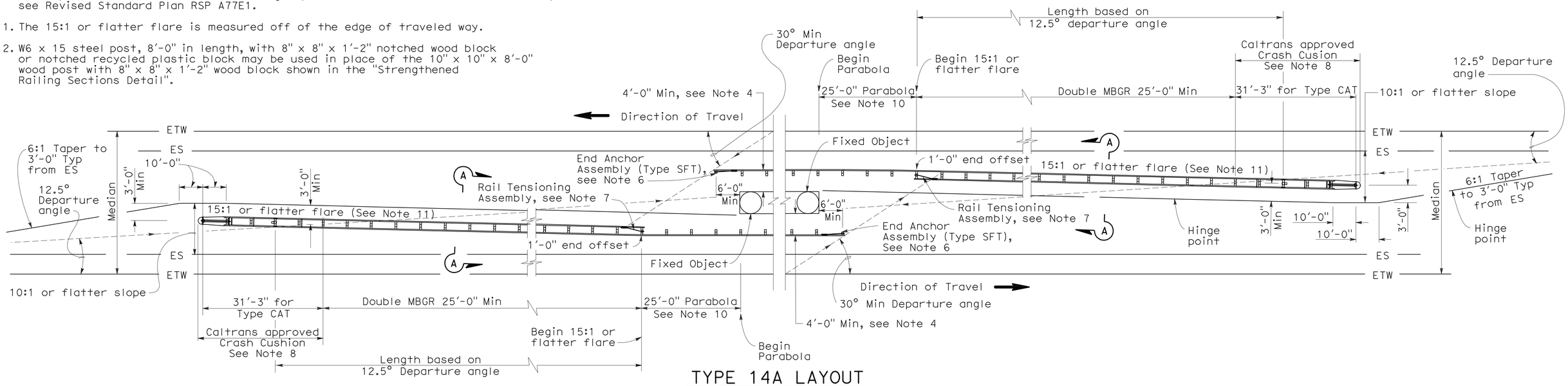

TYPE 14A LAYOUT

See Note 9

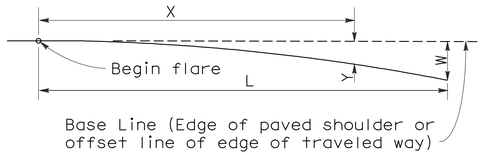

$$Y = \frac{WX^2}{L^2}$$

Y = Offset from base line
W = Maximum offset
X = Distance along base line
L = Length of flare

PARABOLIC FLARE OFFSETS

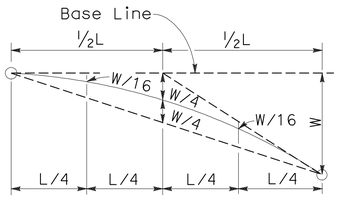

TYPICAL PARABOLIC LAYOUT

STATE OF CALIFORNIA
DEPARTMENT OF TRANSPORTATION

METAL BEAM GUARD RAILING TYPICAL LAYOUTS FOR FIXED OBJECTS BETWEEN SEPARATE ROADBEDS (TWO-WAY TRAFFIC)

NO SCALE

RSP A77G1 DATED JUNE 6, 2008 SUPERSEDES STANDARD PLAN A77G1 DATED MAY 1, 2006 - PAGE 59 OF THE STANDARD PLANS BOOK DATED MAY 2006.

REVISED STANDARD PLAN RSP A77G1

2006 REVISED STANDARD PLAN RSP A77G1

12-10-07

DIST	COUNTY	ROUTE	POST MILES TOTAL PROJECT	SHEET NO.	TOTAL SHEETS
12	Ora	241	15.5/39.0	87	117

Randell D. Hiatt
REGISTERED CIVIL ENGINEER

June 6, 2008
PLANS APPROVAL DATE

REGISTERED PROFESSIONAL ENGINEER
Randell D. Hiatt
No. C50200
Exp. 6-30-09
CIVIL
STATE OF CALIFORNIA

The State of California or its officers or agents shall not be responsible for the accuracy or completeness of electronic copies of this plan sheet.

To accompany plans dated 10-18-10

NOTES:

1. Line post, blocks and hardware to be used are shown on Standard Plans A77A1, A77A2, A77B1, A77C1 and A77C2.
2. Guard railing post spacing to be 6′-3″ center to center, except as otherwise noted.
3. Except as noted, line posts are 6″ x 8″ x 6′-0″ wood with 6″ x 8″ x 1′-2″ wood blocks. W6 x 9 steel posts, 6′-0″ in length, with 6″ x 8″ x 1′-2″ notched wood blocks or notched recycled plastic blocks may be used for 6″ x 8″ x 6′-0″ wood line posts with 6″ x 8″ x 1′-2″ wood blocks where applicable and when specified.
4. A 4′-0″ minimum clearance is required between the face of the railing and the face of a fixed object located directly behind standard guard railing section with post spacing of 6′-3″. Construct guard railing as shown in the detail "Strengthened Railing Sections for Fixed Objects" on this plan, where the clearance between the face of the railing and the face of a fixed object is less than 4′-0″, but not less than 2′-3″. Where the clearance is less than 2′-3″, a concrete wall or barrier should be constructed to shield the fixed object(s).
5. Direction of adjacent traffic indicated by ➡.
6. For End Anchor Assembly (Type SFT) details, see Standard Plan A77H1.
7. Type of crash cushion to be used will be shown on the Project Plans.
8. Type 15A layout is typically used on multilane freeways or expressways to shield fixed objects in the area between separated one-way roadbeds.
9. For typical flare offsets for 25′-0″ length parabola with maximum offset of 1′-0″, see Revised Standard Plan RSP A77E1.
10. The 15:1 or flatter flare is measured off of the edge of the traveled way.
11. W6 x 15 steel post, 8′-0″ in length, with 8″ x 8″ x 1′-2″ notched wood block or notched recycled plastic blocks may be used in place of the 10″ x 10″ x 8′-0″ wood post with 8″ x 8″ x 1′-2″ wood block shown in the "Strengthened Railing Sections Detail".

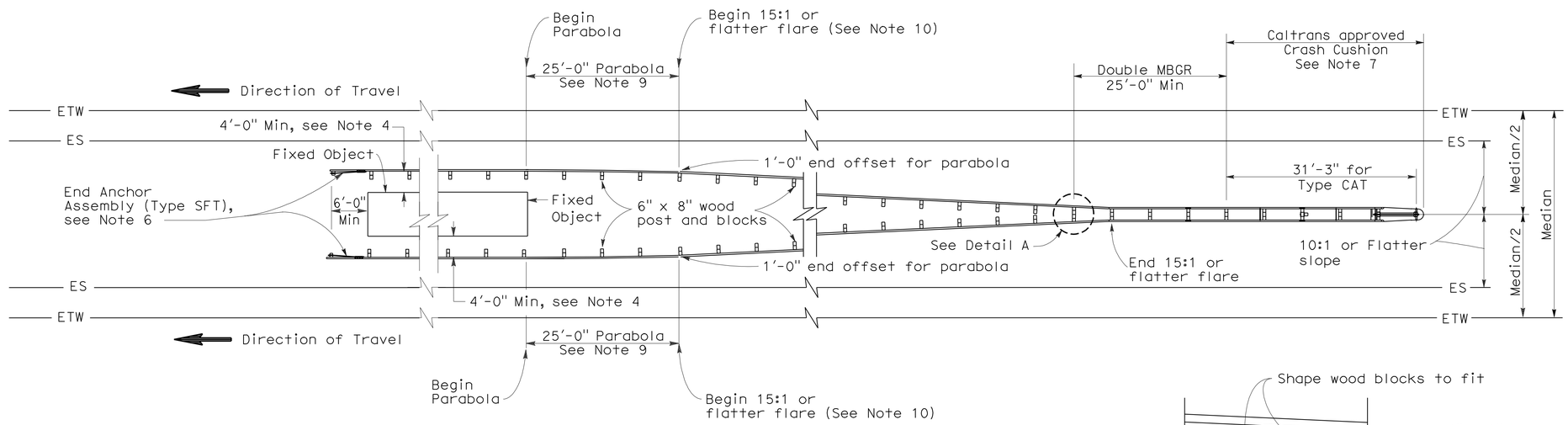

TYPE 15A LAYOUT

See Note 9

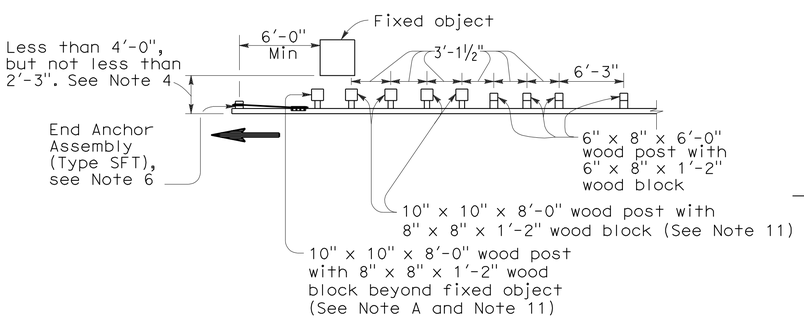

NOTE A: For a series of fixed objects (bridge columns, overhead sign supports, etc.) additional 10″ x 10″ x 8′-0″ wood post with 8″ x 8″ x 1′-2″ wood blocks at 3′-1½″ center to center spacing are to be used between fixed objects.

STRENGTHENED RAILING SECTIONS FOR FIXED OBJECT

Use strengthened railing sections with Type 15A layout where minimum clearance between the face of the guard railing and the fixed object(s) is less than 4′-0″, but not less than 2′-3″. See Note 4.

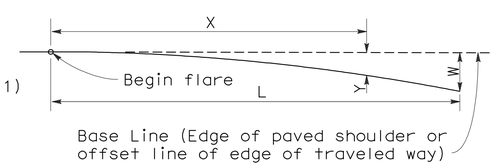

$$Y = \frac{WX^2}{L^2}$$

Y = Offset from base line
W = Maximum offset
X = Distance along base line
L = Length of flare

PARABOLIC FLARE OFFSETS

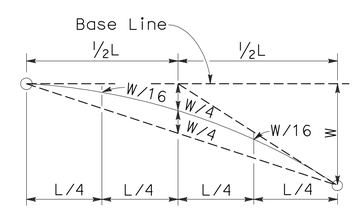

TYPICAL PARABOLIC LAYOUT

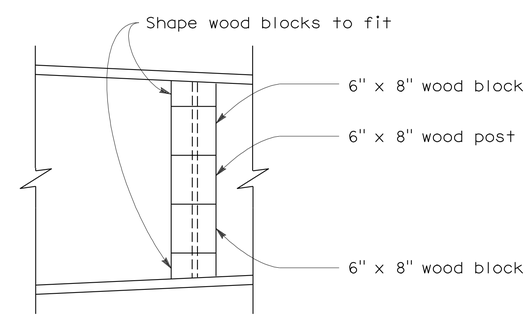

DETAIL A

STATE OF CALIFORNIA
DEPARTMENT OF TRANSPORTATION

METAL BEAM GUARD RAILING TYPICAL LAYOUTS FOR FIXED OBJECTS BETWEEN SEPARATE ROADBEDS (ONE-WAY TRAFFIC)

NO SCALE

RSP A77G2 DATED JUNE 6, 2008 SUPERSEDES STANDARD PLAN A77G2
DATED MAY 1, 2006 - PAGE 60 OF THE STANDARD PLANS BOOK DATED MAY 2006.

REVISED STANDARD PLAN RSP A77G2

2006 REVISED STANDARD PLAN RSP A77G2

12-10-07

DIST	COUNTY	ROUTE	POST MILES TOTAL PROJECT	SHEET NO.	TOTAL SHEETS
12	Ora	241	15.5/39.0	88	117

Randell D. Hiatt
REGISTERED CIVIL ENGINEER

June 6, 2008
PLANS APPROVAL DATE

REGISTERED PROFESSIONAL ENGINEER
Randell D. Hiatt
No. C50200
Exp. 6-30-09
CIVIL
STATE OF CALIFORNIA

The State of California or its officers or agents shall not be responsible for the accuracy or completeness of electronic copies of this plan sheet.

To accompany plans dated 10-18-10

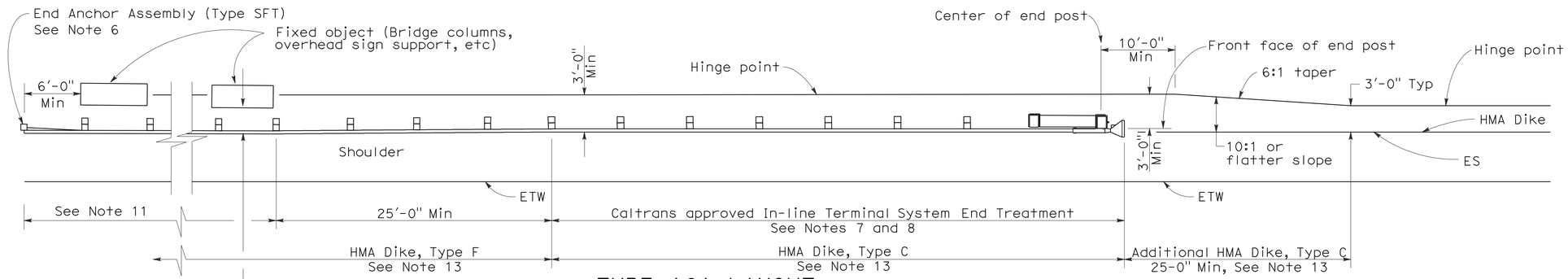

TYPE 16A LAYOUT

(GUARD RAILING INSTALLATION AT ROADSIDE FIXED OBJECT OR OBJECTS WITH AN IN-LINE END TREATMENT AT TRAFFIC APPROACH END OF RAILING)
See Notes 12 and 13

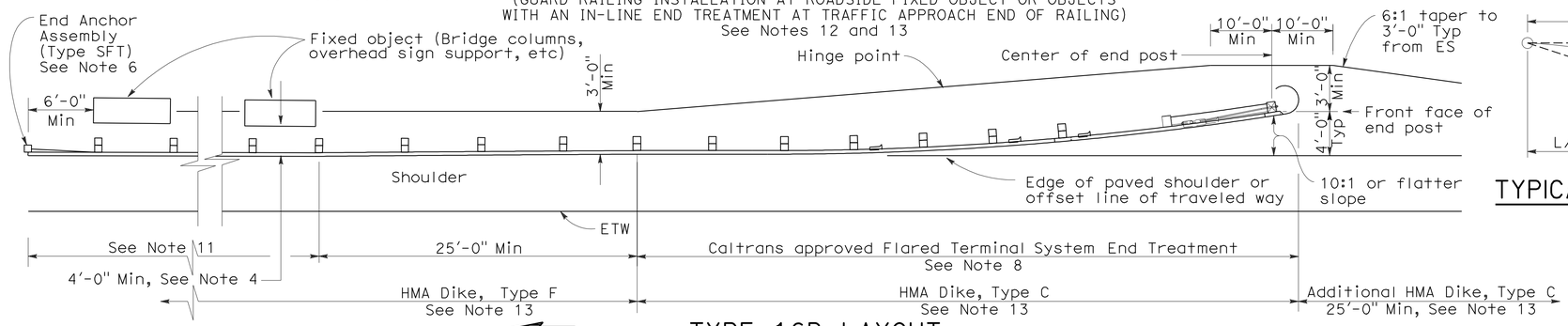

TYPE 16B LAYOUT

(GUARD RAILING INSTALLATION AT ROADSIDE FIXED OBJECT OR OBJECTS WITH A FLARED END TREATMENT AT TRAFFIC APPROACH END OF RAILING)
See Notes 12 and 13

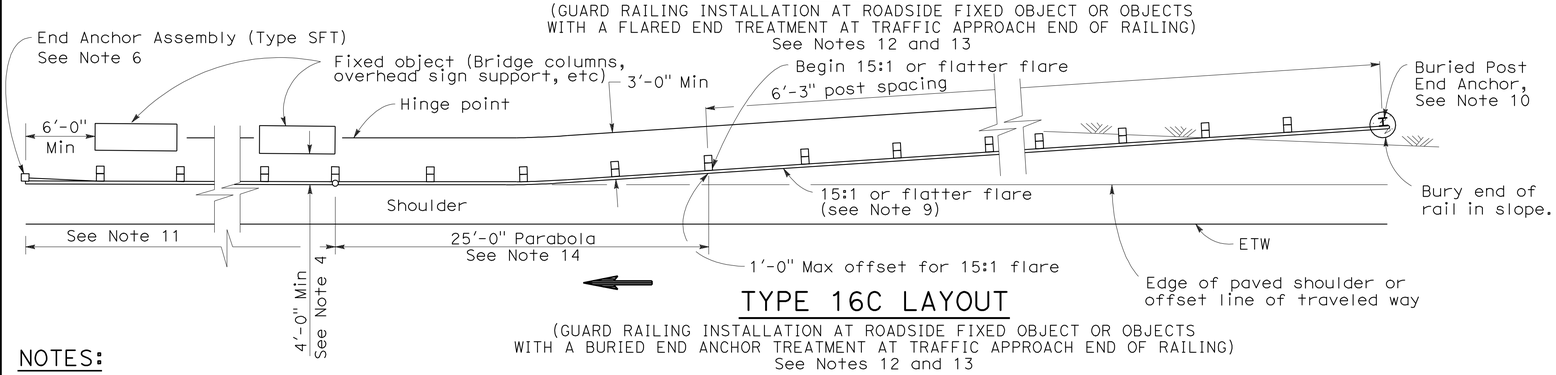

TYPE 16C LAYOUT

(GUARD RAILING INSTALLATION AT ROADSIDE FIXED OBJECT OR OBJECTS WITH A BURIED END ANCHOR TREATMENT AT TRAFFIC APPROACH END OF RAILING)
See Notes 12 and 13

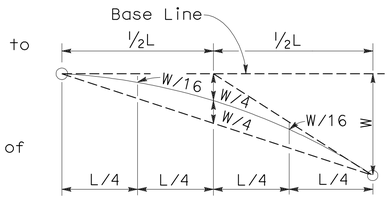

TYPICAL PARABOLIC LAYOUT

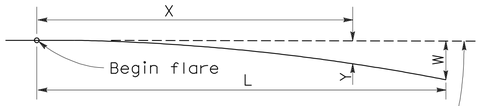

Base Line (Edge of paved shoulder or offset line of edge of traveled way)

$$Y = \frac{WX^2}{L^2}$$

Y = Offset from base line
W = Maximum offset
X = Distance along base line
L = Length of flare

PARABOLIC FLARE OFFSETS

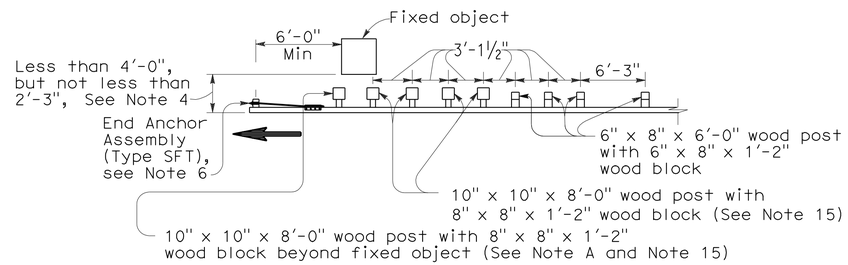

NOTE A: For a series of fixed objects (bridge columns, overhead sign supports, etc.) additional 10" x 10" x 8'-0" wood post with 8" x 8" x 1'-2" wood blocks at 3'-1½" center to center spacing are to be used between fixed objects.

STRENGTHENED RAILING SECTIONS FOR FIXED OBJECT

Use strengthened railing sections with Types 16A, 16B or 16C Layouts where minimum clearance between the face of the guard railing and fixed object(s) is less than 4'-0", but not less than 2'-3". See Note 4

NOTES:

1. Line post, blocks and hardware to be used are shown on Revised Standard Plans A77A1, A77A2, A77B1, A77C1 and A77C2.
2. Guard railing post spacing to be 6'-3" center to center, except as otherwise noted.
3. Except as noted, line posts are 6" x 8" x 6'-0" wood with 6" x 8" x 1'-2" wood blocks. W6 x 9 steel posts, 6'-0" in length, with 6" x 8" x 1'-2" notched wood blocks or notched recycled plastic blocks may be used for 6" x 8" x 6'-0" wood line posts with 6" x 8" x 1'-2" wood blocks where applicable and when specified.
4. A 4'-0" minimum clearance is required between the face of the railing and the face of a fixed object located directly behind standard guard railing sections with post spacing of 6'-3". Construct guard railing as shown in the detail "Strengthened Railing Sections for Fixed Objects" on this plan, where the clearance between the face of the railing and the face of a fixed object is less than 4'-0", but not less than 2'-3". Where the clearance is less than 2'-3", a concrete wall or barrier should be constructed to shield the fixed object(s).
5. Direction of adjacent traffic indicated by ⟶.
6. For End Anchor Assembly (Type SFT) details, see Standard Plan A77H1.
7. In-line Terminal System End Treatments are used where site conditions will not accommodate a flared end treatment.
8. The type of terminal system to be used will be shown on the Project Plans.
9. The 15:1 or flatter flare used with Type 16C Layout is based on the edge of the paved shoulder or offset line of edge of the traveled way. The length of guard railing within the 15:1 or flatter flare is based on site conditions and should be a length equal to multiples of 12'-6".
10. For details of the Buried Post End Anchor used with Type 16C Layout, see Standard Plan A77I2.
11. As site conditions dictate, construct additional guard railing to shield fixed object(s). Additional guard railing length equal to multiples of 12'-6". Post spacing at 6'-3" except as specified in Note 4.
12. Layout Types 16A, 16B or 16C are typically used where guard railing is recommended to shield roadside fixed object(s) and a crashworthy end treatment is required for only one direction of traffic.
13. Where placement of dike is required with guard railing, see Revised Standard Plan RSP A77C4 for dike positioning details.
14. For typical flare offsets for 25'-0" length parabola with maximum offset of 1'-0", see Revised Standard Plan RSP A77E1.
15. W6 x 15 steel post, 8'-0" in length, with 8" x 8" x 1'-2" notched wood block or notched recycled plastic blocks may be used in place of the 10" x 10" x 8'-0" wood post with 8" x 8" x 1'-2" wood block shown in the "Strengthened Railing Sections Detail".

STATE OF CALIFORNIA
DEPARTMENT OF TRANSPORTATION

METAL BEAM GUARD RAILING TYPICAL LAYOUTS FOR ROADSIDE FIXED OBJECTS

NO SCALE

RSP A77G3 DATED JUNE 6, 2008 SUPERSEDES STANDARD PLAN A77G3 DATED MAY 1, 2006 - PAGE 61 OF THE STANDARD PLANS BOOK DATED MAY 2006.

REVISED STANDARD PLAN RSP A77G3

2006 REVISED STANDARD PLAN RSP A77G3

12-10-07

DIST	COUNTY	ROUTE	POST MILES TOTAL PROJECT	SHEET NO.	TOTAL SHEETS
12	Ora	241	15.5/39.0	89	117

Randell D. Hiatt
REGISTERED CIVIL ENGINEER

June 6, 2008
PLANS APPROVAL DATE

REGISTERED PROFESSIONAL ENGINEER
Randell D. Hiatt
No. C50200
Exp. 6-30-09
CIVIL
STATE OF CALIFORNIA

The State of California or its officers or agents shall not be responsible for the accuracy or completeness of electronic copies of this plan sheet.

To accompany plans dated 10-18-10

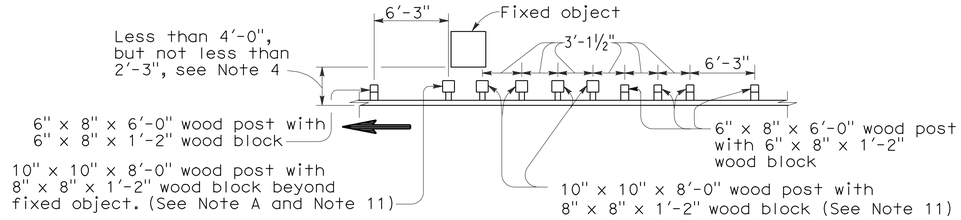

NOTE A: For a series of fixed objects (bridge columns, overhead sign supports, etc.) additional 10" x 10" x 8'-0" wood post with 8" x 8" x 1'-2" wood blocks at 3'-1½" center to center spacing are to be used between fixed object(s).

STRENGTHENED RAILING SECTIONS FOR FIXED OBJECT

Use strengthened railing sections with Layout Types 16D or 16E where minimum clearance between the guard railing and fixed object(s) is less than 4'-0", but not less than 2'-3". See Note 4.

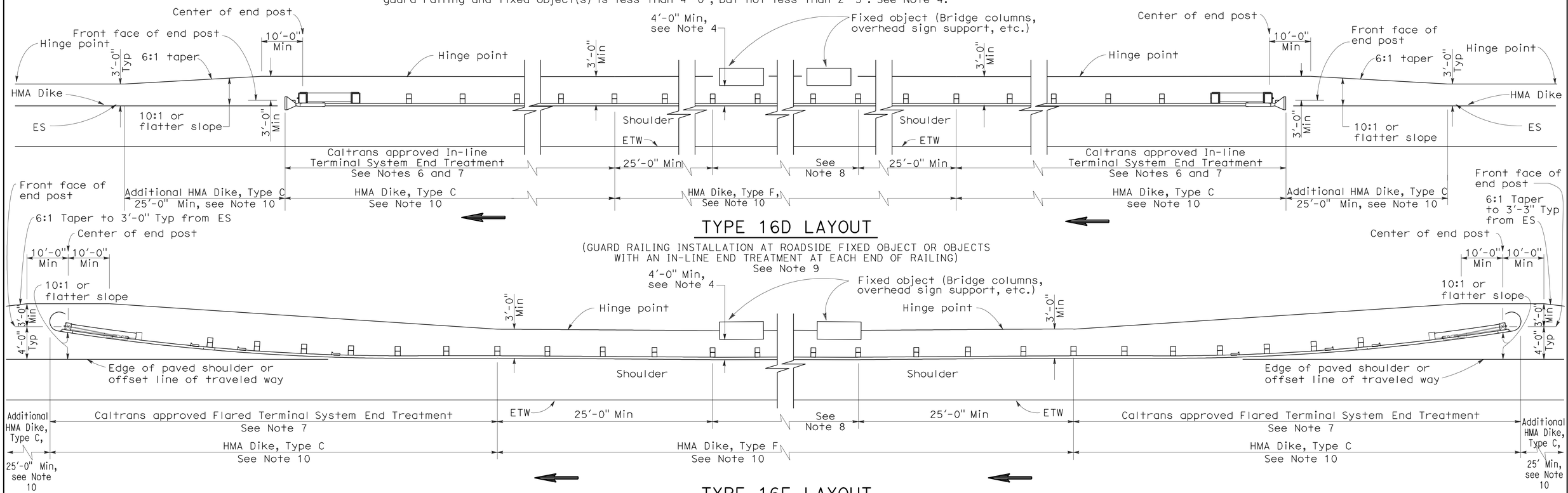

TYPE 16D LAYOUT

(GUARD RAILING INSTALLATION AT ROADSIDE FIXED OBJECT OR OBJECTS WITH AN IN-LINE END TREATMENT AT EACH END OF RAILING)
See Note 9

TYPE 16E LAYOUT

(GUARD RAILING INSTALLATION AT ROADSIDE FIXED OBJECT OR OBJECTS WITH A FLARED END TREATMENT AT EACH END OF RAILING)
See Note 9

NOTES:

1. Line post, blocks and hardware to be used are shown on Standard Plans A77A1, A77A2, A77B1, A77C1 and A77C2.
2. Guard railing post spacing to be 6'-3" center to center, except as otherwise noted.
3. Except as noted, line posts are 6" x 8" x 6'-0" wood with 6" x 8" x 1'-2" wood blocks. W6 x 9 steel posts, 6'-0" in length, with 6" x 8" x 1'-2" notched wood blocks or notched recycled plastic blocks may be used for 6" x 8" x 6'-0" wood line posts with 6" x 8" x 1'-2" wood blocks where applicable and when specified.
4. A 4'-0" minimum clearance is required between the face of the railing and the face of a fixed object located directly behind standard guard railing sections with post spacing at 6'-3". Construct guard railing as shown in the detail "Strengthened Railing Sections for Fixed Objects" on this plan, where the clearance between the face of the railing and the face of a fixed object is less than 4'-0", but not less than 2'-3". Where the clearance is less than 2'-3", a concrete wall or barrier should be constructed to shield the fixed object(s).
5. Direction of adjacent traffic indicated by ⟶ .
6. In-line Terminal System End Treatments are used where site conditions will not accommodate a flared end treatment.
7. The type of terminal system to be used will be shown on the Project Plans.
8. As site conditions dictate, construct additional guard railing to shield fixed object(s). Additional guard railing length equal to multiples of 12'-6". Post spacing at 6'-3", except as specified in Note 4.
9. Layout Types 16D through 16L, shown on the A77G Series of Revised Standard Plans, are typically used where guard railing is recommended to shield roadside fixed object(s) and a crashworthy end treatment is required for both directions of traffic.
10. Where placement of dike is required with guard railing, see Revised Standard Plan RSP A77C4 for dike positioning details.
11. W6 x 15 steel post, 8'-0" in length, with 8" x 8" x 1'-2" notched wood block or notched recycled plastic block may be used in place of the 10" x 10" x 8'-0" wood post with 8" x 8" x 1'-2" wood block shown in the "Strengthened Railing Sections Detail."

STATE OF CALIFORNIA
DEPARTMENT OF TRANSPORTATION

METAL BEAM GUARD RAILING TYPICAL LAYOUTS FOR ROADSIDE FIXED OBJECTS

NO SCALE

RSP A77G4 DATED JUNE 6, 2008 SUPERSEDES STANDARD PLAN A77G4
DATED MAY 1, 2006 - PAGE 62 OF THE STANDARD PLANS BOOK DATED MAY 2006.

REVISED STANDARD PLAN RSP A77G4

2006 REVISED STANDARD PLAN RSP A77G4

12-10-07

DIST	COUNTY	ROUTE	POST MILES TOTAL PROJECT	SHEET NO.	TOTAL SHEETS
12	Ora	241	15.5/39.0	90	117

Randell D. Hiatt
REGISTERED CIVIL ENGINEER

June 6, 2008
PLANS APPROVAL DATE

REGISTERED PROFESSIONAL ENGINEER
Randell D. Hiatt
No. C50200
Exp. 6-30-09
CIVIL
STATE OF CALIFORNIA

The State of California or its officers or agents shall not be responsible for the accuracy or completeness of electronic copies of this plan sheet.

To accompany plans dated 10-18-10

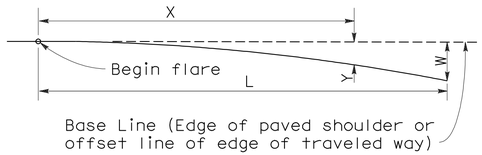

$$Y = \frac{WX^2}{L^2}$$

Y = Offset from base line
W = Maximum offset
X = Distance along base line
L = Length of flare

PARABOLIC FLARE OFFSETS

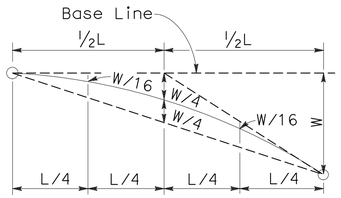

TYPICAL PARABOLIC LAYOUT

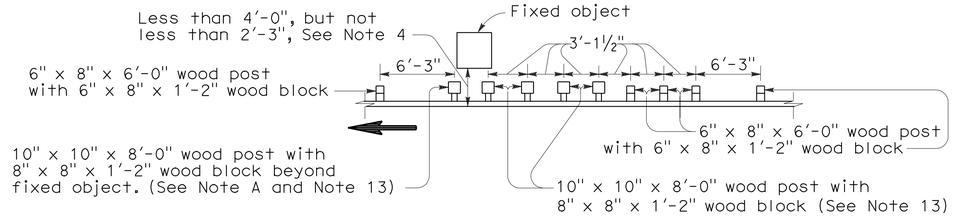

NOTE A: For a series of fixed objects (bridge columns, overhead sign supports, etc.) additional 10" x 10" x 8'-0" wood post with 8" x 8" x 1'-2" wood blocks at 3'-1½" center to center spacing are to be used between fixed object(s).

STRENGTHENED RAILING SECTIONS FOR FIXED OBJECT

Use strengthened railing sections with Layout Types 16F or 16G where minimum clearance between the face of the guard railing and fixed object(s) is less than 4'-0", but not less than 2'-3". See Note 4.

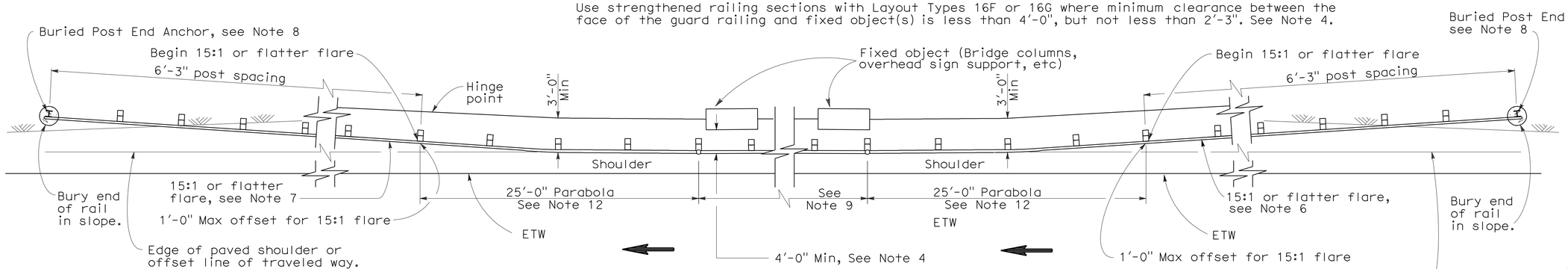

TYPE 16F LAYOUT

(GUARD RAILING INSTALLATION AT ROADSIDE FIXED OBJECT OR OBJECTS WITH A BURIED END ANCHOR TREATMENT AT EACH END OF RAILING)
See Notes 10 and 11

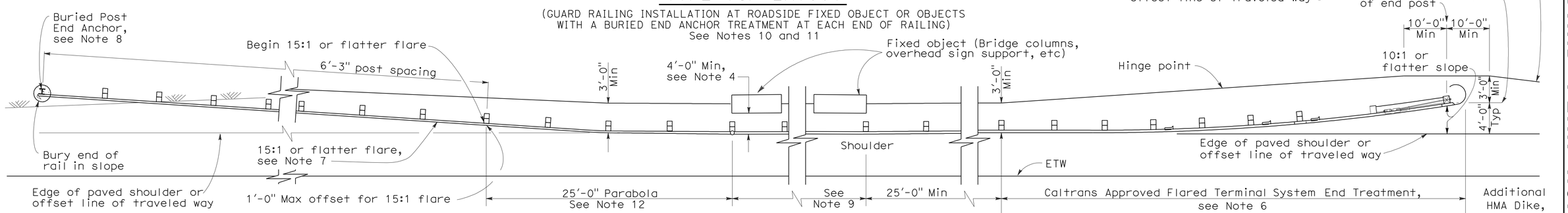

TYPE 16G LAYOUT

(GUARD RAILING INSTALLATION AT ROADSIDE FIXED OBJECT OR OBJECTS WITH A FLARED END TREATMENT AND A BURIED END ANCHOR TREATMENT AT THE ENDS OF RAILING)
See Notes 10 and 11

NOTES:

1. Line post, blocks and hardware to be used are shown on Standard Plans A77A1, A77A2, A77B1, A77C1 and A77C2.
2. Guard railing post spacing to be 6'-3" center to center, except as otherwise noted.
3. Except as noted, line posts are 6" x 8" x 6'-0" wood with 6" x 8" x 1'-2" wood blocks. W6 x 9 steel posts, 6'-0" in length, with 8" x 8" x 1'-2" notched wood blocks or notched recycled plastic blocks may be used for 6" x 8" x 6'-0" wood posts with 6" x 8" x 1'-2" wood blocks where applicable and when specified.
4. A 4'-0" minimum clearance is required between the face of the railing and the face of a fixed object located directly behind standard guard railing sections with post spacing at 6'-3". Construct guard railing as shown in the detail "Strengthened Railing Sections for Fixed Objects" on this plan, where the clearance between the face of the railing and the face of a fixed object is less than 4'-0", but not less than 2'-3". Where the clearance is less than 2'-3", a concrete wall or barrier should be constructed to shield the fixed object(s).
5. Direction of adjacent traffic indicated by ⟶.
6. The type of terminal system to be used will be shown on the Project Plans.
7. The 15:1 or flatter flare for the buried post anchor is based on the edge of the paved shoulder or offset line of edge of the traveled way. The length of guard railing within the 15:1 or flatter flare is based on site conditions and should be a length equal to multiples of 12'-6".
8. For details of the Buried Post End Anchor details, see Standard Plan A77I2.
9. As site conditions dictate, construct additional guard railing to shield fixed object(s). Additional guard railing length equal to multiples of 12'-6". Post spacing at 6'-3", except as specified in Note 4.
10. Layout Types 16D through 16L, shown on the A77G Series of Revised Standard Plans, are typically used on highways where guard railing is recommended to shield roadside fixed object(s) and a crashworthy end treatment is required for both directions of traffic.
11. Where placement of dike is required with guard railing, see Revised Standard Plan RSP A77C4 for dike positioning details.
12. For typical flare offsets for 25'-0" length parabola with maximum offset of 1'-0", see Revised Standard Plan RSP A77E1.
13. W6 x 15 steel post, 8'-0" in length, with 8" x 8" x 1'-2" notched wood block or notched recycled plastic blocks may be used in place of the 10" x 10" x 8'-0" wood post with 8" x 8" x 1'-2" wood block shown in the "Strengthened Railing Sections Detail".

STATE OF CALIFORNIA
DEPARTMENT OF TRANSPORTATION

METAL BEAM GUARD RAILING TYPICAL LAYOUTS FOR ROADSIDE FIXED OBJECTS

NO SCALE

RSP A77G5 DATED JUNE 6, 2008 SUPERSEDES STANDARD PLAN A77G5 DATED MAY 1, 2006 - PAGE 63 OF THE STANDARD PLANS BOOK DATED MAY 2006.

REVISED STANDARD PLAN RSP A77G5

2006 REVISED STANDARD PLAN RSP A77G5

12-10-07

DIST	COUNTY	ROUTE	POST MILES TOTAL PROJECT	SHEET NO.	TOTAL SHEETS
12	Ora	241	15.5/39.0	91	117

Randell D. Hiatt
REGISTERED CIVIL ENGINEER

June 6, 2008
PLANS APPROVAL DATE

REGISTERED PROFESSIONAL ENGINEER
Randell D. Hiatt
No. C50200
Exp. 6-30-09
CIVIL
STATE OF CALIFORNIA

The State of California or its officers or agents shall not be responsible for the accuracy or completeness of electronic copies of this plan sheet.

To accompany plans dated 10-18-10

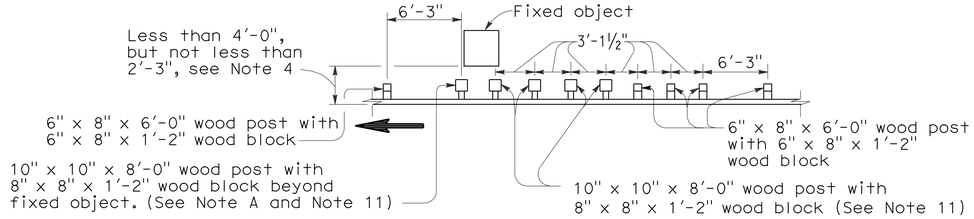

Note A. For a series of fixed objects (bridge columns, overhead sign supports, etc.) additional 10" x 10" x 8'-0" wood post with 8" x 8" x 1'-2" wood blocks at 3'-1½" center to center spacing are to be used between fixed object(s).

STRENGTHENED RAILING SECTIONS FOR FIXED OBJECT

Use strengthened railing sections with Layout Type 16H where minimum clearance between the face of the guard railing and fixed object(s) is less than 4'-0", but not less than 2'-3". See Note 4.

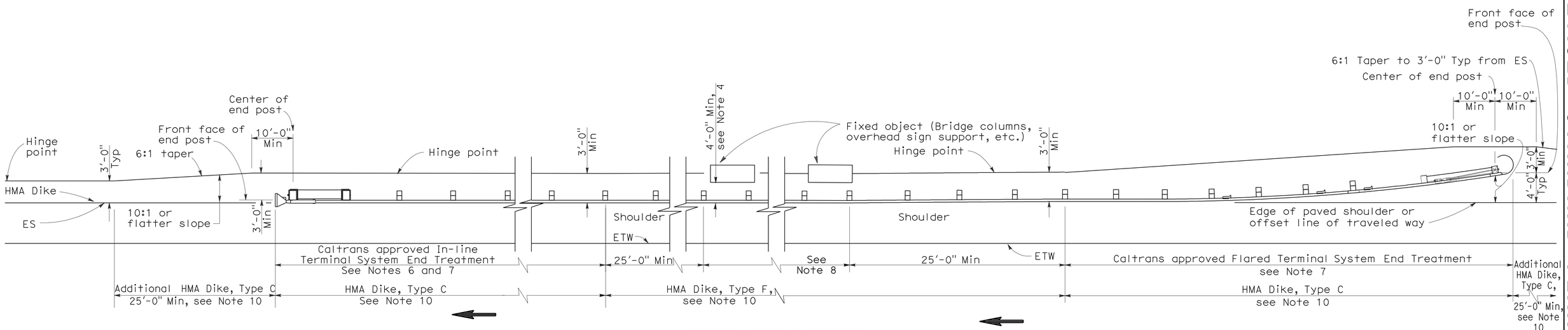

TYPE 16H LAYOUT

(GUARD RAILING INSTALLATION AT ROADSIDE FIXED OBJECT OR OBJECTS WITH A FLARED END TREATMENT AND AN IN-LINE TREATMENT AT THE ENDS OF RAILING)
See Note 9

NOTES:

1. Line post, blocks and hardware to be used are shown on Standard Plans A77A1, A77A2, A77B1, A77C1 and A77C2.
2. Guard railing post spacing to be 6'-3" center to center, except as otherwise noted.
3. Except as noted, line posts are 6" x 8" x 6'-0" wood with 6" x 8" x 1'-2" wood blocks. W6 x 9 steel posts, 6'-0" in length, with 6" x 8" x 1'-2" notched wood blocks or notched recycled plastic blocks may be used for 6" x 8" x 6'-0" wood posts with 6" x 8" x 1'-2" wood blocks where applicable and when specified.
4. A 4'-0" minimum clearance is required between the face of the railing and the face of a fixed object located directly behind standard guard railing sections with post spacing at 6'-3". Construct guard railing as shown in the detail "Strengthened Railing Sections for Fixed Objects" on this plan, where the clearance between the face of the railing and the face of a fixed object is less than 4'-0", but not less than 2'-3". Where the clearance is less than 2'-3", a concrete wall or barrier should be constructed to shield the fixed object(s).
5. Direction of adjacent traffic indicated by ⟶ .
6. In-line Terminal System End Treatments are used where site conditions will not accommodate a flared end treatment.
7. The type of terminal system to be used will be shown on the Project Plans.
8. As site conditions dictate, construct additional guard railing to shield fixed object(s). Additional guard railing length equal to multiples of 12'-6". Post spacing at 6'-3", except as specified in Note 4.
9. Layout Types 16D through 16L, shown on the A77G Series of Revised Standard PLans, typically used where guard railing is recommended to shield roadside fixed object(s) and a crashworthy end treatment is required for both directions of traffic.
10. Where placement of dike is required with guard railing, see Revised Standard Plan RSP A77C4 for dike positioning details.
11. W6 x 15 steel post, 8'-0" in length, with 8" x 8" x 1'-2" notched wood block or notched recycled plastic blocks may be used in place of the 10" x 10" x 8'-0" wood post with 8" x 8" x 1'-2" wood block shown in the "Strengthened Railing Sections Detail".

STATE OF CALIFORNIA
DEPARTMENT OF TRANSPORTATION

METAL BEAM GUARD RAILING TYPICAL LAYOUTS FOR ROADSIDE FIXED OBJECTS

NO SCALE

RSP A77G6 DATED JUNE 6, 2008 SUPERSEDES STANDARD PLAN A77G6
DATED MAY 1, 2006 - PAGE 64 OF THE STANDARD PLANS BOOK DATED MAY 2006.

REVISED STANDARD PLAN RSP A77G6

2006 REVISED STANDARD PLAN RSP A77G6

12-10-07

DIST	COUNTY	ROUTE	POST MILES TOTAL PROJECT	SHEET NO.	TOTAL SHEETS
12	Ora	241	15.5/39.0	92	117

Randell D. Hiatt
REGISTERED CIVIL ENGINEER

June 6, 2008
PLANS APPROVAL DATE

REGISTERED PROFESSIONAL ENGINEER
Randell D. Hiatt
No. C50200
Exp. 6-30-09
CIVIL
STATE OF CALIFORNIA

The State of California or its officers or agents shall not be responsible for the accuracy or completeness of electronic copies of this plan sheet.

To accompany plans dated 10-18-10

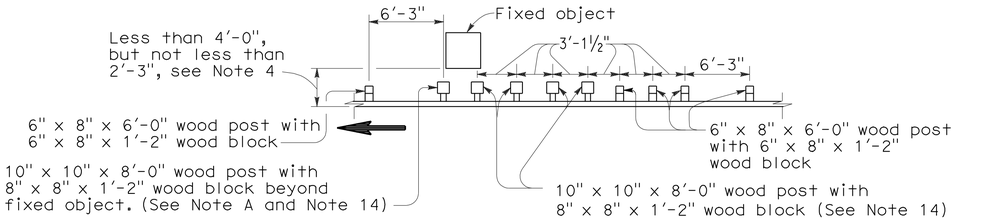

Note A. For a series of fixed objects (bridge columns, overhead sign supports, etc.) additional 10" x 10" x 8'-0" wood post with 8" x 8" x 1'-2" wood blocks at 3'-1½" center to center spacing are to be used between fixed object(s).

STRENGTHENED RAILING SECTIONS FOR FIXED OBJECT

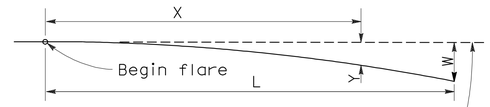

Base Line (Edge of paved shoulder or offset line of edge of traveled way)

$$Y = \frac{WX^2}{L^2}$$

Y = Offset from base line
W = Maximum offset
X = Distance along base line
L = Length of flare

PARABOLIC FLARE OFFSETS

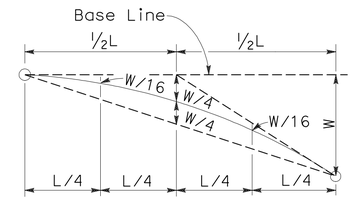

TYPICAL PARABOLIC LAYOUT

Use strengthened railing sections with Layout Types 16I or 16J Layouts where minimum clearance between the face of the guard railing and fixed object(s) is less than 4'-0", but not less than 2'-3". See Note 4.

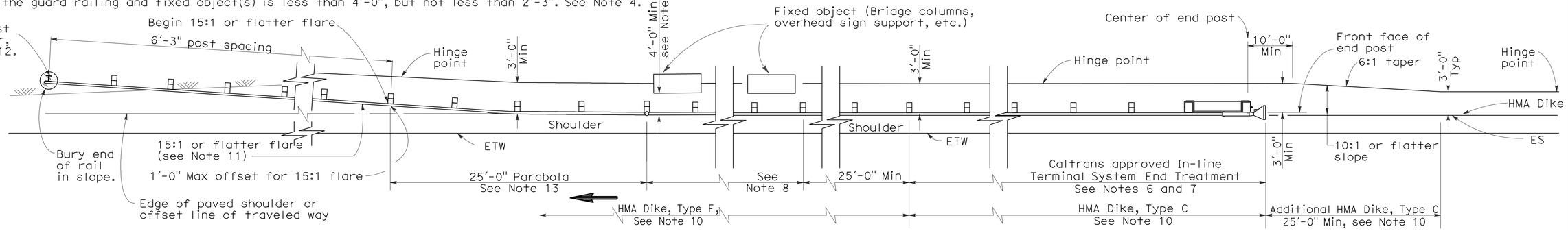

TYPE 16I LAYOUT

(GUARD RAILING INSTALLATION AT ROADSIDE FIXED OBJECT OR OBJECTS WITH AN IN-LINE END TREATMENT AND A BURIED END ANCHOR TREATMENT AT THE ENDS OF RAILING) See Note 9

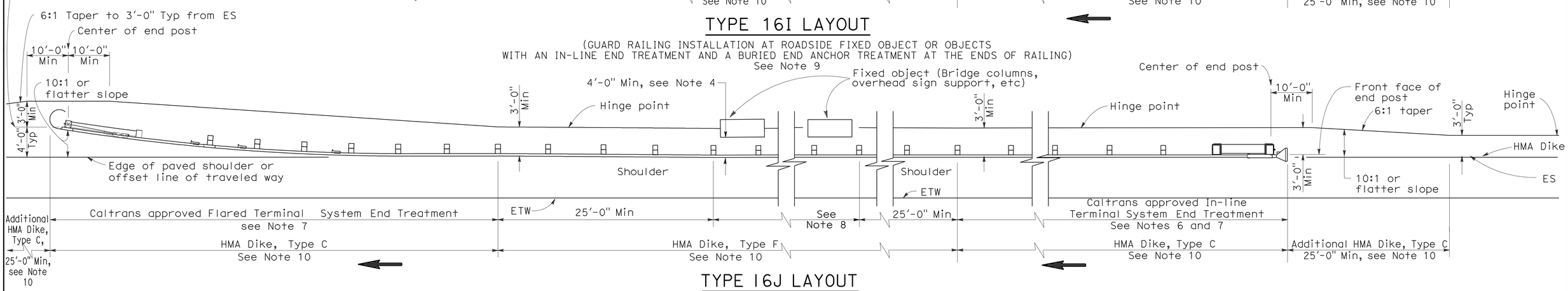

TYPE 16J LAYOUT

(GUARD RAILING INSTALLATION AT ROADSIDE FIXED OBJECT OR OBJECTS WITH AN IN-LINE END TREATMENT AND A FLARED END TREATMENT AT THE ENDS OF RAILING) See Note 9

NOTES:

1. Line post, blocks and hardware to be used are shown on Standard Plans A77A1, A77A2, A77B1, A77C1 and A77C2.
2. Guard railing post spacing to be 6'-3" center to center, except as otherwise noted.
3. Except as noted, line posts are 6" x 8" x 6'-0" wood with 6" x 8" x 1'-2" wood blocks. W6 x 9 steel posts, 6'-0" in length, with 6" x 8" x 1'-2" notched wood blocks or notched recycled plastic blocks may be used for 6" x 8" x 6'-0" wood posts with 6" x 8" x 1'-2" wood blocks where applicable and when specified.
4. A 4'-0" minimum clearance is required between the face of the railing and the face of a fixed object located directly behind standard guard railing sections with post spacing at 6'-3". Construct guard railing as shown in the detail "Strengthened Railing Sections for Fixed Objects" on this plan, where the clearance between the face of the railing and the face of a fixed object is less than 4'-0", but not less than 2'-3". Where the clearance is less than 2'-3", a concrete wall or barrier should be constructed to shield the fixed object(s).
5. Direction of adjacent traffic indicated by ➡.
6. In-line Terminal System End Treatments are used where site conditions will not accommodate a flared end treatment.
7. The type of terminal system to be used will be shown on the Project Plans.
8. As site conditions dictate, construct additional guard railing to shield fixed object(s). Additional guard railing length equal to multiples of 12'-6". Post spacing at 6'-3", except as specified in Note 4.
9. Layout Types 16D through 16L, shown on the A77G Series of Revised Standard Plans, are typically used where guard railing is recommended to shield roadside fixed object(s) and a crashworthy end treatment is required for both directions of traffic.
10. Where placement of dike is required with guard railing, see Revised Standard Plan RSP A77C4 for dike positioning details.
11. The 15:1 or flatter flare for the buried post anchor is based on the edge of the paved shoulder or offset line of edge of the traveled way. The length of guard railing within the 15:1 or flatter flare is based on site conditions and should be a length equal to multiples of 12'-6".
12. For details of Buried Post End Anchor details, see Standard Plan A77I2.
13. For typical flare offsets for 25'-0" length parabola with maximum offset of 1'-0", see Revised Standard RSP Plan A77E1.
14. W6 x 15 steel post, 8'-0" in length, with 8" x 8" x 1'-2" notched wood block or notched recycled plastic blocks may be used in place of the 10" x 10" x 8'-0" wood post with 8" x 8" x 1'-2" wood block shown in the "Strengthened Railing Sections Detail".

STATE OF CALIFORNIA
DEPARTMENT OF TRANSPORTATION

METAL BEAM GUARD RAILING TYPICAL LAYOUTS FOR ROADSIDE FIXED OBJECTS

NO SCALE

RSP A77G7 DATED JUNE 6, 2008 SUPERSEDES STANDARD PLAN A77G7 DATED MAY 1, 2006 - PAGE 65 OF THE STANDARD PLANS BOOK DATED MAY 2006.

REVISED STANDARD PLAN RSP A77G7

2006 REVISED STANDARD PLAN RSP A77G7

12-10-07

DIST	COUNTY	ROUTE	POST MILES TOTAL PROJECT	SHEET NO.	TOTAL SHEETS
12	Ora	241	15.5/39.0	93	117

Randell D. Hiatt
REGISTERED CIVIL ENGINEER

June 6, 2008
PLANS APPROVAL DATE

REGISTERED PROFESSIONAL ENGINEER Randell D. Hiatt No. C50200 Exp. 6-30-09 CIVIL STATE OF CALIFORNIA

The State of California or its officers or agents shall not be responsible for the accuracy or completeness of electronic copies of this plan sheet.

To accompany plans dated 10-18-10

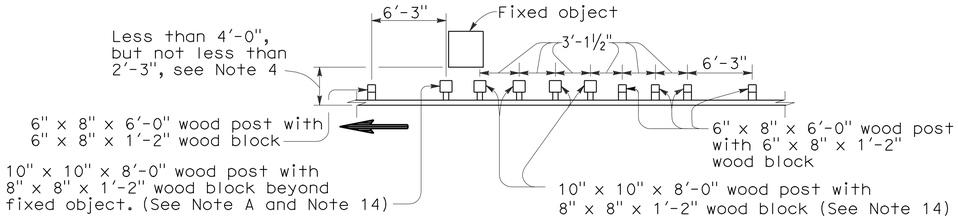

Note A. For a series of fixed objects (bridge columns, overhead sign supports, etc.) additional 10" x 10" x 8'-0" wood post with 8" x 8" x 1'-2" wood blocks at 3'-1½" center to center spacing are to be used between fixed object(s).

STRENGTHENED RAILING SECTIONS FOR FIXED OBJECT

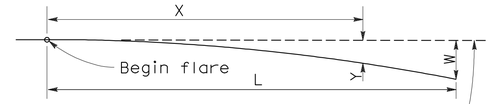

Base Line (Edge of paved shoulder or offset line of edge of traveled way)

$$Y = \frac{WX^2}{L^2}$$

Y = Offset from base line
W = Maximum offset
X = Distance along base line
L = Length of flare

PARABOLIC FLARE OFFSETS

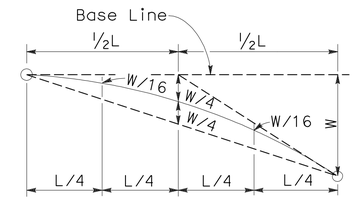

TYPICAL PARABOLIC LAYOUT

Use strengthened railing sections with Layout Types 16K or 16L Layouts where minimum clearance between the face of the guard railing and fixed object(s) is less than 4'-0", but not less than 2'-3". See Note 4.

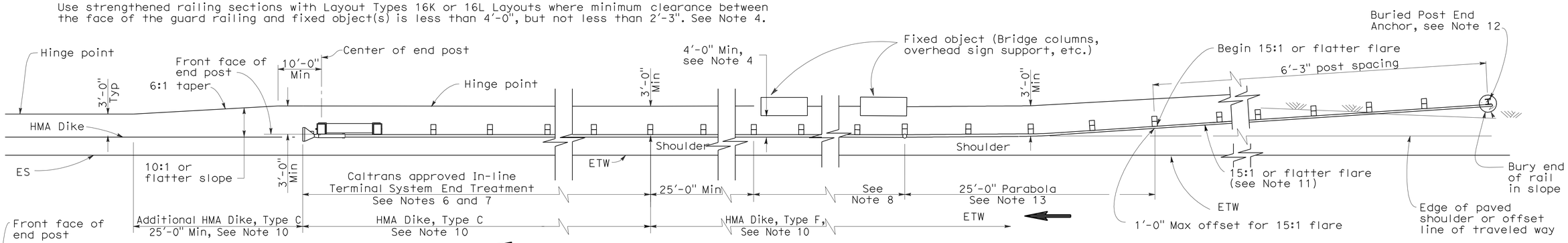

TYPE 16K LAYOUT

(GUARD RAILING INSTALLATION AT ROADSIDE FIXED OBJECT OR OBJECTS WITH A BURIED END ANCHOR TREATMENT AND AN IN-LINE END TREATMENT AT THE ENDS OF RAILING)
See Note 9

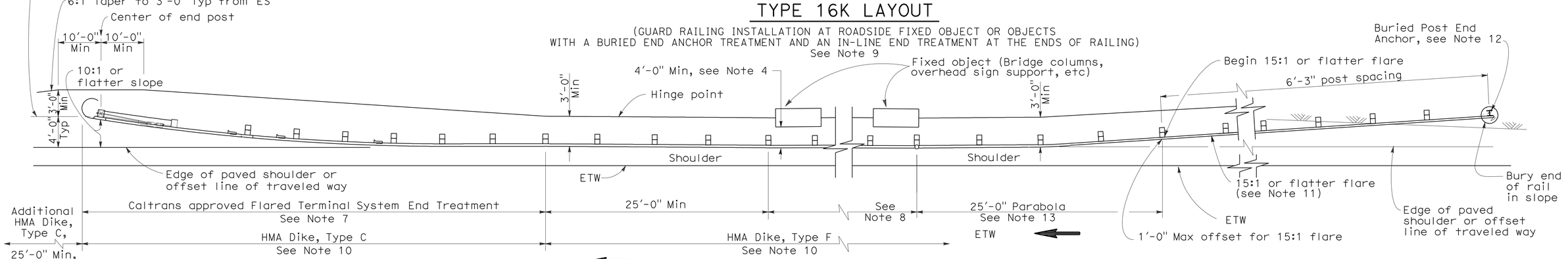

TYPE 16L LAYOUT

(GUARD RAILING INSTALLATION AT ROADSIDE FIXED OBJECT OR OBJECTS WITH A BURIED END ANCHOR TREATMENT AND A FLARED END TREATMENT AT THE ENDS OF RAILING)
See Note 9

NOTES:

1. Line post, blocks and hardware to be used are shown on Standard Plans A77A1, A77A2, A77B1, A77C1 and A77C2.
2. Guard railing post spacing to be 6'-3" center to center, except as otherwise noted.
3. Except as noted, line posts are 6" x 8" x 6'-0" wood with 6" x 8" x 1'-2" wood blocks. W6 x 9 steel posts, 6'-0" in length, with 6" x 8" x 1'-2" notched wood blocks or notched recycled plastic blocks may be used for 6" x 8" x 6'-0" wood posts with 6" x 8" x 1'-2" wood blocks where applicable and when specified.
4. A 4'-0" minimum clearance is required between the face of the railing and the face of a fixed object located directly behind standard guard railing sections with post spacing at 6'-3". Construct guard railing as shown in the detail "Strengthened Railing Sections for Fixed Objects" on this plan, where the clearance between the face of the railing and the face of a fixed object is less than 4'-0", but not less than 2'-3". Where the clearance is less than 2'-3", a concrete wall or barrier should be constructed to shield the fixed object(s).
5. Direction of adjacent traffic indicated by ➡.
6. In-line Terminal System End Treatments are used where site conditions will not accommodate a flared end treatment.
7. The type of terminal system to be used will be shown on the Project Plans.
8. As site conditions dictate, construct additional guard railing to shield fixed object(s). Additional guard railing length equal to multiples of 12'-6". Post spacing at 6'-3", except as specified in Note 4.
9. Layout Types 16D through 16L, shown on the A77G Series of Revised Standard Plans are typically used where guard railing is recommended to shield roadside fixed object(s) and a crashworthy end treatment is required for both directions of traffic.
10. Where placement of dike is required with guard railing, see Revised Standard Plan RSP A77C4 for dike positioning details.
11. The 15:1 or flatter flare for the buried post anchor is based on the edge of the paved shoulder or offset line of edge of the traveled way. The length of guard railing within the 15:1 or flatter flare is based on site conditions and should be a length equal to multiples of 12'-6".
12. For details of Buried Post End Anchor details, see Standard Plan A77I2.
13. For typical flare offsets for 25'-0" length parabola with maximum offset of 1'-0", see Revised Standard RSP Plan A77E1.
14. W6 x 15 steel post, 8'-0" in length, with 8" x 8" x 1'-2" notched wood block or notched recycled plastic blocks may be used in place of the 10" x 10" x 8'-0" wood post with 8" x 8" x 1'-2" wood block shown in the "Strengthened Railing Sections Detail".

STATE OF CALIFORNIA
DEPARTMENT OF TRANSPORTATION

METAL BEAM GUARD RAILING TYPICAL LAYOUTS FOR ROADSIDE FIXED OBJECTS

NO SCALE

RSP A77G8 DATED JUNE 6, 2008 SUPERSEDES STANDARD PLAN A77G8 DATED MAY 1, 2006 - PAGE 66 OF THE STANDARD PLANS BOOK DATED MAY 2006.

REVISED STANDARD PLAN RSP A77G8

2006 REVISED STANDARD PLAN RSP A77G8

12-10-07

DIST	COUNTY	ROUTE	POST MILES TOTAL PROJECT	SHEET NO.	TOTAL SHEETS
12	Ora	241	15.5/39.0	94	117

Randell D. Hiatt
REGISTERED CIVIL ENGINEER

June 6, 2008
PLANS APPROVAL DATE

REGISTERED PROFESSIONAL ENGINEER
Randell D. Hiatt
No. C50200
Exp. 6-30-09
CIVIL
STATE OF CALIFORNIA

The State of California or its officers or agents shall not be responsible for the accuracy or completeness of electronic copies of this plan sheet.

To accompany plans dated 10-18-10

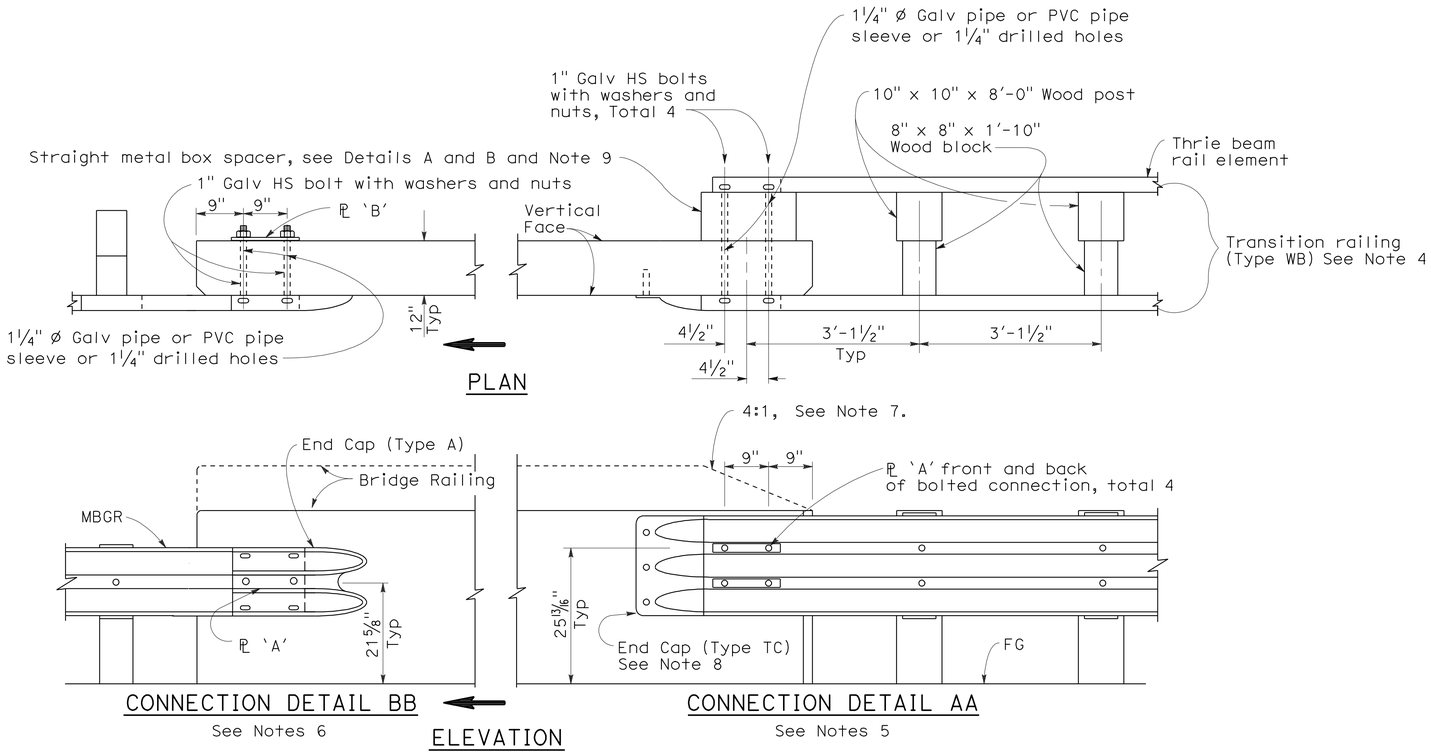

GUARD RAILING CONNECTION TO BRIDGE RAILING WITHOUT SIDEWALK

NOTES:

1. See Revised Standard Plan RSP A77J2 for additional connection details to bridges without sidewalks.
2. Additional details of posts, blocks and hardware are shown on Standard Plan A77B1, A77C1 and A77C2.
3. Direction of adjacent traffic indicated by ➡.
4. For additional details of Transition Railing (Type WB), see Standard Plan A77J4. Transition Railing (Type WB) transitions the 12 gage w-beam standard railing section of guard railing to a heavier gage nested thrie beam railing section which is connected to the concrete bridge railing.
5. For typical use of Connection Detail AA, see Layout Types 12A and 12B on Revised Standard Plan RSP A77F1, Layout Types 12C and 12D on Standard Plan A77F2, and Layout Type 12E on Revised Standard Plan RSP A77F3.
6. For typical use of Connection Detail BB, see Layout Type 12D (structure departure railing connection) on Standard Plan A77F2 and Layout Type 12DD on Standard Plan A77F5.
7. Where the height of the bridge railing exceeds the height of the thrie beam railing by more than 1" at Connection Detail AA, taper the top of the end of the bridge railing at 4:1 to match the top elevation of the thrie beam rail.
8. For details of End Cap (Type TC), see Standard Plan A77J4.
9. See Standard Plan A77J4 for additional details regarding depth dimension for straight metal box spacer.

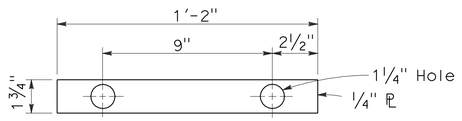

PLATE 'A'

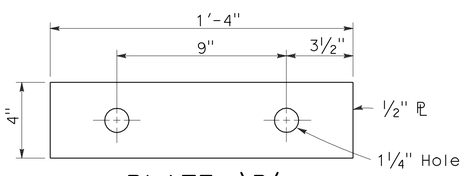

PLATE 'B'
(For backside of connection BB)

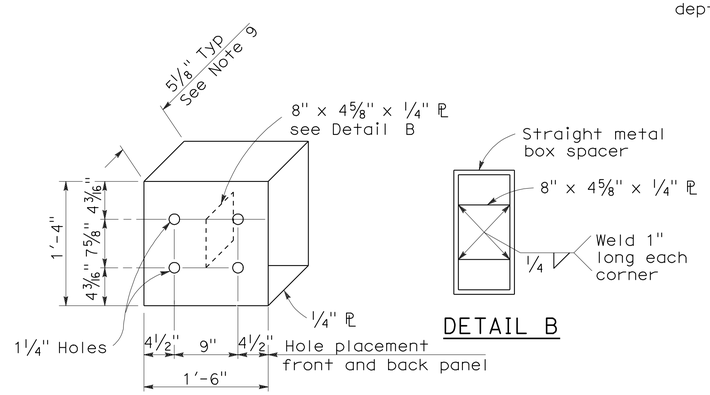

DETAIL B

DETAIL A

STRAIGHT METAL BOX SPACER

STATE OF CALIFORNIA
DEPARTMENT OF TRANSPORTATION

METAL BEAM GUARD RAILING CONNECTIONS TO BRIDGE RAILINGS WITHOUT SIDEWALKS DETAILS No.1

NO SCALE

RSP A77J1 DATED JUNE 6, 2008 SUPERSEDES STANDARD PLAN A77J1
DATED MAY 1, 2006 - PAGE 72 OF THE STANDARD PLANS BOOK DATED MAY 2006.

REVISED STANDARD PLAN RSP A77J1

2006 REVISED STANDARD PLAN RSP A77J1

12-10-07

DIST	COUNTY	ROUTE	POST MILES TOTAL PROJECT	SHEET NO.	TOTAL SHEETS
12	Ora	241	15.5/39.0	95	117

Randell D. Hiatt
REGISTERED CIVIL ENGINEER

June 6, 2008
PLANS APPROVAL DATE

REGISTERED PROFESSIONAL ENGINEER
Randell D. Hiatt
No. C50200
Exp. 6-30-09
CIVIL
STATE OF CALIFORNIA

The State of California or its officers or agents shall not be responsible for the accuracy or completeness of electronic copies of this plan sheet.

To accompany plans dated 10-18-10

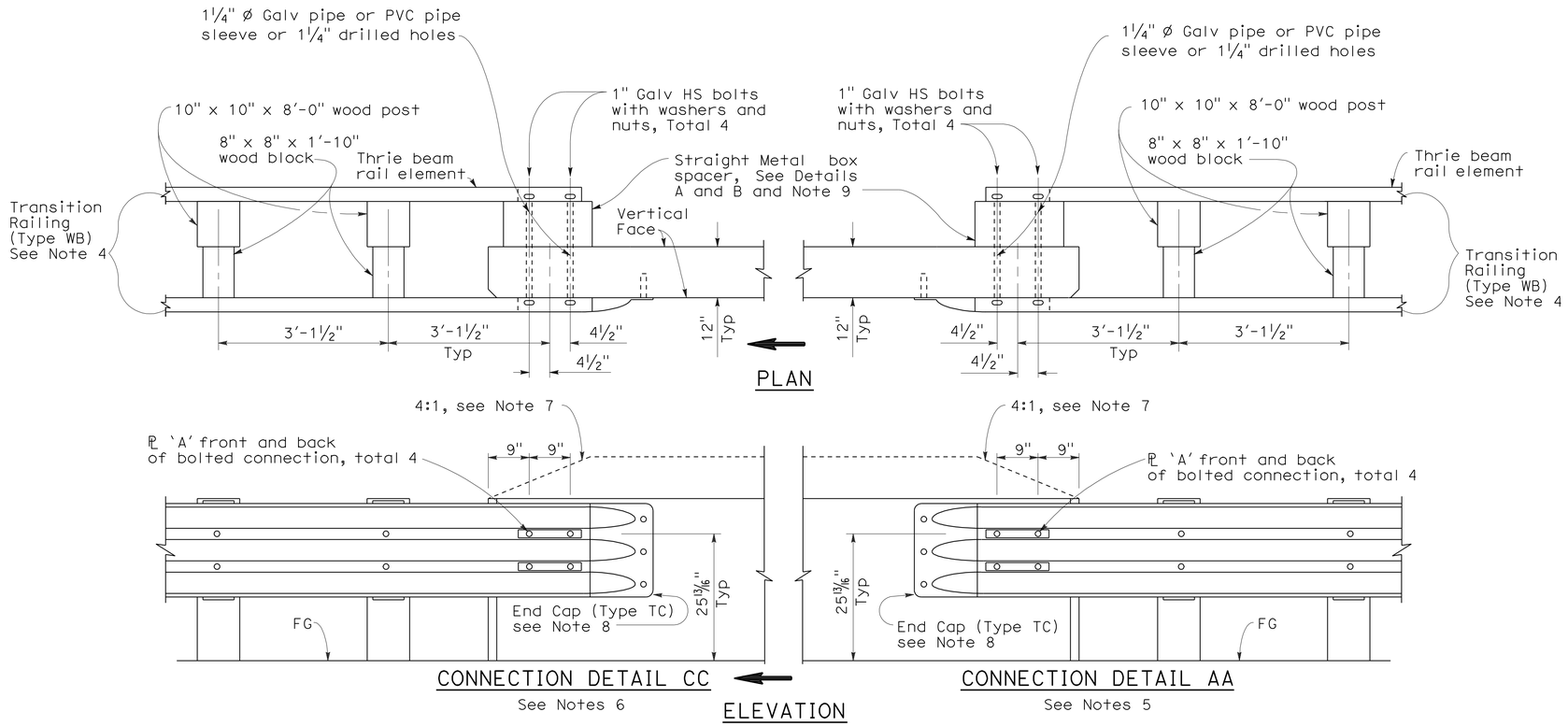

GUARD RAILING CONNECTION TO BRIDGE RAILING WITHOUT SIDEWALK

NOTES:

1. See Revised Standard Plan RSP A77J1 for additional connection details to bridges without sidewalks.
2. Additional details of posts, blocks and hardware are shown on Standard Plan A77B1, A77C1 and A77C2.
3. Direction of adjacent traffic indicated by ⟹.
4. For additional details of Transition Railing (Type WB), see Standard Plan A77J4. Transition Railing (Type WB) transitions the 12 gage w-beam standard railing section of guard railing to a heavier gage nested thrie beam railing section which is connected to the concrete bridge railing.
5. For typical use of Connection Detail AA, see Layout Types 12A and 12B on Revised Standard Plan RSP A77F1, Layout Types 12C and 12D on Standard Plan A77F2, and Layout Type 12E on Revised Standard Plan RSP A77F3.
6. For typical use of Connection Detail CC, see Layout Types 12AA and 12BB on Standard Plan A77F4 and Layout Type 12CC on Standard Plan A77F5.
7. Where the height of the bridge railing exceeds the height of the thrie beam railing by more than 1" at Connection Detail AA and connection Detail CC, taper the top of the end of the bridge railing at 4:1 to match the top elevation of the thrie beam railing.
8. For details of End Cap (Type TC), see Standard Plans A77J4.
9. See Standard Plans A77J4 for additional details regarding depth dimension for straight metal box spacer.

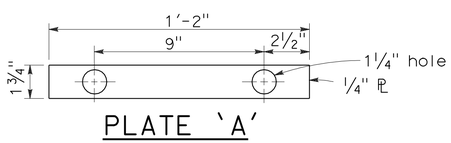

PLATE 'A'

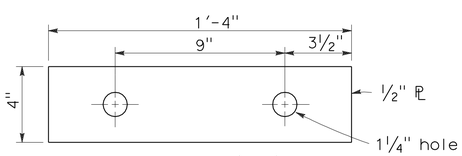

PLATE 'B'
(For backside of connection BB)

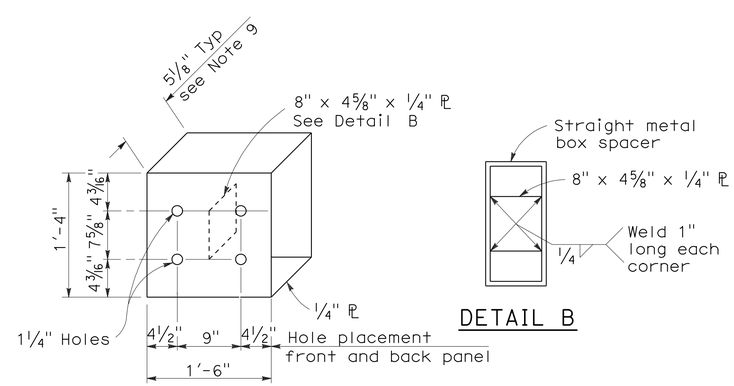

DETAIL A

DETAIL B

STRAIGHT METAL BOX SPACER

STATE OF CALIFORNIA
DEPARTMENT OF TRANSPORTATION

METAL BEAM GUARD RAILING CONNECTIONS TO BRIDGE RAILINGS WITHOUT SIDEWALKS DETAILS No.2

NO SCALE

RSP A77J2 DATED JUNE 6, 2008 SUPERSEDES STANDARD PLAN A77J2 DATED MAY 1, 2006 - PAGE 73 OF THE STANDARD PLANS BOOK DATED MAY 2006.

REVISED STANDARD PLAN RSP A77J2

2006 REVISED STANDARD PLAN RSP A77J2

12-10-07

DIST	COUNTY	ROUTE	POST MILES TOTAL PROJECT	SHEET NO.	TOTAL SHEETS
12	Ora	241	15.5/39.0	96	117

Randell D. Hiatt
REGISTERED CIVIL ENGINEER

June 5, 2009
PLANS APPROVAL DATE

REGISTERED PROFESSIONAL ENGINEER
Randell D. Hiatt
No. C50200
Exp. 6-30-09
CIVIL
STATE OF CALIFORNIA

The State of California or its officers or agents shall not be responsible for the accuracy or completeness of electronic copies of this plan sheet.

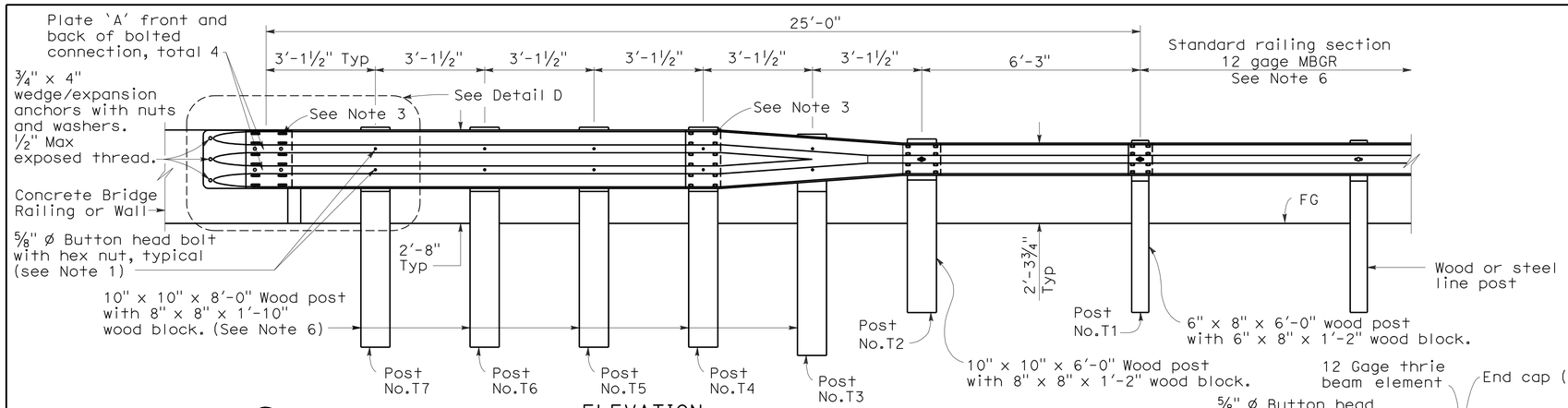

ELEVATION

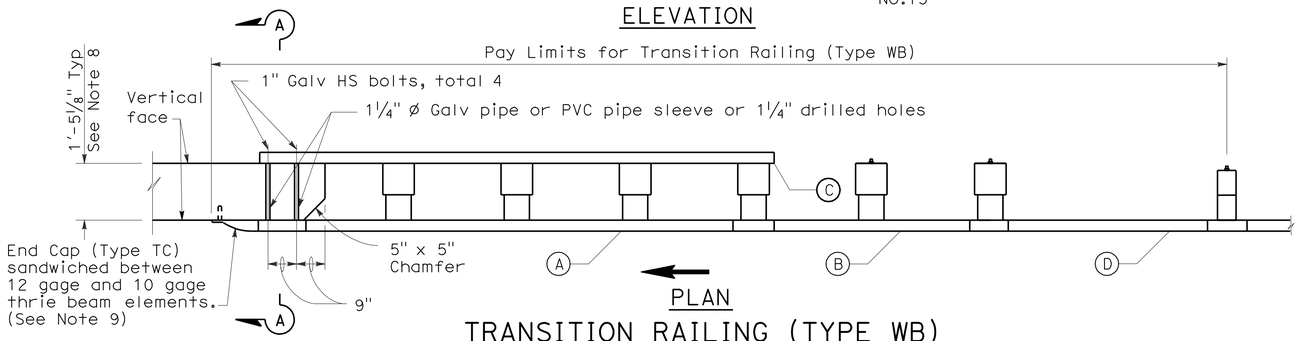

PLAN

TRANSITION RAILING (TYPE WB)

(No Blockout Attachment)

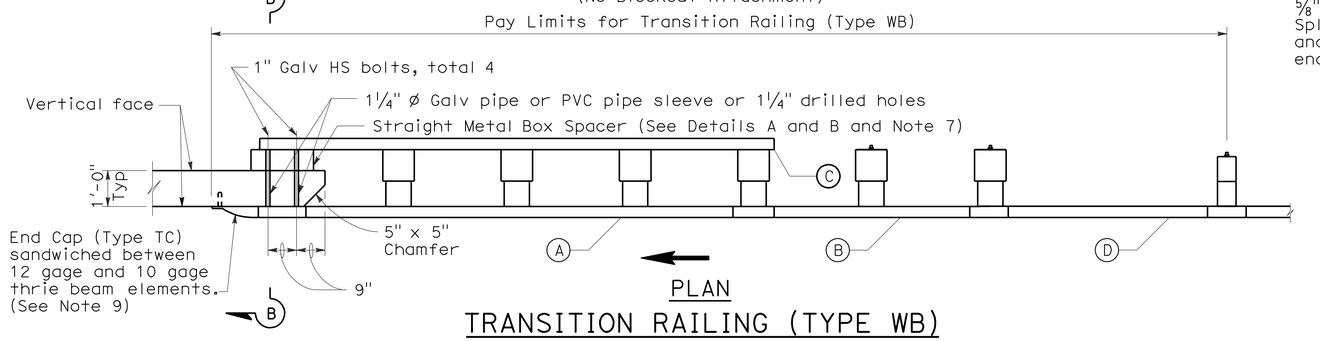

PLAN

TRANSITION RAILING (TYPE WB)

(Blockout Attachment)

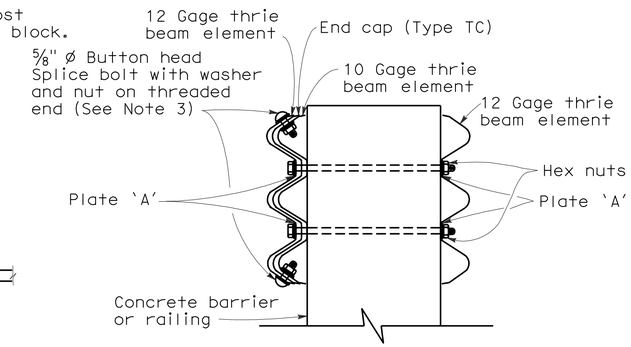

SECTION A-A

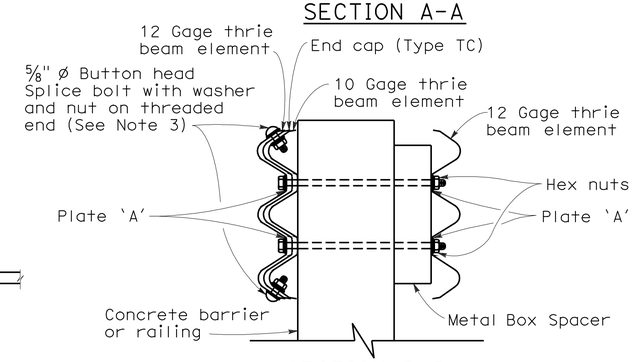

SECTION B-B

NOTES:

To accompany plans dated 10-18-10

1. Use 5/8 " ø Button head bolts and hex nuts for connections to posts. No washer on rail face for bolted connections to post.
2. The nested rail elements, end cap, and 'W' beam to thrie beam element may be spliced together prior to bolting the elements to the wood post and concrete barrier or railing.
3. Exterior splice bolt holes for rail element splices at Post No.T4 and the connection to the concrete barrier or railing shall be the standard 29/32 " x 1 1/8 " slot size. Interior splice bolt holes at these locations may be increased up to 1 1/4 " ø. Only the top 2 and the bottom 2 splice bolts with washers and nuts are required for rail splices at Post No.T4 and the connection to the concrete barrier or railing.
4. Direction of adjacent traffic indicated by →.
5. The top elevation of Post Nos.T2 through T7 shall not project more than 1" above the top elevation of the rail element.
6. Typically, the railing connected to Transition Railing (Type WB) will be either standard railing section of metal beam guard railing or an approved Caltrans end treatment attached to Post No.T1.
7. The depth of the metal box spacer varies from the 5 1/8 " to 1 1/2 " and is dependent on the width of the concrete railing or wall. The combined dimension for the depth of the metal box spacer plus the width of railing or wall is typically 17 1/8 ". Where the space between the backside of the concrete railing or wall and the rear thrie beam element is less than 1 1/2 ", metal plates similar to Plate 'A' are to be used as spacers.
8. Where the width of the concrete railing or wall is greater than 17 1/8 ", wood blocks are to be used to fill the space created between the backside of Posts No.4 through No.7 and the rear thrie beam element. These wood blocks shall be 8" in width and 1'-2" in length. The dimension between the front thrie beam element and the rear thrie beam element is to match the width of the concrete railing or wall.
9. End cap may be installed over 12 gage and 10 gage thrie beam elements where transition railing is installed on the departure end of bridge railing.

LEGEND

(A) Nested thrie beam elements (one 12 gage element nested over one 10 gage element).

(B) One 10 gage "W" beam to thrie beam element.

(C) One 12 gage thrie beam element.

(D) One 10 gage "W" beam rail element (7'-3½" length)

10 gage = 0.135" thick

12 gage = 0.108" thick

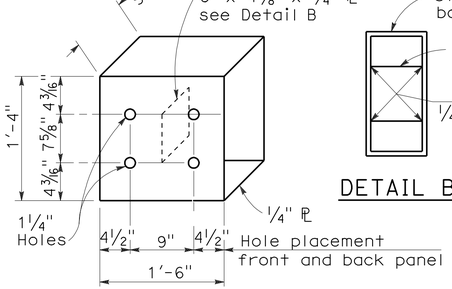

DETAIL A

STRAIGHT METAL BOX SPACER

DETAIL B

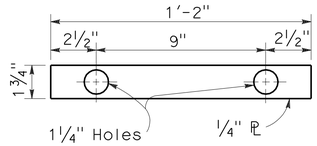

DETAIL C

PLATE 'A'

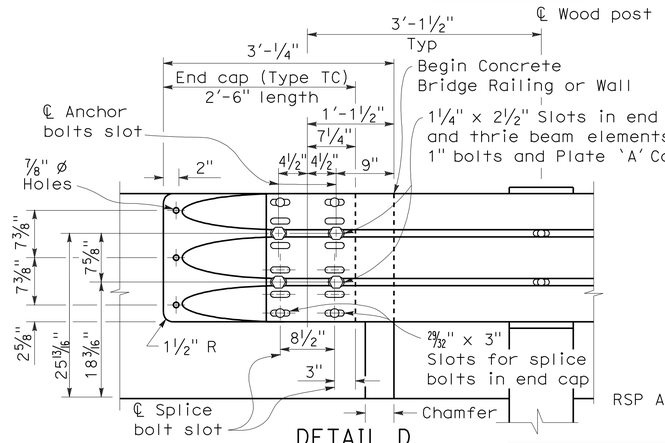

DETAIL D

STATE OF CALIFORNIA
DEPARTMENT OF TRANSPORTATION

METAL BEAM GUARD RAILING TRANSITION RAILING (TYPE WB)

NO SCALE

RSP A77J4 DATED JUNE 5, 2009 SUPERSEDES RSP A77J4 DATED JUNE 6, 2008 AND STANDARD PLAN A77J4 DATED MAY 1, 2006 - PAGE 75 OF THE STANDARD PLANS BOOK DATED MAY 2006.

REVISED STANDARD PLAN RSP A77J4

2006 REVISED STANDARD PLAN RSP A77J4

DIST	COUNTY	ROUTE	POST MILES TOTAL PROJECT	SHEET NO.	TOTAL SHEETS
12	Ora	241	15.5/39.0	97	117

Randell D. Hiatt
REGISTERED CIVIL ENGINEER

June 6, 2008
PLANS APPROVAL DATE

REGISTERED PROFESSIONAL ENGINEER
Randell D. Hiatt
No. C50200
Exp. 6-30-09
CIVIL
STATE OF CALIFORNIA

The State of California or its officers or agents shall not be responsible for the accuracy or completeness of electronic copies of this plan sheet.

To accompany plans dated 10-18-10

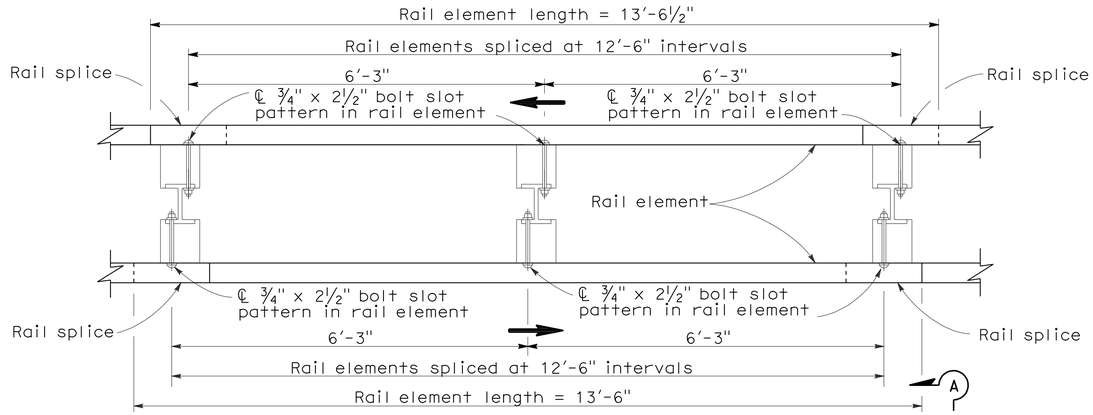

PLAN

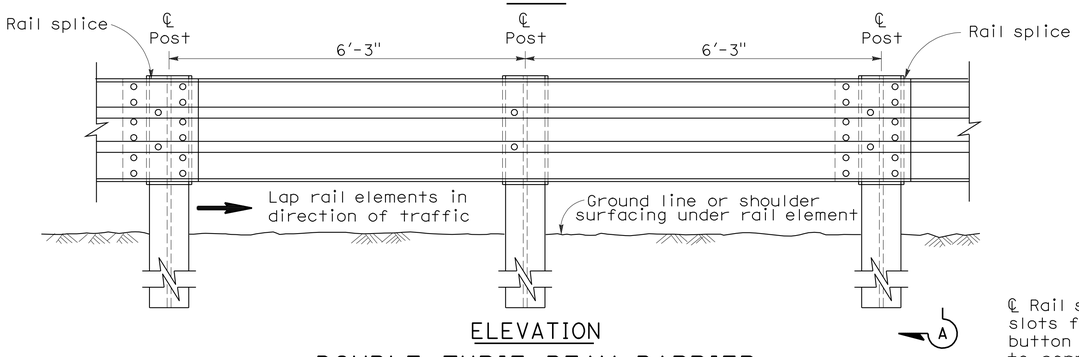

ELEVATION

DOUBLE THRIE BEAM BARRIER

(Steel post with notched wood or notched plastic blocks)
See Note 1

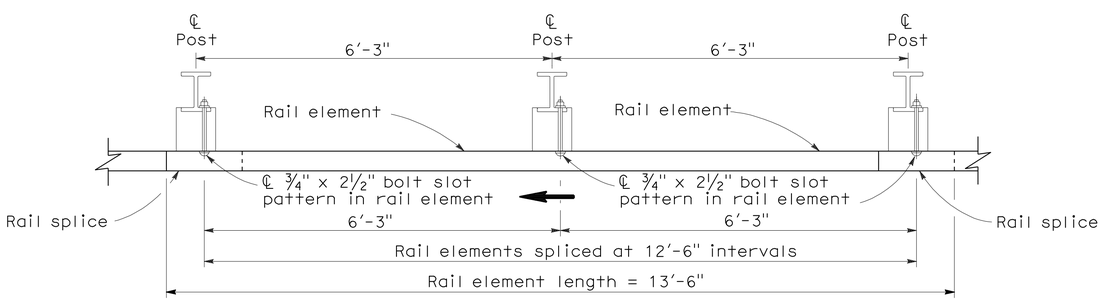

PLAN

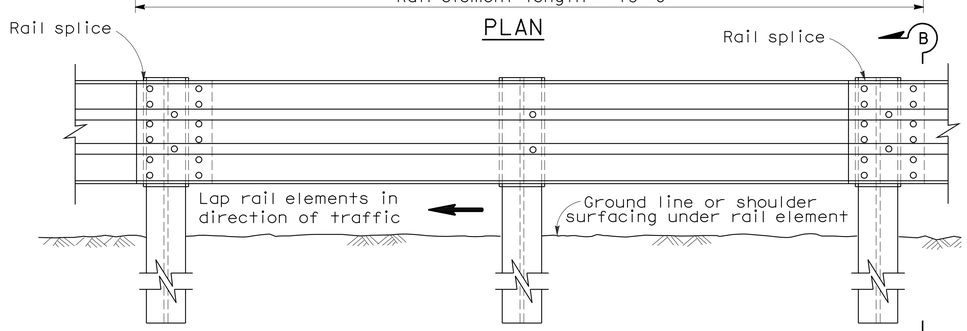

ELEVATION

SINGLE THRIE BEAM BARRIER

(Steel post with notched wood or notched plastic blocks)
See Note 1

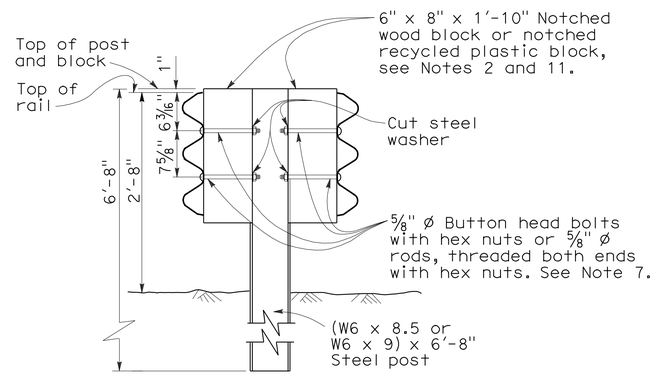

SECTION A-A

TYPICAL STEEL LINE POST INSTALLATION

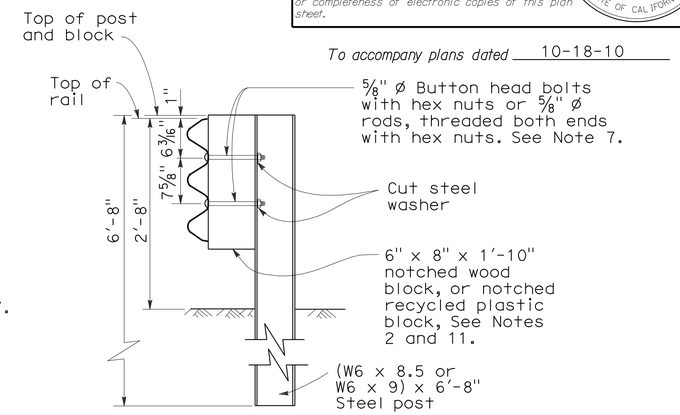

SECTION B-B

TYPICAL STEEL LINE POST INSTALLATION

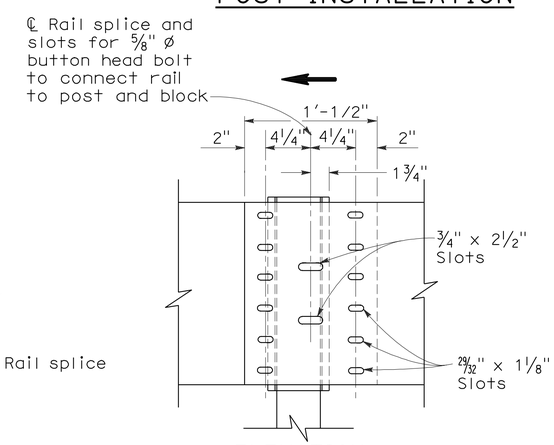

ELEVATION

RAIL ELEMENT SPLICE DETAIL

a) Connect the overlapped ends of the thrie beam rail elements with ⅝" ø x 1⅛" button head oval shoulder bolts inserted into the 29/32" x 1⅛" slots and bolted together with ⅝" ø x 1⅛" recessed hex nuts. Recess of hex nut points toward rail element. A total of 12 bolts and nuts are to be used at each rail splice connection.

b) The ends of the rail elements are to be overlapped in the direction of traffic (see details).

c) Where end cap is to be attached to the end of a rail element, a total of 4 of the above described splice bolts and nuts are to be used. Where a return cap is to be attached to the ends of rail elements, a total of 8 of the above described splice bolts and nuts are to be used.

NOTES:

1. For details of the cross section of the thrie beam rail element and details for wood post with wood block installations, see Standard Plan A78A.
2. For details of standard hardware, posts and blocks used to construct thrie beam barrier, see Revised Standard Plan RSP A78C1 and Standard Plan A78C2.
3. Thrie beam barrier post spacing to be 6'-3" center to center, except as otherwise noted.
4. Top of barrier rail to be 2'-8" above ground line or shoulder surfacing under the rail element.
5. For barrier end treatments and barrier connections, see Standard Plans A78E1, A78E2 and A78E3, Revised Standard Plans RSPs A78F1 and A78F2, Standard Plan A78G and Revised Standard Plan RSP A78H.
6. For connection to Concrete Barrier, see Revised Standard Plan RSP A78I.
7. Attach rail element to block and steel post with 2 bolts or rods on approaching traffic side of block and post web. No washer on rail face for rod or bolted connections to line post.
8. For details of thrie beam barrier on bridges, see Standard Plan A78D2. For details of thrie beam barrier at fixed objects, see Standard Plan A78D1.
9. Direction of traffic indicated by ⟶.
10. Notched face of block faces steel post.

STATE OF CALIFORNIA
DEPARTMENT OF TRANSPORTATION

THRIE BEAM BARRIER STANDARD BARRIER RAILING SECTION (STEEL POST WITH NOTCHED WOOD BLOCK OR NOTCHED RECYCLED PLASTIC BLOCK)

NO SCALE

RSP A78B DATED JUNE 6, 2008 SUPERSEDES STANDARD PLAN A78B DATED MAY 1, 2006 - PAGE 84 OF THE STANDARD PLANS BOOK DATED MAY 2006.

REVISED STANDARD PLAN RSP A78B

2006 REVISED STANDARD PLAN RSP A78B

5-14-08

DIST	COUNTY	ROUTE	POST MILES TOTAL PROJECT	SHEET No.	TOTAL SHEETS
12	Ora	241	15.5/39.0	98	117

Randell D. Hiatt
REGISTERED CIVIL ENGINEER

June 6, 2008
PLANS APPROVAL DATE

REGISTERED PROFESSIONAL ENGINEER
Randell D. Hiatt
No. C50200
Exp. 6-30-09
CIVIL
STATE OF CALIFORNIA

The State of California or its officers or agents shall not be responsible for the accuracy or completeness of electronic copies of this plan sheet.

To accompany plans dated 10-18-10

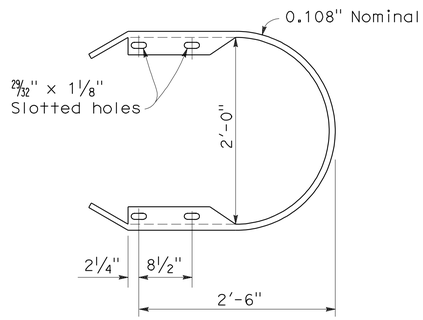

RETURN CAP
(TYPE TA)

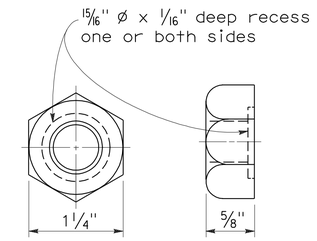

5/8" ø RECESS NUT

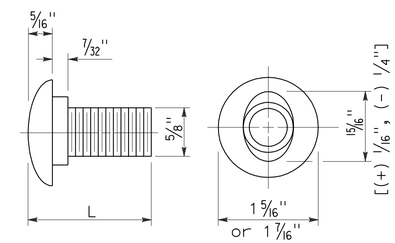

5/8" ø BUTTON HEAD BOLT

L	THREAD LENGTH
1 1/4"	full thread length
2"	full thread length
9 1/2"	4" Min thread length
18"	4" Min thread length

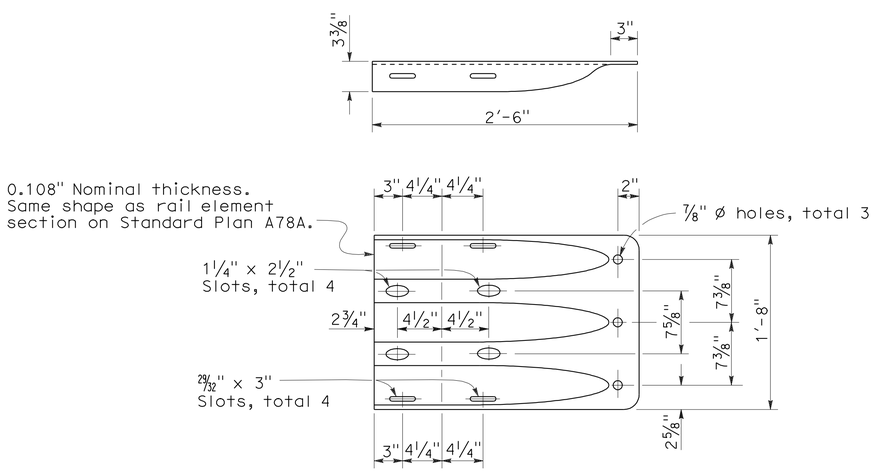

END CAP
(TYPE TC)

STATE OF CALIFORNIA
DEPARTMENT OF TRANSPORTATION

THRIE BEAM BARRIER STANDARD HARDWARE DETAILS

NO SCALE

RSP A78C1 DATED JUNE 6, 2008 SUPERSEDES STANDARD PLAN A78C1
DATED MAY 1, 2006 - PAGE 85 OF THE STANDARD PLANS BOOK DATED MAY 2006.

REVISED STANDARD PLAN RSP A78C1

2006 REVISED STANDARD PLAN RSP A78C1

4-21-08

DIST	COUNTY	ROUTE	POST MILES TOTAL PROJECT	SHEET NO.	TOTAL SHEETS
12	Ora	241	15.5/39.0	99	117

Randell D. Hiatt
REGISTERED CIVIL ENGINEER

October 20, 2006
PLANS APPROVAL DATE

REGISTERED PROFESSIONAL ENGINEER
Randell D. Hiatt
No. C50200
Exp. 6-30-07
CIVIL
STATE OF CALIFORNIA

The State of California or its officers or agents shall not be responsible for the accuracy or completeness of electronic copies of this plan sheet.

To accompany plans dated 10-18-10

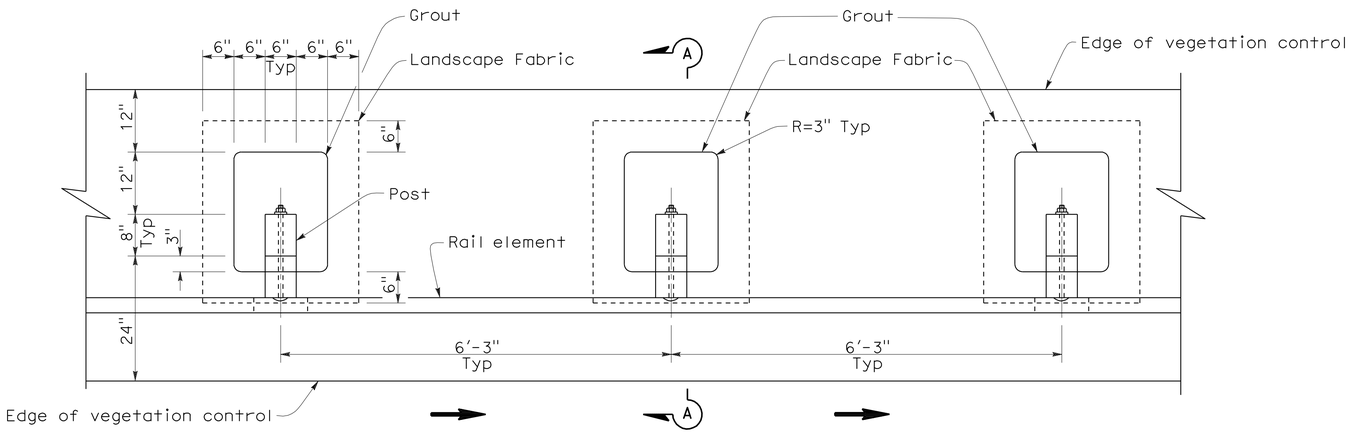

PLAN

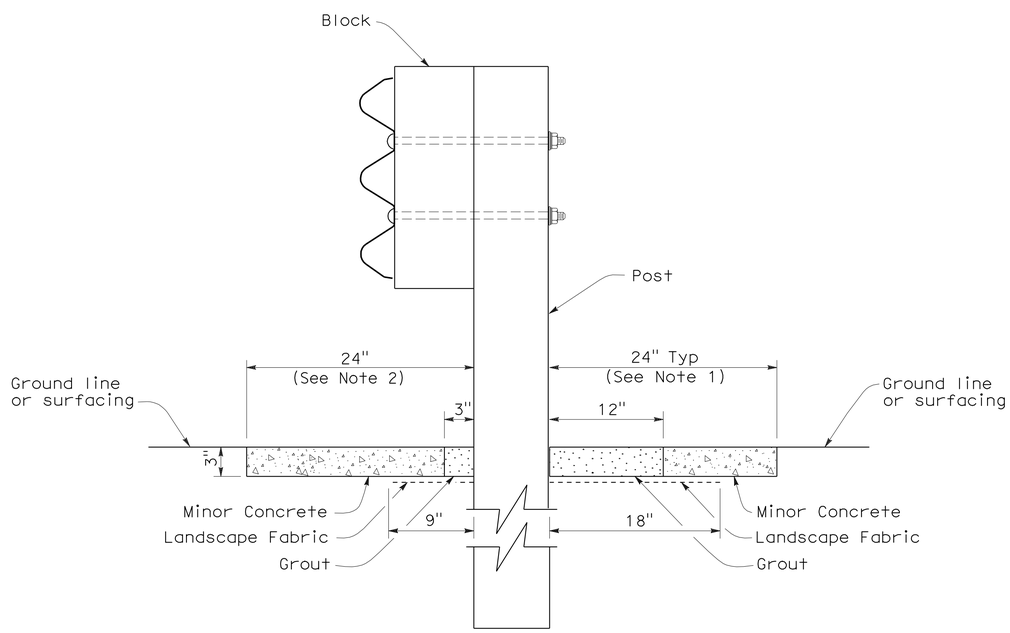

SECTION A-A

NOTES:

1. Where the distance between back of post and hinge point is less than 24", vegetation control to be constructed flush with the back edge of the post.
2. Where dike is constructed under barrier, construct vegetation control to back edge of dike. Where paved shoulder is constructed within 24" in front of the post, construct vegetation control to the edge of paved shoulder.
3. Direction of adjacent traffic indicated by ➡.

STATE OF CALIFORNIA
DEPARTMENT OF TRANSPORTATION

SINGLE THRIE BEAM BARRIER TYPICAL VEGETATION CONTROL STANDARD BARRIER RAILING SECTION

NO SCALE

NSP A78C3 DATED OCTOBER 20, 2006 SUPPLEMENTS THE STANDARD PLANS BOOK DATED MAY 2006.

NEW STANDARD PLAN NSP A78C3

2006 NEW STANDARD PLAN NSP A78C3

7-17-06

DIST	COUNTY	ROUTE	POST MILES TOTAL PROJECT	SHEET NO.	TOTAL SHEETS
12	Ora	241	15.5/39.0	100	117

Randell D. Hiatt
REGISTERED CIVIL ENGINEER

October 20, 2006
PLANS APPROVAL DATE

REGISTERED PROFESSIONAL ENGINEER
Randell D. Hiatt
No. C50200
Exp. 6-30-07
CIVIL
STATE OF CALIFORNIA

The State of California or its officers or agents shall not be responsible for the accuracy or completeness of electronic copies of this plan sheet.

To accompany plans dated 10-18-10

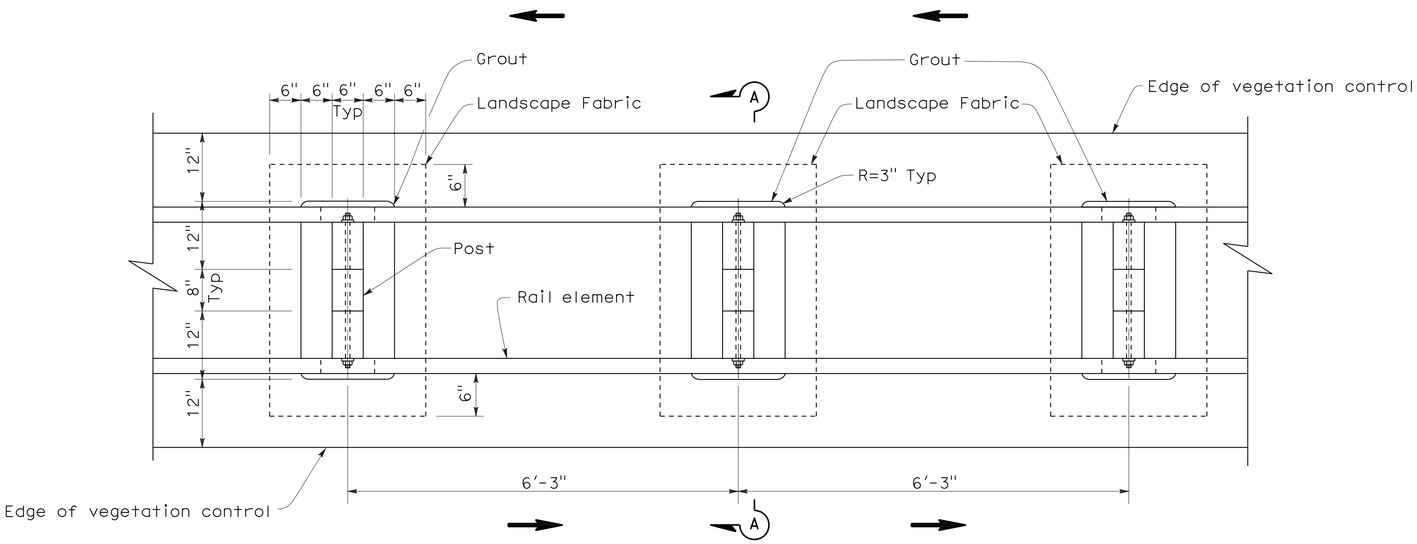

PLAN

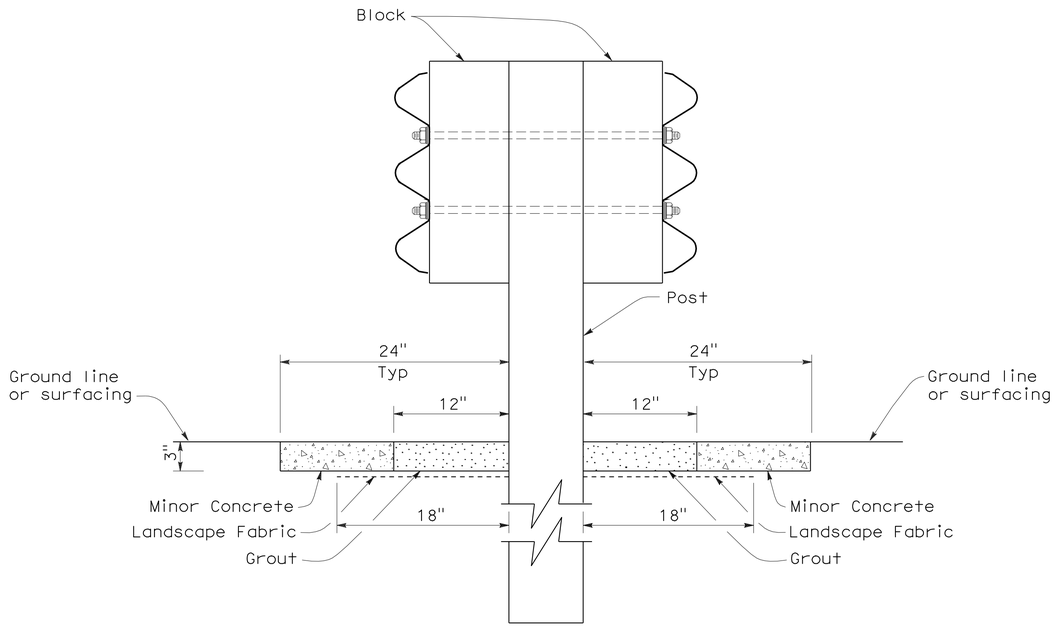

SECTION A-A

NOTE:

1. Direction of adjacent traffic indicated by ⟶.

STATE OF CALIFORNIA
DEPARTMENT OF TRANSPORTATION

DOUBLE THRIE BEAM BARRIER TYPICAL VEGETATION CONTROL STANDARD BARRIER RAILING SECTION

NO SCALE

NSP A78C4 DATED OCTOBER 20, 2006 SUPPLEMENTS THE STANDARD PLANS BOOK DATED MAY 2006.

NEW STANDARD PLAN NSP A78C4

2006 NEW STANDARD PLAN NSP A78C4

7-17-06

DIST	COUNTY	ROUTE	POST MILES TOTAL PROJECT	SHEET NO.	TOTAL SHEETS
12	Ora	241	15.5/39.0	101	117

Randell D. Hiatt
REGISTERED CIVIL ENGINEER

October 20, 2006
PLANS APPROVAL DATE

REGISTERED PROFESSIONAL ENGINEER
Randell D. Hiatt
No. C50200
Exp. 6-30-07
CIVIL
STATE OF CALIFORNIA

The State of California or its officers or agents shall not be responsible for the accuracy or completeness of electronic copies of this plan sheet.

To accompany plans dated 10-18-10

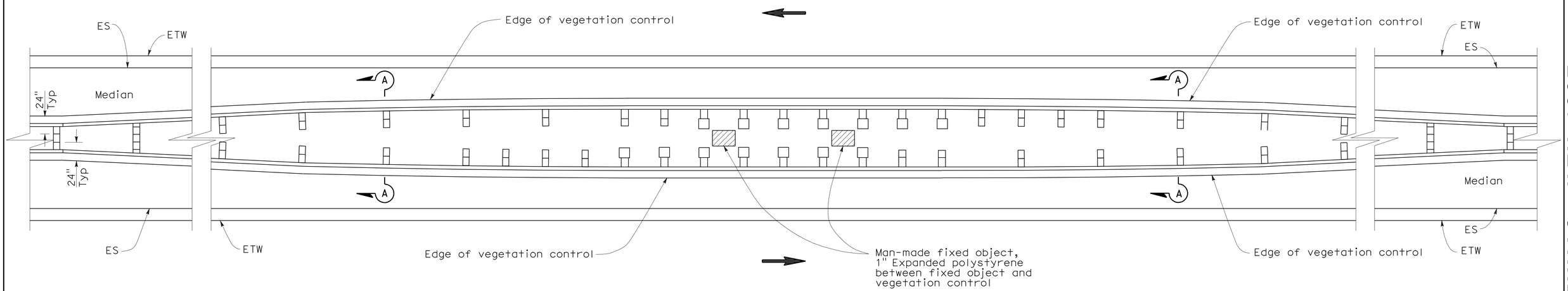

PLAN

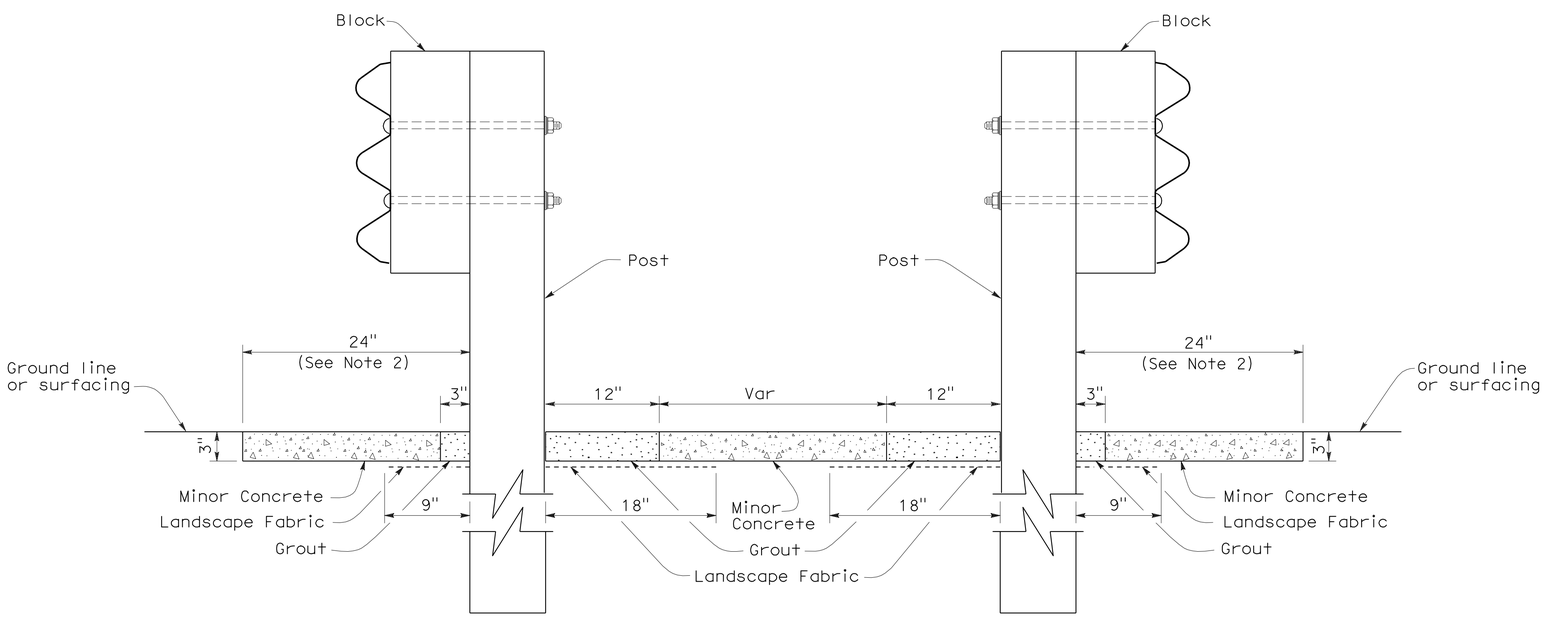

SECTION A-A

NOTES:

1. See New Standard Plan NSP A78C3 for additional vegetation control.
2. Where dike is constructed under barrier, construct vegetation control to back edge of dike. Where paved shoulder is constructed within 24" in front of the post, construct vegetation control to the edge of paved shoulder.
3. Direction of adjacent traffic indicated by ←.

STATE OF CALIFORNIA
DEPARTMENT OF TRANSPORTATION

THRIE BEAM BARRIER TYPICAL VEGETATION CONTROL AT FIXED OBJECTS IN MEDIAN

NO SCALE

NSP A78C5 DATED OCTOBER 20, 2006 SUPPLEMENTS THE STANDARD PLANS BOOK DATED MAY 2006.

NEW STANDARD PLAN NSP A78C5

2006 NEW STANDARD PLAN NSP A78C5

7-17-06

DIST	COUNTY	ROUTE	POST MILES TOTAL PROJECT	SHEET NO.	TOTAL SHEETS
12	Ora	241	15.5/39.0	102	117

Randell D. Hiatt
REGISTERED CIVIL ENGINEER

October 20, 2006
PLANS APPROVAL DATE

REGISTERED PROFESSIONAL ENGINEER
Randell D. Hiatt
No. C50200
Exp. 6-30-07
CIVIL
STATE OF CALIFORNIA

The State of California or its officers or agents shall not be responsible for the accuracy or completeness of electronic copies of this plan sheet.

To accompany plans dated 10-18-10

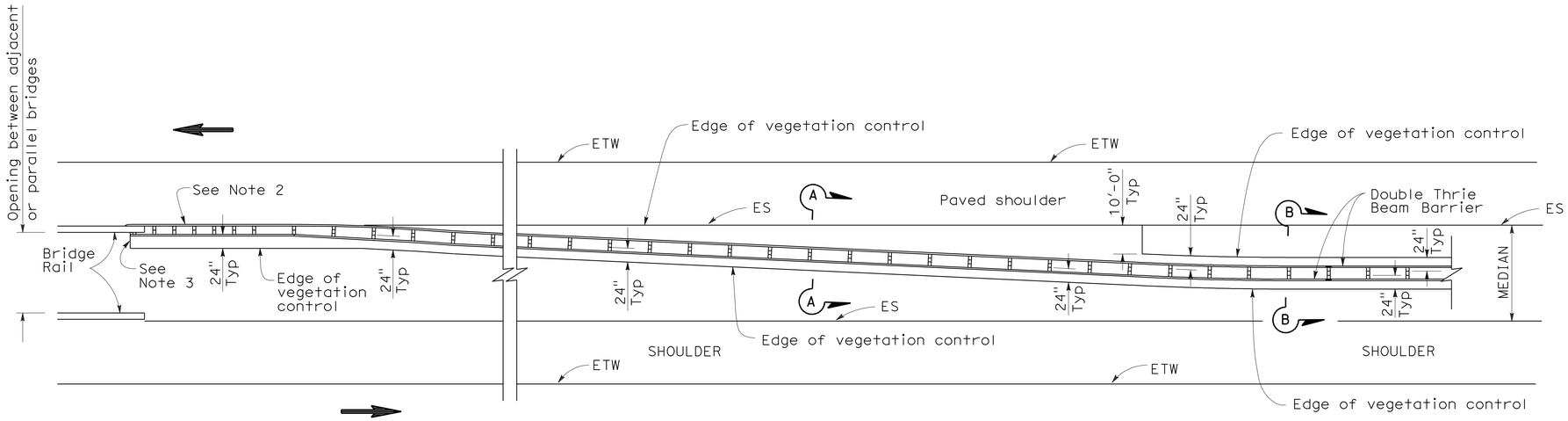

PLAN

NOTES:

1. See New Standard Plan NSP A78C4 for additional vegetation control details.
2. Where dike is constructed under barrier, construct vegetation control to back edge of dike. Where paved shoulder is constructed within 24" in front of the post, construct vegetation control to the edge of paved shoulder.
3. End vegetation control at end of backside rail element attached to bridge railing.
4. Direction of adjacent traffic indicated by ←.

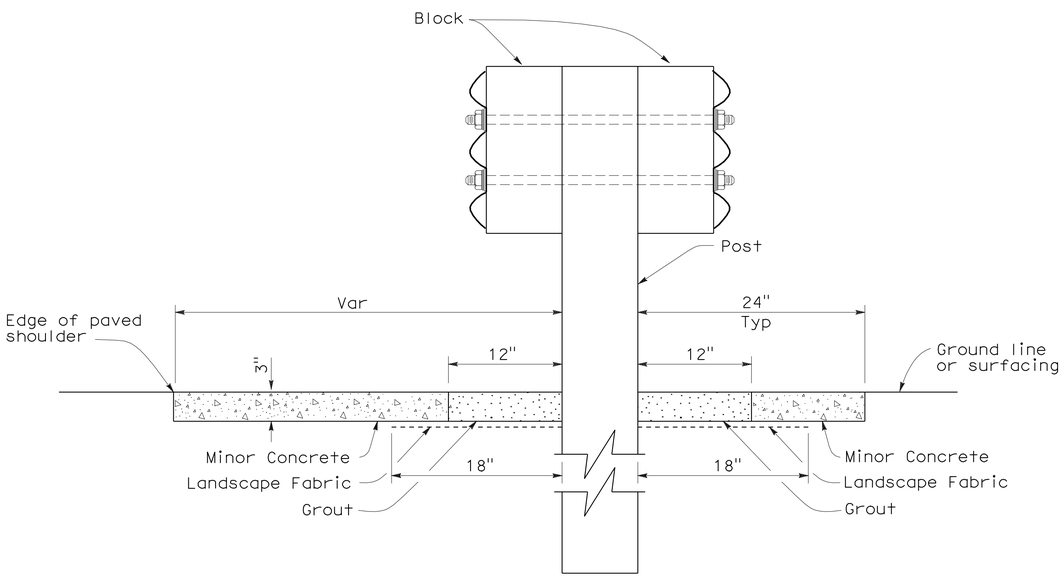

SECTION A-A

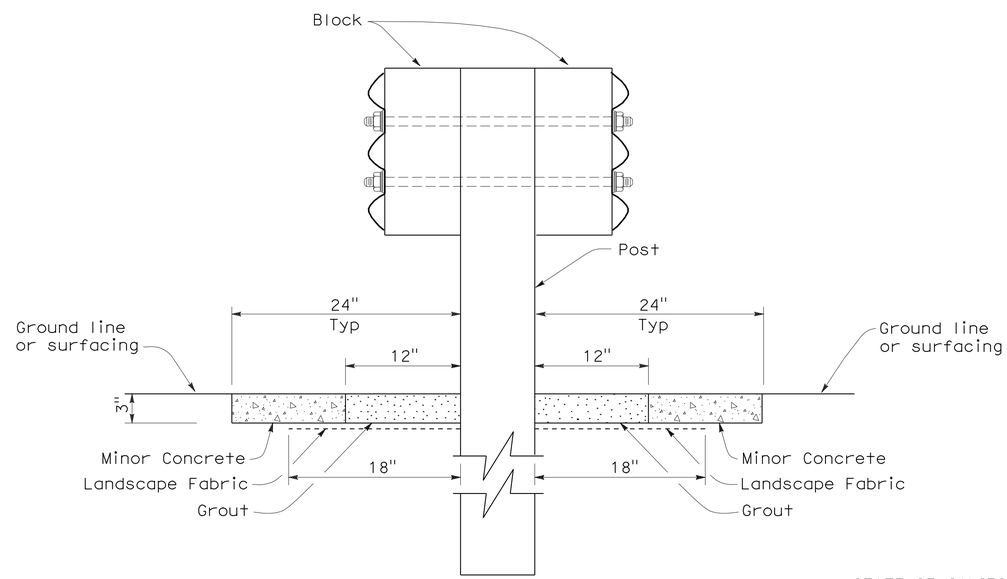

SECTION B-B

STATE OF CALIFORNIA
DEPARTMENT OF TRANSPORTATION

THRIE BEAM BARRIER TYPICAL VEGETATION CONTROL AT STRUCTURE APPROACH

NO SCALE

NSP A78C6 DATED OCTOBER 20, 2006 SUPPLEMENTS THE STANDARD PLANS BOOK DATED MAY 2006.

NEW STANDARD PLAN NSP A78C6

2006 NEW STANDARD PLAN NSP A78C6

7-17-06

DIST	COUNTY	ROUTE	POST MILES TOTAL PROJECT	SHEET NO.	TOTAL SHEETS
12	Ora	241	15.5/39.0	103	117

Randell D. Hiatt
REGISTERED CIVIL ENGINEER

June 6, 2008
PLANS APPROVAL DATE

REGISTERED PROFESSIONAL ENGINEER
Randell D. Hiatt
No. C50200
Exp. 6-30-09
CIVIL
STATE OF CALIFORNIA

The State of California or its officers or agents shall not be responsible for the accuracy or completeness of electronic copies of this plan sheet.

To accompany plans dated 10-18-10

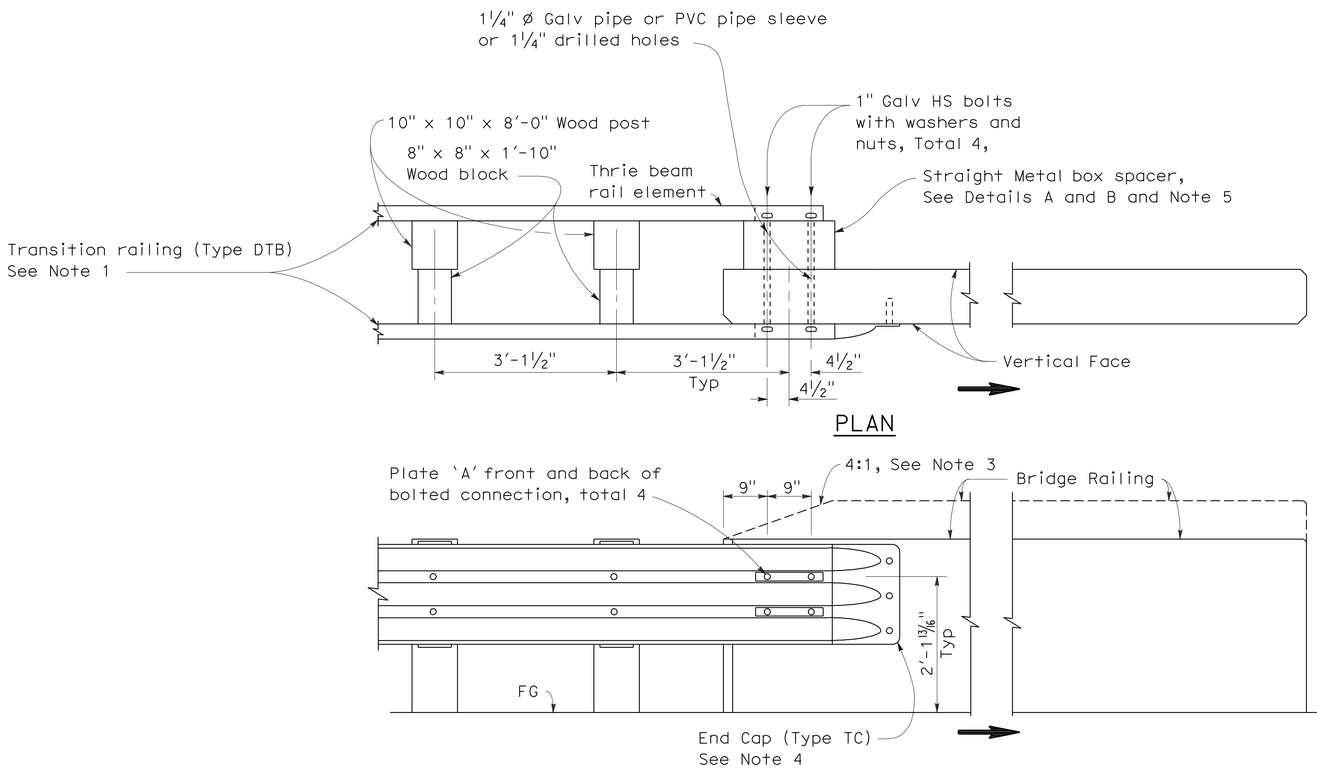

CONNECTION DETAIL 1A
See Note 2

DOUBLE THRIE BEAM BARRIER CONNECTION TO BRIDGE RAILING WITHOUT SIDEWALK

NOTES:

1. For additional details of Transition Railing (Type DTB), see Standard Plans A78K. Transition Railing (Type DTB) transitions the standard 12 gage double thrie beam barrier to a heavier gage double thrie beam railing section then to a heavier gage nested double thrie beam barrier section which then is connected to the concrete bridge railing.
2. For typical use of Connection Detail 1A, see Type 25A Connection Layout on Revised Standard Plan RSP A78H.
3. Where the height of the bridge railing exceeds the height of the thrie beam railing by more than 1" at Connection Detail 1A, taper the top of the end of the bridge railing at 4:1 to match the top elevation of the thrie beam railing.
4. For details of End Cap (Type TC), see Standard Plan A78C1.
5. See Standard Plan A78K for additional details regarding depth dimension for straight metal box spacer.
6. Direction of adjacent traffic indicated by ⟹.

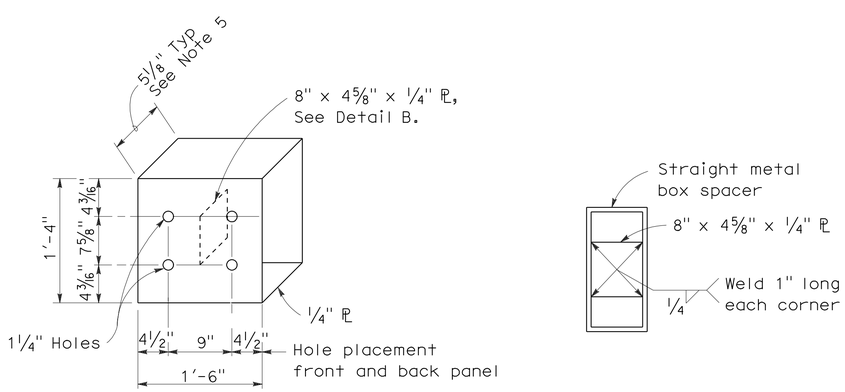

DETAIL A

DETAIL B

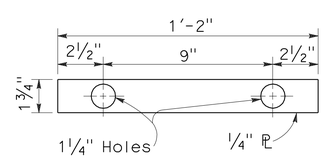

DETAIL C

STRAIGHT METAL BOX SPACER

PLATE 'A'

STATE OF CALIFORNIA
DEPARTMENT OF TRANSPORTATION

DOUBLE THRIE BEAM BARRIER CONNECTION TO BRIDGE RAILINGS WITHOUT SIDEWALKS

NO SCALE

RSP A78F1 DATED JUNE 6, 2008 SUPERSEDES STANDARD PLAN A78F1
DATED MAY 1, 2006 - PAGE 92 OF THE STANDARD PLANS BOOK DATED MAY 2006.

REVISED STANDARD PLAN RSP A78F1

2006 REVISED STANDARD PLAN RSP A78F1

12-10-07

DIST	COUNTY	ROUTE	POST MILES TOTAL PROJECT	SHEET NO.	TOTAL SHEETS
12	Ora	241	15.5/39.0	104	117

Randell D. Hiatt
REGISTERED CIVIL ENGINEER

June 6, 2008
PLANS APPROVAL DATE

REGISTERED PROFESSIONAL ENGINEER
Randell D. Hiatt
No. C50200
Exp. 6-30-09
CIVIL
STATE OF CALIFORNIA

The State of California or its officers or agents shall not be responsible for the accuracy or completeness of electronic copies of this plan sheet.

To accompany plans dated 10-18-10

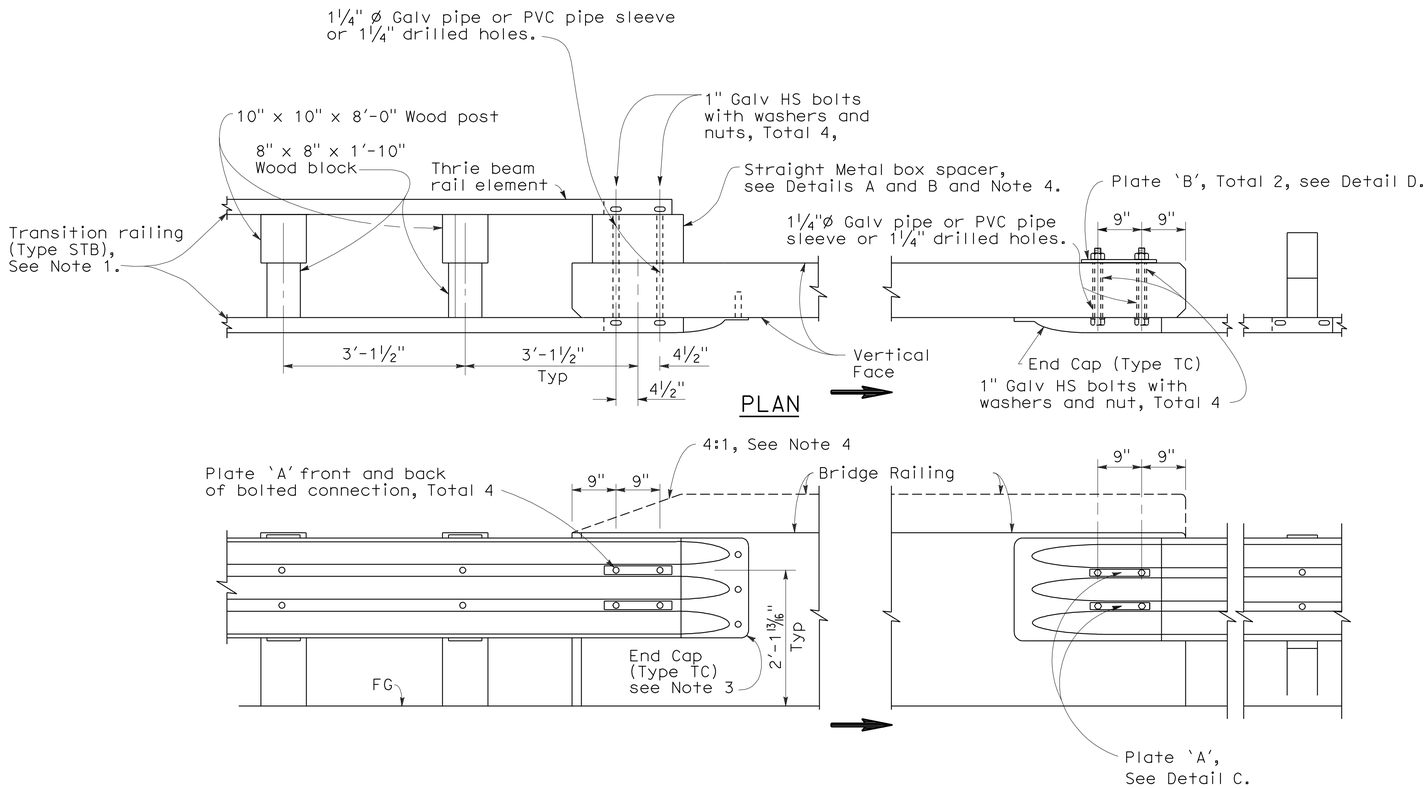

SINGLE THRIE BEAM BARRIER CONNECTION TO BRIDGE RAILING WITHOUT SIDEWALK

NOTES:

1. For additional details of Transition Railing (Type STB), see Standard Plans A78J. Transition Railing (Type STB) transitions the standard 12 gage single thrie beam barrier to a heavier gage single thrie beam railing section then to a heavier gage nested double thrie beam barrier section which then is connected to the concrete bridge railing.
2. Where the height of the bridge railing exceeds the height of the thrie beam railing by more than 1" at Connection Detail 2A, taper the top of the end of the bridge railing at 4:1 to match the top elevation of the thrie beam railing.
3. For details of End Cap (Type TC), see Standard Plan A78C1.
4. See Standard Plan A78J for additional details regarding depth dimension for straight metal box spacer.
5. Direction of adjacent traffic indicated by ⟹.

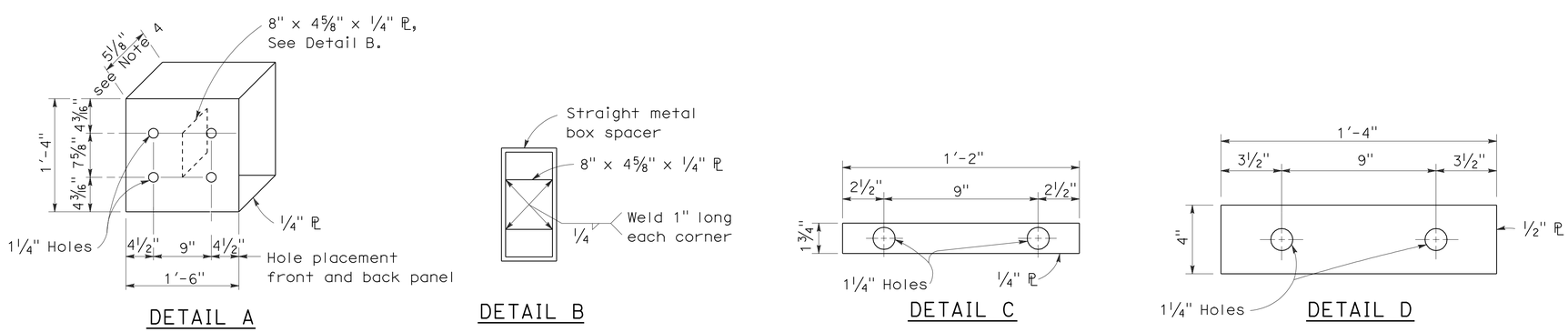

STRAIGHT METAL BOX SPACER

PLATE 'A'

PLATE 'B'

STATE OF CALIFORNIA
DEPARTMENT OF TRANSPORTATION

SINGLE THRIE BEAM BARRIER CONNECTIONS TO BRIDGE RAILINGS WITHOUT SIDEWALKS

NO SCALE

RSP A78F2 DATED JUNE 6, 2008 SUPERSEDES STANDARD PLAN A78F2
DATED MAY 1, 2006 - PAGE 93 OF THE STANDARD PLANS BOOK DATED MAY 2006.

REVISED STANDARD PLAN RSP A78F2

2006 REVISED STANDARD PLAN RSP A78F2

12-10-07

DIST	COUNTY	ROUTE	POST MILES TOTAL PROJECT	SHEET NO.	TOTAL SHEETS
12	Ora	241	15.5/39.0	105	117

Randell D. Hiatt
REGISTERED CIVIL ENGINEER

June 6, 2008
PLANS APPROVAL DATE

REGISTERED PROFESSIONAL ENGINEER Randell D. Hiatt No. C50200 Exp. 6-30-09 CIVIL STATE OF CALIFORNIA

The State of California or its officers or agents shall not be responsible for the accuracy or completeness of electronic copies of this plan sheet.

To accompany plans dated 10-18-10

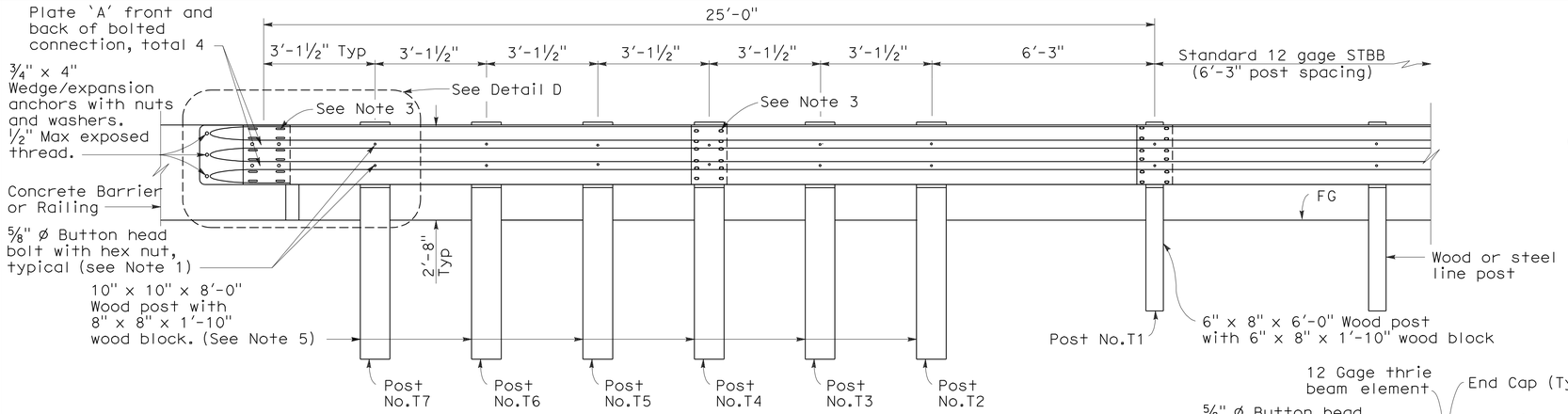

ELEVATION

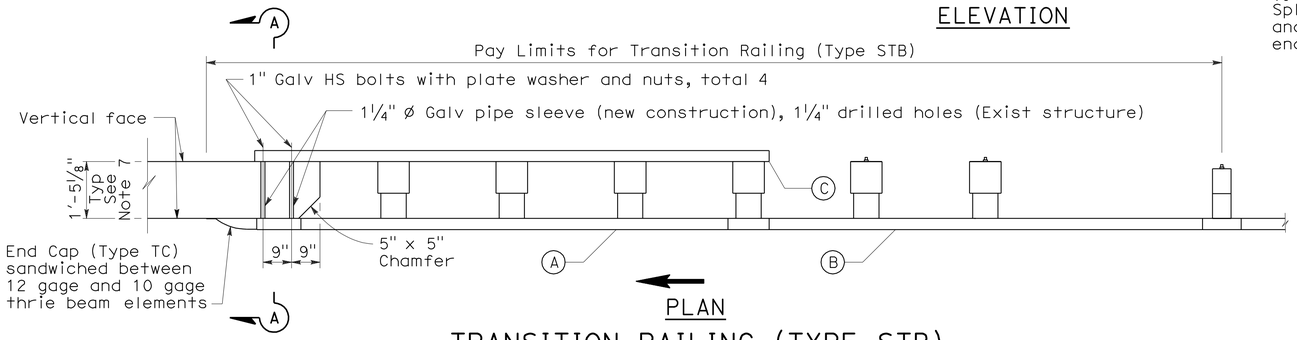

PLAN

TRANSITION RAILING (TYPE STB)

(No Blockout Attachment)

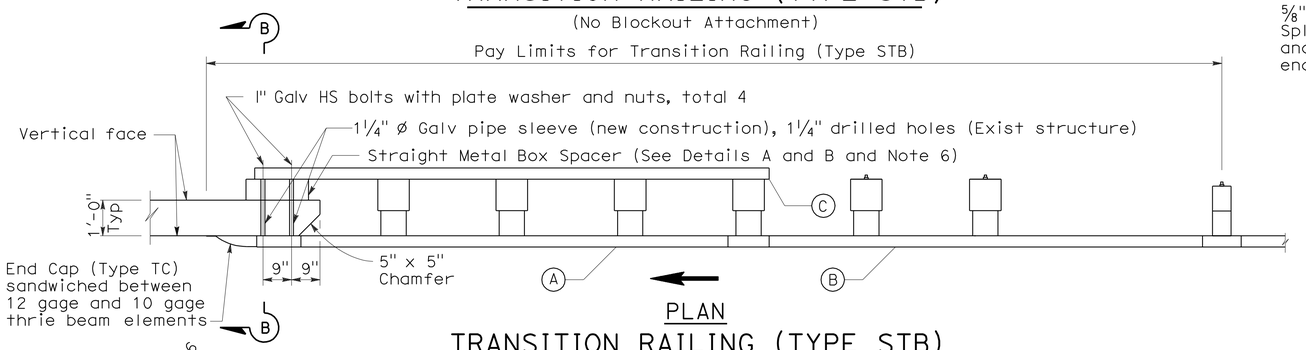

PLAN

TRANSITION RAILING (TYPE STB)

(Blockout Attachment)

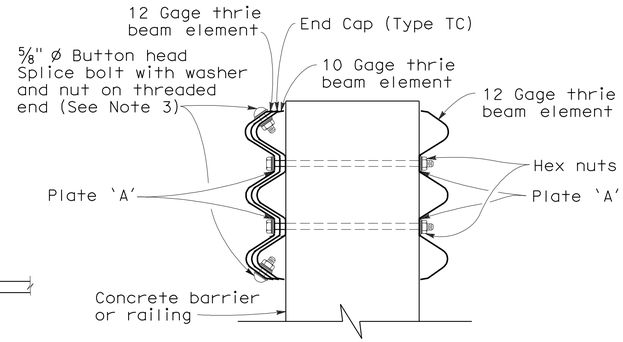

SECTION A-A

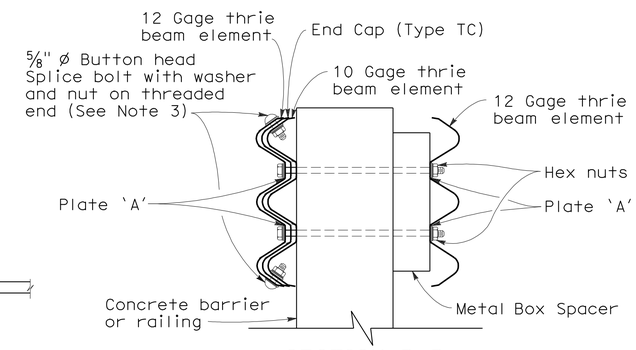

SECTION B-B

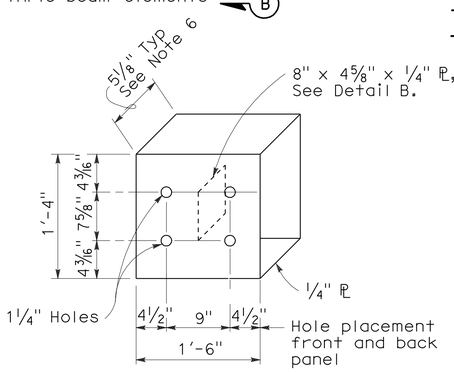

DETAIL A

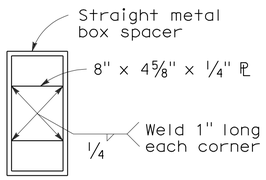

DETAIL B

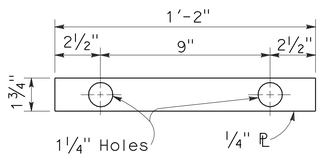

DETAIL C

STRAIGHT METAL BOX SPACER

PLATE 'A'

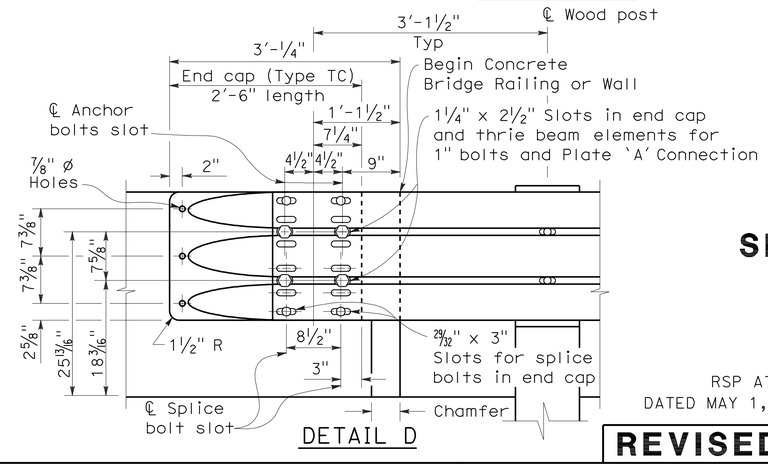

DETAIL D

LEGEND

(A) Nested thrie beam elements (one 12 gage element nested over one 10 gage element).

(B) One 10 gage thrie beam element.

(C) One 12 gage thrie beam element.

10 gage = 0.135" thick

12 gage = 0.108" thick

NOTES:

1. Use ⅝" ø Button head bolts and hex nuts for connection to posts. No washer on rail face for bolted connections to post.
2. The nested rail elements, end cap and single 10 gage thrie beam element, may be spliced together prior to bolting the elements to the wood post and concrete barrier or railing.
3. Exterior splice bolt holes for rail element splices at Post No.T4 and the connection to the concrete barrier or railing shall be the standard 29⁄32" x 1⅛" slot size. Interior splice bolt holes at these locations may be increased up to 1¼" ø. Only the top 2 and the bottom 2 splice bolts with washers and nuts are required for rail splices at Post No.T4 and the connection to the concrete barrier or railing.
4. Direction of adjacent traffic indicated by ⟶.
5. The top elevation of Post Nos.T2 through T7 shall not project more than 1" above the top elevation of the rail element.
6. The depth of the metal box spacer varies from the 5⅛" to 1½" and is dependent on the width of the concrete railing or wall. The combined dimension for the depth of the metal box spacer plus the width of railing or wall is typically 17⅛". Where the space between the backside of the concrete railing or wall and the rear thrie beam element is less than 1½" metal plates similar to Plate 'A' are to be used as spacers.
7. Where the width of the concrete railing or wall is greater than 17⅛", wood blocks are to be used to fill the space created between the backside of Post No.4 through No.7 and the rear thrie beam element. These wood blocks shall be 8" in width and 1'-2" in length. The dimension between the front thrie beam element and the rear thrie beam element is to match the width of the concrete railing or wall.
8. For details of End Cap (Type TC), see Revised Standard Plan RSP A78C1.

STATE OF CALIFORNIA
DEPARTMENT OF TRANSPORTATION

SINGLE THRIE BEAM BARRIER TRANSITION RAILING (TYPE STB)

NO SCALE

RSP A78J DATED JUNE 6, 2008 SUPERSEDES STANDARD PLAN A78J DATED MAY 1, 2006 - PAGE 97 OF THE STANDARD PLANS BOOK DATED MAY 2006.

REVISED STANDARD PLAN RSP A78J

2006 REVISED STANDARD PLAN RSP A78J

5-1-08

DIST	COUNTY	ROUTE	POST MILES TOTAL PROJECT	SHEET NO.	TOTAL SHEETS
12	Ora	241	15.5/39.0	106	117

LICENSED LANDSCAPE ARCHITECT

April 3, 2009
PLANS APPROVAL DATE

The State of California or its officers or agents shall not be responsible for the accuracy or completeness of electronic copies of this plan sheet.

LICENSED LANDSCAPE ARCHITECT
Gregory A. Balzer 3878
Gregory A. Balzer
Licensure
02-28-11
Renewal Date
03-04-09
Date
STATE OF CALIFORNIA

To accompany plans dated 10-18-10

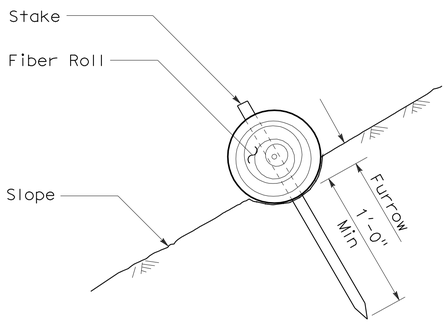

SECTION

FIBER ROLL
(TYPE 1)

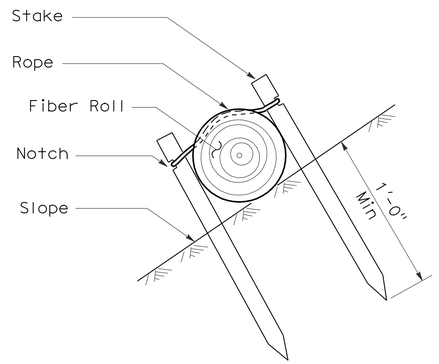

SECTION

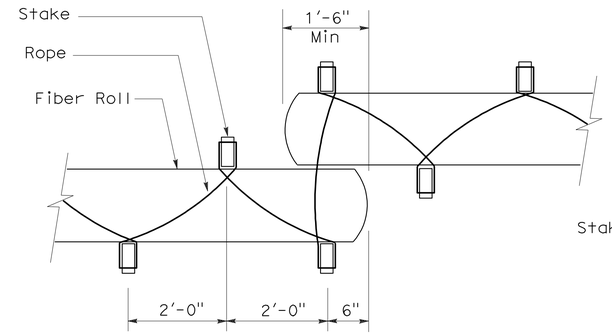

PLAN

FIBER ROLL
(TYPE 2)

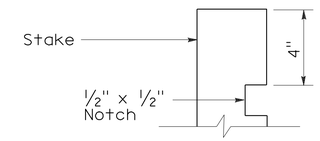

ELEVATION

STAKE NOTCH DETAIL

NOTES:

1. Fiber roll spacing varies depending upon slope inclination.
2. Installations shown in the perspectives are for slope inclination of 10:1 and steeper.

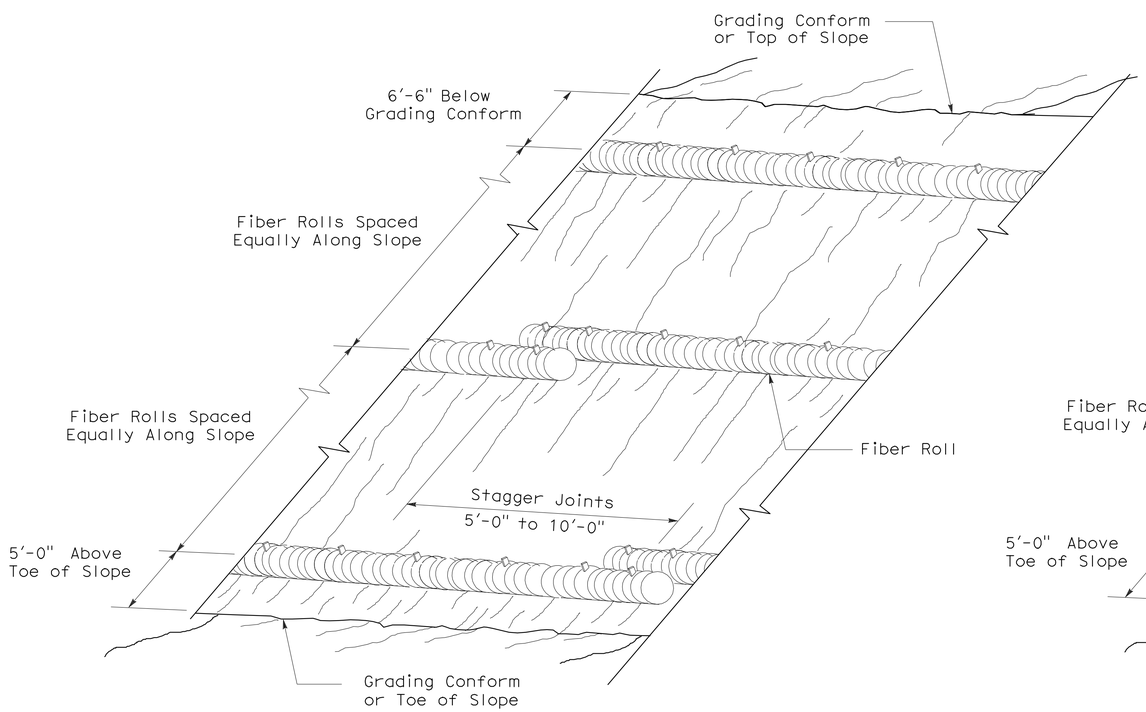

PERSPECTIVE

FIBER ROLL (TYPE 1)

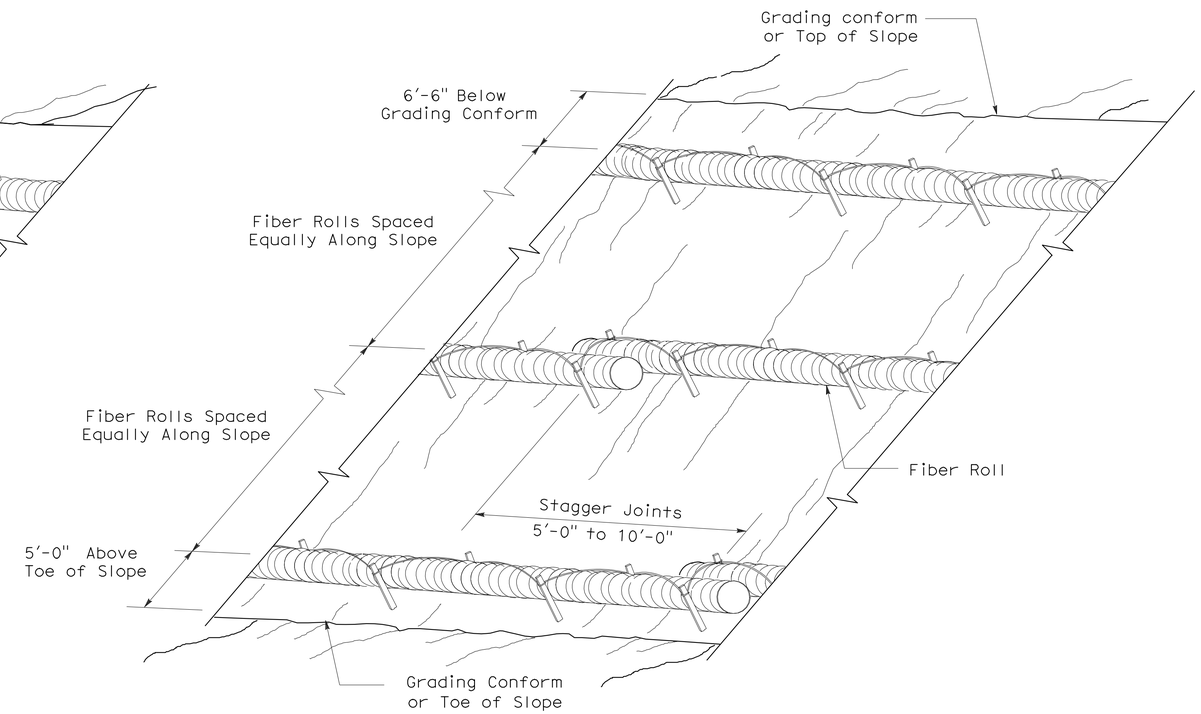

PERSPECTIVE

FIBER ROLL (TYPE 2)

STATE OF CALIFORNIA
DEPARTMENT OF TRANSPORTATION

EROSION CONTROL DETAILS (FIBER ROLL)

NO SCALE

RNSP H51 DATED APRIL 3, 2009 SUPERSEDES NSP H51 DATED DECEMBER 1, 2006 THAT SUPPLEMENTS THE STANDARD PLANS BOOK DATED MAY 2006.

REVISED NEW STANDARD PLAN RNSP H51

2006 REVISED NEW STANDARD PLAN RNSP H51

DIST	COUNTY	ROUTE	POST MILES TOTAL PROJECT	SHEET NO.	TOTAL SHEETS
12	Ora	241	15.5/39.0	107	117

Randell D. Hiatt
REGISTERED CIVIL ENGINEER

June 6, 2008
PLANS APPROVAL DATE

REGISTERED PROFESSIONAL ENGINEER
Randell D. Hiatt
No. C50200
Exp. 6-30-09
CIVIL
STATE OF CALIFORNIA

The State of California or its officers or agents shall not be responsible for the accuracy or completeness of electronic copies of this plan sheet.

To accompany plans dated 10-18-10

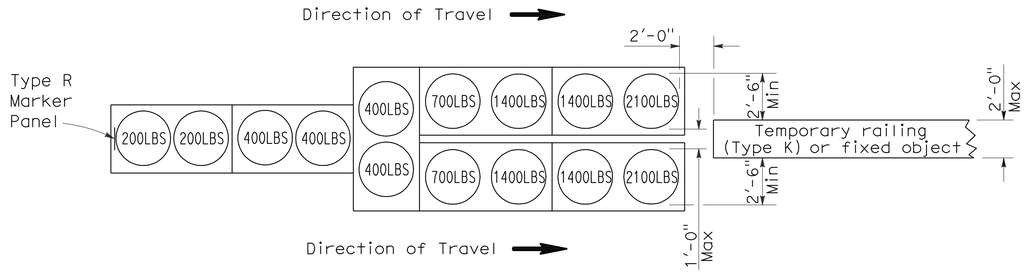

ARRAY 'TU14'

Approach speed 45 mph or more

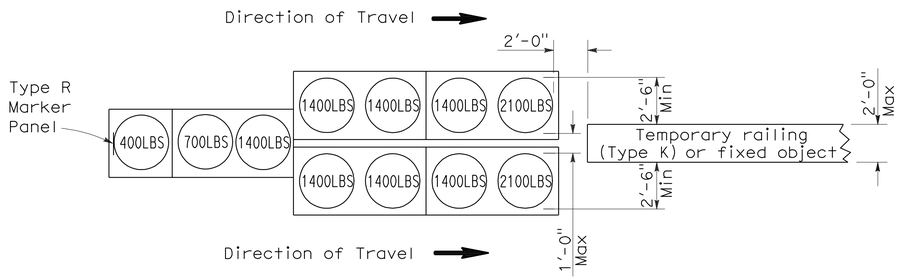

ARRAY 'TU11'

Approach speed less than 45 mph

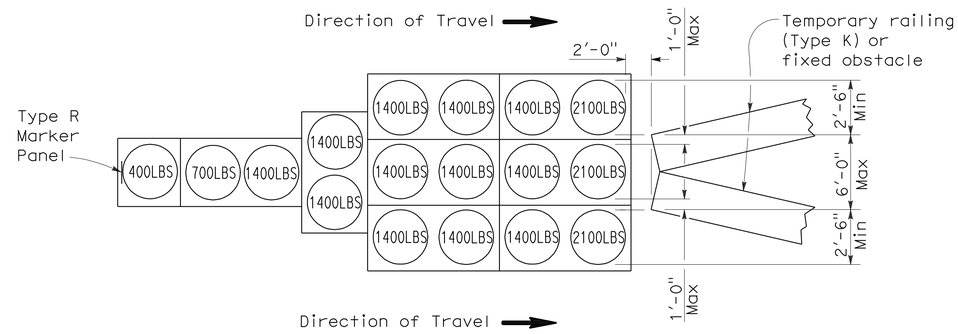

ARRAY 'TU17'

Approach speed less than 45 mph

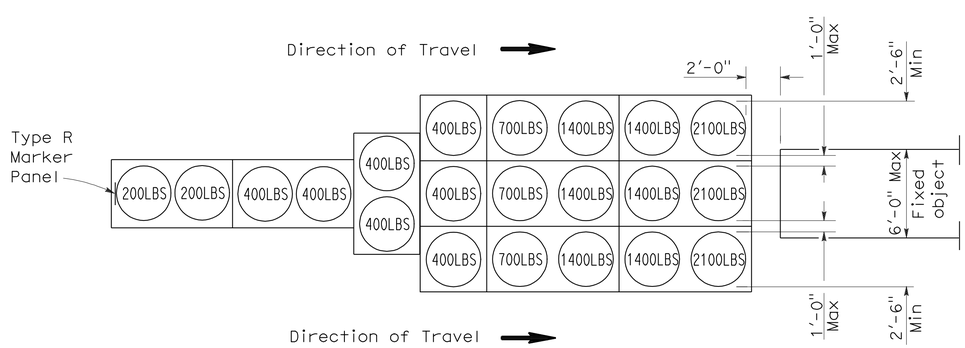

ARRAY 'TU21'

Approach speed 45 mph or more

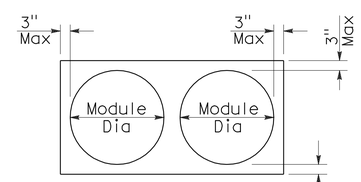

PLAN

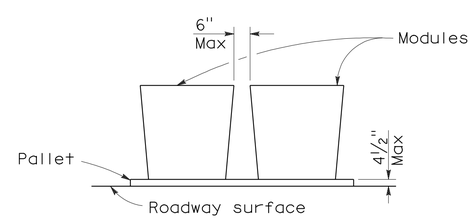

ELEVATION

CRASH CUSHION PALLET DETAIL

See Note 7

NOTES:

1. (XXX) Indicates sand filled module location and weight of sand in pounds for each module. Module spacing is based on the greater diameter of the module.
2. All sand weights are nominal.
3. Temporary crash cushion arrays shall not encroach on the traveled way.
4. Place the top of Type R marker panel 1" below the module lid.
5. Refer to Standard Plan A73B for marker details.
6. Approach speeds indicated conform to NCHRP 350 Report criteria.
7. Use of pallets is optional.

STATE OF CALIFORNIA
DEPARTMENT OF TRANSPORTATION

TEMPORARY CRASH CUSHION, SAND FILLED (UNIDIRECTIONAL)

NO SCALE

RSP T1A DATED JUNE 6, 2008 SUPERSEDES STANDARD PLAN T1A
DATED MAY 1, 2006 - PAGE 211 OF THE STANDARD PLANS BOOK DATED MAY 2006.

REVISED STANDARD PLAN RSP T1A

2006 REVISED STANDARD PLAN RSP T1A

DIST	COUNTY	ROUTE	POST MILES TOTAL PROJECT	SHEET NO.	TOTAL SHEETS
12	Ora	241	15.5/39.0	108	117

Randell D. Hiatt
REGISTERED CIVIL ENGINEER

June 6, 2008
PLANS APPROVAL DATE

REGISTERED PROFESSIONAL ENGINEER
Randell D. Hiatt
No. C50200
Exp. 6-30-09
CIVIL
STATE OF CALIFORNIA

The State of California or its officers or agents shall not be responsible for the accuracy or completeness of electronic copies of this plan sheet.

To accompany plans dated 10-18-10

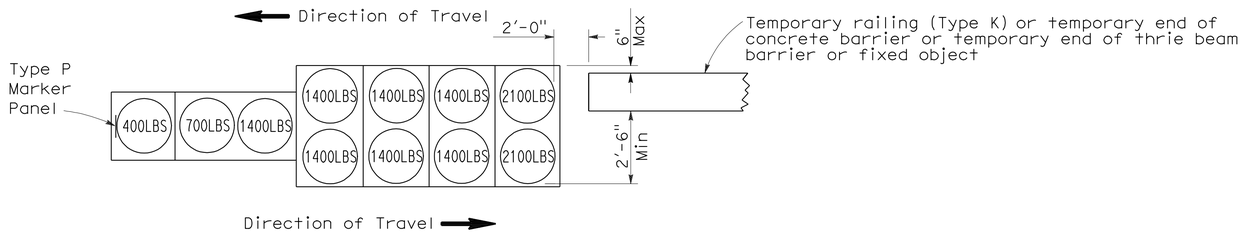

ARRAY 'TB11'

Approach speed less than 45 mph

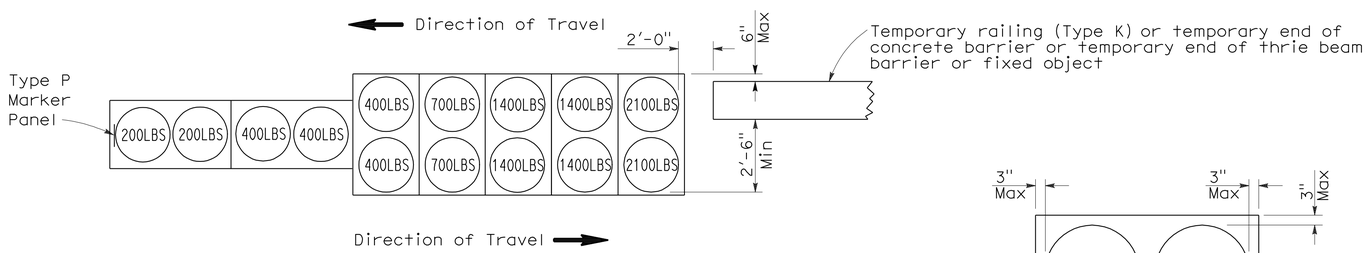

ARRAY 'TB14'

Approach speed 45 mph or more

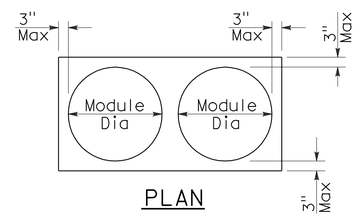

PLAN

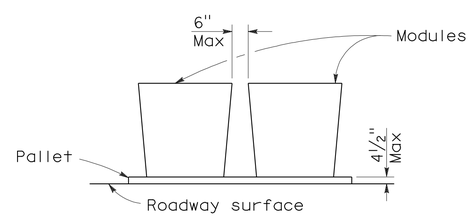

ELEVATION

CRASH CUSHION PALLET DETAIL

See Note 7

NOTES:

1. (XXX) Indicates sand filled module location and weight of sand in pounds for each module. Module spacing is based on the greater diameter of the module.
2. All sand weights are nominal.
3. Temporary crash cushion arrays shall not encroach on the traveled way.
4. Place the Type P marker panel so that the bottom of the panel rests upon the pallet.
5. Refer to Standard Plan A73B for marker details.
6. Approach speeds indicated conform to NCHRP 350 Report criteria.
7. Use of pallets is optional.

STATE OF CALIFORNIA
DEPARTMENT OF TRANSPORTATION

TEMPORARY CRASH CUSHION, SAND FILLED (BIDIRECTIONAL)

NO SCALE

RSP T1B DATED JUNE 6, 2008 SUPERSEDES STANDARD PLAN T1B
DATED MAY 1, 2006 - PAGE 212 OF THE STANDARD PLANS BOOK DATED MAY 2006.

REVISED STANDARD PLAN RSP T1B

2006 REVISED STANDARD PLAN RSP T1B

5-15-08

DIST	COUNTY	ROUTE	POST MILES TOTAL PROJECT	SHEET NO.	TOTAL SHEETS
12	Ora	241	15.5/39.0	109	117

Randell D. Hiatt
REGISTERED CIVIL ENGINEER

June 6, 2008
PLANS APPROVAL DATE

REGISTERED PROFESSIONAL ENGINEER
Randell D. Hiatt
No. C50200
Exp. 6-30-09
CIVIL
STATE OF CALIFORNIA

The State of California or its officers or agents shall not be responsible for the accuracy or completeness of electronic copies of this plan sheet.

To accompany plans dated 10-18-10

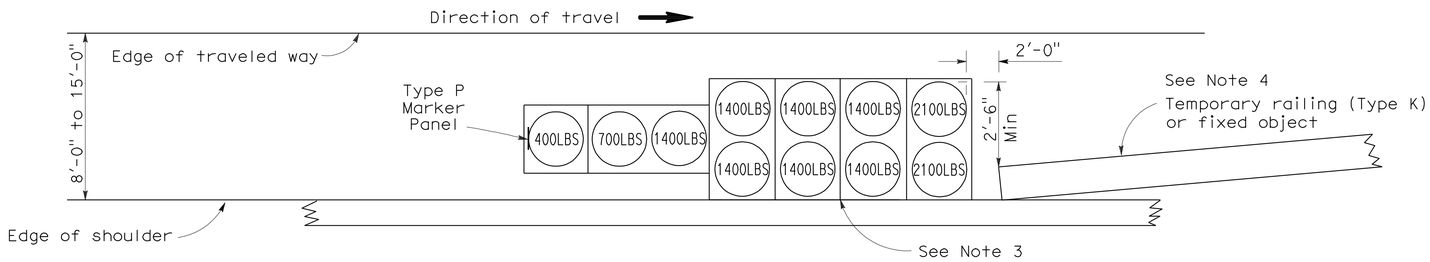

ARRAY 'TS11'

Approach speed less than 45 mph
See Note 9

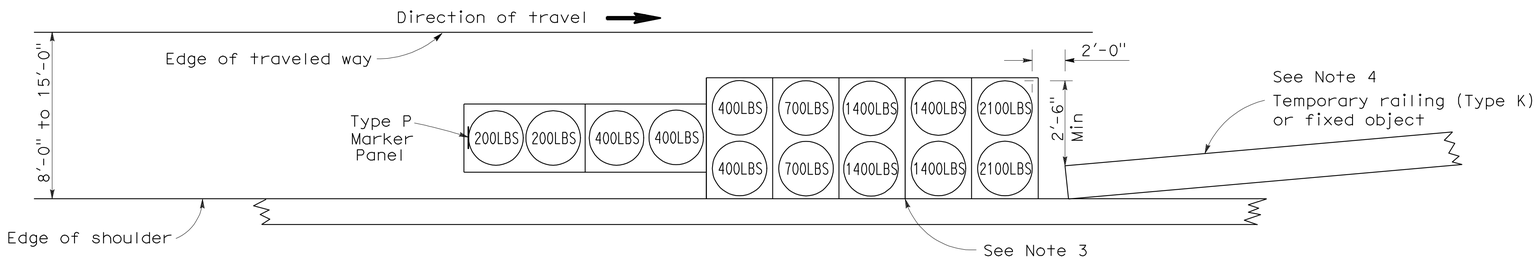

ARRAY 'TS14'

Approach speed 45 mph or more
See Note 9

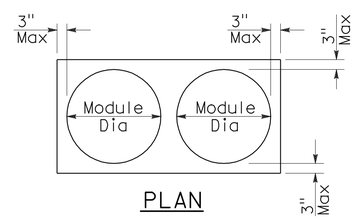

PLAN

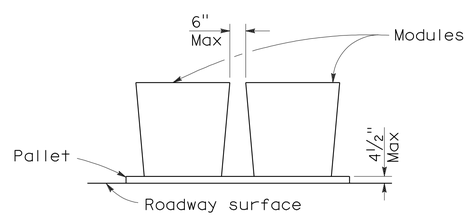

ELEVATION

CRASH CUSHION PALLET DETAIL

See Note 11

NOTES:

1. (XXX) Indicates sand filled module location and weight of sand in pounds for each module. Module spacing is based on the greater diameter of the module.
2. All sand weights are nominal.
3. The temporary crash cushion arrays shown on this plan shall be used only in locations where there will be traffic on one side of the temporary crash cushion array.
4. If the fixed object or approach end of the temporary railing is less than 15'-0" from the edge of traveled way, a temporary crash cushion is required in a construction or work zone.
5. Temporary crash cushion arrays shall not encroach on the traveled way.
6. Arrays for median shoulders shall conform to details shown on this plan for outside shoulders.
7. Place the Type P marker panel so that the bottom of the panel rests upon the pallet and faces traffic.
8. Refer to Standard Plan A73B for marker details.
9. For shoulder widths less than 8'-0", appropriate approved crash cushion protection, other than sand filled modules, shall be provided at fixed objects and at approach ends of temporary railing. The specific type of crash cushion shall be as shown on the project plans or as specified in the Special Provisions, or if not shown on the project plans or specified in the Special Provisions, shall be as approved by the Engineer.
10. Approach speeds indicated conform to NCHRP 350 Report criteria.
11. Use of pallets is optional.

STATE OF CALIFORNIA
DEPARTMENT OF TRANSPORTATION

TEMPORARY CRASH CUSHION, SAND FILLED (SHOULDER INSTALLATIONS)

NO SCALE

RSP T2 DATED JUNE 6, 2008 SUPERSEDES STANDARD PLAN T2
DATED MAY 1, 2006 - PAGE 213 OF THE STANDARD PLANS BOOK DATED MAY 2006.

REVISED STANDARD PLAN RSP T2

2006 REVISED STANDARD PLAN RSP T2

DIST	COUNTY	ROUTE	POST MILES TOTAL PROJECT	SHEET NO.	TOTAL SHEETS
12	Ora	241	15.5/39.0	110	117

LICENSED LANDSCAPE ARCHITECT

April 3, 2009
PLANS APPROVAL DATE

LICENSED LANDSCAPE ARCHITECT — Robert B. Schott — Signature — 11-30-10 Renewal Date — 2-25-09 Date — STATE OF CALIFORNIA

The State of California or its officers or agents shall not be responsible for the accuracy or completeness of electronic copies of this plan sheet.

To accompany plans dated 10-18-10

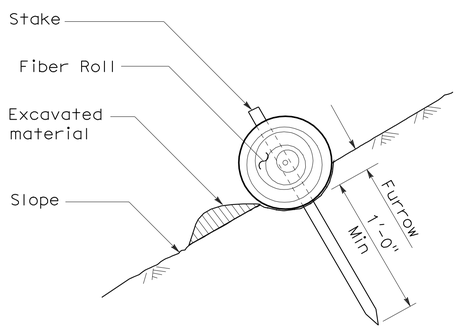

SECTION

TEMPORARY FIBER ROLL (TYPE 1)

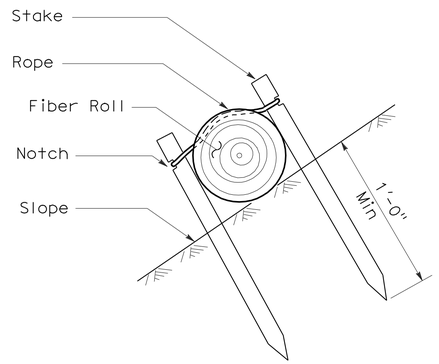

SECTION

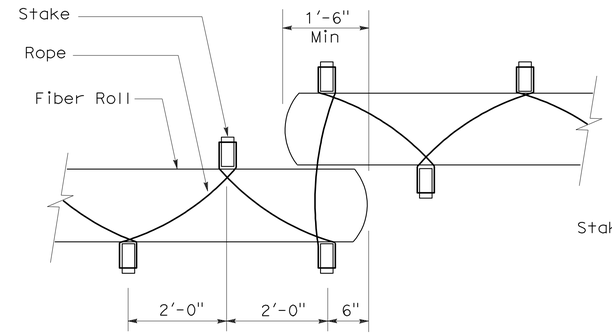

PLAN

TEMPORARY FIBER ROLL (TYPE 2)

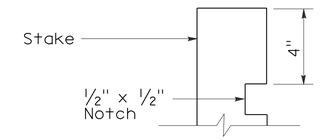

ELEVATION

STAKE NOTCH DETAIL

NOTES:

1. Temporary fiber roll spacing varies depending upon slope inclination.
2. Installations shown in the perspectives are for slope inclination of 10:1 and steeper.

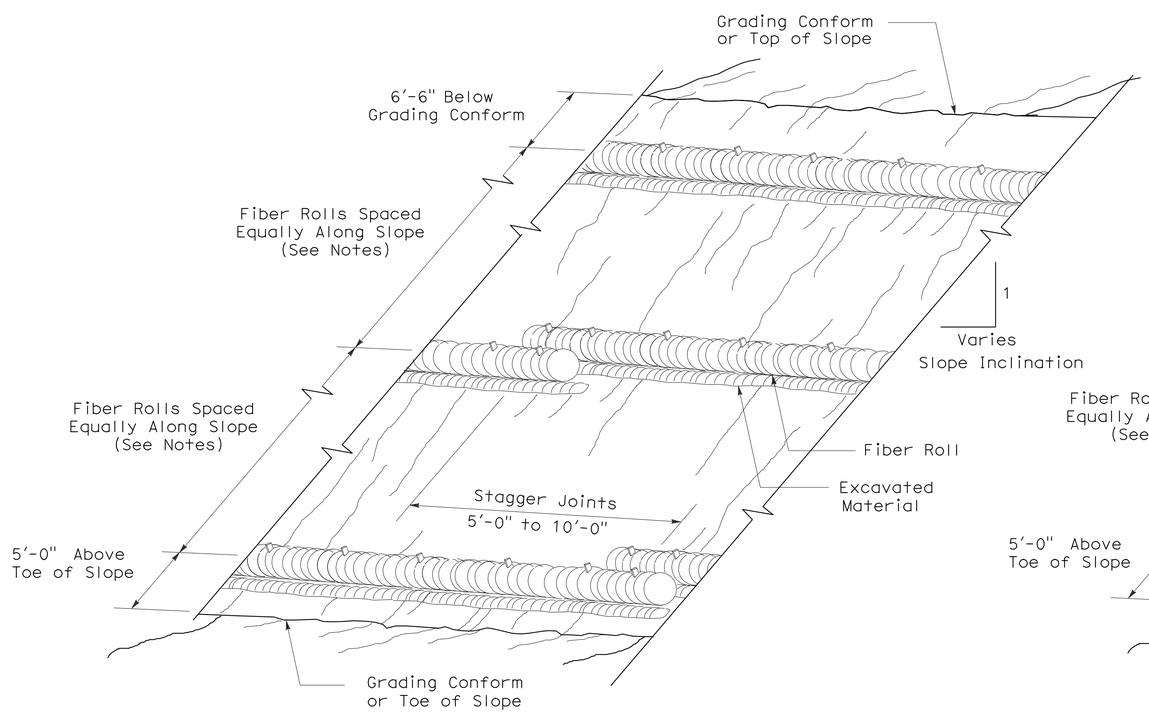

PERSPECTIVE

TEMPORARY FIBER ROLL (TYPE 1)

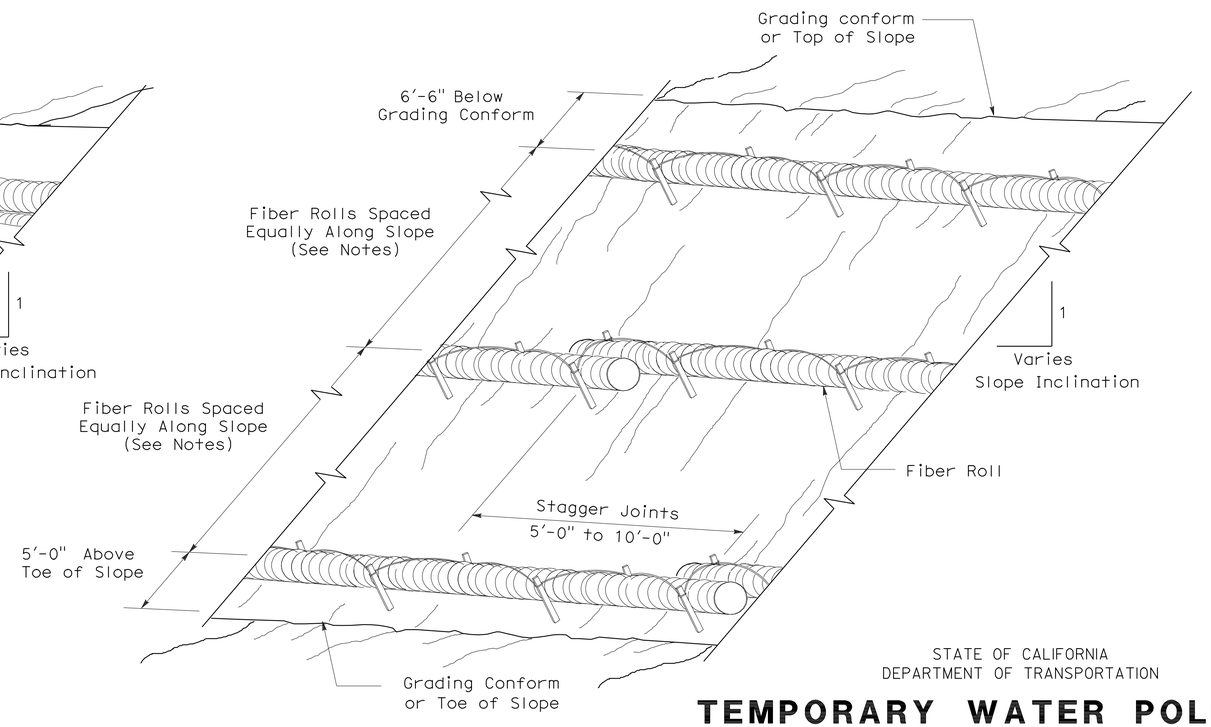

PERSPECTIVE

TEMPORARY FIBER ROLL (TYPE 2)

STATE OF CALIFORNIA
DEPARTMENT OF TRANSPORTATION

TEMPORARY WATER POLLUTION CONTROL DETAILS (TEMPORARY FIBER ROLL)

NO SCALE

RSP T56 DATED APRIL 3, 2009 SUPERSEDES STANDARD PLAN T56
DATED MAY 1, 2006 - PAGE 232 OF THE STANDARD PLANS BOOK DATED MAY 2006.

REVISED STANDARD PLAN RSP T56

2006 REVISED STANDARD PLAN RSP T56

DIST	COUNTY	ROUTE	POST MILES TOTAL PROJECT	SHEET NO.	TOTAL SHEETS
12	Ora	241	15.5/39.0	111	117

LICENSED LANDSCAPE ARCHITECT

August 15, 2008
PLANS Approval DATE

LICENSED LANDSCAPE ARCHITECT
Robert B. Schott 3625
Signature
11-04-08
Renewal Date
08-11-08
Date
STATE OF CALIFORNIA

The State of California or its officers or agents shall not be responsible for the accuracy or completeness of electronic copies of this plan sheet.

To accompany plans dated 10-18-10

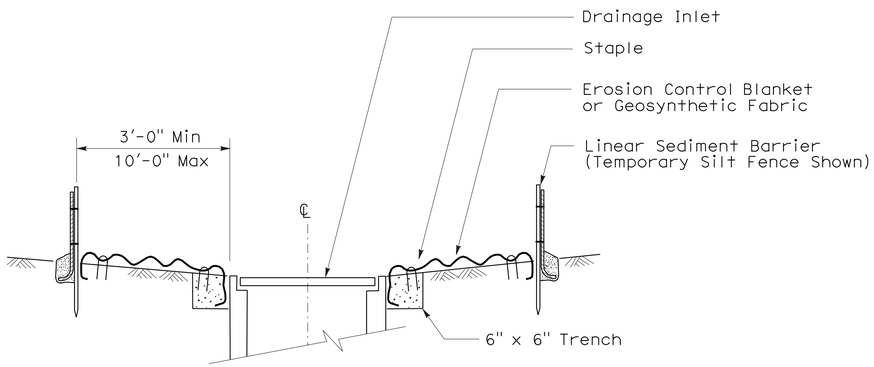

SECTION A-A

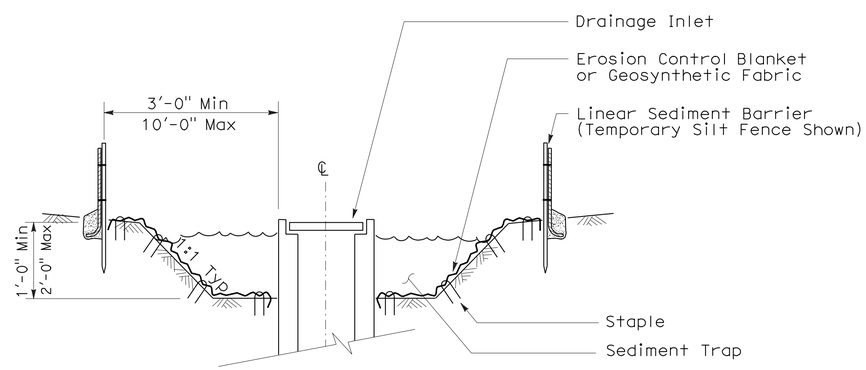

SECTION B-B

NOTES:

1. See Standard Plan T51 for Temporary Silt Fence.
2. Dimensions may vary to fit field conditions.

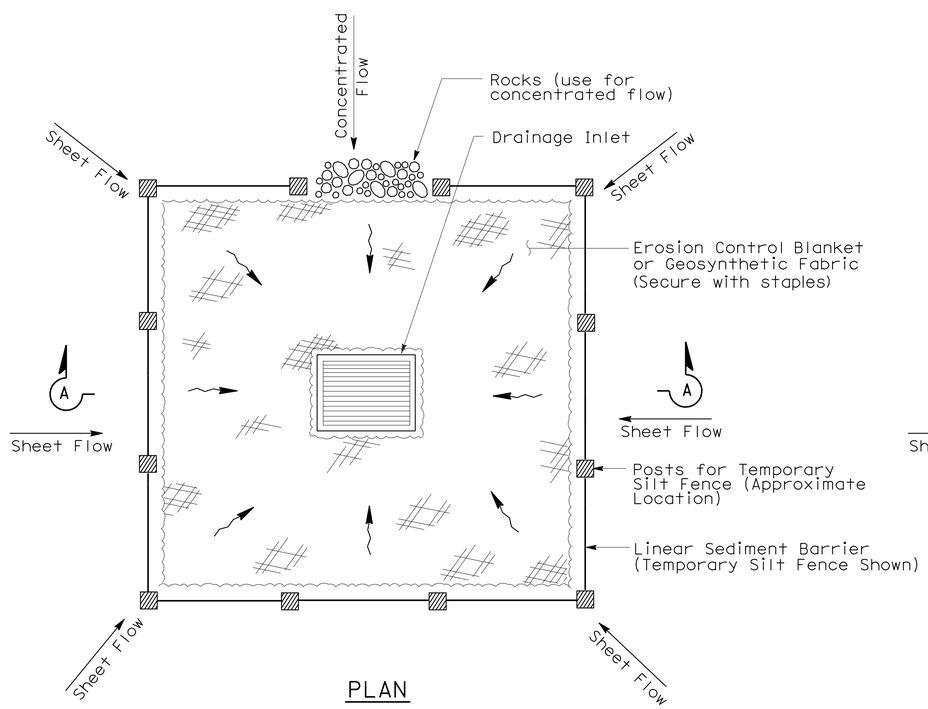

PLAN

TEMPORARY DRAINAGE INLET PROTECTION (TYPE 1)

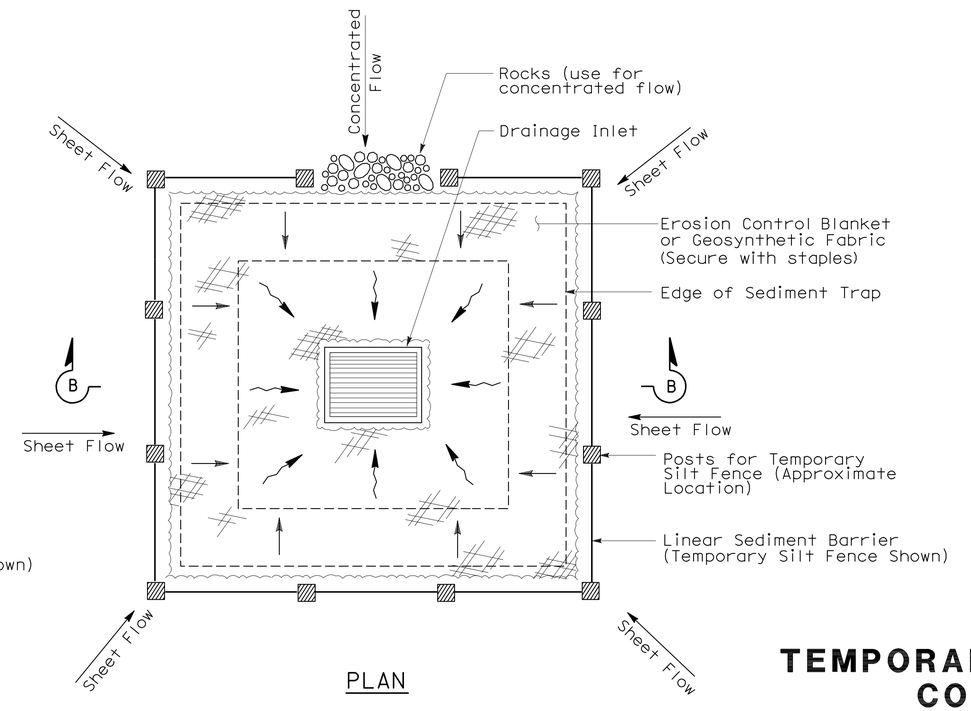

PLAN

TEMPORARY DRAINAGE INLET PROTECTION (TYPE 2) (EXCAVATED SEDIMENT TRAP)

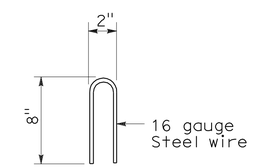

STAPLE DETAIL

STATE OF CALIFORNIA
DEPARTMENT OF TRANSPORTATION

TEMPORARY WATER POLLUTION CONTROL DETAILS (TEMPORARY DRAINAGE INLET PROTECTION)

NO SCALE

NSP T61 DATED AUGUST 15, 2008 SUPPLEMENTS THE STANDARD PLANS BOOK DATED MAY 2006.

NEW STANDARD PLAN NSP T61

2006 NEW STANDARD PLAN NSP T61

7-11-08

DIST	COUNTY	ROUTE	POST MILES TOTAL PROJECT	SHEET NO.	TOTAL SHEETS
12	Ora	241	15.5/39.0	112	117

LICENSED LANDSCAPE ARCHITECT

August 15, 2008
PLANS APPROVAL DATE

The State of California or its officers or agents shall not be responsible for the accuracy or completeness of electronic copies of this plan sheet.

LICENSED LANDSCAPE ARCHITECT — Robert B. Schott — Signature — 11-04-08 Renewal Date — 08-11-08 Date — STATE OF CALIFORNIA

To accompany plans dated 10-18-10

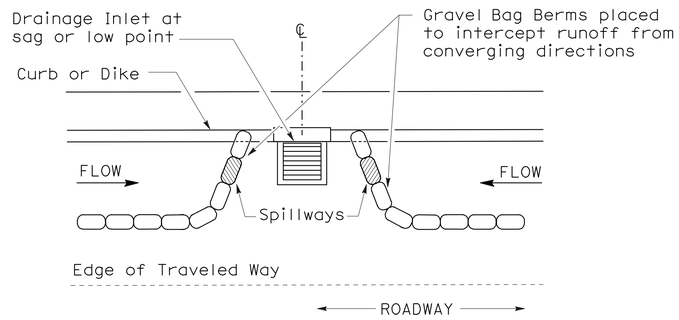

PLAN

CONFIGURATION FOR SAG POINT INLET (GRAVEL BAG BERM)

GRAVEL BAG BERM (TYPE 3A) SPACING TABLE

SLOPE OF ROADWAY (PERCENT)	1 to 3.9	4 to 5.9	6 to 7.9	8 to 10	10+
INTERVAL BETWEEN BERM	100′	75′	50′	25′	12′

For slope of less than 1%, install barriers only if erosion/sediment is prevalent

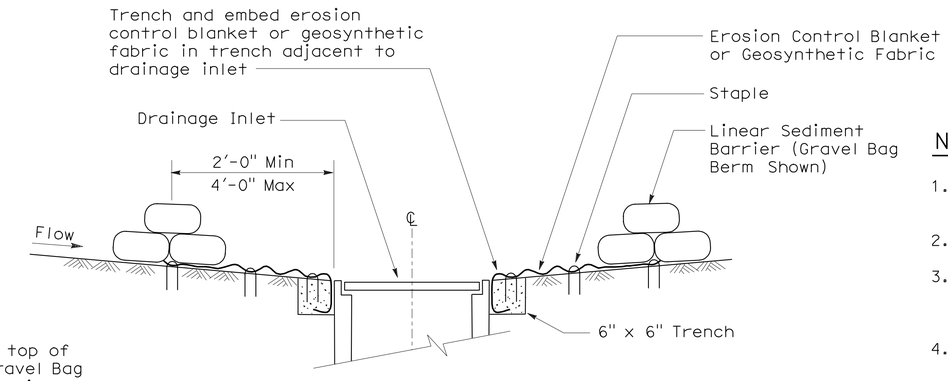

SECTION A-A

NOTES:

1. Place safety cones adjacent to drainage inlet protection.
2. Dimensions may vary to fit field conditions.
3. Install a minimum of 3 gravel bag berms upstream of each drainage inlet to be protected.
4. Position erosion control blanket or geosynthetic fabric at edge of concrete apron and secure in trench.
5. Erosion control blanket or geosynthetic fabric is not required if the area adjacent to the drainage inlet is vegetated or paved.

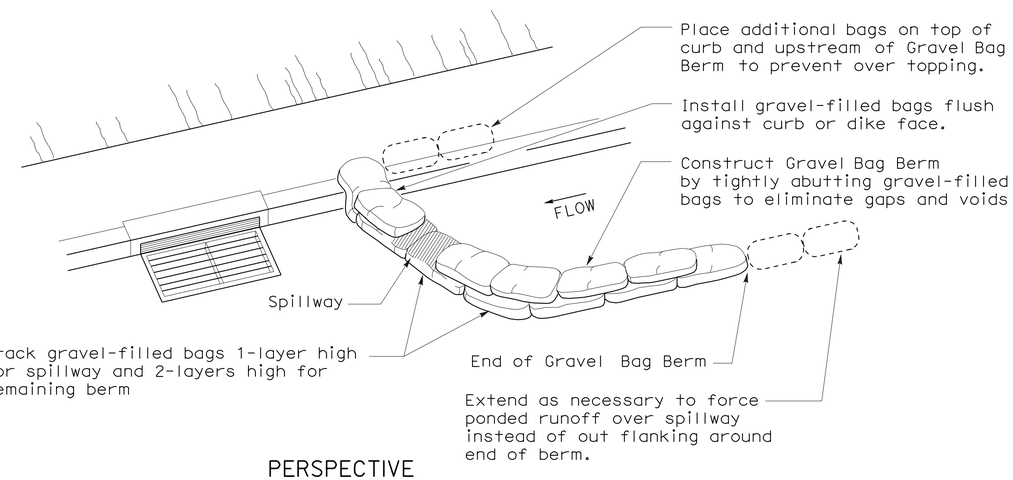

PERSPECTIVE

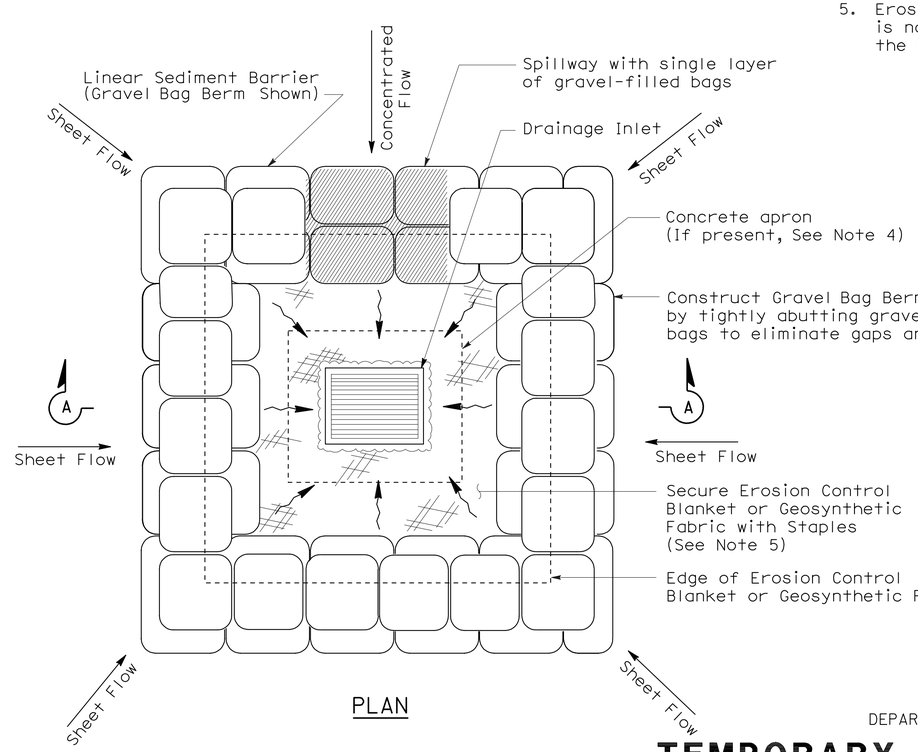

PLAN

TEMPORARY DRAINAGE INLET PROTECTION (TYPE 3B)

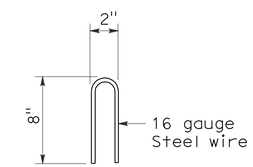

STAPLE DETAIL

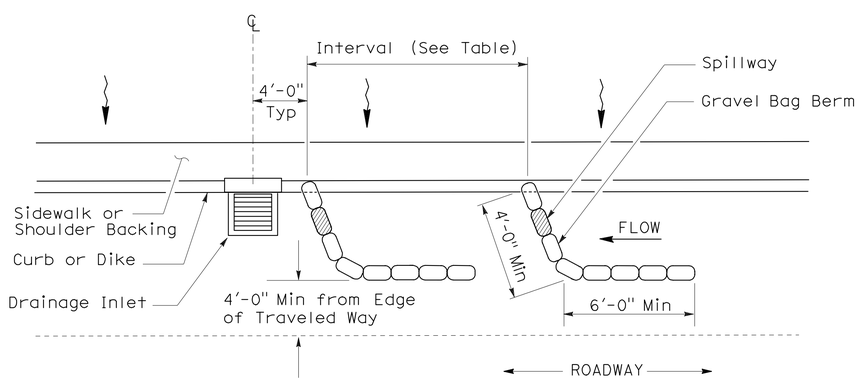

PLAN

TEMPORARY DRAINAGE INLET PROTECTION (TYPE 3A) (GRAVEL BAG BERM)

STATE OF CALIFORNIA
DEPARTMENT OF TRANSPORTATION

TEMPORARY WATER POLLUTION CONTROL DETAILS (TEMPORARY DRAINAGE INLET PROTECTION)

NO SCALE

NSP T62 DATED AUGUST 15, 2008 SUPPLEMENTS THE STANDARD PLANS BOOK DATED MAY 2006.

NEW STANDARD PLAN NSP T62

2006 NEW STANDARD PLAN NSP T62

7-11-08

DIST	COUNTY	ROUTE	POST MILES TOTAL PROJECT	SHEET NO.	TOTAL SHEETS
12	Ora	241	15.5/39.0	113	117

Robert B Schott
LICENSED LANDSCAPE ARCHITECT

August 15, 2008
PLANS APPROVAL DATE

LICENSED LANDSCAPE ARCHITECT Robert B. Schott 3025 Signature 11-04-08 Renewal Date 08-11-08 Date STATE OF CALIFORNIA

The State of California or its officers or agents shall not be responsible for the accuracy or completeness of electronic copies of this plan sheet.

To accompany plans dated 10-18-10

FLEXIBLE SEDIMENT BARRIER SPACING TABLE

SLOPE OF ROADWAY (PERCENT)	0 to 0.9	1 to 1.9	2 to 2.9	3 to 4	5+
INTERVAL BETWEEN BARRIERS	50′	35′	30′	25′	20′
ANGLE FROM FACE OF CURB	70°	70°	70°	45°	45°
SUGGESTED BARRIER LENGTH	6′	6′	6′	6′	6′

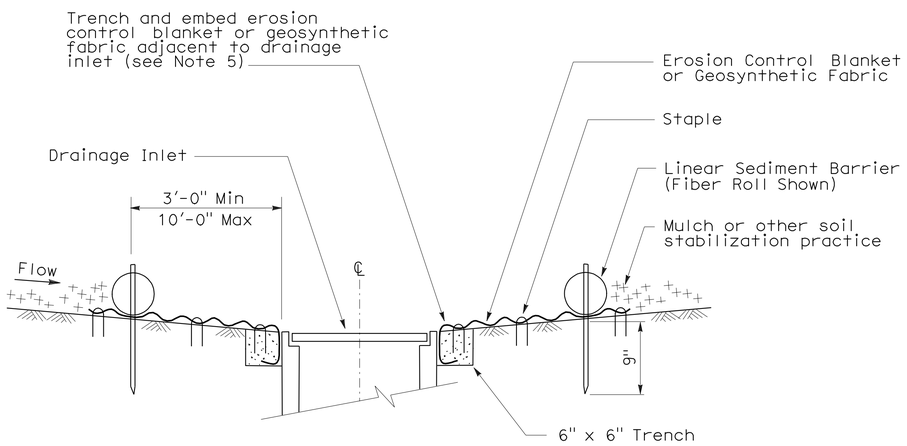

SECTION A-A

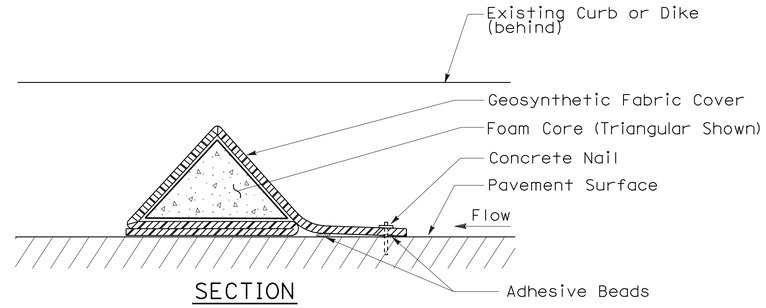

SECTION

FLEXIBLE SEDIMENT BARRIER DETAIL (FOAM BARRIER SHOWN)

NOTES:

1. See Standard Plan T51 for Temporary Silt Fence.
2. Dimensions may vary to fit field conditions.
3. Install a minimum of 3 flexible sediment barriers upstream of each drainage inlet to be protected.
4. Position erosion control blanket or geosynthetic fabric at edge of concrete apron and secure in trench.
5. Erosion control blanket or geosynthetic fabric is not required if the area adjacent to the drainage inlet is vegetated.

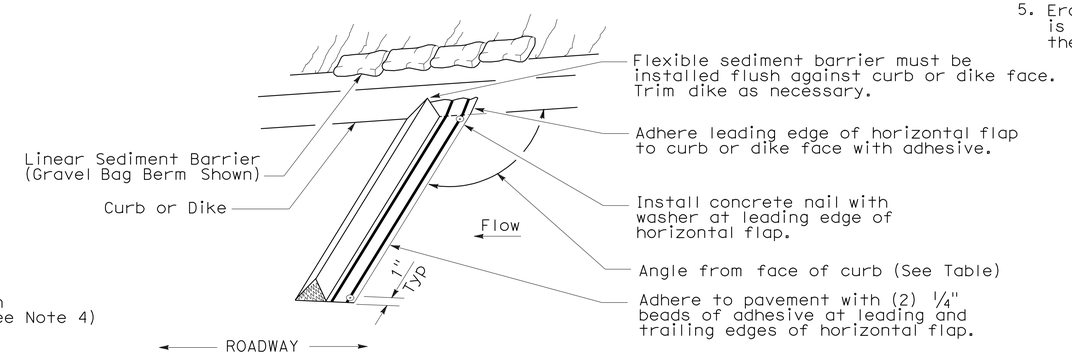

PERSPECTIVE

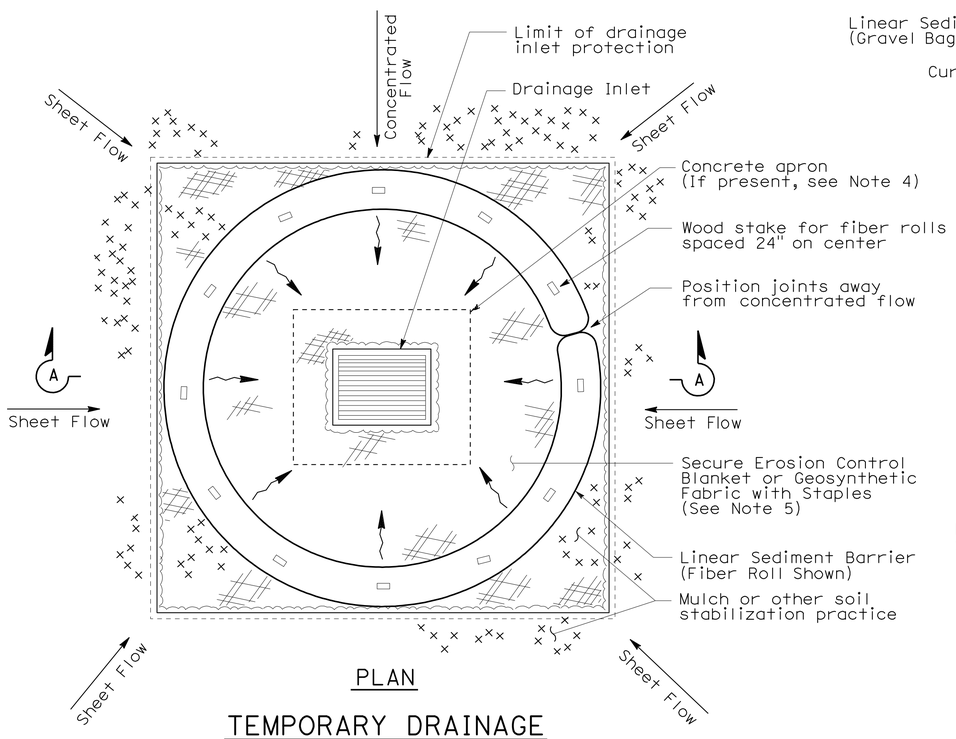

PLAN

TEMPORARY DRAINAGE INLET PROTECTION (TYPE 4A)

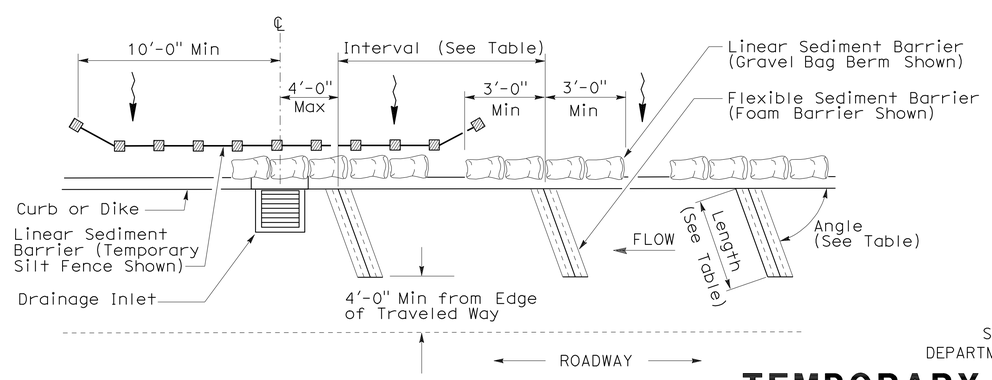

PLAN

TEMPORARY DRAINAGE INLET PROTECTION (TYPE 4B) FLEXIBLE SEDIMENT BARRIER

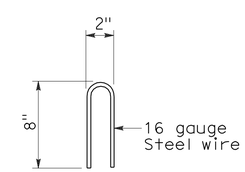

STAPLE DETAIL

STATE OF CALIFORNIA
DEPARTMENT OF TRANSPORTATION

TEMPORARY WATER POLLUTION CONTROL DETAILS (TEMPORARY DRAINAGE INLET PROTECTION)

NO SCALE

NSP T63 DATED AUGUST 15, 2008 SUPPLEMENTS THE STANDARD PLANS BOOK DATED MAY 2006.

NEW STANDARD PLAN NSP T63

2006 NEW STANDARD PLAN NSP T63

7-11-08

DIST	COUNTY	ROUTE	POST MILES TOTAL PROJECT	SHEET NO.	TOTAL SHEETS
12	Ora	241	15.5/39.0	114	117

LICENSED LANDSCAPE ARCHITECT

August 15, 2008
PLANS APPROVAL DATE

LICENSED LANDSCAPE ARCHITECT
Robert B. Schott 3625
Signature
11-04-08
Renewal Date
08-11-08
Date
STATE OF CALIFORNIA

The State of California or its officers or agents shall not be responsible for the accuracy or completeness of electronic copies of this plan sheet.

To accompany plans dated 10-18-10

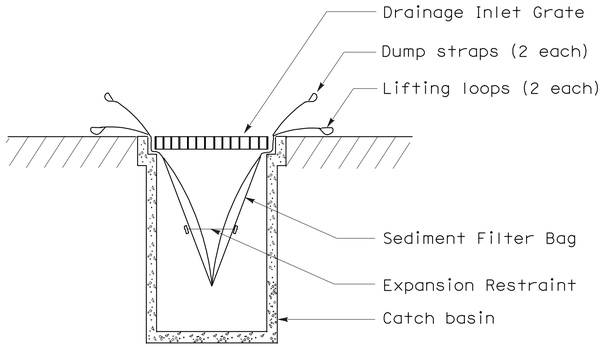

SECTION B-B

SEDIMENT FILTER BAG DETAIL

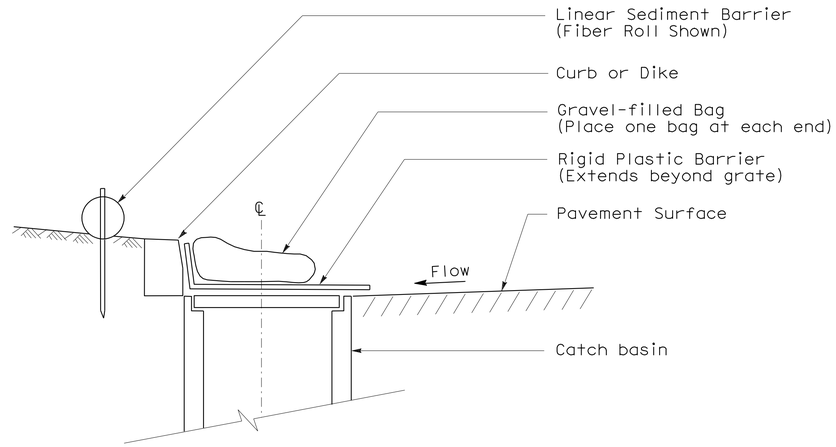

SECTION

TEMPORARY DRAINAGE INLET PROTECTION (TYPE 6A) (CATCH BASIN WITH GRATE)

NOTES:

1. See Standard Plan T51 for Temporary Silt Fence.
2. Dimensions may vary to fit field conditions.

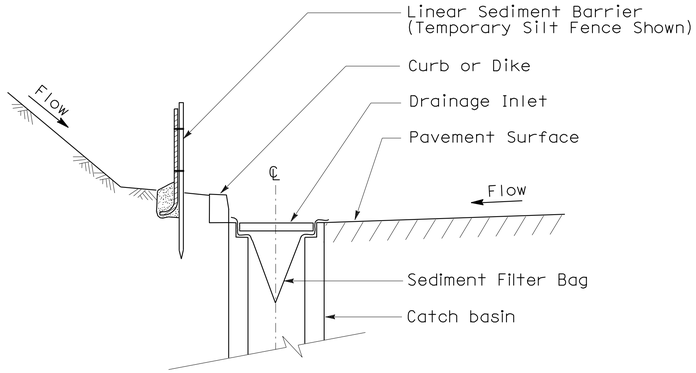

SECTION A-A

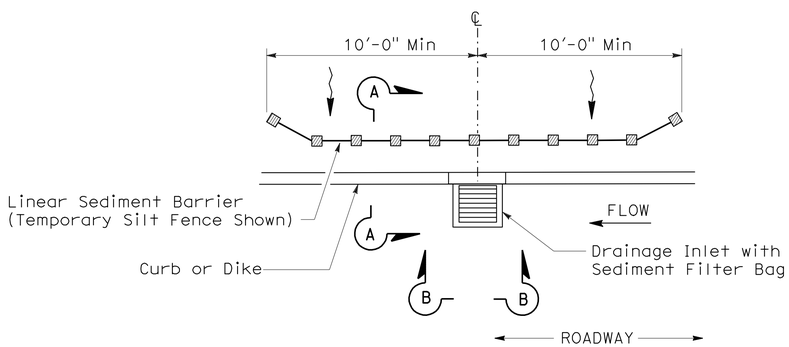

PLAN

TEMPORARY DRAINAGE INLET PROTECTION (TYPE 5) (SEDIMENT FILTER BAG)

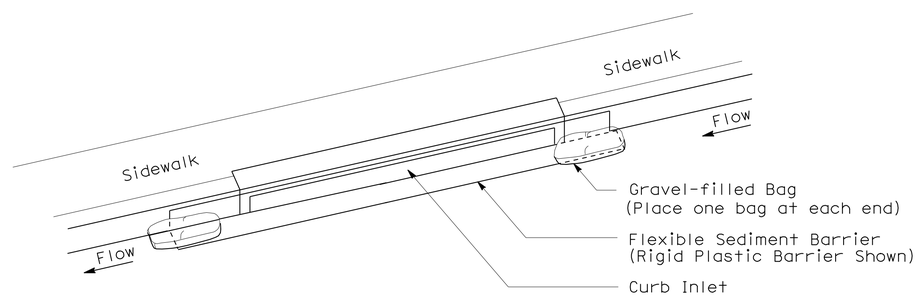

PERSPECTIVE

TEMPORARY DRAINAGE INLET PROTECTION (TYPE 6B) (CURB INLET WITHOUT GRATE)

STATE OF CALIFORNIA
DEPARTMENT OF TRANSPORTATION

TEMPORARY WATER POLLUTION CONTROL DETAILS (TEMPORARY DRAINAGE INLET PROTECTION)

NO SCALE

NSP T64 DATED AUGUST 15, 2008 SUPPLEMENTS
THE STANDARD PLANS BOOK DATED MAY 2006.

NEW STANDARD PLAN NSP T64

2006 NEW STANDARD PLAN NSP T64

7-11-08

DIST	COUNTY	ROUTE	POST MILES TOTAL PROJECT	SHEET NO.	TOTAL SHEETS
12	Ora	241	15.5/39.0	115	117

REGISTERED ELECTRICAL ENGINEER

October 5, 2007
PLANS APPROVAL DATE

REGISTERED PROFESSIONAL ENGINEER
Jeffery G. McRae
No. E14512
Exp. 6-30-08
ELECTRICAL
STATE OF CALIFORNIA

The State of California or its officers or agents shall not be responsible for the accuracy or completeness of electronic copies of this plan sheet.

To accompany plans dated 10-18-10

ELECTROLIERS

STANDARD TYPES
15, 15D
15 STRUCTURE
21, 21D STRUCTURE
30
31
32
35
36-20A

High mast light pole

Double Arm lighting standard

Existing electrolier

Electrolier foundation (Future installation)

NOTES:

1. Luminaires shall be 310 W HPS when installed on Type 21, 21D, 30, 31, 32, 35 and 36-20A Standards, unless otherwise specified. Luminaires shall be 200 W HPS when installed on other type standards or poles, unless otherwise specified.
2. Luminaires shall be the cutoff type, ANSI Type Ⅲ medium cutoff lighting distribution, unless otherwise specified.
3. Variations noted adjacent to symbol on project plans.

Electrolier (see project notes or project plans)

Luminaire on wood pole

STANDARD NOTES:

- AB — Abandon. If applied to conduit, remove conductors.
- BC — Install pull box in existing conduit run.
- BP — Pedestrian barricade, type as indicated on plan.
- CB — Install conduit into existing pull box.
- CC — Connect new and existing conduit. Remove existing conductors and install conductors as indicated.
- CF — Conduit to remain for future use. Remove conductors. Install pull wire or rope.
- DH — Detector handhole.
- FA — Foundation to be abandoned.
- IS — Install sign on signal mast arm.
- NS — No slip base on standard.
- PEC — Photoelectric control.
- PEU — Photoelectric unit.
- RC — Equipment or material to be removed and become the property of the Contractor.
- RE — Remove electrolier, fuses and ballast. Tape ends of conductors.
- RL — Relocate equipment.
- RR — Remove and reuse equipment.
- RS — Remove and salvage equipment.
- SC — Splice new to existing conductors.
- SD — Service disconnect.
- SF — Standard to remain for future use. Remove luminaire, pole conductors, fuses and ballast.
- TSP — Telephone service point.

ABBREVIATIONS AND EQUIPMENT DESIGNATIONS

PROPOSED	EXISTING	
BBS	bbs	Battery backup system
BC	bc	Bolt circle
C	C	Conduit
CCTV	cctv	Closed circuit television
CKT	ckt	Circuit
CMS	cms	Changeable message sign
DLC	dlc	Loop detector lead-in cable
EMS	ems	Extinguishable message sign
EVC	evc	Emergency vehicle cable
EVD	evd	Emergency vehicle detector
FB	fb	Flashing beacon
FBCA	fbca	Flashing beacon control assembly
FBS	fbs	Flashing beacon with slip base
FO	fo	Fiber optic
G	G	Ground (Equipment Grounding Conductor)
GFCI	GFCI	Ground fault circuit interrupt
HAR	har	Highway advisory radio
HEX	hex	Hexagonal
HPS	hps	High pressure sodium
IISNS	iisns	Internally illuminated street name sign
ISL	isl	Induction sign lighting
LED	led	Light emitting diode
LMA	lma	Luminaire mast arm
LPS	lps	Low pressure sodium
LTG	ltg	Lighting
LUM	lum	Luminaire
MAT	mat	Mast arm mounting vehicle signal faces, top attachment
MAS	mas	Mast arm mounting vehicle signal faces, side attachment
MAS-4A	mas-4A	Mast arm mounting vehicle signal faces, side attachment - 4 signal section
MAS-4B	mas-4B	
MAS-4C	mas-4C	
MAS-5A	mas-5A	Mast arm mounting vehicle signal faces, side attachment - 5 signal section
MAS-5B	mas-5B	
MC	mc	Mercury contactor
M/M	m/m	Multiple to multiple transformer
MT	mt	Conduit with pull wire or rope only
MTG	mtg	Mounting
	mv	Mercury vapor lighting fixture
N	N	Neutral (Grounded Conductor)
NC	NC	Normally closed
NO	NO	Normally open
PB	pb	Pull box
PEC	pec	Photoelectric control (Type Ⅰ, Ⅱ, Ⅲ, Ⅳ or Ⅴ as shown)
PED	ped	Pedestrian
PEU	peu	Photoelectric unit
PPB	ppb	Pedestrian push button
RL		Relocated equipment
RM	rm	Ramp metering
SB	sb	Slip base
SIC	sic	Signal interconnect cable
SIG	sig	Signal
SMA	sma	Signal mast arm
SNS	sns	Street name sign
SP	sp	Service point
TDC	tdc	Telephone demarcation cabinet
TMS	tms	Traffic monitoring station
TOS	tos	Traffic Operations System
VEH	veh	Vehicle
XFMR	xfmr	Transformer
COMM	comm	Communication
RWIS	rwis	Roadway weather information system

SOFFIT AND WALL MOUNTED LUMINAIRES

Pendant, 70 W HPS unless otherwise specified.

Flush, 70 W HPS unless otherwise specified.

Wall surface, 70 W HPS unless otherwise specified.

Existing soffit or wall luminaire to remain unmodified.

Existing soffit or wall luminaire to be modified as specified.

NOTE:

Arrow indicates "street side" of luminaire.

STATE OF CALIFORNIA
DEPARTMENT OF TRANSPORTATION

ELECTRICAL SYSTEMS (SYMBOLS AND ABBREVIATIONS)

NO SCALE

RSP ES-1A DATED OCTOBER 5, 2007 SUPERSEDES STANDARD PLAN ES-1A DATED MAY 1, 2006 - PAGE 400 OF THE STANDARD PLANS BOOK DATED MAY 2006.

REVISED STANDARD PLAN RSP ES-1A

2006 REVISED STANDARD PLAN RSP ES-1A

DIST	COUNTY	ROUTE	POST MILES TOTAL PROJECT	SHEET NO.	TOTAL SHEETS
12	Ora	241	15.5/39.0	116	117

REGISTERED ELECTRICAL ENGINEER

October 5, 2007
PLANS APPROVAL DATE

REGISTERED PROFESSIONAL ENGINEER
Jeffery G. McRae
No. E14512
Exp. 6-30-08
ELECTRICAL
STATE OF CALIFORNIA

The State of California or its officers or agents shall not be responsible for the accuracy or completeness of electronic copies of this plan sheet.

To accompany plans dated 10-18-10

CONDUIT

PROPOSED	EXISTING	
		Lighting Conduit, unless otherwise indicated or noted
		Traffic signal conduit
C	c	Communication conduit
T	t	Telephone conduit
F	f	Fire alarm conduit
FO	fo	Fiber optic conduit
		Conduit termination (RSP ES-9A C)
R	r	Conduit riser in/on structure or service pole

SERVICE EQUIPMENT

PROPOSED	EXISTING	
OH	oh	Overhead lines
U	U	Wood pole "U" indicates utility owned
		Pole guy with anchor
		Utility transformer - ground mounted
III		Service equipment enclosure type
		Service equipment enclosure door indicates front of enclosure
T	t	Telephone demarcation cabinet

POLE-MOUNTED SERVICE DESIGNATION

Type of installation

TYPE H SERVICE - 28'-10" ← Pole height above grade

ILLUMINATED OVERHEAD SIGN

PROPOSED	EXISTING	
		Overhead sign - Single post
		Overhead sign - Two post
		Overhead sign - Mounted on structure
		Overhead sign with electrolier

SIGNAL EQUIPMENT

PROPOSED	EXISTING	
		Pedestrian signal face
		Pedestrian push button post
		Pedestrian barricade
		Vehicle signal face (with backplate, 3-Section: red, yellow and green)
		Vehicle signal face with angle visors
PV	PV	Modifications of basic symbols: "L" indicates all non-arrow sections louvered "LG" indicates louvered green section only "PV" indicates 12" programmed visibility sections "8" indicates all 8" sections (only when specified)
		Type 15TS and Vehicle signal face
		Vehicle signal face with red, yellow and green left arrow sections
		Vehicle signal face with red and yellow sections and up green arrow
		Vehicle signal face (5 Section) with red, yellow and green sections and yellow and green right arrows
		Type 1 Standard and attached vehicle signal faces
		Standard with signal mast arm only and attached vehicle signal faces and internally illuminated street name sign
		Type 33 Standard, Left-turn vehicle signal face and sign
		Standard with luminaire and signal mast arms and attached vehicle signal faces
		Cantilever flashing beacon Type 9 Frame, with a sign unless otherwise specified or indicated
		Type 15-FBS Standard with two vehicle signal face sections with lens, backplate and visor with a sign
R	Y	Flashing beacon. One vehicle signal face section with lens, backplate and visor. "R" indicates red indication, "Y" indicates yellow indication
		Controller assembly. Door indicates front of cabinet

SIGNAL EQUIPMENT Cont

PROPOSED	EXISTING	
		Guard post
		Type 1 Standard with "Meter On" sign
		Emergency Vehicle detector

NOTES:

1. All signal sections shall be 12" unless shown otherwise.
2. Signal heads shall be provided with backplates unless shown otherwise.
3. Signal indication shall be LED.

STATE OF CALIFORNIA
DEPARTMENT OF TRANSPORTATION

ELECTRICAL SYSTEMS (SYMBOLS AND ABBREVIATIONS)

NO SCALE

RSP ES-1B DATED OCTOBER 5, 2007 SUPERCEDES STANDARD PLAN ES-1B DATED MAY 1, 2006 - PAGE 401 OF THE STANDARD PLANS BOOK DATED MAY 2006.

REVISED STANDARD PLAN RSP ES-1B

2006 REVISED STANDARD PLAN RSP ES-1B

DIST	COUNTY	ROUTE	POST MILES TOTAL PROJECT	SHEET NO.	TOTAL SHEETS
12	Ora	241	15.5/39.0	117	117

REGISTERED ELECTRICAL ENGINEER

October 5, 2007
PLANS APPROVAL DATE

REGISTERED PROFESSIONAL ENGINEER Jeffery G. McRae No. E14512 Exp. 6-30-08 ELECTRICAL STATE OF CALIFORNIA

The State of California or its officers or agents shall not be responsible for the accuracy or completeness of electronic copies of this plan sheet.

To accompany plans dated 10-18-10

EQUIPMENT IDENTIFICATION

ILLUMINATED SIGN IDENTIFICATION NUMBER:

Sign No. 12345 — Sign number - Place on post or structure

10 ISL SCI 1.0

- 1.0 — Transformer rating (kVA)
- SCI — Lighting control type
- ISL — Number and type of fixtures

Do NOT place on standard or structure

ELECTROLIER OR EQUIPMENT IDENTIFICATION NUMBER:

12345 - 15'-0"

- 15'-0" — Mast arm length, if shown. Do not place on standard or structure.
- 12345 — Equipment number - Place on standard or structure. Existing equipment numbers are shown in parenthesis

CONDUIT AND CONDUCTOR IDENTIFICATION:

1½"C, 2#10, 15#14, 2 DLC

- 2#10, 15#14, 2 DLC — Number and size of conductors and cables
- 1½"C — Size of conduit in inches

Ø1, Ø2, Ø2P, etc.	Traffic phase identification for signal faces, detectors and phase diagrams
1 2 3	Project note numbers
A B C	Equipment description, installation or item numbers
1 2 3	Conduit run numbers

SIGNAL AND LIGHTING STANDARD (TYPICAL DESIGNATION):

19A - 3 - 100

- 100 — Wind velocity = 100 mph
- 3 — Case 3 arm loading
- 19A — Standard type
- Standard Plan sheet number
- Detail number or letter

MISCELLANEOUS EQUIPMENT

PROPOSED	EXISTING	
CMS	cms	Changeable message sign
		Closed circuit television camera
		Highway advisory radio pole and antenna
EMS	ems	Extinguishable message sign
M V	m v	Detection device M = Microwave sensor V = Video image sensor

WIRING DIAGRAM LEGEND

P	Pole
CB	Circuit breaker
A	Ampere
V	Volt
M	Metered
UM	Unmetered
NB	Neutral bus
GB	Ground bus
G	Equipment grounding conductor
N	Grounded conductor (Neutral)

- External conductor
- Conductor or bus
- Tie point
- Contactor coil
- Contactor, Contact NO
- Terminal blocks
- Contactor, Contact NC
- Enclosure bond
- Grounding electrode
- Circuit breaker
- Receptacle

PULL BOXES

PROPOSED EXISTING

Pull box-No. 5 unless otherwise indicated or noted.

3 — 9A(21)

Pull box-Additional designations or descriptions

3	= No. 3½ pull box
5	= No. 5 pull box
6	= No. 6 pull box
7	= No. 7 (Ceiling pull box)
8	= No. 8 (Pendant soffit pull box)
9	= No. 9 pull box
9A	= No. 9A pull box

(C)	= Communications pull box
(E)	= Pull box with extension
(S)	= Sprinkler control pull box
(21)	= Anchor bolts and conduit for future installation of Type 21 Standard
(T)	= Traffic pull box

VEHICLE DETECTORS

5 J 9 U

- U = Upper
- L = Lower
- Slot number in input file
- Input file (I or J)
- Phase

PROPOSED EXISTING

	Type A detector loop. Outline of sawcut shown.
	Type B detector loop. Outline of sawcut shown.
	Type C detector loop. Outline of sawcut shown.
	Type D detector loop. Outline of sawcut shown.
	Type E detector loop. Outline of sawcut shown.
	Type Q detector loop. Outline of sawcut shown.
	Magnetic detector
DH / dh	Detector handhole
	Microwave or video detection zone

STATE OF CALIFORNIA
DEPARTMENT OF TRANSPORTATION

ELECTRICAL SYSTEMS (SYMBOLS AND ABBREVIATIONS)

NO SCALE

RSP ES-1C DATED OCTOBER 5, 2007 SUPERCEDES STANDARD PLAN ES-1C DATED MAY 1, 2006 - PAGE 402 OF THE STANDARD PLANS BOOK DATED MAY 2006.

REVISED STANDARD PLAN RSP ES-1C

2006 REVISED STANDARD PLAN RSP ES-1C

7-10-07