Dist	COUNTY	ROUTE	POST MILES TOTAL PROJECT	SHEET No.	TOTAL SHEETS
12	Ora	5	1.3/1.7	1	127

INDEX OF PLANS

SHEET No.	DESCRIPTION
1	TITLE AND LOCATION MAP
2-9	TYPICAL CROSS SECTIONS
10-12	LAYOUTS
13-15	CONSTRUCTION DETAILS
16-18	UTILITY PLANS
19	CONSTRUCTION AREA SIGNS
20-24	STAGE CONSTRUCTION INDEX, TRAFFIC HANDLING, TRAFFIC HANDLING QUANTITIES
25	DETOUR SIGN PLAN
26-29	PAVEMENT DELINEATION PLANS
30-31	SUMMARY OF QUANTITIES
32-36	DRAINAGE PLAN, DRAINAGE PROFILE, DRAINAGE QUANTITIES
37-39	WATER POLLUTION CONTROL
40	PLANT LIST
41-43	PLANT REMOVAL
44-46	PLANTING PLANS
47-49	IRRIGATION REMOVAL PLANS
50-52	IRRIGATION PLANS
53	LANDSCAPE DETAILS
54-62	SOUNDWALL PLANS
63-71	LOG OF TEST BORING
72-74	ELECTRICAL PLANS
75-104	REVISED AND NEW STANDARD PLANS

STRUCTURE PLANS

105-127	EL CAMINO REAL UC (SOUNDWALL)

THE STANDARD PLANS LIST APPLICABLE TO THIS CONTRACT IS INCLUDED IN THE NOTICE TO BIDDERS AND SPECIAL PROVISIONS BOOK.

STATE OF CALIFORNIA

DEPARTMENT OF TRANSPORTATION

PROJECT PLANS FOR CONSTRUCTION ON

STATE HIGHWAY

IN ORANGE COUNTY
IN SAN CLEMENTE
FROM 0.2 MILE NORTH OF AVENIDA MENDOCINO OVERCROSSING
TO 0.6 MILE SOUTH OF AVENIDA PRESIDIO UNDERCROSSING

TO BE SUPPLEMENTED BY STANDARD PLANS DATED MAY 2006

LOCATION MAP

BEGIN CONSTRUCTION
Sta 81+78 PM 1.3

END CONSTRUCTION
Sta 102+40 PM 1.7

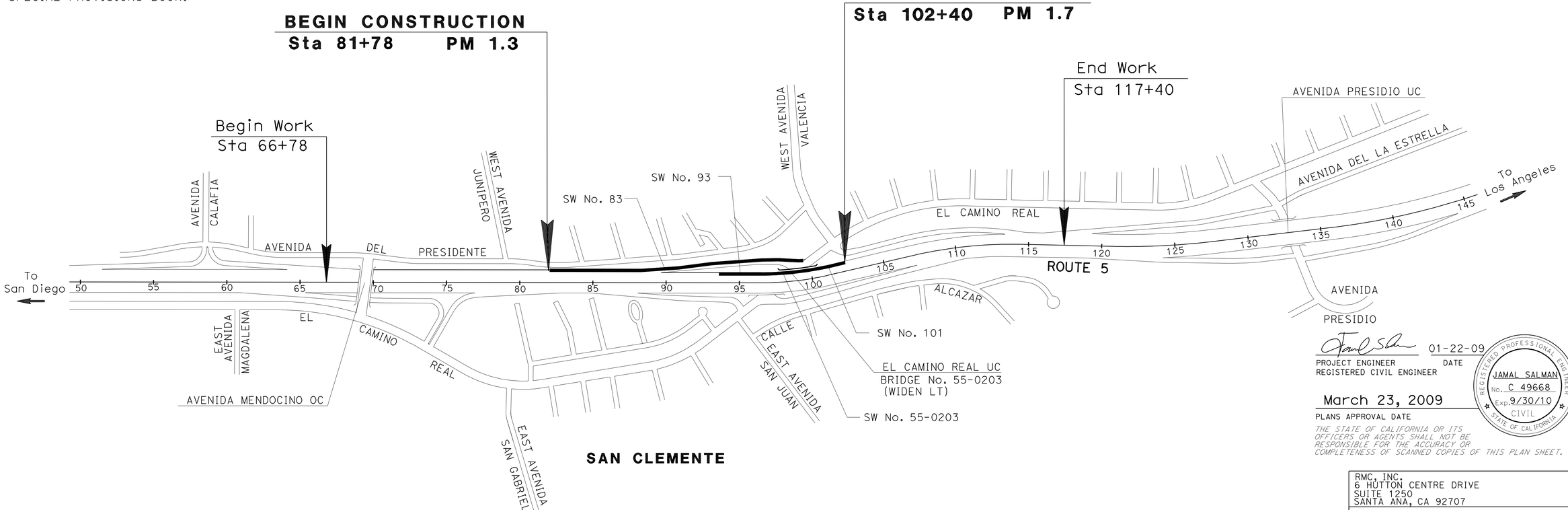

NO SCALE

THE CONTRACTOR SHALL POSSESS THE CLASS (OR CLASSES) OF LICENSE AS SPECIFIED IN THE "NOTICE TO BIDDERS."

01-22-09
PROJECT ENGINEER DATE
REGISTERED CIVIL ENGINEER

REGISTERED PROFESSIONAL ENGINEER
JAMAL SALMAN
No. C 49668
Exp. 9/30/10
CIVIL
STATE OF CALIFORNIA

March 23, 2009
PLANS APPROVAL DATE

THE STATE OF CALIFORNIA OR ITS OFFICERS OR AGENTS SHALL NOT BE RESPONSIBLE FOR THE ACCURACY OR COMPLETENESS OF SCANNED COPIES OF THIS PLAN SHEET.

RMC, INC.
6 HUTTON CENTRE DRIVE
SUITE 1250
SANTA ANA, CA 92707

ORANGE COUNTY TRANSPORTATION AUTHORITY
550 SOUTH MAIN STREET
ORANGE, CA 92863

CONTRACT No.	12-0G9404
PROJECT ID	1200000159

LAST REVISION 01-20-09
DATE PLOTTED => 07-JUL-2010
TIME PLOTTED => 14:01

CONSULTANT DESIGN ENGINEER: JOSEPH W. SAWTELLE
REGISTRATION No. 048436
LICENSE Exp DATE 6/30/10
CALTRANS DESIGN OVERSIGHT APPROVAL: KAMRAN MAZHAR
DATE SIGNED 01-22-09

APPROVED AS TO IMPACT ON STATE FACILITIES AND CONFORMANCE WITH APPLICABLE STATE STANDARDS AND PRACTICES AND THAT TECHNICAL OVERSIGHT WAS PERFORMED.

Dist	COUNTY	ROUTE	POST MILES TOTAL PROJECT	SHEET No.	TOTAL SHEETS
12	Ora	5	1.3/1.7	2	127

Joseph W. Sawtelle 01-22-09
REGISTERED CIVIL ENGINEER DATE

3-23-09
PLANS APPROVAL DATE

REGISTERED PROFESSIONAL ENGINEER — JOSEPH W. SAWTELLE — No. C 60110 — Exp 6/30/10 — CIVIL — STATE OF CALIFORNIA

THE STATE OF CALIFORNIA OR ITS OFFICERS OR AGENTS SHALL NOT BE RESPONSIBLE FOR THE ACCURACY OR COMPLETENESS OF SCANNED COPIES OF THIS PLAN SHEET.

ORANGE COUNTY
TRANSPORTATION AUTHORITY
550 SOUTH MAIN STREET
ORANGE, CA 92863

RMC, INC.
6 HUTTON CENTRE DRIVE
SUITE 1250
SANTA ANA, CA 92707

NOTES:

1. DIMENSIONS OF THE PAVEMENT STRUCTURES (STRUCTURAL SECTIONS) ARE SUBJECT TO TOLERANCES SPECIFIED IN THE STANDARD SPECIFICATIONS.
2. SUPERELEVATIONS AS SHOWN OR AS DIRECTED BY THE ENGINEER.
3. FOR LOCATION AND TYPE OF CURBS AND DIKES, SEE CONSTRUCTION DETAILS.
4. SEE STRUCTURE PLANS FOR STRUCTURE DETAILS.
5. SEE SOUNDWALL PLANS FOR SOUNDWALL AND RETAINING WALL DETAILS.
6. SEE SHEET X-8 FOR GRADING BEHIND SOUNDWALL DETAILS.
7. SEE SHEET X-2 FOR ADDITIONAL COLD PLANE DETAILS.
8. APPLY TACK COAT TO ALL SURFACES PRIOR TO PLACING NEW PAVEMENTS.

ABBREVIATIONS

HMA - HOT MIXED ASPHALT

STRUCTURAL SECTION TYPES

[1] 0.90′ HMA (TYPE A)
1.50′ CLASS 2 AB

[2] 0.70′ HMA (TYPE A)
1.30′ CLASS 2 AB

[3] COLD PLANE AC (0.20′ Max)
0.20′ HMA (TYPE A)

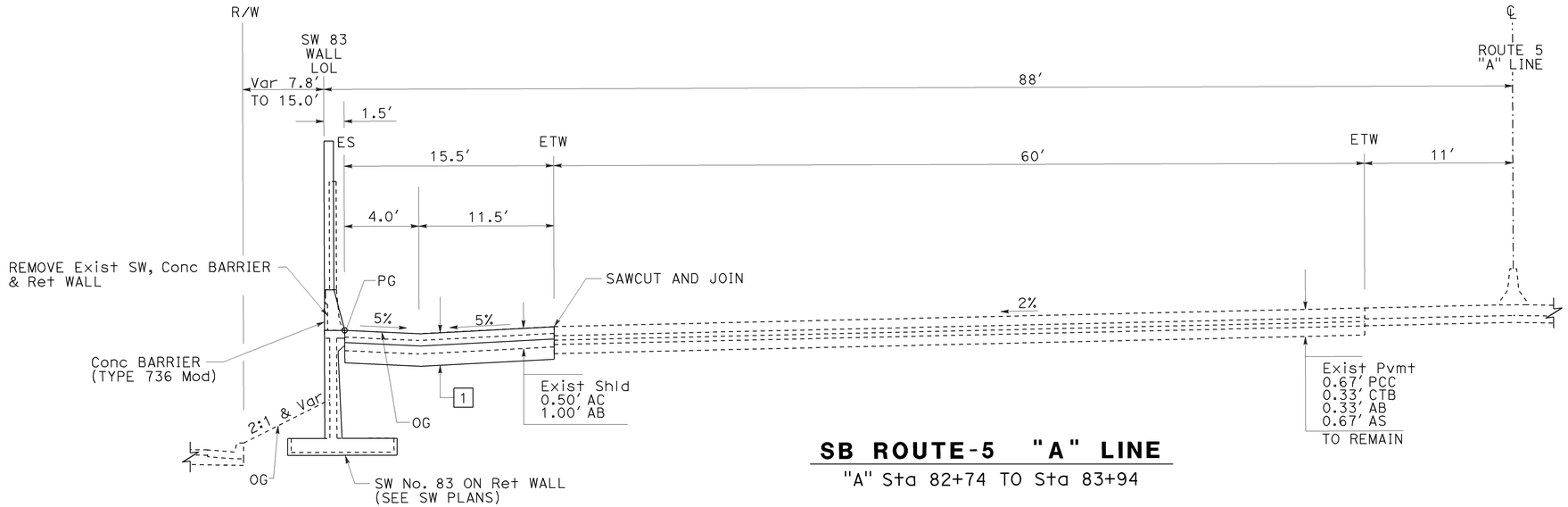

SB ROUTE-5 "A" LINE
"A" Sta 82+74 TO Sta 83+94

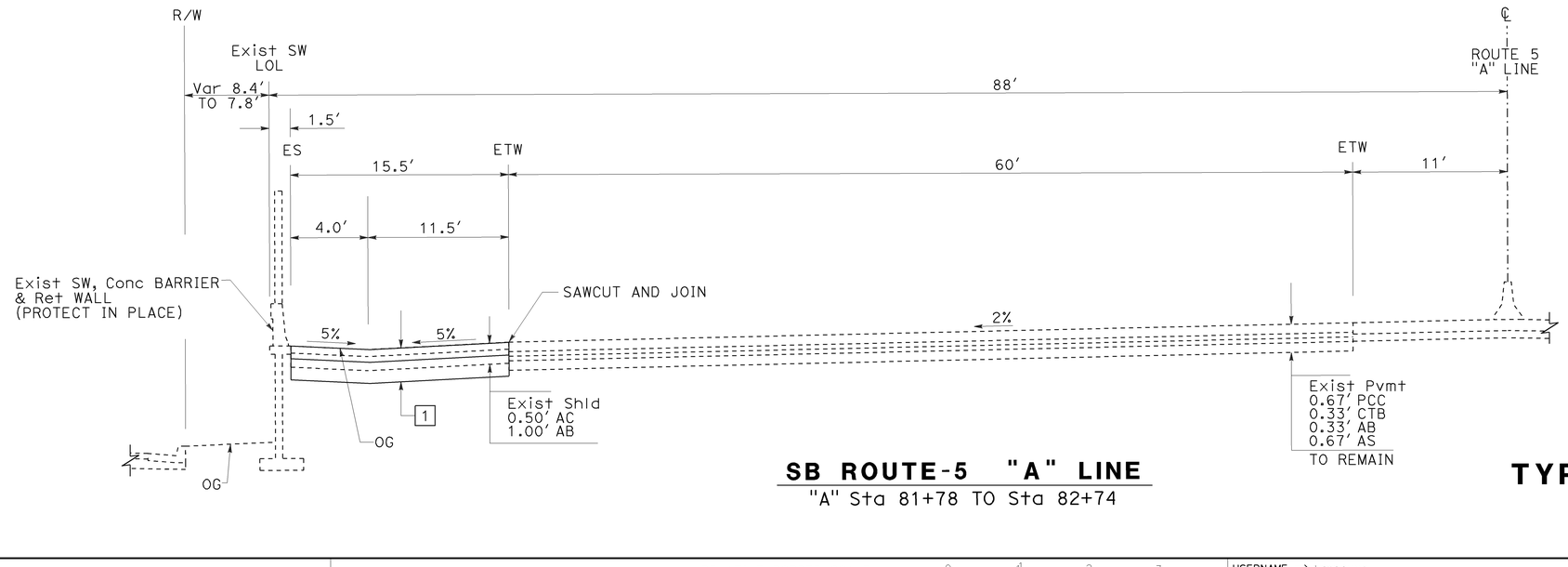

SB ROUTE-5 "A" LINE
"A" Sta 81+78 TO Sta 82+74

TYPICAL CROSS SECTIONS

NO SCALE

X-1

REVISED BY | DATE REVISED
C. SOSA | J. SAWTELLE
CALCULATED-DESIGNED BY | CHECKED BY
CONSULTANT FUNCTIONAL SUPERVISOR: JAMAL SALMAN
STATE OF CALIFORNIA - DEPARTMENT OF TRANSPORTATION
DESIGN F
Caltrans

LAST REVISION | DATE PLOTTED => 23-MAR-2009
01-20-09 | TIME PLOTTED => 13:52

BORDER LAST REVISED 4/11/2008
RELATIVE BORDER SCALE IS IN INCHES 0 1 2 3
USERNAME => trmnguye
DGN FILE => c0g940ca001.dgn
CU 12231
EA 0G9401

Dist	COUNTY	ROUTE	POST MILES TOTAL PROJECT	SHEET No.	TOTAL SHEETS
12	Ora	5	1.3/1.7	3	127

REGISTERED CIVIL ENGINEER — DATE: 01-22-09

PLANS APPROVAL DATE: 3-23-09

JOSEPH W. SAWTELLE — No. C 60110 — Exp. 6/30/10 — CIVIL — REGISTERED PROFESSIONAL ENGINEER — STATE OF CALIFORNIA

THE STATE OF CALIFORNIA OR ITS OFFICERS OR AGENTS SHALL NOT BE RESPONSIBLE FOR THE ACCURACY OR COMPLETENESS OF SCANNED COPIES OF THIS PLAN SHEET.

ORANGE COUNTY TRANSPORTATION AUTHORITY
550 SOUTH MAIN STREET
ORANGE, CA 92863

RMC, INC.
6 HUTTON CENTRE DRIVE
SUITE 1250
SANTA ANA, CA 92707

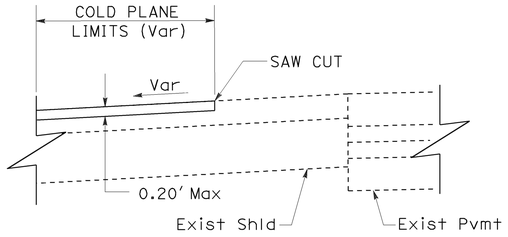

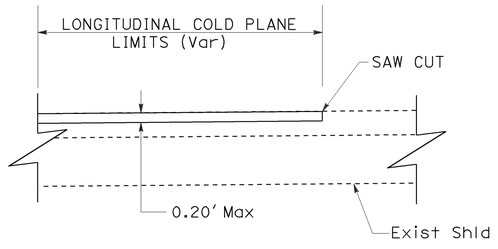

COLD PLANE DETAILS

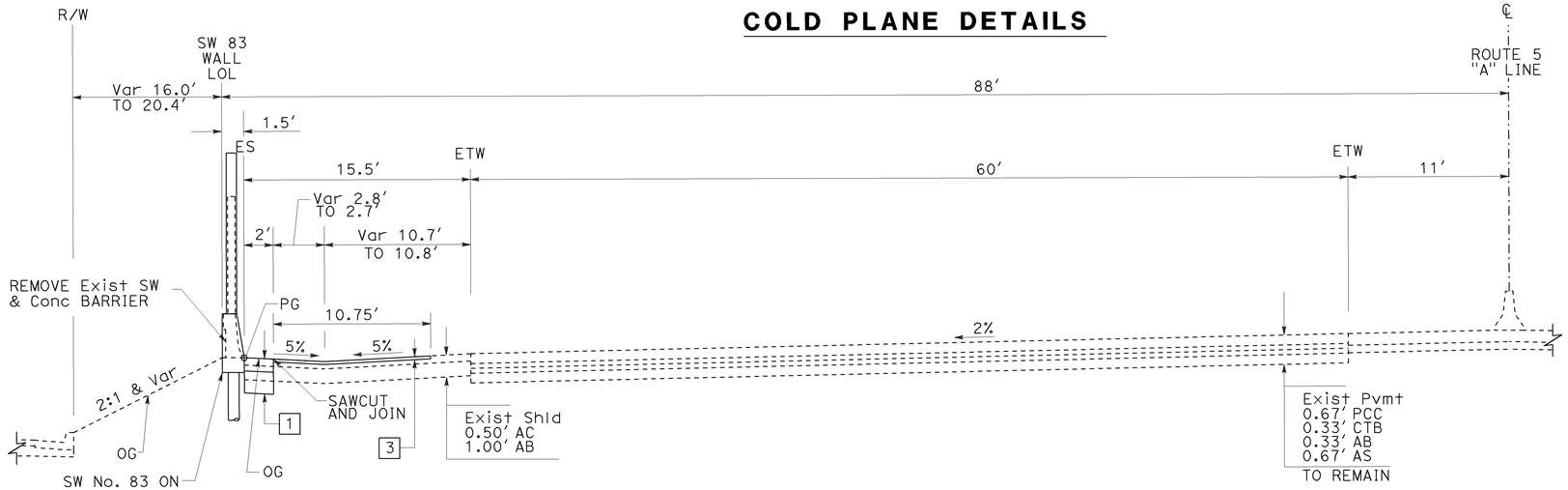

SB ROUTE-5 "A" LINE

"A" Sta 84+10 TO Sta 84+70

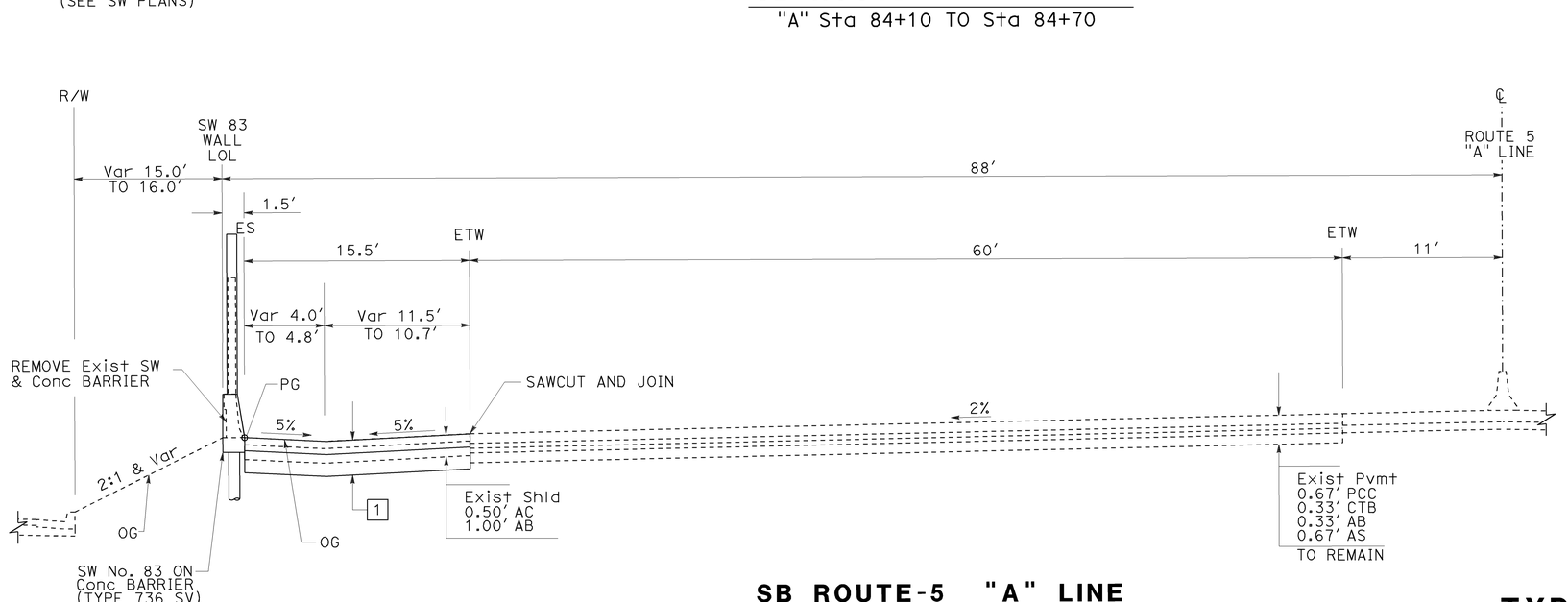

SB ROUTE-5 "A" LINE

"A" Sta 83+94 TO Sta 84+10

TYPICAL CROSS SECTIONS

NO SCALE

X-2

STATE OF CALIFORNIA - DEPARTMENT OF TRANSPORTATION — DESIGN F

CONSULTANT FUNCTIONAL SUPERVISOR: JAMAL SALMAN

CALCULATED-DESIGNED BY: J. SAWTELLE

CHECKED BY: C. SOSA

REVISED BY	DATE REVISED

LAST REVISION — DATE PLOTTED => 29-MAR-2009 — TIME PLOTTED => 13:52 — 01-20-09

Dist	COUNTY	ROUTE	POST MILES TOTAL PROJECT	SHEET No.	TOTAL SHEETS
12	Ora	5	1.3/1.7	4	127

Joseph W. Sawtelle 01-22-09
REGISTERED CIVIL ENGINEER DATE

3-23-09
PLANS APPROVAL DATE

REGISTERED PROFESSIONAL ENGINEER
JOSEPH W. SAWTELLE
No. C 60110
Exp. 6/30/10
CIVIL
STATE OF CALIFORNIA

THE STATE OF CALIFORNIA OR ITS OFFICERS OR AGENTS SHALL NOT BE RESPONSIBLE FOR THE ACCURACY OR COMPLETENESS OF SCANNED COPIES OF THIS PLAN SHEET.

ORANGE COUNTY
TRANSPORTATION AUTHORITY
550 SOUTH MAIN STREET
ORANGE, CA 92863

RMC, INC.
6 HUTTON CENTRE DRIVE
SUITE 1250
SANTA ANA, CA 92707

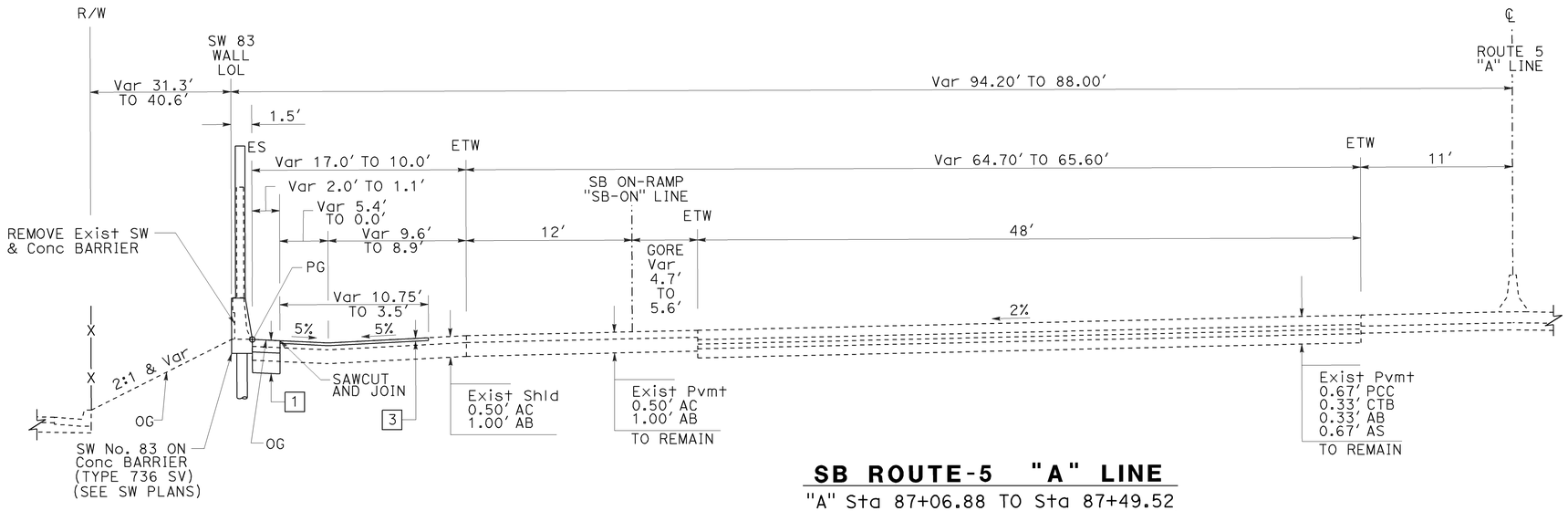

SB ROUTE-5 "A" LINE

"A" Sta 87+06.88 TO Sta 87+49.52
& "SB-ON" Sta 7+07.50 TO Sta 7+50

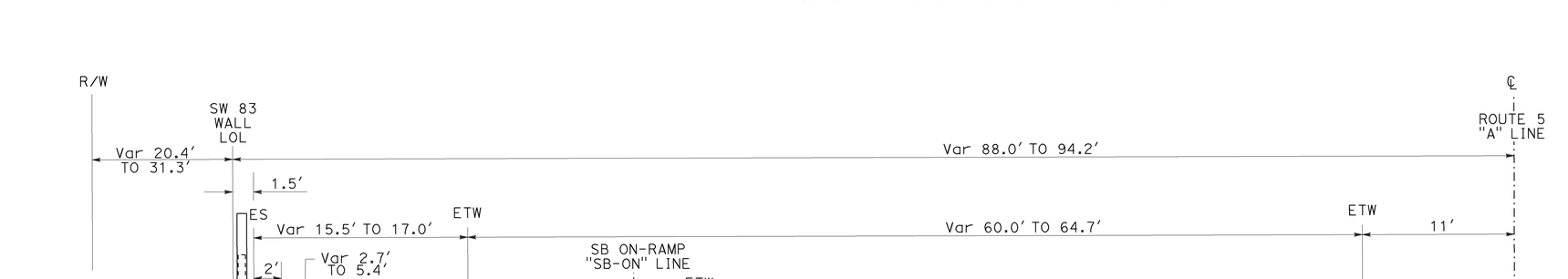

SB ROUTE-5 "A" LINE

"A" Sta 84+70 TO Sta 87+06.88
& "SB-ON" Sta 4+69.96 TO Sta 7+07.50

TYPICAL CROSS SECTIONS

NO SCALE

X-3

STATE OF CALIFORNIA - DEPARTMENT OF TRANSPORTATION
DESIGN F
CONSULTANT FUNCTIONAL SUPERVISOR: JAMAL SALMAN
CALCULATED-DESIGNED BY: J. SAWTELLE
CHECKED BY: C. SOSA
REVISED BY
DATE REVISED

LAST REVISION 01-20-09
DATE PLOTTED => 29-MAR-2009
TIME PLOTTED => 13:52

BORDER LAST REVISED 4/11/2008
RELATIVE BORDER SCALE IS IN INCHES 0 1 2 3
USERNAME => trmnguye
DGN FILE => c0g940ca003.dgn
CU 12231
EA 0G9401

Dist	COUNTY	ROUTE	POST MILES TOTAL PROJECT	SHEET No.	TOTAL SHEETS
12	Ora	5	1.3/1.7	5	127

Joseph W. Sawtelle 01-22-09
REGISTERED CIVIL ENGINEER DATE

JOSEPH W. SAWTELLE No. C 60110 Exp. 6/30/10 CIVIL — REGISTERED PROFESSIONAL ENGINEER — STATE OF CALIFORNIA

3-23-09
PLANS APPROVAL DATE

THE STATE OF CALIFORNIA OR ITS OFFICERS OR AGENTS SHALL NOT BE RESPONSIBLE FOR THE ACCURACY OR COMPLETENESS OF SCANNED COPIES OF THIS PLAN SHEET.

ORANGE COUNTY TRANSPORTATION AUTHORITY
550 SOUTH MAIN STREET
ORANGE, CA 92863

RMC, INC.
6 HUTTON CENTRE DRIVE
SUITE 1250
SANTA ANA, CA 92707

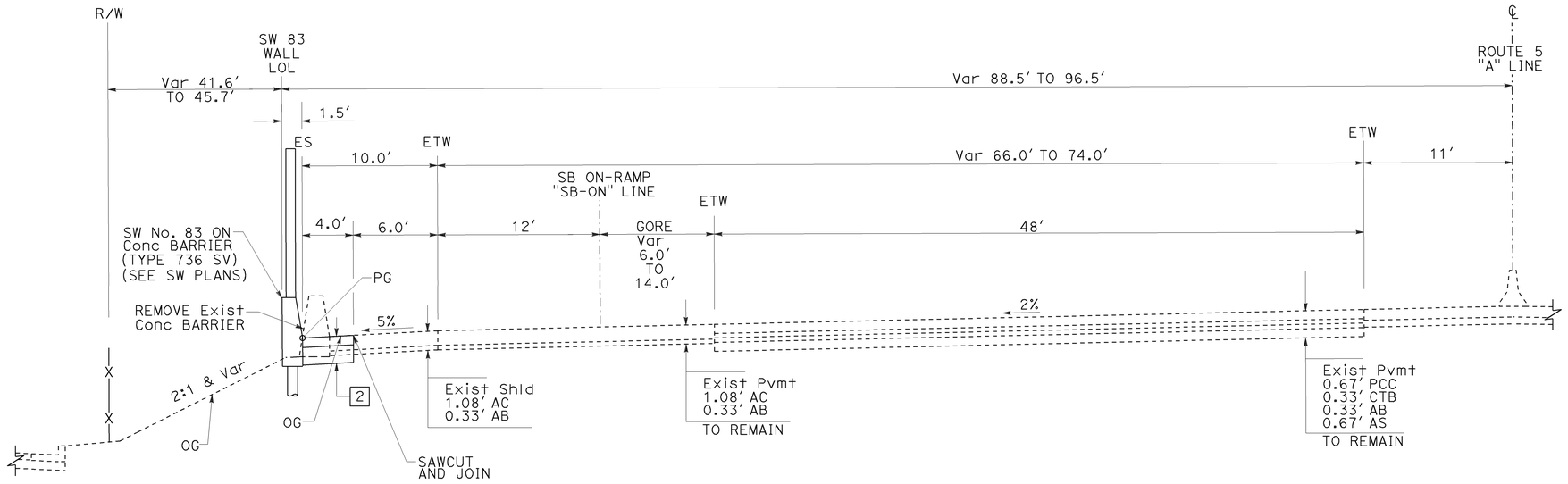

SB ROUTE-5 "A" LINE

"A" Sta 87+70 TO 89+36.89
& "SB-ON" Sta 7+70.02 TO 9+37.15

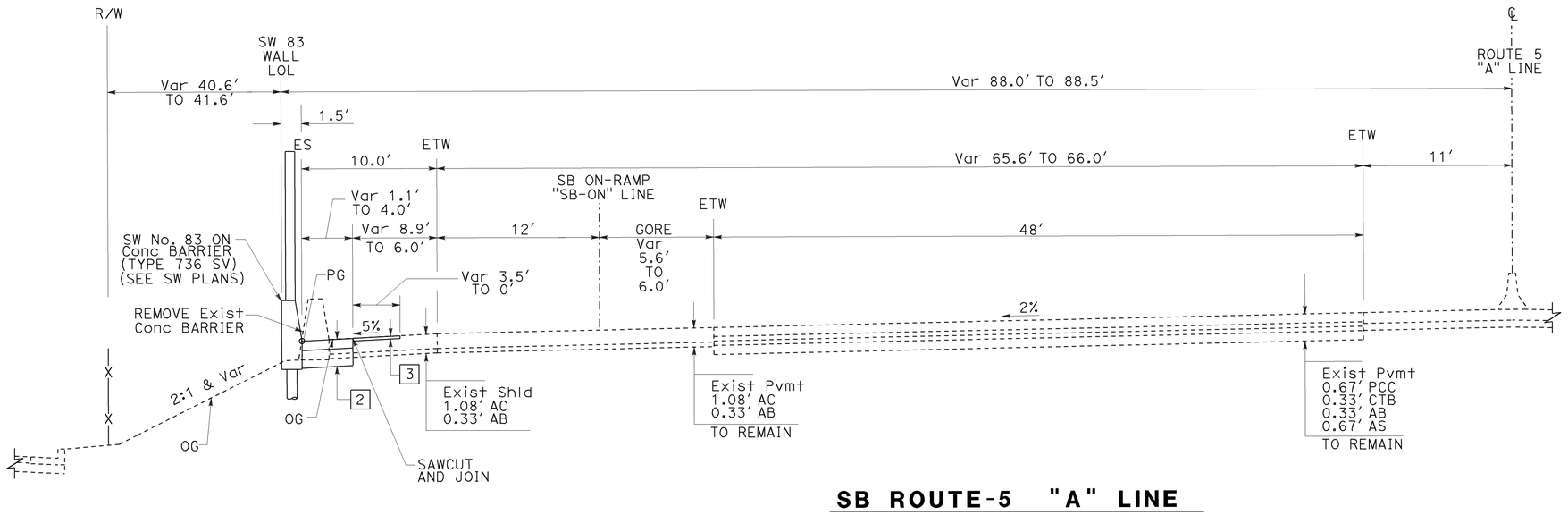

SB ROUTE-5 "A" LINE

"A" Sta 87+49.52 TO 87+70
& "SB-ON" Sta 7+50 TO 7+70.02

TYPICAL CROSS SECTIONS

NO SCALE

X-4

REVISED BY	DATE REVISED

CALCULATED-DESIGNED BY: C. SOSA
CHECKED BY: J. SAWTELLE

CONSULTANT FUNCTIONAL SUPERVISOR: JAMAL SALMAN

STATE OF CALIFORNIA - DEPARTMENT OF TRANSPORTATION
DESIGN F

Caltrans

LAST REVISION | DATE PLOTTED => 23-MAR-2009
01-20-09 | TIME PLOTTED => 13:52

BORDER LAST REVISED 4/11/2008

RELATIVE BORDER SCALE IS IN INCHES 0 1 2 3

USERNAME => trmnguye
DGN FILE => c0g940ca004.dgn

CU 12231

EA 0G9401

Dist	COUNTY	ROUTE	POST MILES TOTAL PROJECT	SHEET No.	TOTAL SHEETS
12	Ora	5	1.3/1.7	6	127

Joseph W. Sawtelle 01-22-09
REGISTERED CIVIL ENGINEER DATE

3-23-09
PLANS APPROVAL DATE

REGISTERED PROFESSIONAL ENGINEER
JOSEPH W. SAWTELLE
No. C 60110
Exp. 6/30/10
CIVIL
STATE OF CALIFORNIA

THE STATE OF CALIFORNIA OR ITS OFFICERS OR AGENTS SHALL NOT BE RESPONSIBLE FOR THE ACCURACY OR COMPLETENESS OF SCANNED COPIES OF THIS PLAN SHEET.

ORANGE COUNTY
TRANSPORTATION AUTHORITY
550 SOUTH MAIN STREET
ORANGE, CA 92863

RMC, INC.
6 HUTTON CENTRE DRIVE
SUITE 1250
SANTA ANA, CA 92707

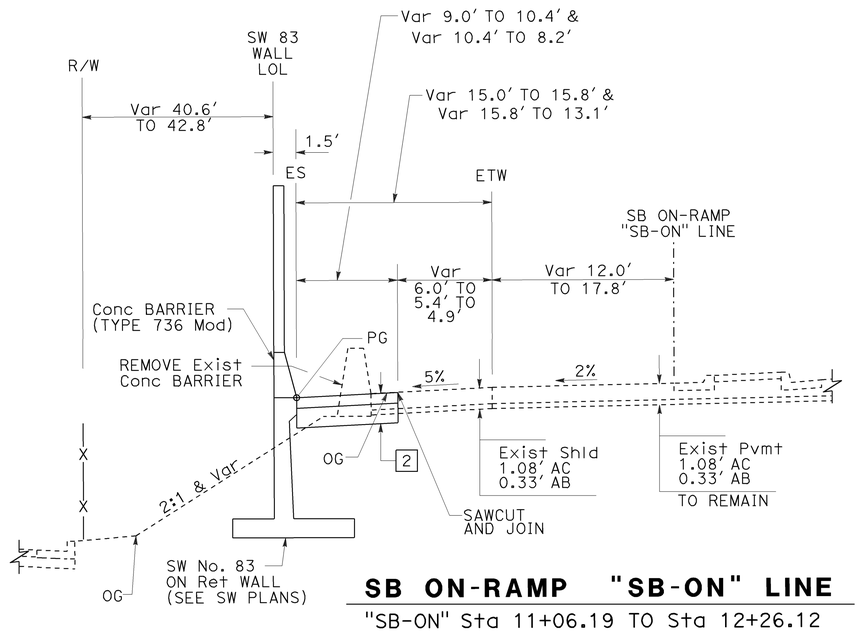

SB ON-RAMP "SB-ON" LINE

"SB-ON" Sta 11+06.19 TO Sta 12+26.12

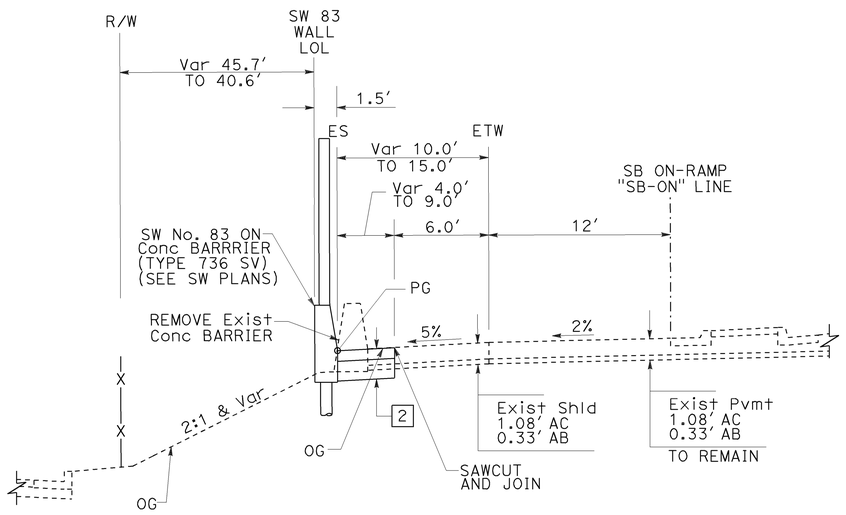

SB ON-RAMP "SB-ON" LINE

"SB-ON" Sta 9+37.15 TO Sta 11+06.19

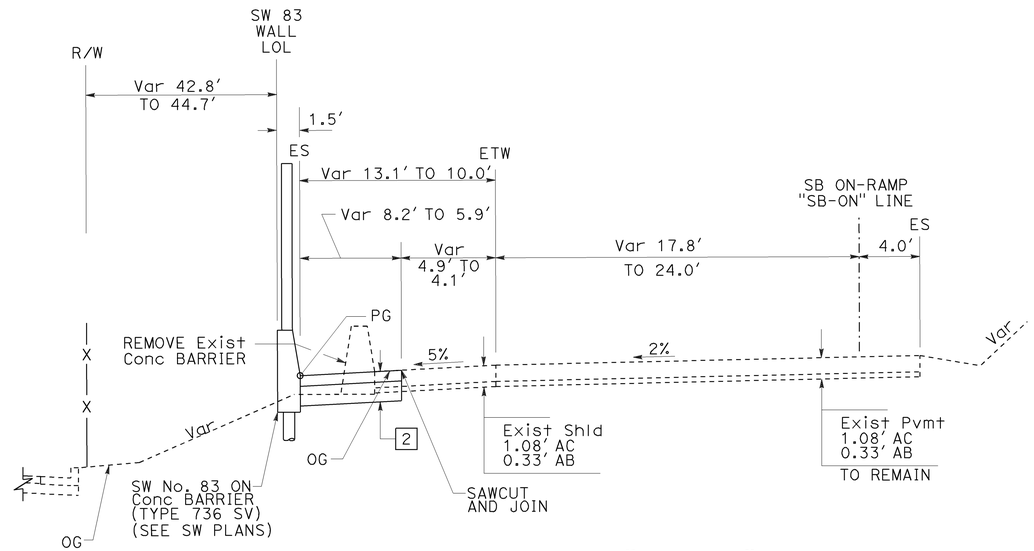

SB ON-RAMP "SB-ON" LINE

"SB-ON" Sta 12+26.12 TO Sta 13+15

TYPICAL CROSS SECTIONS

NO SCALE

X-5

REVISED BY	DATE REVISED

C. SOSA — CALCULATED-DESIGNED BY
J. SAWTELLE — CHECKED BY
JAMAL SALMAN — CONSULTANT FUNCTIONAL SUPERVISOR
STATE OF CALIFORNIA - DEPARTMENT OF TRANSPORTATION
DESIGN F

LAST REVISION DATE PLOTTED => 23-MAR-2009
TIME PLOTTED => 13:52
01-20-09

BORDER LAST REVISED 4/11/2008
RELATIVE BORDER SCALE IS IN INCHES 0 1 2 3
USERNAME => trmnguye
DGN FILE => c0g940ca005.dgn
CU 12231
EA 0G9401

Dist	COUNTY	ROUTE	POST MILES TOTAL PROJECT	SHEET No.	TOTAL SHEETS
12	Ora	5	1.3/1.7	7	127

Joseph W. Sawtelle 01-22-09
REGISTERED CIVIL ENGINEER DATE

3-23-09
PLANS APPROVAL DATE

REGISTERED PROFESSIONAL ENGINEER — JOSEPH W. SAWTELLE — No. C 60110 — Exp. 6/30/10 — CIVIL — STATE OF CALIFORNIA

THE STATE OF CALIFORNIA OR ITS OFFICERS OR AGENTS SHALL NOT BE RESPONSIBLE FOR THE ACCURACY OR COMPLETENESS OF SCANNED COPIES OF THIS PLAN SHEET.

ORANGE COUNTY
TRANSPORTATION AUTHORITY
550 SOUTH MAIN STREET
ORANGE, CA 92863

RMC, INC.
6 HUTTON CENTRE DRIVE
SUITE 1250
SANTA ANA, CA 92707

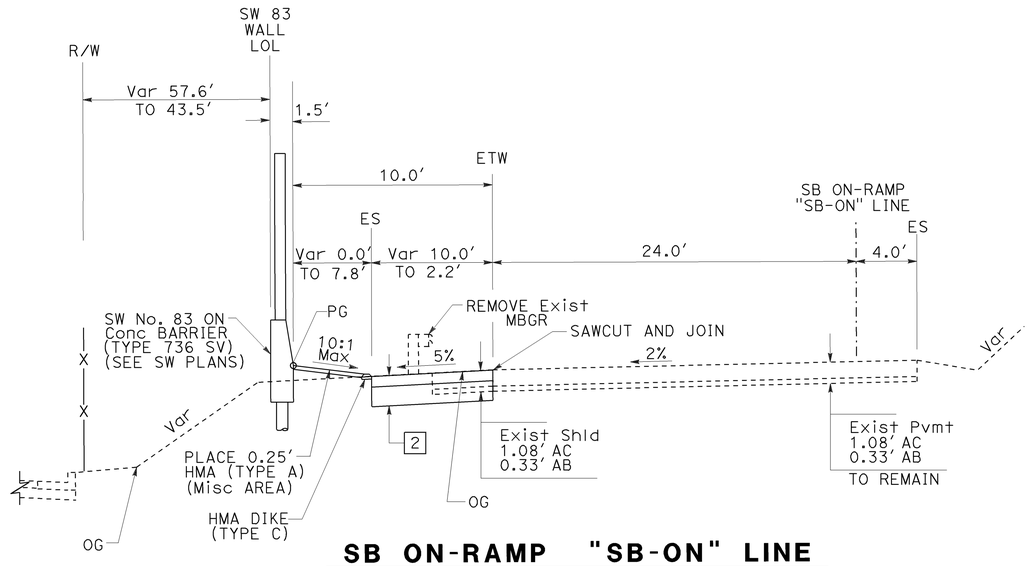

SB ON-RAMP "SB-ON" LINE

"SB-ON" Sta 17+05 to Sta 17+93.73

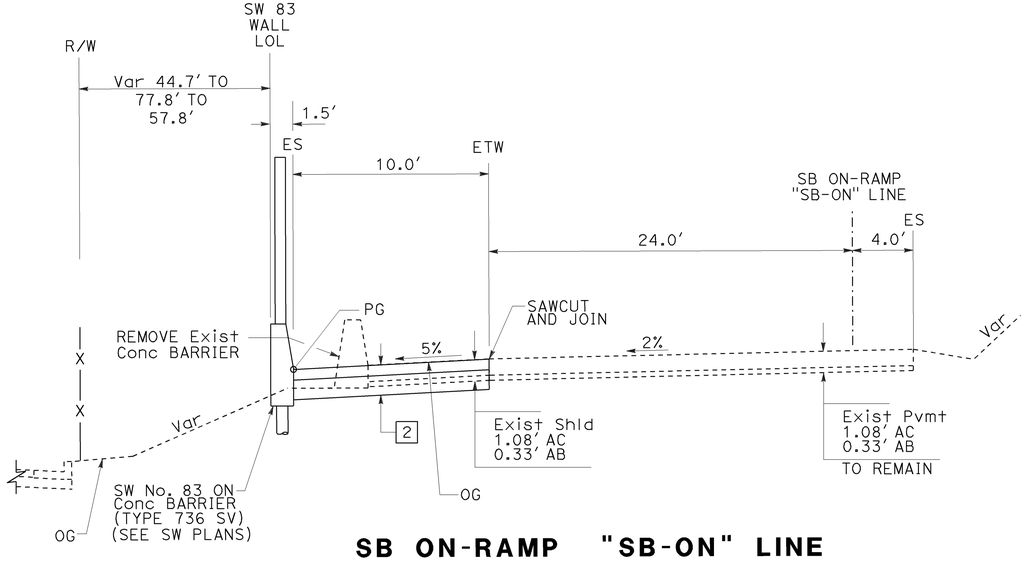

SB ON-RAMP "SB-ON" LINE

"SB-ON" Sta 13+15 TO Sta 17+05

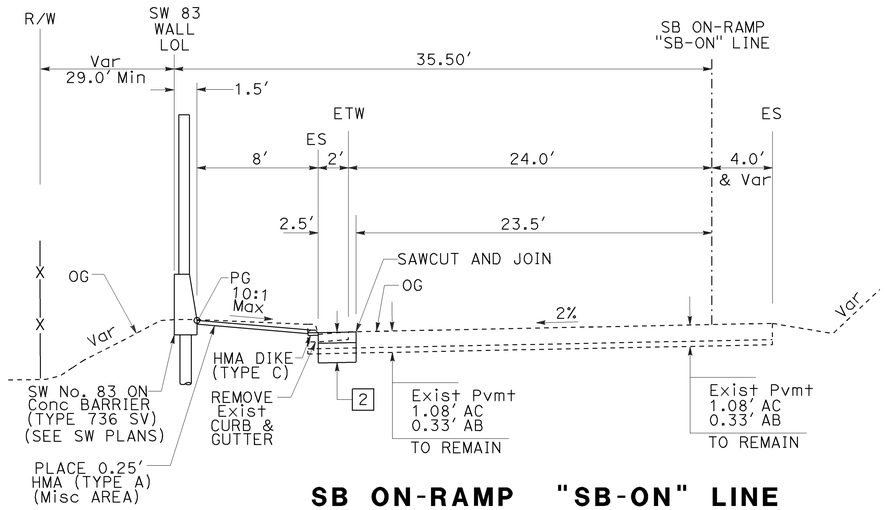

SB ON-RAMP "SB-ON" LINE

"SB-ON" Sta 17+93.73 TO Sta 18+65

TYPICAL CROSS SECTIONS

NO SCALE

X-6

REVISED BY	DATE REVISED

CALCULATED-DESIGNED BY: C. SOSA
CHECKED BY: J. SAWTELLE
CONSULTANT FUNCTIONAL SUPERVISOR: JAMAL SALMAN
STATE OF CALIFORNIA - DEPARTMENT OF TRANSPORTATION
DESIGN F
Caltrans

LAST REVISION DATE PLOTTED => 23-MAR-2009
TIME PLOTTED => 13:53
01-20-09

BORDER LAST REVISED 4/11/2008
RELATIVE BORDER SCALE IS IN INCHES 0 1 2 3
USERNAME => trmnguye
DGN FILE => c0g940ca006.dgn
CU 12231
EA 0G9401

Dist	COUNTY	ROUTE	POST MILES TOTAL PROJECT	SHEET No.	TOTAL SHEETS
12	Ora	5	1.3/1.7	8	127

Joseph W. Sawtelle 01-22-09
REGISTERED CIVIL ENGINEER DATE

3-23-09
PLANS APPROVAL DATE

REGISTERED PROFESSIONAL ENGINEER
JOSEPH W. SAWTELLE
No. C 60110
Exp. 6/30/10
CIVIL
STATE OF CALIFORNIA

THE STATE OF CALIFORNIA OR ITS OFFICERS OR AGENTS SHALL NOT BE RESPONSIBLE FOR THE ACCURACY OR COMPLETENESS OF SCANNED COPIES OF THIS PLAN SHEET.

ORANGE COUNTY
TRANSPORTATION AUTHORITY
550 SOUTH MAIN STREET
ORANGE, CA 92863

RMC, INC.
6 HUTTON CENTRE DRIVE
SUITE 1250
SANTA ANA, CA 92707

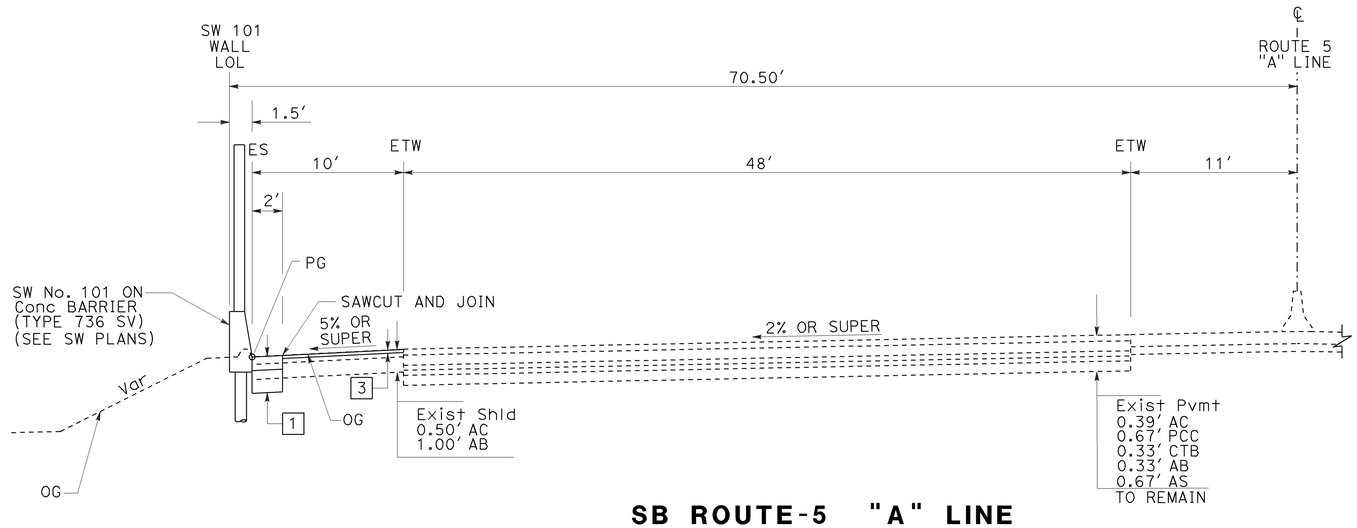

SB ROUTE-5 "A" LINE

"A" Sta 100+72 TO Sta 102+40

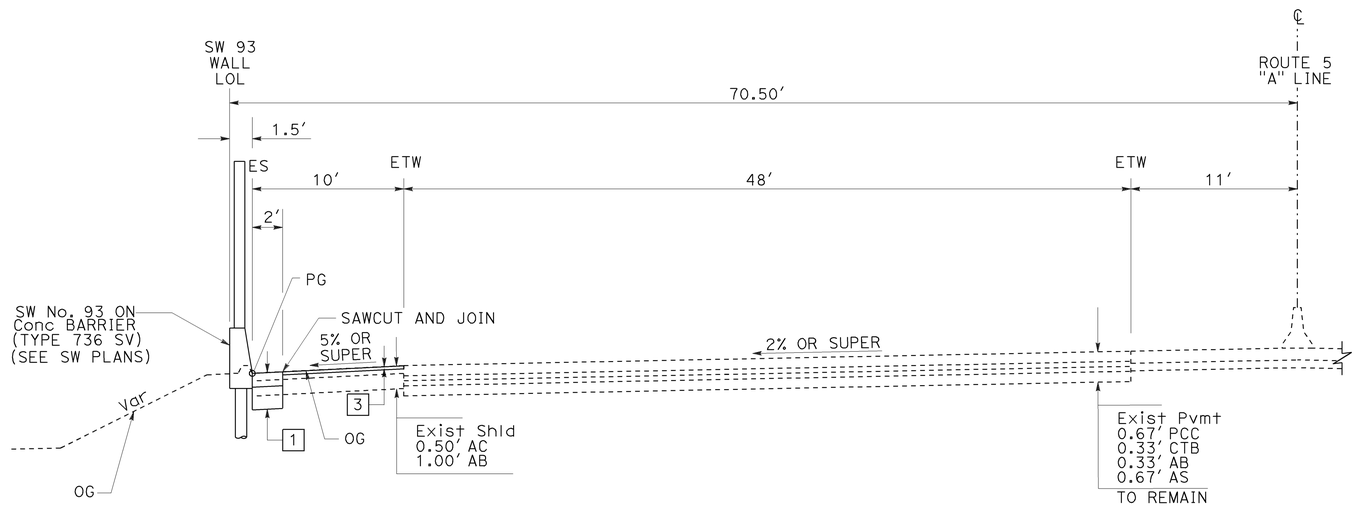

SB ROUTE-5 "A" LINE

"A" Sta 93+65 TO Sta 97+66

TYPICAL CROSS SECTIONS

NO SCALE

X-7

STATE OF CALIFORNIA - DEPARTMENT OF TRANSPORTATION
DESIGN F
CONSULTANT FUNCTIONAL SUPERVISOR: JAMAL SALMAN
CALCULATED-DESIGNED BY
CHECKED BY
C. SOSA
J. SAWTELLE
REVISED BY
DATE REVISED

LAST REVISION DATE PLOTTED => 23-MAR-2009
TIME PLOTTED => 13:53
01-20-09

Dist	COUNTY	ROUTE	POST MILES TOTAL PROJECT	SHEET No.	TOTAL SHEETS
12	Ora	5	1.3/1.7	9	127

Joseph W. Sawtelle 01-22-09
REGISTERED CIVIL ENGINEER DATE

3-23-09
PLANS APPROVAL DATE

REGISTERED PROFESSIONAL ENGINEER
JOSEPH W. SAWTELLE
No. C 60110
Exp. 6/30/10
CIVIL
STATE OF CALIFORNIA

THE STATE OF CALIFORNIA OR ITS OFFICERS OR AGENTS SHALL NOT BE RESPONSIBLE FOR THE ACCURACY OR COMPLETENESS OF SCANNED COPIES OF THIS PLAN SHEET.

ORANGE COUNTY
TRANSPORTATION AUTHORITY
550 SOUTH MAIN STREET
ORANGE, CA 92863

RMC, INC.
6 HUTTON CENTRE DRIVE
SUITE 1250
SANTA ANA, CA 92707

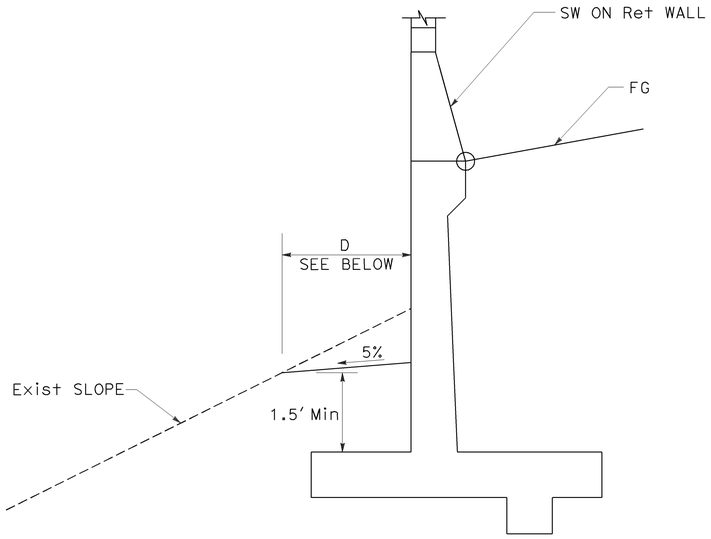

SOUNDWALL No. 83
GRADING BEHIND SW

SW 83 WALL LOL Sta	D
FROM Sta 9+93 TO Sta 11+00	3'
FROM Sta 18+24 TO Sta 19+25	3'

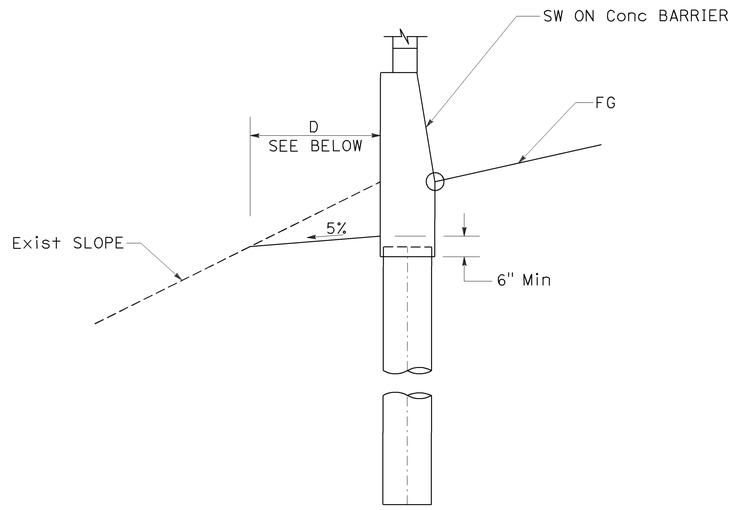

SOUNDWALL No. 83, 93, 101
GRADING BEHIND SW

SW 83 WALL LOL Sta	D
FROM Sta 11+00 TO Sta 13+00	2'
FROM Sta 14+00 TO Sta 16+75	2'
FROM Sta 16+75 TO Sta 18+24	3'
FROM Sta 21+00 TO Sta 22+25	2'
FROM Sta 22+25 TO Sta 25+88.51	3'

SW 93 WALL LOL Sta	D
FROM Sta 10+00 TO Sta 13+82.70	3'

SW 101 WALL LOL Sta	D
FROM Sta 17+78.88 TO Sta 18+58.78	3'

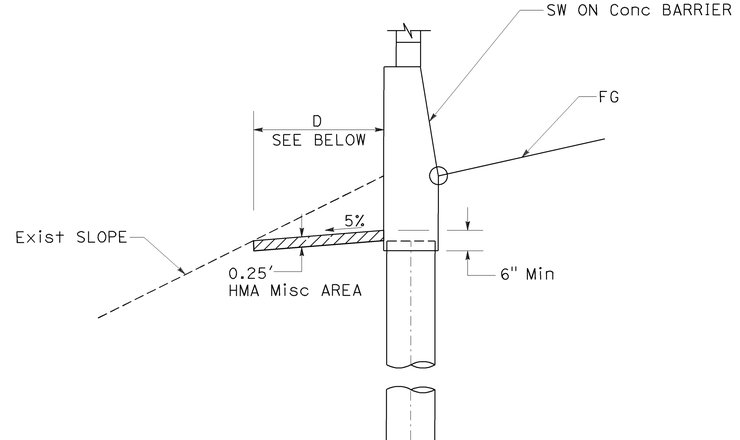

SOUNDWALL No. 83
HMA Misc AREA BEHIND SW

SW 83 WALL LOL Sta	D
FROM Sta 13+00 TO Sta 14+00	1'
FROM Sta 19+25 TO Sta 21+00	1'

TYPICAL CROSS SECTIONS

NO SCALE

X-8

REVISED BY | DATE REVISED
C. SOSA | J. SAWTELLE
CALCULATED-DESIGNED BY | CHECKED BY
CONSULTANT FUNCTIONAL SUPERVISOR: JAMAL SALMAN
STATE OF CALIFORNIA - DEPARTMENT OF TRANSPORTATION
Caltrans® DESIGN F

LAST REVISION 01-20-09
DATE PLOTTED => 29-MAR-2009
TIME PLOTTED => 13:53

BORDER LAST REVISED 4/11/2008
RELATIVE BORDER SCALE IS IN INCHES 0 1 2 3
USERNAME => trmnguye
DGN FILE => c0g940ca008.dgn
CU 12231
EA 0G9401

Dist	COUNTY	ROUTE	POST MILES TOTAL PROJECT	SHEET No.	TOTAL SHEETS
12	Ora	5	1.3/1.7	10	127

Joseph W. Sawtelle 01-22-09
REGISTERED CIVIL ENGINEER DATE

3-23-09
PLANS APPROVAL DATE

REGISTERED PROFESSIONAL ENGINEER — JOSEPH W. SAWTELLE — No. C 60110 — Exp. 6/30/10 — CIVIL — STATE OF CALIFORNIA

THE STATE OF CALIFORNIA OR ITS OFFICERS OR AGENTS SHALL NOT BE RESPONSIBLE FOR THE ACCURACY OR COMPLETENESS OF SCANNED COPIES OF THIS PLAN SHEET.

ORANGE COUNTY
TRANSPORTATION AUTHORITY
550 SOUTH MAIN STREET
ORANGE, CA 92863

RMC, INC.
6 HUTTON CENTRE DRIVE
SUITE 1250
SANTA ANA, CA 92707

NOTE:
FOR COMPLETE RIGHT OF WAY AND ACCURATE ACCESS DATA, SEE RIGHT OF WAY RECORD MAPS AT DISTRICT OFFICE.

LEGEND:

[X] PAVEMENT STRUCTURAL SECTION TYPE

(X) CURVA DATA NUMBER

SOUNDWALL ON BARRIER

SOUNDWALL ON RETAINING WALL

BASIS OF BEARINGS AND COORDINATES:

THE BASIS OF BEARINGS FOR THIS SURVEY IS THE NORTH AMERICAN DATUM OF 1983 (NAD 83, 1991.35 EPOCH), CALIFORNIA COORDINATE SYSTEM OF 1983 (CCS 83), ZONE 6 BASED LOCALLY BETWEEN:
4342: ORANGE COUNTY GPS STATION 4342
4344R1: ORANGE COUNTY GPS STATION 4344R1
BEING NORTH 80-40-08 WEST AS DERIVED FROM GEODETIC VALUES PUBLISHED BY THE COUNTY OF ORANGE GEOMATICS LAND INFORMATION SYSTEM.

POINT 4342 N: 2098638.58 E: 6152803.64 ELEV: 523.97
POINT 4344R1 N: 2099445.18 E: 6147894.76 ELEV: 288.99

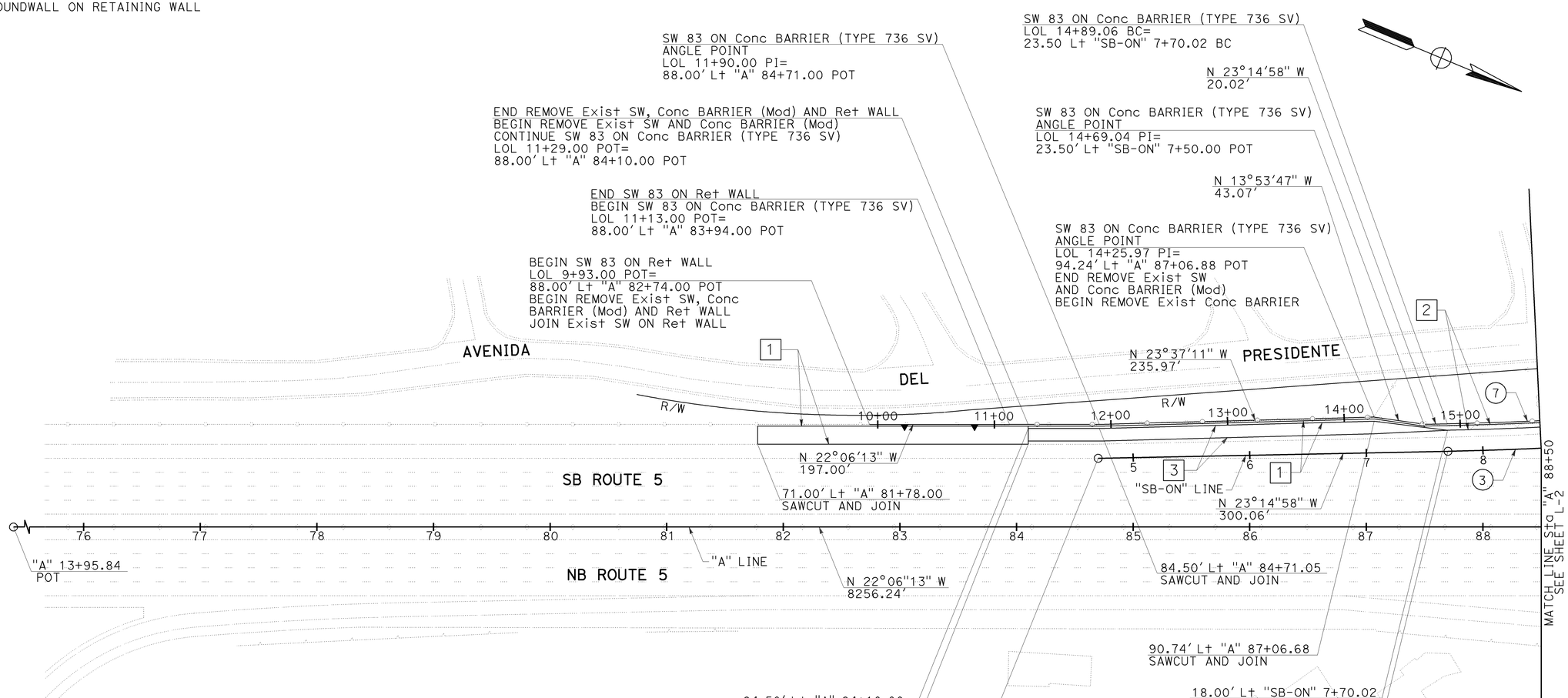

CURVE DATA

No.	R	Δ	T	L
(3)	3000.00'	3°11'29"	83.57'	167.10'
(7)	2976.50'	3°11'29"	82.92'	165.79'

LAYOUT

SCALE: 1"=50'

L-1

REVISED BY	DATE REVISED

CALCULATED-DESIGNED BY: C. SOSA
CHECKED BY: J. SAWTELLE
CONSULTANT FUNCTIONAL SUPERVISOR: JAMAL SALMAN
STATE OF CALIFORNIA - DEPARTMENT OF TRANSPORTATION
DESIGN F
Caltrans

LAST REVISION: DATE PLOTTED => 29-MAR-2009
01-20-09 TIME PLOTTED => 13:53

BORDER LAST REVISED 4/11/2008
RELATIVE BORDER SCALE IS IN INCHES 0 1 2 3
USERNAME => trmnguye
DGN FILE => c0g940ea001.dgn
CU 12231
EA 0G9401

Dist	COUNTY	ROUTE	POST MILES TOTAL PROJECT	SHEET No.	TOTAL SHEETS
12	Ora	5	1.3/1.7	11	127

Joseph W. Sawtelle 01-22-09
REGISTERED CIVIL ENGINEER DATE

JOSEPH W. SAWTELLE No. C 60110 Exp. 6/30/10 CIVIL — REGISTERED PROFESSIONAL ENGINEER — STATE OF CALIFORNIA

3-23-09
PLANS APPROVAL DATE

THE STATE OF CALIFORNIA OR ITS OFFICERS OR AGENTS SHALL NOT BE RESPONSIBLE FOR THE ACCURACY OR COMPLETENESS OF SCANNED COPIES OF THIS PLAN SHEET.

ORANGE COUNTY TRANSPORTATION AUTHORITY
550 SOUTH MAIN STREET
ORANGE, CA 92863

RMC, INC.
6 HUTTON CENTRE DRIVE
SUITE 1250
SANTA ANA, CA 92707

NOTES:

1. FOR COMPLETE RIGHT OF WAY AND ACCURATE ACCESS DATA, SEE RIGHT OF WAY RECORD MAPS AT DISTRICT OFFICE.
2. SEE SHEETS C-2 AND C-3 FOR CURB RAMP DETAILS.

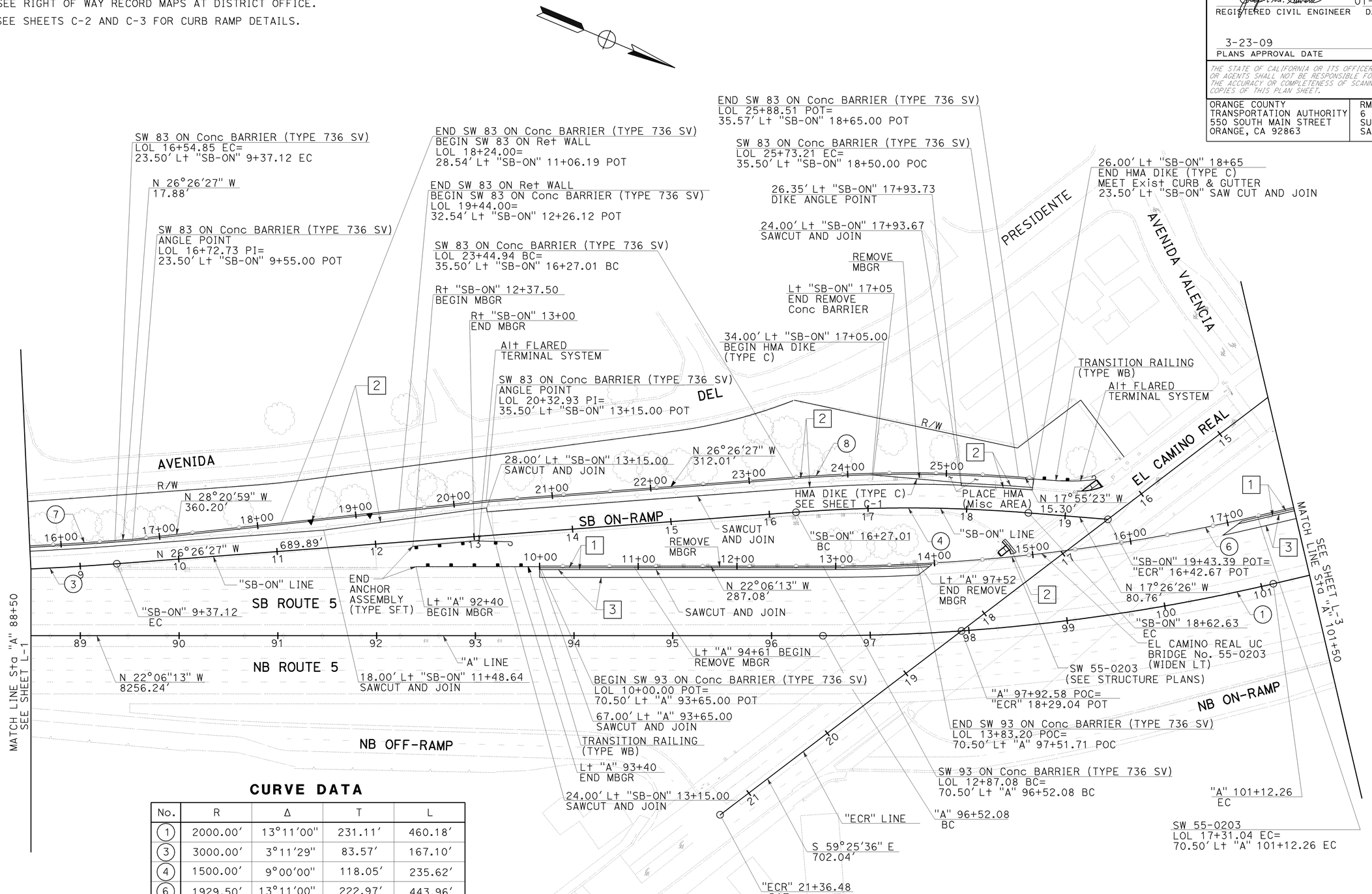

CURVE DATA

No.	R	Δ	T	L
(1)	2000.00'	13°11'00"	231.11'	460.18'
(3)	3000.00'	3°11'29"	83.57'	167.10'
(4)	1500.00'	9°00'00"	118.05'	235.62'
(6)	1929.50'	13°11'00"	222.97'	443.96'
(7)	2976.50'	3°11'29"	82.92'	165.79'
(8)	1535.50'	8°31'03"	114.34'	228.27'

LAYOUT

SCALE: 1"=50'

L-2

CALCULATED-DESIGNED BY: C. SOSA
CHECKED BY: J. SAWTELLE
CONSULTANT FUNCTIONAL SUPERVISOR: JAMAL SALMAN
STATE OF CALIFORNIA - DEPARTMENT OF TRANSPORTATION
Caltrans® DESIGN F
REVISED BY | DATE REVISED

LAST REVISION | DATE PLOTTED => 29-MAR-2009
01-21-09 | TIME PLOTTED => 14:27

BORDER LAST REVISED 4/11/2008
RELATIVE BORDER SCALE IS IN INCHES 0 1 2 3
USERNAME => trstrk
DGN FILE => c0g940ea002.dgn
CU 12231
EA 0G9401

Dist	COUNTY	ROUTE	POST MILES TOTAL PROJECT	SHEET No.	TOTAL SHEETS
12	Ora	5	1.3/1.7	12	127

Joseph W. Sawtelle 01-22-09
REGISTERED CIVIL ENGINEER DATE

3-23-09
PLANS APPROVAL DATE

REGISTERED PROFESSIONAL ENGINEER — JOSEPH W. SAWTELLE — No. C 60110 — Exp. 6/30/10 — CIVIL — STATE OF CALIFORNIA

THE STATE OF CALIFORNIA OR ITS OFFICERS OR AGENTS SHALL NOT BE RESPONSIBLE FOR THE ACCURACY OR COMPLETENESS OF SCANNED COPIES OF THIS PLAN SHEET.

ORANGE COUNTY
TRANSPORTATION AUTHORITY
550 SOUTH MAIN STREET
ORANGE, CA 92863

RMC, INC.
6 HUTTON CENTRE DRIVE
SUITE 1250
SANTA ANA, CA 92707

NOTE:

FOR COMPLETE RIGHT OF WAY AND ACCURATE ACCESS DATA, SEE RIGHT OF WAY RECORD MAPS AT DISTRICT OFFICE.

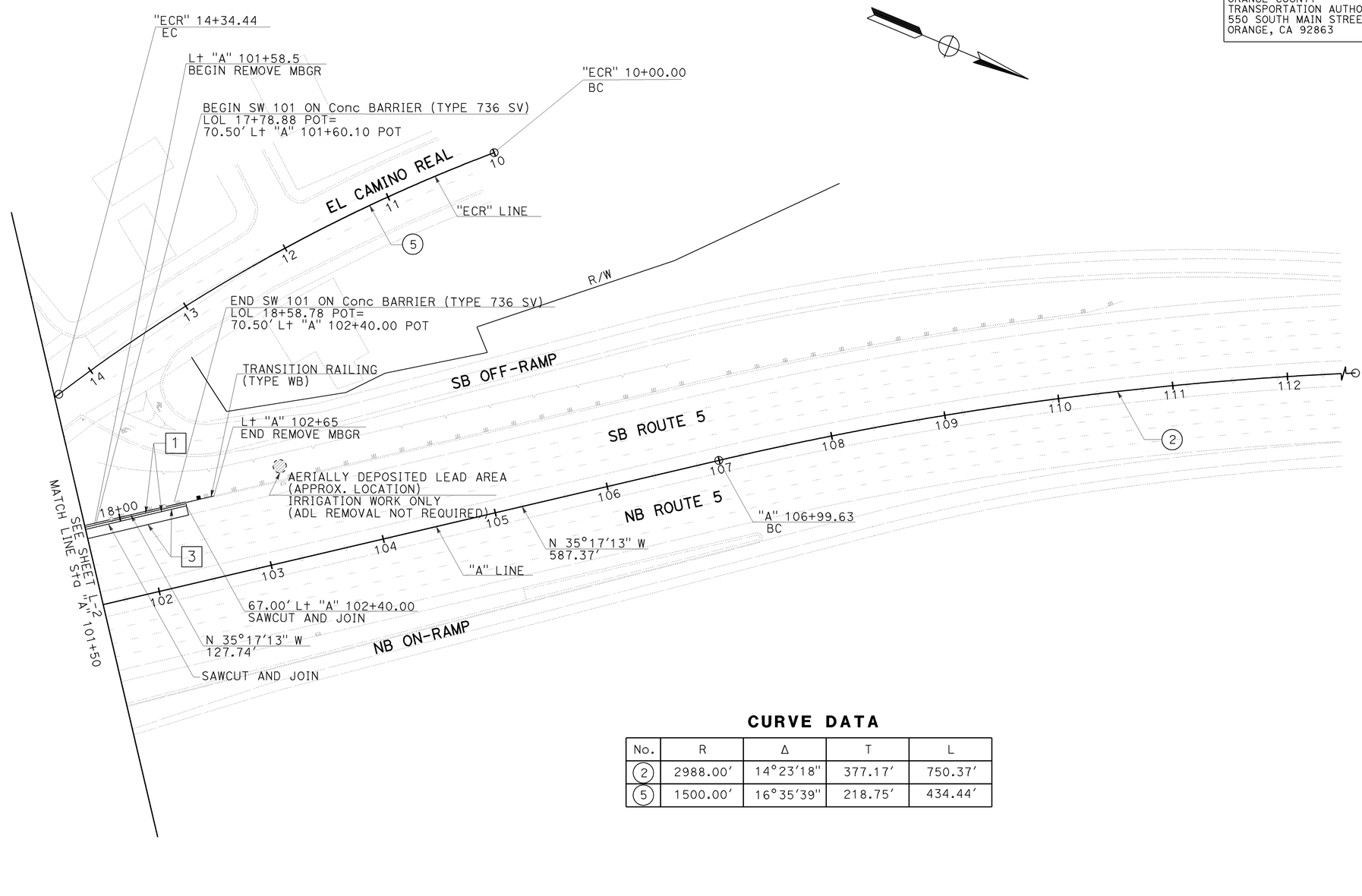

CURVE DATA

No.	R	Δ	T	L
(2)	2988.00'	14°23'18"	377.17'	750.37'
(5)	1500.00'	16°35'39"	218.75'	434.44'

LAYOUT

SCALE: 1"=50'

L-3

REVISED BY | DATE REVISED
C. SOSA | J. SAWTELLE
CALCULATED-DESIGNED BY | CHECKED BY
CONSULTANT FUNCTIONAL SUPERVISOR: JAMAL SALMAN
STATE OF CALIFORNIA - DEPARTMENT OF TRANSPORTATION
DESIGN F

LAST REVISION | DATE PLOTTED => 29-MAR-2009
01-21-09 | TIME PLOTTED => 14:25

BORDER LAST REVISED 4/11/2008

RELATIVE BORDER SCALE IS IN INCHES 0 1 2 3

USERNAME => trstrk
DGN FILE => c0g940ea003.dgn

CU 12231

EA 0G9401

Dist	COUNTY	ROUTE	POST MILES TOTAL PROJECT	SHEET No.	TOTAL SHEETS
12	Ora	5	1.3/1.7	13	127

Joseph W. Sawtelle 01-22-09
REGISTERED CIVIL ENGINEER DATE

3-23-09
PLANS APPROVAL DATE

REGISTERED PROFESSIONAL ENGINEER — JOSEPH W. SAWTELLE — No. C 60110 — Exp. 6/30/10 — CIVIL — STATE OF CALIFORNIA

THE STATE OF CALIFORNIA OR ITS OFFICERS OR AGENTS SHALL NOT BE RESPONSIBLE FOR THE ACCURACY OR COMPLETENESS OF SCANNED COPIES OF THIS PLAN SHEET.

ORANGE COUNTY
TRANSPORTATION AUTHORITY
550 SOUTH MAIN STREET
ORANGE, CA 92863

RMC, INC.
6 HUTTON CENTRE DRIVE
SUITE 1250
SANTA ANA, CA 92707

REVISED BY | DATE REVISED

C. SOSA | J. SAWTELLE

CALCULATED-DESIGNED BY | CHECKED BY

CONSULTANT FUNCTIONAL SUPERVISOR — JAMAL SALMAN

STATE OF CALIFORNIA - DEPARTMENT OF TRANSPORTATION — DESIGN F

Caltrans

LEGEND:

- [X] STRUCTURAL SECTION TYPE, SEE SHEET X-1
- (X) CURVE DATA NUMBER
- (X) POINT NUMBER
- (XXX.XX) EXISTING ELEVATION
- HMA (Misc AREA)

POINT No.	WALL LOL Sta	WALL OFFSET (Rt)	SB-ON STA	SB-ON OFFSET (Lt)	TOP OF DIKE Elev	FL Elev	JOIN BARRIER Elev	SAWCUT Elev
1	24+25	1.50′	17+05.2	34.00′	215.49	215.32	215.49	N/A
2	24+25	11.50′	17+05.2	24.00′	N/A	N/A	N/A	(215.86)
3	24+50	1.40′	17+29.6	34.10′	N/A	N/A	215.67	N/A
4	24+50	4.17′	17+29.6	31.33′	215.40	215.23	N/A	N/A
5	24+50	11.50′	17+29.6	24.00′	N/A	N/A	N/A	(215.79)
6	24+75	1.40′	17+54.1	34.10′	N/A	N/A	215.80	N/A
7	24+75	6.40′	17+54.1	29.10′	215.31	215.14	N/A	N/A
8	24+75	11.50′	17+54.1	24.00′	N/A	N/A	N/A	(215.67)
9	25+00	1.50′	17+78.5	34.00′	N/A	N/A	215.92	N/A
10	25+00	8.22′	17+78.5	27.28′	215.22	215.05	N/A	N/A
11	25+00	11.50′	17+78.5	24.00′	N/A	N/A	N/A	(215.38)
12	25+15.6	1.50′	17+93.7	34.00′	N/A	N/A	216.00	N/A
13	25+15.6	9.15′	17+93.7	26.35′	215.19	215.02	N/A	N/A
14	25+15.6	11.50′	17+93.7	24.00′	N/A	N/A	N/A	(215.22)
15	25+25	1.50′	18+02.9	34.00′	N/A	N/A	216.03	N/A
16	25+25	9.39′	18+02.9	26.11′	215.17	215.00	N/A	N/A
17	25+50	1.50′	18+27.3	34.00′	N/A	N/A	215.87	N/A
18	25+50	9.50′	18+27.3	26.00′	215.10	214.93	N/A	N/A
19	25+75	1.50′	18+50	34.00′	N/A	N/A	215.79	N/A
20	25+75	9.57′	18+50	25.93′	215.04	214.87	N/A	N/A
21	25+88.5	1.50′	18+65	34.07′	N/A	N/A	215.79	N/A
22	25+88.5	9.57′	18+65	25.93′	215.01	(214.84)	N/A	N/A

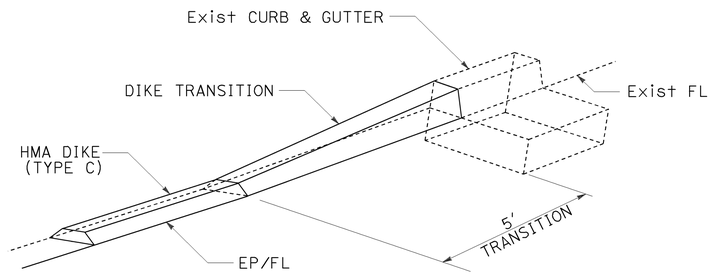

DIKE TRANSITION DETAIL
HMA DIKE (TYPE C) TO Exist CURB & GUTTER
NO SCALE

CURVE DATA

No.	R	Δ	T	L
(4)	1500.00′	9°00′00"	118.05′	235.62′
(8)	1535.50′	8°31′03"	114.34′	228.27′

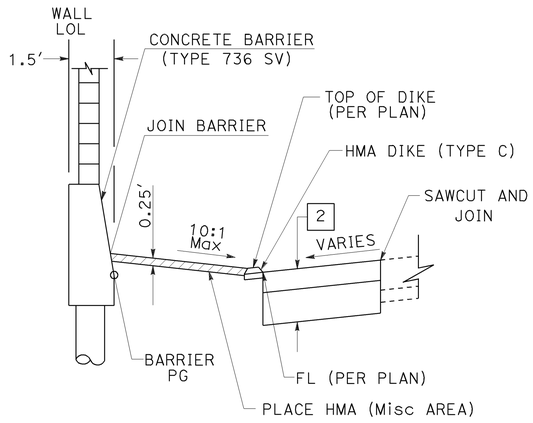

SECTION A-A
NO SCALE

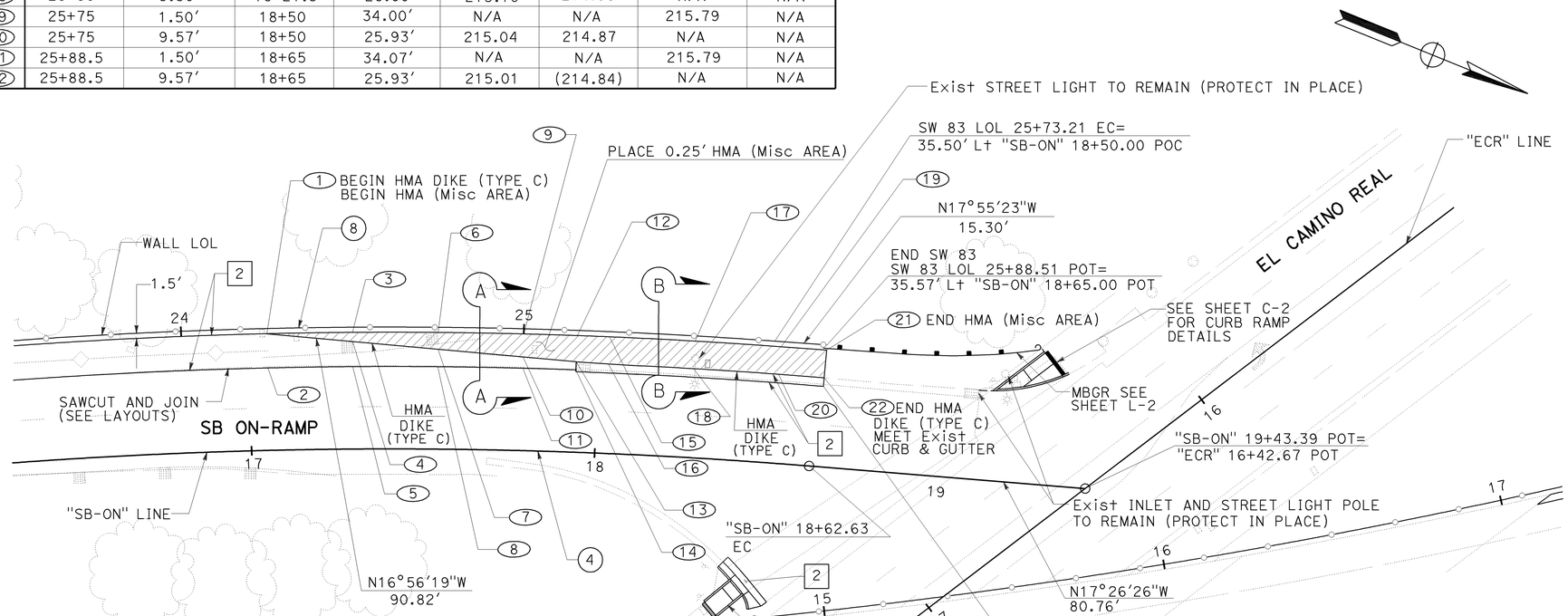

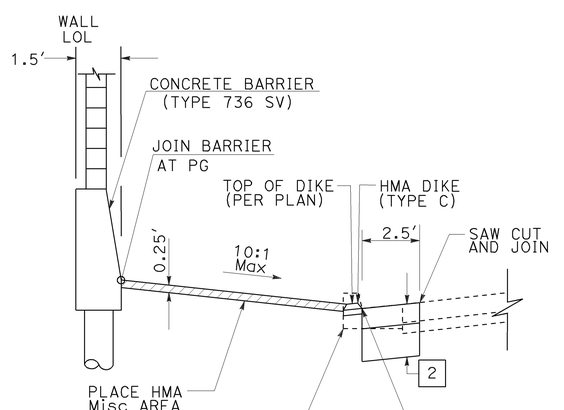

SECTION B-B
NO SCALE

CONSTRUCTION DETAILS

SCALE: 1"=20′

C-1

LAST REVISION DATE PLOTTED => 29-MAR-2009
01-21-09 TIME PLOTTED => 14:30

BORDER LAST REVISED 4/11/2008

RELATIVE BORDER SCALE IS IN INCHES 0 1 2 3

USERNAME => trstrk
DGN FILE => c0g940ga001.dgn

CU 12231

EA 0G9401

Dist	COUNTY	ROUTE	POST MILES TOTAL PROJECT	SHEET No.	TOTAL SHEETS
12	Ora	5	1.3/1.7	14	127

REGISTERED CIVIL ENGINEER — 01-22-09 (DATE)

PLANS APPROVAL DATE — 3-23-09

JOSEPH W. SAWTELLE No. C60110 Exp. 6/30/10 CIVIL — REGISTERED PROFESSIONAL ENGINEER — STATE OF CALIFORNIA

THE STATE OF CALIFORNIA OR ITS OFFICERS OR AGENTS SHALL NOT BE RESPONSIBLE FOR THE ACCURACY OR COMPLETENESS OF ELECTRONIC COPIES OF THIS PLAN SHEET.

ORANGE COUNTY TRANSPORTATION AUTHORITY
550 SOUTH MAIN STREET
ORANGE, CA 92863

RMC, INC.
6 HUTTON CENTRE DRIVE
SUITE 1250
SANTA ANA, CA 92707

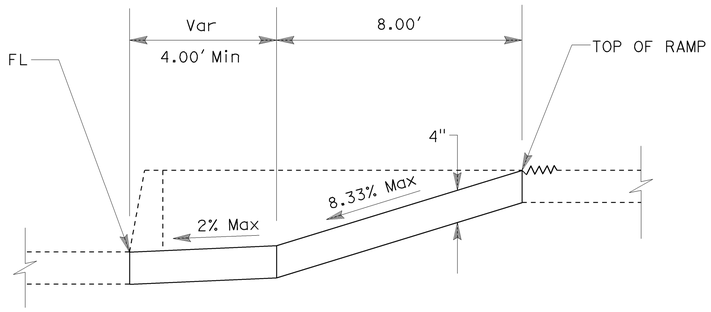

SECTION A-A
NO SCALE

NOTE:

FOR ADDITIONAL DETAILS SEE STANDARD PLAN A88B.

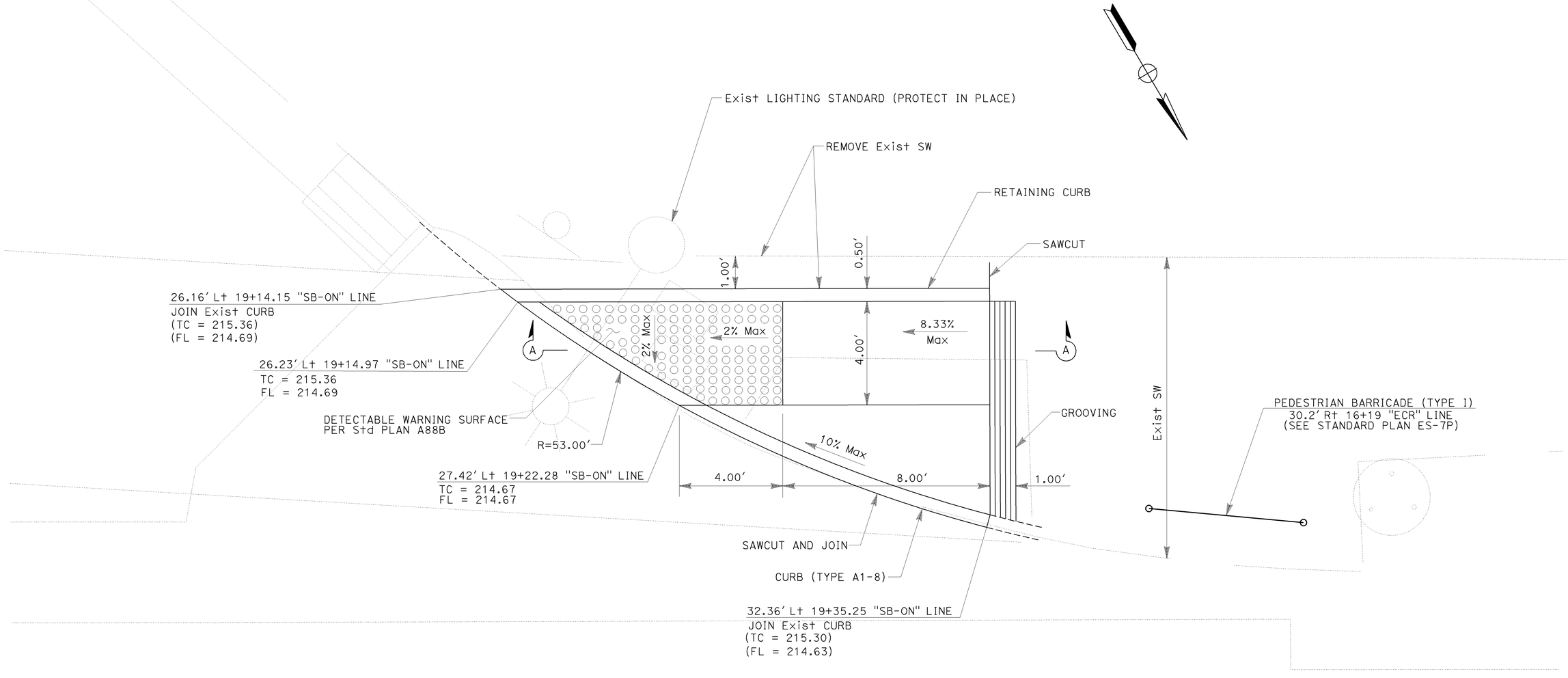

CURB RAMP - CASE CM (MOD)
EL CAMINO REAL / SB ON RAMP - SOUTH WEST RETURN

CONSTRUCTION DETAILS

NO SCALE

C-2

STATE OF CALIFORNIA - DEPARTMENT OF TRANSPORTATION — DESING F
CONSULTANT FUNCTIONAL SUPERVISOR — JAMAL SALMAN
CALCULATED-DESIGNED BY — C. SOSA
CHECKED BY — J. SAWTELLE
REVISED BY
DATE REVISED

LAST REVISION DATE PLOTTED => 29-MAR-2009
TIME PLOTTED => 14:25
01-21-09

BORDER LAST REVISED 3/1/2007
RELATIVE BORDER SCALE IS IN INCHES 0 1 2 3
USERNAME => trstrk
DGN FILE => c0g940ga002.dgn
CU 12231
EA 0G9401

Dist	COUNTY	ROUTE	POST MILES TOTAL PROJECT	SHEET No.	TOTAL SHEETS
12	Ora	5	1.3/1.7	15	127

Joseph W. Sawtelle 01-22-09
REGISTERED CIVIL ENGINEER DATE

JOSEPH W. SAWTELLE No. C60110 Exp. 6/30/10 CIVIL — REGISTERED PROFESSIONAL ENGINEER — STATE OF CALIFORNIA

3-23-09
PLANS APPROVAL DATE

THE STATE OF CALIFORNIA OR ITS OFFICERS OR AGENTS SHALL NOT BE RESPONSIBLE FOR THE ACCURACY OR COMPLETENESS OF ELECTRONIC COPIES OF THIS PLAN SHEET.

ORANGE COUNTY
TRANSPORTATION AUTHORITY
550 SOUTH MAIN STREET
ORANGE, CA 92863

RMC, INC.
6 HUTTON CENTRE DRIVE
SUITE 1250
SANTA ANA, CA 92707

NOTE:

FOR ADDITIONAL DETAILS SEE STANDARD PLAN A88A.

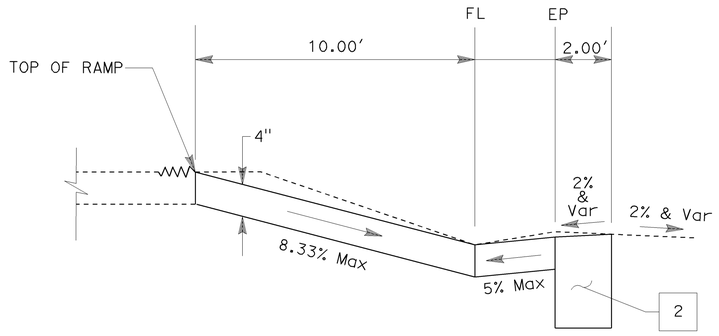

SECTION B-B
NO SCALE

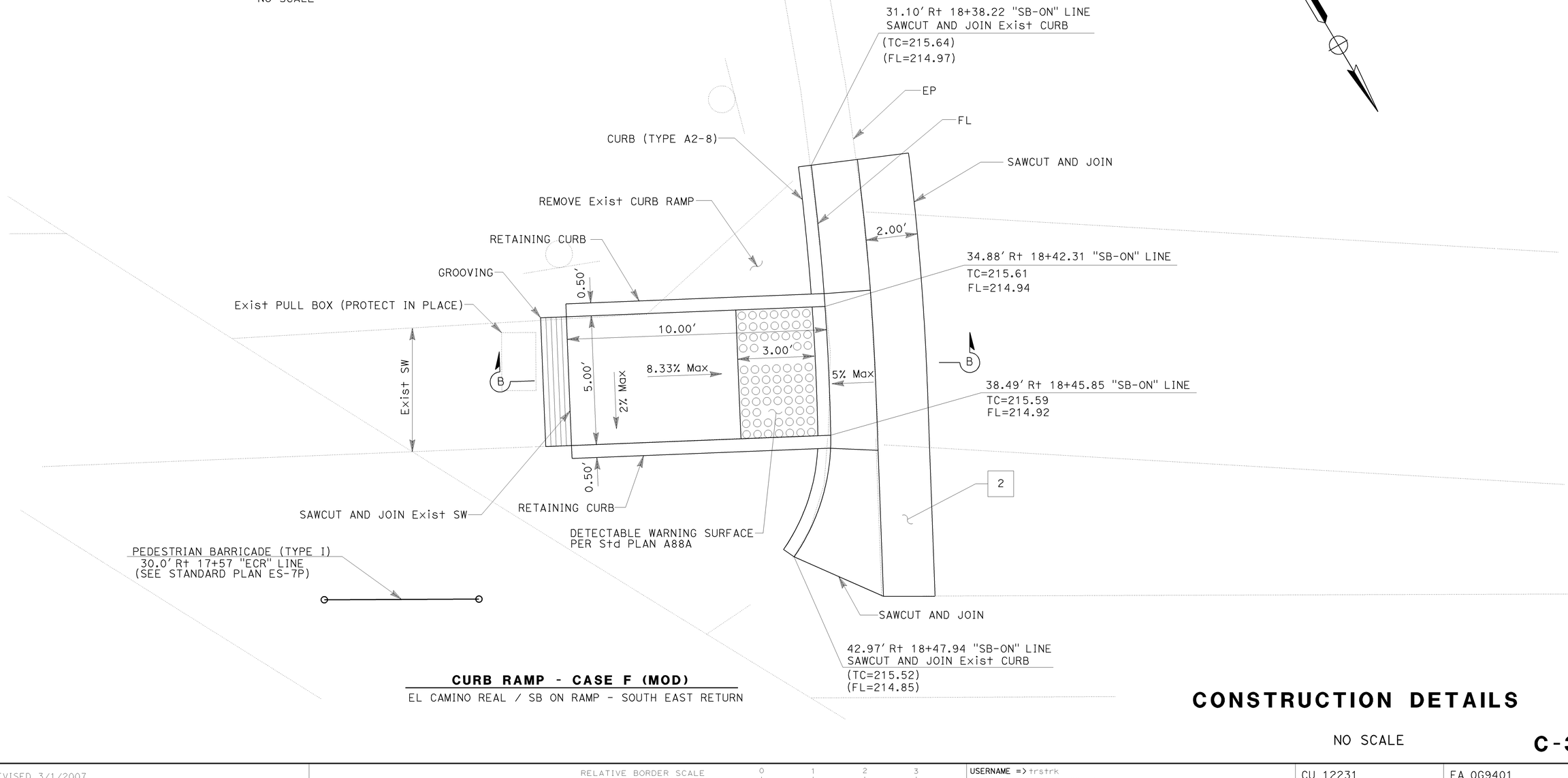

CURB RAMP - CASE F (MOD)
EL CAMINO REAL / SB ON RAMP - SOUTH EAST RETURN

CONSTRUCTION DETAILS

NO SCALE

C-3

LAST REVISION DATE PLOTTED => 29-MAR-2009
01-21-09 TIME PLOTTED => 14:25

STATE OF CALIFORNIA - DEPARTMENT OF TRANSPORTATION
DESING F
CONSULTANT FUNCTIONAL SUPERVISOR: JAMAL SALMAN
CALCULATED-DESIGNED BY: C. SOSA
CHECKED BY: J. SAWTELLE
DRAWN BY
REVISED BY
DATE REVISED

BORDER LAST REVISED 3/1/2007

RELATIVE BORDER SCALE IS IN INCHES 0 1 2 3

USERNAME => trstrk
DGN FILE => c0g940ga003.dgn

CU 12231

EA 0G9401

Dist	COUNTY	ROUTE	POST MILES TOTAL PROJECT	SHEET No.	TOTAL SHEETS
12	Ora	5	1.3/1.7	16	127

Joseph W. Sawtelle 01-22-09
REGISTERED CIVIL ENGINEER DATE

3-23-09
PLANS APPROVAL DATE

REGISTERED PROFESSIONAL ENGINEER
JOSEPH W. SAWTELLE
No. C 60110
Exp. 6/30/10
CIVIL
STATE OF CALIFORNIA

THE STATE OF CALIFORNIA OR ITS OFFICERS OR AGENTS SHALL NOT BE RESPONSIBLE FOR THE ACCURACY OR COMPLETENESS OF SCANNED COPIES OF THIS PLAN SHEET.

ORANGE COUNTY
TRANSPORTATION AUTHORITY
550 SOUTH MAIN STREET
ORANGE, CA 92863

RMC, INC.
6 HUTTON CENTRE DRIVE
SUITE 1250
SANTA ANA, CA 92707

NOTES:

1. THE EXISTENCE AND LOCATION OF ANY UNDERGROUND UTILITY PIPES OR STRUCTURES SHOWN ON THESE PLANS HAVE BEEN OBTAINED BY A SEARCH OF AVAILABLE RECORDS. THE CONTRACTOR IS REQUIRED TO TAKE DUE PRECAUTION, AND ANY MEASURES TO PROTECT THE UTILITIES AND STRUCTURES SHOWN AND ANY OTHER UTILITY(S) OR STRUCTURE(S) NOT OF RECORD OR NOT SHOWN. THE CONTRACTOR IS RESPONSIBLE FOR THE PROTECTION OF, AND REPAIR OF ANY DAMAGE TO ANY UTILITY(S) AND/OR STRUCTURE(S).
2. ALL UTILITY LOCATIONS ARE APPROXIMATE AND ARE BASED ON AVAILABLE RECORD DRAWINGS.
3. FOR COMPLETE RIGHT OF WAY AND ACCURATE ACCESS DATA, SEE RIGHT OF WAY RECORD MAPS AT DISTRICT OFFICE.

ABBREVIATIONS:

HP	HIGH PRESSURE
ACP	ASBESTOS CEMENT PIPE
[HR]	HIGH RISK FACILITY

LEGEND:

——w——	EXISTING WATER
——s——	EXISTING SEWER
——g——	EXISTING GAS
——e—(oh)——	EXISTING OVERHEAD ELECTRICAL
—fo—— ——–	EXISTING FIBER OPTICS
——--t———	EXISTING TELEPHONE (UG)
●	UTILITY POT HOLE LOCATION
X	POT HOLE NUMBER (SEE TABLE)

UTILITY OWNERSHIP ON THIS PROJECT:

SDG&E	SAN DIEGO GAS & ELECTRIC
SCG	SOUTHERN CALIFORNIA GAS
COX	COX COMMUNICATIONS
SCWD	SOUTH COAST WATER DISTRICT
AT&T	AMERICAN TELEPHONE AND TELEGRAPH

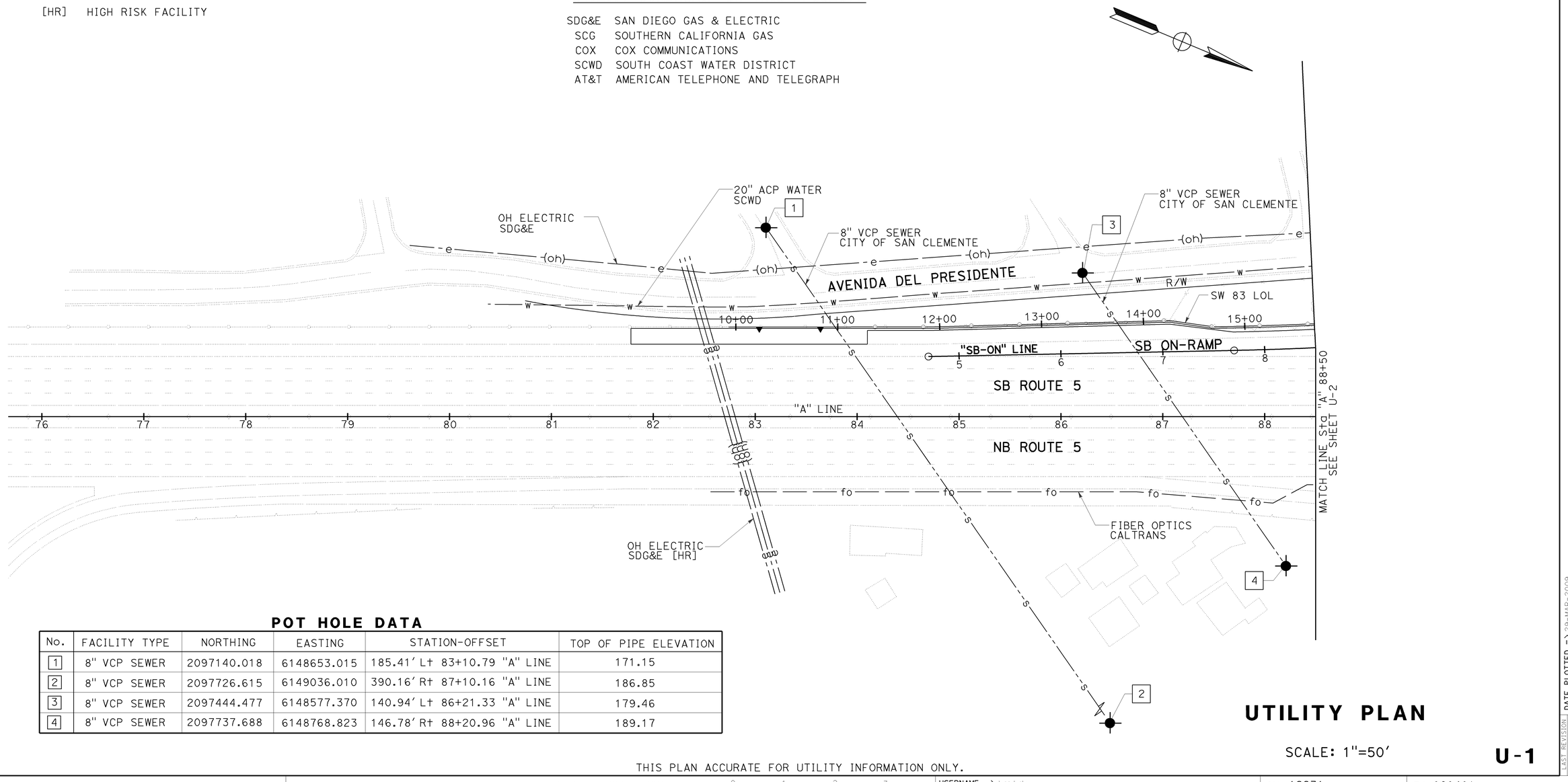

POT HOLE DATA

No.	FACILITY TYPE	NORTHING	EASTING	STATION-OFFSET	TOP OF PIPE ELEVATION
1	8" VCP SEWER	2097140.018	6148653.015	185.41′ Lt 83+10.79 "A" LINE	171.15
2	8" VCP SEWER	2097726.615	6149036.010	390.16′ Rt 87+10.16 "A" LINE	186.85
3	8" VCP SEWER	2097444.477	6148577.370	140.94′ Lt 86+21.33 "A" LINE	179.46
4	8" VCP SEWER	2097737.688	6148768.823	146.78′ Rt 88+20.96 "A" LINE	189.17

UTILITY PLAN

SCALE: 1"=50′

U-1

THIS PLAN ACCURATE FOR UTILITY INFORMATION ONLY.

CALCULATED-DESIGNED BY C. SOSA
CHECKED BY J. SAWTELLE
REVISED BY
DATE REVISED
CONSULTANT FUNCTIONAL SUPERVISOR JAMAL SALMAN
STATE OF CALIFORNIA - DEPARTMENT OF TRANSPORTATION
DESIGN F
Caltrans

LAST REVISION DATE PLOTTED => 29-MAR-2009
01-21-09 TIME PLOTTED => 14:25

BORDER LAST REVISED 4/11/2008
RELATIVE BORDER SCALE IS IN INCHES 0 1 2 3
USERNAME => trstrk
DGN FILE => c0g940ka001.dgn
CU 12231
EA 0G9401

NOTE:

FOR COMPLETE RIGHT OF WAY AND ACCURATE ACCESS DATA,
SEE RIGHT OF WAY RECORD MAPS AT DISTRICT OFFICE.

POT HOLE DATA

No.	FACILITY TYPE	NORTHING	EASTING	STATION-OFFSET	TOP OF PIPE ELEVATION
5	8" VCP SEWER	2097650.639	6148474.663	158.52' Lt 88+50.99 "A" LINE	179.79
6	8" VCP SEWER	2097852.442	6148751.833	174.22' Rt 89+33.67 "A" LINE	191.48
7	12" VCP SEWER	2097835.091	6148294.300	256.22' Lt 90+89.75 "A" LINE	163.51
8	12" VCP SEWER	2098115.070	6148681.001	207.41' Rt 92+03.65 "A" LINE	185.21

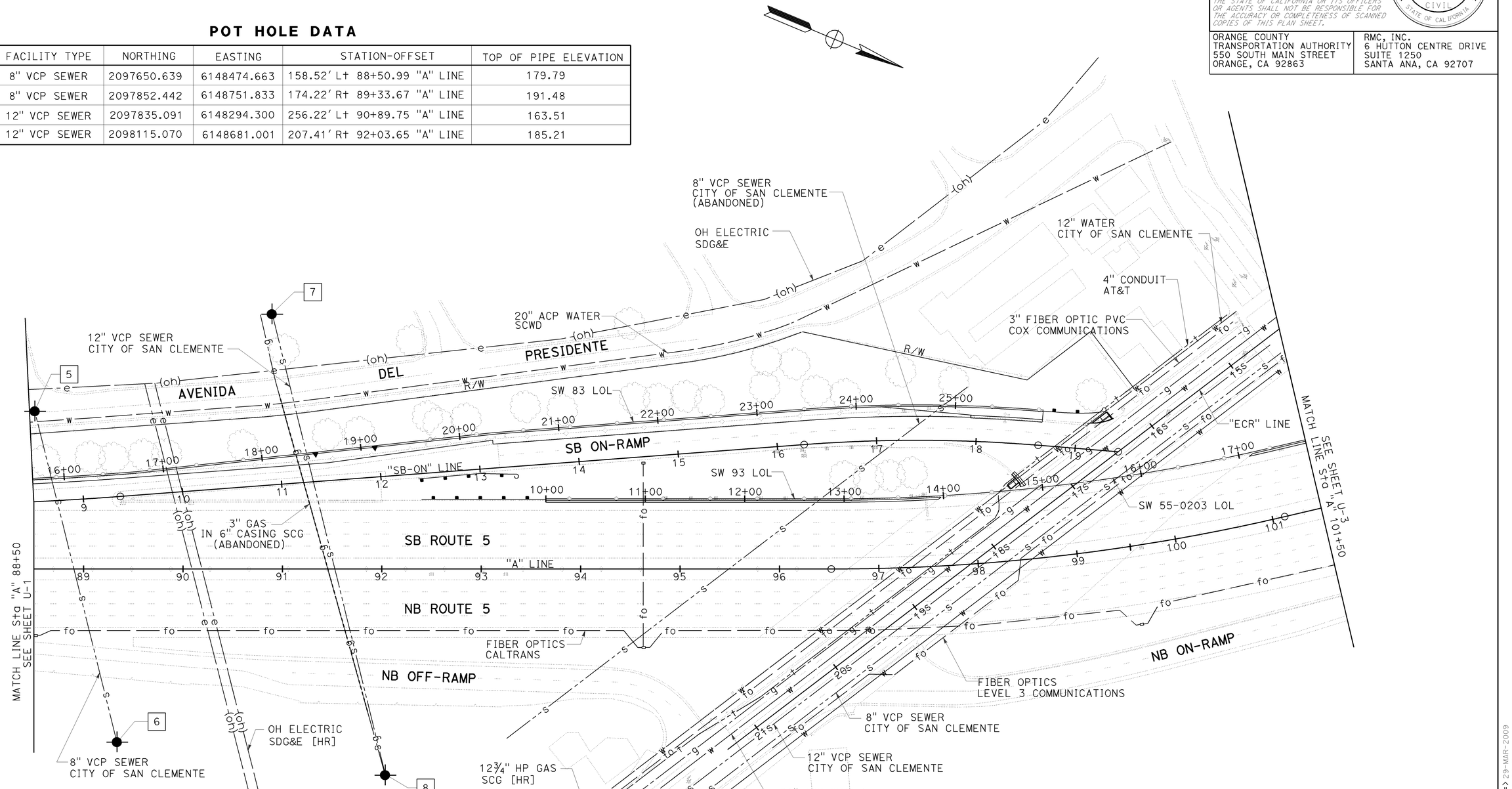

THIS PLAN ACCURATE FOR UTILITY INFORMATION ONLY.

UTILITY PLAN

SCALE: 1"=50'

U-2

Dist	COUNTY	ROUTE	POST MILES TOTAL PROJECT	SHEET No.	TOTAL SHEETS
12	Ora	5	1.3/1.7	17	127

Joseph W. Sawtelle 01-22-09
REGISTERED CIVIL ENGINEER DATE

JOSEPH W. SAWTELLE No. C 60110 Exp. 6/30/10 CIVIL — REGISTERED PROFESSIONAL ENGINEER — STATE OF CALIFORNIA

3-23-09
PLANS APPROVAL DATE

THE STATE OF CALIFORNIA OR ITS OFFICERS OR AGENTS SHALL NOT BE RESPONSIBLE FOR THE ACCURACY OR COMPLETENESS OF SCANNED COPIES OF THIS PLAN SHEET.

ORANGE COUNTY
TRANSPORTATION AUTHORITY
550 SOUTH MAIN STREET
ORANGE, CA 92863

RMC, INC.
6 HUTTON CENTRE DRIVE
SUITE 1250
SANTA ANA, CA 92707

CALCULATED-DESIGNED BY: C. SOSA
CHECKED BY: J. SAWTELLE
CONSULTANT FUNCTIONAL SUPERVISOR: JAMAL SALMAN
STATE OF CALIFORNIA - DEPARTMENT OF TRANSPORTATION
DESIGN F

REVISED BY | DATE REVISED

LAST REVISION | DATE PLOTTED => 29-MAR-2009
01-21-09 | TIME PLOTTED => 14:25

BORDER LAST REVISED 4/11/2008

RELATIVE BORDER SCALE IS IN INCHES 0 1 2 3

USERNAME => trstrk
DGN FILE => c0g940ka002.dgn

CU 12231

EA 0G9401

Dist	COUNTY	ROUTE	POST MILES TOTAL PROJECT	SHEET No.	TOTAL SHEETS
12	Ora	5	1.3/1.7	18	127

Joseph W. Sawtelle 01-22-09
REGISTERED CIVIL ENGINEER DATE

3-23-09
PLANS APPROVAL DATE

REGISTERED PROFESSIONAL ENGINEER
JOSEPH W. SAWTELLE
No. C 60110
Exp. 6/30/10
CIVIL
STATE OF CALIFORNIA

THE STATE OF CALIFORNIA OR ITS OFFICERS OR AGENTS SHALL NOT BE RESPONSIBLE FOR THE ACCURACY OR COMPLETENESS OF SCANNED COPIES OF THIS PLAN SHEET.

ORANGE COUNTY
TRANSPORTATION AUTHORITY
550 SOUTH MAIN STREET
ORANGE, CA 92863

RMC, INC.
6 HUTTON CENTRE DRIVE
SUITE 1250
SANTA ANA, CA 92707

NOTE:

FOR COMPLETE RIGHT OF WAY AND ACCURATE ACCESS DATA, SEE RIGHT OF WAY RECORD MAPS AT DISTRICT OFFICE.

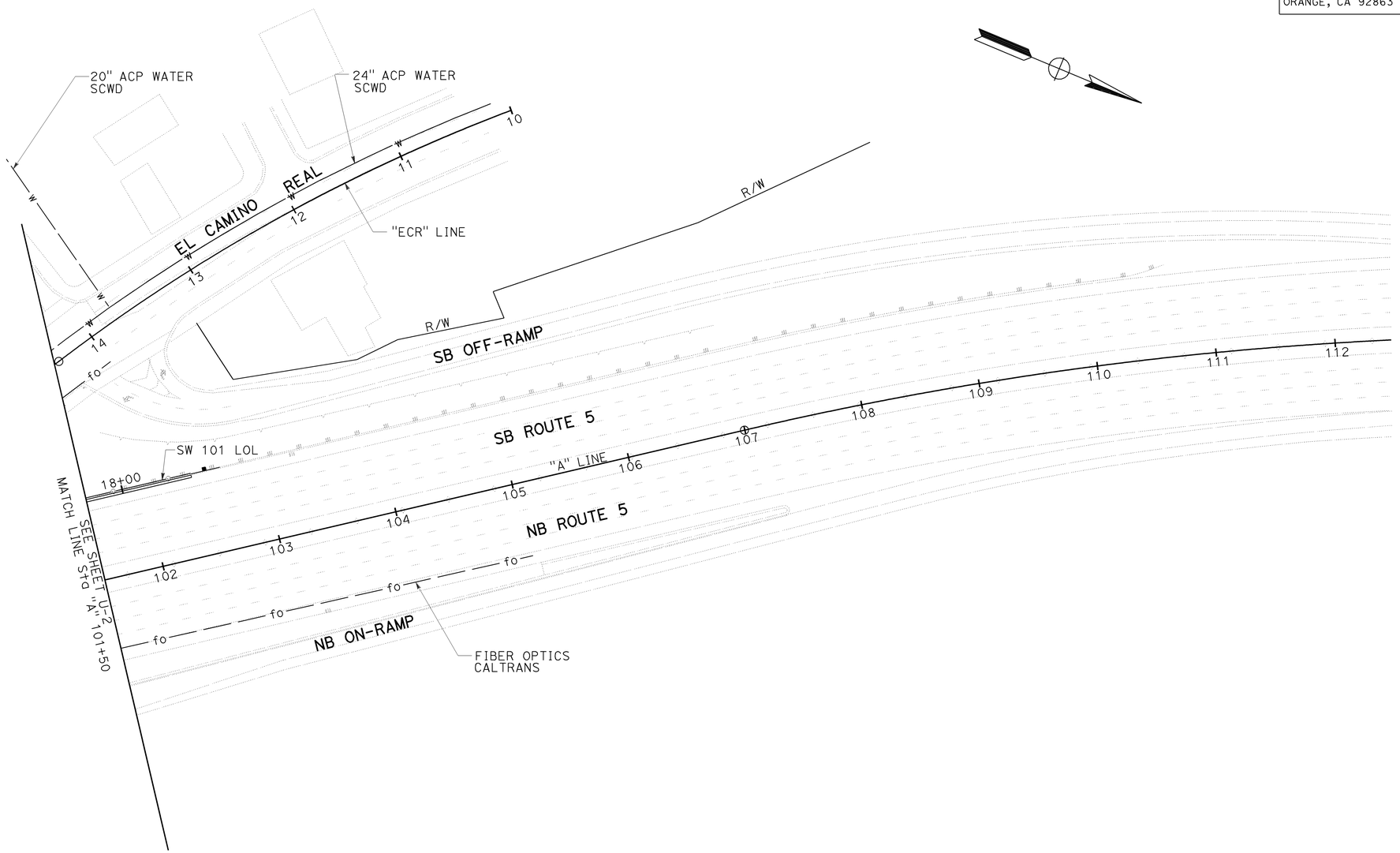

THIS PLAN ACCURATE FOR UTILITY INFORMATION ONLY.

UTILITY PLAN

SCALE: 1"=50'

U-3

STATE OF CALIFORNIA - DEPARTMENT OF TRANSPORTATION
DESIGN F
CONSULTANT FUNCTIONAL SUPERVISOR: JAMAL SALMAN
CALCULATED-DESIGNED BY: J. SAWTELLE
CHECKED BY: C. SOSA
REVISED BY
DATE REVISED

LAST REVISION DATE PLOTTED => 29-MAR-2009
TIME PLOTTED => 14:25
01-21-09

BORDER LAST REVISED 4/11/2008
RELATIVE BORDER SCALE IS IN INCHES 0 1 2 3
USERNAME => trstrk
DGN FILE => c0g940ka003.dgn
CU 12231
EA 0G9401

Dist	COUNTY	ROUTE	POST MILES TOTAL PROJECT	SHEET No.	TOTAL SHEETS
12	Ora	5	1.3/1.7	19	127

Joseph W. Sawtelle 01-22-09
REGISTERED CIVIL ENGINEER DATE

3-23-09
PLANS APPROVAL DATE

REGISTERED PROFESSIONAL ENGINEER — JOSEPH W. SAWTELLE — No. C 60110 — Exp. 6/30/10 — CIVIL — STATE OF CALIFORNIA

THE STATE OF CALIFORNIA OR ITS OFFICERS OR AGENTS SHALL NOT BE RESPONSIBLE FOR THE ACCURACY OR COMPLETENESS OF SCANNED COPIES OF THIS PLAN SHEET.

ORANGE COUNTY
TRANSPORTATION AUTHORITY
550 SOUTH MAIN STREET
ORANGE, CA 92863

RMC, INC.
6 HUTTON CENTRE DRIVE
SUITE 1250
SANTA ANA, CA 92707

STATIONARY MOUNTED - CONSTRUCTION AREA SIGNS

SIGN ID	SIGN CODE	PANEL SIZE	DESCRIPTION	"C" DIM.	WOOD POST LENGTH			NO. OF POSTS		SIGN QUANTITY
					4" X 4"	4" X 6"	6" X 6"	ONE POST	TWO POST	
(A)	W20-1	48" X 48"	ROAD WORK AHEAD	7'		15'-6"		X		3
(B)	C40 (CA)	144" X 60"	TRAFFIC FINES DOUBLED IN CONSTRUCTION ZONES	7'			17'-0"		X	1
(C)	C40 (CA)	108" X 42"	TRAFFIC FINES DOUBLED IN CONSTRUCTION ZONES	7'		15'-0"			X	2
(D)	G20-2	48" X 24"	END ROAD WORK	7'	12'-6"			X		1
(E)	G20-2	36" X 18"	END ROAD WORK	7'	12'-0"			X		2

NOTES:

1. LOCATIONS OF CONSTRUCTION AREA SIGNS ARE APPROXIMATE. EXACT LOCATIONS ARE TO BE DETERMINED BY THE ENGINEER.
2. CONSTRUCTION AREA SIGNS SHALL BE LOCATED APPROXIMATELY 100 FEET AWAY FROM THE INTERSECTIONS.

LEGEND:

(A) CONSTRUCTION AREA SIGN
CONSTRUCTION AREA SIGN, 1 POST
CONSTRUCTION AREA SIGN, 2 POST

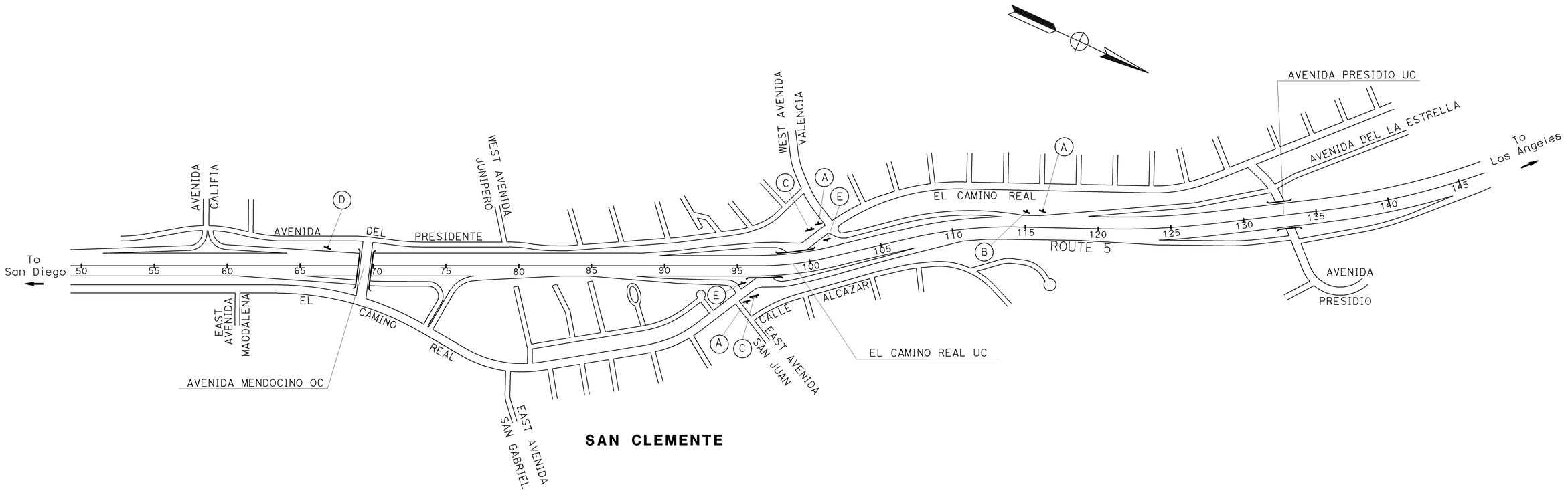

CONSTRUCTION AREA SIGNS

NO SCALE

CS-1

THIS PLAN ACCURATE FOR CONSTRUCTION AREA SIGNS ONLY.

STATE OF CALIFORNIA - DEPARTMENT OF TRANSPORTATION
Caltrans
DESIGN F
CONSULTANT FUNCTIONAL SUPERVISOR: JAMAL SALMAN
CALCULATED-DESIGNED BY: J. SAWTELLE
CHECKED BY: C. SOSA
REVISED BY | DATE REVISED

LAST REVISION: DATE PLOTTED => 29-MAR-2009; TIME PLOTTED => 14:25; 01-21-09

BORDER LAST REVISED 4/11/2008
RELATIVE BORDER SCALE IS IN INCHES 0 1 2 3
USERNAME => trstrk
DGN FILE => c0g9401a001.dgn
CU 12231
EA 0G9401

CONSTRUCTION NOTES:

1. REMOVE EXISTING SOUNDWALL ON RETAINING WALL, SOUNDWALL ON BARRIER, OR CONCRETE BARRIER.
2. REMOVE EXISTING PAVEMENT AND COLD PLANE WHERE SHOWN ON LAYOUT SHEETS.
3. CONSTRUCT SW No. 83 (SOUNDWALL ON RETAINING WALL AND SOUNDWALL ON BARRIER).
4. CONSTRUCT BRIDGE WIDENING AND SW No. 55-0203 ON BRIDGE.
5. CONSTRUCT SW No. 93 (SOUNDWALL ON BARRIER).
6. CONSTRUCT SW No. 101 (SOUNDWALL ON BARRIER).
7. CONSTRUCT SHOULDER PAVEMENT.
8. CONTRACTOR STAGING AREA.

LEGEND:

- CONSTRUCTION LOCATION
- BRIDGE WORK LOCATION
- (X) → NUMBER OF LANES AND DIRECTION OF TRAVEL
- 1 CONSTRUCTION FEATURE
- /1/ TRAFFIC HANDLING

TRAFFIC HANDLING NOTES:

/1/ RESTRIPE EXISTING SB ROUTE 5. REDUCE LANE WIDTHS AS SHOWN ON PLANS, AND SHIFT SB ROUTE 5 TRAFFIC.

/2/ REDUCE SB ON-RAMP TO ONE LANE AND RE-STRIPE AS SHOWN ON PLANS.

/3/ INSTALL TEMPORARY RAILING (TYPE K), CRASH CUSHION MODULES, AND CHANNELIZERS, AS SHOWN.

Dist	COUNTY	ROUTE	POST MILES TOTAL PROJECT	SHEET No.	TOTAL SHEETS
12	Ora	5	1.3/1.7	20	127

Joseph W. Sawtelle 01-22-09
REGISTERED CIVIL ENGINEER DATE

3-23-09
PLANS APPROVAL DATE

REGISTERED PROFESSIONAL ENGINEER — JOSEPH W. SAWTELLE — No. C 60110 — Exp. 6/30/10 — CIVIL — STATE OF CALIFORNIA

THE STATE OF CALIFORNIA OR ITS OFFICERS OR AGENTS SHALL NOT BE RESPONSIBLE FOR THE ACCURACY OR COMPLETENESS OF SCANNED COPIES OF THIS PLAN SHEET.

ORANGE COUNTY TRANSPORTATION AUTHORITY
550 SOUTH MAIN STREET
ORANGE, CA 92863

RMC, INC.
6 HUTTON CENTRE DRIVE
SUITE 1250
SANTA ANA, CA 92707

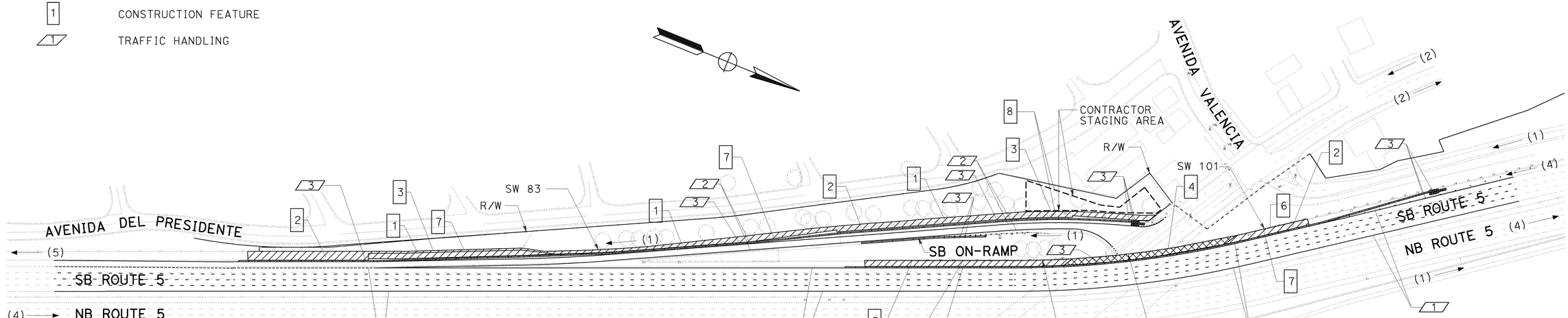

STAGE CONSTRUCTION INDEX

SCALE: 1"=100'

SC-1

THIS PLAN ACCURATE FOR STAGE CONSTRUCTION TRAFFIC HANDLING WORK ONLY.

REVISED BY | DATE REVISED
C. SOSA | J. SAWTELLE
CALCULATED-DESIGNED BY | CHECKED BY
CONSULTANT FUNCTIONAL SUPERVISOR: JAMAL SALMAN
STATE OF CALIFORNIA - DEPARTMENT OF TRANSPORTATION
Caltrans®
DESIGN F

LAST REVISION | DATE PLOTTED => 29-MAR-2009
01-21-09 | TIME PLOTTED => 14:25

BORDER LAST REVISED 4/11/2008
RELATIVE BORDER SCALE IS IN INCHES 0 1 2 3
USERNAME => trstrk
DGN FILE => c0g940ma001.dgn
CU 12231
EA 0G9401

Dist	COUNTY	ROUTE	POST MILES TOTAL PROJECT	SHEET No.	TOTAL SHEETS
12	Ora	5	1.3/1.7	21	127

Joseph W. Sawtelle 01-22-09
REGISTERED CIVIL ENGINEER DATE

3-23-09
PLANS APPROVAL DATE

REGISTERED PROFESSIONAL ENGINEER — JOSEPH W. SAWTELLE — No. C 60110 — Exp. 6/30/10 — CIVIL — STATE OF CALIFORNIA

THE STATE OF CALIFORNIA OR ITS OFFICERS OR AGENTS SHALL NOT BE RESPONSIBLE FOR THE ACCURACY OR COMPLETENESS OF SCANNED COPIES OF THIS PLAN SHEET.

ORANGE COUNTY
TRANSPORTATION AUTHORITY
550 SOUTH MAIN STREET
ORANGE, CA 92863

RMC, INC.
6 HUTTON CENTRE DRIVE
SUITE 1250
SANTA ANA, CA 92707

NOTE:

1. FOR CONSTRUCTION NOTES AND TRAFFIC HANDLING NOTES SEE SHEET SC-1.
2. TEMPORARY RAILING (TYPE K) OFFSET LOCATIONS ON LAYOUT ARE MEASURED TO THE FACE OF BARRIER ADJACENT TO TRAFFIC.

LEGEND

- (No.) — PAVEMENT DELINEATION (PD) DETAIL PAINT TRAFFIC STRIPE (2 COAT)
- NUMBER OF LANES AND DIRECTION OF TRAVEL
- TEMPORARY RAILING (TYPE K)
- CHANNELIZERS (SURFACE MOUNTED)
- TEMPORARY CRASH CUSHION (ARRAY PER PLAN)
- CONSTRUCTION AREA
- BRIDGE WORK
- TEMPORARY RAILING (TYPE K) PROFILE VIEW
- CHANGE IN PAVEMENT DELINEATION DETAIL

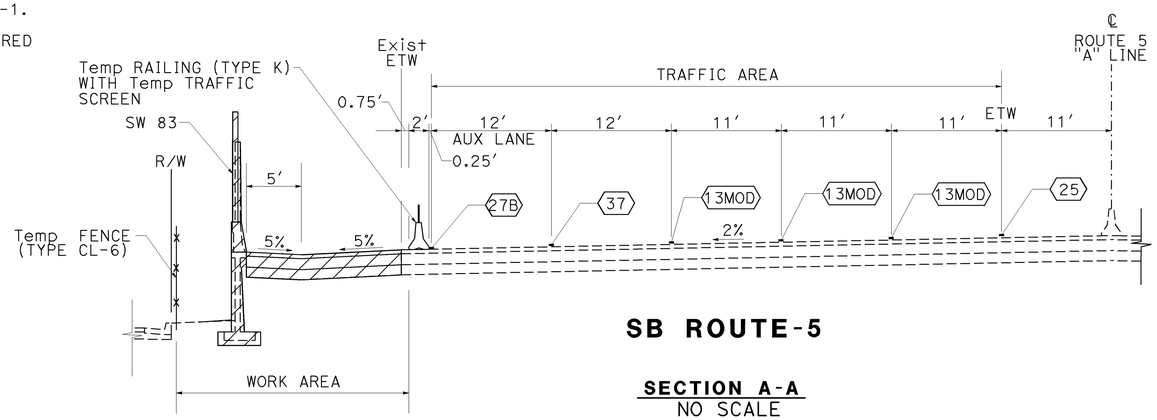

SB ROUTE-5

SECTION A-A
NO SCALE

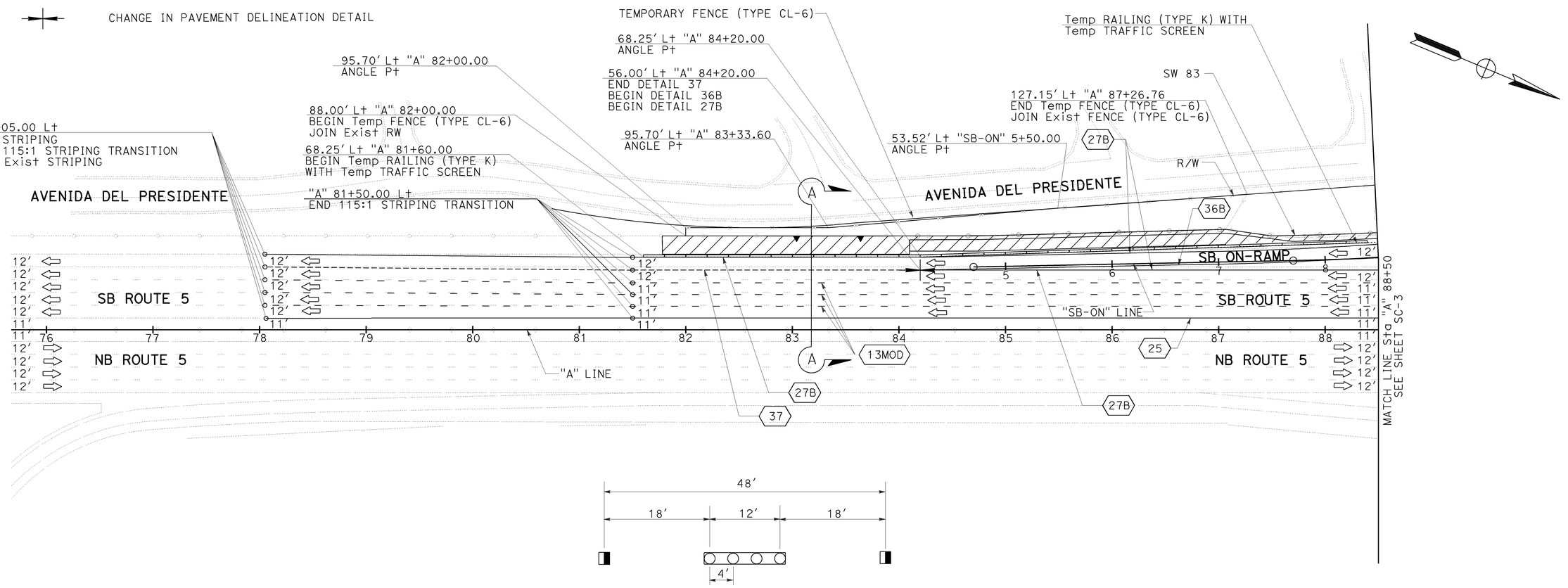

DETAIL 13 MOD
NO SCALE

STAGE CONSTRUCTION TRAFFIC HANDLING PLANS

SCALE: 1"=50′

SC-2

THIS PLAN ACCURATE FOR STAGE CONSTRUCTION TRAFFIC HANDLING WORK ONLY.

CALCULATED-DESIGNED BY: C. SOSA
CHECKED BY: J. SAWTELLE
REVISED BY
DATE REVISED
CONSULTANT FUNCTIONAL SUPERVISOR: JAMAL SALMAN
STATE OF CALIFORNIA - DEPARTMENT OF TRANSPORTATION
DESIGN F
Caltrans

LAST REVISION DATE PLOTTED => 06-APR-2009
TIME PLOTTED => 15:00
01-21-09

BORDER LAST REVISED 4/11/2008
RELATIVE BORDER SCALE IS IN INCHES 0 1 2 3
USERNAME => trpierce
DGN FILE => c0g940ma002.dgn
CU 12231
EA 0G9401

Dist	COUNTY	ROUTE	POST MILES TOTAL PROJECT	SHEET No.	TOTAL SHEETS
12	Ora	5	1.3/1.7	22	127

Joseph W. Sawtelle 01-22-09
REGISTERED CIVIL ENGINEER DATE

JOSEPH W. SAWTELLE No. C 60110 Exp. 6/30/10 CIVIL — REGISTERED PROFESSIONAL ENGINEER — STATE OF CALIFORNIA

3-23-09
PLANS APPROVAL DATE

THE STATE OF CALIFORNIA OR ITS OFFICERS OR AGENTS SHALL NOT BE RESPONSIBLE FOR THE ACCURACY OR COMPLETENESS OF SCANNED COPIES OF THIS PLAN SHEET.

ORANGE COUNTY
TRANSPORTATION AUTHORITY
550 SOUTH MAIN STREET
ORANGE, CA 92863

RMC, INC.
6 HUTTON CENTRE DRIVE
SUITE 1250
SANTA ANA, CA 92707

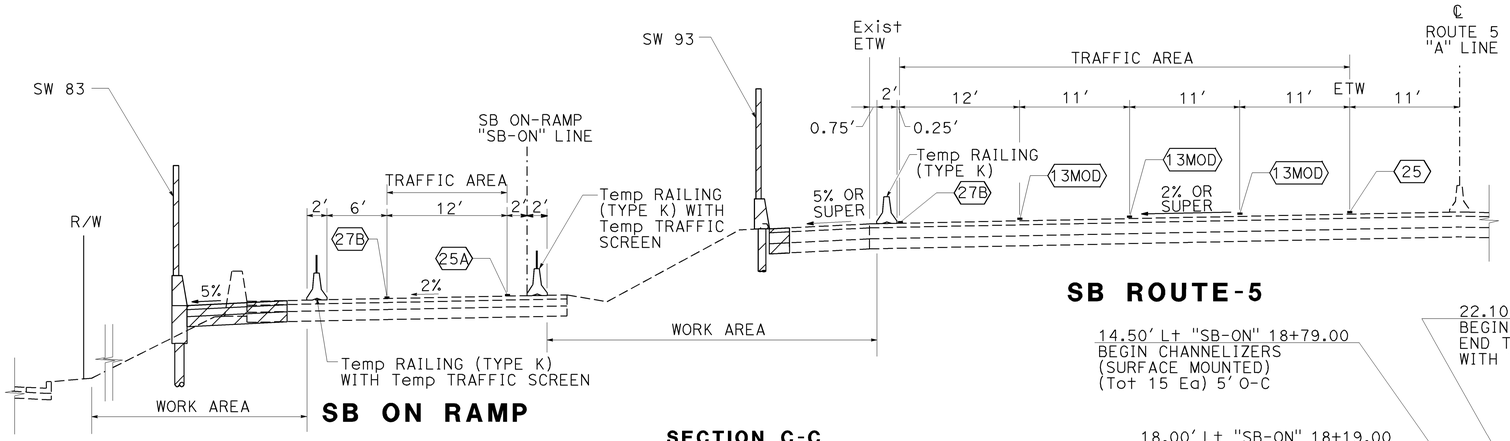

SB ON RAMP

SECTION C-C
NO SCALE

SB ROUTE-5

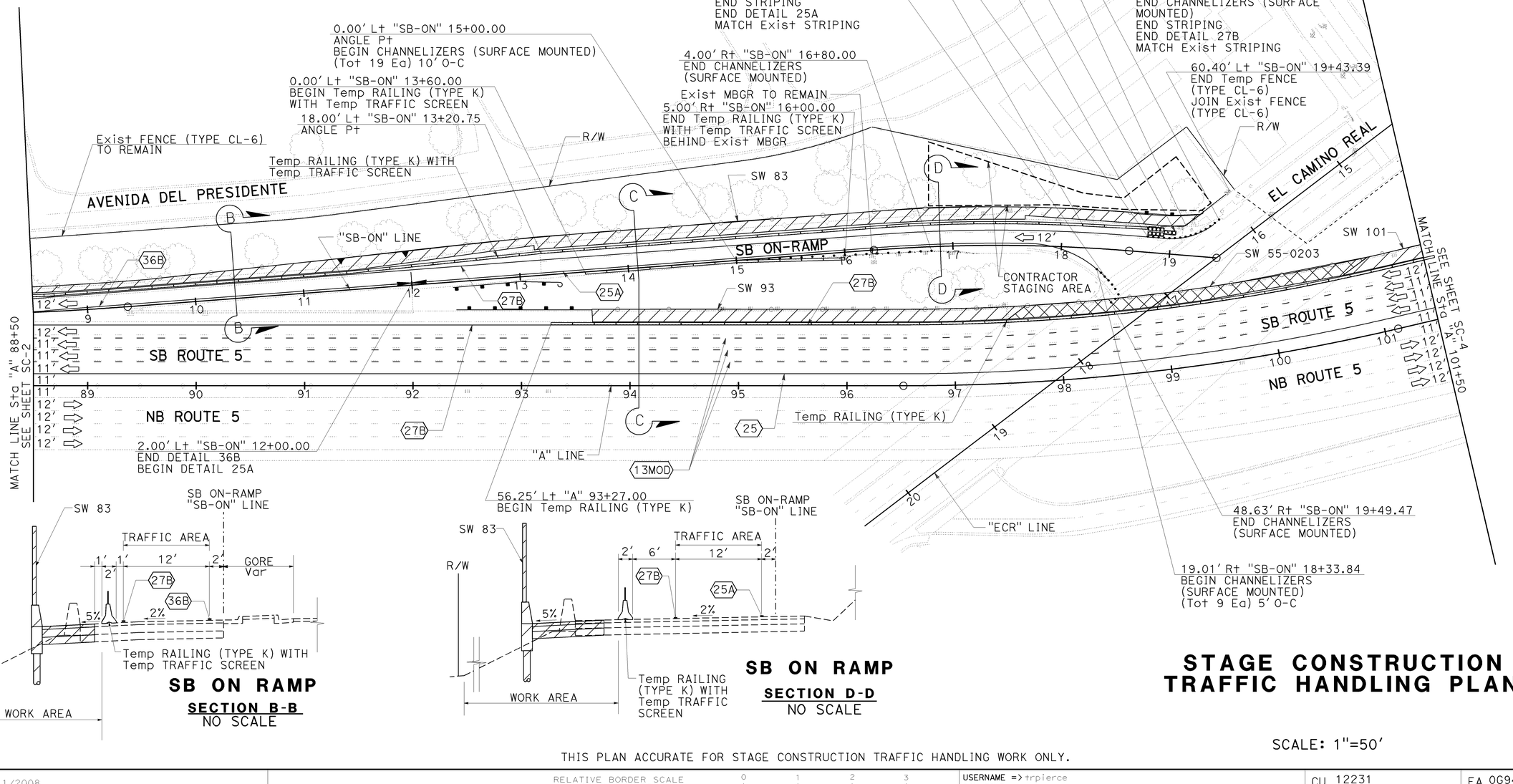

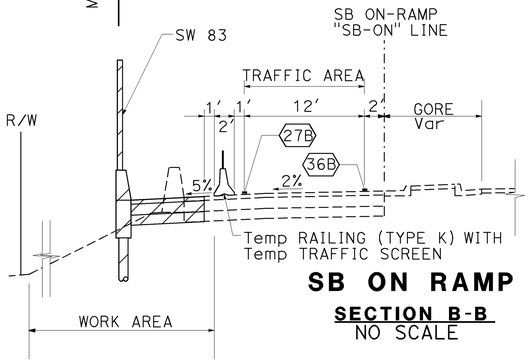

SB ON RAMP

SECTION B-B
NO SCALE

SB ON RAMP

SECTION D-D
NO SCALE

STAGE CONSTRUCTION TRAFFIC HANDLING PLANS

SCALE: 1"=50′

SC-3

THIS PLAN ACCURATE FOR STAGE CONSTRUCTION TRAFFIC HANDLING WORK ONLY.

STATE OF CALIFORNIA - DEPARTMENT OF TRANSPORTATION
DESIGN F
CONSULTANT FUNCTIONAL SUPERVISOR: JAMAL SALMAN
CALCULATED-DESIGNED BY: J. SAWTELLE
CHECKED BY: C. SOSA
REVISED BY
DATE REVISED
Caltrans

LAST REVISION 01-21-09
DATE PLOTTED => 30-MAR-2009
TIME PLOTTED => 08:19

BORDER LAST REVISED 4/11/2008
RELATIVE BORDER SCALE IS IN INCHES 0 1 2 3
USERNAME => trpierce
DGN FILE => c0g940ma003.dgn
CU 12231
EA 0G9401

Dist	COUNTY	ROUTE	POST MILES TOTAL PROJECT	SHEET No.	TOTAL SHEETS
12	Ora	5	1.3/1.7	23	127

Joseph W. Sawtelle 01-22-09
REGISTERED CIVIL ENGINEER DATE

3-23-09
PLANS APPROVAL DATE

REGISTERED PROFESSIONAL ENGINEER
JOSEPH W. SAWTELLE
No. C 60110
Exp. 6/30/10
CIVIL
STATE OF CALIFORNIA

THE STATE OF CALIFORNIA OR ITS OFFICERS OR AGENTS SHALL NOT BE RESPONSIBLE FOR THE ACCURACY OR COMPLETENESS OF SCANNED COPIES OF THIS PLAN SHEET.

ORANGE COUNTY
TRANSPORTATION AUTHORITY
550 SOUTH MAIN STREET
ORANGE, CA 92863

RMC, INC.
6 HUTTON CENTRE DRIVE
SUITE 1250
SANTA ANA, CA 92707

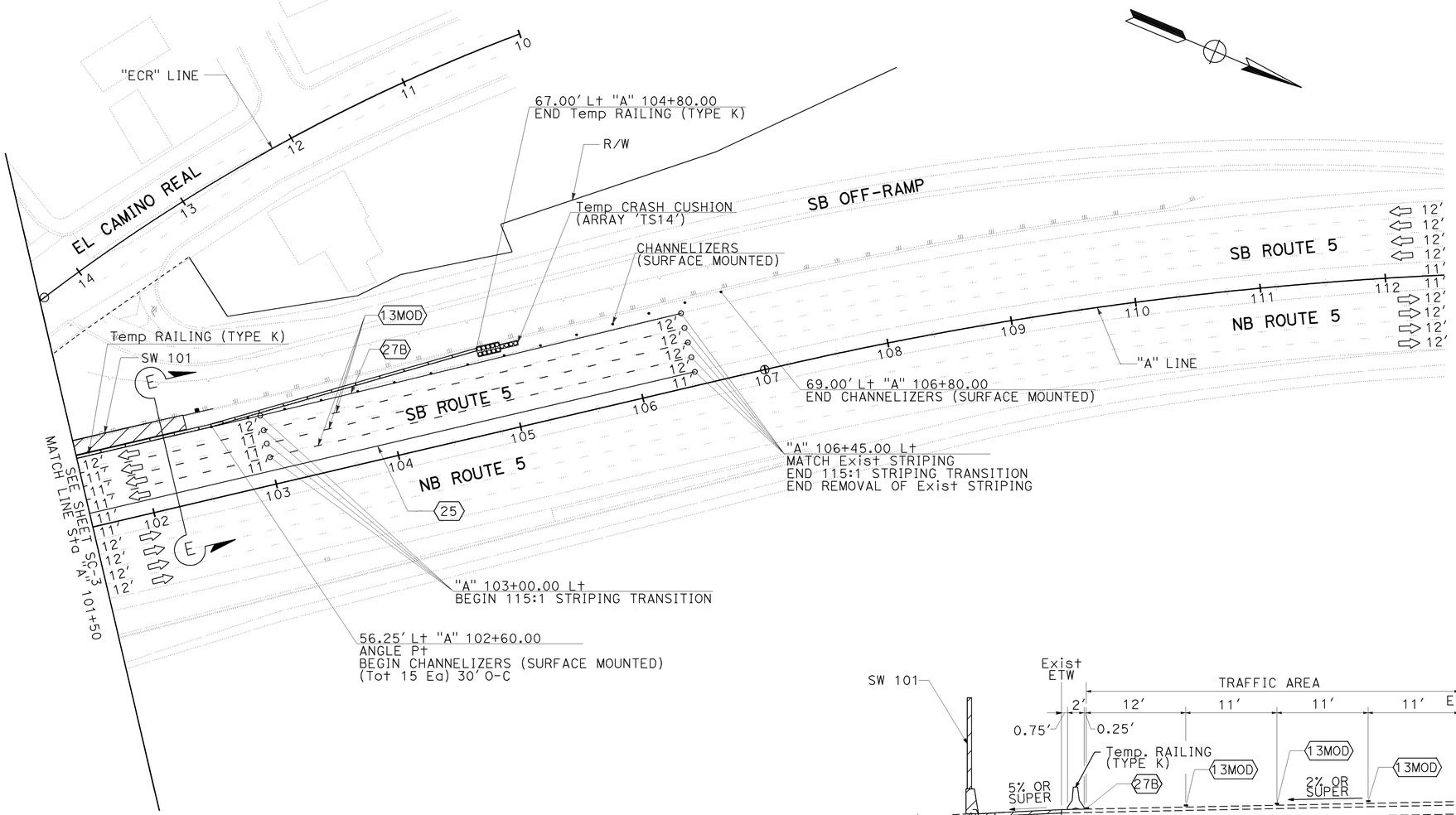

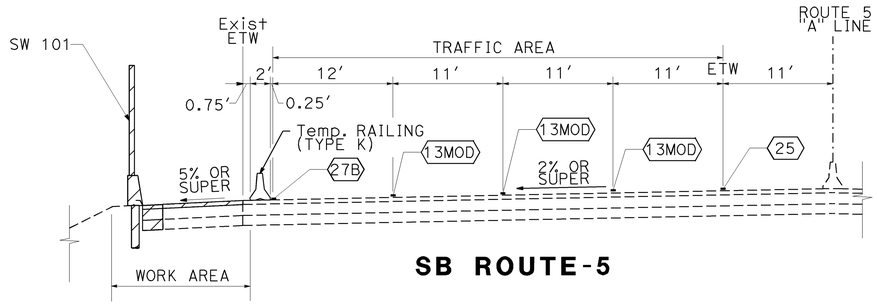

SB ROUTE-5

SECTION E-E
NO SCALE

STAGE CONSTRUCTION INDEX

SCALE: 1"=50'

THIS PLAN ACCURATE FOR STAGE CONSTRUCTION TRAFFIC HANDLING WORK ONLY.

SC-4

STATE OF CALIFORNIA - DEPARTMENT OF TRANSPORTATION
DESIGN F
CONSULTANT FUNCTIONAL SUPERVISOR: JAMAL SALMAN
CALCULATED-DESIGNED BY: J. SAWTELLE
CHECKED BY: C. SOSA
REVISED BY
DATE REVISED

LAST REVISION DATE PLOTTED => 06-APR-2009
TIME PLOTTED => 15:00
01-21-09

BORDER LAST REVISED 4/11/2008
RELATIVE BORDER SCALE IS IN INCHES 0 1 2 3
USERNAME => trpierce
DGN FILE => c0g940ma004.dgn
CU 12231
EA 0G9401

Dist	COUNTY	ROUTE	POST MILES TOTAL PROJECT	SHEET No.	TOTAL SHEETS
12	Ora	5	1.3/1.7	24	127

Joseph W. Sawtelle 01-22-09
REGISTERED CIVIL ENGINEER DATE

3-23-09
PLANS APPROVAL DATE

REGISTERED PROFESSIONAL ENGINEER
JOSEPH W. SAWTELLE
No. C 60110
Exp. 6/30/10
CIVIL
STATE OF CALIFORNIA

THE STATE OF CALIFORNIA OR ITS OFFICERS OR AGENTS SHALL NOT BE RESPONSIBLE FOR THE ACCURACY OR COMPLETENESS OF SCANNED COPIES OF THIS PLAN SHEET.

ORANGE COUNTY
TRANSPORTATION AUTHORITY
550 SOUTH MAIN STREET
ORANGE, CA 92863

RMC, INC.
6 HUTTON CENTRE DRIVE
SUITE 1250
SANTA ANA, CA 92707

STAGE CONSTRUCTION QUANTITIES

SHEET NUMBER	LOCATION	TEMPORARY TRAFFIC STRIPE (PAINT)					TEMPORARY PAVEMENT MARKER				TEMPORARY RAILING (TYPE K)	TEMPORARY TRAFFIC SCREEN	CHANNELIZER (SURFACE MOUNTED)	TEMPORARY FENCE (TYPE CL-6)	TEMPORARY CRASH CUSHION MODULE	REMOVE PAINTED TRAFFIC STRIPE	REMOVE YELLOW THERMOPLASTIC TRAFFIC STRIPE	REMOVE PAVEMENT MARKER
		4"			8"			RETRO REFLECTIVE										
		DETAIL 13 MOD (BROKEN WHITE)	DETAIL 27B (SOLID WHITE)	DETAIL 25, 25A (SOLID YELLOW)	DETAIL 36B (SOLID WHITE)	DETAIL 37 (BROKEN WHITE)	NON-REFLECTIVE TYPE A	TYPE G	TYPE C	TYPE H								
		LF	LF	LF	LF	LF	EA	EA	EA	EA	LF	LF	EA	LF	EA	LF	LF	EA
SC-2	SB ON-RAMP "SB-ON"		430								700	700		536		430		
	SB ON-RAMP "SB-ON"				431					20						431		20
	SB I-5 "A"	3136					264	68								3136		332
	SB I-5 "A"			1044						23							1044	23
	SB I-5 "A"		1045													1045		
	SB I-5 "A"					616			23	2						616		25
SC-3	SB ON-RAMP "SB-ON"			653						30	2100	1270	43	87	11		653	30
	SB ON-RAMP "SB-ON"		1100													1100		
	SB ON-RAMP "SB-ON"				350					17						350		17
	SB I-5 "A"	3878					324	83								3878		407
	SB I-5 "A"			1298						29							1298	29
	SB I-5 "A"		1288													1288		
SC-4	SB I-5 "A"	1486					124	33			340		15		14	1486		157
	SB I-5 "A"			495						11							495	11
	SB I-5 "A"		496													496		
PROJECT SUBTOTAL		8500	4359	3490	781	616	712	184	23	132	3140	1970	58	623	25	14256	3490	1051
PROJECT TOTAL		17746					1051				3140	1970	58	623	25	14256	3490	1051

STAGE CONSTRUCTION TRAFFIC HANDLING QUANTITIES

THIS PLAN ACCURATE FOR STAGE CONSTRUCTION TRAFFIC HANDLING WORK ONLY.

SCQ-1

CALCULATED-DESIGNED BY
CHECKED BY
REVISED BY
DATE REVISED
C. SOSA
J. SAWTELLE
CONSULTANT FUNCTIONAL SUPERVISOR
JAMAL SALMAN
STATE OF CALIFORNIA - DEPARTMENT OF TRANSPORTATION
DESIGN F
Caltrans

LAST REVISION DATE PLOTTED => 30-MAR-2009
TIME PLOTTED => 08:19
01-21-09

BORDER LAST REVISED 4/11/2008
RELATIVE BORDER SCALE IS IN INCHES 0 1 2 3
USERNAME => trpierce
DGN FILE => c0g940mc001.dgn
CU 12231
EA 0G9401

Dist	COUNTY	ROUTE	POST MILES TOTAL PROJECT	SHEET No.	TOTAL SHEETS
12	Ora	5	1.3/1.7	25	127

Joseph W. Sawtelle 01-22-09
REGISTERED CIVIL ENGINEER DATE

3-23-09
PLANS APPROVAL DATE

REGISTERED PROFESSIONAL ENGINEER — JOSEPH W. SAWTELLE — No. C 60110 — Exp. 6/30/10 — CIVIL — STATE OF CALIFORNIA

THE STATE OF CALIFORNIA OR ITS OFFICERS OR AGENTS SHALL NOT BE RESPONSIBLE FOR THE ACCURACY OR COMPLETENESS OF SCANNED COPIES OF THIS PLAN SHEET.

ORANGE COUNTY
TRANSPORTATION AUTHORITY
550 SOUTH MAIN STREET
ORANGE, CA 92863

RMC, INC.
6 HUTTON CENTRE DRIVE
SUITE 1250
SANTA ANA, CA 92707

CONSTRUCTION DETOUR SIGNS

SIGN ID	SIGN CODE	PANEL SIZE (INCHES)	DESCRIPTION	SIGN QUANTITY
(A)	SC3 (CA)	48 X 18	DETOUR (UP ARROW)	4
(B)	M4-10 (RT)	48 X 18	DETOUR (RT ARROW)	1
(C)	M4-10 (LT)	48 X 18	DETOUR (LT ARROW)	3
(D)	SC6-4 (CA)	48 X 60	RAMP TO BE TEMPORARILY CLOSED	1

NOTES:

1. LOCATIONS OF CONSTRUCTION DETOUR SIGNS ARE APPROXIMATE. EXACT LOCATIONS ARE TO BE DETERMINED BY THE ENGINEER.
2. EXACT MESSAGES ON PORTABLE CHANGEABLE MESSAGE SIGNS (PCMS) TO BE DETERMINED BY THE ENGINEER.
3. TYPE OF MOUNTING FOR CONSTRUCTION DETOUR SIGNS TO BE DETERMINED BY THE ENGINEER.
4. RAMP CLOSURE TIMES AND DATES FOR SC6-4 (CA) SIGN TO BE DETERMINED BY THE ENGINEER.

ABBREVIATION:

PCMS: PORTABLE CHANGEABLE MESSAGE SIGN

LEGEND:

(A) CONSTRUCTION DETOUR SIGN

CLOSURE

PCMS-1 PORTABLE CHANGEABLE MESSAGE SIGN

(A) SC3 (CA)

(B) M4-10 (RT)

(C) M4-10 (LT)

(D) SC6-4 (CA)

CLOSURE:

RAMP - EL CAMINO REAL SB ROUTE 5 ON-RAMP

DETOUR FOR WB EL CAMINO:

LEFT ON WEST AVENIDA VALENCIA
LEFT ON AVENIDA DEL PRESIDENTE
CONTINUE ON AVENIDA DEL PRESIDENTE
LEFT ON ROUTE 5 SB-ON RAMP AT AVENIDA CALIFIA

DETOUR FOR EB EL CAMINO:

RIGHT ON WEST AVENIDA VALENCIA
LEFT ON AVENIDA DEL PRESIDENTE
CONTINUE ON AVENIDA DEL PRESIDENTE
LEFT ON ROUTE 5 SB-ON RAMP AT AVENIDA CALIFIA

PORTABLE CHANGEABLE MESSAGE SIGN

PCMS No.	FRAME	SIGN MESSAGE
PCMS-1	1st FRAME	EL CAMINO SB ON RAMP CLOSED
	2nd FRAME	USE DETOUR
PCMS-2	1st FRAME	EL CAMINO SB ON RAMP CLOSED
	2nd FRAME	USE DETOUR

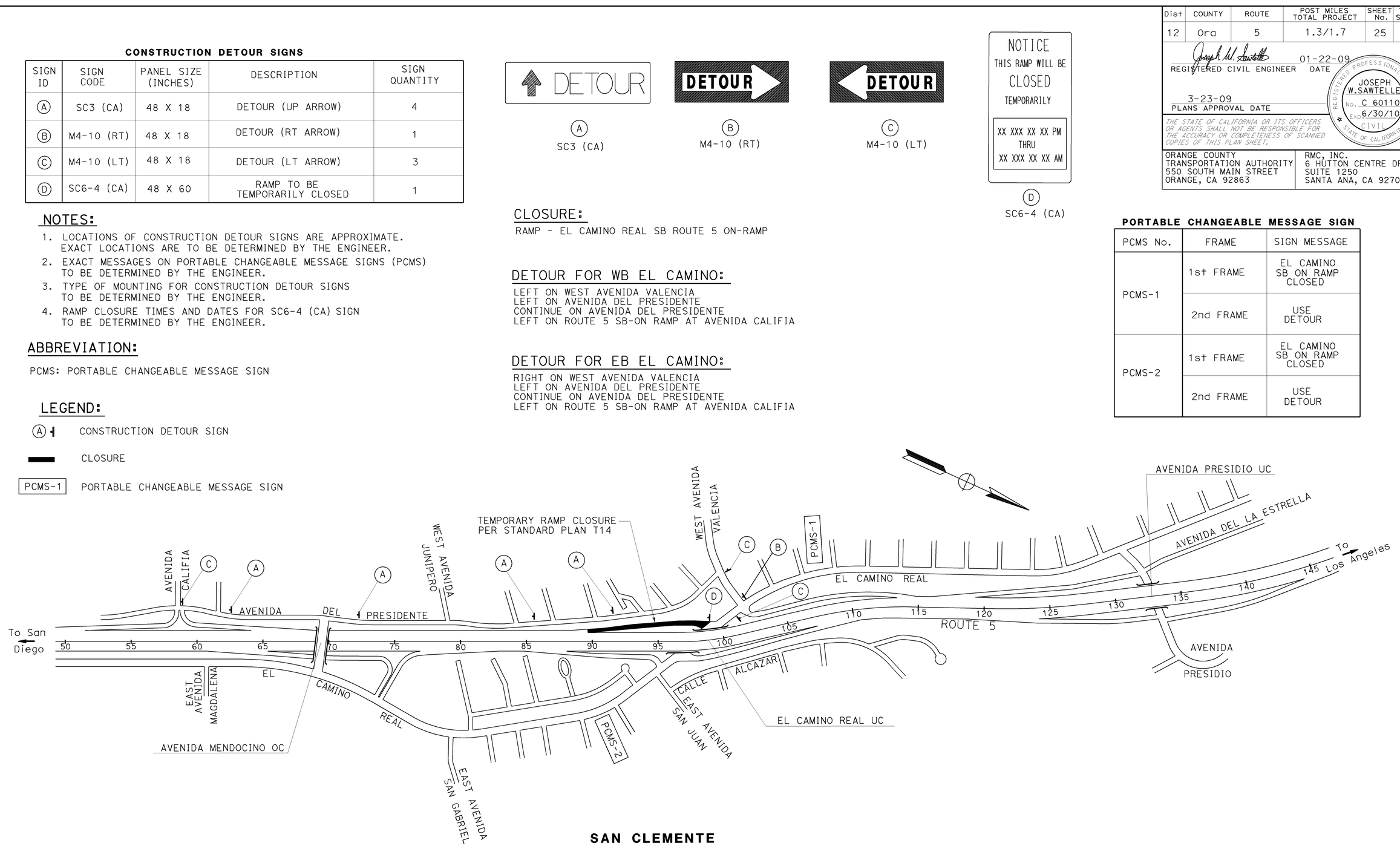

SAN CLEMENTE

THIS PLAN ACCURATE FOR DETOUR SIGNS ONLY.

DETOUR SIGN PLAN

NO SCALE

DE-1

LAST REVISION DATE PLOTTED => 30-MAR-2009
01-21-09 TIME PLOTTED => 08:19

STATE OF CALIFORNIA - DEPARTMENT OF TRANSPORTATION
DESIGN F
CONSULTANT FUNCTIONAL SUPERVISOR: JAMAL SALMAN
CALCULATED-DESIGNED BY: J. SAWTELLE
CHECKED BY: C. SOSA
REVISED BY
DATE REVISED

BORDER LAST REVISED 4/11/2008

RELATIVE BORDER SCALE IS IN INCHES 0 1 2 3

USERNAME => trpierce
DGN FILE => c0g940mg001.dgn

CU 12231

EA 0G9401

Dist	COUNTY	ROUTE	POST MILES TOTAL PROJECT	SHEET No.	TOTAL SHEETS
12	Ora	5	1.3/1.7	26	127

REGISTERED CIVIL ENGINEER — 01-22-09 DATE

3-23-09
PLANS APPROVAL DATE

REGISTERED PROFESSIONAL ENGINEER — HON WAI YOW — No. C43276 — Exp 3/31/10 — CIVIL — STATE OF CALIFORNIA

THE STATE OF CALIFORNIA OR ITS OFFICERS OR AGENTS SHALL NOT BE RESPONSIBLE FOR THE ACCURACY OR COMPLETENESS OF ELECTRONIC COPIES OF THIS PLAN SHEET.

ORANGE COUNTY TRANSPORTATION AUTHORITY
550 SOUTH MAIN STREET
ORANGE, CA 92863

ACT CONSULTING ENGINEERS, INC.
5 CORPORATE PARK, STE 260
IRVINE, CA 92606

LEGEND

- No. — PAVEMENT DELINEATION DETAIL
- CHANGE IN PAVEMENT DELINEATION
- F — DELINEATOR (CLASS 1) TYPE F
- G — DELINEATOR (CLASS 1) TYPE G
- No. — ROADSIDE SIGN (IDENTIFIED BY NUMBER)
- OVERHEAD SIGN (IDENTIFIED BY ALPHABET)
- PROTECT ROADSIDE/OVERHEAD SIGN IN PLACE
- REMOVE AND SALVAGE ROADSIDE SIGN
- RELOCATE ROADSIDE SIGN
- TYPE A PAVEMENT MARKER
- TYPE C PAVEMENT MARKER
- TYPE G PAVEMENT MARKER
- 4" THERMOPLASTIC WHITE TRAFFIC STRIPE

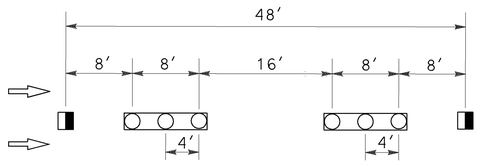

DETAIL 10 Mod
NO SCALE

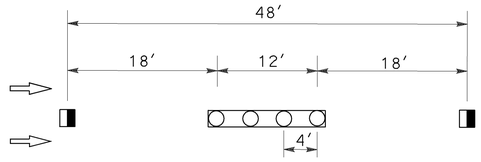

DETAIL 13 Mod
NO SCALE

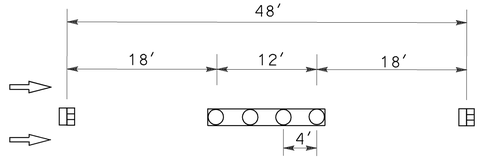

DETAIL 14 Mod
NO SCALE

NOTES:

1. ALL TRAFFIC STRIPES AND PAVEMENT MARKINGS ARE THERMOPLASTIC UNLESS OTHERWISE SHOWN ON PLANS.
2. ALL CONFLICTING PAVEMENT DELINEATION SHALL BE REMOVED.
3. SEE MODIFY RAMP METERING SYSTEM PLAN FOR ADDITIONAL SIGNS.
4. FOR COMPLETE RIGHT OF WAY AND ACCURATE ACCESS DATA, SEE RIGHT OF WAY RECORD MAPS AT DISTRICT OFFICE.

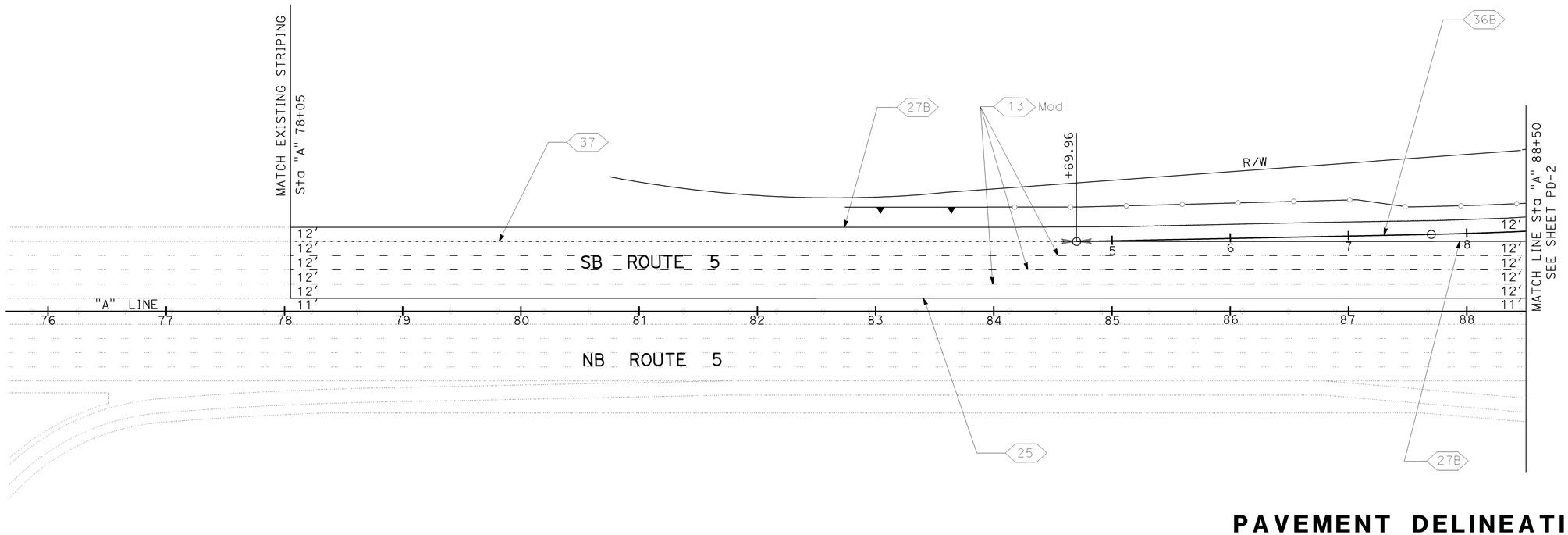

PAVEMENT DELINEATION AND SIGN PLAN

SCALE: 1"=50′

PD-1

THIS PLAN ACCURATE FOR PAVEMENT DELINEATION AND SIGNING ONLY.

REVISED BY	DATE REVISED

CALCULATED-DESIGNED BY: J SHIAO
CHECKED BY: S YEH

CONSULTANT FUNCTIONAL SUPERVISOR: JAMAL SALMAN

STATE OF CALIFORNIA - DEPARTMENT OF TRANSPORTATION
DESIGN F

LAST REVISION DATE PLOTTED => 30-MAR-2009
TIME PLOTTED => 08:19
01-21-09

BORDER LAST REVISED 4/11/2008

RELATIVE BORDER SCALE IS IN INCHES 0 2 1 3

USERNAME => trpierce
DGN FILE => c0g940na001.dgn

CU 12231

EA 0G9401

NOTE:

FOR COMPLETE RIGHT OF WAY AND ACCURATE ACCESS DATA,
SEE RIGHT OF WAY RECORD MAPS AT DISTRICT OFFICE.

Dist	COUNTY	ROUTE	POST MILES TOTAL PROJECT	SHEET No.	TOTAL SHEETS
12	Ora	5	1.3/1.7	27	127

Hon Wai Yow — REGISTERED CIVIL ENGINEER — 01-22-09 DATE

3-23-09
PLANS APPROVAL DATE

REGISTERED PROFESSIONAL ENGINEER — HON WAI YOW — No. C43276 — Exp 3/31/10 — CIVIL — STATE OF CALIFORNIA

THE STATE OF CALIFORNIA OR ITS OFFICERS OR AGENTS SHALL NOT BE RESPONSIBLE FOR THE ACCURACY OR COMPLETENESS OF ELECTRONIC COPIES OF THIS PLAN SHEET.

ORANGE COUNTY
TRANSPORTATION AUTHORITY
550 SOUTH MAIN STREET
ORANGE, CA 92863

ACT CONSULTING
ENGINEERS, INC.
5 CORPORATE PARK, STE 260
IRVINE, CA 92606

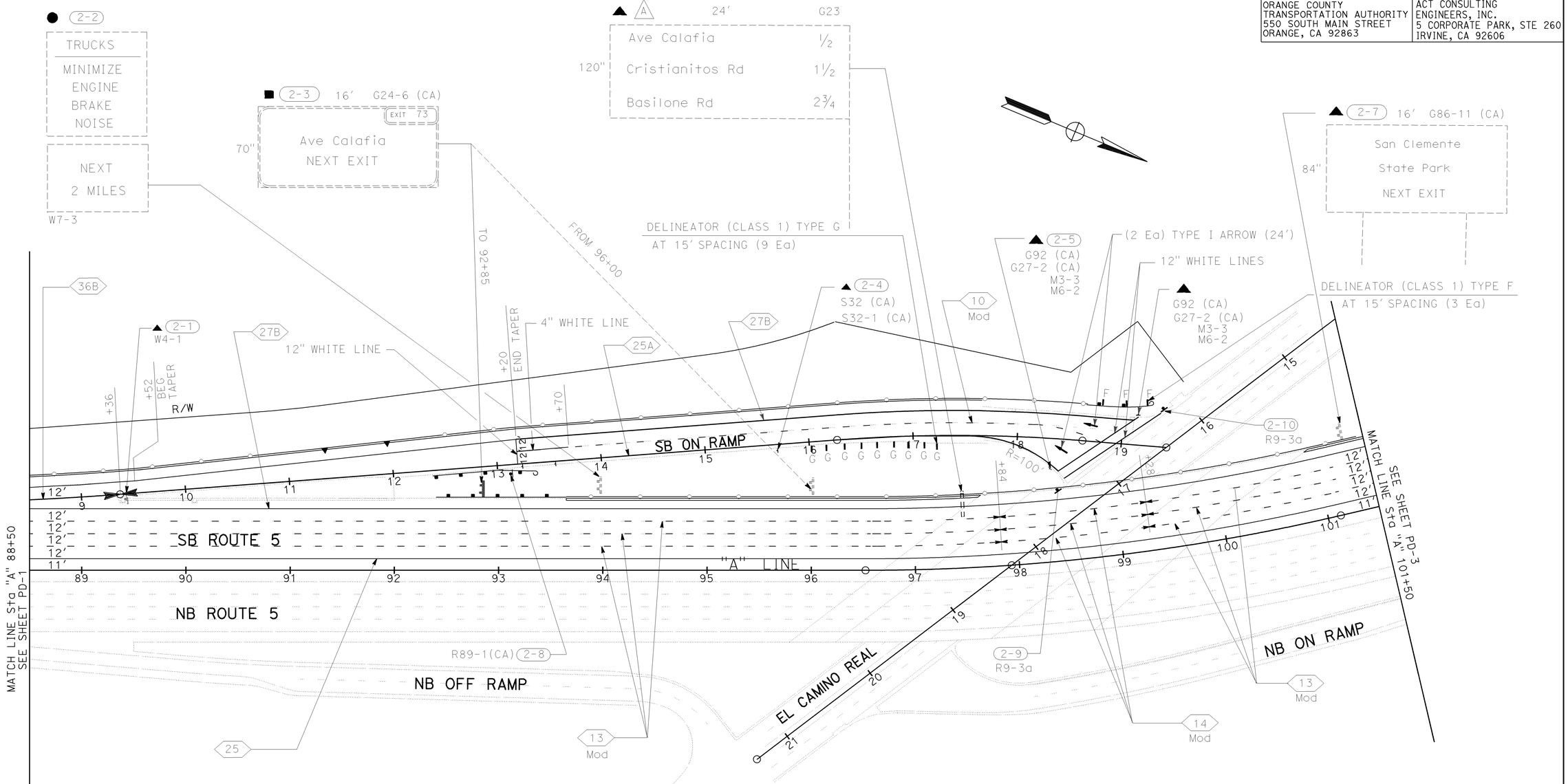

PAVEMENT DELINEATION AND SIGN PLAN

SCALE: 1"=50′

THIS PLAN ACCURATE FOR PAVEMENT DELINEATION AND SIGNING ONLY.

PD-2

STATE OF CALIFORNIA - DEPARTMENT OF TRANSPORTATION — DESIGN F
CONSULTANT FUNCTIONAL SUPERVISOR — JAMAL SALMAN
CALCULATED-DESIGNED BY — J SHIAO
CHECKED BY — S YEH
REVISED BY / DATE REVISED

LAST REVISION DATE PLOTTED => 30-MAR-2009
TIME PLOTTED => 08:19

BORDER LAST REVISED 4/11/2008 | RELATIVE BORDER SCALE IS IN INCHES 0 2 1 3 | USERNAME => trpierce | DGN FILE => c0g940na002.dgn | CU 12231 | EA 0G9401

NOTE:

FOR COMPLETE RIGHT OF WAY AND ACCURATE ACCESS DATA,
SEE RIGHT OF WAY RECORD MAPS AT DISTRICT OFFICE.

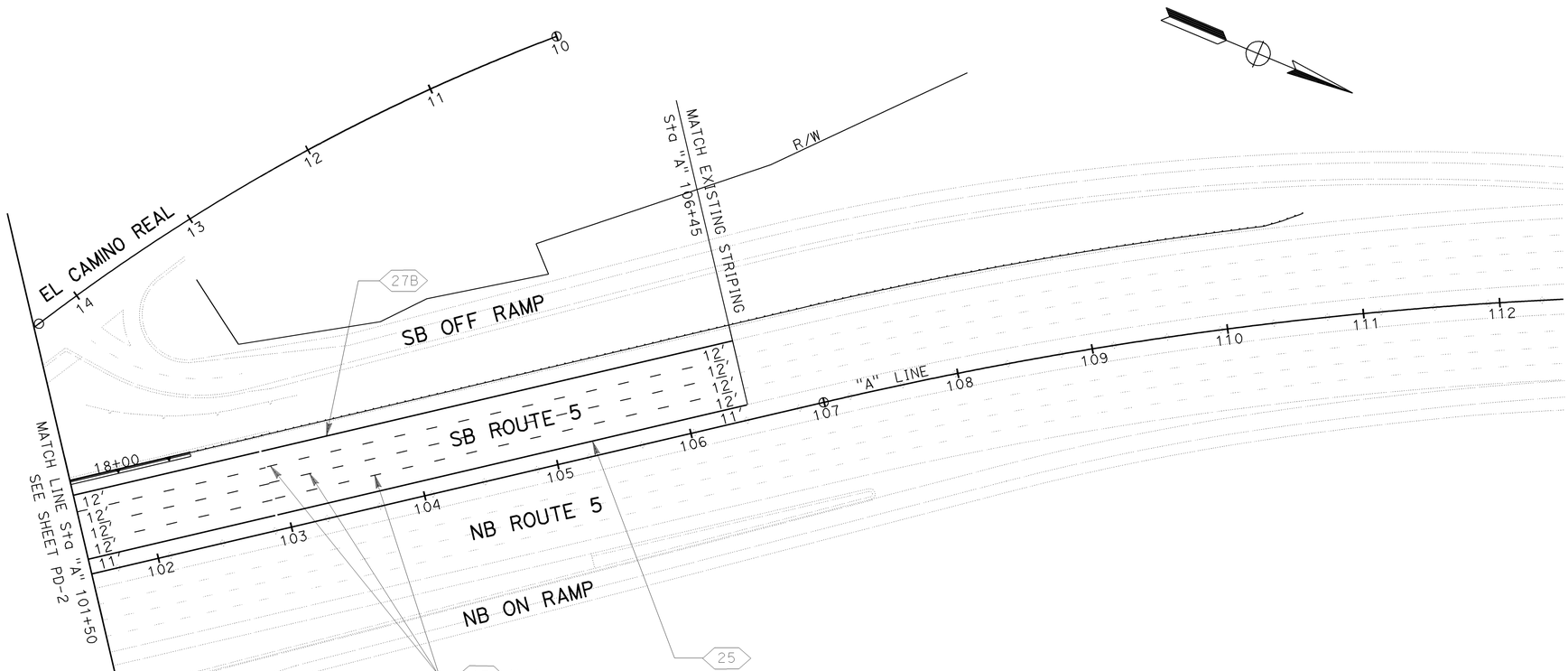

THIS PLAN ACCURATE FOR PAVEMENT DELINEATION AND SIGNING ONLY.

PAVEMENT DELINEATION AND SIGN PLAN

SCALE: 1"=50'

PD-3

Dist	COUNTY	ROUTE	POST MILES TOTAL PROJECT	SHEET No.	TOTAL SHEETS
12	Ora	5	1.3/1.7	28	127

Hon Wai Yow 01-22-09
REGISTERED CIVIL ENGINEER DATE

3-23-09
PLANS APPROVAL DATE

REGISTERED PROFESSIONAL ENGINEER
HON WAI YOW
No. C43276
Exp 3/31/10
CIVIL
STATE OF CALIFORNIA

THE STATE OF CALIFORNIA OR ITS OFFICERS OR AGENTS SHALL NOT BE RESPONSIBLE FOR THE ACCURACY OR COMPLETENESS OF ELECTRONIC COPIES OF THIS PLAN SHEET.

ORANGE COUNTY
TRANSPORTATION AUTHORITY
550 SOUTH MAIN STREET
ORANGE, CA 92863

ACT CONSULTING
ENGINEERS, INC.
5 CORPORATE PARK, STE 260
IRVINE, CA 92606

REVISED BY	DATE REVISED

CALCULATED-DESIGNED BY: J SHIAO
CHECKED BY: S YEH

CONSULTANT FUNCTIONAL SUPERVISOR: JAMAL SALMAN

STATE OF CALIFORNIA - DEPARTMENT OF TRANSPORTATION
DESIGN F

LAST REVISION 01-21-09
DATE PLOTTED => 30-MAR-2009
TIME PLOTTED => 08:19

BORDER LAST REVISED 4/11/2008

RELATIVE BORDER SCALE IS IN INCHES 0 2 1 3

USERNAME => trpierce
DGN FILE => c0g940na003.dgn

CU 12231

EA 0G9401

Dist	COUNTY	ROUTE	POST MILES TOTAL PROJECT	SHEET No.	TOTAL SHEETS
12	Ora	5	1.3/1.7	29	127

REGISTERED CIVIL ENGINEER — 01-22-09 DATE

3-23-09
PLANS APPROVAL DATE

REGISTERED PROFESSIONAL ENGINEER — HON WAI YOW — No. C43276 — Exp 3/31/10 — CIVIL — STATE OF CALIFORNIA

THE STATE OF CALIFORNIA OR ITS OFFICERS OR AGENTS SHALL NOT BE RESPONSIBLE FOR THE ACCURACY OR COMPLETENESS OF ELECTRONIC COPIES OF THIS PLAN SHEET.

ORANGE COUNTY
TRANSPORTATION AUTHORITY
550 SOUTH MAIN STREET
ORANGE, CA 92863

ACT CONSULTING
ENGINEERS, INC.
5 CORPORATE PARK, STE 260
IRVINE, CA 92606

MATERIAL SUMMARY (CONTRACTOR FURNISHED SIGNS)

SHEET No.	SIGN No.	SIGN CODE	PANEL SIZE (in X in)	SIGN AREA (SQFT)	SINGLE FACED	BACKGROUND		LEGEND		GRAFFITI FILM	FURNISH SINGLE-SHEET ALUMINUM UNFRAMED	REMARK
						SHEETING COLOR	RETROREFLECTIVE ASTM TYPE	SHEETING COLOR	RETROREFLECTIVE ASTM TYPE	STANDARD	0.063 in SQFT	
PD-2	2-8	R89-1 (CA)	24 X 10	1.7	X	WHITE	III	BLACK	IV	X	1.7	
PD-2	2-9 2-10	R9-3A (CA)	18 x 18	2 .25 (2 EA)	X	WHITE	III	BLACK AND RED	IV	X	4.5	
TOTAL											6.2	

ROADSIDE SIGNS QUANTITIES

SHEET No.	SIGN No.	CODE	PANEL SIZE	POST SIZE	POST LENGTH L†	POST LENGTH R†	INSTALL SIGN (STRAP & SADDLE BRACKET METHOD)	RELOCATE ROADSIDE SIGN (WOOD POST)	REMOVE ROADSIDE SIGN	REMARKS
					LF	LF	EA	EA	EA	
PD-2	2-1	W4-1	Exist							PROTECT IN PLACE
	2-2	W7-3	Exist						1	
	2-3	G24-6 (CA)	Exist	6" X 8"	7.00	10.16		1		RELOCATE SIGN WITH NEW POSTS
	2-4	S32 (CA)	Exist							PROTECT IN PLACE
		S32-1 (CA)	Exist							
	2-5	G92 (CA)	Exist							PROTECT IN PLACE
		G27-2 (CA)	Exist							
		M3-3	Exist							
		M6-2	Exist							
	2-6	G92 (CA)	Exist							PROTECT IN PLACE
		G27-2 (CA)	Exist							
		M3-3	Exist							
		M6-2	Exist							
	2-7	G86-11 (CA)	Exist							PROTECT IN PLACE
	2-8	R89-1 (CA)	24" x 10"				1			
	2-9	R9-3A (CA)	18" x 18"				1			MOUNTED ON PEDESTRIAN BARRICADE; SEE SHEETS C-2 & C-3
	2-10	R9-3A (CA)	18" x 18"				1			
TOTAL							3	1	1	

PAVEMENT DELINEATION

SHEET No.	STATION LIMITS	THERMOPLASTIC TRAFFIC STRIPE 4" DETAIL 10 Mod (BROKEN 16'-8')	4" DETAIL 13 Mod (BROKEN 36'-12')	4" DETAIL 14 Mod (BROKEN 36'-12')	4" DETAIL 25, 25A	4" DETAIL 27, 27B	4" SOLID WHITE LINE	8" DETAIL 37, 37B (BROKEN 12'-3')	8" DETAIL 36, 36A, 36B	PAVEMENT MARKER NON-REFLECTIVE TYPE A	PAVEMENT MARKER NON-REFLECTIVE TYPE AY	PAVEMENT MARKER RETROREFLECTIVE TYPE C	PAVEMENT MARKER RETROREFLECTIVE TYPE D	PAVEMENT MARKER RETROREFLECTIVE TYPE G	PAVEMENT MARKER RETROREFLECTIVE TYPE H	THERMOPLASTIC PAVEMENT MARKING ARROWS	THERMOPLASTIC PAVEMENT MARKING 12" WHITE LINE	DELINEATOR (CLASS 1) TYPE F	DELINEATOR (CLASS 1) TYPE G
		LF	LF	LF	LF	LF	LF	LF	LF	EA	EA	EA	EA	EA	EA	SQFT	SQFT	EA	EA
PD-1	"A" 78+05.00 TO "A" 88+50.00		3135		1045	1045		665		190				38	23				
	"SB-ON" 4+69.96 TO "SB-ON" 8+50.00					380			380	40		8		17					
PD-2	"A" 88+50.00 TO "A" 101+50.00		3468	432	1300	1300				325		10		74	28				
	"SB-ON" 8+50.00 TO "SB-ON" 19+43.39	514			1000	1070	50		86	71				5	39	62	230	3	9
PD-3	"A" 101+50.00 TO "A" 106+45.00		1485		495	495				124				32	11				
TOTAL		514	8520		8180			665	466	750		267				292		12	

PAVEMENT DELINEATION AND SIGN QUANTITIES

PDQ-1

REVISED BY	DATE REVISED

CALCULATED-DESIGNED BY	CHECKED BY
J SHIAO	S YEH

CONSULTANT FUNCTIONAL SUPERVISOR: JAMAL SALMAN

STATE OF CALIFORNIA - DEPARTMENT OF TRANSPORTATION — DESIGN F

Caltrans

LAST REVISION — DATE PLOTTED => 30-MAR-2009 — TIME PLOTTED => 08:20
01-21-09

BORDER LAST REVISED 4/11/2008

RELATIVE BORDER SCALE IS IN INCHES 0 1 2 1 3

USERNAME => trpierce
DGN FILE => c0g940nc001.dgn

CU 12231

EA 0G9401

Dist	COUNTY	ROUTE	POST MILES TOTAL PROJECT	SHEET No.	TOTAL SHEETS
12	Ora	5	1.3/1.7	30	127

Joseph W. Sawtelle 01-22-09
REGISTERED CIVIL ENGINEER DATE

3-23-09
PLANS APPROVAL DATE

REGISTERED PROFESSIONAL ENGINEER
JOSEPH W. SAWTELLE
No. C 60110
Exp. 6/30/10
CIVIL
STATE OF CALIFORNIA

THE STATE OF CALIFORNIA OR ITS OFFICERS OR AGENTS SHALL NOT BE RESPONSIBLE FOR THE ACCURACY OR COMPLETENESS OF SCANNED COPIES OF THIS PLAN SHEET.

ORANGE COUNTY
TRANSPORTATION AUTHORITY
550 SOUTH MAIN STREET
ORANGE, CA 92863

RMC, INC.
6 HUTTON CENTRE DRIVE
SUITE 1250
SANTA ANA, CA 92707

REMOVAL QUANTITIES

SHEET No.	STATION LIMIT	REMOVE METAL BEAM GUARD RAILING	REMOVE CONCRETE				REMOVE MASONRY BLOCK WALL (SOUNDWALL)	REMOVE AC DIKE (N)
			RETAINING WALL	BARRIER	CURB AND GUTTER AND SIDEWALK	BARRIER (MODIFIED)		
		LF	CY	LF	CY	LF	SQFT	LF
L-2	FROM Lt 17+04 "SB-ON" LINE TO Lt 17+66.5 "SB-ON" LINE	62.5						
L-2	FROM Lt 94+61 "A" LINE TO Lt 97+52 "A" LINE	300						
L-3	FROM Lt 101+58.5 "A" LINE TO Lt 102+65 "A" LINE	112.5						
L-1	FROM Lt 82+74 "A" LINE TO Lt 84+10 "A" LINE		90					
L-1, L-2	FROM Lt 87+06.88 "A" LINE TO Lt 17+05 "SB-ON" LINE			1000				
C-1	FROM Lt 17+66 "SB-ON" LINE TO Lt 17+95 "SB-ON" LINE				2			
C-1	FROM Lt 17+98 "SB-ON" LINE TO Lt 18+65 "SB-ON" LINE				5			
C-2	SOUTH WEST RETURN				2.3			
C-3	SOUTH EAST RETURN				2			
L-1	FROM Lt 82+74 "A" LINE TO Lt 87+06.88 "A" LINE					435		
L-1	FROM Lt 82+74 "A" LINE TO Lt 87+06.88 "A" LINE						2100	
L-2	FROM Lt 18+65 "SB-ON" LINE TO Lt 19+03.22 "SB-ON" LINE							39
L-2	FROM Lt 93+65 "A" LINE TO Lt 97+51.68 "A" LINE							387
L-3	FROM Lt 101+59.89 "A" LINE TO Lt 102+40 "A" LINE							80
	TOTAL	475	90	1000	11.3	435	2100	506

EARTH WORK VOLUMES

SHEET No.	LOCATION	ROADWAY EXCAVATION (CY)	ROADWAY EXCAVATION (TYPE Y-1) (AERIALLY DEPOSITED LEAD) (CY)
L-1, L-2, L-3	FROM Lt 81+78 "A" LINE TO Lt 17+66 "SB-ON" LINE	656	
L-2	FROM Lt 17+98 "SB-ON" LINE TO Lt 18+65 "SB-ON" LINE	12	
L-2	FROM Lt 93+65 "A" LINE TO Lt 97+66 "A" LINE	45	
L-2, L-3	FROM Lt 100+90.5 "A" LINE TO Lt 102+40 "A" LINE	17	
L-2	FROM Rt 18+40.81 "SB-ON" LINE TO Rt 18+53.20 "SB-ON" LINE	2	
L-3	FROM Rt 103+20 "A" LINE TO Rt 103+40 "A" LINE		2
	TOTAL	732	2

(N) - NOT A SEPARATE PAY ITEM,
FOR INFORMATION ONLY

SUMMARY OF QUANTITIES

Q-1

STATE OF CALIFORNIA - DEPARTMENT OF TRANSPORTATION
DESIGN F
CONSULTANT FUNCTIONAL SUPERVISOR: JAMAL SALMAN
CALCULATED-DESIGNED BY: C. SOSA
CHECKED BY: J. SAWTELLE
REVISED BY | DATE REVISED

LAST REVISION 01-20-09
DATE PLOTTED => 30-MAR-2009
TIME PLOTTED => 11:33

BORDER LAST REVISED 4/11/2008
RELATIVE BORDER SCALE IS IN INCHES 0 1 2 3
USERNAME => trmikesl
DGN FILE => c0g940pa001.dgn
CU 12231
EA 0G9401

Dist	COUNTY	ROUTE	POST MILES TOTAL PROJECT	SHEET No.	TOTAL SHEETS
12	Ora	5	1.3/1.7	31	127

Joseph W. Sawtelle 01-22-09
REGISTERED CIVIL ENGINEER DATE

3-23-09
PLANS APPROVAL DATE

REGISTERED PROFESSIONAL ENGINEER
JOSEPH W. SAWTELLE
No. C 60110
EXP. 6/30/10
CIVIL
STATE OF CALIFORNIA

THE STATE OF CALIFORNIA OR ITS OFFICERS OR AGENTS SHALL NOT BE RESPONSIBLE FOR THE ACCURACY OR COMPLETENESS OF SCANNED COPIES OF THIS PLAN SHEET.

ORANGE COUNTY
TRANSPORTATION AUTHORITY
550 SOUTH MAIN STREET
ORANGE, CA 92863

RMC, INC.
6 HUTTON CENTRE DRIVE
SUITE 1250
SANTA ANA, CA 92707

METAL BEAM GUARD RAILING (WOOD POST)

SHEET No.	LOCATION	MBGR	ALTERNATIVE FLARED TERMINAL SYSTEM	END ANCHOR ASSEMBLY TYPE SFT	TRANSITION RAILING TYPE WB
		LF	EA	EA	EA
L-2	FROM R† 12+37.50 "SB-ON" LINE TO R† 13+00 "SB-ON" LINE	62.5	1	1	
L-2	FROM L† 18+63.82 "SB-ON" LINE TO L† 19+28.43 "SB-ON" LINE		1		1
L-2	FROM L† 92+40 "A" LINE TO L† 93+40 "A" LINE	100		1	1
L-3	FROM L† 102+40 "A" LINE TO L† 102+65 "A" LINE				1
	TOTAL	162.5	2	2	3

MINOR CONCRETE (CURB AND GUTTER AND CURB RAMP)

SHEET No.	LOCATION	MINOR CONCRETE (CURB AND GUTTER)		MINOR CONCRETE (CURB RAMP)
		A1-8	A2-8	
		CY	CY	CY
L-2	FROM L† 19+14.97 "SB-ON" LINE TO L† 19+35.25 "SB-ON" LINE	0.7		
L-2	FROM R† 18+38.22 "SB-ON" LINE TO R† 18+47.94 "SB-ON" LINE		1.1	
L-2	SOUTH EAST RETURN			1.3
L-2	SOUTH WEST RETURN			2.0
	TOTAL	1.8		3.3

PEDESTRIAN BARRICADES TYPE I

SHEET No.	LOCATION	EA
C-2	30.2' R† 16+19 "ECR" LINE	1
C-3	30.0' R† 17+57 "ECR" LINE	1
	TOTAL	2

PAVEMENT QUANTITIES

SHEET No.	LOCATION	PAVEMENT SECTION No.	HOT MIX ASPHALT (TYPE A)	CLASS 2 AGGREGATE BASE	COLD PLANE AC Pvm† (0.20' MAX)	TACK COAT	LIQUID ASPHALT (PRIME COAT)	PLACE HOT MIX ASPHALT (Misc AREA)	PLACE HOT MIX ASPHALT DIKE (TYPE C)
			TON	CY	SQYD	TON	TON	SQYD	LF
L-1	FROM L† 81+78.00 "A" LINE TO L† 84+10.00 "A" LINE	1	234	200		0.8	0.75		
L-1	FROM L† 84+10.00 "A" LINE TO L† 7+50.00 "SB-ON" LINE	1	41	35		0.4	0.10		
L-1	FROM L† 84+10.00 "A" LINE TO L† 7+70.02 "SB-ON" LINE	3	51		393	0.5	0.15		
L-1, L-2	FROM L† 7+50.00 "SB-ON" LINE TO L† 17+93.73 "SB-ON" LINE	2	403	385		0.9	1.25		
L-2	FROM L† 93+65.00 "A" LINE TO L† 97+66.53 "A" LINE	1	53	45		0.4	0.15		
L-2	FROM L† 93+65.00 "A" LINE TO L† 97+66.53 "A" LINE	3	46		354	0.2	0.15		
L-2, L-3	FROM L† 100+90.73 "A" LINE TO L† 102+40.00 "A" LINE	1	20	17		0.2	0.10		
L-2, L-3	FROM L† 100+90.73 "A" LINE TO L† 102+40.00 "A" LINE	3	18		134	0.05	0.05		
L-2	FROM R† 18+40.80 "SB-ON" LINE TO R† 18+53.20 "SB-ON" LINE	2	2	2		0.05	0.05		
L-2	FROM L† 17+05 "SB-ON" LINE TO L† 18+65 "SB-ON" LINE (Misc AREA)		18						
C-1	FROM L† 17+05 "SB-ON" LINE TO L† 18+65 "SB-ON" LINE (Misc AREA)							110	
L-2	FROM L† 17+98 "SB-ON" LINE TO L† 18+65 "SB-ON" LINE	2	9	9		0.05	0.05		
C-1	FROM L† 17+05 "SB-ON" LINE TO L† 18+65 "SB-ON" LINE (HMA DIKE)		1						165
X-8	FROM Sta 13+00 "WALL LOL" TO Sta 14+00 "WALL LOL"		2					12	
X-8	FROM Sta 19+25 "WALL LOL" TO Sta 21+00 "WALL LOL"		3					20	
	TOTAL		901	693	488	3.55	2.80	142	165

SUMMARY OF QUANTITIES

Q-2

REVISED BY | DATE REVISED
C. SOSA | J. SAWTELLE
CALCULATED-DESIGNED BY | CHECKED BY
CONSULTANT FUNCTIONAL SUPERVISOR: JAMAL SALMAN
STATE OF CALIFORNIA - DEPARTMENT OF TRANSPORTATION
DESIGN F
Caltrans

LAST REVISION 01-20-09 | DATE PLOTTED => 30-MAR-2009 | TIME PLOTTED => 08:20

BORDER LAST REVISED 4/11/2008 | RELATIVE BORDER SCALE IS IN INCHES 0 1 2 3 | USERNAME => trpierce | DGN FILE => c0g940pa002.dgn | CU 12231 | EA 0G9401

Dist	COUNTY	ROUTE	POST MILES TOTAL PROJECT	SHEET No.	TOTAL SHEETS
12	Ora	5	1.3/1.7	32	127

Joseph W. Sawtelle 01-22-09
REGISTERED CIVIL ENGINEER DATE

3-23-09
PLANS APPROVAL DATE

REGISTERED PROFESSIONAL ENGINEER — JOSEPH W. SAWTELLE — No. C 60110 — Exp. 6/30/10 — CIVIL — STATE OF CALIFORNIA

THE STATE OF CALIFORNIA OR ITS OFFICERS OR AGENTS SHALL NOT BE RESPONSIBLE FOR THE ACCURACY OR COMPLETENESS OF SCANNED COPIES OF THIS PLAN SHEET.

ORANGE COUNTY
TRANSPORTATION AUTHORITY
550 SOUTH MAIN STREET
ORANGE, CA 92863

RMC, INC.
6 HUTTON CENTRE DRIVE
SUITE 1250
SANTA ANA, CA 92707

LEGEND:

- (X) DRAINAGE SYSTEM NUMBER
- (X) DRAINAGE UNIT NUMBER
- EXISTING INLET

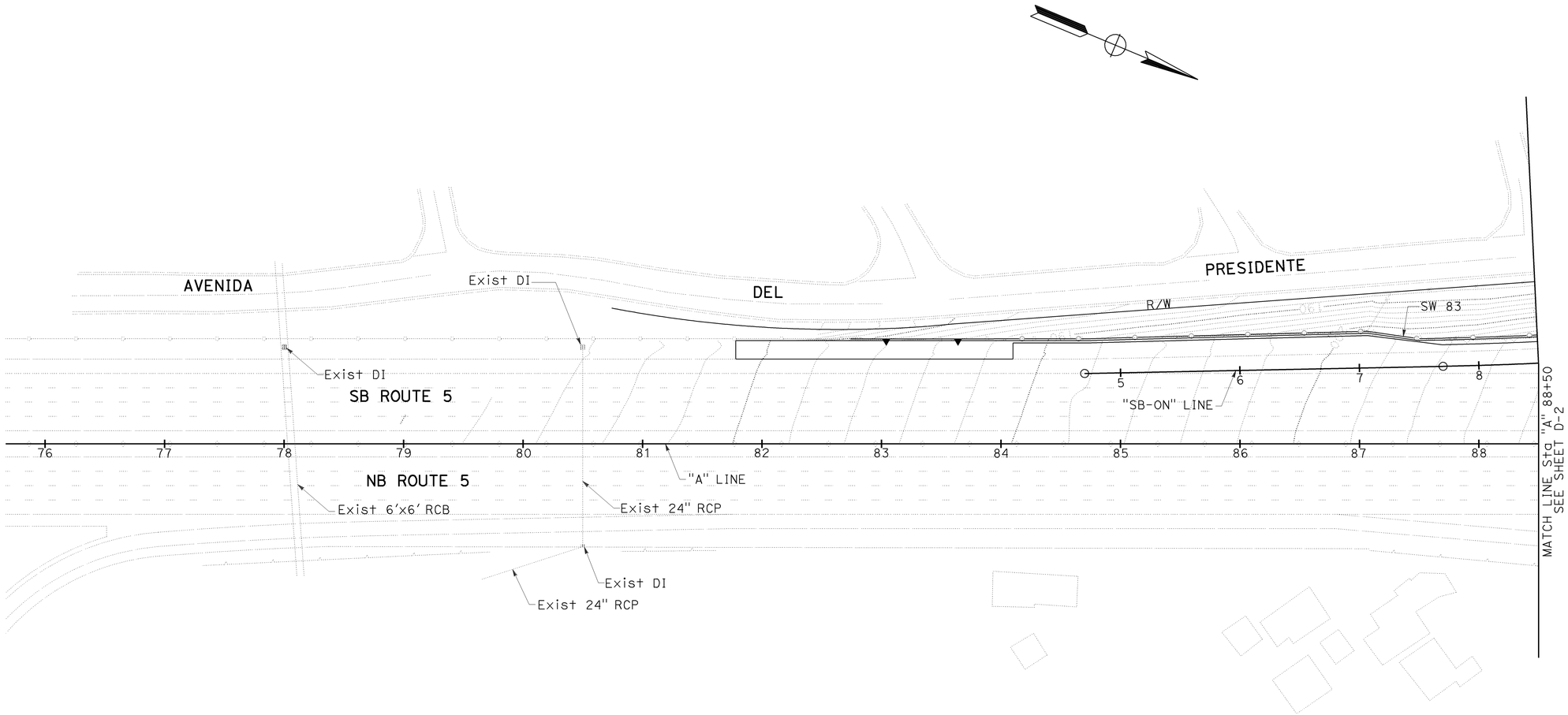

THIS PLAN ACCURATE FOR DRAINAGE WORK ONLY.

DRAINAGE PLAN

SCALE: 1"=50'

D-1

STATE OF CALIFORNIA - DEPARTMENT OF TRANSPORTATION	CONSULTANT FUNCTIONAL SUPERVISOR	CALCULATED-DESIGNED BY	CHECKED BY	REVISED BY	DATE REVISED
DESIGN F	JAMAL SALMAN	C. SOSA	J. SAWTELLE		

LAST REVISION | DATE PLOTTED => 30-MAR-2009
01-21-09 | TIME PLOTTED => 08:20

Dist	COUNTY	ROUTE	POST MILES TOTAL PROJECT	SHEET No.	TOTAL SHEETS
12	Ora	5	1.3/1.7	33	127

Joseph W. Sawtelle 01-22-09
REGISTERED CIVIL ENGINEER DATE

JOSEPH W. SAWTELLE No. C 60110 Exp. 6/30/10 CIVIL — REGISTERED PROFESSIONAL ENGINEER — STATE OF CALIFORNIA

3-23-09
PLANS APPROVAL DATE

THE STATE OF CALIFORNIA OR ITS OFFICERS OR AGENTS SHALL NOT BE RESPONSIBLE FOR THE ACCURACY OR COMPLETENESS OF SCANNED COPIES OF THIS PLAN SHEET.

ORANGE COUNTY
TRANSPORTATION AUTHORITY
550 SOUTH MAIN STREET
ORANGE, CA 92863

RMC, INC.
6 HUTTON CENTRE DRIVE
SUITE 1250
SANTA ANA, CA 92707

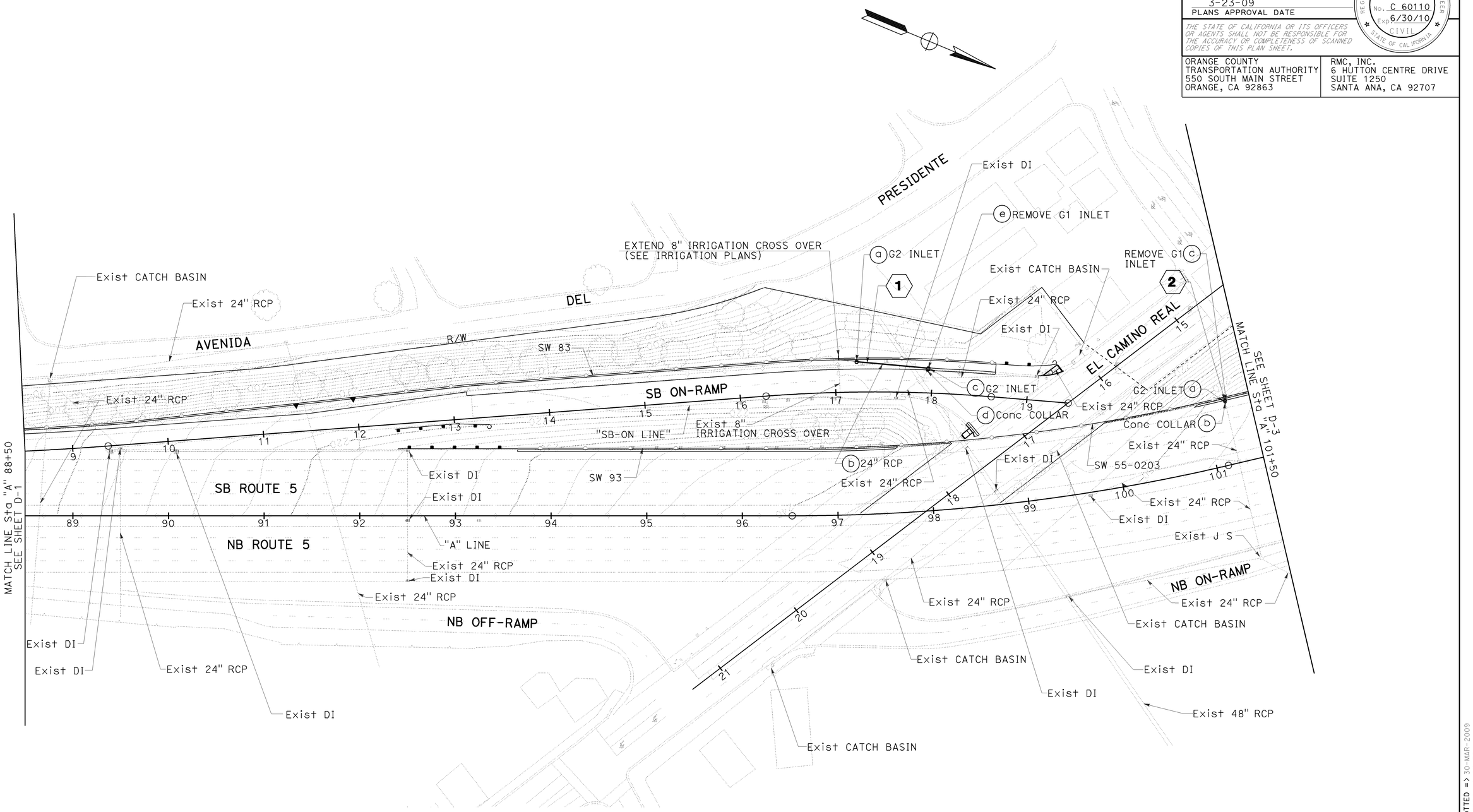

THIS PLAN ACCURATE FOR DRAINAGE WORK ONLY.

DRAINAGE PLAN

SCALE: 1"=50'

D-2

STATE OF CALIFORNIA - DEPARTMENT OF TRANSPORTATION | DESIGN F | CONSULTANT FUNCTIONAL SUPERVISOR: JAMAL SALMAN | CALCULATED-DESIGNED BY: J. SAWTELLE | CHECKED BY: C. SOSA | REVISED BY | DATE REVISED

LAST REVISION DATE PLOTTED => 30-MAR-2009
01-21-09 TIME PLOTTED => 08:20

BORDER LAST REVISED 4/11/2008 | RELATIVE BORDER SCALE IS IN INCHES 0 1 2 3 | USERNAME => trpierce | DGN FILE => c0g940ia002.dgn | CU 12231 | EA 0G9401

Dist	COUNTY	ROUTE	POST MILES TOTAL PROJECT	SHEET No.	TOTAL SHEETS
12	Ora	5	1.3/1.7	34	127

Joseph W. Sawtelle 01-22-09
REGISTERED CIVIL ENGINEER DATE

3-23-09
PLANS APPROVAL DATE

REGISTERED PROFESSIONAL ENGINEER
JOSEPH W. SAWTELLE
No. C 60110
Exp. 6/30/10
CIVIL
STATE OF CALIFORNIA

THE STATE OF CALIFORNIA OR ITS OFFICERS OR AGENTS SHALL NOT BE RESPONSIBLE FOR THE ACCURACY OR COMPLETENESS OF SCANNED COPIES OF THIS PLAN SHEET.

ORANGE COUNTY
TRANSPORTATION AUTHORITY
550 SOUTH MAIN STREET
ORANGE, CA 92863

RMC, INC.
6 HUTTON CENTRE DRIVE
SUITE 1250
SANTA ANA, CA 92707

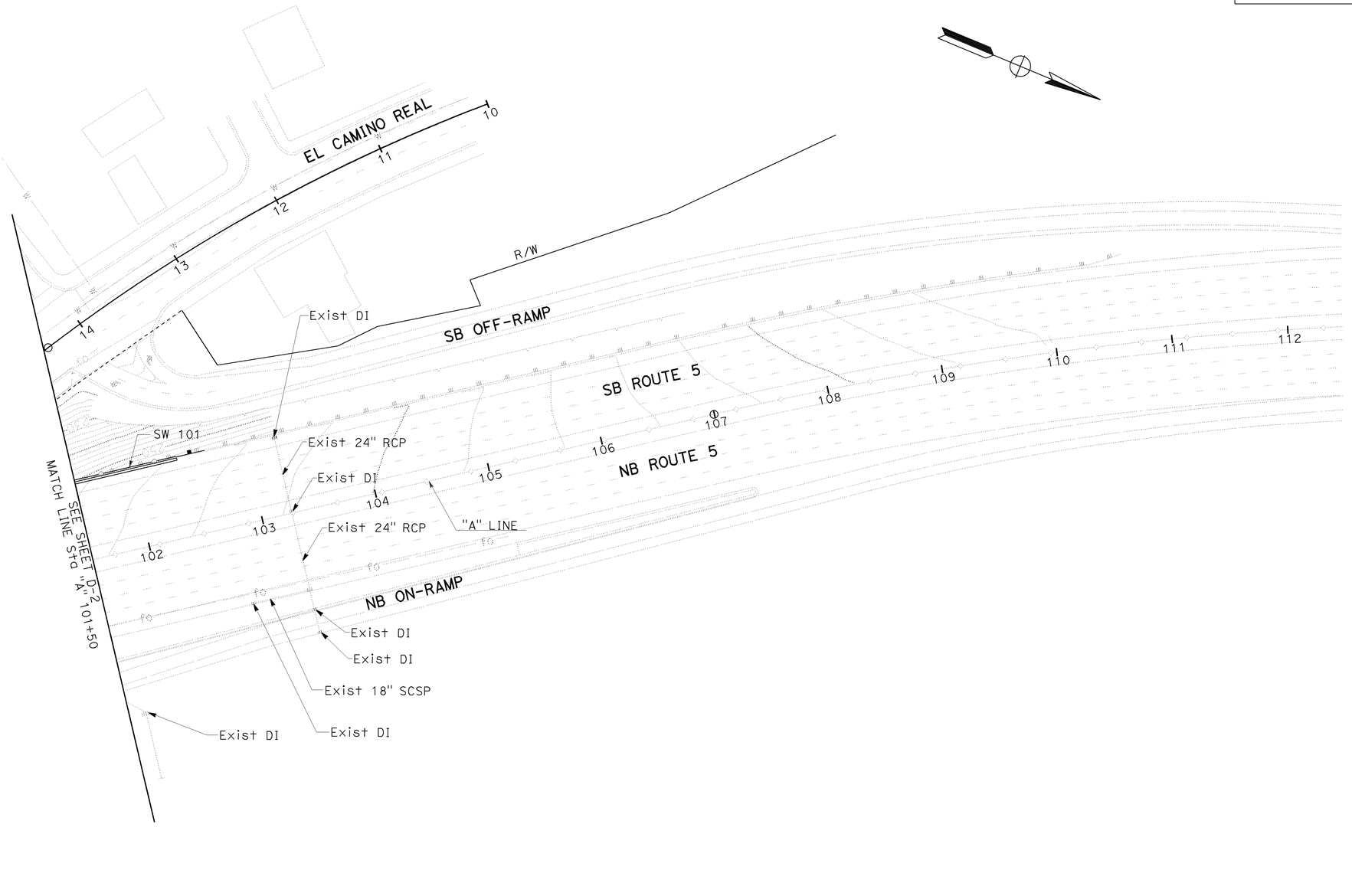

DRAINAGE PLAN

SCALE: 1"=50'

D-3

THIS PLAN ACCURATE FOR DRAINAGE WORK ONLY.

STATE OF CALIFORNIA - DEPARTMENT OF TRANSPORTATION
Caltrans
DESIGN F
CONSULTANT FUNCTIONAL SUPERVISOR: JAMAL SALMAN
CALCULATED-DESIGNED BY: J. SAWTELLE
CHECKED BY: C. SOSA
REVISED BY
DATE REVISED

LAST REVISION
DATE PLOTTED => 30-MAR-2009
TIME PLOTTED => 08:20
01-21-09

BORDER LAST REVISED 4/11/2008
RELATIVE BORDER SCALE IS IN INCHES 0 1 2 3
USERNAME => trpierce
DGN FILE => c0g940ia003.dgn
CU 12231
EA 0G9401

Dist	COUNTY	ROUTE	POST MILES TOTAL PROJECT	SHEET No.	TOTAL SHEETS
12	Ora	5	1.3/1.7	35	127

Joseph W. Sawtelle 01-22-09
REGISTERED CIVIL ENGINEER DATE

3-23-09
PLANS APPROVAL DATE

REGISTERED PROFESSIONAL ENGINEER — JOSEPH W. SAWTELLE — No. C 60110 — EXP 6/30/10 — CIVIL — STATE OF CALIFORNIA

THE STATE OF CALIFORNIA OR ITS OFFICERS OR AGENTS SHALL NOT BE RESPONSIBLE FOR THE ACCURACY OR COMPLETENESS OF SCANNED COPIES OF THIS PLAN SHEET.

ORANGE COUNTY
TRANSPORTATION AUTHORITY
550 SOUTH MAIN STREET
ORANGE, CA 92863

RMC, INC.
6 HUTTON CENTRE DRIVE
SUITE 1250
SANTA ANA, CA 92707

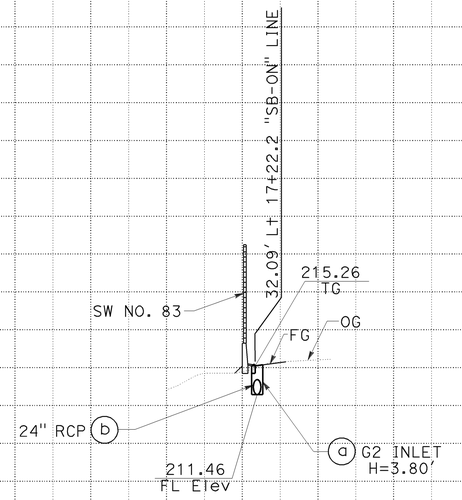

DRAINAGE SYSTEM No. 1 UNIT (a)
(SEE BELOW)

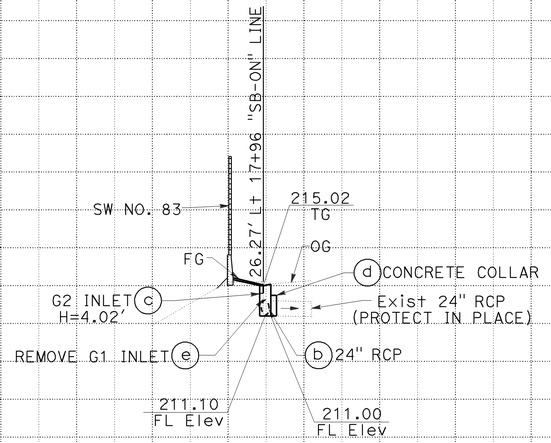

DRAINAGE SYSTEM No. 1 UNIT (c)
(SEE BELOW)

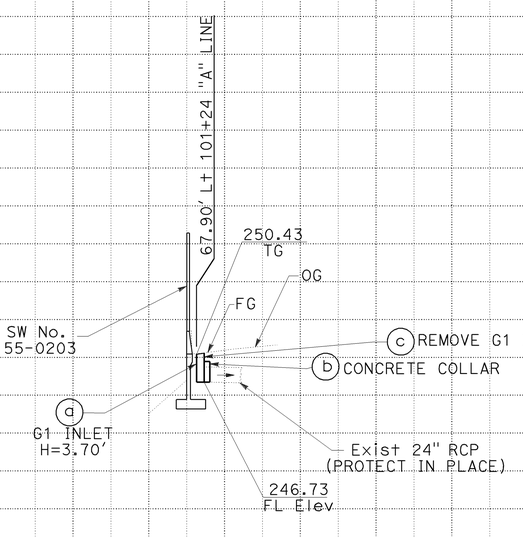

DRAINAGE SYSTEM No. 2

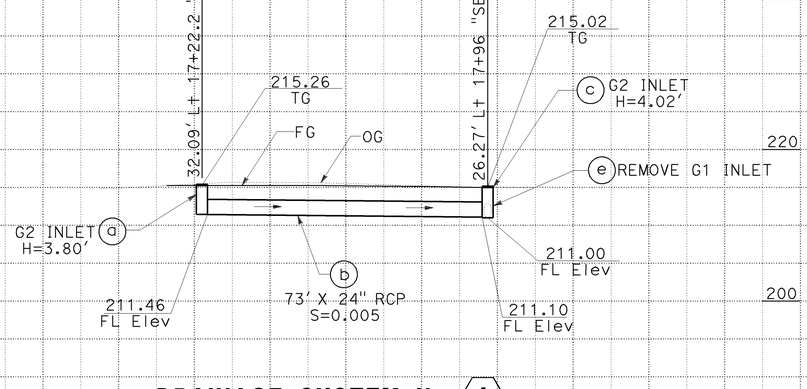

DRAINAGE SYSTEM No. 1

DRAINAGE PROFILE

SCALE: 1"=20' Horiz
1"=10' Vert

DP-1

Station.
CY Exc
Emb

STATE OF CALIFORNIA - DEPARTMENT OF TRANSPORTATION
DESIGN F
CONSULTANT FUNCTIONAL SUPERVISOR: JAMAL SALMAN
CALCULATED-DESIGNED BY: J. SAWTELLE
CHECKED BY: C. SOSA
REVISED BY | DATE REVISED

LAST REVISION | DATE PLOTTED => 30-MAR-2009
01-21-09 | TIME PLOTTED => 08:20

BORDER LAST REVISED 4/11/2008
RELATIVE BORDER SCALE IS IN INCHES 0 1 2 3
USERNAME => trpierce
DGN FILE => c0g9401b001.dgn
CU 12231
EA 0G9401

Dist	COUNTY	ROUTE	POST MILES TOTAL PROJECT	SHEET No.	TOTAL SHEETS
12	Ora	5	1.3/1.7	36	127

Joseph W. Sawtelle 01-22-09
REGISTERED CIVIL ENGINEER DATE

3-23-09
PLANS APPROVAL DATE

REGISTERED PROFESSIONAL ENGINEER
JOSEPH W. SAWTELLE
No. C 60110
Exp. 6/30/10
CIVIL
STATE OF CALIFORNIA

THE STATE OF CALIFORNIA OR ITS OFFICERS OR AGENTS SHALL NOT BE RESPONSIBLE FOR THE ACCURACY OR COMPLETENESS OF SCANNED COPIES OF THIS PLAN SHEET.

ORANGE COUNTY
TRANSPORTATION AUTHORITY
550 SOUTH MAIN STREET
ORANGE, CA 92863

RMC, INC.
6 HUTTON CENTRE DRIVE
SUITE 1250
SANTA ANA, CA 92707

ABBREVIATIONS:

(N) - NOT A SEPARATE PAY ITEM, FOR INFORMATION ONLY
S - STANDARD JOINT TYPE

DRAINAGE SYSTEM NO.	DRAINAGE UNIT NO.	MINOR CONCRETE (COLLAR) CY	MINOR CONCRETE (MINOR STRUCTURE) CY	24" RCP (CLASS IV) LF	REMOVE INLET EA	Misc IRON & STEEL LB	FRAME AND GRATE (N) (TYPE 24-12) EA	PIPE JOINT CLASSIFICATION	HEIGHT OF INLET "H" FT	DESCRIPTION	STATION	DRAINAGE PLAN SHEET NO.	DRAINAGE SYSTEM NO.	DRAINAGE UNIT NO.
1	a		1.54			326	1		3.80	G2 INLET	32.09' Lt 17+22.2 "SB-ON" LINE	D-2	1	a
	b			74				S		24" RCP				b
	c		1.61			326	1		4.02	G2 INLET	26.27' Lt 17+96 "SB-ON" LINE			c
	d	1								CONCRETE COLLAR				d
	e				1					REMOVE G1 INLET	26.27' Lt 17+96 "SB-ON" LINE			e
2	a		1.10			326	1		3.70	G1 INLET	67.90' Lt 101+24 "A" LINE	D-2	2	a
	b	1								CONCRETE COLLAR				b
	c				1					REMOVE G1 INLET	67.90' Lt 101+24 "A" LINE			c
		2	4.25	74	2	978	3			SHEET TOTAL				

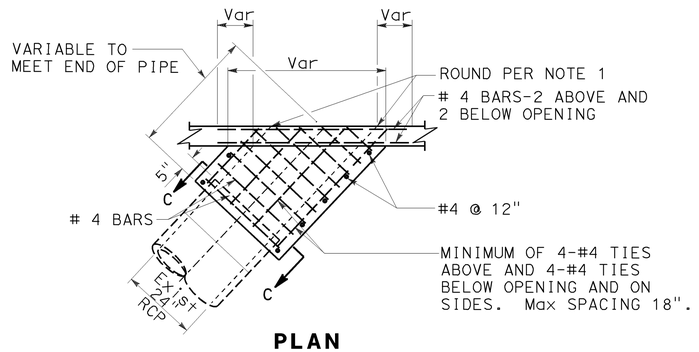

PLAN

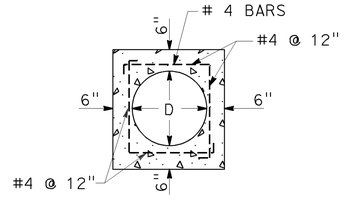

SECTION C-C

NOTES:

1. ROUND EDGE OF OUTLET TO 3" RADIUS.
2. REINFORCEMENT SHALL BE 1½" CLEAR FROM THE FACE OF CONCRETE.
3. A PORTION OF THE EXISTING PIPE SHALL BE REMOVED TO ALLOW CONSTRUCTION OF THE CONCRETE COLLAR AS SHOWN.

CONCRETE COLLAR DETAIL
(CONNECTION OF EXISTING PIPE TO NEW INLET)
NO SCALE

DRAINAGE QUANTITIES AND DRAINAGE DETAILS

DQ-1

REVISED BY | DATE REVISED
C. SOSA | J. SAWTELLE
CALCULATED-DESIGNED BY | CHECKED BY
CONSULTANT FUNCTIONAL SUPERVISOR: JAMAL SALMAN
STATE OF CALIFORNIA - DEPARTMENT OF TRANSPORTATION
Caltrans® DESIGN F

LAST REVISION | DATE PLOTTED => 30-MAR-2009
01-21-09 | TIME PLOTTED => 08:20

BORDER LAST REVISED 4/11/2008
RELATIVE BORDER SCALE IS IN INCHES 0 1 2 3
USERNAME => trpierce
DGN FILE => c0g940id001.dgn
CU 12231
EA 0G9401

Dist	COUNTY	ROUTE	POST MILES TOTAL PROJECT	SHEET No.	TOTAL SHEETS
12	Ora	5	1.3/1.7	37	127

REGISTERED CIVIL ENGINEER — 01-22-09 DATE

JOSEPH W. SAWTELLE No. C 60110 Exp. 6/30/10 CIVIL — REGISTERED PROFESSIONAL ENGINEER — STATE OF CALIFORNIA

3-23-09
PLANS APPROVAL DATE

THE STATE OF CALIFORNIA OR ITS OFFICERS OR AGENTS SHALL NOT BE RESPONSIBLE FOR THE ACCURACY OR COMPLETENESS OF SCANNED COPIES OF THIS PLAN SHEET.

ORANGE COUNTY
TRANSPORTATION AUTHORITY
550 SOUTH MAIN STREET
ORANGE, CA 92863

RMC, INC.
6 HUTTON CENTRE DRIVE
SUITE 1250
SANTA ANA, CA 92707

LEGEND:

- TEMPORARY HYDRAULIC MULCH (BONDED FIBER MATRIX)
- TEMPORARY CONSTRUCTION ENTRANCE
- PCC WASH PCC — TEMPORARY CONCRETE WASHOUT FACILITY
- TEMPORARY DRAINAGE INLET PROTECTION
- FR — TEMPORARY FIBER ROLL

ABBREVIATIONS:

DI - DRAINAGE INLET

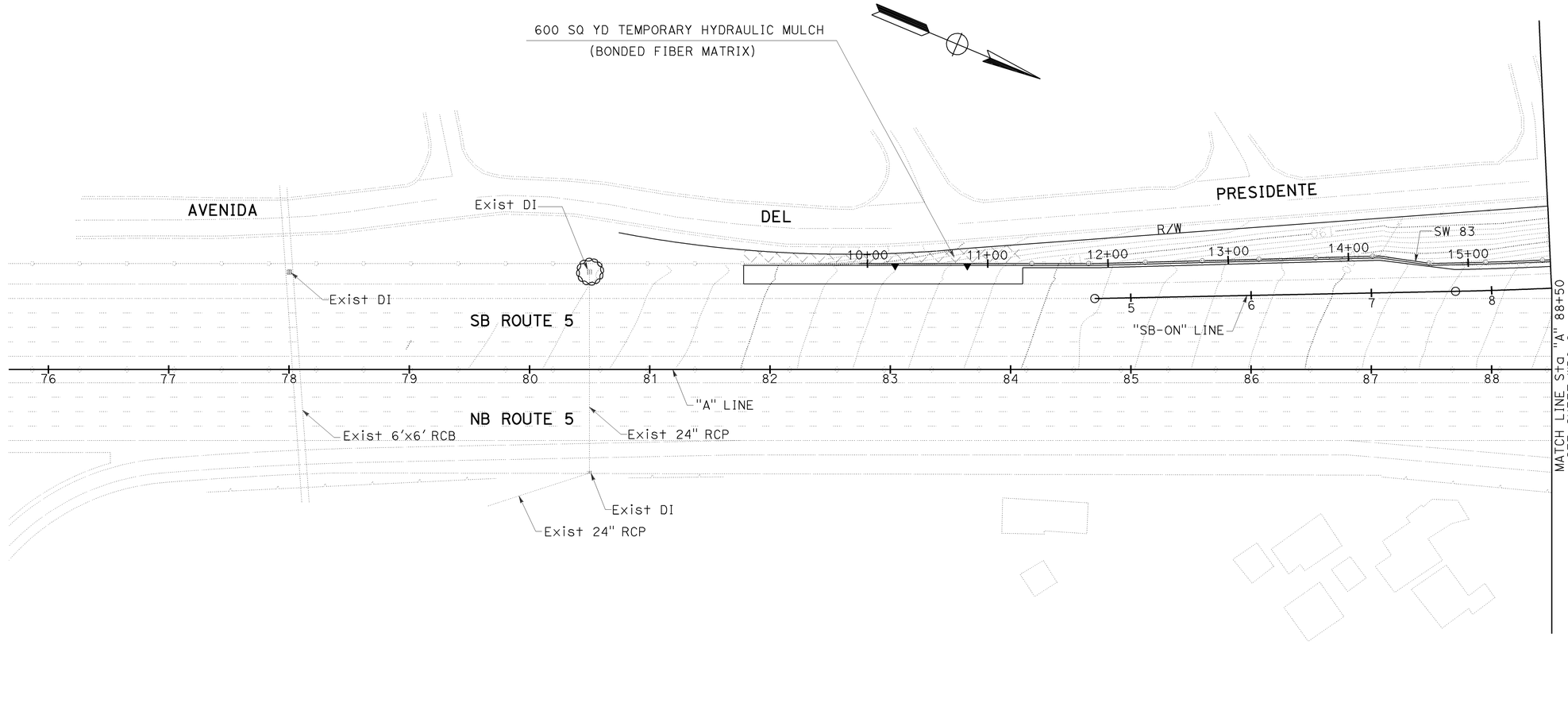

TEMPORARY WATER POLLUTION CONTROL PLAN

SCALE: 1"=50'

WPC-1

THIS PLAN ACCURATE FOR TEMPORARY WATER POLLUTION CONTROL WORK ONLY.

REVISED BY | DATE REVISED
C. SOSA | J. SAWTELLE
CALCULATED-DESIGNED BY | CHECKED BY
JAMAL SALMAN — CONSULTANT FUNCTIONAL SUPERVISOR
DESIGN F
STATE OF CALIFORNIA - DEPARTMENT OF TRANSPORTATION
Caltrans

LAST REVISION 01-20-09 | DATE PLOTTED => 06-APR-2009 | TIME PLOTTED => 15:22

BORDER LAST REVISED 4/11/2008 | RELATIVE BORDER SCALE IS IN INCHES 0 1 2 3 | USERNAME => trpierce | DGN FILE => c0g940gb001.dgn | CU 12231 | EA 0G9401

Dist	COUNTY	ROUTE	POST MILES TOTAL PROJECT	SHEET No.	TOTAL SHEETS
12	Ora	5	1.3/1.7	38	127

Joseph W. Sawtelle 01-22-09
REGISTERED CIVIL ENGINEER DATE

3-23-09
PLANS APPROVAL DATE

REGISTERED PROFESSIONAL ENGINEER — JOSEPH W. SAWTELLE — No. C 60110 — Exp. 6/30/10 — CIVIL — STATE OF CALIFORNIA

THE STATE OF CALIFORNIA OR ITS OFFICERS OR AGENTS SHALL NOT BE RESPONSIBLE FOR THE ACCURACY OR COMPLETENESS OF SCANNED COPIES OF THIS PLAN SHEET.

ORANGE COUNTY
TRANSPORTATION AUTHORITY
550 SOUTH MAIN STREET
ORANGE, CA 92863

RMC, INC.
6 HUTTON CENTRE DRIVE
SUITE 1250
SANTA ANA, CA 92707

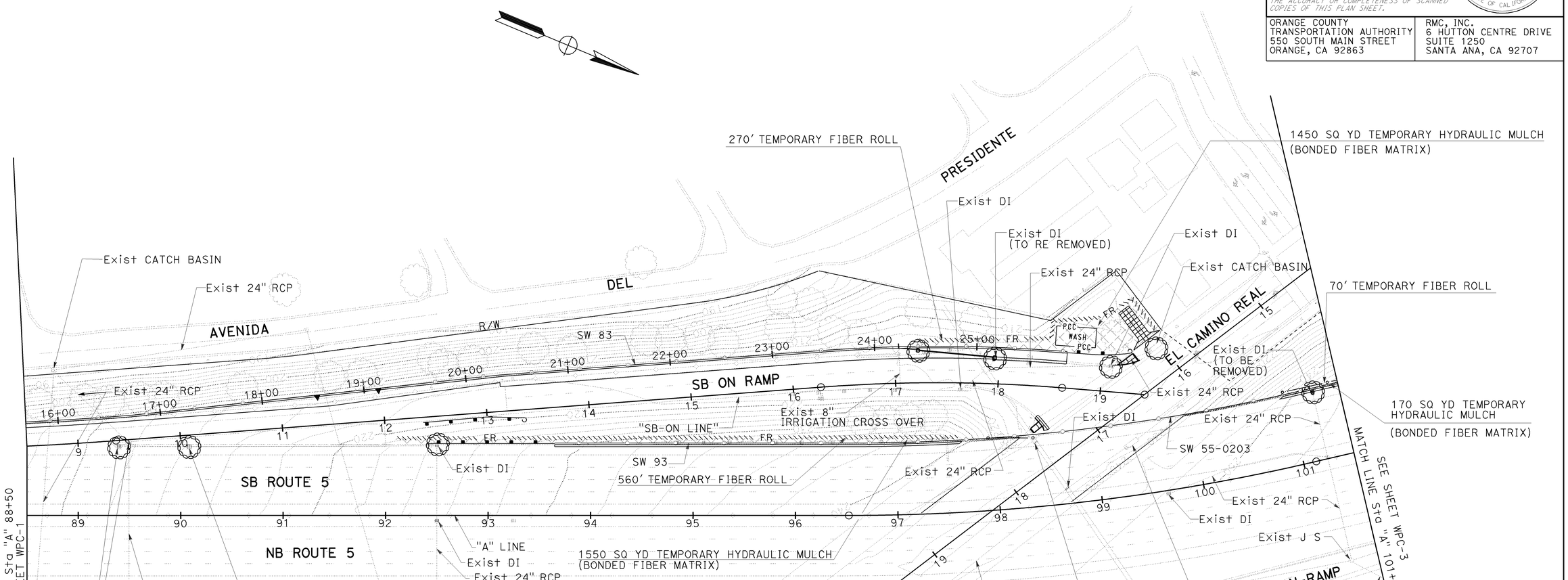

TEMPORARY WATER POLLUTION CONTROL PLAN

SCALE: 1"=50'

WPC-2

THIS PLAN ACCURATE FOR TEMPORARY WATER POLLUTION CONTROL WORK ONLY.

REVISED BY	DATE REVISED

CALCULATED-DESIGNED BY: C. SOSA
CHECKED BY: J. SAWTELLE
CONSULTANT FUNCTIONAL SUPERVISOR: JAMAL SALMAN
STATE OF CALIFORNIA - DEPARTMENT OF TRANSPORTATION
DESIGN F

LAST REVISION: DATE PLOTTED => 30-MAR-2009
01-20-09 TIME PLOTTED => 10:52

BORDER LAST REVISED 4/11/2008

RELATIVE BORDER SCALE IS IN INCHES 0 1 2 3

USERNAME => trmikesl
DGN FILE => c0g940gb002.dgn

CU 12231

EA 0G9401

Dist	COUNTY	ROUTE	POST MILES TOTAL PROJECT	SHEET No.	TOTAL SHEETS
12	Ora	5	1.3/1.7	39	127

Joseph W. Sawtelle 01-22-09
REGISTERED CIVIL ENGINEER DATE

3-23-09
PLANS APPROVAL DATE

REGISTERED PROFESSIONAL ENGINEER
JOSEPH W. SAWTELLE
No. C 60110
Exp. 6/30/10
CIVIL
STATE OF CALIFORNIA

THE STATE OF CALIFORNIA OR ITS OFFICERS OR AGENTS SHALL NOT BE RESPONSIBLE FOR THE ACCURACY OR COMPLETENESS OF SCANNED COPIES OF THIS PLAN SHEET.

ORANGE COUNTY
TRANSPORTATION AUTHORITY
550 SOUTH MAIN STREET
ORANGE, CA 92863

RMC, INC.
6 HUTTON CENTRE DRIVE
SUITE 1250
SANTA ANA, CA 92707

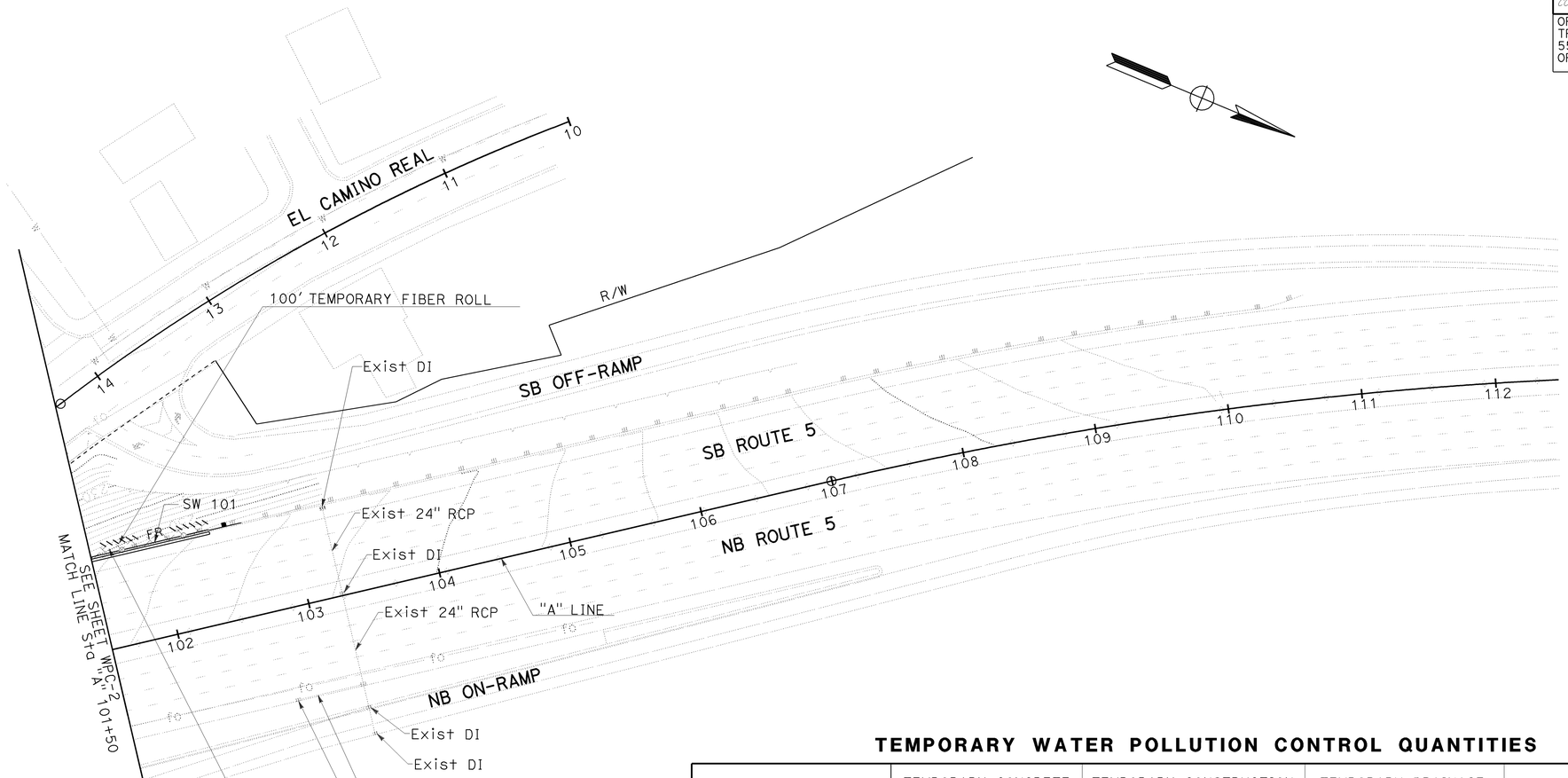

TEMPORARY WATER POLLUTION CONTROL QUANTITIES

TEMPORARY FIBER ROLL	TEMPORARY CONCRETE WASHOUT FACILITY	TEMPORARY CONSTRUCTION ENTRANCE	TEMPORARY DRAINAGE INLET PROTECTION	TEMPORARY HYDRAULIC MULCH (BONDED FIBER MATRIX)
LF	EA	EA	EA	SQYD
1000	1	1	9	4000

TEMPORARY WATER POLLUTION CONTROL PLAN

SCALE: 1"=50'

WPC-3

THIS PLAN ACCURATE FOR TEMPORARY WATER POLLUTION CONTROL WORK ONLY.

STATE OF CALIFORNIA - DEPARTMENT OF TRANSPORTATION
DESIGN F
CONSULTANT FUNCTIONAL SUPERVISOR: JAMAL SALMAN
CALCULATED-DESIGNED BY: C. SOSA
CHECKED BY: J. SAWTELLE
REVISED BY
DATE REVISED

LAST REVISION | DATE PLOTTED => 30-MAR-2009 | TIME PLOTTED => 10:52
01-20-09

BORDER LAST REVISED 4/11/2008
RELATIVE BORDER SCALE IS IN INCHES 0 1 2 3
USERNAME => trmikesl
DGN FILE => c0g940gb003.dgn
CU 12231
EA 0G9401

Dist	COUNTY	ROUTE	POST MILES TOTAL PROJECT	SHEET No.	TOTAL SHEETS
12	Ora	5	1.3/1.7	40	127

Lynn Capouya 01-22-09
REGISTERED LANDSCAPE ARCHITECT DATE

3-23-09
PLANS APPROVAL DATE

LICENSED LANDSCAPE ARCHITECT
LYNN CAPOUYA
Signature
No. 2314
Exp. 12/31/10
01-22-09
Date
STATE OF CALIFORNIA

THE STATE OF CALIFORNIA OR ITS OFFICERS OR AGENTS SHALL NOT BE RESPONSIBLE FOR THE ACCURACY OR COMPLETENESS OF ELECTRONIC COPIES OF THIS PLAN SHEET.

OCTA
550 SOUTH MAIN ST.
ORANGE, CA. 92863

LYNN CAPOUYA, INC.
LANDSCAPE ARCHITECT
2995 AIRWAY AVE.
COSTA MESA, CA. 92626

PLANT LIST AND PLANTING SPECIFICATIONS

UNDERLINED PORTIONS OF BOTANICAL NAME INDICATE ABBREVIATIONS USED ON PLANTING PLANS.

PLANT GROUP	PLANT No	SYMBOL	BOTANICAL NAME	COMMON NAME	SIZE	QUANTITY EACH	HOLE SIZE (Inches) DIA	HOLE SIZE (Inches) DEPTH	BASIN TYPE	IRON SULFATE ①	GYPSUM	SOIL AMEND	COMMERCIAL FERTILIZER ① PLANTING	COMMERCIAL FERTILIZER ① PLT ESTB	BASIN MULCH ① ③	STAKING	PLANTING LIMITS MINIMUM DISTANCE (FT) FROM TRVD WAY	PVMT	FENCE	WALL	PAVED DITCH	EARTH DITCH	ON CENTER (FEET)	REMARKS
A	1		PARTHENOCISSUS TRICUSPIDATA	BOSTON IVY	No. 1	140	16	12	11	0.32 lbs	0.32 lbs	0.05 CY	0.25 lbs	0.24 lbs	0.03 CY	-	-	-	-	13	15	④	VINE
F	2		MYOPORUM PARVIFOLIUM	PROSTRATE MYOPORUM	FLATS	3800	②	②	-	-	26 lbs / 1000sf	-	18 LBS / 1000 SQFT	15 LBS / 1000 SQFT	-	-	-	6	6	6	6	8	1.5	GROUNDCOVER
U	3	⊙	TABEBUIA IMPETIGINOSA	PINK TRUMPET TREE	No. 15	3	24	24	11	0.44 LBS	0.44 lbs	0.08 CY	0.44 LBS	0.55 LBS	0.13 CY	⑥	30	-	10	10	10	12	④	TREE

APPLICABLE WHEN CIRCLED:

① - Quantities shown are "per plant" unless shown as ft^2 application rates.
② - 2x DIAMETER OF ROOTBALL, SAME DEPTH AS ROOTBALL
③ - Does not apply to mulch areas.
④ - As shown on plans.
5 - Unless otherwise shown on plans.
⑥ - See detail.
7 - See Caltrans Standard Detail
8 - Backfill Mix (per 10 yd^3):
$6y^3$ Native Amended Topsoil
$4y^3$ Nitrolized Organic Shavings
Fertilizer Tablets per Specifications
9 - Soil Amendments (per 100 yd^3):
3 yd^3 Nitrolized Organic Amendment
Granular Fertilizer

NOTE:

1. UNDERLINED PORTIONS OF BOTANICAL NAMES INDICATE ABBREVIATIONS USED ON PLANTING PLANS.

LEGEND:

REMOVE Exist PLANTS

MAINTAIN Exist PLANTING AREA

MULCH

Exist TREE TO REMAIN

PRUNE Exist TREE

REVISED BY | DATE REVISED
K. QUINN | T. MANN
CALCULATED-DESIGNED BY | CHECKED BY
CONSULTANT FUNCTIONAL SUPERVISOR: LYNN CAPOUYA
STATE OF CALIFORNIA - DEPARTMENT OF TRANSPORTATION
Caltrans LANDSCAPE ARCHITECT

PLANT LIST

PL-1

LAST REVISION | DATE PLOTTED => 30-MAR-2009
TIME PLOTTED => 08:21

BORDER LAST REVISED 3/1/2007

RELATIVE BORDER SCALE IS IN INCHES 0 50 100 150

USERNAME => trpierce
DGN FILE => c0g940te001.dgn

CU 12231

EA 0G9401

Dist	COUNTY	ROUTE	POST MILES TOTAL PROJECT	SHEET No.	TOTAL SHEETS
12	Ora	5	1.3/1.7	41	127

01-22-09
REGISTERED LANDSCAPE ARCHITECT DATE

LICENSED LANDSCAPE ARCHITECT
LYNN CAPOUYA
Signature
No. 2314
Exp. 12/31/10
01-22-09
Date
STATE OF CALIFORNIA

3-23-09
PLANS APPROVAL DATE

THE STATE OF CALIFORNIA OR ITS OFFICERS OR AGENTS SHALL NOT BE RESPONSIBLE FOR THE ACCURACY OR COMPLETENESS OF ELECTRONIC COPIES OF THIS PLAN SHEET.

OCTA
550 SOUTH MAIN ST.
ORANGE, CA. 92863

LYNN CAPOUYA, INC.
LANDSCAPE ARCHITECT
2995 AIRWAY AVE.
COSTA MESA, CA. 92626

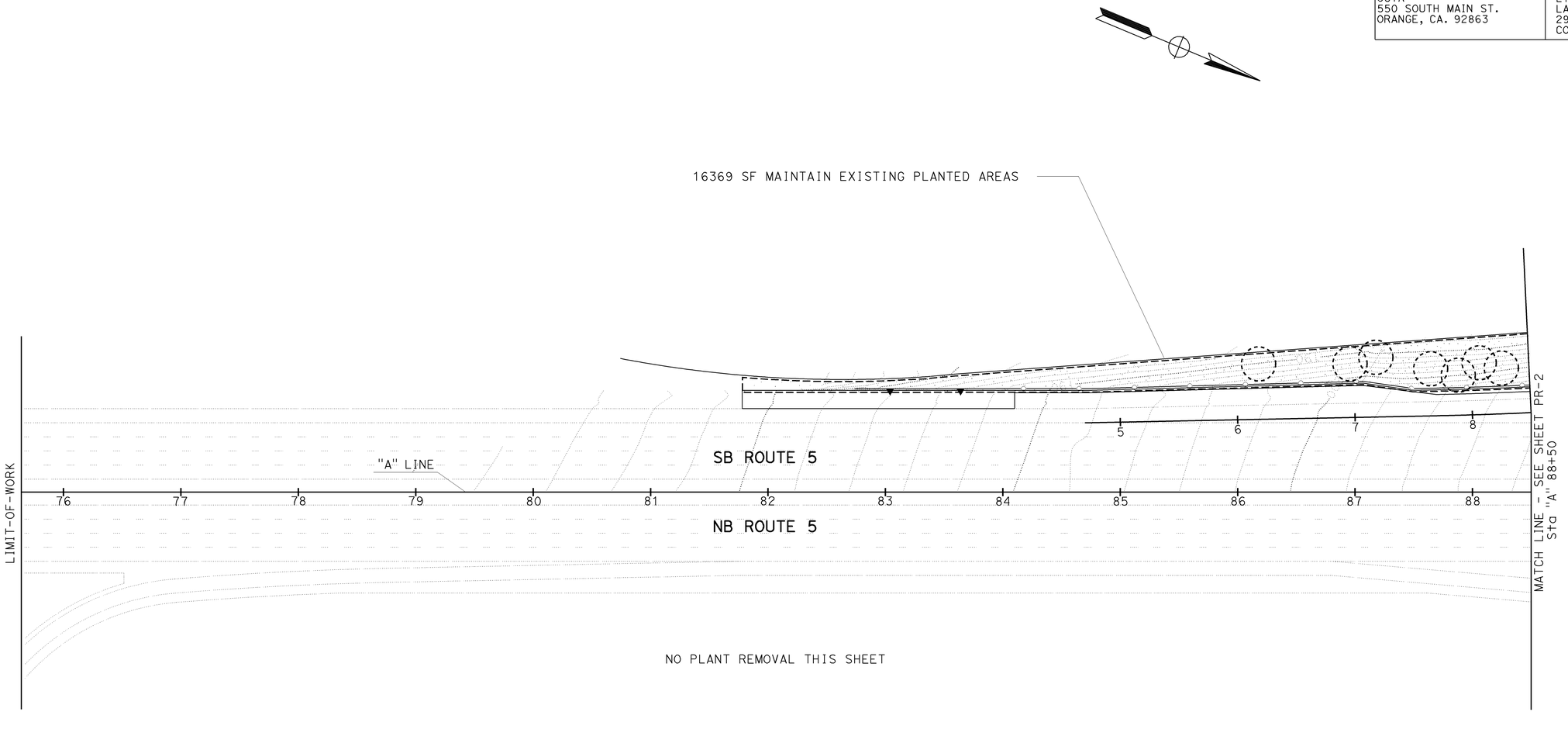

NO PLANT REMOVAL THIS SHEET

THIS PLAN ACCURATE FOR PLANT REMOVAL WORK ONLY

PLANT REMOVAL PLAN

SCALE: 1"=50'

PR-1

REVISED BY | DATE REVISED
K. QUINN | T. MANN
CALCULATED-DESIGNED BY | CHECKED BY
CONSULTANT FUNCTIONAL SUPERVISOR
LYNN CAPOUYA
STATE OF CALIFORNIA - DEPARTMENT OF TRANSPORTATION
Caltrans LANDSCAPE ARCHITECT

LAST REVISION | DATE PLOTTED => 30-MAR-2009
TIME PLOTTED => 08:21
01-21-09

BORDER LAST REVISED 3/1/2007
RELATIVE BORDER SCALE IS IN INCHES 0 50 100 150
USERNAME => trpierce
DGN FILE => c0g940tf001.dgn
CU 12231
EA 0G9401

Dist	COUNTY	ROUTE	POST MILES TOTAL PROJECT	SHEET No.	TOTAL SHEETS
12	Ora	5	1.3/1.7	42	127

01-22-09
REGISTERED LANDSCAPE ARCHITECT DATE

LICENSED LANDSCAPE ARCHITECT
LYNN CAPOUYA
Signature
No. 2314
Exp. 12/31/10
01-22-09
Date
STATE OF CALIFORNIA

3-23-09
PLANS APPROVAL DATE

THE STATE OF CALIFORNIA OR ITS OFFICERS OR AGENTS SHALL NOT BE RESPONSIBLE FOR THE ACCURACY OR COMPLETENESS OF ELECTRONIC COPIES OF THIS PLAN SHEET.

OCTA
550 SOUTH MAIN ST.
ORANGE, CA. 92863

LYNN CAPOUYA, INC.
LANDSCAPE ARCHITECT
2995 AIRWAY AVE.
COSTA MESA, CA. 92626

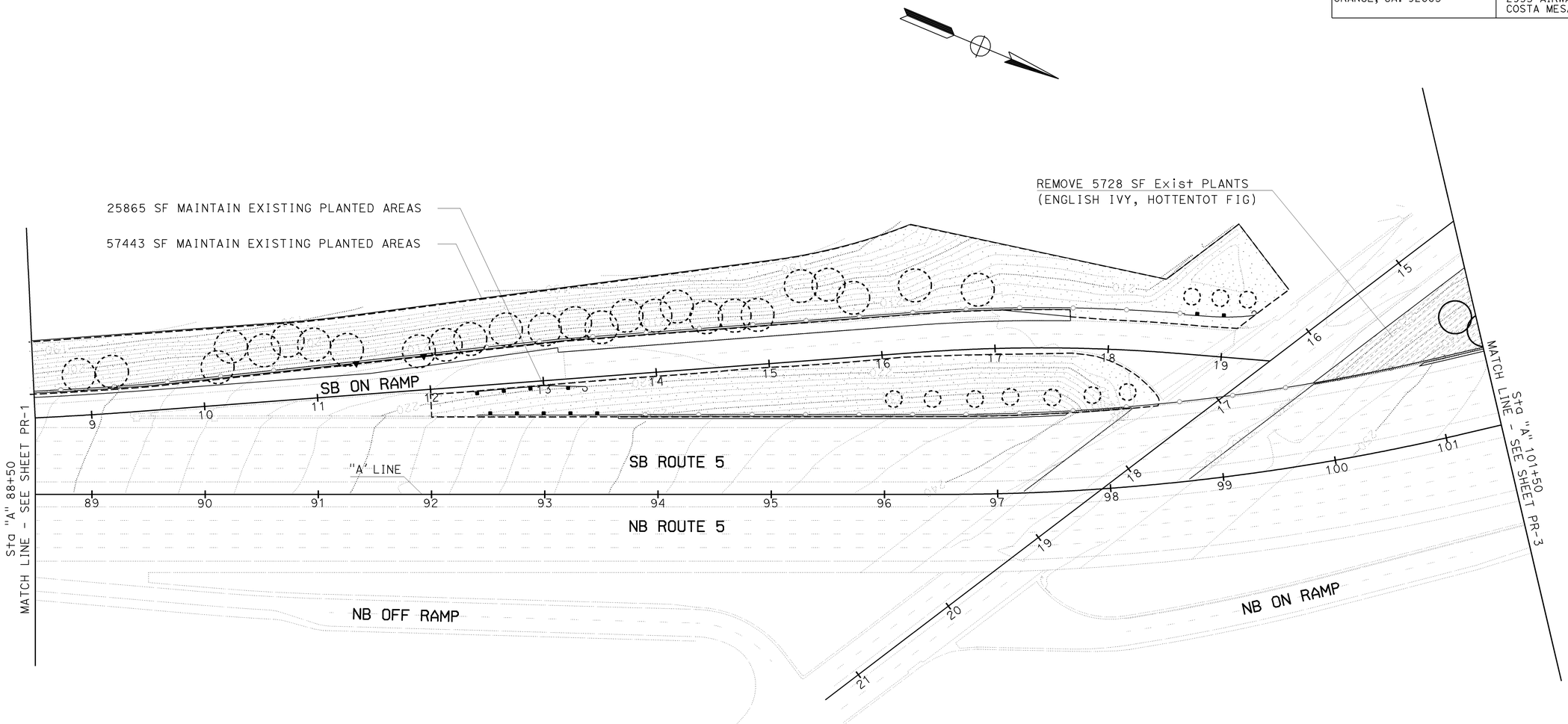

THIS PLAN ACCURATE FOR PLANT REMOVAL WORK ONLY

PLANT REMOVAL PLAN

SCALE: 1"=50'

PR-2

LAST REVISION DATE PLOTTED => 30-MAR-2009
01-21-09 TIME PLOTTED => 08:21

REVISED BY | DATE REVISED
K. QUINN | T. MANN
CALCULATED-DESIGNED BY | CHECKED BY
CONSULTANT FUNCTIONAL SUPERVISOR
LYNN CAPOUYA
STATE OF CALIFORNIA - DEPARTMENT OF TRANSPORTATION
Caltrans LANDSCAPE ARCHITECT

BORDER LAST REVISED 3/1/2007

RELATIVE BORDER SCALE IS IN INCHES 0 50 100 150

USERNAME => trpierce
DGN FILE => c0g940tf002.dgn

CU 12231

EA 0G9401

Dist	COUNTY	ROUTE	POST MILES TOTAL PROJECT	SHEET No.	TOTAL SHEETS
12	Ora	5	1.3/1.7	43	127

REGISTERED LANDSCAPE ARCHITECT — 01-22-09 DATE

LICENSED LANDSCAPE ARCHITECT — LYNN CAPOUYA — Signature — No. 2314 — Exp. 12/31/10 — 01-22-09 Date — STATE OF CALIFORNIA

3-23-09
PLANS APPROVAL DATE

THE STATE OF CALIFORNIA OR ITS OFFICERS OR AGENTS SHALL NOT BE RESPONSIBLE FOR THE ACCURACY OR COMPLETENESS OF ELECTRONIC COPIES OF THIS PLAN SHEET.

OCTA
550 SOUTH MAIN ST.
ORANGE, CA. 92863

LYNN CAPOUYA, INC.
LANDSCAPE ARCHITECT
2995 AIRWAY AVE.
COSTA MESA, CA. 92626

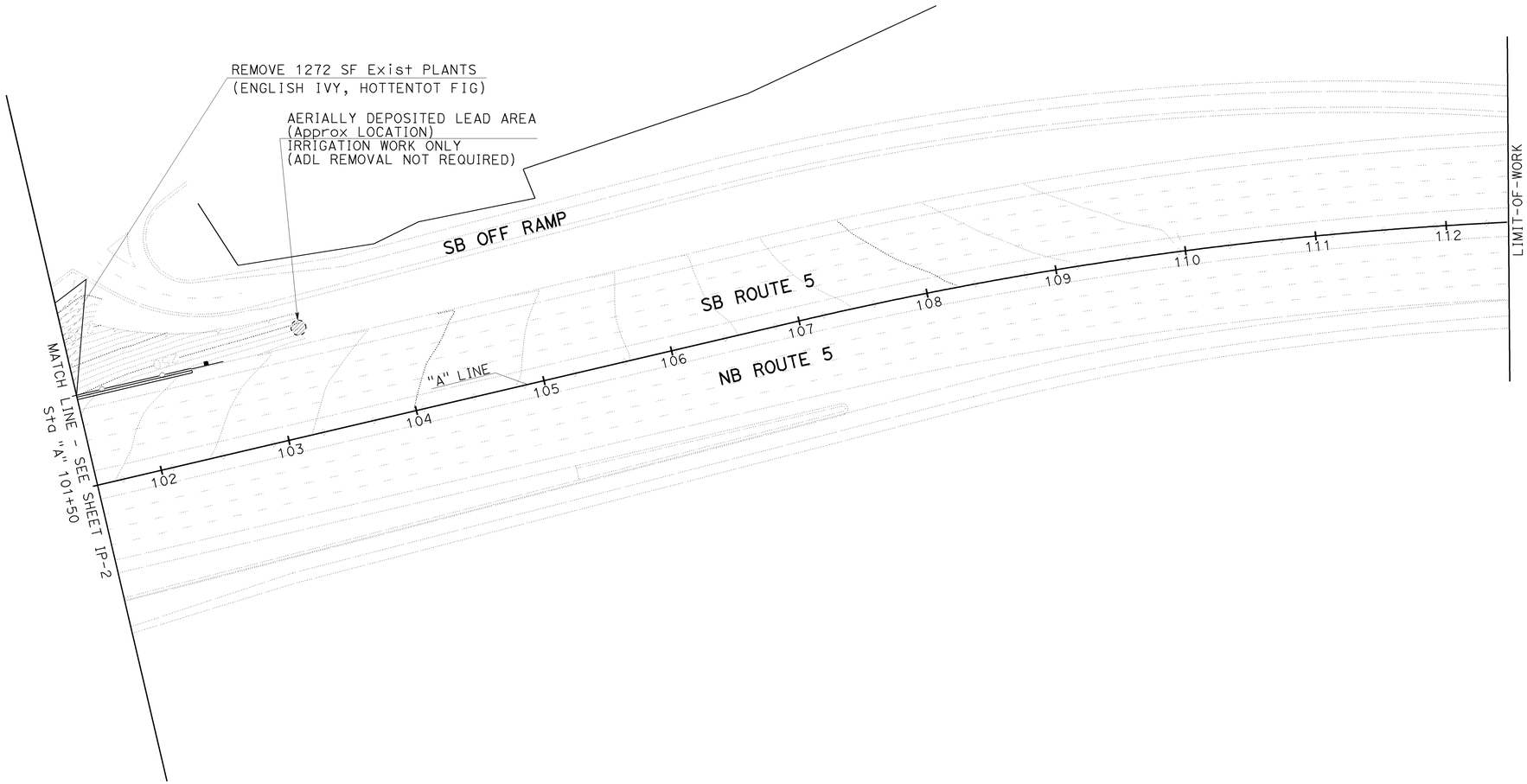

THIS PLAN ACCURATE FOR PLANT REMOVAL WORK ONLY

PLANT REMOVAL PLAN

SCALE: 1"=50'

PR-3

REVISED BY	DATE REVISED

CALCULATED-DESIGNED BY: K. QUINN
CHECKED BY: T. MANN

CONSULTANT FUNCTIONAL SUPERVISOR: LYNN CAPOUYA

STATE OF CALIFORNIA - DEPARTMENT OF TRANSPORTATION
Caltrans LANDSCAPE ARCHITECT

LAST REVISION DATE PLOTTED => 30-MAR-2009
TIME PLOTTED => 05:31

BORDER LAST REVISED 3/1/2007

RELATIVE BORDER SCALE IS IN INCHES 0 50 100 150

USERNAME => trstrk
DGN FILE => c0g940tf003.dgn

CU 12231

EA 0G9401

Dist	COUNTY	ROUTE	POST MILES TOTAL PROJECT	SHEET No.	TOTAL SHEETS
12	Ora	5	1.3/1.7	44	127

01-22-09
REGISTERED LANDSCAPE ARCHITECT DATE

LICENSED LANDSCAPE ARCHITECT
LYNN CAPOUYA
Signature
No. 2314
Exp. 12/31/10
01-22-09
Date
STATE OF CALIFORNIA

3-23-09
PLANS APPROVAL DATE

THE STATE OF CALIFORNIA OR ITS OFFICERS OR AGENTS SHALL NOT BE RESPONSIBLE FOR THE ACCURACY OR COMPLETENESS OF ELECTRONIC COPIES OF THIS PLAN SHEET.

OCTA
550 SOUTH MAIN ST.
ORANGE, CA. 92863

LYNN CAPOUYA, INC.
LANDSCAPE ARCHITECT
2995 AIRWAY AVE.
COSTA MESA, CA. 92626

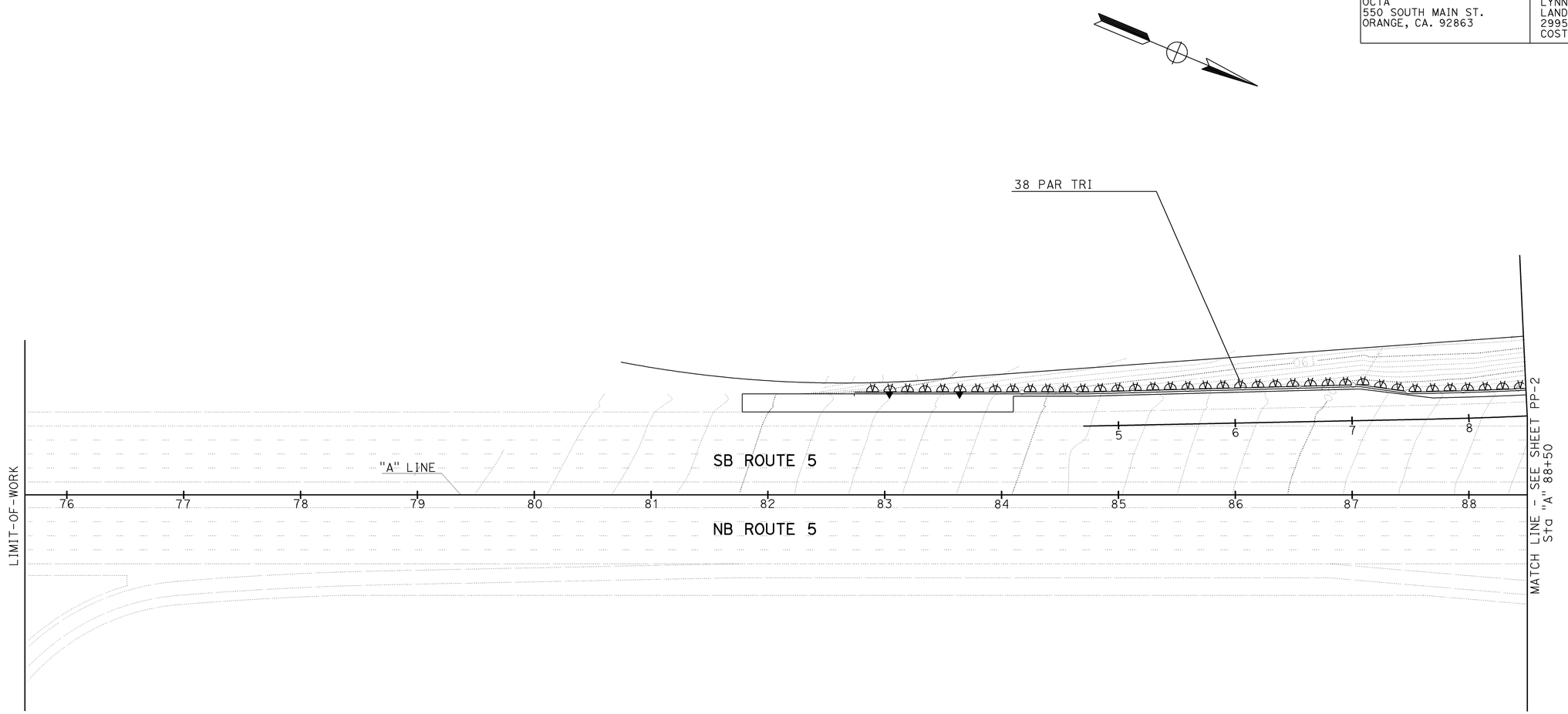

THIS PLAN ACCURATE FOR PLANTING WORK ONLY

PLANTING PLAN

SCALE: 1"=50'

PP-1

REVISED BY	DATE REVISED

CALCULATED-DESIGNED BY: K. QUINN
CHECKED BY: T. MANN

CONSULTANT FUNCTIONAL SUPERVISOR: LYNN CAPOUYA

STATE OF CALIFORNIA - DEPARTMENT OF TRANSPORTATION
Caltrans LANDSCAPE ARCHITECT

LAST REVISION: DATE PLOTTED => 30-MAR-2009
01-21-09 TIME PLOTTED => 05:31

BORDER LAST REVISED 3/1/2007

RELATIVE BORDER SCALE IS IN INCHES 0 50 100 150

USERNAME => trstrk
DGN FILE => c0g940ti001.dgn

CU 12231

EA 0G9401

Dist	COUNTY	ROUTE	POST MILES TOTAL PROJECT	SHEET No.	TOTAL SHEETS
12	Ora	5	1.3/1.7	45	127

REGISTERED LANDSCAPE ARCHITECT — 01-22-09 DATE

LICENSED LANDSCAPE ARCHITECT — LYNN CAPOUYA — Signature — No. 2314 — Exp. 12/31/10 — 01-22-09 Date — STATE OF CALIFORNIA

3-23-09
PLANS APPROVAL DATE

THE STATE OF CALIFORNIA OR ITS OFFICERS OR AGENTS SHALL NOT BE RESPONSIBLE FOR THE ACCURACY OR COMPLETENESS OF ELECTRONIC COPIES OF THIS PLAN SHEET.

OCTA
550 SOUTH MAIN ST.
ORANGE, CA. 92863

LYNN CAPOUYA, INC.
LANDSCAPE ARCHITECT
2995 AIRWAY AVE.
COSTA MESA, CA. 92626

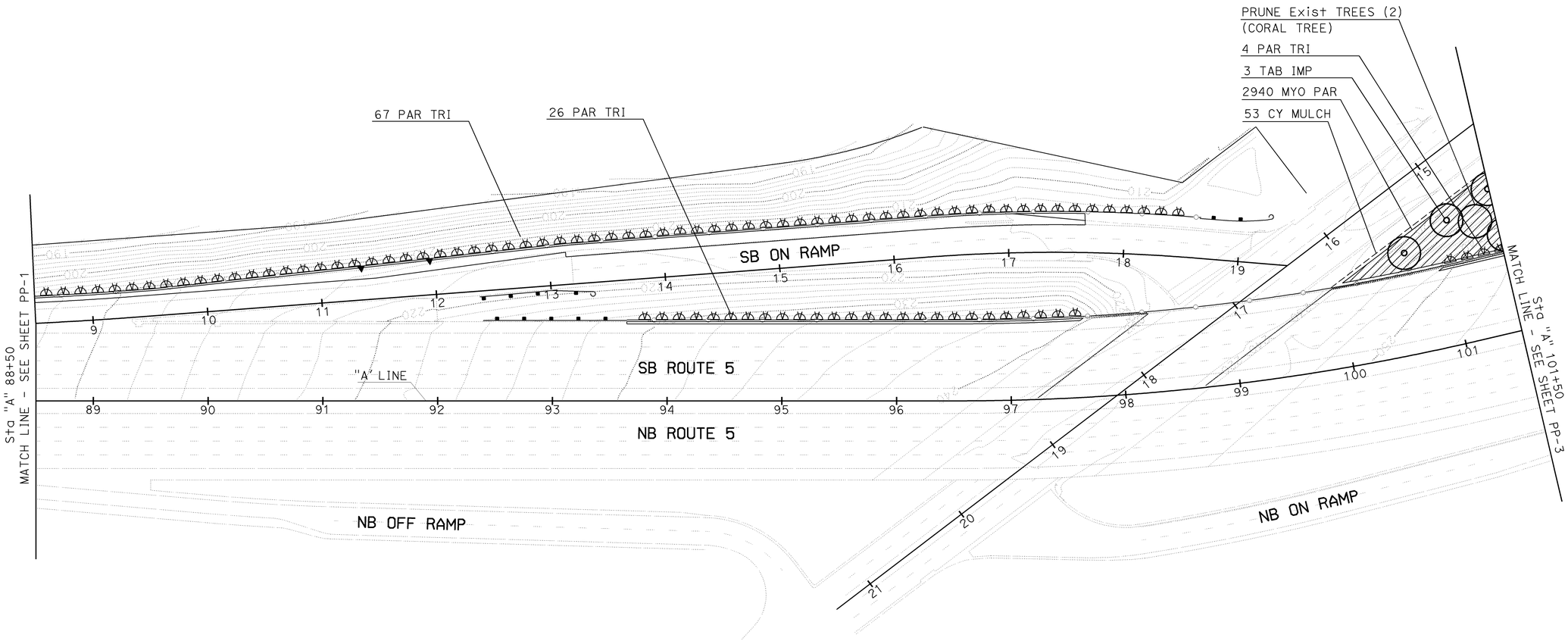

PLANTING PLAN

SCALE: 1"=50'

PP-2

THIS PLAN ACCURATE FOR PLANTING WORK ONLY

STATE OF CALIFORNIA - DEPARTMENT OF TRANSPORTATION
Caltrans LANDSCAPE ARCHITECT
CONSULTANT FUNCTIONAL SUPERVISOR: LYNN CAPOUYA
CALCULATED-DESIGNED BY: K. QUINN
CHECKED BY: T. MANN
REVISED BY
DATE REVISED

LAST REVISION DATE PLOTTED => 30-MAR-2009
TIME PLOTTED => 05:40
01-21-09

BORDER LAST REVISED 3/1/2007

RELATIVE BORDER SCALE IS IN INCHES 0 50 100 150

USERNAME => trstrk
DGN FILE => c0g940ti002.dgn

CU 12231

EA 0G9401

Dist	COUNTY	ROUTE	POST MILES TOTAL PROJECT	SHEET No.	TOTAL SHEETS
12	Ora	5	1.3/1.7	46	127

REGISTERED LANDSCAPE ARCHITECT — 01-22-09 DATE

LICENSED LANDSCAPE ARCHITECT — LYNN CAPOUYA — Signature — No. 2314 — Exp. 12/31/10 — 01-22-09 Date — STATE OF CALIFORNIA

3-23-09
PLANS APPROVAL DATE

THE STATE OF CALIFORNIA OR ITS OFFICERS OR AGENTS SHALL NOT BE RESPONSIBLE FOR THE ACCURACY OR COMPLETENESS OF ELECTRONIC COPIES OF THIS PLAN SHEET.

OCTA
550 SOUTH MAIN ST.
ORANGE, CA. 92863

LYNN CAPOUYA, INC.
LANDSCAPE ARCHITECT
2995 AIRWAY AVE.
COSTA MESA, CA. 92626

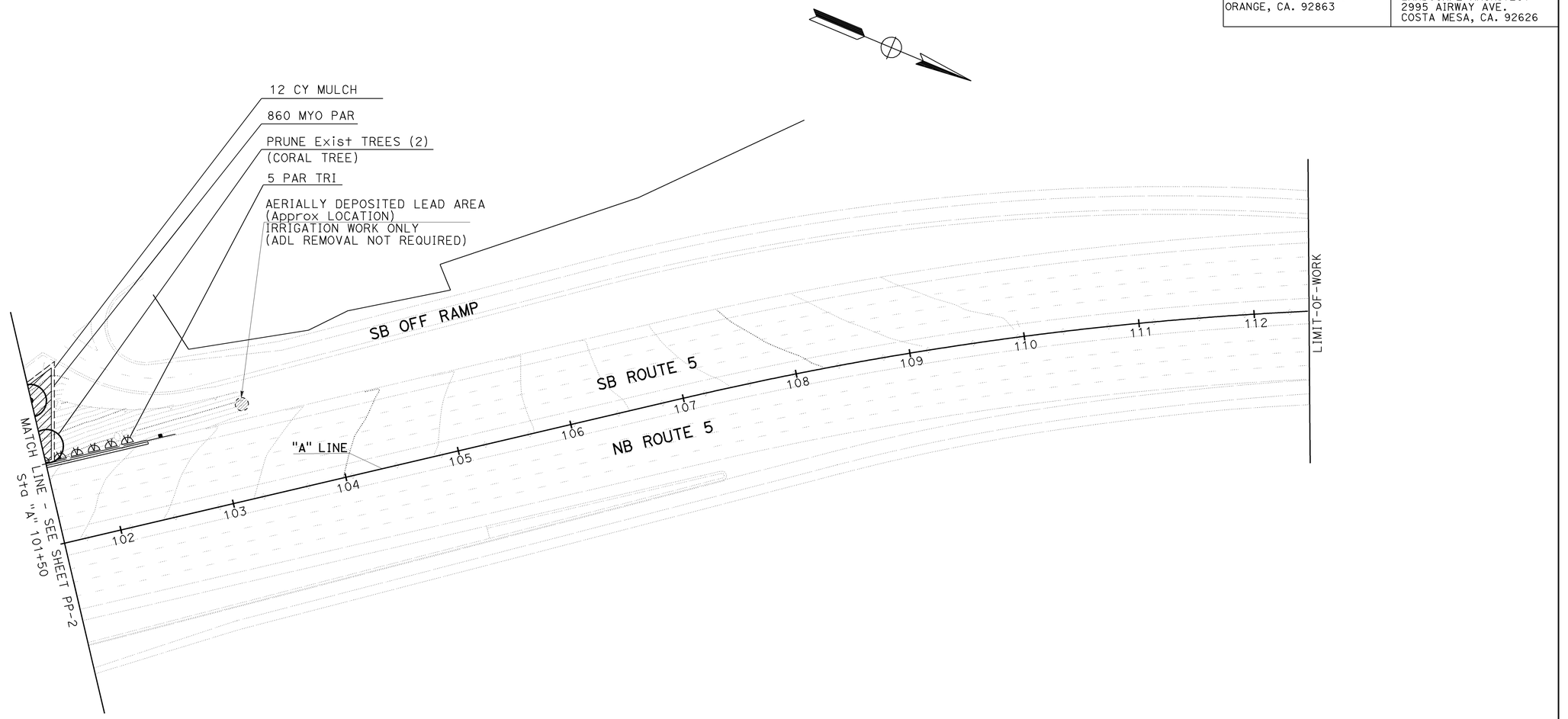

THIS PLAN ACCURATE FOR PLANTING WORK ONLY

PLANTING PLAN

SCALE: 1"=50'

PP-3

REVISED BY | DATE REVISED
K. QUINN | T. MANN
CALCULATED-DESIGNED BY | CHECKED BY

CONSULTANT FUNCTIONAL SUPERVISOR: LYNN CAPOUYA

STATE OF CALIFORNIA - DEPARTMENT OF TRANSPORTATION
Caltrans **LANDSCAPE ARCHITECT**

LAST REVISION | DATE PLOTTED => 30-MAR-2009 | TIME PLOTTED => 05:43
01-21-09

BORDER LAST REVISED 3/1/2007

RELATIVE BORDER SCALE IS IN INCHES 0 50 100 150

USERNAME => trstrk
DGN FILE => c0g940ti003.dgn

CU 12231 | EA 0G9401

Dist	COUNTY	ROUTE	POST MILES TOTAL PROJECT	SHEET No.	TOTAL SHEETS
12	Ora	5	1.3/1.7	47	127

01-22-09
REGISTERED LANDSCAPE ARCHITECT DATE

LICENSED LANDSCAPE ARCHITECT
LYNN CAPOUYA
Signature
No. 2314
Exp. 12/31/10
01-22-09
Date
STATE OF CALIFORNIA

3-23-09
PLANS APPROVAL DATE

THE STATE OF CALIFORNIA OR ITS OFFICERS OR AGENTS SHALL NOT BE RESPONSIBLE FOR THE ACCURACY OR COMPLETENESS OF ELECTRONIC COPIES OF THIS PLAN SHEET.

OCTA
550 SOUTH MAIN ST.
ORANGE, CA. 92863

LYNN CAPOUYA, INC.
LANDSCAPE ARCHITECT
2995 AIRWAY AVE.
COSTA MESA, CA. 92626

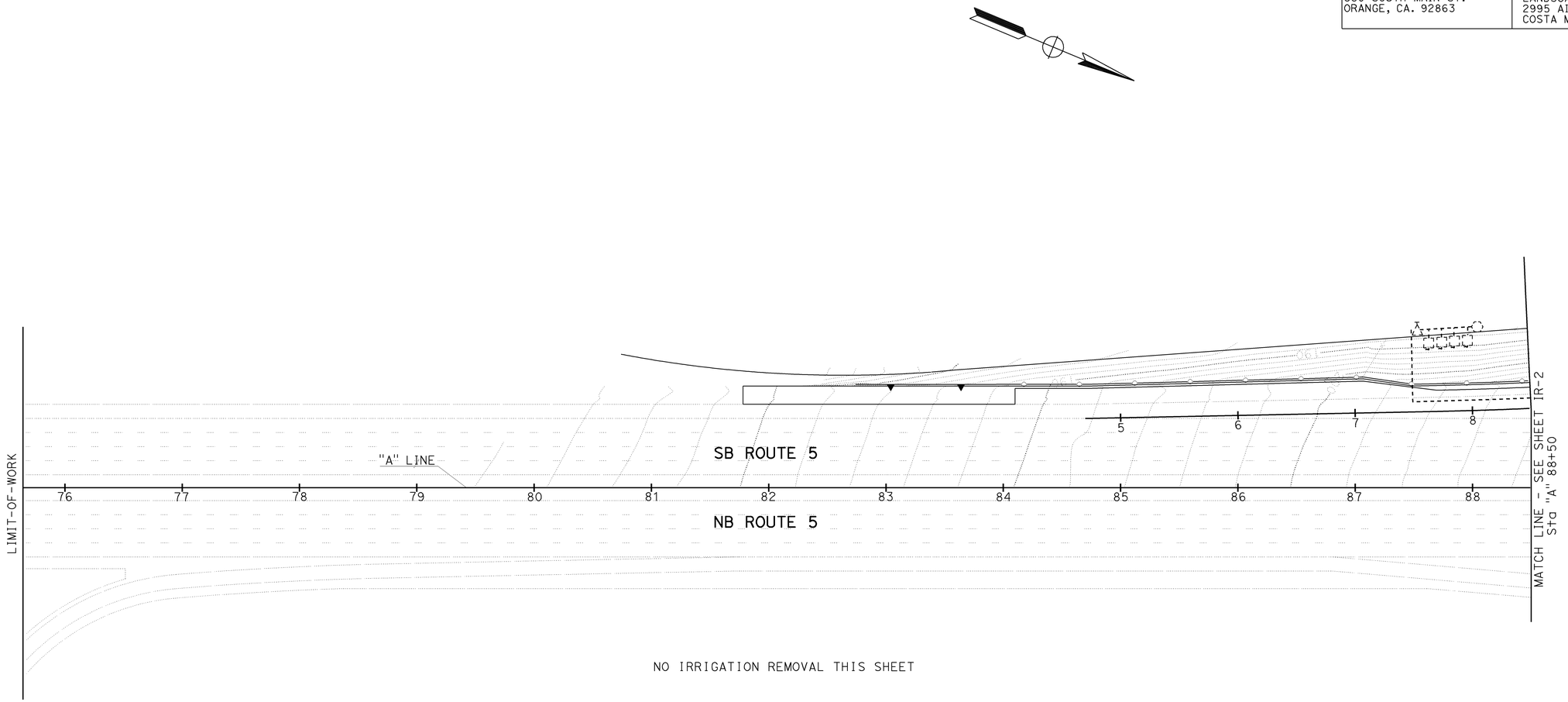

NO IRRIGATION REMOVAL THIS SHEET

IRRIGATION REMOVAL PLAN

SCALE: 1"=50'

IR-1

THIS PLAN ACCURATE FOR IRRIGATION REMOVAL WORK ONLY

REVISED BY	DATE REVISED

CALCULATED-DESIGNED BY: K. QUINN
CHECKED BY: T. MANN

CONSULTANT FUNCTIONAL SUPERVISOR: LYNN CAPOUYA

STATE OF CALIFORNIA - DEPARTMENT OF TRANSPORTATION
Caltrans LANDSCAPE ARCHITECT

LAST REVISION DATE PLOTTED => 30-MAR-2009
01-21-09 TIME PLOTTED => 05:31

BORDER LAST REVISED 3/1/2007

RELATIVE BORDER SCALE IS IN INCHES 0 50 100 150

USERNAME => trstrk
DGN FILE => c0g940tk001.dgn

CU 12231

EA 0G9401

Dist	COUNTY	ROUTE	POST MILES TOTAL PROJECT	SHEET No.	TOTAL SHEETS
12	Ora	5	1.3/1.7	48	127

01-22-09
REGISTERED LANDSCAPE ARCHITECT DATE

LICENSED LANDSCAPE ARCHITECT
LYNN CAPOUYA
Signature
No. 2314
Exp. 12/31/10
01-22-09
Date
STATE OF CALIFORNIA

3-23-09
PLANS APPROVAL DATE

THE STATE OF CALIFORNIA OR ITS OFFICERS OR AGENTS SHALL NOT BE RESPONSIBLE FOR THE ACCURACY OR COMPLETENESS OF ELECTRONIC COPIES OF THIS PLAN SHEET.

OCTA
550 SOUTH MAIN ST.
ORANGE, CA. 92863

LYNN CAPOUYA, INC.
LANDSCAPE ARCHITECT
2995 AIRWAY AVE.
COSTA MESA, CA. 92626

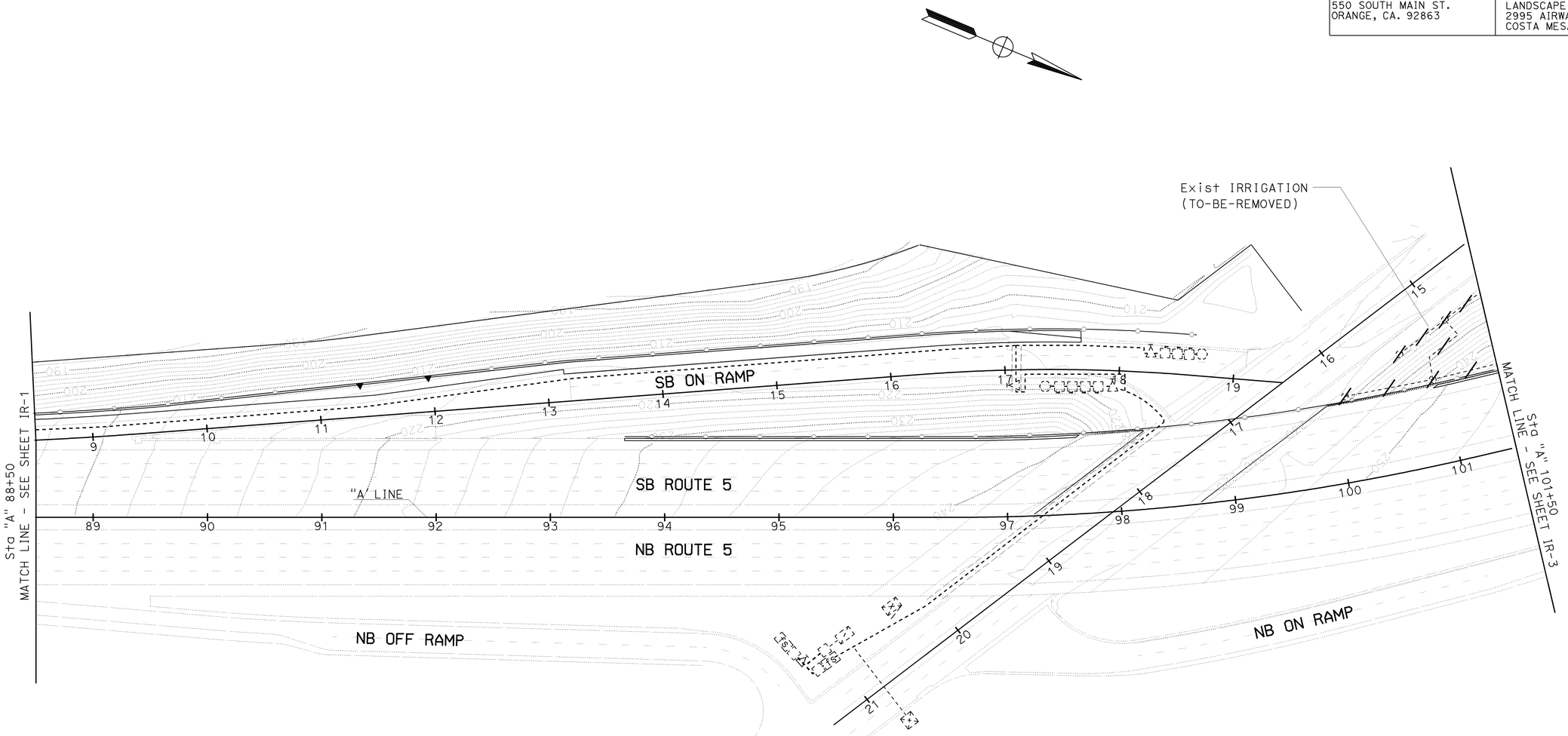

THIS PLAN ACCURATE FOR IRRIGATION REMOVAL WORK ONLY

IRRIGATION REMOVAL PLAN

SCALE: 1"=50'

IR-2

REVISED BY	DATE REVISED

K. QUINN — CALCULATED-DESIGNED BY
T. MANN — CHECKED BY
LYNN CAPOUYA — CONSULTANT FUNCTIONAL SUPERVISOR

STATE OF CALIFORNIA - DEPARTMENT OF TRANSPORTATION
Caltrans LANDSCAPE ARCHITECT

LAST REVISION DATE PLOTTED => 30-MAR-2009
01-21-09 TIME PLOTTED => 05:31

BORDER LAST REVISED 3/1/2007

RELATIVE BORDER SCALE IS IN INCHES 0 50 100 150

USERNAME => trstrk
DGN FILE => c0g940tk002.dgn

CU 12231

EA 0G9401

Dist	COUNTY	ROUTE	POST MILES TOTAL PROJECT	SHEET No.	TOTAL SHEETS
12	Ora	5	1.3/1.7	49	127

REGISTERED LANDSCAPE ARCHITECT 01-22-09 DATE

3-23-09
PLANS APPROVAL DATE

LICENSED LANDSCAPE ARCHITECT LYNN CAPOUYA Signature No. 2314 Exp. 12/31/10 01-22-09 Date STATE OF CALIFORNIA

THE STATE OF CALIFORNIA OR ITS OFFICERS OR AGENTS SHALL NOT BE RESPONSIBLE FOR THE ACCURACY OR COMPLETENESS OF ELECTRONIC COPIES OF THIS PLAN SHEET.

OCTA
550 SOUTH MAIN ST.
ORANGE, CA. 92863

LYNN CAPOUYA, INC.
LANDSCAPE ARCHITECT
2995 AIRWAY AVE.
COSTA MESA, CA. 92626

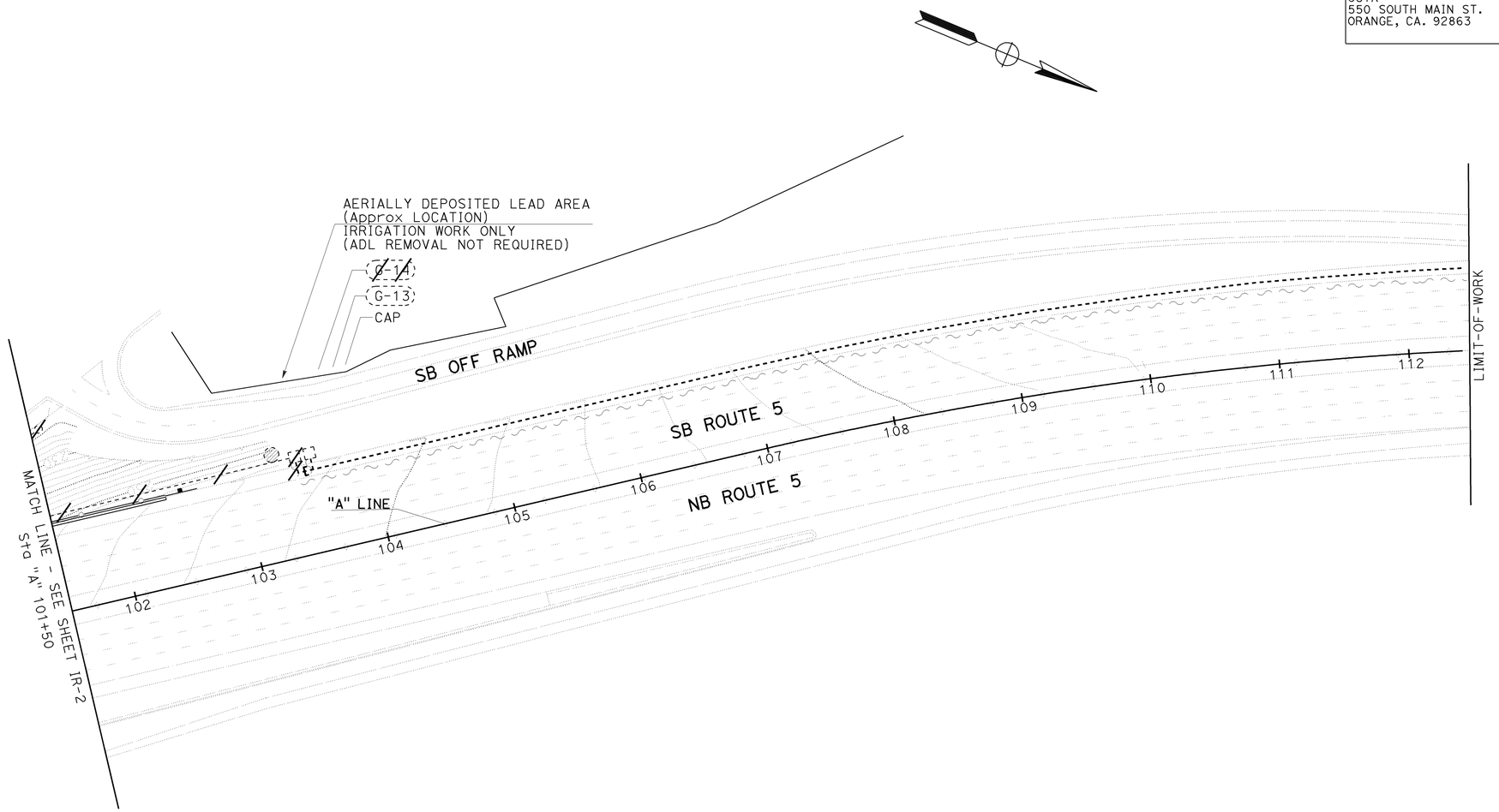

IRRIGATION REMOVAL PLAN

THIS PLAN ACCURATE FOR IRRIGATION REMOVAL WORK ONLY

SCALE: 1"=50'

IR-3

STATE OF CALIFORNIA - DEPARTMENT OF TRANSPORTATION
Caltrans LANDSCAPE ARCHITECT

CONSULTANT FUNCTIONAL SUPERVISOR: LYNN CAPOUYA
CALCULATED-DESIGNED BY: K. QUINN
CHECKED BY: T. MANN
REVISED BY
DATE REVISED

LAST REVISION 01-21-09
DATE PLOTTED => 30-MAR-2009
TIME PLOTTED => 05:31

BORDER LAST REVISED 3/1/2007
RELATIVE BORDER SCALE IS IN INCHES 0 50 100 150
USERNAME => trstrk
DGN FILE => c0g940tk003.dgn
CU 12231
EA 0G9401

Dist	COUNTY	ROUTE	POST MILES TOTAL PROJECT	SHEET No.	TOTAL SHEETS
12	Ora	5	1.3/1.7	50	127

REGISTERED LANDSCAPE ARCHITECT — 01-22-09 DATE

LICENSED LANDSCAPE ARCHITECT — LYNN CAPOUYA — Signature — No. 2314 — Exp. 12/31/10 — 01-22-09 Date — STATE OF CALIFORNIA

3-23-09
PLANS APPROVAL DATE

THE STATE OF CALIFORNIA OR ITS OFFICERS OR AGENTS SHALL NOT BE RESPONSIBLE FOR THE ACCURACY OR COMPLETENESS OF ELECTRONIC COPIES OF THIS PLAN SHEET.

OCTA
550 SOUTH MAIN ST.
ORANGE, CA. 92863

LYNN CAPOUYA, INC.
LANDSCAPE ARCHITECT
2995 AIRWAY AVE.
COSTA MESA, CA. 92626

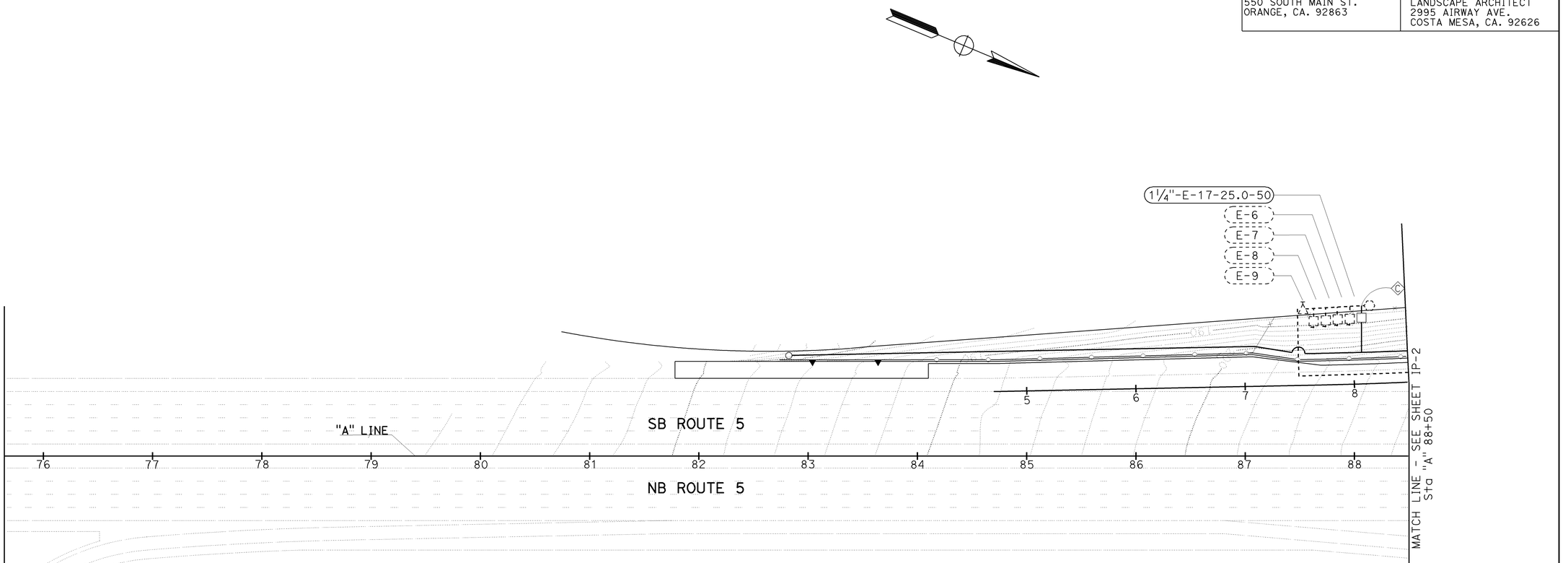

IRRIGATION PLAN

SCALE: 1"=50'

IP-1

THIS PLAN ACCURATE FOR IRRIGATION WORK ONLY

REVISED BY	
DATE REVISED	
CALCULATED-DESIGNED BY	K. QUINN
CHECKED BY	T. MANN
CONSULTANT FUNCTIONAL SUPERVISOR	LYNN CAPOUYA
STATE OF CALIFORNIA - DEPARTMENT OF TRANSPORTATION	Caltrans LANDSCAPE ARCHITECT

LAST REVISION 01-21-09
DATE PLOTTED => 30-MAR-2009
TIME PLOTTED => 09:31

BORDER LAST REVISED 3/1/2007
RELATIVE BORDER SCALE IS IN INCHES 0 50 100 150
USERNAME => trstrk
DGN FILE => c0g9401001.dgn
CU 12231
EA 0G9401

Dist	COUNTY	ROUTE	POST MILES TOTAL PROJECT	SHEET No.	TOTAL SHEETS
12	Ora	5	1.3/1.7	51	127

Lynn Capouya 01-22-09
REGISTERED LANDSCAPE ARCHITECT DATE

LICENSED LANDSCAPE ARCHITECT
LYNN CAPOUYA
Signature
No. 2314
Exp. 12/31/10
01-22-09
Date
STATE OF CALIFORNIA

3-23-09
PLANS APPROVAL DATE

THE STATE OF CALIFORNIA OR ITS OFFICERS OR AGENTS SHALL NOT BE RESPONSIBLE FOR THE ACCURACY OR COMPLETENESS OF ELECTRONIC COPIES OF THIS PLAN SHEET.

OCTA
550 SOUTH MAIN ST.
ORANGE, CA. 92863

LYNN CAPOUYA, INC.
LANDSCAPE ARCHITECT
2995 AIRWAY AVE.
COSTA MESA, CA. 92626

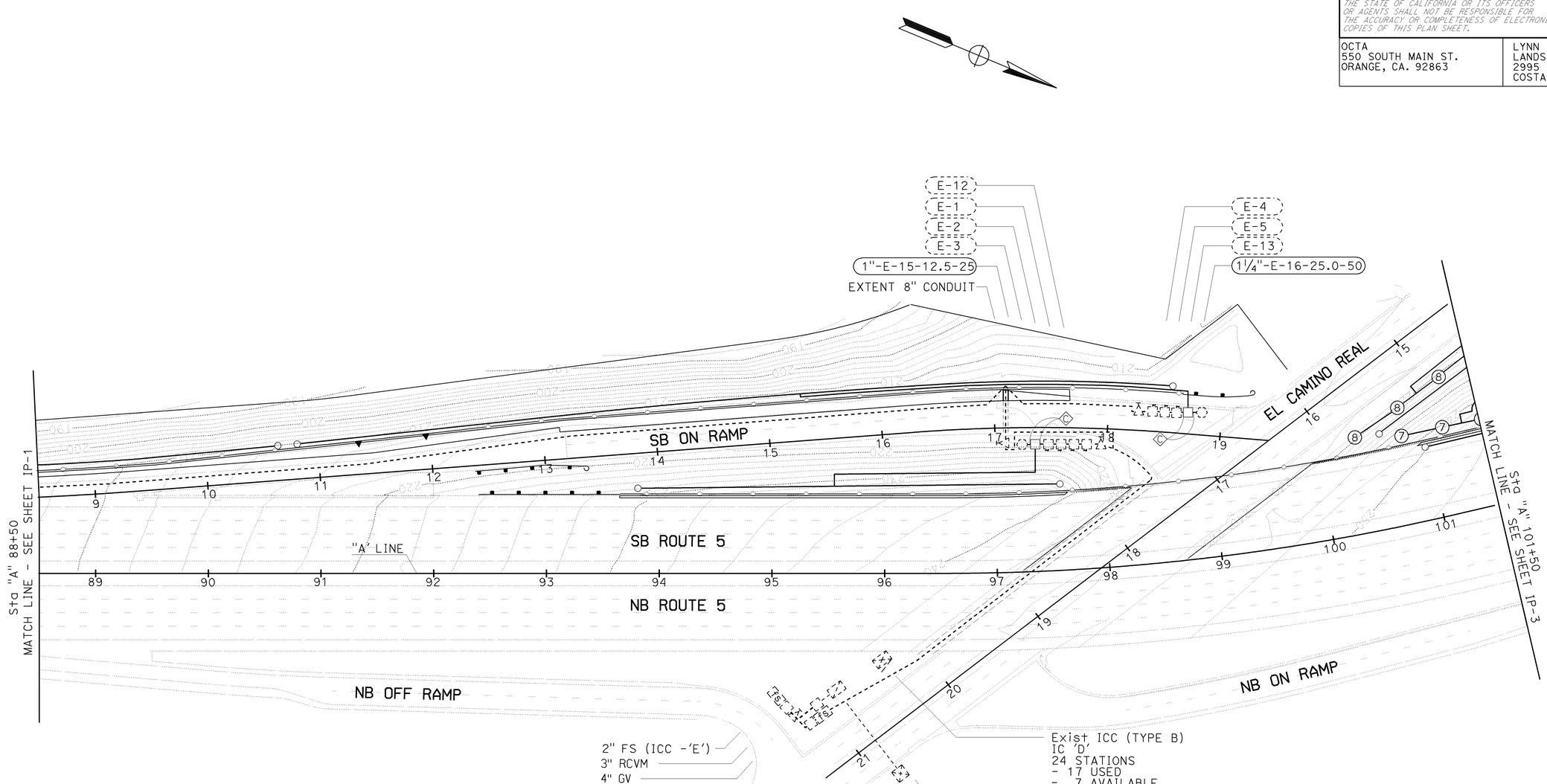

IRRIGATION PLAN

SCALE: 1"=50'

IP-2

THIS PLAN ACCURATE FOR IRRIGATION WORK ONLY

STATE OF CALIFORNIA - DEPARTMENT OF TRANSPORTATION
Caltrans LANDSCAPE ARCHITECT
CONSULTANT FUNCTIONAL SUPERVISOR: LYNN CAPOUYA
CALCULATED-DESIGNED BY: K. QUINN
CHECKED BY: T. MANN
REVISED BY
DATE REVISED

LAST REVISION DATE PLOTTED => 30-MAR-2009
01-21-09 TIME PLOTTED => 06:49

BORDER LAST REVISED 3/1/2007
RELATIVE BORDER SCALE IS IN INCHES 0 50 100 150
USERNAME => trmnguye
DGN FILE => c0g940tl002.dgn
CU 12231
EA 0G9401

Dist	COUNTY	ROUTE	POST MILES TOTAL PROJECT	SHEET No.	TOTAL SHEETS
12	Ora	5	1.3/1.7	52	127

REGISTERED LANDSCAPE ARCHITECT — 01-22-09 DATE

PLANS APPROVAL — 3-23-09 DATE

LICENSED LANDSCAPE ARCHITECT — LYNN CAPOUYA — Signature — No. 2314 — Exp. 12/31/10 — 01-22-09 Date — STATE OF CALIFORNIA

THE STATE OF CALIFORNIA OR ITS OFFICERS OR AGENTS SHALL NOT BE RESPONSIBLE FOR THE ACCURACY OR COMPLETENESS OF ELECTRONIC COPIES OF THIS PLAN SHEET.

OCTA
550 SOUTH MAIN ST.
ORANGE, CA. 92863

LYNN CAPOUYA, INC.
LANDSCAPE ARCHITECT
2995 AIRWAY AVE.
COSTA MESA, CA. 92626

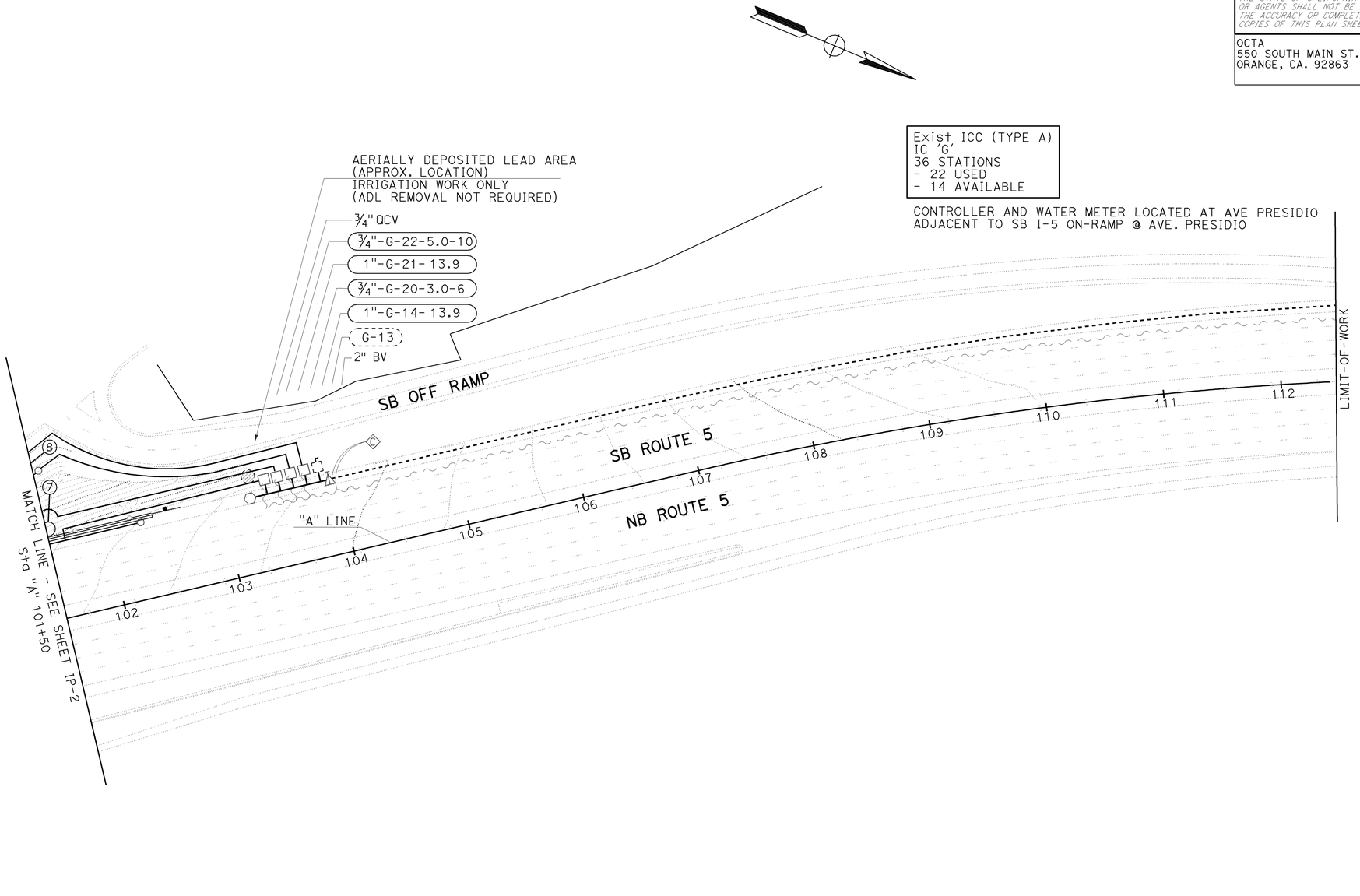

IRRIGATION PLAN

SCALE: 1"=50'

IP-3

THIS PLAN ACCURATE FOR IRRIGATION WORK ONLY

STATE OF CALIFORNIA - DEPARTMENT OF TRANSPORTATION
LANDSCAPE ARCHITECT
CONSULTANT FUNCTIONAL SUPERVISOR: LYNN CAPOUYA
CALCULATED-DESIGNED BY: K. QUINN
CHECKED BY: T. MANN
REVISED BY
DATE REVISED

BORDER LAST REVISED 3/1/2007

RELATIVE BORDER SCALE IS IN INCHES 0 50 100 150

USERNAME => trmnguye
DGN FILE => c0g940t1003.dgn

CU 12231

EA 0G9401

LAST REVISION DATE PLOTTED => 30-MAR-2009
TIME PLOTTED => 06:49
01-22-09

Dist	COUNTY	ROUTE	POST MILES TOTAL PROJECT	SHEET No.	TOTAL SHEETS
12	Ora	5	1.3/1.7	53	127

Lynn Capouya 01-22-09
REGISTERED LANDSCAPE ARCHITECT DATE

LICENSED LANDSCAPE ARCHITECT — LYNN CAPOUYA — Signature — No. 2314 — Exp. 12/31/10 — 01-22-09 Date — STATE OF CALIFORNIA

3-23-09
PLANS APPROVAL DATE

THE STATE OF CALIFORNIA OR ITS OFFICERS OR AGENTS SHALL NOT BE RESPONSIBLE FOR THE ACCURACY OR COMPLETENESS OF ELECTRONIC COPIES OF THIS PLAN SHEET.

OCTA
550 SOUTH MAIN ST.
ORANGE, CA. 92863

LYNN CAPOUYA, INC.
LANDSCAPE ARCHITECT
2995 AIRWAY AVE.
COSTA MESA, CA. 92626

NOTE:

PROPOSED CONTROL AND NEUTRAL CONDUCTORS NOT SHOWN SHALL BE INSTALLED CONNECTING NEW REMOTE CONTROL VALVES WITH EXISTING IRRIGATION CONTROLLER.

SPRINKLER SCHEDULE (CALTRANS PORTION ONLY)

SYMBOL	TYPE	DESCRIPTION	SPRAY PATTERN	OPERATING PRESSURE (PSI)	PRESSURE COMPENSATING ②	PLUS / MINUS 5% ② DISCHARGE: GALLONS PER SECOND (GPS)	GALLONS PER MINUTE (GPM)	GALLONS PER HOUR (GPH)	RADIUS (IN FEET)(FT.)	WIDTH x LENGTH (IN INCHES) (IN)	MATERIAL	NOZZLE SIZE IN INCHES (IN)	INLET CONNECTION (NPT) (DN IN INCHES) (IN)	POSITIVE-LOCKING ADJ ARC STOP	BACKSPLASH PREVENTER	DIFFUSER PIN	DISTANCE CONTROL FLAP	ADJ DISCHARGE	RISER: TYPE	RISER: MATERIAL: PLASTIC	RISER: MATERIAL: GALVANIZED	RISER: SIZE (IPS) (IN INCHES)(IN)	RISER: HEIGHT (IN INCHES)(IN)	SWING JOINT (TYPE) ⑤	RISER SUPPORT	SPRINKLER PROTECTOR (TYPE)	REMARKS
⑦	A-7	GEAR DRIVEN	P	60.0	X	-	3.48	-	44.5-49.5	-	PL	-	3/4"	-	-	-	-	X	IV	X	-	3/4"	12	I	-	-	
⑧	A-8	GEAR DRIVEN POP-UP	P	60.0	X	-	3.48	-	44.5-49.5	-	PL	-	3/4"	-	-	-	-	X	IV	-	-	3/4"	-	I	-	-	4" POP-UP ⑦
○	C-2	FLOOD BUBBLER		30.0	X	-	0.5	-	-	-	PL	-	1/2"	-	-	-	-	-	V	X	-	1/2"	12	-	-	-	⑦

X IN BOX DENOTES REQUIREMENT

APPLICABLE WHEN CIRCLED BELOW:

1 - See Special Provisions.
② - If a pressure compensating device is specified, the discharge and radii shown reflect its use.
3 - Arc Stop shall be fitted with a nut and bolt.
4 - Vinyl-coated cast iron housing.
⑤ - Swing Joints required adjacent to shoulders, curbs, sidewalks, and dikes.
6 - Unless otherwise shown on plans.
⑦ - Lowest head check valve.

ABBREVIATIONS

F	full circle	Ft	feet/foot
P	part circle	GPM	gallons per minute
F/P	full/part circle	GPH	gallons per hour
Q	quarter circle	Adj	adjustable
T	third circle	PL	plastic
H	half circle	B/B	brass/bronze
TT	two third circle	B/PL	brass/plastic
TQ	three quarter circle	B/B/PL	brass/bronze/plastic
CST	center strip	NPT	national pipe thread
SST	side strip	IPS	iron pipe size
EST	end strip	PSI	pounds per square inch

THRUST BLOCK

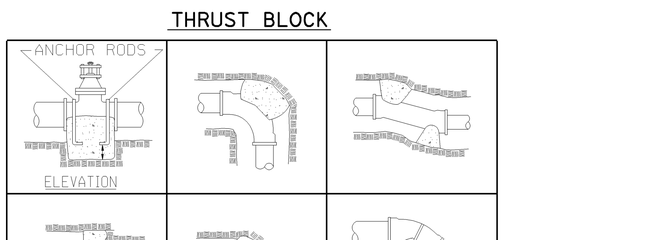

EXTEND IRRIGATION CROSSOVERS

LINE	STATION	Exist Cond SIZE (IN)	Exist Cond TYPE	SIDE Rt	SIDE Lt	EXTEND Cond LENGTH(ft) SIZE 8"	CB	OL	(N) WATER LINE CROSSOVER SIZE(in)	(N) SPRINKLER CONTROL CROSSOVER SIZE(in)
SB ON-RAMP	17+10	8	CSP		X	10'		X	3"	2"
					TOTAL	10'				

(N) - NOT A SEPARATE PAY ITEM, FOR INFORMATION ONLY
X - DENOTES REQUIREMENT
DN - DIAMETER NOMINAL
CB - COUPLING BAND
OL - OVERLAP

VALVE CODE

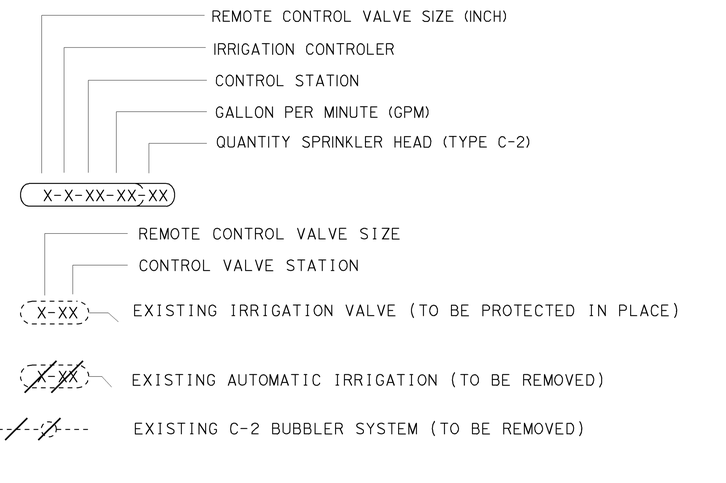

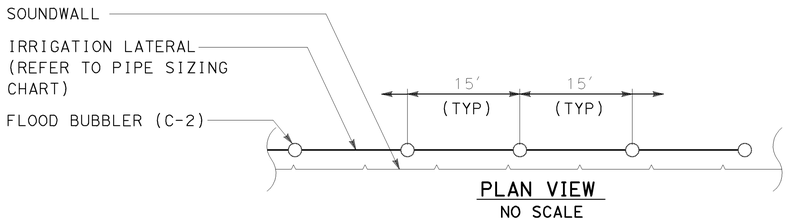

PLAN VIEW
NO SCALE

FLOOD BUBBLER

LATERAL LINE (PR200) PIPE SIZING CHART

SYM	C-2 SPRINKLER SIZE 3/4"	I"	I-1/4"
○	0-8 GPM 0-16 HEAD	8-16 GPM 17-32 HEADS	16-25 GPM 33-50 HEADS

SYM	A-7, A-8 SPRINKLER SIZE 3/4"	I"	I-1/4"	I-1/2"	2"
⑦ ⑧	0-8 GPM 1-2 HEAD	8-16 GPM 3-4 HEADS	16-25 GPM 5-6 HEADS	25-35 GPM 7-10 HEADS	35-55 GPM 11-15 HEADS

LANDSCAPE DETAILS

SCALE: 1"=50'

LD-1

REVISED BY | DATE REVISED
K. QUINN | T. MANN
CALCULATED-DESIGNED BY | CHECKED BY
LYNN CAPOUYA
CONSULTANT FUNCTIONAL SUPERVISOR
STATE OF CALIFORNIA - DEPARTMENT OF TRANSPORTATION
Caltrans LANDSCAPE ARCHITECT

LAST REVISION DATE PLOTTED => 30-MAR-2009
01-22-09 TIME PLOTTED => 06:49

Dist	COUNTY	ROUTE	POST MILES TOTAL PROJECT	SHEET No.	TOTAL SHEETS
12	Ora	5	1.3/1.7	54	127

REGISTERED CIVIL ENGINEER — DATE: 01-22-09

JOSEPH W. SAWTELLE No. C 60110 Exp. 6/30/10 CIVIL — REGISTERED PROFESSIONAL ENGINEER — STATE OF CALIFORNIA

3-23-09
PLANS APPROVAL DATE

THE STATE OF CALIFORNIA OR ITS OFFICERS OR AGENTS SHALL NOT BE RESPONSIBLE FOR THE ACCURACY OR COMPLETENESS OF SCANNED COPIES OF THIS PLAN SHEET.

ORANGE COUNTY
TRANSPORTATION AUTHORITY
550 SOUTH MAIN STREET
ORANGE, CA 92863

RMC, INC.
6 HUTTON CENTRE DRIVE
SUITE 1250
SANTA ANA, CA 92707

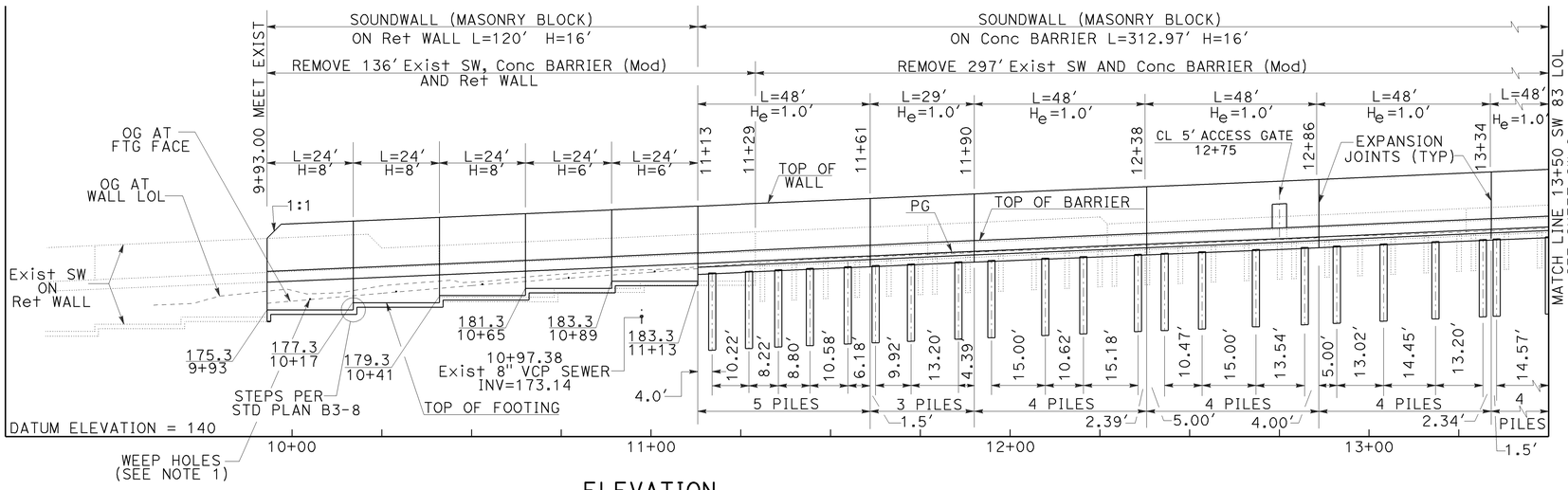

ELEVATION

1"=20' HORIZ. 1"=20' VERT.

BENCHMARK:

ORANGE COUNTY 3B-113-05
DESCRIBED BY OCS 2005 - FOUND 3¾" OCS ALUMINUM BENCHMARK DISK STAMPED "3B-113-05" SET IN THE TOP SOUTHWESTERLY CORNER OF A 6.4 FT. BY 9.5 FT. CONCRETE CATCH BASIN. MONUMENT IS LOCATED IN THE SOUTHEASTERLY CORNER OF THE INTERSECTION OF AVENIDA DEL PRESIDENTE AND AVENIDA MENDOCINO, 36 FT. EASTERLY OF THE CENTERLINE OF DEL PRESIDENTE, AND 63 FT. SOUTHERLY OF THE CENTERLINE OF MENDOCINO. MONUMENT IS SET LEVEL WITH THE SIDEWALK 180.998 FEET, 1995 ADJUSTMENT (2005 YEAR LEVELED)

NOTES:

1. CONSTRUCT 4" WEEP HOLES WITH 1 CUBIC FOOT PERVIOUS BACKFILL MATERIAL AT 24 FOOT CENTER TO CENTER PER STD PLAN B0-3

2. 5' ACCESS GATES SHALL BE INSTALLED PER STANDARD PLAN B15-12, B15-13 AND B15-14

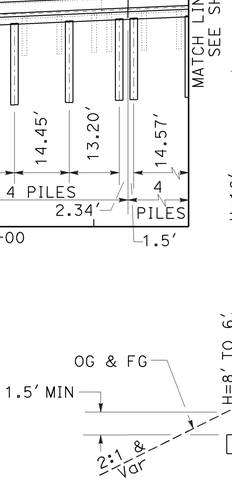

WALL TYPICAL SECTION

NO SCALE
Sta 9+93 TO Sta 11+13

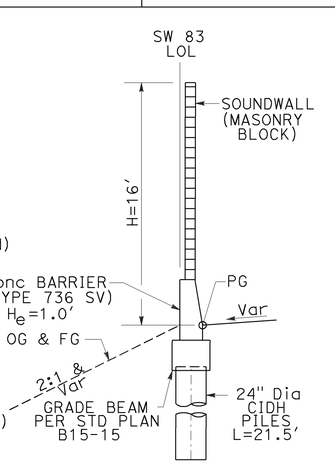

WALL TYPICAL SECTION

NO SCALE
Sta 11+13 TO Sta 13+50

SOUNDWALL ON RETAINING WALL ELAVATIONS

WALL LOL Sta	TOP OF WALL	TOP OF BARRIER	TOP OF FTG	PG
9+93	199.03	186.03	175.3	183.03
10+17	200.06	187.06	175.3/177.3	184.06
10+41	201.09	188.09	177.3/179.3	185.09
10+65	202.12	189.12	179.3/181.3	186.12
10+89	203.15	190.15	181.3/183.3	187.15
11+13	204.20	191.20	183.3	188.20

SOUNDWALL ON BARRIER ELEVATIONS

WALL LOL Sta	TOP OF WALL	TOP OF BARRIER	PG
11+13	204.20	191.20	188.20
11+25	204.74	191.74	188.74
11+50	205.84	192.84	189.84
11+61	206.32	193.32	190.32
11+75	206.93	193.93	190.93
11+90	207.58	194.58	191.58
12+00	208.01	195.01	192.01
12+25	209.07	196.07	193.07
12+38	209.60	196.60	193.60
12+50	210.09	197.09	194.09
12+75	211.12	198.12	195.12
12+86	211.61	198.61	195.61
13+00	212.23	199.23	196.23
13+25	213.33	200.33	197.33
13+34	213.72	200.72	197.72
13+50	214.42	201.42	198.42

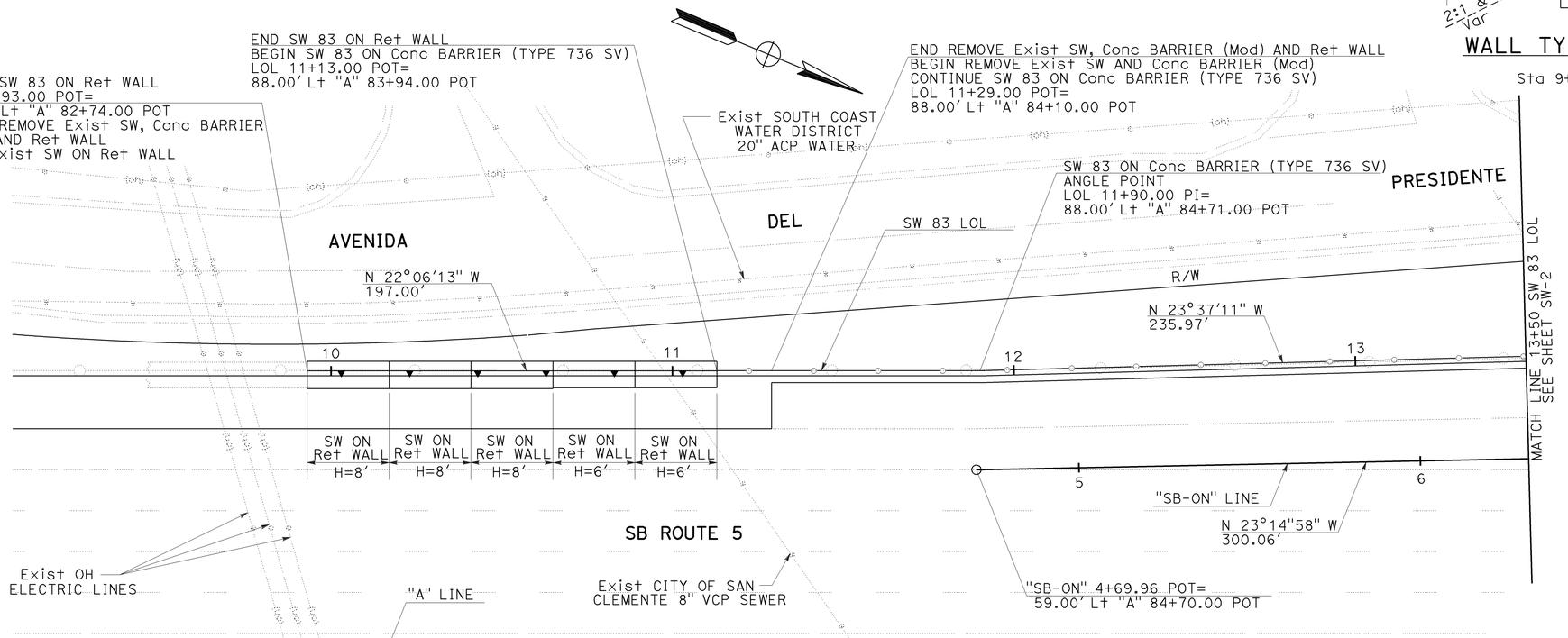

PLAN

1"=20'

THIS PLAN ACCURATE FOR SOUNDWALL AND RETAINING WALL WORK ONLY.

SOUNDWALL PLAN

SOUNDWALL No.83
SCALE AS SHOWN

SW-1

CALCULATED-DESIGNED BY	CHECKED BY	REVISED BY	DATE REVISED
C. SOSA	J. SAWTELLE		

CONSULTANT FUNCTIONAL SUPERVISOR: JAMAL SALMAN

STATE OF CALIFORNIA - DEPARTMENT OF TRANSPORTATION — DESIGN F

Caltrans

LAST REVISION DATE PLOTTED => 30-MAR-2009
TIME PLOTTED => 06:58
01-20-09

BORDER LAST REVISED 4/11/2008

RELATIVE BORDER SCALE IS IN INCHES 0 1 2 3

USERNAME => trstrk
DGN FILE => c0g940ra001.dgn

CU 12231

EA 0G9401

Dist	COUNTY	ROUTE	POST MILES TOTAL PROJECT	SHEET No.	TOTAL SHEETS
12	Ora	5	1.3/1.7	55	127

REGISTERED CIVIL ENGINEER — 01-22-09 DATE

3-23-09
PLANS APPROVAL DATE

REGISTERED PROFESSIONAL ENGINEER — JOSEPH W. SAWTELLE — No. C 60110 — Exp. 6/30/10 — CIVIL — STATE OF CALIFORNIA

THE STATE OF CALIFORNIA OR ITS OFFICERS OR AGENTS SHALL NOT BE RESPONSIBLE FOR THE ACCURACY OR COMPLETENESS OF SCANNED COPIES OF THIS PLAN SHEET.

ORANGE COUNTY TRANSPORTATION AUTHORITY
550 SOUTH MAIN STREET
ORANGE, CA 92863

RMC, INC.
6 HUTTON CENTRE DRIVE
SUITE 1250
SANTA ANA, CA 92707

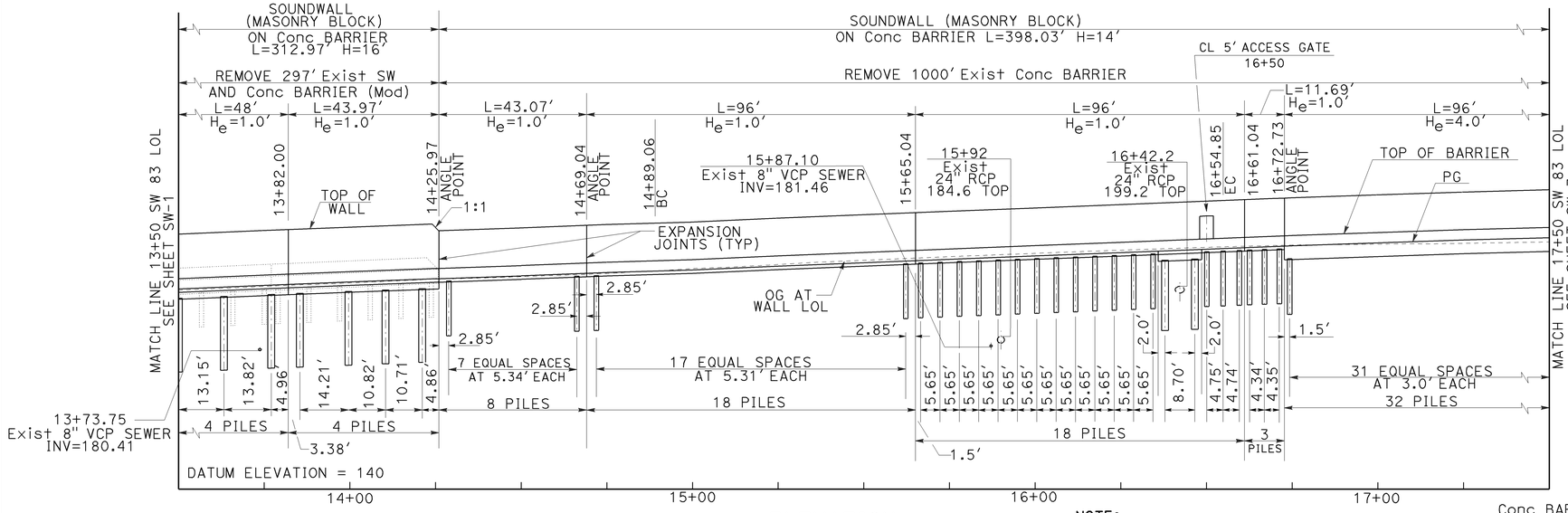

ELEVATION
1"=20' HORIZ. 1"=20' VERT.

NOTE:
5' ACCESS GATES SHALL BE INSTALLED PER STANDARD PLAN B15-12, B15-13 AND B15-14

CURVE DATA

No.	R	Δ	T	L
(3)	3000.00'	3°11'29"	83.57'	167.10'
(7)	2976.50'	3°11'29"	82.92'	165.79'

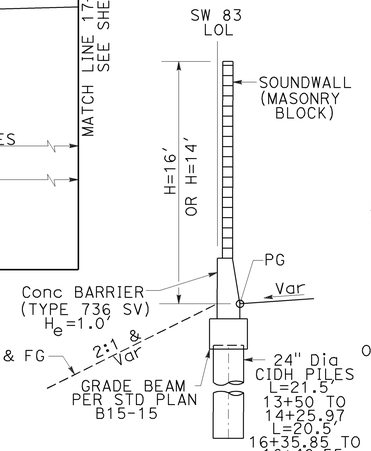

WALL TYPICAL SECTION
NO SCALE
Sta 13+50 TO Sta 14+25.97
Sta 16+35.85 TO Sta 16+48.55

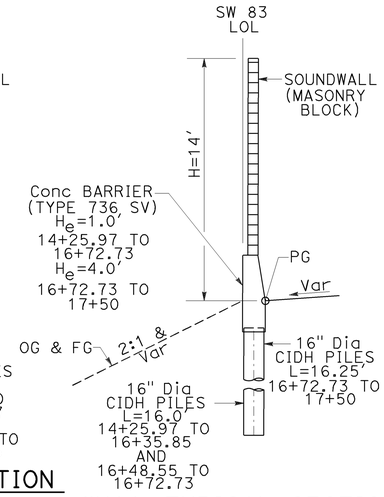

WALL TYPICAL SECTION
NO SCALE
Sta 13+50 TO Sta 14+25.97
Sta 16+48.55 TO Sta 17+50

SW 83 ON Conc BARRIER (TYPE 736 SV)
ANGLE POINT
LOL 14+69.04 PI=
23.50' Lt "SB-ON" 7+50.00 POT

SW 83 ON Conc BARRIER (TYPE 736 SV)
ANGLE POINT
LOL 14+25.97 PI=
94.24' Lt "A" 87+06.88 POT
END REMOVE Exist SW AND
Conc BARRIER (Mod)
BEGIN REMOVE Exist Conc BARRIER

SW 83 ON Conc BARRIER (TYPE 736 SV)
ANGLE POINT
LOL 16+72.73 PI=
23.50' Lt "SB-ON" 9+55.00 POT

SW 83 ON Conc BARRIER (TYPE 736 SV)
LOL 16+54.85 EC=
23.50' Lt "SB-ON" 9+37.12 EC

SW 83 ON Conc BARRIER (TYPE 736 SV)
LOL 14+89.06 BC=
23.50 Lt "SB-ON" 7+70.02 BC

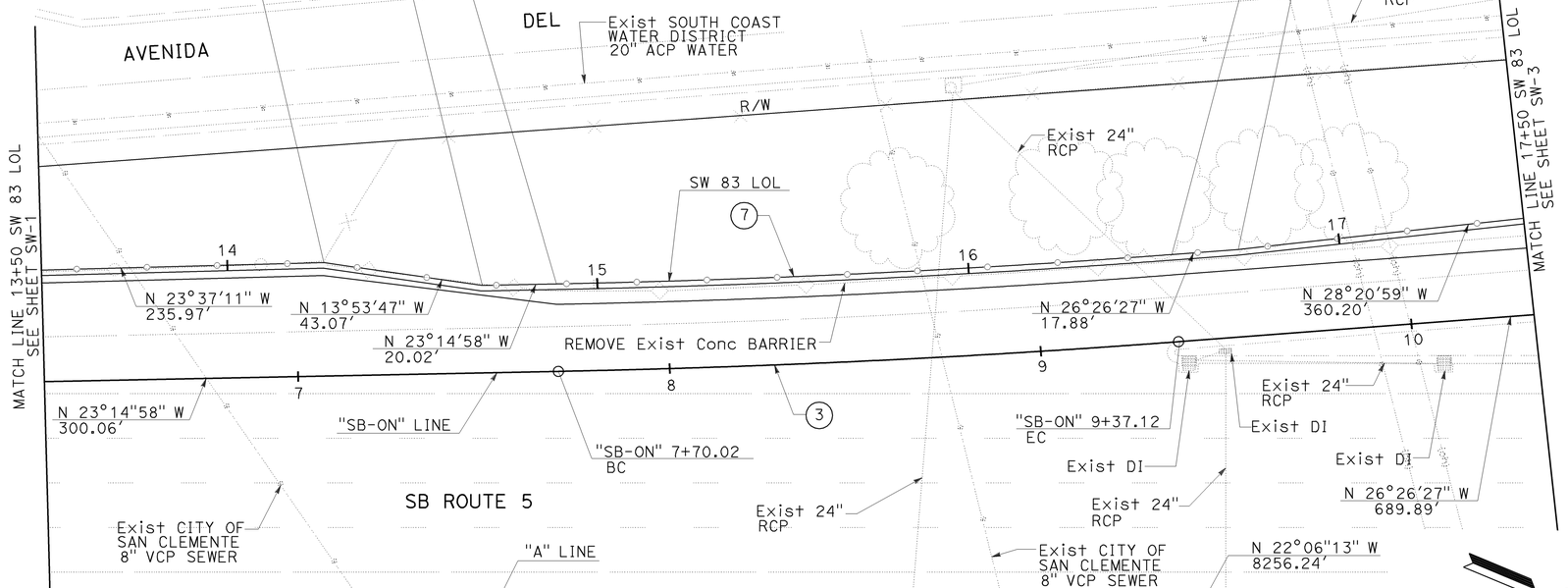

PLAN
1"=20'

THIS PLAN ACCURATE FOR SOUNDWALL AND RETAINING WALL WORK ONLY.

SOUNDWALL ON BARRIER ELEVATIONS

WALL LOL Sta	TOP OF WALL	TOP OF BARRIER	PG
13+50	214.42	201.42	198.42
13+75	215.48	202.48	199.48
13+82	215.75	202.75	199.75
14+00	216.45	203.45	200.45
14+25	N/A	204.39	201.39
14+25.97	215.42	204.42	201.42
14+50	216.24	205.24	202.24
14+69.04	216.98	205.98	202.98
14+75	217.21	206.21	203.21
15+00	217.94	206.94	203.94
15+25	219.06	208.06	205.06
15+50	220.07	209.07	206.07
15+65.04	220.67	209.67	206.67
15+75	221.07	210.07	207.07
16+00	222.04	211.04	208.04
16+25	223.03	212.03	209.03
16+50	224.03	213.03	210.03
16+61.04	224.46	213.46	210.46
16+72.73	224.92	213.92	210.92
16+75	225.01	214.01	211.01
17+00	225.88	214.88	211.88
17+25	226.70	215.70	212.70
17+50	227.38	216.38	213.38

SOUNDWALL PLAN
SOUNDWALL No.83
SCALE AS SHOWN

SW-2

REVISED BY | DATE REVISED
C. SOSA | J. SAWTELLE
CALCULATED-DESIGNED BY | CHECKED BY
CONSULTANT FUNCTIONAL SUPERVISOR: JAMAL SALMAN
STATE OF CALIFORNIA - DEPARTMENT OF TRANSPORTATION — DESIGN F
Caltrans

LAST REVISION DATE PLOTTED => 30-MAR-2009
TIME PLOTTED => 06:58
01-20-09

BORDER LAST REVISED 4/11/2008 | RELATIVE BORDER SCALE IS IN INCHES 0 1 2 3 | USERNAME => trstrk | DGN FILE => c0g940ra002.dgn | CU 12231 | EA 0G9401

Dist	COUNTY	ROUTE	POST MILES TOTAL PROJECT	SHEET No.	TOTAL SHEETS
12	Ora	5	1.3/1.7	56	127

REGISTERED CIVIL ENGINEER — 01-22-09 DATE

JOSEPH W. SAWTELLE No. C 60110 Exp. 6/30/10 CIVIL — REGISTERED PROFESSIONAL ENGINEER — STATE OF CALIFORNIA

3-23-09
PLANS APPROVAL DATE

THE STATE OF CALIFORNIA OR ITS OFFICERS OR AGENTS SHALL NOT BE RESPONSIBLE FOR THE ACCURACY OR COMPLETENESS OF SCANNED COPIES OF THIS PLAN SHEET.

ORANGE COUNTY TRANSPORTATION AUTHORITY
550 SOUTH MAIN STREET
ORANGE, CA 92863

RMC, INC.
6 HUTTON CENTRE DRIVE
SUITE 1250
SANTA ANA, CA 92707

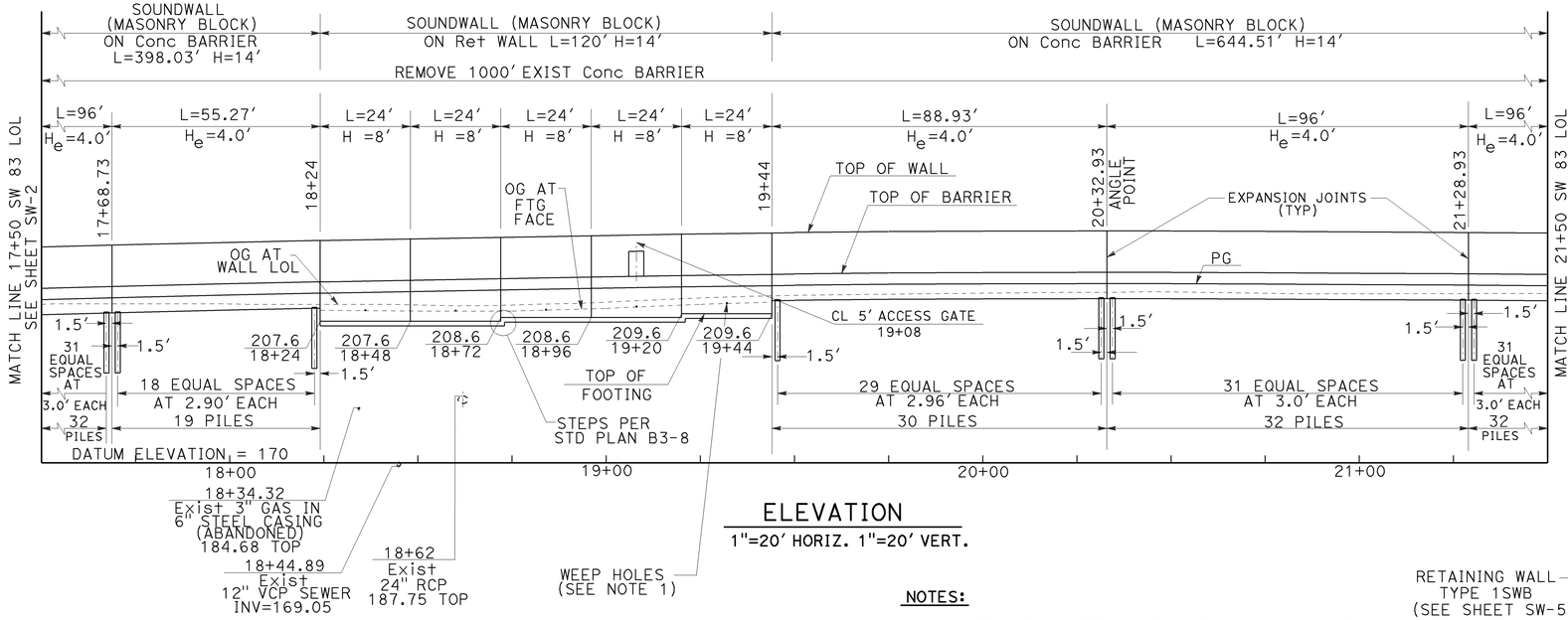

ELEVATION
1"=20' HORIZ. 1"=20' VERT.

NOTES:

1. CONSTRUCT 4" WEEP HOLES WITH 1 CUBIC FOOT PERVIOUS BACKFILL MATERIAL AT 24' CENTER TO CENTER PER STD PLAN B0-3
2. 5' ACCESS GATES SHALL BE INSTALLED PER STANDARD PLAN B15-12, B15-13 AND B15-14

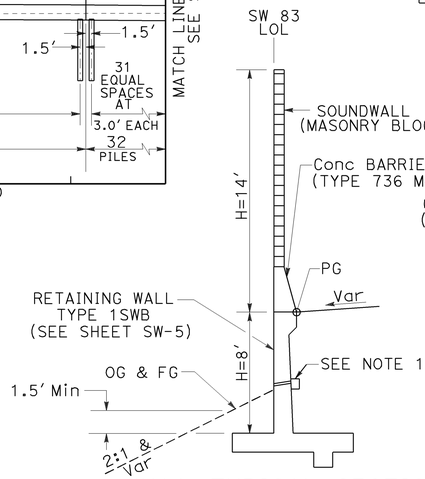

WALL TYPICAL SECTION
NO SCALE
Sta 18+24 TO Sta 19+94

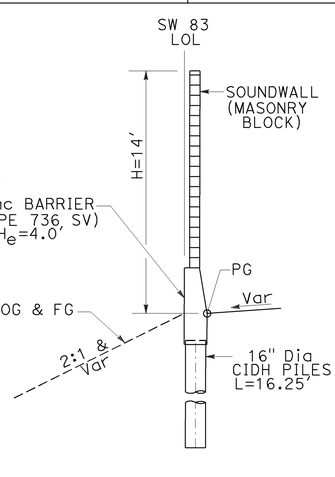

WALL TYPICAL SECTION
NO SCALE
Sta 17+50 TO Sta 18+24
Sta 19+94 TO Sta 21+50

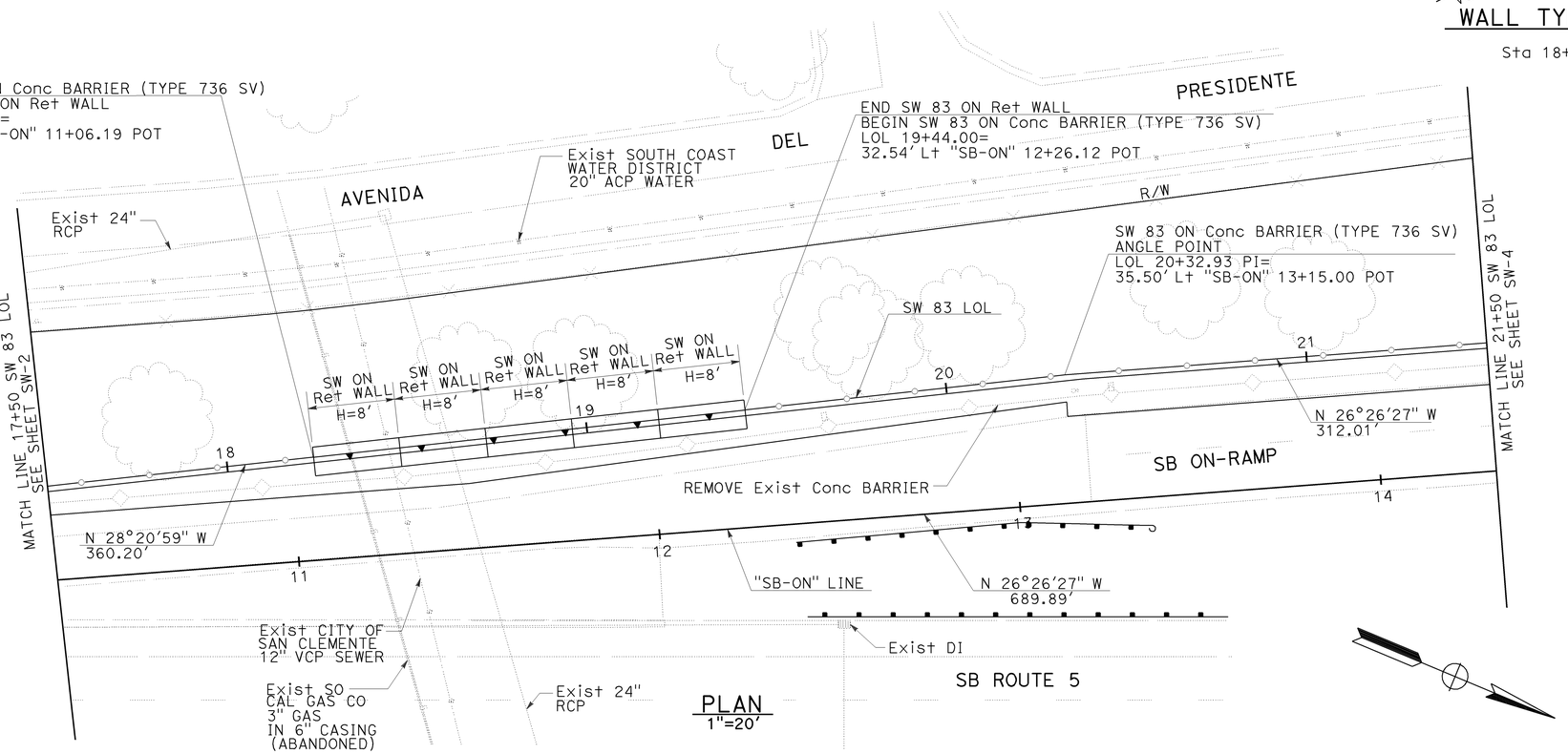

PLAN
1"=20'

SOUNDWALL ON RETAINING WALL ELAVATIONS

WALL LOL Sta	TOP OF WALL	TOP OF BARRIER	TOP OF FTG	PG
18+24	229.10	218.10	207.6	215.10
18+48	229.53	218.53	207.6	215.53
18+72	229.96	218.96	207.6/208.6	215.96
18+96	230.40	219.40	208.6	216.40
19+20	230.81	219.81	208.6/209.6	216.81
19+44	231.13	220.13	209.6	217.13

SOUNDWALL ON BARRIER ELEVATIONS

WALL LOL Sta	TOP OF WALL	TOP OF BARRIER	PG
17+50	227.38	216.38	213.38
17+68.73	227.87	216.87	213.87
17+75	228.03	217.03	214.03
18+00	228.60	217.60	214.60
18+24	229.10	218.10	215.10
19+44	231.13	220.13	217.13
19+50	231.22	220.22	217.22
20+00	231.56	220.56	217.56
20+25	231.64	220.64	217.64
20+32.93	231.63	220.63	217.63
20+50	231.61	220.61	217.61
20+75	231.52	220.52	217.52
21+00	231.39	220.39	217.39
21+25	231.25	220.25	217.25
21+28.93	231.22	220.22	217.22
21+50	231.09	220.09	217.09

THIS PLAN ACCURATE FOR SOUNDWALL AND RETAINING WALL WORK ONLY.

SOUNDWALL PLAN
SOUNDWALL No.83
SCALE AS SHOWN

SW-3

REVISED BY | DATE REVISED
C. SOSA | J. SAWTELLE
CALCULATED-DESIGNED BY | CHECKED BY
JAMAL SALMAN — CONSULTANT FUNCTIONAL SUPERVISOR
STATE OF CALIFORNIA - DEPARTMENT OF TRANSPORTATION — DESIGN F — Caltrans

LAST REVISION | DATE PLOTTED => 30-MAR-2009
01-20-09 | TIME PLOTTED => 06:59

BORDER LAST REVISED 4/11/2008 | RELATIVE BORDER SCALE IS IN INCHES 0 1 2 3 | USERNAME => trstrk | DGN FILE => c0g940ra003.dgn | CU 12231 | EA 0G9401

Dist	COUNTY	ROUTE	POST MILES TOTAL PROJECT	SHEET No.	TOTAL SHEETS
12	Ora	5	1.3/1.7	57	127

Joseph W. Sawtelle 01-22-09
REGISTERED CIVIL ENGINEER DATE

3-23-09
PLANS APPROVAL DATE

JOSEPH W. SAWTELLE No. C 60110 Exp 6/30/10 CIVIL — REGISTERED PROFESSIONAL ENGINEER — STATE OF CALIFORNIA

THE STATE OF CALIFORNIA OR ITS OFFICERS OR AGENTS SHALL NOT BE RESPONSIBLE FOR THE ACCURACY OR COMPLETENESS OF SCANNED COPIES OF THIS PLAN SHEET.

ORANGE COUNTY
TRANSPORTATION AUTHORITY
550 SOUTH MAIN STREET
ORANGE, CA 92863

RMC, INC.
6 HUTTON CENTRE DRIVE
SUITE 1250
SANTA ANA, CA 92707

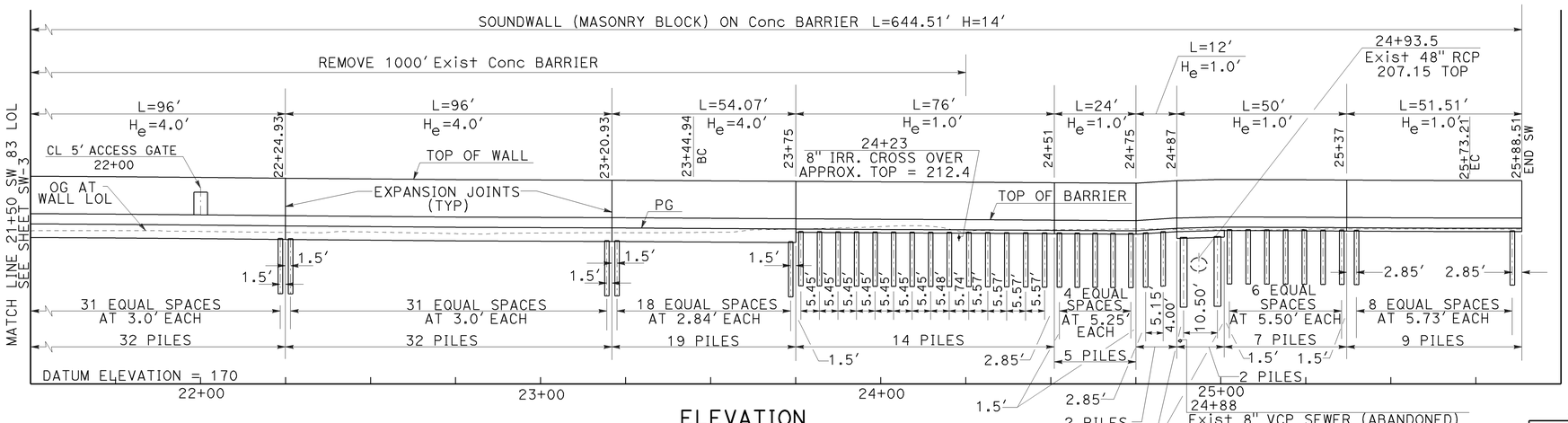

ELEVATION

1"=20' HORIZ. 1"=20' VERT.

NOTES:

5' ACCESS GATES SHALL BE INSTALLED PER STANDARD PLAN B15-12, B15-13 AND B15-14

CURVE DATA

No.	R	Δ	T	L
(4)	1500.00'	9°00'00"	118.05'	235.62'
(8)	1535.50'	8°31'03"	114.34'	228.27'

WALL TYPICAL SECTION

NO SCALE
Sta 24+50 TO Sta 24+87
Sta 25+01 TO Sta 25+88.51

WALL TYPICAL SECTION

NO SCALE
Sta 24+87 TO Sta 25+01

SOUNDWALL ON BARRIER ELEVATIONS

WALL LOL Sta	TOP OF WALL	TOP OF BARRIER	PG
21+50	231.09	220.09	217.09
21+75	230.92	219.92	216.92
22+00	230.71	219.71	216.71
22+24.93	230.49	219.49	216.49
22+25	230.49	219.49	216.49
22+50	230.29	219.29	216.29
22+75	230.10	219.10	216.10
23+00	229.96	218.96	215.96
23+20.93	229.87	218.87	215.87
23+25	229.86	218.86	215.86
23+50	229.72	218.72	215.72
23+75	229.57	218.57	215.57
24+00	229.44	218.44	215.44
24+25	229.32	218.32	215.32
24+50	229.18	218.18	215.18
24+51	229.17	218.17	215.17
24+75	229.04	218.04	215.04
24+87	229.80	218.80	215.80
25+00	230.14	219.14	216.14
25+25	230.03	219.03	216.03
25+37	229.95	218.95	215.95
25+50	229.87	218.87	215.87
25+75	229.79	218.79	215.79
25+88.51	229.78	218.78	215.78

PLAN

1"=20'

SOUNDWALL PLAN

SOUNDWALL No. 83
SCALE AS SHOWN

SW-4

THIS PLAN ACCURATE FOR SOUNDWALL AND RETAINING WALL WORK ONLY.

REVISED BY	DATE REVISED

CALCULATED-DESIGNED BY: C. SOSA
CHECKED BY: J. SAWTELLE
CONSULTANT FUNCTIONAL SUPERVISOR: JAMAL SALMAN
STATE OF CALIFORNIA - DEPARTMENT OF TRANSPORTATION
DESIGN F
Caltrans

LAST REVISION: DATE PLOTTED => 30-MAR-2009 TIME PLOTTED => 06:59 01-20-09

BORDER LAST REVISED 4/11/2008
RELATIVE BORDER SCALE IS IN INCHES 0 1 2 3
USERNAME => trstrk
DGN FILE => c0g940ra004.dgn
CU 12231
EA 0G9401

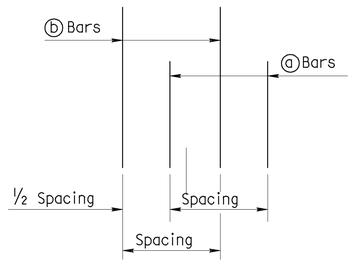

DETAIL B

No Scale

GENERAL NOTES

1. For soundwall and retaining wall architectural finish or texture, see details elsewhere in project plans.
2. For details not shown and drainage notes, see B3-8
3. Footing cover, 1′-6" minimum.
4. Limit of no splicing rebars = 3 times the bottom thickness of the stem.
5. Placement of reinforcements :
   - ⓑ & ⓒ bars are spliced together.
   - * ⓐ & ⓑ bars are bundled together.
   - ** Alternate ⓐ & ⓑ bars are shown in "Detail B".
   - Cont = Continuous.
6. For Soundwall & Barrier reinforcement, see "Soundwall Masonry Block on Barriers" sheets in Standard Plans.

TABLE 1: TABLE OF REINFORCING STEEL DIMENSIONS AND DATA

	Stem With Haunch													
Design H	6′	8′	10′	12′	14′	16′	18′	20′	22′	24′	26′	28′	30′	32′
W	7′-9"	8′-0"	8′-9"	9′-9"	10′-9"	12′-0"	13′-0"	14′-3"	15′-3"	16′-6"	18′-6"	19′-9"	21′-3"	22′-6"
C	2′-9"	2′-9"	3′-0"	3′-3"	3′-6"	4′-0"	4′-3"	4′-9"	5′-0"	5′-6"	6′-3"	6′-9"	7′-3"	7′-9"
B	5′-0"	5′-3"	5′-9"	6′-6"	7′-3"	8′-0"	8′-9"	9′-6"	10′-3"	11′-0"	12′-3"	13′-0"	14′-0"	14′-9"
F Spread footing	1′-3"	1′-3"	1′-3"	1′-3"	1′-3"	1′-6"	1′-6"	1′-9"	2′-0"	2′-3"	2′-9"	3′-0"	3′-3"	3′-9"
Batter	0	½ :12	½ :12	½ :12	½ :12	½ :12	½ :12	½ :12	½ :12	⅝ :12	¾ :12	⅞ :12	1 :12	1 :12
Stem thickn. @ Haunch	1′-0"	1′-0"	1′-0"	1′-0"	1′-0"	1′-0"	1′-0"	1′-0"	1′-0"	1′-0"	1′-0"	1′-0"	1′-0"	1′-0"
ⓐ Bars				#6@18**	#7@18**	#8@18**	#9@18**	#10@18**	#8@9*	#8@9*	#7@6*	#10@12**	#9@9*	#11@12**
X				Cont	Cont	Cont	Cont	Cont	Cont	Cont	Cont	Cont	Cont	Cont
Y				8′-0"	6′-6"	7′-6"	8′-6"	9′-6"	9′-6"	11′-0"	11′-6"	13′-0"	14′-0"	15′-6"
ⓑ Bars	#5@12	#5@12	#5@9	#6@18**	#7@18**	#8@18**	#9@18**	#10@18**	#8@9*	#8@9*	#7@6*	#10@12**	#9@9*	#11@12**
X	Cont	Cont	Cont	Cont	Cont	Cont	Cont	Cont	Cont	5′-6"	6′-6"	7′-0"	8′-0"	8′-6"
Y	Cont	Cont	Cont	Cont	10′-6"	13′-0"	15′-0"	17′-6"	19′-6"	21′-0"	18′-6"	19′-0"	25′-6"	23′-6"
ⓒ Bars					#6@18	#6@18	#6@18	#6@18	#6@18	#6@18	#6@12	#7@12	#7@18	#7@12
ⓓ Bars	#5@12	#5@12	#5@12	#5@9	#6@9	#6@9	#6@6	#8@9	#8@9	#8@9	#7@6	#7@6	#9@9	#9@9
Ultimate Bearing Capacity Req'd k/sf	4.6	5.5	6.1	6.6	7.3	8.1	9.0	9.9	11.3	12.2	12.5	13.4	14.1	15.4

TABLE 2: TABLE OF REINFORCING STEEL DIMENSIONS AND DATA

	Stem With Haunch						Stem Without Haunch						
Design H	8′	10′	12′	14′	16′	18′	20′	22′	24′	26′	28′	30′	32′
W	8′-0"	8′-6"	9′-3"	10′-3"	11′-3"	13′-0"	13′-9"	16′-0"	16′-6"	18′-6"	20′-0"	20′-6"	21′-9"
C	2′-9"	2′-9"	3′-0"	3′-6"	3′-9"	4′-3"	4′-6"	5′-3"	5′-6"	6′-3"	6′-9"	6′-9"	7′-6"
B	5′-3"	5′-9"	6′-3"	6′-9"	7′-6"	8′-9"	9′-3"	10′-9"	11′-0"	12′-3"	13′-3"	13′-9"	14′-3"
F Spread footing	1′-3"	1′-3"	1′-3"	1′-3"	1′-6"	1′-6"	1′-9"	2′-0"	2′-3"	2′-9"	3′-0"	3′-3"	3′-6"
Batter	0	0	0	0	0	0	0	0	0	¼ :12	½ :12	½ :12	½ :12
Stem thickn. @ Haunch	1′-0"	1′-0"	1′-0"	1′-0"	1′-3"	1′-3"							
Stem thickn. @ top							1′-6"	2′-0"	2′-0"	2′-0"	2′-0"	2′-0"	2′-0"
ⓐ Bars			#6@12**	#5@6*	#9@18**	#9@12**	#9@12**	#9@12**	#7@6*	#7@6*	#7@6*	#9@9*	#11@12**
X			Cont	Cont	Cont	Cont	Cont	Cont	Cont	Cont	Cont	Cont	Cont
Y			5′-6"	5′-6"	8′-6"	8′-6"	8′-6"	8′-6"	9′-6"	11′-0"	12′-6"	13′-6"	14′-6"
ⓑ Bars	#5@9	#6@9	#6@12**	#5@6*	#9@18**	#9@12**	#9@12**	#9@12**	#7@6*	#7@6*	#7@6*	#9@9*	#11@12**
X	Cont	Cont	Cont	Cont	Cont	Cont	Cont	Cont	5′-6"	6′-0"	7′-6"	7′-6"	8′-0"
Y	Cont	Cont	Cont	Cont	11′-6"	11′-6"	12′-0"	12′-0"	17′-6"	20′-0"	21′-6"	24′-0"	24′-0"
ⓒ Bars					#7@18	#7@12	#7@12	#7@12	#6@12	#6@12	#6@12	#7@18	#7@12
ⓓ Bars	#5@12	#5@9	#5@9	#6@9	#6@9	#9@12	#9@12	#7@7	#6@6	#7@6	#7@6	#9@9	#9@9
Ultimate Bearing Capacity Req'd k/sf	5.5	6.5	7.3	7.6	9.0	9.0	10.6	10.5	12.2	12.6	13.3	15.4	16.0

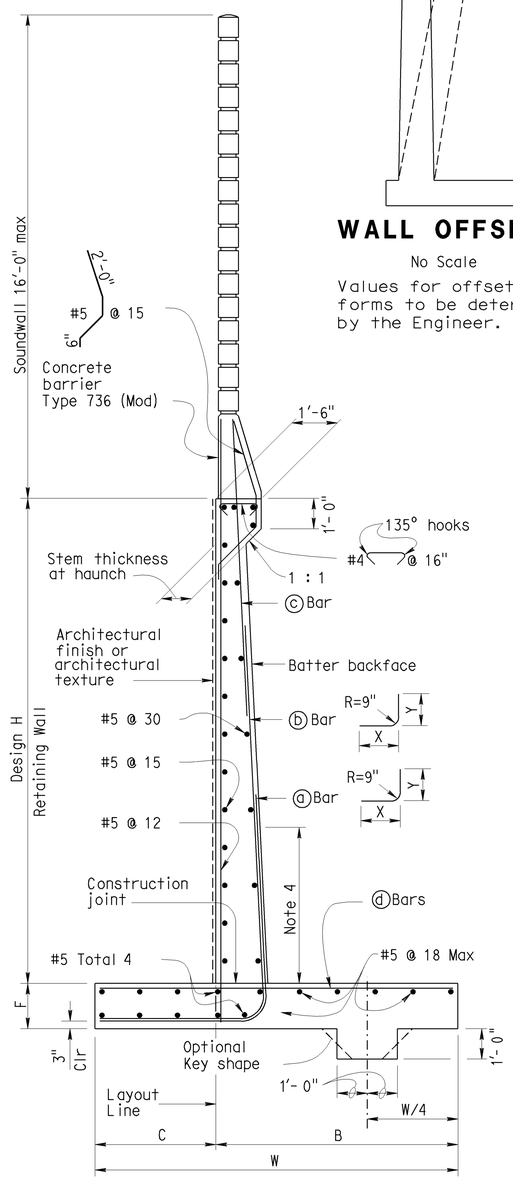

SPREAD FOOTING SECTION

No Scale

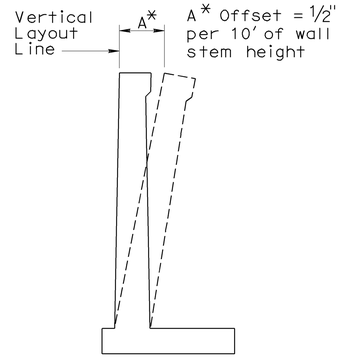

WALL OFFSET

No Scale

Values for offsetting forms to be determined by the Engineer.

A* Offset = ½" per 10′ of wall stem height

DESIGN DATA

DESIGN: Load Factor Design (LFD)

CONCRETE: Reinforced Concrete, f′c = 3600 psi
fy = 60,000 psi

LOADING CASE:
Level ground with 240 psf surcharge and 16′ Soundwall

Seismic Load	= 0.3 Dead Load
Wind Load	= 30 psf
Dead Load of Soundwall	= 1414 lb/ft
Dead Load of Barrier	= 372 lb/ft

SEISMIC LOAD: SOIL
Kh = 0.3g
Kv = 0.0
Kae : Mononobe-Okabe Method

SOIL: Ø= 34° γ= 120 pcf
Equivalent fluid pressure:
= 36 pcf for determination of toe pressure
= 27 pcf for determination of heel pressure

EXTERNAL STABILITY:
Group 1 : D + E + SC
Group 2 : D + E + SC + W
Group 3 : D + PYM

INTERNAL STABILITY (LFD):
Group A : βD + 1.7E + 1.7SC
Group B : βD + 1.7E + 1.3W
Group C (stem) : 1.0D + 1.0E + 1.0EQD + 1.0EQE
Group C (footing) : D + PYM

Where : β = 1.0 or 1.3 whichever controls design
D = Dead Load
E = Lateral Earth Pressure
SC = Surcharge
W = Wind load
EQD = Seismic Dead Load
EQE = Seismic Lateral Earth Pressure
PYM = Probable Yield Moment (1.3 x Nominal Yield Moment of Stem)

Dist	COUNTY	ROUTE	POST MILES TOTAL PROJECT	SHEET No.	TOTAL SHEETS
12	Ora	5	1.3/1.7	58	127

Joseph W. Sawtelle 01-22-09
REGISTERED CIVIL ENGINEER DATE

3-23-09
PLANS APPROVAL DATE

REGISTERED PROFESSIONAL ENGINEER — JOSEPH W. SAWTELLE — No. C60110 — Exp. 6/30/10 — CIVIL — STATE OF CALIFORNIA

THE STATE OF CALIFORNIA OR ITS OFFICERS OR AGENTS SHALL NOT BE RESPONSIBLE FOR THE ACCURACY OR COMPLETENESS OF ELECTRONIC COPIES OF THIS PLAN SHEET.

ORANGE COUNTY TRANSPORTATION AUTHORITY
550 SOUTH MAIN STREET
ORANGE, CA 92863

RMC, INC.
6 HUTTON CENTRE DRIVE
SUITE 1250
SANTA ANA, CA 92707

STANDARD DRAWING

FILE NO. xs14-220e

APPROVED BY G. WANG — RESPONSIBLE TECHNICAL SPECIALIST
APPROVAL DATE - -

RELEASED BY ROBERTO LACALLE — RESPONSIBLE OFFICE CHIEF
RELEASE DATE - -

STATE OF CALIFORNIA
DEPARTMENT OF TRANSPORTATION

DIVISION OF ENGINEERING SERVICES

CU 12231
EA 0G9401

BRIDGE NO. N/A
POST MILE 1.3/1.7

SOUNDWALL DETAILS SW-5

SOUNDWALL No. 83
RETAINING WALL TYPE 1SWB

DISREGARD PRINTS BEARING EARLIER REVISION DATES →

REVISION DATES (PRELIMINARY STAGE ONLY) | SHEET | OF

DS OSD 2147A (ENGLISH STANDARD DRAWING "XS" BORDER REV. 01/11/08)

ORIGINAL SCALE IN INCHES FOR REDUCED PLANS 0 1 2 3

30-MAR-2009 TIME PLOTTED => 07:08
USERNAME => trstrk
DGN FILE => c0g940ra005.dgn

Dist	COUNTY	ROUTE	POST MILES TOTAL PROJECT	SHEET No.	TOTAL SHEETS
12	Ora	5	1.3/1.7	59	127

REGISTERED CIVIL ENGINEER — 01-22-09 DATE

PLANS APPROVAL DATE — 3-23-09

JOSEPH W. SAWTELLE No. C 60110 Exp. 6/30/10 CIVIL — REGISTERED PROFESSIONAL ENGINEER — STATE OF CALIFORNIA

THE STATE OF CALIFORNIA OR ITS OFFICERS OR AGENTS SHALL NOT BE RESPONSIBLE FOR THE ACCURACY OR COMPLETENESS OF SCANNED COPIES OF THIS PLAN SHEET.

ORANGE COUNTY TRANSPORTATION AUTHORITY
550 SOUTH MAIN STREET
ORANGE, CA 92863

RMC, INC.
6 HUTTON CENTRE DRIVE
SUITE 1250
SANTA ANA, CA 92707

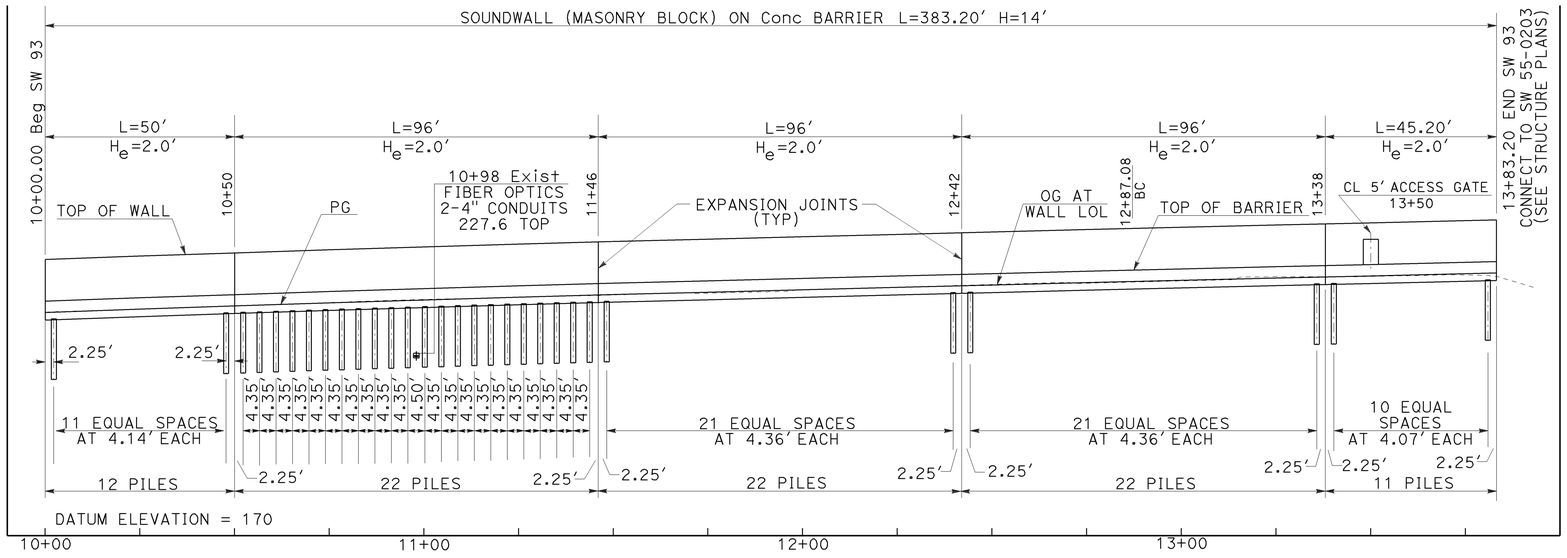

ELEVATION
1"=20' HORIZ. 1"=20' VERT.

SOUNDWALL ON BARRIER ELEVATIONS

WALL LOL Sta	TOP OF WALL	TOP OF BARRIER	PG
10+00	242.91	231.91	228.91
10+25	243.80	232.80	229.80
10+50	244.64	233.64	230.64
10+75	245.46	234.46	231.46
11+00	246.22	235.22	232.22
11+25	246.97	235.97	232.97
11+46	247.56	236.56	233.56
11+50	247.67	236.67	233.67
11+75	248.29	237.29	234.29
12+00	248.93	237.93	234.93

SOUNDWALL ON BARRIER ELEVATIONS

WALL LOL Sta	TOP OF WALL	TOP OF BARRIER	PG
12+25	249.55	238.55	235.55
12+42	249.98	238.98	235.98
12+50	250.18	239.18	236.18
12+75	250.84	239.84	236.84
13+00	251.43	240.43	237.43
13+25	252.01	241.01	238.01
13+38	252.30	241.30	238.30
13+50	252.57	241.57	238.57
13+75	253.17	242.17	239.17
13+83.20	253.37	242.37	239.37

NOTE:
5' ACCESS GATES SHALL BE INSTALLED PER STANDARD PLAN B15-12, B15-13 AND B15-14

CURVE DATA

No.	R	Δ	T	L
(1)	2000.00'	13°11'00"	231.11'	460.18'
(6)	1929.50'	13°11'00"	222.97'	443.96'

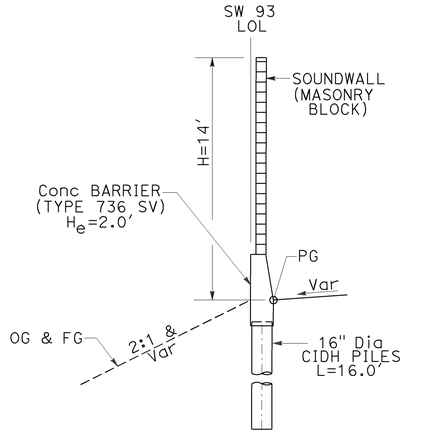

WALL TYPICAL SECTION
NO SCALE
Sta 10+00 TO Sta 13+83.20

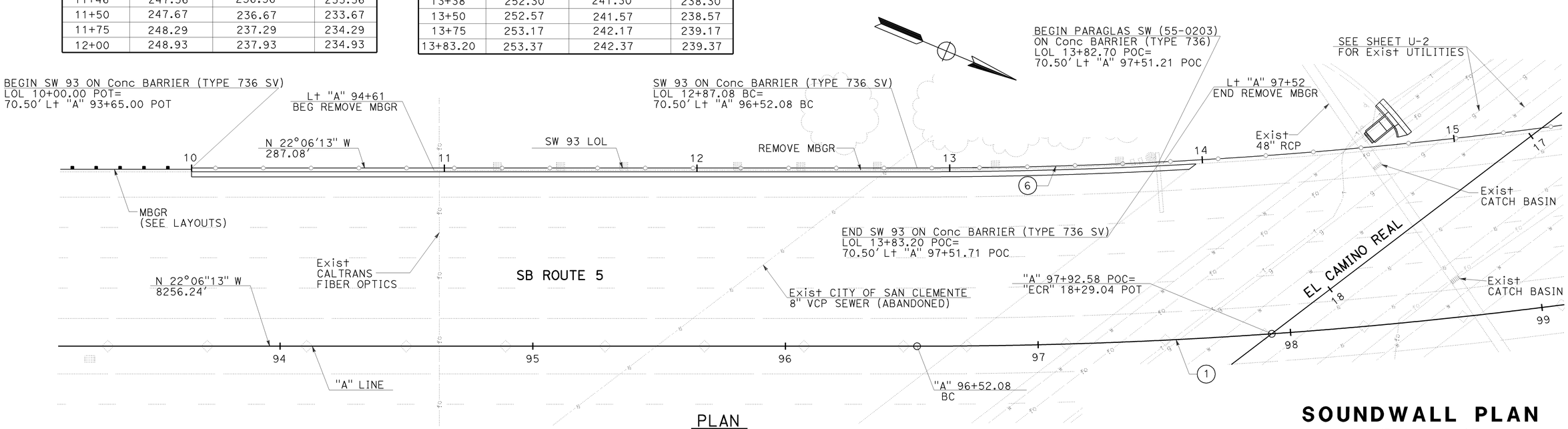

PLAN
1"=20'

SOUNDWALL PLAN
SOUNDWALL No.93
SCALE AS SHOWN

SW-6

THIS PLAN ACCURATE FOR SOUNDWALL AND RETAINING WALL WORK ONLY.

CALCULATED-DESIGNED BY
CHECKED BY
REVISED BY
DATE REVISED
C. SOSA
J. SAWTELLE
CONSULTANT FUNCTIONAL SUPERVISOR
JAMAL SALMAN
STATE OF CALIFORNIA - DEPARTMENT OF TRANSPORTATION
DESIGN F
Caltrans

LAST REVISION DATE PLOTTED => 30-MAR-2009
01-20-09 TIME PLOTTED => 06:59

BORDER LAST REVISED 4/11/2008
RELATIVE BORDER SCALE IS IN INCHES 0 1 2 3
USERNAME => trstrk
DGN FILE => c0g940rb001.dgn
CU 12231
EA 0G9401

Dist	COUNTY	ROUTE	POST MILES TOTAL PROJECT	SHEET No.	TOTAL SHEETS
12	Ora	5	1.3/1.7	60	127

REGISTERED CIVIL ENGINEER 01-22-09 DATE

3-23-09
PLANS APPROVAL DATE

REGISTERED PROFESSIONAL ENGINEER JOSEPH W. SAWTELLE No. C 60110 Exp. 6/30/10 CIVIL STATE OF CALIFORNIA

THE STATE OF CALIFORNIA OR ITS OFFICERS OR AGENTS SHALL NOT BE RESPONSIBLE FOR THE ACCURACY OR COMPLETENESS OF SCANNED COPIES OF THIS PLAN SHEET.

ORANGE COUNTY
TRANSPORTATION AUTHORITY
550 SOUTH MAIN STREET
ORANGE, CA 92863

RMC, INC.
6 HUTTON CENTRE DRIVE
SUITE 1250
SANTA ANA, CA 92707

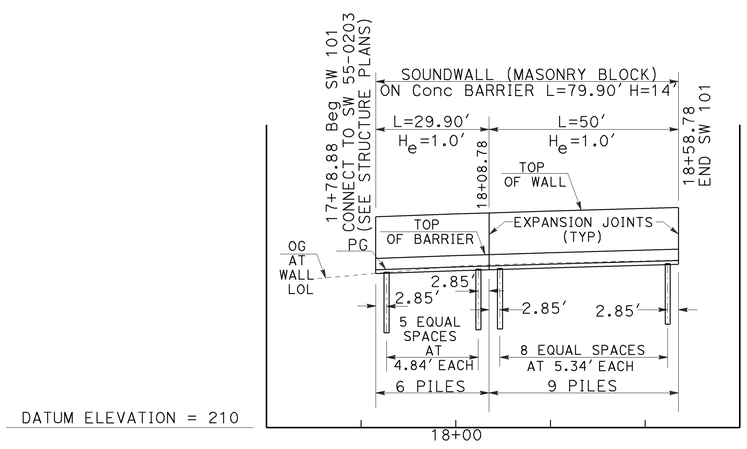

ELEVATION
1"=20' HORIZ. 1"=20' VERT.

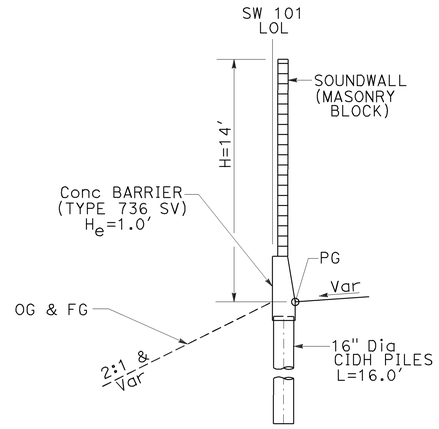

WALL TYPICAL SECTION
NO SCALE
Sta 17+78.88 TO Sta 18+58.78

SOUNDWALL ON BARRIER ELEVATIONS

WALL LOL Sta	TOP OF WALL	TOP OF BARRIER	PG
17+78.88	265.68	254.68	251.68
18+00	266.41	255.41	252.41
18+08.78	266.68	255.68	252.68
18+25	267.19	256.19	253.19
18+50	267.89	256.89	253.89
18+58.78	268.13	257.13	254.13

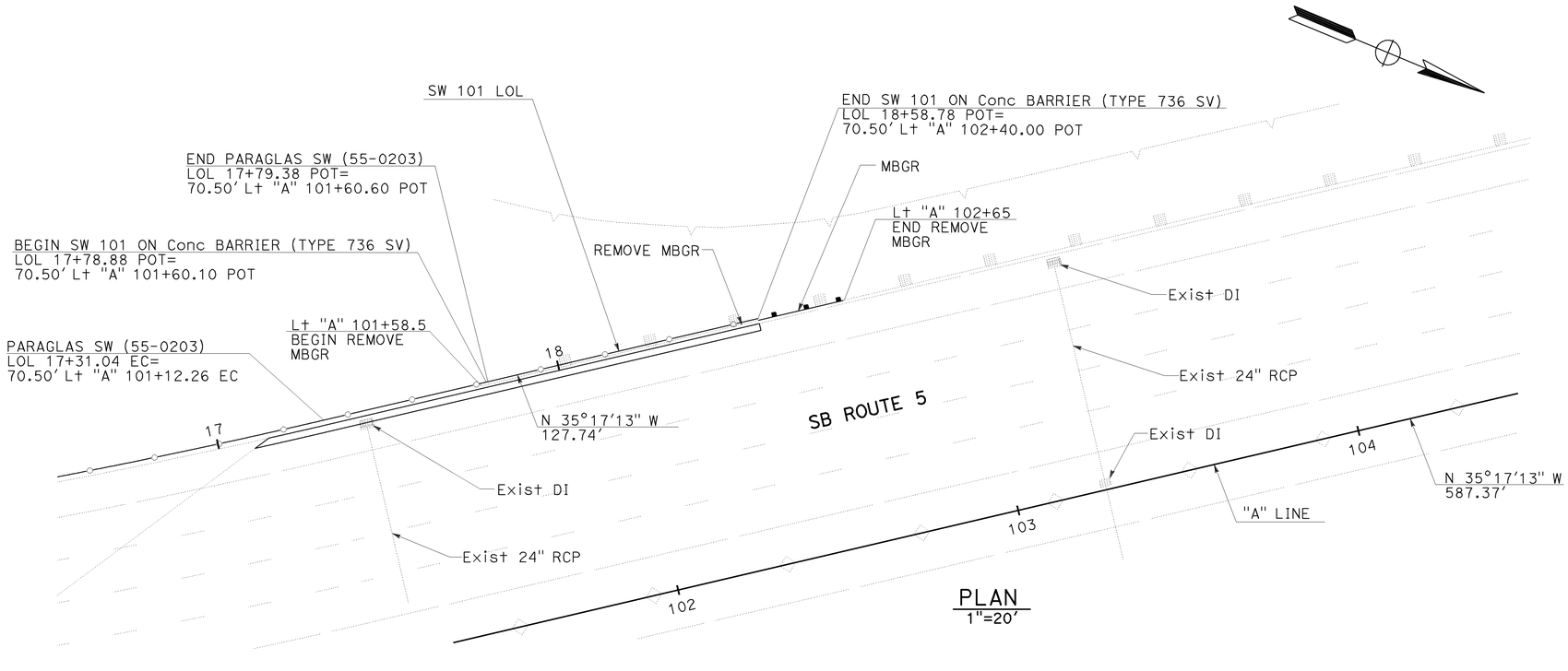

PLAN
1"=20'

SOUNDWALL PLAN

SOUNDWALL No. 101
SCALE AS SHOWN

SW-7

THIS PLAN ACCURATE FOR SOUNDWALL AND RETAINING WALL WORK ONLY.

STATE OF CALIFORNIA - DEPARTMENT OF TRANSPORTATION
Caltrans
DESIGN F
CONSULTANT FUNCTIONAL SUPERVISOR JAMAL SALMAN
CALCULATED-DESIGNED BY C. SOSA
CHECKED BY J. SAWTELLE
REVISED BY
DATE REVISED

LAST REVISION 01-21-09
DATE PLOTTED => 30-MAR-2009
TIME PLOTTED => 06:59

Dist	COUNTY	ROUTE	POST MILES TOTAL PROJECT	SHEET No.	TOTAL SHEETS
12	Ora	5	1.3/1.7	61	127

REGISTERED CIVIL ENGINEER — 01-22-09 DATE

3-23-09
PLANS APPROVAL DATE

REGISTERED PROFESSIONAL ENGINEER — JOSEPH W. SAWTELLE — No. C 60110 — Exp. 6/30/10 — CIVIL — STATE OF CALIFORNIA

THE STATE OF CALIFORNIA OR ITS OFFICERS OR AGENTS SHALL NOT BE RESPONSIBLE FOR THE ACCURACY OR COMPLETENESS OF SCANNED COPIES OF THIS PLAN SHEET.

ORANGE COUNTY TRANSPORTATION AUTHORITY
550 SOUTH MAIN STREET
ORANGE, CA 92863

RMC, INC.
6 HUTTON CENTRE DRIVE
SUITE 1250
SANTA ANA, CA 92707

STRUCTURE EXCAVATION (RETAINING WALL)

SHEET No.	LOCATION	CY
SW-1	FROM 9+93 "WALL LOL" SW No. 83 TO 11+29 "WALL LOL" SW No. 83	190
SW-3	FROM 18+24 "WALL LOL" SW No. 83 TO 19+44 "WALL LOL" SW No. 83	280
	TOTAL	470

STRUCTURE BACKFILL (RETAINING WALL)

SHEET No.	LOCATION	CY
SW-1	FROM 9+93 "WALL LOL" SW No. 83 TO 11+29 "WALL LOL" SW No. 83	190
SW-3	FROM 18+24 "WALL LOL" SW No. 83 TO 19+44 "WALL LOL" SW No. 83	210
	TOTAL	400

16" CIDH PILE (SOUNDWALL)

SHEET No.	LOCATION L=16′	No. OF PILES	LF
SW-2	FROM 14+25.97 "WALL LOL" SW No. 83 TO 16+35.85 "WALL LOL" SW No. 83	39	624
SW-2	FROM 16+48.55 "WALL LOL" SW No. 83 TO 16+72.73 "WALL LOL" SW No. 83	6	96
SW-4	FROM 23+75 "WALL LOL" SW No. 83 TO 24+87 "WALL LOL" SW No. 83	21	336
SW-4	FROM 25+01 "WALL LOL" SW No. 83 TO 25+88.51 "WALL LOL" SW No. 83	16	256
SW-6	FROM 10+00 "WALL LOL" SW No. 93 TO 13+83.20 "WALL LOL" SW No. 93	89	1424
SW-7	FROM 17+78.88 "WALL LOL" SW No. 101 TO 18+58.78 "WALL LOL" SW No. 101	15	240
	SUB-TOTAL		2976
	LOCATION L=16.25′		
SW-2, SW-3	FROM 16+72.73 "WALL LOL" SW No. 83 TO 18+24 "WALL LOL" SW No. 83	51	828.75
SW-3, SW-4	FROM 19+44 "WALL LOL" SW No. 83 TO 23+75 "WALL LOL" SW No. 83	145	2356.25
	SUB-TOTAL		3185
	TOTAL		6161

24" CIDH PILE (SOUNDWALL)

SHEET No.	LOCATION L=20.5′	No. OF PILES	LF	BAR Reinf (BRIDGE) LB
SW-2	FROM 16+35.85 "WALL LOL" SW No. 83 TO 16+48.55 "WALL LOL" SW No. 83	2	41	1600
SW-4	FROM 24+87 "WALL LOL" SW No. 83 TO 25+01 "WALL LOL" SW No. 83	2	41	1600
	SUB-TOTAL		82	3200
	LOCATION L=21.5′			
SW-1, SW-2	FROM 11+13 "WALL LOL" SW No. 83 TO 14+25.97 "WALL LOL" SW No. 83	28	602	23,240
	SUB-TOTAL		602	23,240
	TOTAL		684	✳ 26,440

✳ - FOR ADDITIONAL QUANTITIES, SEE STRUCTURE PLANS

STRUCTURAL CONCRETE, RETAINING WALL

SHEET No.	LOCATION	CY
SW-1	FROM 9+93 "WALL LOL" SW No. 83 TO 10+65 "WALL LOL" SW No. 83 (H=8′)	52
SW-1	FROM 10+65 "WALL LOL" SW No. 83 TO 11+13 "WALL LOL" SW No. 83 (H=6′)	29
SW-3	FROM 18+24 "WALL LOL" SW No. 83 TO 19+44 "WALL LOL" SW No. 83 (H=8′)	87
	TOTAL	168

MINOR CONCRETE (SOUNDWALL)

SHEET No.	LOCATION	CY
SW-1, SW-2	FROM 11+13 "WALL LOL" SW No. 83 TO 14+25.97 "WALL LOL" SW No. 83	58
SW-2	FROM 16+35.85 "WALL LOL" SW No. 83 TO 16+48.55 "WALL LOL" SW No. 83	2.4
SW-4	FROM 24+87 "WALL LOL" SW No. 83 TO 25+01 "WALL LOL" SW No. 83	2.6
	TOTAL	63

SOUNDWALL (BARRIER) (MASONRY BLOCK)

SHEET No.	LOCATION	SQFT
SW-1, SW-2	FROM 9+93 "WALL LOL" SW No. 83 TO 25+88.51 "WALL LOL" SW No. 83	18,412
SW-6	FROM 10+00 "WALL LOL" SW No. 93 TO 13+83.20 "WALL LOL" SW No. 93	4217
SW-7	FROM 17+78.88 "WALL LOL" SW No. 101 TO 18+58.78 "WALL LOL" SW No. 101	880
	TOTAL	23,509

SOUNDWALL QUANTITIES

SW-8

REVISED BY | DATE REVISED
C. SOSA | J. SAWTELLE
CALCULATED-DESIGNED BY | CHECKED BY
CONSULTANT FUNCTIONAL SUPERVISOR — JAMAL SALMAN
STATE OF CALIFORNIA - DEPARTMENT OF TRANSPORTATION — DESIGN F

LAST REVISION | DATE PLOTTED => 30-MAR-2009
01-21-09 | TIME PLOTTED => 06:59

BORDER LAST REVISED 4/11/2008
RELATIVE BORDER SCALE IS IN INCHES 0 1 2 3
USERNAME => trstrk
DGN FILE => c0g940rd001.dgn
CU 12231
EA 0G9401

Dist	COUNTY	ROUTE	POST MILES TOTAL PROJECT	SHEET No.	TOTAL SHEETS
12	Ora	5	1.3/1.7	62	127

REGISTERED CIVIL ENGINEER — DATE: 01-22-09

PLANS APPROVAL DATE: 3-23-09

REGISTERED PROFESSIONAL ENGINEER — JOSEPH W. SAWTELLE — No. C 60110 — Exp. 6/30/10 — CIVIL — STATE OF CALIFORNIA

THE STATE OF CALIFORNIA OR ITS OFFICERS OR AGENTS SHALL NOT BE RESPONSIBLE FOR THE ACCURACY OR COMPLETENESS OF SCANNED COPIES OF THIS PLAN SHEET.

ORANGE COUNTY TRANSPORTATION AUTHORITY
550 SOUTH MAIN STREET
ORANGE, CA 92863

RMC, INC.
6 HUTTON CENTRE DRIVE
SUITE 1250
SANTA ANA, CA 92707

BAR REINFORCING STEEL (RETAINING WALL)

SHEET No.	LOCATION	LB
SW-1	FROM 9+93 "WALL LOL" SW No. 83 TO 10+65 "WALL LOL" SW No. 83 (H= 8')	2160
SW-1	FROM 10+65 "WALL LOL" SW No. 83 TO 11+13 "WALL LOL" SW No. 83 (H= 6')	1440
SW-3	FROM 18+24 "WALL LOL" SW No. 83 TO 19+44 "WALL LOL" SW No. 83 (H= 8')	4800
TOTAL		8400

CONCRETE BARRIER

SHEET No.	LOCATION	TYPE 736 SV He=1 LF	TYPE 736 SV He=2 LF	TYPE 736 SV He=4 LF	TYPE 736 MODIFIED LF
SW-1	FROM 9+93 "WALL LOL" SW No. 83 TO 11+13 "WALL LOL" SW No. 83				120
SW-1, SW-2	FROM 11+13 "WALL LOL" SW No. 83 TO 16+72.73 "WALL LOL" SW No. 83	560			
SW-2, SW-3	FROM 16+72.73 "WALL LOL" SW No. 83 TO 18+24 "WALL LOL" SW No. 83			152	
SW-3	FROM 18+24 "WALL LOL" SW No. 83 TO 19+44 "WALL LOL" SW No. 83				120
SW-3, SW-4	FROM 19+44 "WALL LOL" SW No. 83 TO 23+75 "WALL LOL" SW No. 83			432	
SW-4	FROM 23+75 "WALL LOL" SW No. 83 TO 25+88.51 "WALL LOL" SW No. 83	214			
SW-6	FROM 10+00 "WALL LOL" SW No. 93 TO 13+83.20 "WALL LOL" SW No. 93		384		
SW-7	FROM 17+78.88 "WALL LOL" SW No. 101 TO 18+58.78 "WALL LOL" SW No. 101	80			
SUB-TOTAL		854	384	584	240
TOTAL		1822			✳ 240

5' SOUNDWALL ACCESS GATES

SHEET No.	LOCATION	EA (N)
SW-1	12+75 "WALL LOL" SW No. 83	1
SW-2	16+50 "WALL LOL" SW No. 83	1
SW-3	19+08 "WALL LOL" SW No. 83	1
SW-4	22+00 "WALL LOL" SW No. 83	1
SW-6	13+50 "WALL LOL" SW No. 93	1
TOTAL		5

(N) - NOT A SEPARATE PAY ITEM, FOR INFORMATION ONLY.

✳ - FOR ADDITIONAL QUANTITIES, SEE STRUCTURE PLANS

SOUNDWALL QUANTITIES

SW-9

REVISED BY | DATE REVISED

C. SOSA | J. SAWTELLE

CALCULATED-DESIGNED BY | CHECKED BY

CONSULTANT FUNCTIONAL SUPERVISOR: JAMAL SALMAN

STATE OF CALIFORNIA - DEPARTMENT OF TRANSPORTATION | DESIGN F

Caltrans

LAST REVISION | DATE PLOTTED => 30-MAR-2009 | 01-21-09 | TIME PLOTTED => 06:59

BORDER LAST REVISED 4/11/2008

RELATIVE BORDER SCALE IS IN INCHES 0 1 2 3

USERNAME => trstrk
DGN FILE => c0g940rd002.dgn

CU 12231

EA 0G9401

REFERENCE: CALTRANS SOIL & ROCK LOGGING, CLASSIFICATION, AND PRESENTATION MANUAL (JUNE 2007)

DIST	COUNTY	ROUTE	POST MILES TOTAL PROJECT	SHEET No	TOTAL SHEETS
12	Ora	5	1.3/1.7	63	127

01-22-09
REGISTERED PROFESSIONAL ENGINEER

3-23-09
PLANS APPROVAL DATE

REGISTERED PROFESSIONAL ENGINEER
DEAN CHANDRA
No. 2376
Exp. 6/30/09
GEOTECHNICAL
STATE OF CALIFORNIA

The State of California or its officers or agents shall not be responsible for the accuracy or completeness of electronic copies of this plan sheet.

ORANGE COUNTY TRANSPORTATION AUTHORITY
550 SOUTH MAIN STREET
ORANGE, CA 92863

LEIGHTON CONSULTING INC.
17781 COWAN
IRVINE, CA 92614

CEMENTATION

Description	Criteria
Weak	Crumbles or breaks with handling or little finger pressure.
Moderate	Crumbles or breaks with considerable finger pressure.
Strong	Will not crumble or break with finger pressure.

BOREHOLE IDENTIFICATION

Symbol	Hole Type	Description
Size	A	Auger Boring
Size	R P	Rotary drilled boring Rotary percussion boring (air)
Size	R	Rotary drilled diamond core
Size	HD HA	Hand driven (1-inch soil tube) Hand Auger
●	D	Dynamic Cone Penetration Boring
▲	CPT	Cone Penetration Test (ASTM D 5778-95)
⬚	O	Other

Note: Size in inches.

CONSISTENCY OF COHESIVE SOILS

Description	Unconfined Compressive Strength (tsf)	Pocket Penetrometer Measurement (tsf)	Torvane Measurement (tsf)	Field Approximation
Very Soft	< 0.25	< 0.25	< 0.12	Easily penetrated several inches by fist
Soft	0.25 to 0.50	0.25 to 0.50	0.12 to 0.25	Easily penetrated several inches by thumb
Medium Stiff	0.50 to 1.0	0.50 to 1.0	0.25 to 0.50	Penetrated several inches by thumb with moderate effort
Stiff	1 to 2	1 to 2	0.50 to 1.0	Readily indented by thumb but penetrated only with great effort
Very Stiff	2 to 4	2 to 4	1.0 to 2.0	Readily indented by thumbnail
Hard	> 4.0	> 4.0	> 2.0	Indented by thumbnail with difficulty

PLASTICITY OF FINE-GRAINED SOILS

Description	Criteria
Nonplastic	A 1/8-inch thread cannot be rolled at any water content.
Low	The thread can barely be rolled and the lump cannot be formed when drier than the plastic limit.
Medium	The thread is easy to roll and not much time is required to reach the plastic limit. The thread cannot be rerolled after reaching the plastic limit. The lump crumbles when drier than the plastic limit.
High	It takes considerable time rolling and kneading to reach the plastic limit. The thread can be rerolled several times after reaching the plastic limit. The lump can be formed without crumbling when drier than the plastic limit.

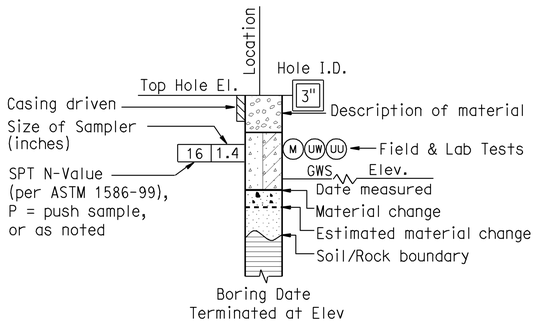

DRY BORING

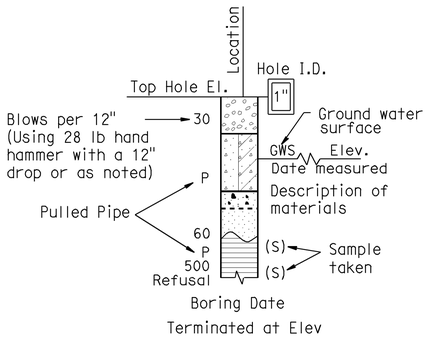

HAND BORING

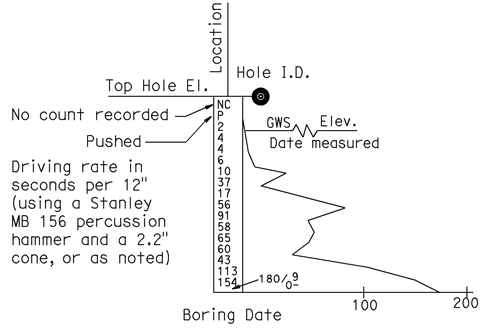

DYNAMIC CONE PENETRATION BORING

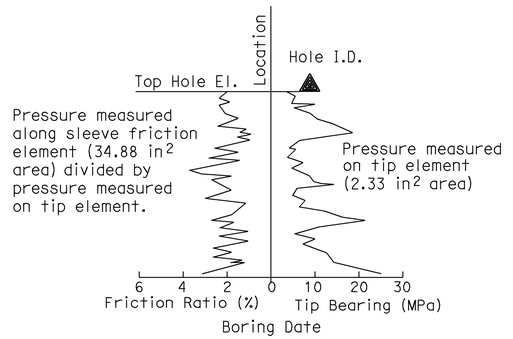

CONE PENETRATION TEST (CPT) SOUNDING

FIGURE 2 (SHEET 1 OF 9)

ENGINEERING SERVICES		GEOTECHNICAL SERVICES	STATE OF CALIFORNIA DEPARTMENT OF TRANSPORTATION	DIVISION OF ENGINEERING SERVICES STRUCTURE DESIGN	BRIDGE NO.	SOIL LEGEND
DESIGN OVERSIGHT	PREPARED BY	BUU TRAN		DESIGN BRANCH	55-0203	
SIGN OFF DATE	CHECKED BY	T. KIM			POST MILE 1.3/1.7	LOG OF TEST BORINGS 1 OF 9
GS LOTB SOIL LEGEND	ORIGINAL SCALE IN INCHES FOR REDUCED PLANS 0 1 2 3			CU 12231 EA 0G9401	DISREGARD PRINTS BEARING EARLIER REVISION DATES →	REVISION DATES / SHEET / OF

FILE => c0g940re001.dgn

USERNAME => ttstirk DATE PLOTTED => 30-MAR-2009 TIME PLOTTED => 06:59

REFERENCE: CALTRANS SOIL & ROCK LOGGING, CLASSIFICATION, AND PRESENTATION MANUAL (JUNE 2007)

GROUP SYMBOLS AND NAMES

Graphic/Symbol	Group Names	Graphic/Symbol	Group Names
GW	Well-graded GRAVEL Well-graded GRAVEL with SAND	CL	Lean CLAY Lean CLAY with SAND Lean CLAY with GRAVEL SANDY lean CLAY SANDY lean CLAY with GRAVEL GRAVELLY lean CLAY GRAVELLY lean CLAY with SAND
GP	Poorly graded GRAVEL Poorly graded GRAVEL with SAND		
GW-GM	Well-graded GRAVEL with SILT Well-graded GRAVEL with SILT and SAND	CL-ML	SILTY CLAY SILTY CLAY with SAND SILTY CLAY with GRAVEL SANDY SILTY CLAY SANDY SILTY CLAY with GRAVEL GRAVELLY SILTY CLAY GRAVELLY SILTY CLAY with SAND
GW-GC	Well-graded GRAVEL with CLAY (or SILTY CLAY) Well-graded GRAVEL with CLAY and SAND (or SILTY CLAY and SAND)		
GP-GM	Poorly graded GRAVEL with SILT Poorly graded GRAVEL with SILT and SAND	ML	SILT SILT with SAND SILT with GRAVEL SANDY SILT SANDY SILT with GRAVEL GRAVELLY SILT GRAVELLY SILT with SAND
GP-GC	Poorly graded GRAVEL with CLAY (or SILTY CLAY) Poorly graded GRAVEL with CLAY and SAND (or SILTY CLAY and SAND)		
GM	SILTY GRAVEL SILTY GRAVEL with SAND	OL	ORGANIC lean CLAY ORGANIC lean CLAY with SAND ORGANIC lean CLAY with GRAVEL SANDY ORGANIC lean CLAY SANDY ORGANIC lean CLAY with GRAVEL GRAVELLY ORGANIC lean CLAY GRAVELLY ORGANIC lean CLAY with SAND
GC	CLAYEY GRAVEL CLAYEY GRAVEL with SAND		
GC-GM	SILTY, CLAYEY GRAVEL SILTY, CLAYEY GRAVEL with SAND	OL	ORGANIC SILT ORGANIC SILT with SAND ORGANIC SILT with GRAVEL SANDY ORGANIC SILT SANDY ORGANIC SILT with GRAVEL GRAVELLY ORGANIC SILT GRAVELLY ORGANIC SILT with SAND
SW	Well-graded SAND Well-graded SAND with GRAVEL		
SP	Poorly graded SAND Poorly graded SAND with GRAVEL	CH	Fat CLAY Fat CLAY with SAND Fat CLAY with GRAVEL SANDY fat CLAY SANDY fat CLAY with GRAVEL GRAVELLY fat CLAY GRAVELLY fat CLAY with SAND
SW-SM	Well-graded SAND with SILT Well-graded SAND with SILT and GRAVEL		
SW-SC	Well-graded SAND with CLAY (or SILTY CLAY) Well-graded SAND with CLAY and GRAVEL (or SILTY CLAY and GRAVEL)	MH	Elastic SILT Elastic SILT with SAND Elastic SILT with GRAVEL SANDY elastic SILT SANDY elastic SILT with GRAVEL GRAVELLY elastic SILT GRAVELLY elastic SILT with SAND
SP-SM	Poorly graded SAND with SILT Poorly graded SAND with SILT and GRAVEL		
SP-SC	Poorly graded SAND with CLAY (or SILTY CLAY) Poorly graded SAND with CLAY and GRAVEL (or SILTY CLAY and GRAVEL)	OH	ORGANIC fat CLAY ORGANIC fat CLAY with SAND ORGANIC fat CLAY with GRAVEL SANDY ORGANIC fat CLAY SANDY ORGANIC fat CLAY with GRAVEL GRAVELLY ORGANIC fat CLAY GRAVELLY ORGANIC fat CLAY with SAND
SM	SILTY SAND SILTY SAND with GRAVEL		
SC	CLAYEY SAND CLAYEY SAND with GRAVEL	OH	ORGANIC elastic SILT ORGANIC elastic SILT with SAND ORGANIC elastic SILT with GRAVEL SANDY ORGANIC elastic SILT SANDY ORGANIC elastic SILT with GRAVEL GRAVELLY ORGANIC elastic SILT GRAVELLY ORGANIC elastic SILT with SAND
SC-SM	SILTY, CLAYEY SAND SILTY, CLAYEY SAND with GRAVEL		
PT	PEAT	OL/OH	ORGANIC SOIL ORGANIC SOIL with SAND ORGANIC SOIL with GRAVEL SANDY ORGANIC SOIL SANDY ORGANIC SOIL with GRAVEL GRAVELLY ORGANIC SOIL GRAVELLY ORGANIC SOIL with SAND
	COBBLES COBBLES and BOULDERS BOULDERS		

FIELD AND LABORATORY TESTING

- (C) Consolidation (ASTM D 2435)
- (CL) Collapse Potential (ASTM D 5333)
- (CP) Compaction Curve (CTM 216)
- (CR) Corrosivity Testing (CTM 643, CTM 422, CTM 417)
- (CU) Consolidated Undrained Triaxial (ASTM D 4767)
- (DS) Direct Shear (ASTM D 3080)
- (EI) Expansion Index (ASTM D 4829)
- (M) Moisture Content (ASTM D 2216)
- (OC) Organic Content-% (ASTM D 2974)
- (P) Permeability (CTM 220)
- (PA) Particle Size Analysis (ASTM D 422)
- (PI) Plasticity Index (AASHTO T 90) Liquid Limit (AASHTO T 89)
- (PL) Point Load Index (ASTM D 5731)
- (PM) Pressure Meter
- (PP) Pocket Penetrometer
- (R) R-Value (CTM 301)
- (SE) Sand Equivalent (CTM 217)
- (SG) Specific Gravity (AASHTO T 100)
- (SL) Shrinkage Limit (ASTM D 427)
- (SW) Swell Potential (ASTM D 4546)
- (TV) Pocket Torvane
- (UC) Unconfined Compression-Soil (ASTM D 2166) Unconfined Compression-Rock (ASTM D 2938)
- (UU) Unconsolidated Undrained Triaxial (ASTM D 2850)
- (UW) Unit Weight (ASTM D 4767)
- (VS) Vane Shear (AASHTO T 223)

DIST	COUNTY	ROUTE	POST MILES TOTAL PROJECT	SHEET No	TOTAL SHEETS
12	Ora	5	1.3/1.7	64	127

REGISTERED PROFESSIONAL ENGINEER — 01-22-09

3-23-09
PLANS APPROVAL DATE

REGISTERED PROFESSIONAL ENGINEER — BUU CHANDRA — No. 2376 — Exp. 6/30/09 — GEOTECHNICAL — STATE OF CALIFORNIA

The State of California or its officers or agents shall not be responsible for the accuracy or completeness of electronic copies of this plan sheet.

ORANGE COUNTY TRANSPORTATION AUTHORITY 550 SOUTH MAIN STREET ORANGE, CA 92863	LEIGHTON CONSULTING INC. 17781 COWAN IRVINE, CA 92614

APPARENT DENSITY OF COHESIONLESS SOILS

Description	SPT N_{60} (Blows / 12 inches)
Very loose	0 - 4
Loose	5 - 10
Medium Dense	11 - 30
Dense	31 - 50
Very Dense	> 50

MOISTURE

Description	Criteria
Dry	Absence of moisture, dusty, dry to the touch
Moist	Damp but no visible water
Wet	Visible free water, usually soil is below water table

PERCENT OR PROPORTION OF SOILS

Description	Criteria
Trace	Particles are present but estimated to be less than 5%
Few	5 to 10%
Little	15 to 25%
Some	30 to 45%
Mostly	50 to 100%

PARTICLE SIZE

Description		Size
Boulder		> 12"
Cobble		3" to 12"
Gravel	Coarse	3/4" to 3"
	Fine	No. 4 to 3/4"
Sand	Coarse	No. 10 to No. 4
	Medium	No. 40 to No. 10
	Fine	No. 200 to No. 40

FIGURE 2 (SHEET 2 OF 9)

ENGINEERING SERVICES	GEOTECHNICAL SERVICES	STATE OF CALIFORNIA DEPARTMENT OF TRANSPORTATION	DIVISION OF ENGINEERING SERVICES STRUCTURE DESIGN	BRIDGE NO.	SOIL LEGEND
DESIGN OVERSIGHT	PREPARED BY: BUU TRAN		DESIGN BRANCH	55-0203	LOG OF TEST BORINGS 2 OF 9
SIGN OFF DATE	CHECKED BY: T. KIM			POST MILE 1.3/1.7	
GS LOTB SOIL LEGEND	ORIGINAL SCALE IN INCHES FOR REDUCED PLANS 0 1 2 3	CU 12231 EA 009401		DISREGARD PRINTS BEARING EARLIER REVISION DATES →	REVISION DATES / SHEET / OF

FILE => c0g940re002.dgn

USERNAME => trsitk DATE PLOTTED => 30-MAR-2009 TIME PLOTTED => 06:59

DIST	COUNTY	ROUTE	POST MILES TOTAL PROJECT	SHEET No	TOTAL SHEETS
12	Ora	5	1.3/1.7	65	127

REGISTERED PROFESSIONAL ENGINEER — 01-22-09

REGISTERED PROFESSIONAL ENGINEER — ROJAN CHANDRA — No. 2376 — Exp. 6/30/09 — GEOTECHNICAL — STATE OF CALIFORNIA

3-23-09
PLANS APPROVAL DATE

The State of California or its officers or agents shall not be responsible for the accuracy or completeness of electronic copies of this plan sheet.

ORANGE COUNTY TRANSPORTATION AUTHORITY
550 SOUTH MAIN STREET
ORANGE, CA 92863

LEIGHTON CONSULTING INC.
17781 COWAN
IRVINE, CA 92614

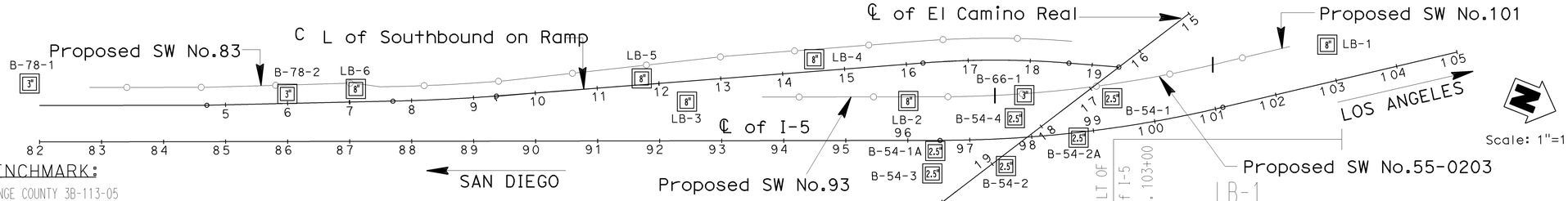

BENCHMARK:

ORANGE COUNTY 3B-113-05
DESCRIBED BY OCS 2005 - FOUND 3 3/4" OCS ALUMINUM BENCHMARK DISK STAMPED "3B-113-05" SET IN THE TOP SOUTHWESTERLY CORNER OF A 6.4 FT. BY 9.5 FT. CONCRETE CATCH BASIN. MONUMENT IS LOCATED IN THE SOUTHEASTERLY CORNER OF THE INTERSECTION OFAVENIDA DEL PRESIDENTE AND AVENIDA MENDOCINO, 36 FT. EASTERLY OF THE CENTERLINE OF DEL PRESIDENTE, AND 63 FT. SOUTHERLY OF THE CENTERLINE OF MENDOCINO. MONUMENT IS SET LEVEL WITH THE SIDEWALK

180.998 FEET, 1995 ADJUSTMENT (2005 YEAR LEVELED)

LEGEND

LB-3 — 8" — BORING BY LEIGHTON CONSULTING INC., 2008

B-54-4 — 2.5" — BORING BY OTHERS (CALTRANS, 1957)

B-66-1 — 3" — BORING BY OTHERS (CALTRANS, 1979)

						6 inches asphalt concrete.
61	2.4	127	9.6	M	UW	Silty SAND (SM), dense, brownish grey, moist, medium to coarse grained, predominantly coarse grained.
37	2.4	125	9.5	C		medium dense.
18	1.4					trace of clay, dark brown
33	2.4	129	7.8	M	UW	yellowish brown to grey.
7	1.4					with clay, loose, light yellowish grey, fine grained.
						12 inches of asphalt concrete.
24	2.4	127	7.6	M	UW	Silty SAND (SM), medium dense, grey with reddish mottling, moist, fine to coarse grained, predominantly fine grained.
17	2.4	114	17.6	M	UW	brownish grey, very moist, fine to medium grained, predominantly medium grained.
54	2.4	119	7.4	M	UW	dense, yellowish grey, moist, fine to coarse grained, trace of fine to coarse gravel.
15	1.4					
33	2.4	121	10.4	M	UW	medium dense, brownish grey, moist, trace of clay.
13	1.4					yellowish brown, fine grained.
36	2.4	116	13.1	M	UW	dark grey, very moist, fine to medium grained, trace of clay.
10	1.4					loose, yellowish grey, moist.
21	2.4	107	9.6	DS		dark brown, moist, fine grained.
14	1.4					medium dense, light yellowish grey.
57	2.4	112	11.5	M	UW	dense.
24	1.4					medium dense.

Boring Date: 4/22/08
Terminated at Elev. 184.5'

No free groundwater encountered during drilling.
Hole backfilled with soil cuttings and patched with concrete.

30	2.4	111	14.9	DS		Sandy Lean CLAY (CL), very stiff, dark brown, moist.
35	1.4					Silty SAND to Sandy SILT (SM/ML), dense, light yellowish grey, slightly moist
50/3"	2.4	123	9.2	M	UW	Silty SAND (SM), very dense, yellowish grey, moist, fine grained.
29	1.4					Silty SAND to Sandy SILT (SM/ML), medium dense, yellowish grey, moist, fine grained sand.
50/4"	2.4	109	14.6	M	UW	very dense, grey with reddish white mottling, very moist.
30	1.4					dense
81/10"	2.4	117	8.6	M	UW	Silty SAND (SM), very dense, light yellowish grey, moist, fine grained.

Boring Date: 4/23/08
Terminated at Elev. 204.6'

No free groundwater encountered during drilling.
Hole backfilled with soil cuttings and patched with concrete.

Vertical Scale: 1"=5'
Horizontal Scale: 1"=100'

FIGURE 2 (SHEET 3 OF 9)

ENGINEERING SERVICES	GEOTECHNICAL SERVICES	STATE OF CALIFORNIA DEPARTMENT OF TRANSPORTATION	DIVISION OF ENGINEERING SERVICES STRUCTURE DESIGN	BRIDGE NO.	I-5/EL-CAMINO REAL SOUNDWALL
DESIGN OVERSIGHT / SIGN OFF DATE	DRAWN BY: BUU TRAN; CHECKED BY: T. KIM	FIELD INVESTIGATION BY: S. PULIJALA	DESIGN BRANCH	POST MILES 1.3/1.7	LOG OF TEST BORINGS 3 OF 9
OGS CIVIL LOG OF TEST BORINGS SHEET	ORIGINAL SCALE IN INCHES FOR REDUCED PLANS 0 1 2 3	CU 12231 EA 0G9401	DISREGARD PRINTS BEARING EARLIER REVISION DATES →	REVISION DATES	SHEET OF

FILE => c0g940re003.dgn

USERNAME = frostrk DATE PLOTTED => 30-MAR-2009 TIME PLOTTED => 07:00

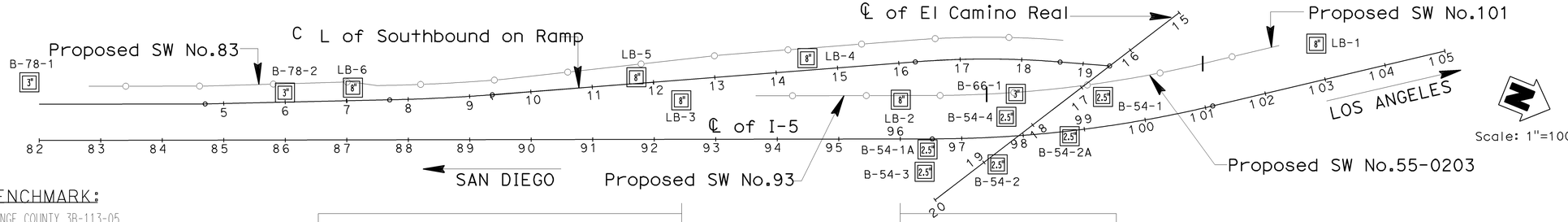

Scale: 1"=100'

DIST	COUNTY	ROUTE	POST MILES TOTAL PROJECT	SHEET No	TOTAL SHEETS
12	Ora	5	1.3/1.7	66	127

REGISTERED PROFESSIONAL ENGINEER — 01-22-09

3-23-09
PLANS APPROVAL DATE

REGISTERED PROFESSIONAL ENGINEER — ARJAN CHANDRA — No. 2376 — Exp. 6/30/09 — GEOTECHNICAL — STATE OF CALIFORNIA

The State of California or its officers or agents shall not be responsible for the accuracy or completeness of electronic copies of this plan sheet.

ORANGE COUNTY
TRANSPORTATION AUTHORITY
550 SOUTH MAIN STREET
ORANGE, CA 92863

LEIGHTON CONSULTING INC.
17781 COWAN
IRVINE, CA 92614

BENCHMARK:

ORANGE COUNTY 3B-113-05
DESCRIBED BY OCS 2005 - FOUND 3 3/4" OCS ALUMINUM BENCHMARK DISK STAMPED "3B-113-05" SET IN THE TOP SOUTHWESTERLY CORNER OF A 6.4 FT. BY 9.5 FT. CONCRETE CATCH BASIN. MONUMENT IS LOCATED IN THE SOUTHEASTERLY CORNER OF THE INTERSECTION OFAVENIDA DEL PRESIDENTE AND AVENIDA MENDOCINO, 36 FT. EASTERLY OF THE CENTERLINE OF DEL PRESIDENTE, AND 63 FT. SOUTHERLY OF THE CENTERLINE OF MENDOCINO. MONUMENT IS SET LEVEL WITH THE SIDEWALK

180.998 FEET, 1995 ADJUSTMENT (2005 YEAR LEVELED)

FIGURE 2 (SHEET 4 OF 9)

ENGINEERING SERVICES	GEOTECHNICAL SERVICES		STATE OF CALIFORNIA DEPARTMENT OF TRANSPORTATION	DIVISION OF ENGINEERING SERVICES STRUCTURE DESIGN	BRIDGE NO. 55-0203	I-5/EL-CAMINO REAL SOUNDWALL
DESIGN OVERSIGHT	DRAWN BY: BUU TRAN	FIELD INVESTIGATION BY: S. PULIJALA		DESIGN BRANCH	POST MILES 1.3/1.7	LOG OF TEST BORINGS 4 OF 9
SIGN OFF DATE	CHECKED BY: T. KIM			CU 12231 EA 0G9401	DISREGARD PRINTS BEARING EARLIER REVISION DATES →	REVISION DATES / SHEET / OF

OGS CIVIL LOG OF TEST BORINGS SHEET

ORIGINAL SCALE IN INCHES FOR REDUCED PLANS 0 1 2 3

FILE => c0g940re004.dgn

USERNAME => trsmtk DATE PLOTTED => 30-MAR-2009 TIME PLOTTED => 07:00

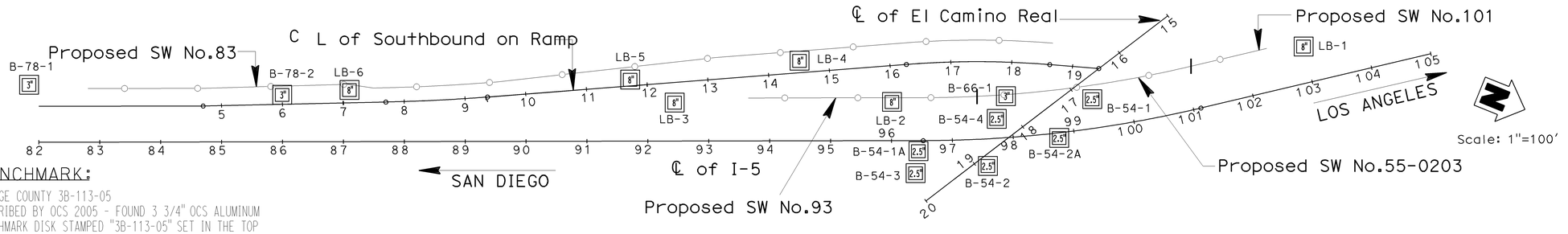

DIST	COUNTY	ROUTE	POST MILES TOTAL PROJECT	SHEET No	TOTAL SHEETS
12	Ora	5	1.3/1.7	67	127

REGISTERED PROFESSIONAL ENGINEER — 01-22-09

3-23-09
PLANS APPROVAL DATE

REGISTERED PROFESSIONAL ENGINEER — DJAN CHANDRA — No. 2376 — Exp. 6/30/09 — GEOTECHNICAL — STATE OF CALIFORNIA

The State of California or its officers or agents shall not be responsible for the accuracy or completeness of electronic copies of this plan sheet.

ORANGE COUNTY TRANSPORTATION AUTHORITY
550 SOUTH MAIN STREET
ORANGE, CA 92863

LEIGHTON CONSULTING INC.
17781 COWAN
IRVINE, CA 92614

BENCHMARK:

ORANGE COUNTY 3B-113-05
DESCRIBED BY OCS 2005 - FOUND 3 3/4" OCS ALUMINUM BENCHMARK DISK STAMPED "3B-113-05" SET IN THE TOP SOUTHWESTERLY CORNER OF A 6.4 FT. BY 9.5 FT. CONCRETE CATCH BASIN. MONUMENT IS LOCATED IN THE SOUTHEASTERLY CORNER OF THE INTERSECTION OFAVENIDA DEL PRESIDENTE AND AVENIDA MENDOCINO, 36 FT. EASTERLY OF THE CENTERLINE OF DEL PRESIDENTE, AND 63 FT. SOUTHERLY OF THE CENTERLINE OF MENDOCINO. MONUMENT IS SET LEVEL WITH THE SIDEWALK

180.998 FEET, 1995 ADJUSTMENT (2005 YEAR LEVELED)

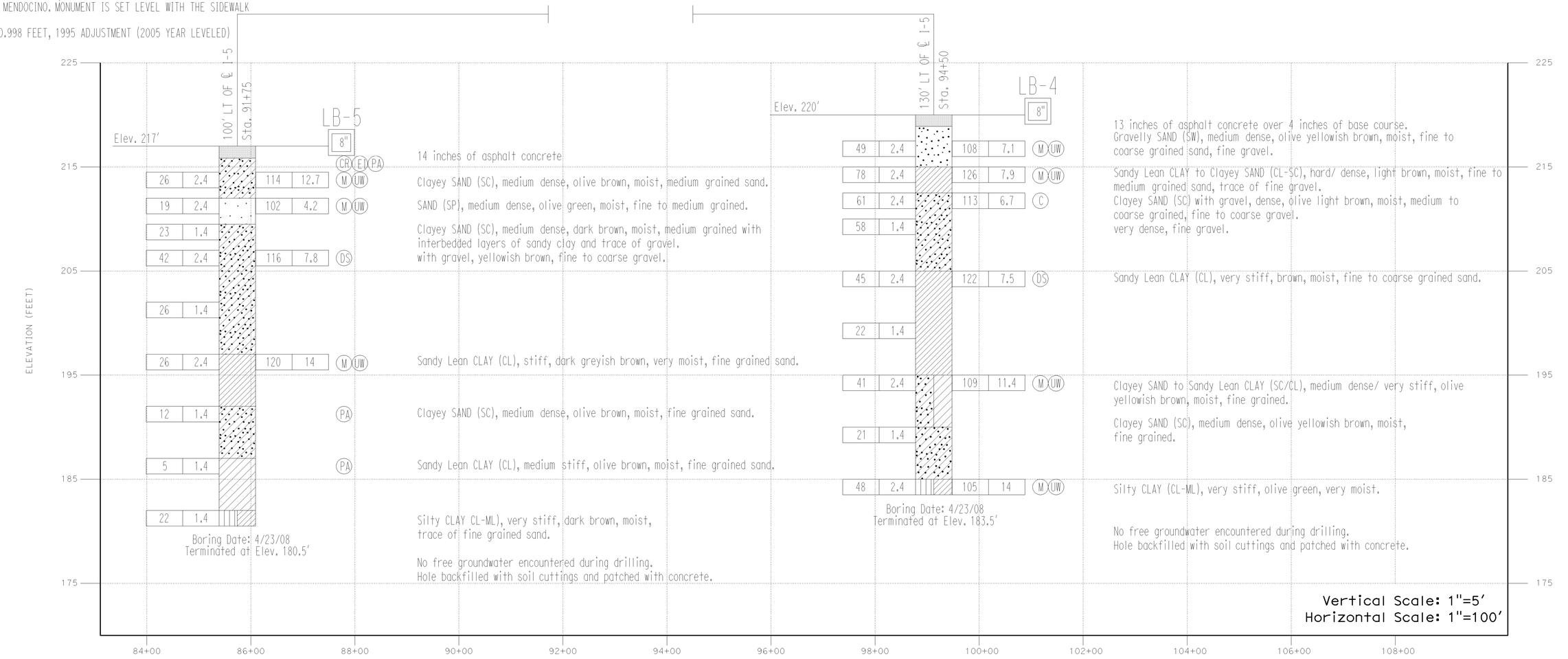

FIGURE 2 (SHEET 5 OF 9)

ENGINEERING SERVICES	GEOTECHNICAL SERVICES	STATE OF CALIFORNIA DEPARTMENT OF TRANSPORTATION	DIVISION OF ENGINEERING SERVICES STRUCTURE DESIGN	BRIDGE NO. 55-0203	I-5/EL-CAMINO REAL SOUNDWALL
DESIGN OVERSIGHT / SIGN OFF DATE	DRAWN BY: BUU TRAN; CHECKED BY: T. KIM	FIELD INVESTIGATION BY: S. PULIJALA	DESIGN BRANCH	POST MILES 1.3/1.7	LOG OF TEST BORINGS 5 OF 9
OGS CIVIL LOG OF TEST BORINGS SHEET	ORIGINAL SCALE IN INCHES FOR REDUCED PLANS 0 1 2 3	CU 12231 EA 0G9401	DISREGARD PRINTS BEARING EARLIER REVISION DATES →	REVISION DATES	SHEET OF

FILE => c0g940re005.dgn

USERNAME => rtstrk DATE PLOTTED => 30-MAR-2009 TIME PLOTTED => 07:00

DIST	COUNTY	ROUTE	POST MILES TOTAL PROJECT	SHEET No	TOTAL SHEETS
12	Ora	5	1.3/1.7	68	127

REGISTERED PROFESSIONAL ENGINEER — 01-22-09

3-23-09
PLANS APPROVAL DATE

REGISTERED PROFESSIONAL ENGINEER — ROJAN CHANDRA — No. 2376 — Exp. 6/30/09 — GEOTECHNICAL — STATE OF CALIFORNIA

The State of California or its officers or agents shall not be responsible for the accuracy or completeness of electronic copies of this plan sheet.

ORANGE COUNTY
TRANSPORTATION AUTHORITY
550 SOUTH MAIN STREET
ORANGE, CA 92863

LEIGHTON CONSULTING INC.
17781 COWAN
IRVINE, CA 92614

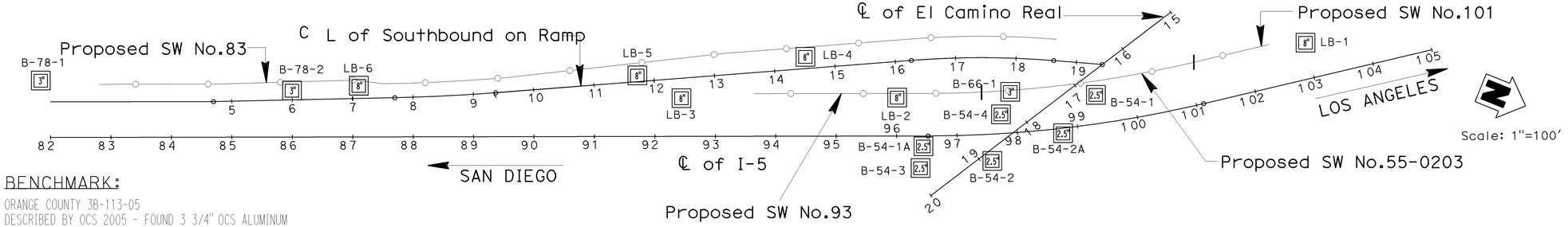

BENCHMARK:

ORANGE COUNTY 3B-113-05
DESCRIBED BY OCS 2005 - FOUND 3 3/4" OCS ALUMINUM BENCHMARK DISK STAMPED "3B-113-05" SET IN THE TOP SOUTHWESTERLY CORNER OF A 6.4 FT. BY 9.5 FT. CONCRETE CATCH BASIN. MONUMENT IS LOCATED IN THE SOUTHEASTERLY CORNER OF THE INTERSECTION OF AVENIDA DEL PRESIDENTE AND AVENIDA MENDOCINO, 36 FT. EASTERLY OF THE CENTERLINE OF DEL PRESIDENTE, AND 63 FT. SOUTHERLY OF THE CENTERLINE OF MENDOCINO. MONUMENT IS SET LEVEL WITH THE SIDEWALK

180.998 FEET, 1995 ADJUSTMENT (2005 YEAR LEVELED)

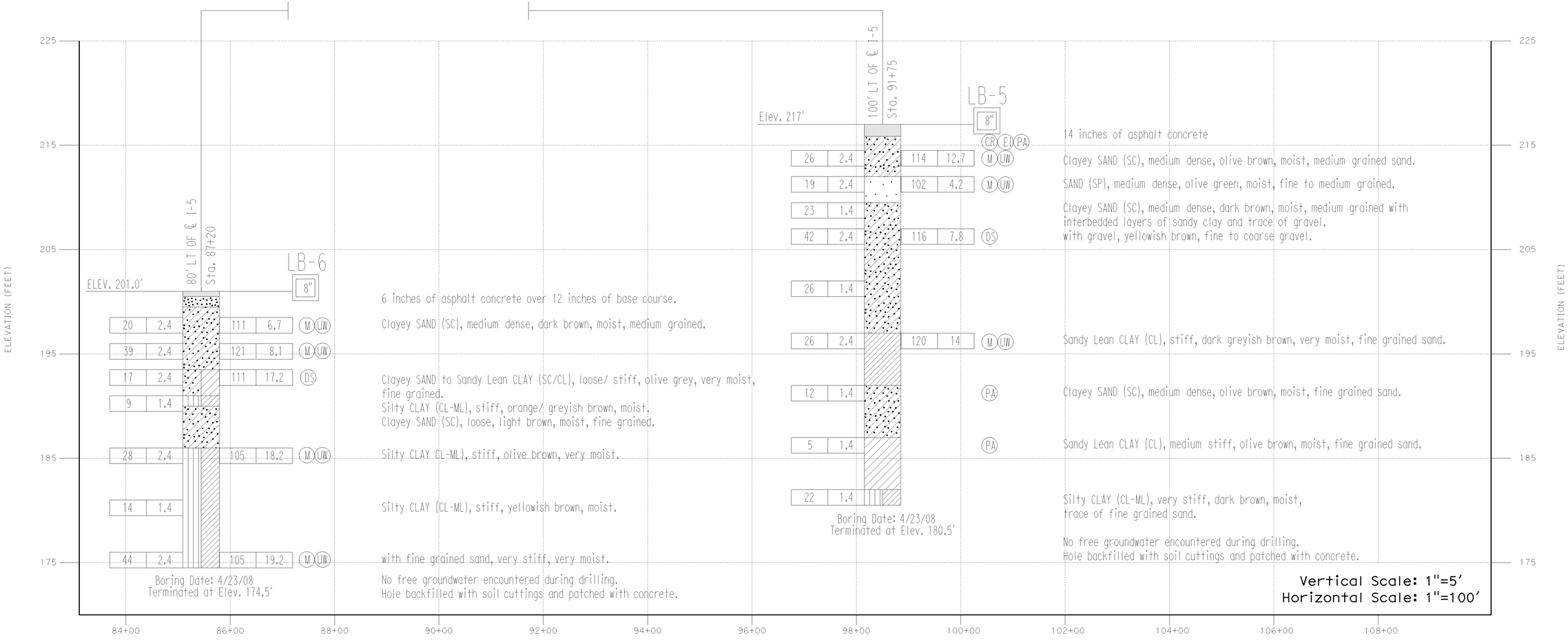

FIGURE 2 (SHEET 6 OF 9)

ENGINEERING SERVICES	GEOTECHNICAL SERVICES	STATE OF CALIFORNIA DEPARTMENT OF TRANSPORTATION	DIVISION OF ENGINEERING SERVICES STRUCTURE DESIGN	BRIDGE NO.	I-5/EL-CAMINO REAL SOUNDWALL
DESIGN OVERSIGHT / SIGN OFF DATE	DRAWN BY: BUU TRAN; CHECKED BY: T. KIM; FIELD INVESTIGATION BY: S. PULIJALA		DESIGN BRANCH	55-0203	
				POST MILES 1.3/1.7	LOG OF TEST BORINGS 6 OF 9
OGS CIVIL LOG OF TEST BORINGS SHEET	ORIGINAL SCALE IN INCHES FOR REDUCED PLANS 0 1 2 3	CU 12231 EA 0G9401		DISREGARD PRINTS BEARING EARLIER REVISION DATES →	REVISION DATES / SHEET / OF

FILE => c0g940re006.dgn

USERNAME => trsmth DATE PLOTTED => 30-MAR-2009 TIME PLOTTED => 07:00

FED. ROAD DIV. NO.	STATE	F. A. PROJECT NO.	SHEET NO.	TOTAL SHEETS
7	CALIF.			

DIST	COUNTY	ROUTE	POST MILES TOTAL PROJECT	SHEET No	TOTAL SHEETS
12	Ora	5	1.3/1.7	69	127

To accompany plans dated 3-23-09

DIST.	COUNTY	ROUTE	SECTION	SHEET NO	TOTAL SHEETS
07	Ora	5	00/6-1	475	538
	SD	5	47L/57R		

Robert W. Reynolds #165
CENTER OF EXPERIMENTATION AND RESEARCH
DATE APPROVED March 12, 1979

BENCH MARK

B.M. 96-S.Cle.-58 Elev. 235.78
Top of brass cap in type "A" survey
Mon. on ℄ existing Rte. 5 Sta. 95+
99.45.

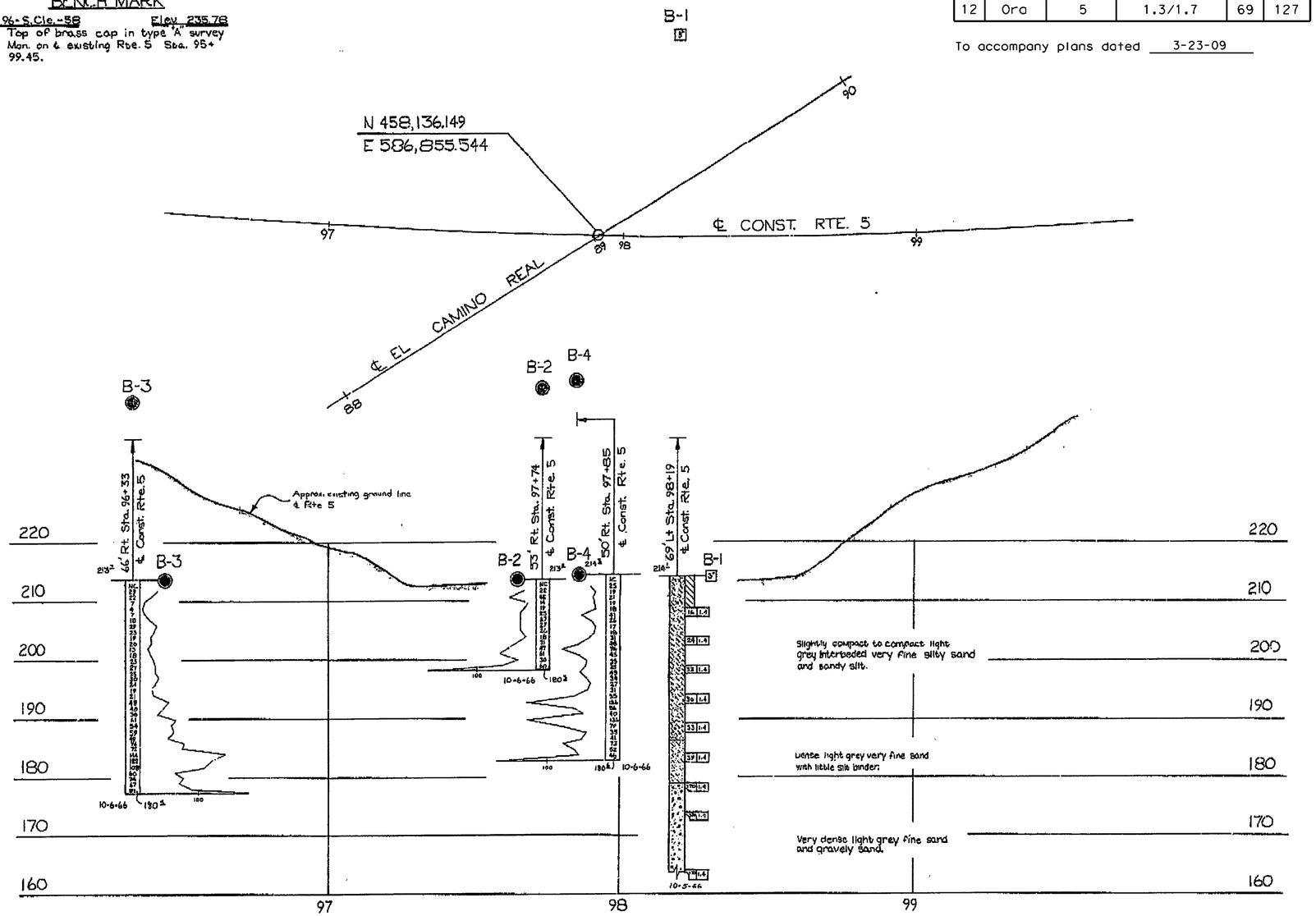

PLAN

Scale: 1" = 20'

NO GROUND ... DATE 10-1966

AS BUILT PLANS
Contract No. 07-105274
Date Completed
Document No.

PROFILE

Scale: Vert 1" = 10'
Horiz. 1" = 20'

NO AS BUILT CORRECTION

AS BUILT
CORRECTIONS BY W. Lohse
CONTRACT NO. 07-105274
DATE 4-1-83 and 10-14-83

SHEET	OF
20	20

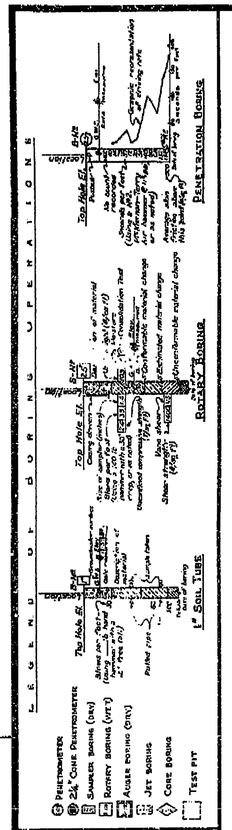

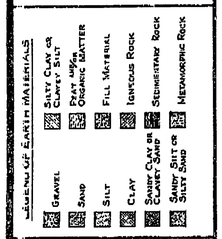

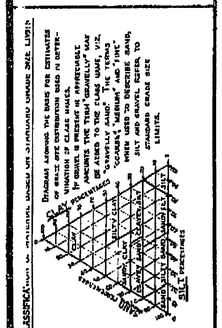

NOTE: Classification of earth material as shown on this sheet is based upon field inspection and is not to be construed to imply mechanical analysis.

FIELD STUDY	by O. Mikes	10-6-66
DRAWN	by B. Allen	10-13-66
CHECKED	by R. CORBALEY	10-14-66

Approval Recommended by [signature] Engineering Geologist

BRIDGE DEPARTMENT
ENGINEERING GEOLOGY SECTION

475

STATE OF CALIFORNIA
DEPARTMENT OF TRANSPORTATION

EL CAMINO REAL UNDERCROSSING (WIDENING)

LOG OF TEST BORINGS

SCALE AS NOTED | BRIDGE 55-203 | FILE | DRAWING 55203-16

Chg. 07209
WA. 105211

Disregard prints bearing earlier numbers → PREL. DRAWING No. PR-

I HEREBY CERTIFY THAT THIS IS A TRUE AND ACCURATE COPY OF THE ABOVE DOCUMENT TAKEN UNDER MY DIRECTION AND CONTROL ON THIS DATE IN SACRAMENTO, CALIFORNIA PURSUANT TO AUTHORIZATION BY THE DIRECTOR OF TRANSPORTATION.

DATE 11/18/83 SIGNATURE [signature] TITLE

FILENAME= c0G94re007.tif

I-136(18) I-0606(5)

FED ROAD DIV NO	STATE	PROJ NO	FISCAL YEAR	SHEET NO	TOTAL SHEETS
7	CAL.			120	183

DIST	COUNTY	ROUTE	POST MILES TOTAL PROJECT	SHEET No	TOTAL SHEETS
12	Ora	5	1.3/1.7	70	127

To accompany plans dated 3-23-09

Dist	County	Route	Section	Sheet No	Total Sheets
VII	Ora	5	SCIe	10	13

BRIDGE ENGINEER

DATE APPROVED

BRIDGE DEPARTMENT

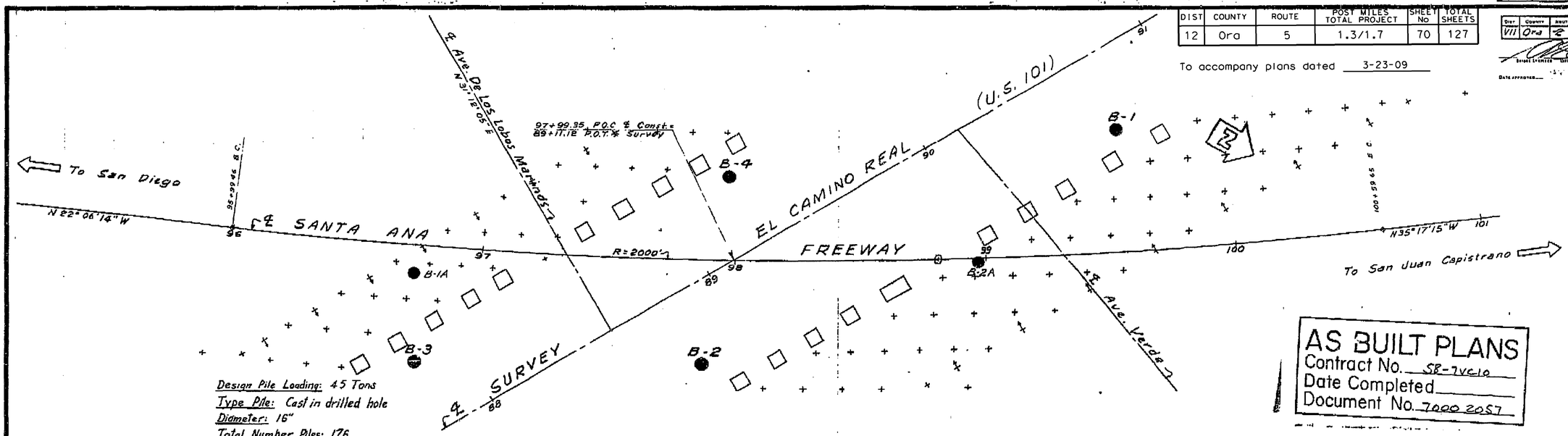

AS BUILT PLANS
Contract No. 58-7VC10
Date Completed
Document No. 7000 2057

Note: Borings number B-1A & B-2A present a more accurate picture of the material at the site than do Borings B-1, 2, 3 & 4.

AS BUILT
℄ 58-7VC10-FI
ENGR. J. L. Burns
Sept. 17, 1958

B.M #10 - SCIe - 54
L. & T. in P.C.C. Curb E side 101 Hwy. 105' N of Inter. Ave. Verde & 101 Hwy.
Elev. 213.36 Destroyed

B.M #11 - SCIe - 54
L & T in P.C.C. Curb S. side Ave Santiago, 118' E. Hwy 101.
Elev. 204.82

FIELD STUDY
DRAWN: V. Mackey 10-31-54
CHECKED: A. Fenske 11-01-54
Approved: [illegible]

CLASSIFICATION OF MATERIAL BASED ON STANDARD GRADE SIZE LIMITS

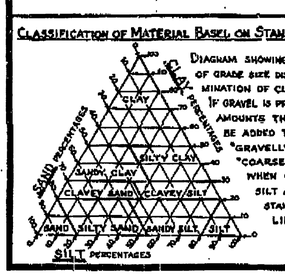

DIAGRAM SHOWING THE BASIS FOR ESTIMATES OF GRADE SIZE DISTRIBUTION USED IN DETERMINATION OF CLASS NAMES.

IF GRAVEL IS PRESENT IN APPRECIABLE AMOUNTS THE TERM "GRAVELLY" MAY BE ADDED TO THE CLASS NAME, VIZ. "GRAVELLY SAND." THE TERMS "COARSE," "MEDIUM" AND "FINE" WHEN USED TO DESCRIBE SAND, SILT AND GRAVEL REFER TO STANDARD GRADE SIZE LIMITS.

LEGEND OF EARTH MATERIALS

- Gravel
- Sand
- Silt
- Clay
- Sandy Clay or Clayey Sand
- Sandy Silt or Silty Sand
- Silty Clay or Clayey Silt
- Peat and/or Organic Matter
- Fill Material
- Igneous Rock
- Sedimentary Rock
- Metamorphic Rock

LEGEND OF BORING OPERATIONS

- Plan of any boring
- Penetrometer
- 2½" Cone Penetrometer
- Sampler boring (DRY)
- ROTARY boring (WET)
- AUGER boring (DRY)
- JET boring
- CORE boring
- TEST PIT

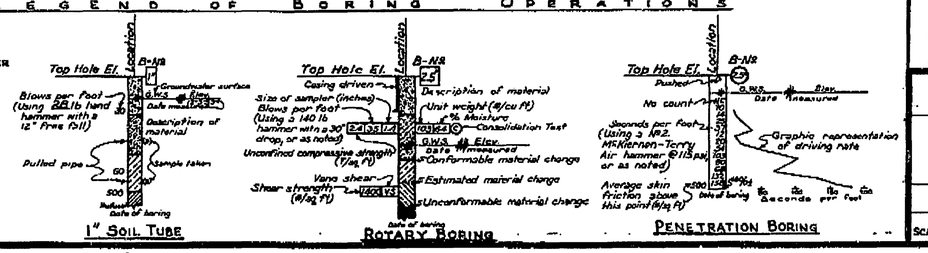

NOTES

The contractor's attention is directed to Section 2, Article (c) of the Standard Specifications and to the Special Provisions accompanying this set of plans.

Classification of earth material as shown on this sheet is based upon field inspection and is not to be construed to imply mechanical analysis.

STATE OF CALIFORNIA
DEPARTMENT OF PUBLIC WORKS
DIVISION OF HIGHWAYS

EL CAMINO REAL U.C.

LOG OF TEST BORINGS

SCALE Horiz. 1"=20' Vert. 1"=10' | BRIDGE 55-203 | FILE E-55 | DRAWING C-3719-10

3719 # 28

I HEREBY CERTIFY THAT THIS IS A TRUE AND ACCURATE COPY OF THE ABOVE DOCUMENT TAKEN UNDER MY DIRECTION AND CONTROL ON THIS DATE IN SACRAMENTO, CALIFORNIA PURSUANT TO AUTHORIZATION BY THE DIRECTOR OF PUBLIC WORKS.

DATE 4/21/10 SIGNATURE [signature] TITLE REC

120

FILENAME= c0G94re008.tif

MICROFILM - STATE OF CALIFORNIA - DEPARTMENT OF PUBLIC WORKS - MICROFILM

ClibPDF - www.fastio.com

DIST	COUNTY	ROUTE	POST MILES TOTAL PROJECT	SHEET No	TOTAL SHEETS
12	Ora	5	1.3/1.7	71	127

DIST.	COUNTY	ROUTE	POST MILES—TOTAL PROJECT	BRIDGE NO.	TOTAL SHEETS
07	Ora	5	0.0/6.1	343	538
	SD	5	R72.1/R72.4		

To accompany plans dated 3-23-09

Robert L. Reynolds #165
BRIDGE ENGINEERING GEOLOGIST — CERT. ENGINEERING GEOLOGIST NO.
DATE APPROVED March 12, 1979

BENCH MARKS

BM #415 Elev. 163.35
BM #416 Elev. 171.72
BM #417 Elev. 186.50
B.S.I #418 Elev. 200.92

All the above BMs are "P.K. nail at center of painted target on S Bnd. Fwy. Shoulder," as per District 07 Survey Request 78-061, page 12, dated May 1978.

B-3 3" RETAINING WALL NO. 77 L AND SOUND WALL NO.15 B-1 3" L.O.L.

B-2

℄ ROUTE 5

4 75 6 7 8 9 80 1 2 3 4 85 6 7

[redacted]

NO GROUND WATER ENCOUNTERED DURING THIS INVESTIGATION BY OFFICE OF STRUCTURES GEOLOGIC STUDIES SECTION
DATE 1-21-78

AS BUILT
CORRECTIONS BY W. LOHSE
CONTRACT NO. 07-105274
DATE 4-1-83 10-28-83 ASC
NO CORRECTIONS THIS SHEET

PLAN
SCALE 1"= 50'
PROFILE
HORIZ. SCALE 1"= 50'
VERT. SCALE 1"= 10'

65'Lt. Sta. 86+00 ℄ Route 5
202.3
B-2
7-20-78 100 200

200 190 180 170 160 150 140 130 120

Approx. future ground line along L.&L. Retaining Wall No. 77L and Sound Wall No. 15

106'Lt. Sta. 77+00 ℄ Route 5

B-3 3"
148.5
Compact, gray, CLAYEY SILTY SAND.
Compact, cohesive SILTSTONE.
Dense, mottled gray, rusty brown, cohesive SILTSTONE; dry.
Dense, gray-black, low to medium plastic CLAYSTONE, rare GYPSUM crystals, occasionally CALCAREOUS; dry.
7-21-78

106'Lt. Sta. 87+80 ℄ Route 5

B-1 3"
162.1
Dense, brown, SANDY GRAVEL and GRAVELLY SAND; dry.
Dense, brown, CLAYEY SAND and CLAYEY GRAVEL; moist.
Very stiff, mottled gray and brown, medium plastic CLAY, SANDY in part; moist.
Hard, gray-black, CLAYSTONE, breaks down into lean CLAY; dry.
7-20-78

LEGEND OF BORING OPERATIONS

PENETRATION BORING — Boring data: Top Hole El., Date, Drilling rig, Hammer data, Hammer fall, Blows per foot, Graphic representation of driving rate, Test pit
ROTARY BORING — Boring data: Top Hole El., Casing driven, Size of sample (in), Blows per foot, Hammer weight & fall, Sample taken, Natural moisture, Liquid limit, Plastic limit, Unconfined compressive strength (T/sq ft), Shear strength, Visual classification, Description of material, Dry density (pcf), % moisture, Consolidation test, Expansion test, Elev., Date drilled, Core recovery, Rock quality designation (RQD), Unconfined material change, Consolidated material change, Laminated material change, Uniform/mixed material change, Boring data
JET BORING; CORE BORING; ROTARY BORING (WET); AUGER BORING (DRY); 2½" CONE PENETROMETER; SAMPLER BORING (DRY); 2½" SOIL TUBE

LEGEND OF EARTH MATERIALS

GRAVEL; SAND; SILT; CLAY; SANDY CLAY or CLAYEY SAND; SANDY SILT or SILTY SAND
SILTY CLAY or CLAYEY SILT; SILTY SAND or CLAYEY SAND; ORGANIC MATTER
FILL MATERIAL
IGNEOUS ROCK; SEDIMENTARY ROCK; METAMORPHIC ROCK

NOTE: Classification of earth material as shown on this sheet is based upon field inspection and is not to be construed to imply petrographic analysis.

CONSISTENCY CLASSIFICATION FOR SOILS

According to the Standard Penetration Test

Penetration Index (Blows/Ft)	Granular	Cohesive
0-5	Very loose	Very soft
5-10	Loose	Soft
10-20	Slightly compact	Stiff
20-35	Compact	Very stiff
35-70	Dense	Hard
70	Very dense	Very hard

UNIFIED SOIL CLASSIFICATION SYSTEM

ENGINEERING GEOLOGY SECTION
FIELD STUDY By L.E. Rand 7-21-78
DRAWN By D.B. Crawford 9-18-78
CHECKED By L.E. RAND 7-25-78
Approved & recommended By [signature] ENGINEERING GEOLOGIST
CERTIFIED ENGINEERING GEOLOGIST NUMBER 40

State of CALIFORNIA
DEPARTMENT OF TRANSPORTATION

OFFICE OF STRUCTURES
DESIGN GROUP 8
PROJECT ENGINEER [signature] 9604
POST MILE

SOUND WALL NO.15 & RET. WALL NO. 77-L

LOG OF TEST BORINGS

343

ORIGINAL SCALE IN INCHES FOR REDUCED PLANS 0 1 2 3

CU 07209
WO 105271

Disregard prints bearing earlier revision dates →

REVISION DATES (PRELIMINARY STAGE ONLY) 7/14/78

SHEET 8 OF 8

I HEREBY CERTIFY THAT THIS IS A TRUE AND ACCURATE COPY OF THE ABOVE DOCUMENT TAKEN UNDER MY DIRECTION AND CONTROL ON THIS DATE IN SACRAMENTO, CALIFORNIA PURSUANT TO AUTHORIZATION BY THE DIRECTOR OF TRANSPORTATION.
DATE 7/18/83 SIGNATURE [signature] TITLE SUPERVISOR OF MICROFILM SERVICES

FILENAME= c0094re009.tif

Dist	COUNTY	ROUTE	POST MILES TOTAL PROJECT	SHEET No.	TOTAL SHEETS
12	Ora	5	1.3/1.7	72	127

REGISTERED CIVIL ENGINEER — 01-22-09 DATE

3-23-09
PLANS APPROVAL DATE

REGISTERED PROFESSIONAL ENGINEER — HON WAI YOW — No. C43276 — Exp. 3/31/10 — CIVIL — STATE OF CALIFORNIA

THE STATE OF CALIFORNIA OR ITS OFFICERS OR AGENTS SHALL NOT BE RESPONSIBLE FOR THE ACCURACY OR COMPLETENESS OF ELECTRONIC COPIES OF THIS PLAN SHEET.

ORANGE COUNTY TRANSPORTATION AUTHORITY
550 SOUTH MAIN STREET
ORANGE, CA 92863

ACT CONSULTING ENGINEERS, INC.
5 CORPORATE PARK, STE 260
IRVINE, CA 92606

PROJECT NOTES: (FOR RAMP METERING)

1. EXISTING RAMP METERING SYSTEM AND THE ASSOCIATED FREEWAY COMMUNICATION SYSTEMS SHALL REMAIN OPERATIONAL DURING CONSTRUCTION AT ALL TIMES, EXCEPT WHEN SHUT DOWN IS PERMITTED BY THE ENGINEER.

2 EXISTING 120/240 V METERED TYPE III-BF SERVICE EQUIPMENT ENCLOSURE WITH 100 A (MAIN CB), 30 A FOR CONTROLLER CABINET, AND OTHER CBs TO REMAIN.
ID No. 12-55-005-0-008.991
SERVICE ADDRESS: 119 AVENIDA DEL PRESIDENTE.

3 EXISTING MODEL 170 CONTROLLER ASSEMBLY (INCLUDING FIBER OPTIC DATA MODEM) IN MODEL 334 CABINET TO REMAIN.

4 INSTALL TYPE 27-4-100 STANDARD, WITH TWO VEHICLE SIGNAL FACES (3 SECTION, PV) AND SIGNS, ON NEW FOUNDATION. MODIFY SIDE PIPE TENONS TO PLACE HEADS CENTERED OVER EACH LANE.

5 RL EXISTING RAMP METER SIGNAL.

6. FOR LOOP CONFIGURATION, SEE SHEET E-3.

Exist CONDUIT AND CONDUCTOR SCHEDULE

AWG	CONDUCTOR RUN	1	2	3	4	5	6(*)	7	8	9	10	11
#14	RAMP SIGNAL	—	—	6(N)	—	—	—	—	—	—	—	6(N)
	METER ON	—	—	—	—	2(E)	—	2(E)	—	—	—	2(E)
	SPARES	—	—	3(N)	—	—	—	—	—	—	—	3(N)
#12	LOOP WIRE PAIR	—	—	—	—	—	—	—	2(E)	—	—	—
#10	NEUTRAL	—	—	1	—	—	—	—	—	—	—	1
#6	CONTROLLER SERVICE	—	—	—	2(E)	—	—	—	—	—	—	2(E)
DLC	DEMAND DETECTOR	—	1(N)	2(N)	—	—	—	—	—	—	—	2(N)
	PASSAGE DETECTOR	—	1(N)	2(N)	—	—	—	—	—	—	—	2(N)
	QUEUE DETECTOR	—	—	—	—	2(N)	—	—	—	—	—	2(N)
	SURVEILLANCE DETECTOR	—	—	4(N)	—	—	—	—	—	4(N)	—	4(N)
	COUNT DETECTOR	1(N)	—	1(N)	—	1(R)	—	—	—	—	1(R)	1(R)1(N)
4#18	TELEPHONE	—	—	—	—	—	*	—	—	—	—	—
CONDUIT SIZE		(N) 1½"	(N) 2"	(N) 3"	(E) 1½"	(E) 2"	AB 1½"	(E) 2"	(E) 2"	(N) 2"	(N) 2"	(E) 2-3"

(E) EXISTING, (N) NEW, (R) REUSE Exist 1 dlc

(*) RC ALL PULL BOXES AND TELEPHONE CABLE IN CONDUIT RUN No. 6

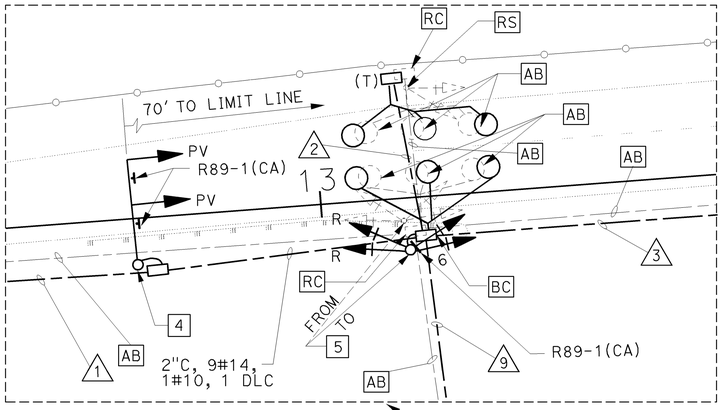

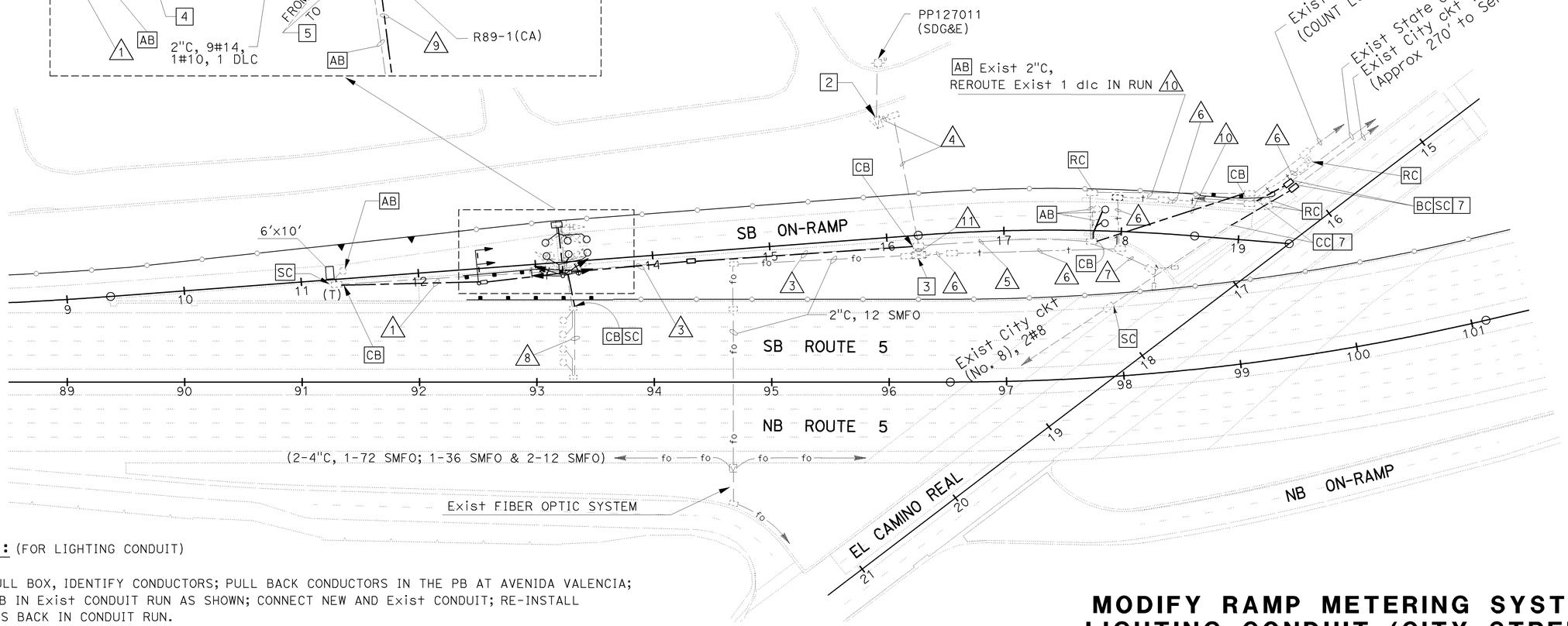

PROJECT NOTES: (FOR LIGHTING CONDUIT)

7 LOCATE PULL BOX, IDENTIFY CONDUCTORS; PULL BACK CONDUCTORS IN THE PB AT AVENIDA VALENCIA; INSTALL PB IN Exist CONDUIT RUN AS SHOWN; CONNECT NEW AND Exist CONDUIT; RE-INSTALL CONDUCTORS BACK IN CONDUIT RUN.

8. FOR WIRING DIAGRAMS, SEE SHEET E-3.

MODIFY RAMP METERING SYSTEM LIGHTING CONDUIT (CITY STREET)

SCALE: 1"=50'

THIS PLAN IS ACCURATE FOR ELECTRICAL WORK ONLY.

E-1

REVISED BY | DATE REVISED
J SHIAO | S YEH
CALCULATED-DESIGNED BY | CHECKED BY
CONSULTANT FUNCTIONAL SUPERVISOR: JAMAL SALMAN
STATE OF CALIFORNIA - DEPARTMENT OF TRANSPORTATION
DESIGN F
Caltrans

LAST REVISION DATE PLOTTED => 30-MAR-2009
01-22-09 TIME PLOTTED => 13:21

BORDER LAST REVISED 4/11/2008 | RELATIVE BORDER SCALE IS IN INCHES 0 1 2 3 | USERNAME => trmikesl | DGN FILE => c0g940ua001.dgn | CU 12231 | EA 0G9401

Dist	COUNTY	ROUTE	POST MILES TOTAL PROJECT	SHEET No.	TOTAL SHEETS
12	Ora	5	1.3/1.7	73	127

Honwai Yow 01-22-09
REGISTERED CIVIL ENGINEER DATE

HON WAI YOW No. C43276 Exp. 3/31/10 CIVIL — REGISTERED PROFESSIONAL ENGINEER — STATE OF CALIFORNIA

3-23-09
PLANS APPROVAL DATE

THE STATE OF CALIFORNIA OR ITS OFFICERS OR AGENTS SHALL NOT BE RESPONSIBLE FOR THE ACCURACY OR COMPLETENESS OF ELECTRONIC COPIES OF THIS PLAN SHEET.

ORANGE COUNTY TRANSPORTATION AUTHORITY
550 SOUTH MAIN STREET
ORANGE, CA 92863

ACT CONSULTING ENGINEERS, INC.
5 CORPORATE PARK, STE 260
IRVINE, CA 92606

PROJECT NOTES: (THIS SHEET ONLY)

1 LOCATE EXISTING PULL BOXES, IDENTIFY CONDUCTORS (STATE ckt No. 7 - 2#4; AND ckt "F" - 2#6), PULL BACK CONDUCTORS IN PULL BOX SHOWN ON PLAN (SPLICE THE CONDUCTORS AS PERMITTED BY THE ENGINEER). INSTALL CONDUIT INTO EXISTING PULL BOX, RE-INSTALL CONDUCTORS BACK IN CONDUIT RUN.

2 FOR WIRING DIAGRAMS (ckt No. 7 & ckt "F"), SEE SHEET E-3

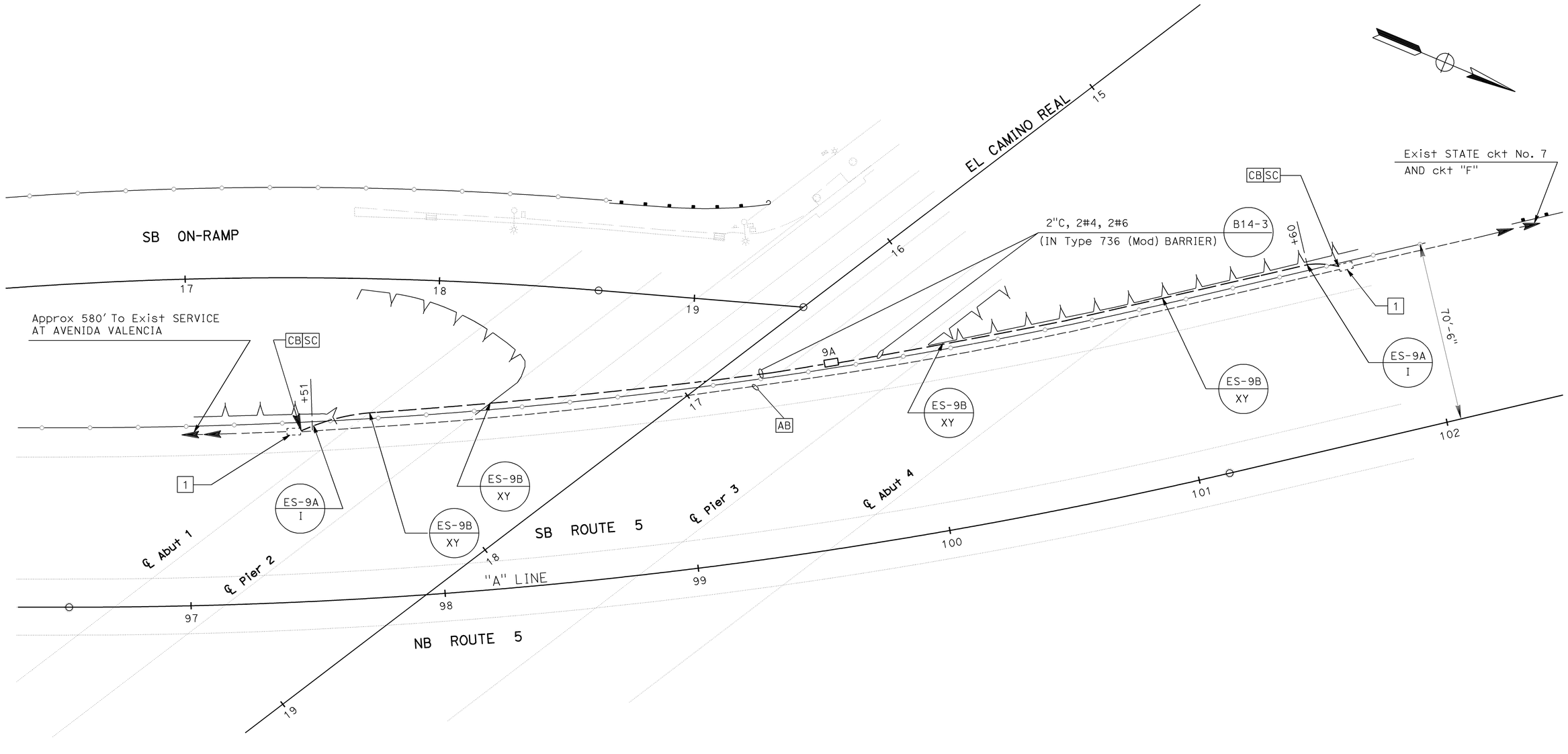

LIGHTING CONDUIT (BRIDGE)

SCALE: 1"=20'

THIS PLAN IS ACCURATE FOR ELECTRICAL WORK ONLY.

E-2

STATE OF CALIFORNIA - DEPARTMENT OF TRANSPORTATION
DESIGN F
CONSULTANT FUNCTIONAL SUPERVISOR: JAMAL SALMAN
CALCULATED-DESIGNED BY: J SHIAO
CHECKED BY: S YEH
REVISED BY | DATE REVISED

LAST REVISION | DATE PLOTTED => 30-MAR-2009
01-22-09 | TIME PLOTTED => 13:21

BORDER LAST REVISED 4/11/2008
RELATIVE BORDER SCALE IS IN INCHES 0 1 2 3
USERNAME => trmikesl
DGN FILE => c0g940ua002.dgn
CU 12231
EA 0G9401

Dist	COUNTY	ROUTE	POST MILES TOTAL PROJECT	SHEET No.	TOTAL SHEETS
12	Ora	5	1.3/1.7	74	127

REGISTERED CIVIL ENGINEER — 01-22-09 DATE

HON WAI YOW No. C43276 Exp. 3/31/10 CIVIL — REGISTERED PROFESSIONAL ENGINEER — STATE OF CALIFORNIA

3-23-09
PLANS APPROVAL DATE

THE STATE OF CALIFORNIA OR ITS OFFICERS OR AGENTS SHALL NOT BE RESPONSIBLE FOR THE ACCURACY OR COMPLETENESS OF ELECTRONIC COPIES OF THIS PLAN SHEET.

ORANGE COUNTY TRANSPORTATION AUTHORITY
550 SOUTH MAIN STREET
ORANGE, CA 92863

ACT CONSULTING ENGINEERS, INC.
5 CORPORATE PARK, STE 260
IRVINE, CA 92606

LEGEND: (FOR WIRING DIAGRAMS)

- SPLICE
- REUSE CONDUCTOR
- EXISTING 310 W HPS LAMP
- EXISTING mv SIGN ILLUMINATION LAMP
- EXISTING CONDUCTORS
- RC CONDUIT

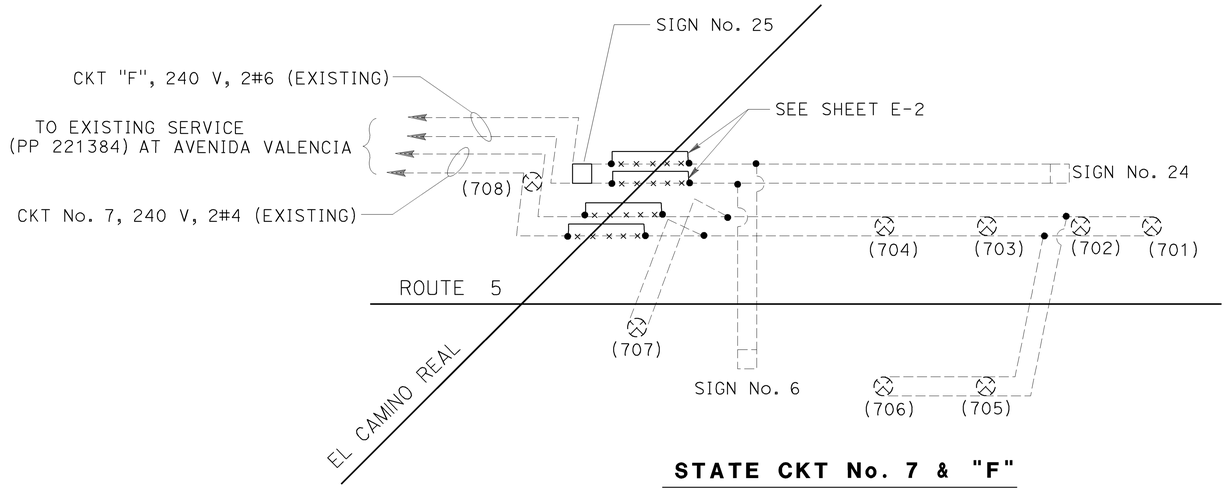

STATE CKT No. 7 & "F"

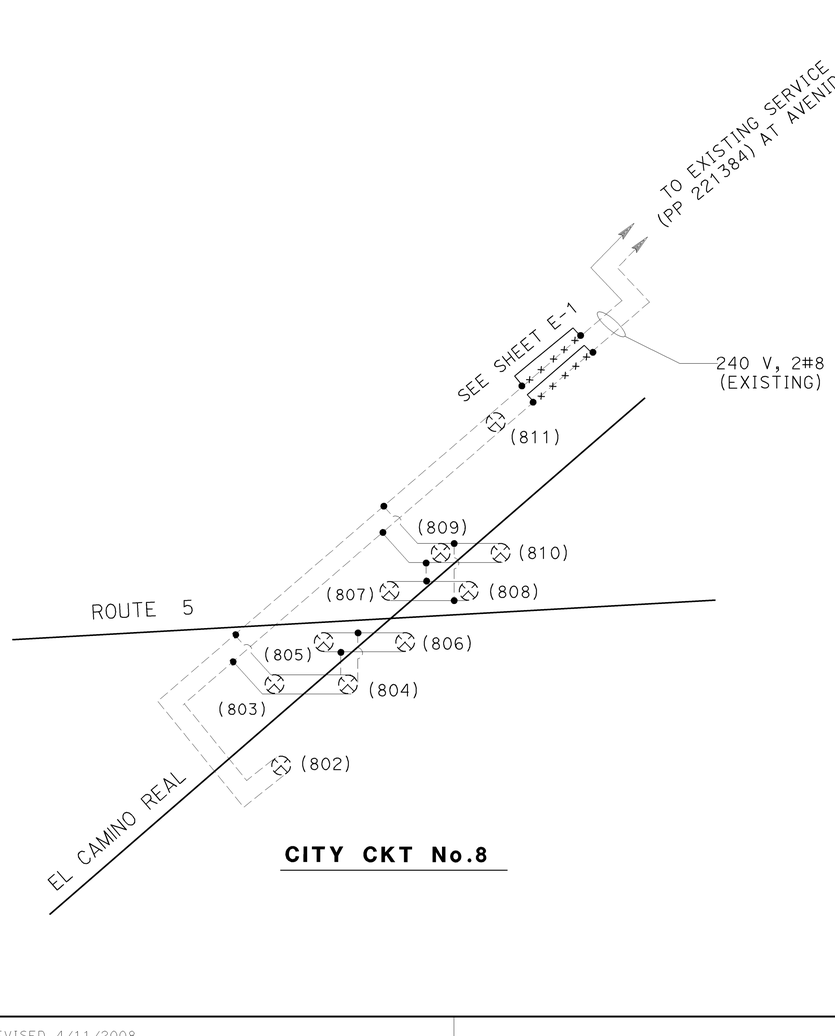

CITY CKT No.8

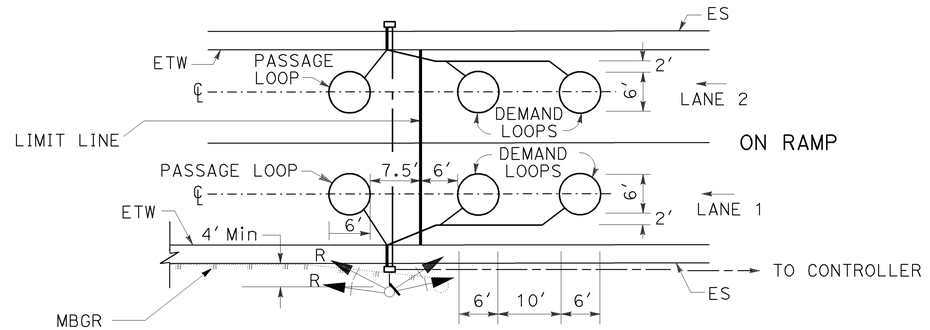

RAMP METER LOOP INSTALLATION DETAIL

NOTES:

1. THE CONTRACTOR SHALL VERIFY ALL CONTROLLED FIELD DIMENSIONS BEFORE ORDERING OR FABRICATING MATERIAL.
2. FOR LOOP DETECTOR INSTALLATION PROCEDURE, SEE Std PLAN RSP ES-5A, ES-5B AND ES-5D.

MODIFY RAMP METERING SYSTEM
LIGHTING CONDUIT (CITY STREET)
LIGHTING CONDUIT (BRIDGE)
(DETECTORS AND WIRING DIAGRAMS)

NO SCALE

E-3

THIS PLAN IS ACCURATE FOR ELECTRICAL WORK ONLY.

REVISED BY	DATE REVISED

CALCULATED-DESIGNED BY: J SHIAO
CHECKED BY: S YEH

CONSULTANT FUNCTIONAL SUPERVISOR: JAMAL SALMAN

STATE OF CALIFORNIA - DEPARTMENT OF TRANSPORTATION
Caltrans
DESIGN F

LAST REVISION DATE PLOTTED => 30-MAR-2009
01-22-09 TIME PLOTTED => 13:21

BORDER LAST REVISED 4/11/2008

RELATIVE BORDER SCALE IS IN INCHES 0 1 2 3

USERNAME => trmikesl
DGN FILE => c0g940ua003.dgn

CU 12231

EA 0G9401

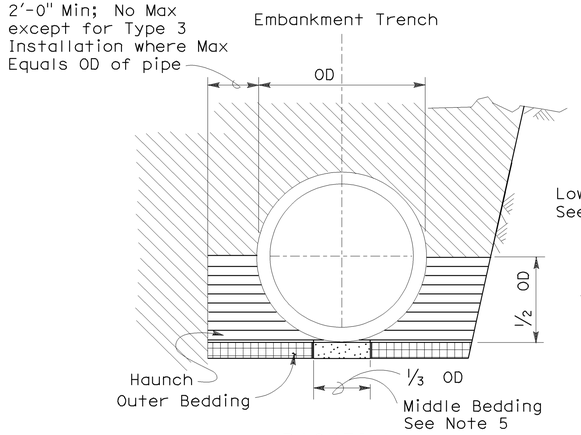

BACKFILL

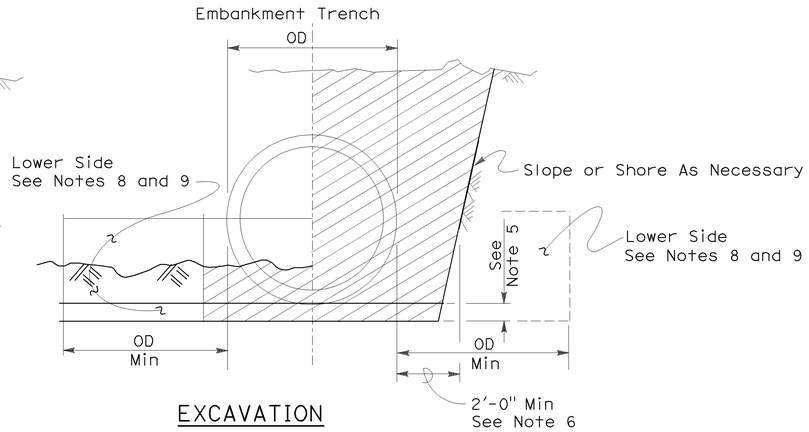

EXCAVATION

Roadway Embankment

Structure Backfill (Culvert) See Note 6

Structure Backfill (Culvert) See Note 6

Loose Backfill

Excavation Structure (Culvert)

TYPE 1 INSTALLATION:

The haunch and outer bedding shall be compacted to a minimum 90 percent relative compaction. In addition, the minimum sand equivalent in these areas shall be 30 and the maximum percentage passing the 75 μm sieve size shall be 12.

TYPE 2 INSTALLATION:

The haunch and outer bedding shall be compacted to a minimum 90 percent relative compaction. In addition, the minimum sand equivalent in these areas shall be 25.

TYPE 3 INSTALLATION:

The haunch and outer bedding shall be compacted to a minimum 85 percent relative compaction. 90 percent relative compaction will be required where the fill over the pipe is less than 4′-0" or 1/2 OD.

INSTALLATION TYPE 1

MINIMUM CLASS AND D-LOAD	COVER	
	108" Dia AND SMALLER	OVER 108" Dia
Class II 1000D	14.9′	12.9′
Class III 1350D	15.0′ - 20.9′	13.0′ - 18.9′
Class III Special 1700D	21.0′ - 26.9′	19.0′ - 24.9′
Class IV 2000D	27.0′ - 31.9′	25.0′ - 29.9′
Class IV Special 2500D	32.0′ - 40.9′	30.0′ - 38.9′
Class V 3000D	41.0′ - 49.9′	39.0′ - 46.9′
Class V Special 3600D	50.0′ - 59.0′	47.0′ - 58.0′

INSTALLATION TYPE 2

MINIMUM CLASS AND D-LOAD	COVER
Class II 1000D	9.9′
Class III 1350D	10.0′- 14.9′
Class III Special 1700D	15.0′ - 19.9′
Class IV 2000D	20.0′ - 24.9′
Class IV Special 2500D	25.0′ - 31.9′
Class V 3000D	32.0′ - 38.9′
Class V Special 3600D	39.0′ - 47.0′

INSTALLATION TYPE 3

MINIMUM CLASS AND D-LOAD	COVER	
	48" Dia AND SMALLER	OVER 48" Dia
Class II 1000D	7.9′	5.9′
Class III 1350D	8.0′ - 10.9′	6.0′ - 8.9′
Class III Special 1700D	11.0′ - 14.9′	9.0′ - 12.9′
Class IV 2000D	15.0′ - 17.9′	13.0′ - 15.9′
Class IV Special 2500D	18.0′ - 21.9′	16.0′ - 19.9′
Class V 3000D	22.0′ - 26.9′	20.0′ - 24.9′
Class V Special 3600D	30.0′ - 33.0′	25.0′ - 31.0′

DIST	COUNTY	ROUTE	POST MILES TOTAL PROJECT	SHEET NO.	TOTAL SHEETS
12	Ora	5	1.3/1.7	75	127

Dallas J. Forester
REGISTERED CIVIL ENGINEER

November 17, 2006
PLANS APPROVAL DATE

REGISTERED PROFESSIONAL ENGINEER
Dallas Forester
No. C37765
Exp.12-31-06
CIVIL
STATE OF CALIFORNIA

The State of California or its officers or agents shall not be responsible for the accuracy or completeness of electronic copies of this plan sheet.

To accompany plans dated 3-23-09

NOTES:

1. Unless otherwise shown on the plans or specified in the special provision, the Contractor shall have the option of selecting the class of RCP and the type of installation to be used, provided the height of cover does not exceed the value shown for the RCP selected.
   Example: 24" RCP culvert with maximum cover of 19′-0"′ the options are:
   a) Class III or stronger with Installation Type 1.
   b) Class III Special or stronger with Installation Type 2.
   c) Class IV Special or stronger with Installation Type 3.
   Cover is defined as the maximum vertical distance from top of the pipe to finished grade within the length of any given culvert.
2. The class of RCP and Installation Type selected shall be the same throughout the length of any given culvert.
3. The "length of any culvert" is defined as the culvert between:
   a) Successive drainage structure (inlets, junction boxes, headwalls, etc.).
   b) A drainage structure and the inlet or outlet end of the culvert.
   c) The inlet and outlet end of the culvert when there are no intervening drainage structures.
4. Oval and arch shaped RCP shall not be used.
5. 1/25 OD Min, not less than 3".
6. Slurry cement backfill may be substituted for backfill in the outer bedding and haunch areas. If slurry is used the outer and middle beddings shall be omitted. Prior to installation the soil under the middle 1/3 of the outside diameter of the pipe shall be softened by scarifying or other means to a minimum depth of 1/25 OD, but not less than 3". Where slurry cement backfill is used clear distance to trench wall may be reduced as set forth in Section 19-3.062 of the Standard Specifications.
7. Backfill shall be placed full width of excavation except where dimensions are shown for backfill width or thickness. Dimensions shown are minimums.
8. Lower side shall be suitable material as determined by the Engineer. Otherwise it shall be considered unsuitable as set forth in Section 19-2.02 of the Standard Specifications. See Note 9.
9. Where the pipe is placed in a trench, if the trench walls are sloped at 5 vertical to 1 horizontal or steeper for at least 90 percent of the trench height or up to not less than 12" from the grading plane, the firmness of the soil in the lower side need not be considered.
10. Non-reinforced precast concrete pipe sizes 3′-0" or smaller may be placed under installation Types 1, 2 or 3.

STATE OF CALIFORNIA
DEPARTMENT OF TRANSPORTATION

EXCAVATION AND BACKFILL CONCRETE PIPE CULVERTS

NO SCALE

RSP A62DA DATED NOVEMBER 17, 2006 SUPERSEDES STANDARD PLAN A62DA DATED MAY 1, 2006 - PAGE 20 OF THE STANDARD PLANS BOOK DATED MAY 2006.

REVISED STANDARD PLAN RSP A62DA

2006 REVISED STANDARD PLAN RSP A62DA

10-26-06

DIST	COUNTY	ROUTE	POST MILES TOTAL PROJECT	SHEET NO.	TOTAL SHEETS
12	Ora	5	1.3/1.7	76	127

Randell D. Hiatt
REGISTERED CIVIL ENGINEER

June 6, 2008
PLANS APPROVAL DATE

REGISTERED PROFESSIONAL ENGINEER
Randell D. Hiatt
No. C50200
Exp. 6-30-09
CIVIL
STATE OF CALIFORNIA

The State of California or its officers or agents shall not be responsible for the accuracy or completeness of electronic copies of this plan sheet.

To accompany plans dated 3-23-09

NOTES:

1. When necessary to place dike in front of face of guard railing, only Type C dike may be used. For dike details, see Standard Plan A87B.
2. For standard railing post embedment, see Standard Plans A77C3.
3. Guard railing delineation to be used where shown on the Project Plans.
4. When dike or curb is placed under guard railing, the maximum height of the dike or curb shall be 4". Mountable dike should not be used. For dike and curb details, see Revised Standard Plans RSP A87A and Standard Plan A87B.
5. For details of typical distance between the face of rail and hinge point, see Standard Plan A77C3.

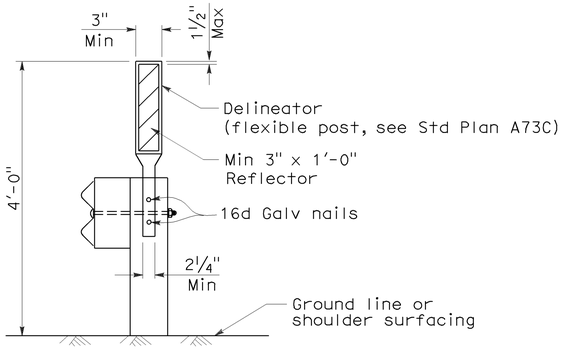

GUARD RAILING DELINEATION
See Note 3

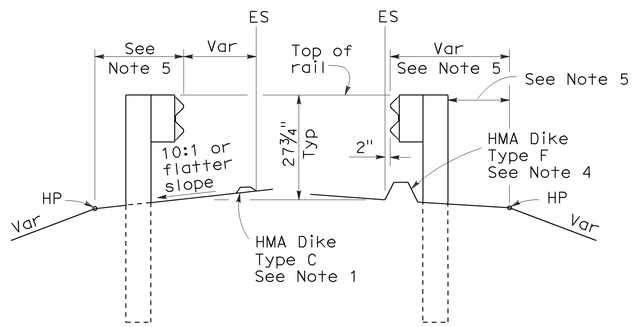

DIKE POSITIONING
See Note 1

STATE OF CALIFORNIA
DEPARTMENT OF TRANSPORTATION

METAL BEAM GUARD RAILING TYPICAL RAILING DELINEATION AND DIKE POSITIONING DETAILS

NO SCALE

RSP A77C4 DATED JUNE 6, 2008 SUPERSEDES STANDARD PLAN A77C4
DATED MAY 1, 2006 - PAGE 47 OF THE STANDARD PLANS BOOK DATED MAY 2006.

REVISED STANDARD PLAN RSP A77C4

2006 REVISED STANDARD PLAN RSP A77C4

12-10-07

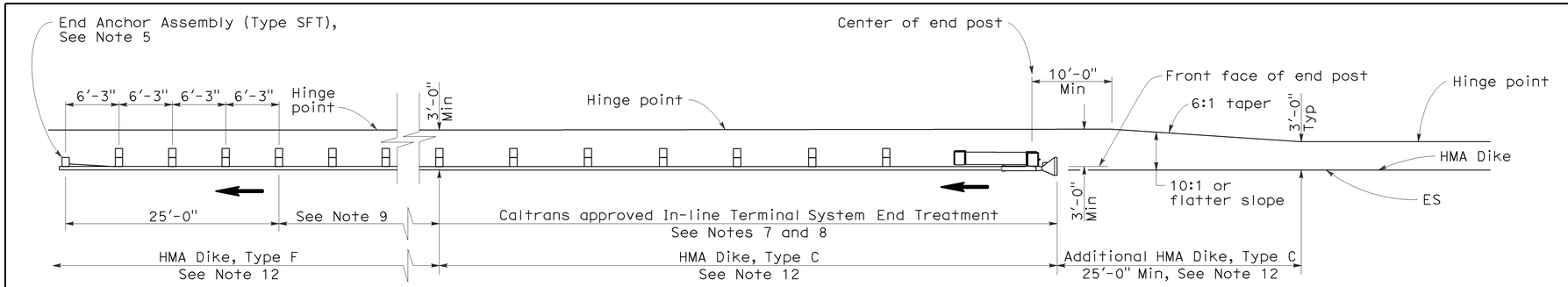

TYPE 11A LAYOUT

(EMBANKMENT GUARD INSTALLATION WITH IN-LINE END TREATMENT AT TRAFFIC APPROACH END OF RAILING)
See Note 6

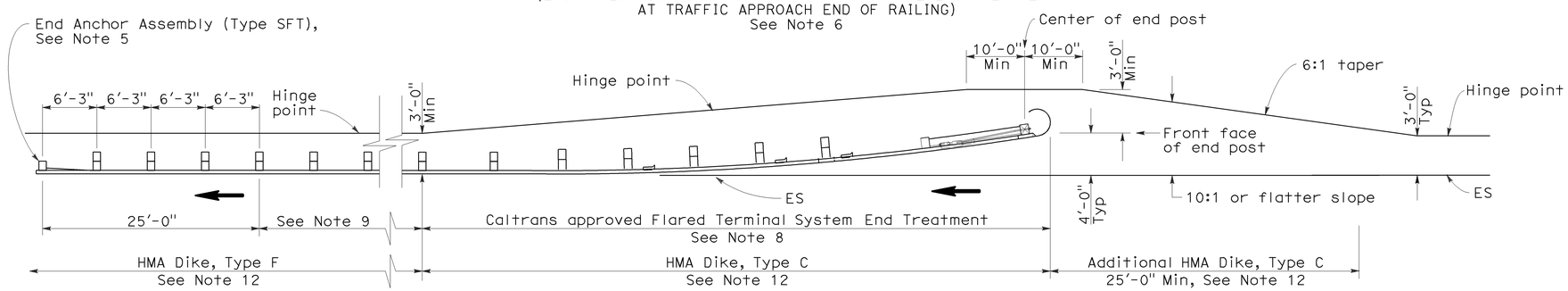

TYPE 11B LAYOUT

(EMBANKMENT GUARD RAILING INSTALLATION WITH FLARED END TREATMENT AT TRAFFIC APPROACH END OF RAILING)
See Note 6

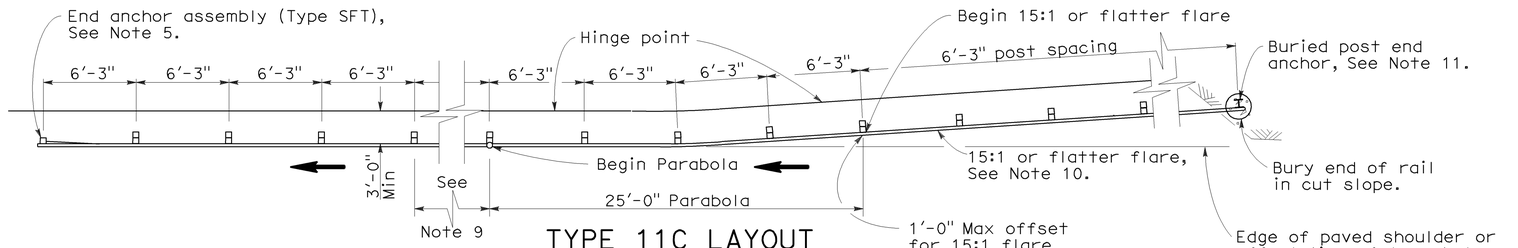

TYPE 11C LAYOUT

(EMBANKMENT GUARD RAILING INSTALLATION WITH BURIED END ANCHOR TREATMENT AT TRAFFIC APPROACH END OF RAILING)
See Notes 6 and 12

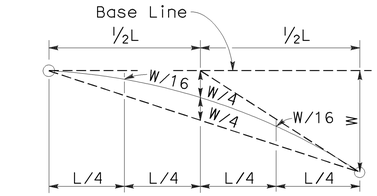

TYPICAL PARABOLIC LAYOUT

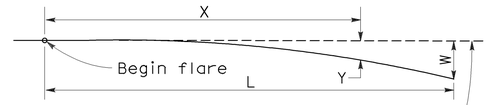

Base Line (Edge of paved shoulder or offset line of edge of traveled way)

$$Y = \frac{WX^2}{L^2}$$

Y = Offset from base line
W = Maximum offset
X = Distance along base line
L = Length of flare

PARABOLIC FLARE OFFSETS

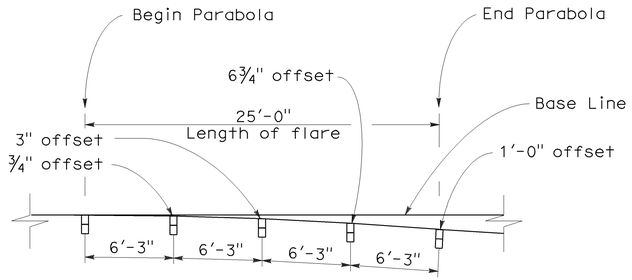

TYPICAL FLARE OFFSETS FOR 1 FOOT MAX END OFFSET

NOTES:

1. Line post, blocks and hardware to be used are shown on Standard Plans A77A1, A77A2, A77B1, A77C1, and A77C2.
2. Guard rail post spacing to be 6'-3" center to center, except as otherwise noted.
3. Except as noted, line posts are 6" x 8" x 6'-0" wood with 6" x 8" x 1'-2" wood blocks. W6 x 9 steel posts, 6'-0" in length, with 6" x 8" x 1'-2" notched wood blocks or recycled plastic blocks may be used for 6" x 8" x 6'-0" wood post with 6" x 8" x 1'-2" wood blocks where applicable and when specified.
4. Direction of adjacent traffic indicated by ➞.
5. For End Anchor Assembly (Type SFT) details, see Standard Plan A77H1.
6. Layout Types 11A, 11B or 11C are typically used where guard railing is recommended to shield embankment slopes and a crashworthy end treatment is required for only one direction of traffic.
7. In-line Terminal System End Treatments are used where site conditions will not accommodate a flared end treatment.
8. The type of terminal system end treatment to be used will be shown on the Project Plans.
9. Dependent on site conditions (embankment height and side slope), construction of additional guard railing (length equal to multiples of 12'-6" with 6'-3" post spacing) may be advisable.
10. The 15:1 or flatter flare used with buried end anchors is based on the edge of the paved shoulder or offset line of edge of the traveled way. The length of guard railing within the 15:1 or flatter flare is based on site conditions and should be a length equal to multiples of 12'-6".
11. For details of the buried post end anchor used with Type 11C Layout, see Standard Plan A77I2.
12. Where placement of dike is required with guard railing installations, see Revised Standard Plan RSP A77C4 for dike positioning details.

DIST	COUNTY	ROUTE	POST MILES TOTAL PROJECT	SHEET NO.	TOTAL SHEETS
12	Ora	5	1.3/1.7	77	127

Randell D. Hiatt
REGISTERED CIVIL ENGINEER

June 6, 2008
PLANS APPROVAL DATE

REGISTERED PROFESSIONAL ENGINEER — Randell D. Hiatt — No. C50200 — Exp. 6-30-09 — CIVIL — STATE OF CALIFORNIA

The State of California or its officers or agents shall not be responsible for the accuracy or completeness of electronic copies of this plan sheet.

To accompany plans dated 3-23-09

STATE OF CALIFORNIA
DEPARTMENT OF TRANSPORTATION

METAL BEAM GUARD RAILING TYPICAL LAYOUTS FOR EMBANKMENTS

NO SCALE

RSP A77E1 DATED JUNE 6, 2008 SUPERSEDES STANDARD PLAN A77E1
DATED MAY 1, 2006 - PAGE 48 OF THE STANDARD PLANS BOOK DATED MAY 2006.

REVISED STANDARD PLAN RSP A77E1

2006 REVISED STANDARD PLAN RSP A77E1

12-10-07

DIST	COUNTY	ROUTE	POST MILES TOTAL PROJECT	SHEET NO.	TOTAL SHEETS
12	Ora	5	1.3/1.7	78	127

Randell D. Hiatt
REGISTERED CIVIL ENGINEER

June 6, 2008
PLANS APPROVAL DATE

REGISTERED PROFESSIONAL ENGINEER — Randell D. Hiatt — No. C50200 — Exp. 6-30-09 — CIVIL — STATE OF CALIFORNIA

The State of California or its officers or agents shall not be responsible for the accuracy or completeness of electronic copies of this plan sheet.

To accompany plans dated 3-23-09

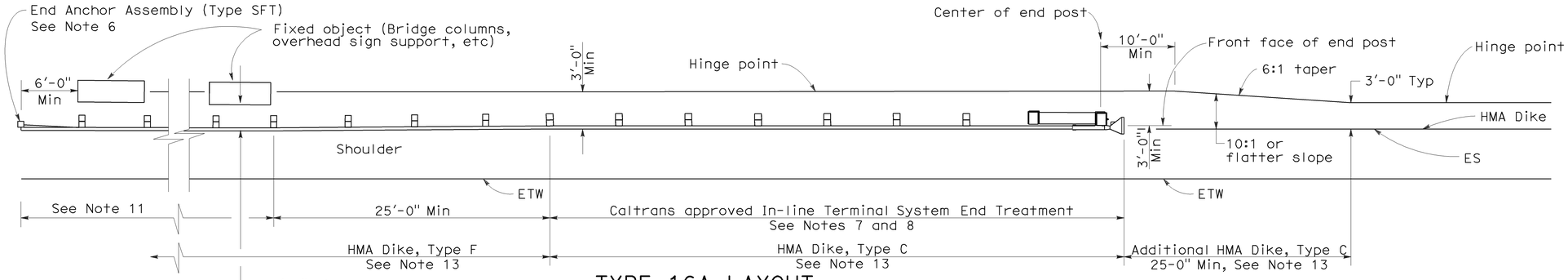

TYPE 16A LAYOUT

(GUARD RAILING INSTALLATION AT ROADSIDE FIXED OBJECT OR OBJECTS WITH AN IN-LINE END TREATMENT AT TRAFFIC APPROACH END OF RAILING)
See Notes 12 and 13

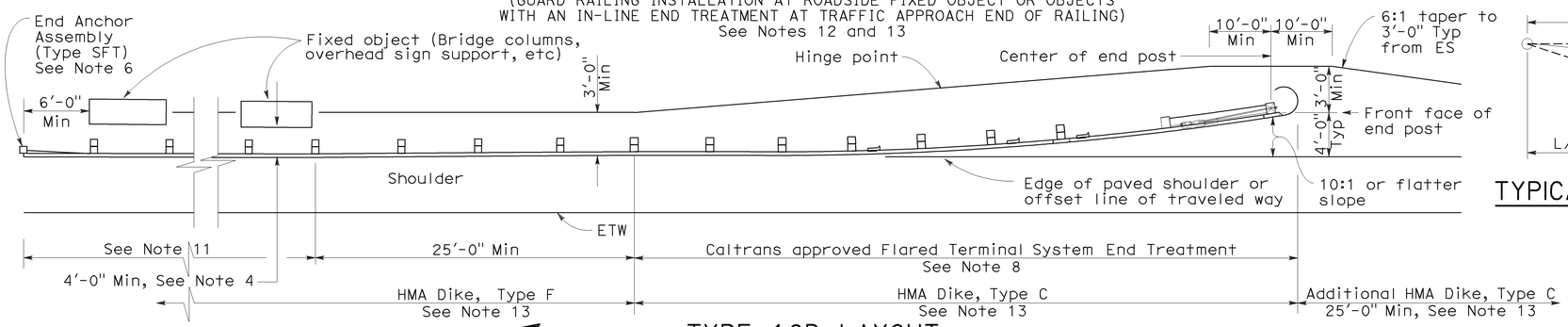

TYPE 16B LAYOUT

(GUARD RAILING INSTALLATION AT ROADSIDE FIXED OBJECT OR OBJECTS WITH A FLARED END TREATMENT AT TRAFFIC APPROACH END OF RAILING)
See Notes 12 and 13

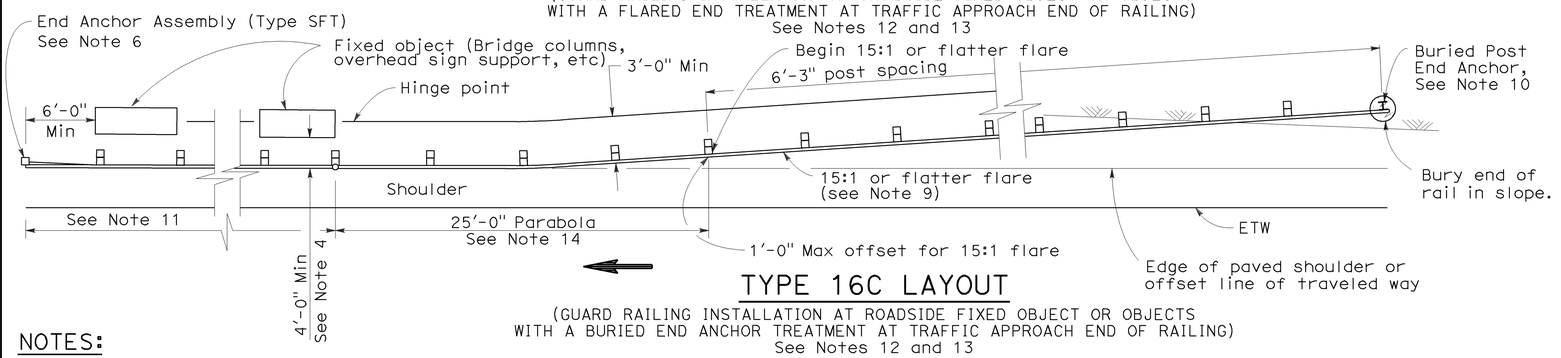

TYPE 16C LAYOUT

(GUARD RAILING INSTALLATION AT ROADSIDE FIXED OBJECT OR OBJECTS WITH A BURIED END ANCHOR TREATMENT AT TRAFFIC APPROACH END OF RAILING)
See Notes 12 and 13

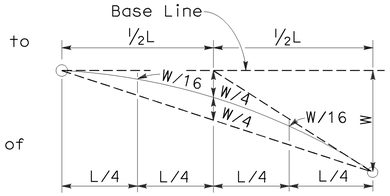

TYPICAL PARABOLIC LAYOUT

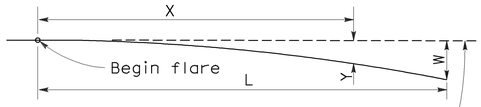

$$Y = \frac{WX^2}{L^2}$$

Y = Offset from base line
W = Maximum offset
X = Distance along base line
L = Length of flare

PARABOLIC FLARE OFFSETS

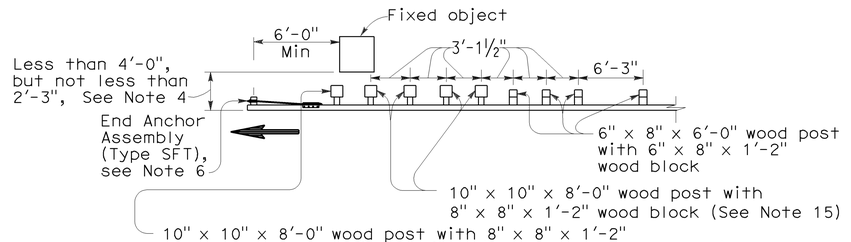

NOTE A: For a series of fixed objects (bridge columns, overhead sign supports, etc.) additional 10" x 10" x 8'-0" wood post with 8" x 8" x 1'-2" wood blocks at 3'-1½" center to center spacing are to be used between fixed objects.

STRENGTHENED RAILING SECTIONS FOR FIXED OBJECT

Use strengthened railing sections with Types 16A, 16B or 16C Layouts where minimum clearance between the face of the guard railing and fixed object(s) is less than 4'-0", but not less than 2'-3". See Note 4

NOTES:

1. Line post, blocks and hardware to be used are shown on Revised Standard Plans A77A1, A77A2, A77B1, A77C1 and A77C2.
2. Guard railing post spacing to be 6'-3" center to center, except as otherwise noted.
3. Except as noted, line posts are 6" x 8" x 6'-0" wood with 6" x 8" x 1'-2" wood blocks. W6 x 9 steel posts, 6'-0" in length, with 6" x 8" x 1'-2" notched wood blocks or notched recycled plastic blocks may be used for 6" x 8" x 6'-0" wood line posts with 6" x 8" x 1'-2" wood blocks where applicable and when specified.
4. A 4'-0" minimum clearance is required between the face of the railing and the face of a fixed object located directly behind standard guard railing sections with post spacing of 6'-3". Construct guard railing as shown in the detail "Strengthened Railing Sections for Fixed Objects" on this plan, where the clearance between the face of the railing and the face of a fixed object is less than 4'-0", but not less than 2'-3". Where the clearance is less than 2'-3", a concrete wall or barrier should be constructed to shield the fixed object(s).
5. Direction of adjacent traffic indicated by ➞.
6. For End Anchor Assembly (Type SFT) details, see Standard Plan A77H1.
7. In-line Terminal System End Treatments are used where site conditions will not accommodate a flared end treatment.
8. The type of terminal system to be used will be shown on the Project Plans.
9. The 15:1 or flatter flare used with Type 16C Layout is based on the edge of the paved shoulder or offset line of edge of the traveled way. The length of guard railing within the 15:1 or flatter flare is based on site conditions and should be a length equal to multiples of 12'-6".
10. For details of the Buried Post End Anchor used with Type 16C Layout, see Standard Plan A77I2.
11. As site conditions dictate, construct additional guard railing to shield fixed object(s). Additional guard railing length equal to multiples of 12'-6". Post spacing at 6'-3" except as specified in Note 4.
12. Layout Types 16A, 16B or 16C are typically used where guard railing is recommended to shield roadside fixed object(s) and a crashworthy end treatment is required for only one direction of traffic.
13. Where placement of dike is required with guard railing, see Revised Standard Plan RSP A77C4 for dike positioning details.
14. For typical flare offsets for 25'-0" length parabola with maximum offset of 1'-0", see Revised Standard Plan RSP A77E1.
15. W6 x 15 steel post, 8'-0" in length, with 8" x 8" x 1'-2" notched wood block or notched recycled plastic blocks may be used in place of the 10" x 10" x 8'-0" wood post with 8" x 8" x 1'-2" wood block shown in the "Strengthened Railing Sections Detail".

STATE OF CALIFORNIA
DEPARTMENT OF TRANSPORTATION

METAL BEAM GUARD RAILING TYPICAL LAYOUTS FOR ROADSIDE FIXED OBJECTS

NO SCALE

RSP A77G3 DATED JUNE 6, 2008 SUPERSEDES STANDARD PLAN A77G3 DATED MAY 1, 2006 - PAGE 61 OF THE STANDARD PLANS BOOK DATED MAY 2006.

REVISED STANDARD PLAN RSP A77G3

2006 REVISED STANDARD PLAN RSP A77G3

12-10-07

DIST	COUNTY	ROUTE	POST MILES TOTAL PROJECT	SHEET NO.	TOTAL SHEETS
12	Ora	5	1.3/1.7	79	127

Randell D. Hiatt
REGISTERED CIVIL ENGINEER

June 6, 2008
PLANS APPROVAL DATE

Randell D. Hiatt
No. C50200
Exp. 6-30-09
CIVIL
REGISTERED PROFESSIONAL ENGINEER
STATE OF CALIFORNIA

The State of California or its officers or agents shall not be responsible for the accuracy or completeness of electronic copies of this plan sheet.

To accompany plans dated 3-23-09

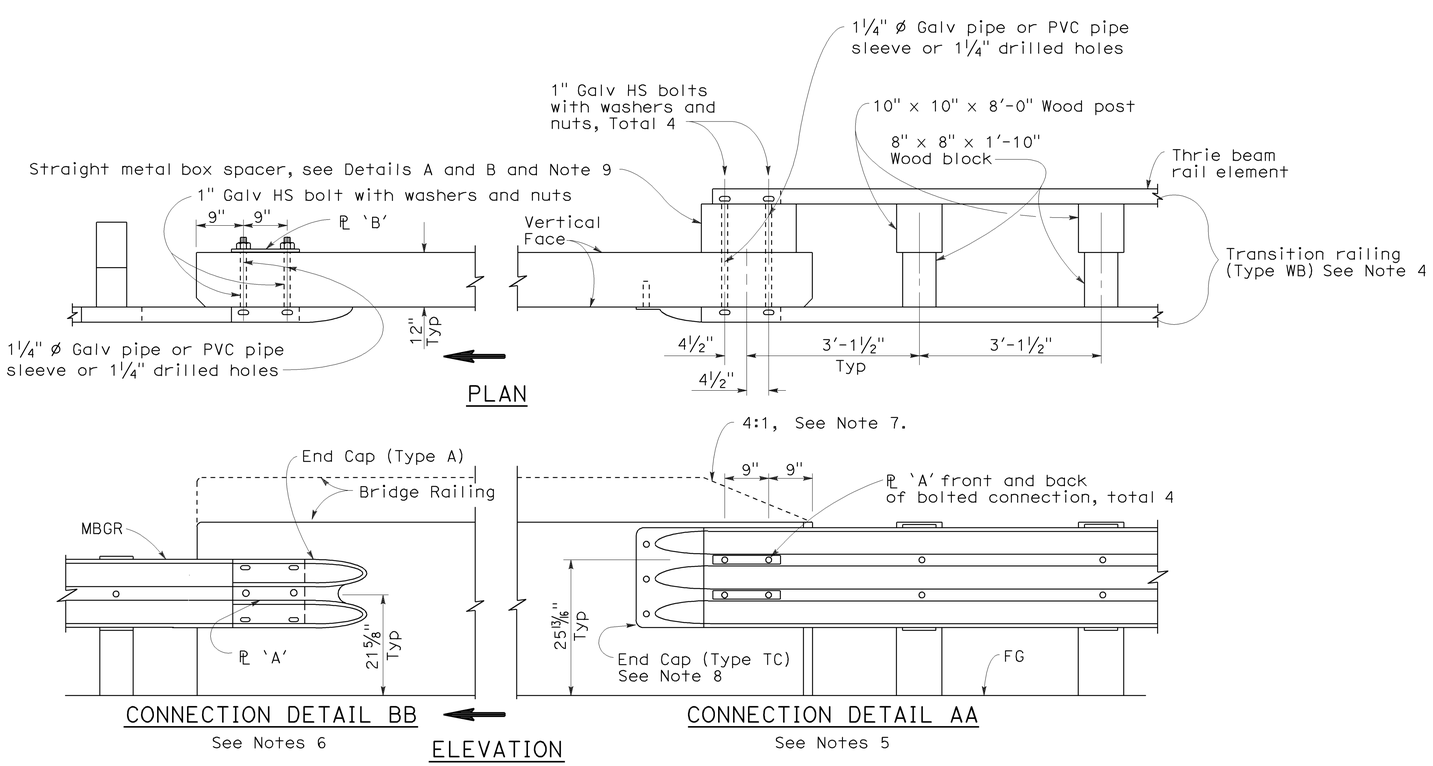

GUARD RAILING CONNECTION TO BRIDGE RAILING WITHOUT SIDEWALK

NOTES:

1. See Revised Standard Plan RSP A77J2 for additional connection details to bridges without sidewalks.
2. Additional details of posts, blocks and hardware are shown on Standard Plan A77B1, A77C1 and A77C2.
3. Direction of adjacent traffic indicated by ➡.
4. For additional details of Transition Railing (Type WB), see Standard Plan A77J4. Transition Railing (Type WB) transitions the 12 gage w-beam standard railing section of guard railing to a heavier gage nested thrie beam railing section which is connected to the concrete bridge railing.
5. For typical use of Connection Detail AA, see Layout Types 12A and 12B on Revised Standard Plan RSP A77F1, Layout Types 12C and 12D on Standard Plan A77F2, and Layout Type 12E on Revised Standard Plan RSP A77F3.
6. For typical use of Connection Detail BB, see Layout Type 12D (structure departure railing connection) on Standard Plan A77F2 and Layout Type 12DD on Standard Plan A77F5.
7. Where the height of the bridge railing exceeds the height of the thrie beam railing by more than 1" at Connection Detail AA, taper the top of the end of the bridge railing at 4:1 to match the top elevation of the thrie beam rail.
8. For details of End Cap (Type TC), see Standard Plan A77J4.
9. See Standard Plan A77J4 for additional details regarding depth dimension for straight metal box spacer.

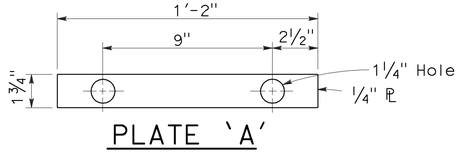

PLATE 'A'

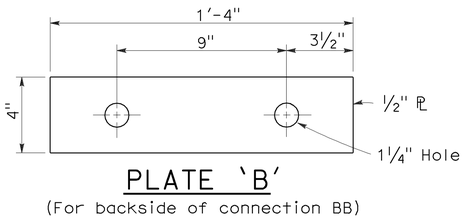

PLATE 'B'
(For backside of connection BB)

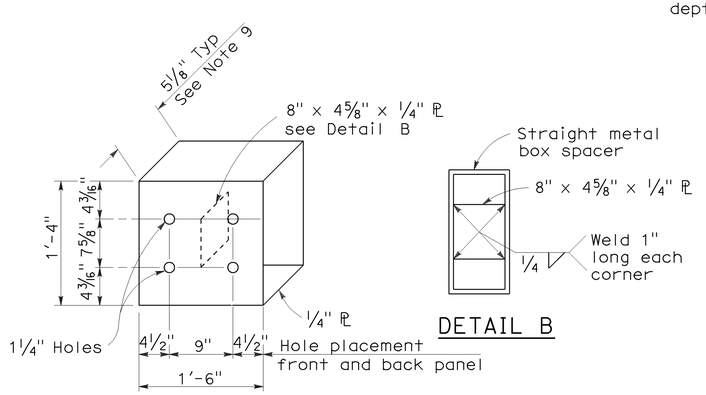

DETAIL A

STRAIGHT METAL BOX SPACER

STATE OF CALIFORNIA
DEPARTMENT OF TRANSPORTATION

METAL BEAM GUARD RAILING CONNECTIONS TO BRIDGE RAILINGS WITHOUT SIDEWALKS DETAILS No.1

NO SCALE

RSP A77J1 DATED JUNE 6, 2008 SUPERSEDES STANDARD PLAN A77J1
DATED MAY 1, 2006 - PAGE 72 OF THE STANDARD PLANS BOOK DATED MAY 2006.

REVISED STANDARD PLAN RSP A77J1

2006 REVISED STANDARD PLAN RSP A77J1

12-10-07

DIST	COUNTY	ROUTE	POST MILES TOTAL PROJECT	SHEET NO.	TOTAL SHEETS
12	Ora	5	1.3/1.7	80	127

Randell D. Hiatt
REGISTERED CIVIL ENGINEER

June 6, 2008
PLANS APPROVAL DATE

REGISTERED PROFESSIONAL ENGINEER — Randell D. Hiatt — No. C50200 — Exp. 6-30-09 CIVIL — STATE OF CALIFORNIA

The State of California or its officers or agents shall not be responsible for the accuracy or completeness of electronic copies of this plan sheet.

To accompany plans dated 3-23-09

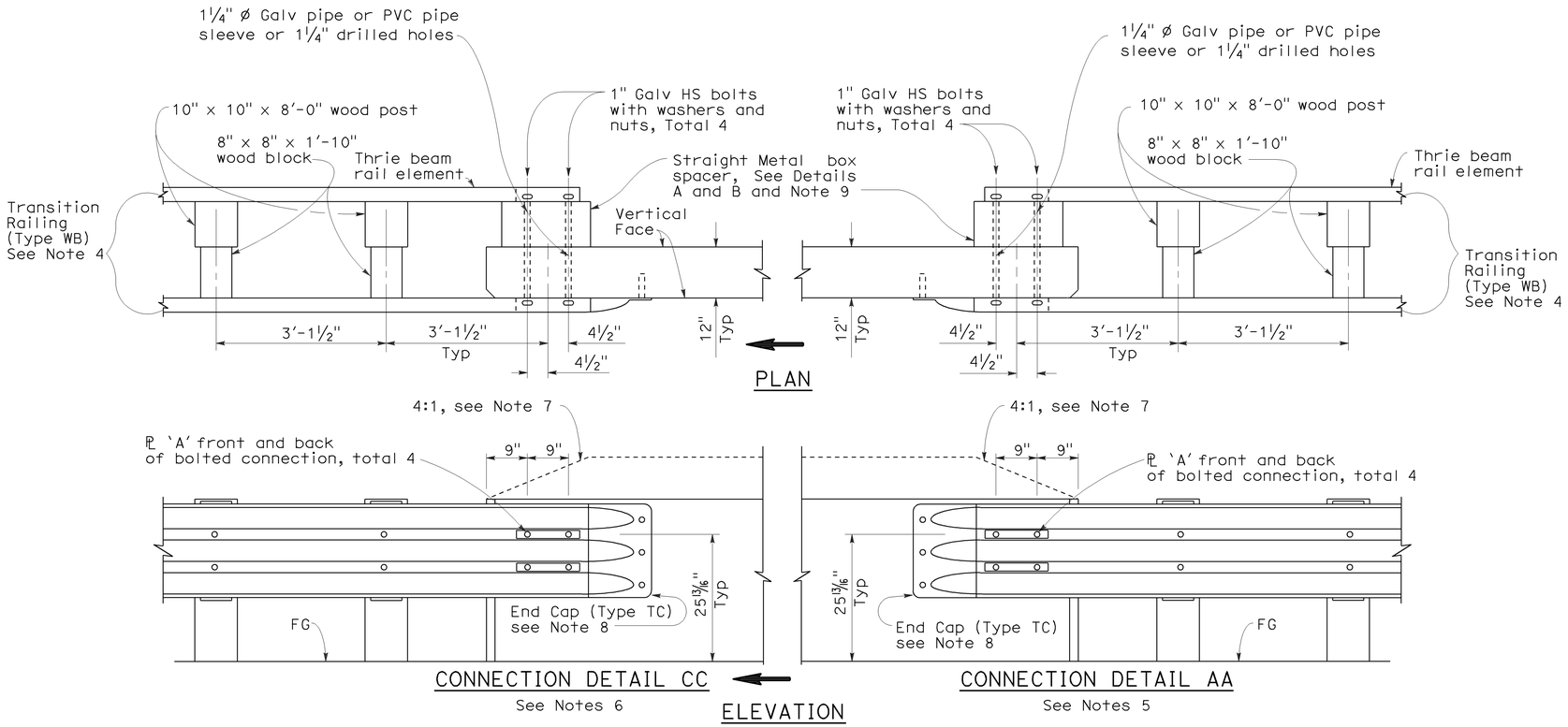

GUARD RAILING CONNECTION TO BRIDGE RAILING WITHOUT SIDEWALK

NOTES:

1. See Revised Standard Plan RSP A77J1 for additional connection details to bridges without sidewalks.
2. Additional details of posts, blocks and hardware are shown on Standard Plan A77B1, A77C1 and A77C2.
3. Direction of adjacent traffic indicated by ⟹.
4. For additional details of Transition Railing (Type WB), see Standard Plan A77J4. Transition Railing (Type WB) transitions the 12 gage w-beam standard railing section of guard railing to a heavier gage nested thrie beam railing section which is connected to the concrete bridge railing.
5. For typical use of Connection Detail AA, see Layout Types 12A and 12B on Revised Standard Plan RSP A77F1, Layout Types 12C and 12D on Standard Plan A77F2, and Layout Type 12E on Revised Standard Plan RSP A77F3.
6. For typical use of Connection Detail CC, see Layout Types 12AA and 12BB on Standard Plan A77F4 and Layout Type 12CC on Standard Plan A77F5.
7. Where the height of the bridge railing exceeds the height of the thrie beam railing by more than 1" at Connection Detail AA and connection Detail CC, taper the top of the end of the bridge railing at 4:1 to match the top elevation of the thrie beam railing.
8. For details of End Cap (Type TC), see Standard Plans A77J4.
9. See Standard Plans A77J4 for additional details regarding depth dimension for straight metal box spacer.

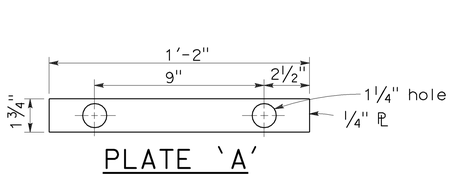

PLATE 'A'

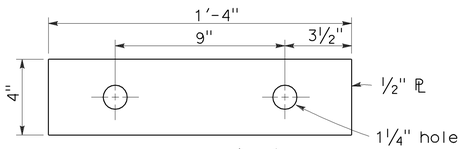

PLATE 'B'
(For backside of connection BB)

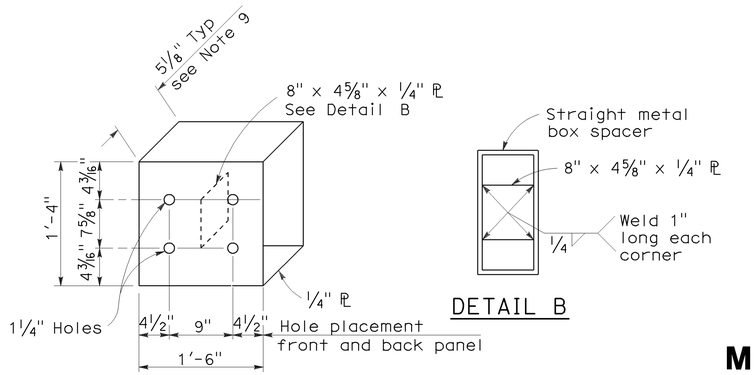

DETAIL A

DETAIL B

STRAIGHT METAL BOX SPACER

STATE OF CALIFORNIA
DEPARTMENT OF TRANSPORTATION

METAL BEAM GUARD RAILING CONNECTIONS TO BRIDGE RAILINGS WITHOUT SIDEWALKS DETAILS No.2

NO SCALE

RSP A77J2 DATED JUNE 6, 2008 SUPERSEDES STANDARD PLAN A77J2
DATED MAY 1, 2006 - PAGE 73 OF THE STANDARD PLANS BOOK DATED MAY 2006.

REVISED STANDARD PLAN RSP A77J2

2006 REVISED STANDARD PLAN RSP A77J2

12-10-07

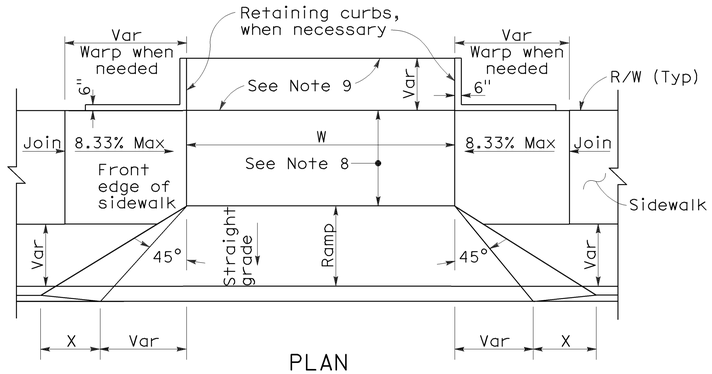

PLAN

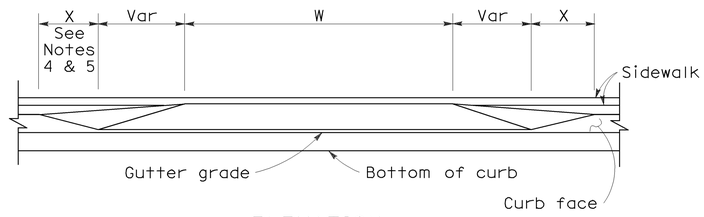

ELEVATION

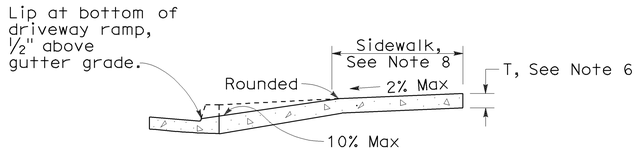

CASE A

Typical driveway, sidewalk not depressed

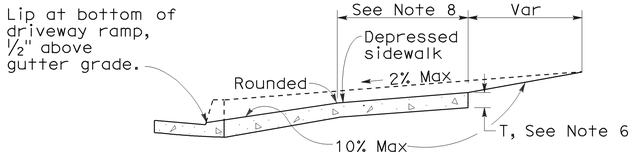

CASE B

Driveway with depressed sidewalk

SECTIONS

CURB QUANTITIES

TYPE	CUBIC YARDS PER LINEAR FOOT
A1-6	0.02585
A1-8	0.03084
A2-6	0.05903
A2-8	0.06379
A3-6	0.01036
A3-8	0.01435
B1-4	0.02185
B1-6	0.02930
B2-4	0.05515
B2-6	0.06171
B3-4	0.00641
B3-6	0.01074
B4	0.05709
D-4	0.04083
D-6	0.06804
E	0.06661

DIST	COUNTY	ROUTE	POST MILES TOTAL PROJECT	SHEET NO.	TOTAL SHEETS
12	Ora	5	1.3/1.7	81	127

REGISTERED CIVIL ENGINEER

November 17, 2006
PLANS APPROVAL DATE

REGISTERED PROFESSIONAL ENGINEER
Michael Janzen
No. 44788
Exp. 03-31-08
CIVIL
STATE OF CALIFORNIA

The State of California or its officers or agents shall not be responsible for the accuracy or completeness of electronic copies of this plan sheet.

To accompany plans dated 3-23-09

TABLE A

CURB TYPE	DIMENSIONS "H1"	"H2"	"W1"	"W2"
A1-6	1′-2"	6"	7½"	1½"
A1-8	1′-4"	8"	8"	2"
A2-6	1′-0"	6"	2′-7½"	1½"
A2-8	1′-2"	8"	2′-8"	2"
A3-6	6"	5"	7¼"	1¼"
A3-8	8"	7"	7¾"	1¾"
B1-4	1′-0"	4"	7½"	2½"
B1-6	1′-2"	6"	9"	4"
B2-4	10"	4"	2′-7½"	2½"
B2-6	1′-0"	6"	2′-9"	4"
B3-4	4"	3"	7"	2"
B3-6	6"	5"	8½"	3½"
D-4	10"	4"	1′-6"	1′-1"
D-6	1′-0"	6"	2′-2"	1′-8"

DRIVEWAYS

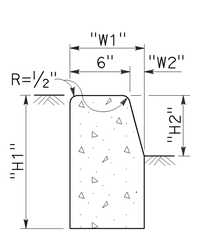

TYPE A1 CURBS

See Table A

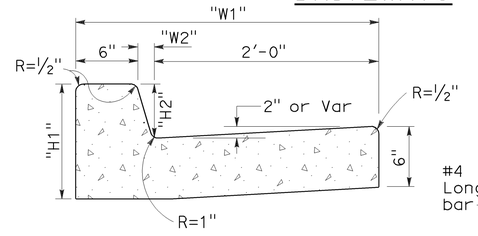

TYPE A2 CURBS

See Table A

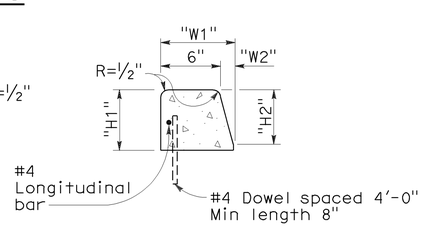

TYPE A3 CURBS

Superimposed on existing pavement
See Table A

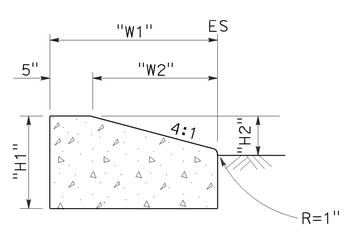

TYPE D CURBS

See Table A

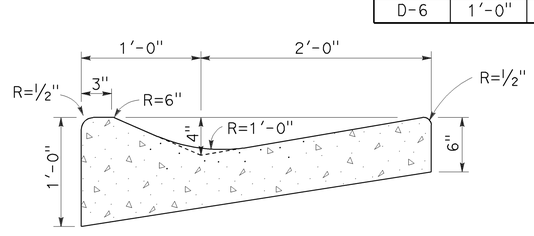

TYPE E CURB

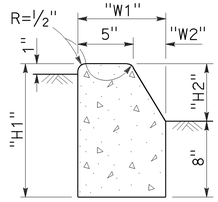

TYPE B1 CURBS

See Table A

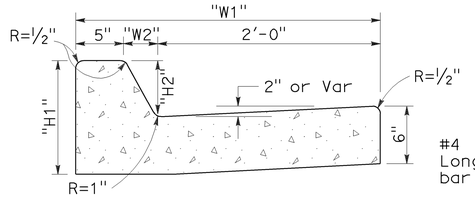

TYPE B2 CURBS

See Table A

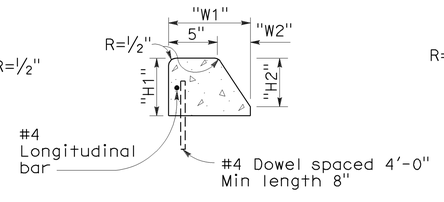

TYPE B3 CURBS

Superimposed on existing pavement
See Table A

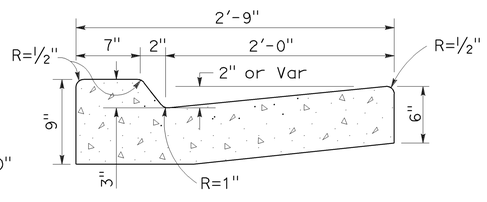

TYPE B4 CURBS

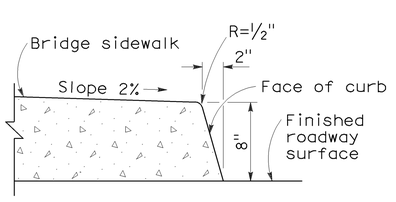

TYPE H CURB

On Bridges

NOTES:

1. Case A driveway section typically applies.
2. Use Case B driveway section when ramp slopes would exceed 10% in Case A.
3. Use Case B driveway section when sidewalk cross slope would exceed 2% in Case A.
4. X=3′-0" except for curb heights over 10" where 4:1 slopes shall be used on curb slope.

CURBS

5. X is a variable when sidewalk is located where wheelchairs may traverse the surface. Slopes shall not exceed 8.33%.
6. Sidewalk and ramp thickness "T" at driveway shall be 4" for residental and 6" for commercial.
7. Difference in slope of the driveway ramp and the slope of a line between the gutter and a point on the roadway 5′-0" from gutter line shall not exceed 15%. Reduce driveway ramp slope, not gutter slope, where required.
8. Minimum width of clear passageway for sidewalk shall be 4′-0".
9. Retaining curbs and acquisition of construction easement may be necessary for narrow sidewalks or curb heights in excess of 6".
10. Across the pedestrian route at curb ramp locations, the gutter pan slope shall not exceed 1" of depth for each 2′-0" of width.

STATE OF CALIFORNIA
DEPARTMENT OF TRANSPORTATION

CURBS AND DRIVEWAYS

NO SCALE

RSP A87A DATED NOVEMBER 17, 2006 SUPERSEDES STANDARD PLAN A87A
DATED MAY 1, 2006 - PAGE 113 OF THE STANDARD PLANS BOOK DATED MAY 2006.

REVISED STANDARD PLAN RSP A87A

2006 REVISED STANDARD PLAN RSP A87A

10-25-06

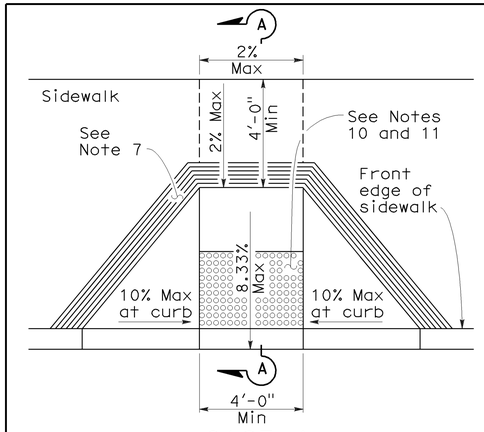

CASE A

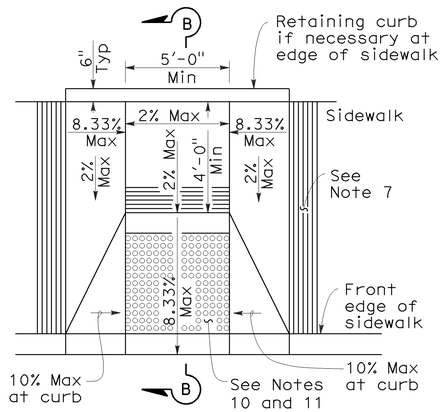

CASE B

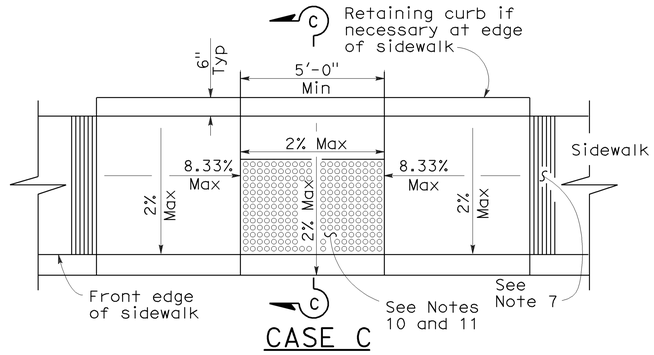

CASE C

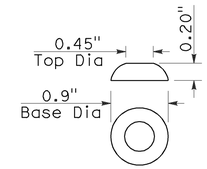

RAISED TRUNCATED DOME

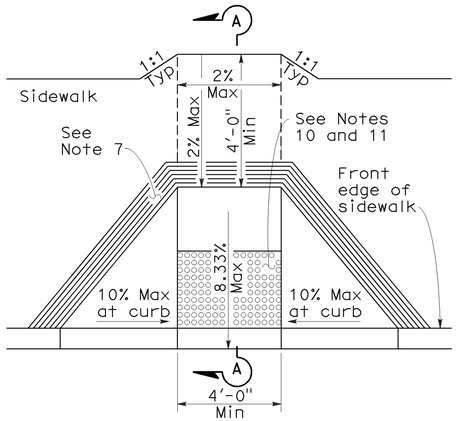

CASE D

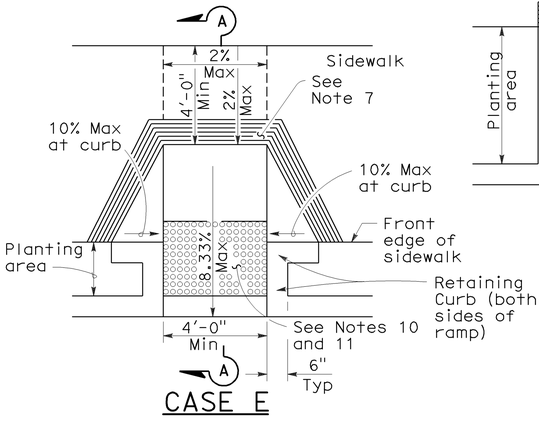

CASE E

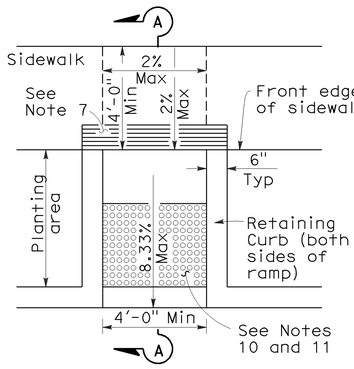

CASE F

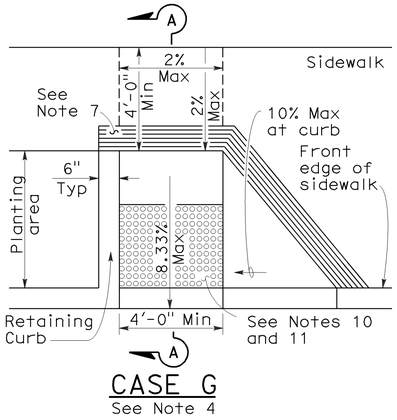

CASE G

See Note 4

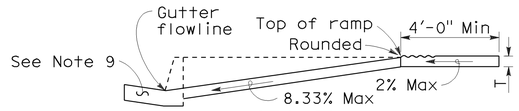

SECTION A-A

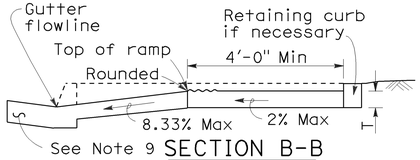

SECTION B-B

Depress entire sidewalk as required

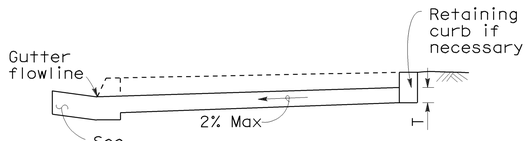

SECTION C-C

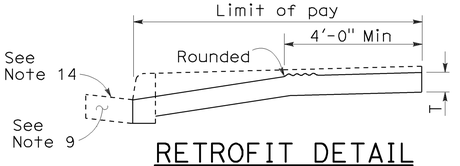

RETROFIT DETAIL

Existing curb and sidewalk

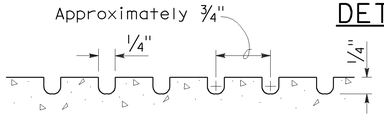

GROOVING DETAIL

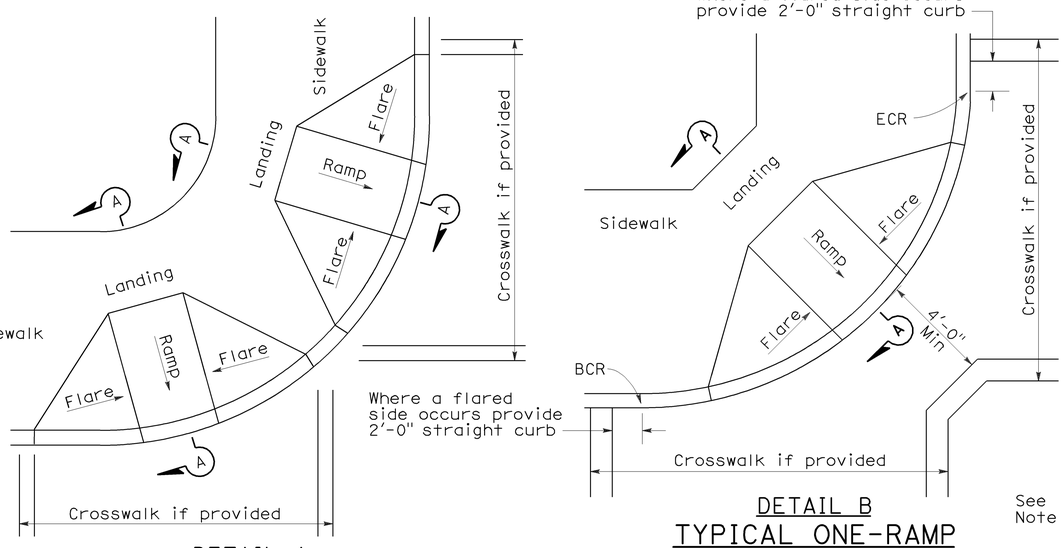

DETAIL A

TYPICAL TWO-RAMP CORNER INSTALLATION

See Note 1

DETAIL B

TYPICAL ONE-RAMP CORNER INSTALLATION

See Notes 1 and 3

NOTES:

1. As site conditions dictate, Case A through Case G curb ramps may be used for corner installations similar to those shown in Detail A and Detail B. The case of curb ramps used in Detail A do not have to be the same. Case A through Case G curb ramps also may be used at mid block locations, as site conditions dictate.
2. If distance from curb to back of sidewalk is too short to accommodate ramp and 4'-0" platform (landing) as shown in Case A, the sidewalk may be depressed longitudinally as in Case B, or C or may be widened as in Case D.
3. When ramp is located in center of curb return, crosswalk configuration must be similar to that shown for Detail B.
4. As site conditions dictate, the retaining curb side and the flared side of the Case G ramp shall be constructed in reversed position.
5. If located on a curve, the sides of the ramp need not be parallel, but the minimum width of the ramp shall be 4'-0".
6. Side slope of ramp flares vary uniformly from a maximum of 10% at curb to conform with longitudinal sidewalk slope adjacent to top of the ramp, except in Case C and Case F.
7. The curb ramp shall be outlined, as shown, with a 1'-0" wide border with ¼" grooves approximately ¾" on center. See grooving detail.
8. Transitions from ramps and landing to walks, gutters or streets shall be flush and free of abrupt changes.
9. Maximum slopes of adjoining gutters, the road surface immediately adjacent to the curb ramp or accessible route shall not exceed 5 percent within 4'-0" of the top and bottom of the curb ramp.
10. Curb ramps shall have a detectable warning surface that extends the full width and 3'-0" depth of the ramp. Detectable Warning Surfaces shall conform to the details on this plan and the requirements in the Special Provisions.
11. The edge of the detectable warning surface nearest the street shall be between 6" and 8" from the gutter flowline.
12. Sidewalk and ramp thickness, "T", shall be 3½" minimum.
13. Utility pull boxes, manholes, vaults and all other utility facilities within the boundaries of the curb ramp will be relocated or adjusted to grade by the owner prior to, or in conjunction with, curb ramp construction.
14. For retrofit conditions, removal and replacement of curb apron will be at the Contractor's option, unless otherwise shown on project plans.

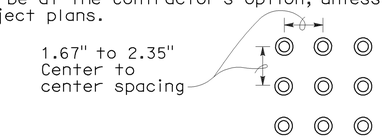

RAISED TRUNCATED DOME PATTERN (IN-LINE)

DETECTABLE WARNING SURFACE

See Note 10

DIST	COUNTY	ROUTE	POST MILES TOTAL PROJECT	SHEET NO.	TOTAL SHEETS
12	Ora	5	1.3/1.7	82	127

REGISTERED CIVIL ENGINEER

Hector David Cordova No. C41957 Exp. 3-31-08 CIVIL — REGISTERED PROFESSIONAL ENGINEER — STATE OF CALIFORNIA

September 1, 2006

PLANS APPROVAL DATE

The State of California or its officers or agents shall not be responsible for the accuracy or completeness of electronic copies of this plan sheet.

To accompany plans dated 3-23-09

STATE OF CALIFORNIA
DEPARTMENT OF TRANSPORTATION

CURB RAMP DETAILS

NO SCALE

RSP A88A DATED SEPTEMBER 1, 2006 SUPERSEDES STANDARD PLAN A88A DATED MAY 1, 2006 - PAGE 115 OF THE STANDARD PLANS BOOK DATED MAY 2006.

REVISED STANDARD PLAN RSP A88A

2006 REVISED STANDARD PLAN RSP A88A

8-3-06

DIST	COUNTY	ROUTE	POST MILES TOTAL PROJECT	SHEET NO.	TOTAL SHEETS
12	Ora	5	1.3/1.7	83	127

Raymond Don Tsztoo
REGISTERED CIVIL ENGINEER

January 18, 2008
PLANS APPROVAL DATE

Raymond Don Tsztoo No. C37332 Exp. 6-30-08 CIVIL — REGISTERED PROFESSIONAL ENGINEER — STATE OF CALIFORNIA

The State of California or its officers or agents shall not be responsible for the accuracy or completeness of electronic copies of this plan sheet.

To accompany plans dated 3-23-09

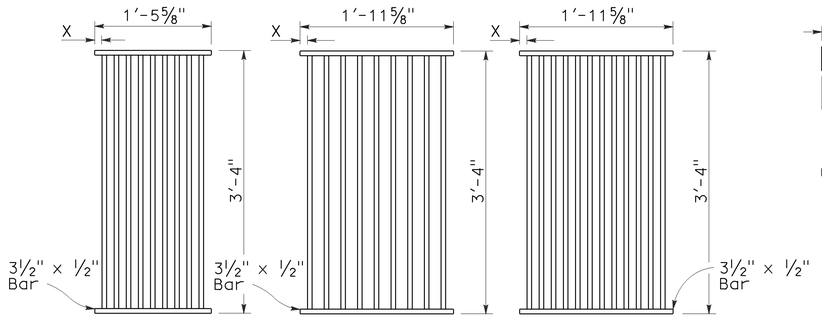

TYPE 18-9

1⅜" Clear spacing. Use within the roadbed on highways where bicycles and pedestrians are excluded.

TYPE 24-9

2" Clear spacing. Use in locations off the roadbed on all types of highways.

TYPE 24-12

1⅜" Clear spacing. Use within the roadbed on highways where bicycles and pedestrians are excluded.

RECTANGULAR GRATE DETAILS

(See table below)

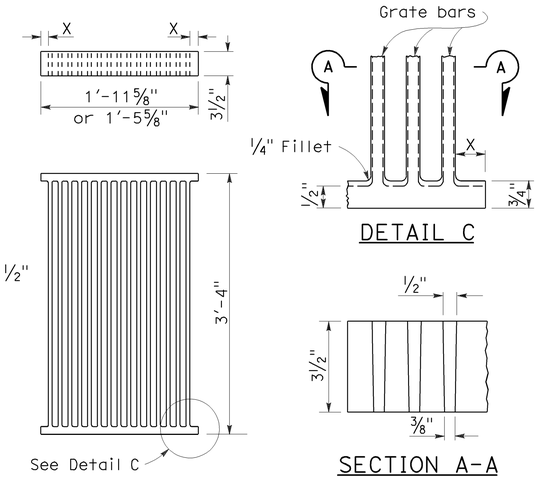

DETAIL C

SECTION A-A

ALTERNATIVE CAST NODULAR IRON GRATE OR CAST STEEL GRATE

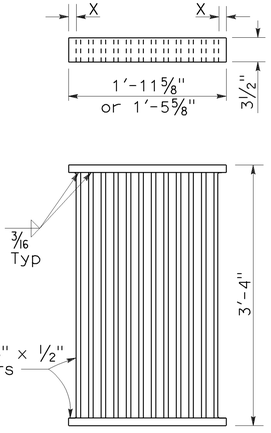

ALTERNATIVE WELDED GRATE

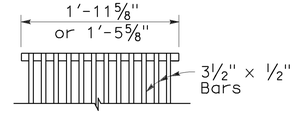

CAST END BLOCK

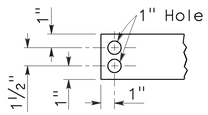

END OF BAR

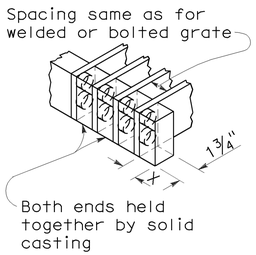

ALTERNATIVE CAST NODULAR IRON OR CAST STEEL END BLOCK GRATE

NOTES:

1. Grate type numbers refer to approximate width of grate in inches and number of bars, respectively.
2. Contractor has the option of using cast nodular iron, cast steel, welded, bolted, or cast end block grate.
3. See Special Provisions for requirements pertaining to galvanizing or asphalt dipping of grates and frames.
4. Rounded top of bars optional on all grates.
5. Pipe inlets with a grate shall be placed so that bars parallel direction of principle surface flow.
6. Full penetration butt welds may be substituted for the fillet welds on all anchors.
7. Standard square, hexagon, round or equivalent headed anchors may be substituted for the right angle hooks on the anchors shown on this plan.
8. Grate and frame weights are based on welded grates (weights of face angles, steps, protection bars, etc. are not included).

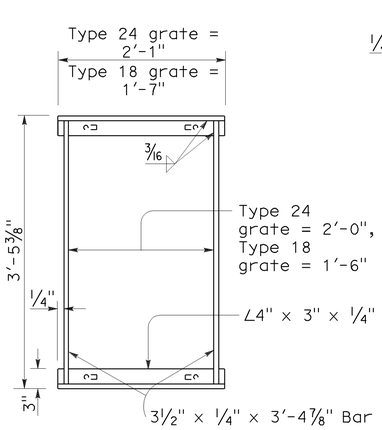

TYPICAL FRAME

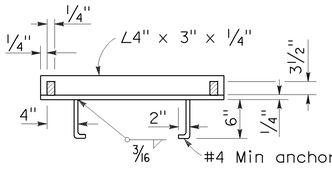

CROSS SECTION

(Thru frame)

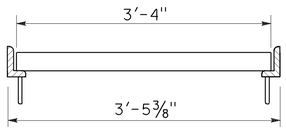

LONGITUDINAL SECTION

(Thru frame and grate)

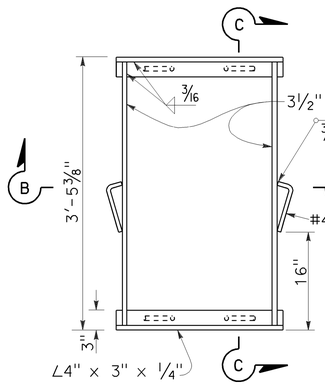

TYPICAL FRAME

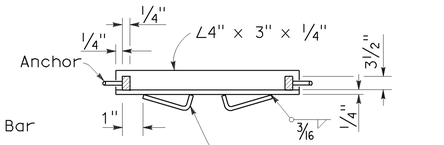

SECTION B-B

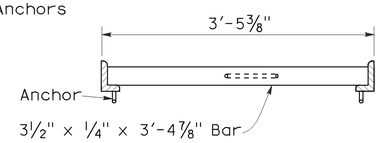

SECTION C-C

ALTERNATIVE ANCHOR FOR RECTANGULAR FRAME

(For details not shown, See Rectangular Frame Details)

RECTANGULAR FRAME DETAILS

(For all rectangular grates)

GRATE BAR SPACING TABLE

TYPE	No. OF BARS	CLEAR BAR SPACING	X
18-9	9	1⅜"	1 1/16"
24-9	9	2"	1⅜16"
24-12	12	1⅜"	1¼"

INLET TYPE	COVER TYPE	WEIGHT LB
OS	PLATE	174
OL-7	PLATE	170
OL-10	PLATE	170
OL-14	PLATE	170
OL-21	PLATE	170
OCP	PLATE	112
OCPI	PLATE	112
OCPI	REDWOOD	42
OMP	PLATE	177
OMPI	PLATE	177

INLET TYPE	GRATE TYPE	No. OF GRATES	WEIGHT LB
GDO	24-12	2	634
GOL-7	24-12	1	326
GOL-10	24-12	1	326
GO,G1,G2,G3,G4 (TYPE 24)	24-9	1	263
	24-12	1	326
G4 (TYPE 18),G5,G6	18-9	1	249
GT1	18-9	2	498
GT2	18-9	2	498
GT3	24-12	2	652
GT4	24-12	2	652
TRASH RACK			22

BASIS FOR MISC IRON & STEEL FINAL PAY WEIGHTS FOR DRAINAGE INLETS

(See General Notes, No 8)

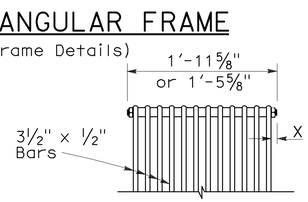

BOLTED END BLOCK

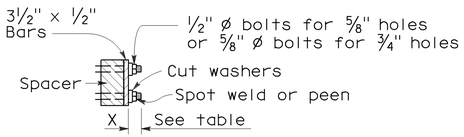

BOLTING DETAIL

ALTERNATIVE BOLTED GRATE

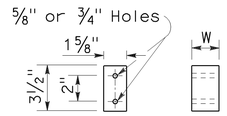

BAR SPACER

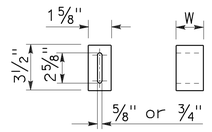

ALTERNATIVE SPACER

W = 1⅜" or 2"

STATE OF CALIFORNIA
DEPARTMENT OF TRANSPORTATION

GRATE DETAILS

NO SCALE

RSP D77A DATED JANUARY 18, 2008 SUPERSEDES STANDARD PLAN D77A DATED MAY 1, 2006 - PAGE 155 OF THE STANDARD PLANS BOOK DATED MAY 2006.

REVISED STANDARD PLAN RSP D77A

2006 REVISED STANDARD PLAN RSP D77A

12-14-07

DIST	COUNTY	ROUTE	POST MILES TOTAL PROJECT	SHEET NO.	TOTAL SHEETS
12	Ora	5	1.3/1.7	84	127

Gregory A. Balzer
LICENSED LANDSCAPE ARCHITECT

March 7, 2008
PLANS APPROVAL DATE

LICENSED LANDSCAPE ARCHITECT
Gregory A. Balzer 2576
Signature
02-28-2009
Renewal Date
02-21-2008
Date
STATE OF CALIFORNIA

The State of California or its officers or agents shall not be responsible for the accuracy or completeness of electronic copies of this plan sheet.

To accompany plans dated 3-23-09

EXISTING	PROPOSED	ITEM DESCRIPTION
		WATER METER (WM)
		BACKFLOW PREVENTER ASSEMBLY (BPA)
		BACKFLOW PREVENTER ASSEMBLY IN ENCLOSURE (BPAE)
		BACKFLOW PREVENTER ENCLOSURE (BPE)
		BOOSTER PUMP (BP)
		TRUCK LOADING STANDPIPE (TLS)
FS	FS	FLOW SENSOR (FS)
		MASTER IRRIGATION CONTROLLER (MIC)
		AUXILIARY IRRIGATION CONTROLLER (AIC)
		IRRIGATION CONTROLLER (IC)/ IRRIGATION CONTROLLER (IC) (BATTERY)
		IRRIGATION CONTROLLER(S) IN CONTROLLER ENCLOSURE CABINET (ICC)
		CONTROL AND NEUTRAL CONDUCTORS (CNC)
SCC	SCC	SPRINKLER CONTROL CONDUIT (SCC)
		CONDUIT (COND)
		IRRIGATION SLEEVE
dip	DIP	DUCTILE IRON PIPE (SUPPLY LINE) (MAIN) (DIP)
		GALVANIZED STEEL PIPE (SUPPLY LINE) (MAIN) (GSP)
		GALVANIZED STEEL PIPE (SUPPLY LINE) (LATERAL) (GSP)
		PLASTIC PIPE (PR 200) (SUPPLY LINE) (MAIN)
		PLASTIC PIPE (PR 200) (SUPPLY LINE) (LATERAL)
		PLASTIC PIPE (IRRIGATION LINE)
		REMOTE CONTROL VALVE (RCV) REMOTE CONTROL VALVE (MASTER) (RCVM)
		MANUAL CONTROL VALVE (MCV)
		VALVE ASSEMBLY UNIT (VAU)
		WYE STRAINER (WS)
		FILTER ASSEMBLY UNIT (FAU)
		GATE VALVE (GV)
		BALL VALVE (BV)

EXISTING	PROPOSED	ITEM DESCRIPTION
		QUICK COUPLER VALVE (QCV)
		CAM COUPLING ASSEMBLY (CCA)
		PRESSURE REDUCING VALVE (PRV)
		PRESSURE RELIEF VALVE (PRLV)
		FLOW CONTROL VALVE (FCV)
		COMBINATION AIR RELEASE VALVE (CARV)
		CHECK VALVE (CV)
		FLUSH VALVE (FV)
		NOZZLE LINE W/TURNING UNION
		IRRIGATION SYSTEM
		IRRIGATION SYSTEM TO BE REMOVED
		CHAIN LINK GATE
		QUICK COUPLING VALVE W/SPRINKLER PROTECTOR
3	3	SPRINKLER W/SPRINKLER PROTECTOR
	C	CONNECT TO EXISTING SYSTEM
		CAP
		CAP EXISTING

VALVE CODE

RCV SIZE
IRRIGATION CONTROLLER
CONTROLLER STATION
VALVE IN PARALLEL (IF APPLICABLE)
GPM
QUANTITY OF SPRINKLERS (WHEN SHOWN)

* 2½"-A-2b-40 -60

MCV SIZE
VALVE NUMBER
GPM
QUANTITY OF TYPE SPRINKLERS (WHEN SHOWN)

* 2"-3-30 -50

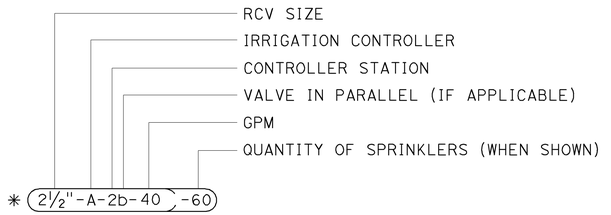

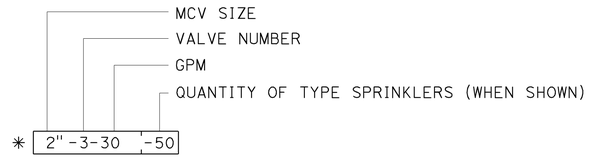

* VALVE CODES FOR EXISTING VALVES ARE SHOWN IN A DASHED ENCLOSURE.

STATE OF CALIFORNIA
DEPARTMENT OF TRANSPORTATION

PLANTING AND IRRIGATION SYMBOLS

NO SCALE

RSP H2 DATED MARCH 7, 2008 SUPERSEDES STANDARD PLAN H2
DATED MAY 1, 2006 - PAGE 202 OF THE STANDARD PLANS BOOK DATED MAY 2006.

REVISED STANDARD PLAN RSP H2

2006 REVISED STANDARD PLAN RSP H2

2-20-08

DIST	COUNTY	ROUTE	POST MILES TOTAL PROJECT	SHEET NO.	TOTAL SHEETS
12	Ora	5	1.3/1.7	85	127

Randell D. Hiatt
REGISTERED CIVIL ENGINEER

June 6, 2008
PLANS APPROVAL DATE

REGISTERED PROFESSIONAL ENGINEER
Randell D. Hiatt
No. C50200
Exp. 6-30-09
CIVIL
STATE OF CALIFORNIA

The State of California or its officers or agents shall not be responsible for the accuracy or completeness of electronic copies of this plan sheet.

To accompany plans dated 3-23-09

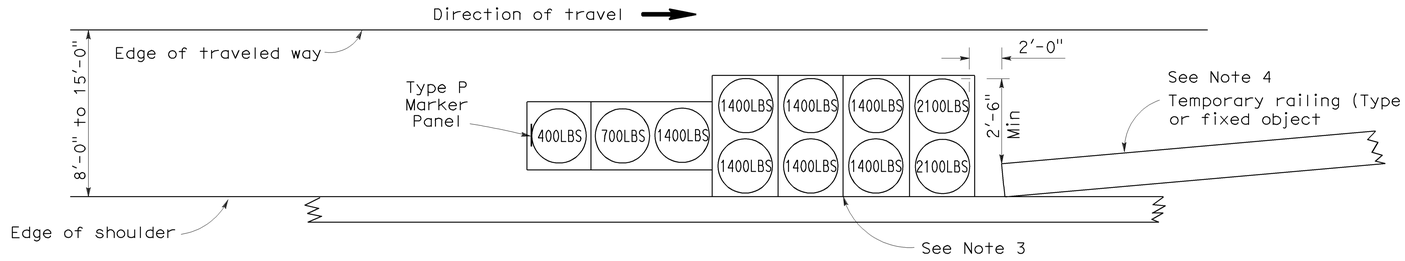

ARRAY 'TS11'

Approach speed less than 45 mph
See Note 9

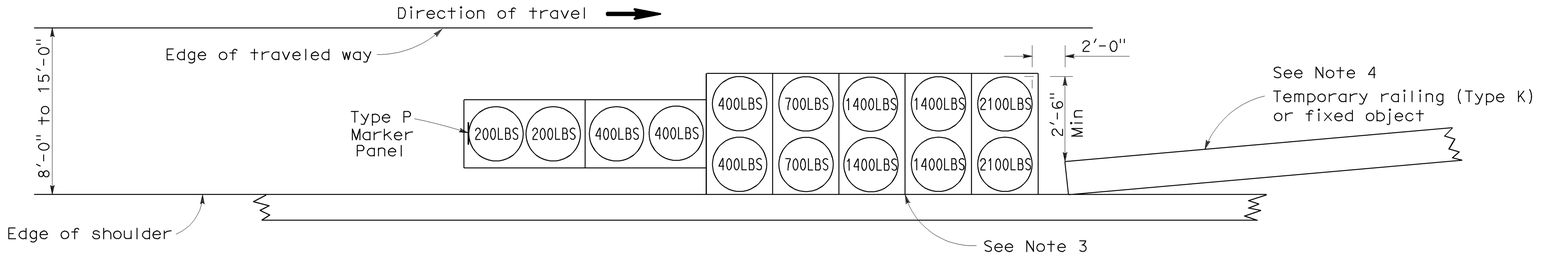

ARRAY 'TS14'

Approach speed 45 mph or more
See Note 9

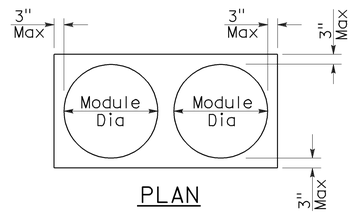

PLAN

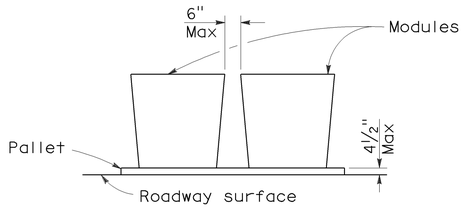

ELEVATION

CRASH CUSHION PALLET DETAIL

See Note 11

NOTES:

1. (XXX) Indicates sand filled module location and weight of sand in pounds for each module. Module spacing is based on the greater diameter of the module.
2. All sand weights are nominal.
3. The temporary crash cushion arrays shown on this plan shall be used only in locations where there will be traffic on one side of the temporary crash cushion array.
4. If the fixed object or approach end of the temporary railing is less than 15'-0" from the edge of traveled way, a temporary crash cushion is required in a construction or work zone.
5. Temporary crash cushion arrays shall not encroach on the traveled way.
6. Arrays for median shoulders shall conform to details shown on this plan for outside shoulders.
7. Place the Type P marker panel so that the bottom of the panel rests upon the pallet and faces traffic.
8. Refer to Standard Plan A73B for marker details.
9. For shoulder widths less than 8'-0", appropriate approved crash cushion protection, other than sand filled modules, shall be provided at fixed objects and at approach ends of temporary railing. The specific type of crash cushion shall be as shown on the project plans or as specified in the Special Provisions, or if not shown on the project plans or specified in the Special Provisions, shall be as approved by the Engineer.
10. Approach speeds indicated conform to NCHRP 350 Report criteria.
11. Use of pallets is optional.

STATE OF CALIFORNIA
DEPARTMENT OF TRANSPORTATION

TEMPORARY CRASH CUSHION, SAND FILLED (SHOULDER INSTALLATIONS)

NO SCALE

RSP T2 DATED JUNE 6, 2008 SUPERSEDES STANDARD PLAN T2
DATED MAY 1, 2006 - PAGE 213 OF THE STANDARD PLANS BOOK DATED MAY 2006.

REVISED STANDARD PLAN RSP T2

2006 REVISED STANDARD PLAN RSP T2

5-15-08

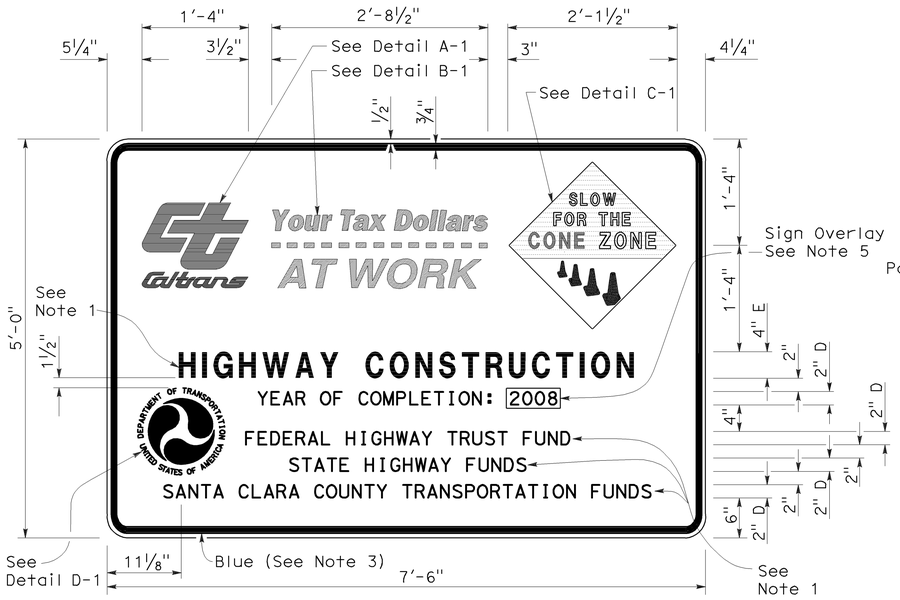

TYPE 1

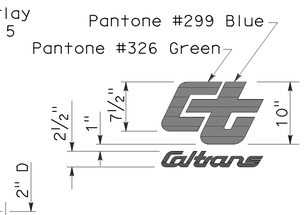

DETAIL A-1

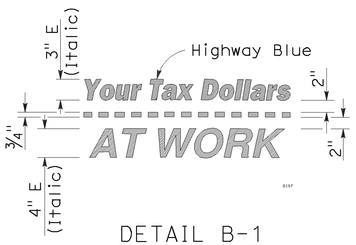

DETAIL B-1
(See Note 3)

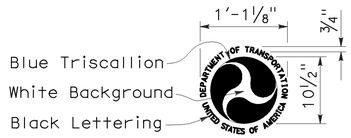

DETAIL D-1
(See Note 6)

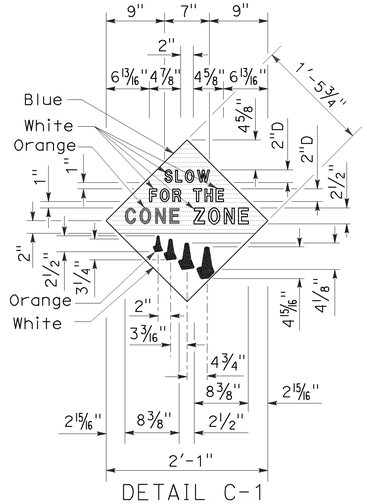

DETAIL C-1
(See Note 4)

NOTES:

1. The sign messages shown for type of project and fund types are examples only. See the Special Provisions for the applicable type of project and fund type messages to be used.
2. Except as otherwise shown, the legend of sign shall be black on a white background (non-reflective).
3. The border of the signs and details "B-1" and "B-2" shall be blue (non-reflective).
4. The diamond in details "C-1" and "C-2" shall be blue for the background of message, " SLOW FOR THE CONE ZONE", and white background for the orange cones. The color and type of font for the "SLOW FOR THE CONE ZONE" message shall be: "SLOW" white D; "FOR THE" white D; "CONE" orange Arial font; "ZONE" white Arial font.
5. Year of completion of project construction shown on the overlay is an example only. See the Special Provisions.
6. Use when the Project involves Federal Highway Trust Fund.

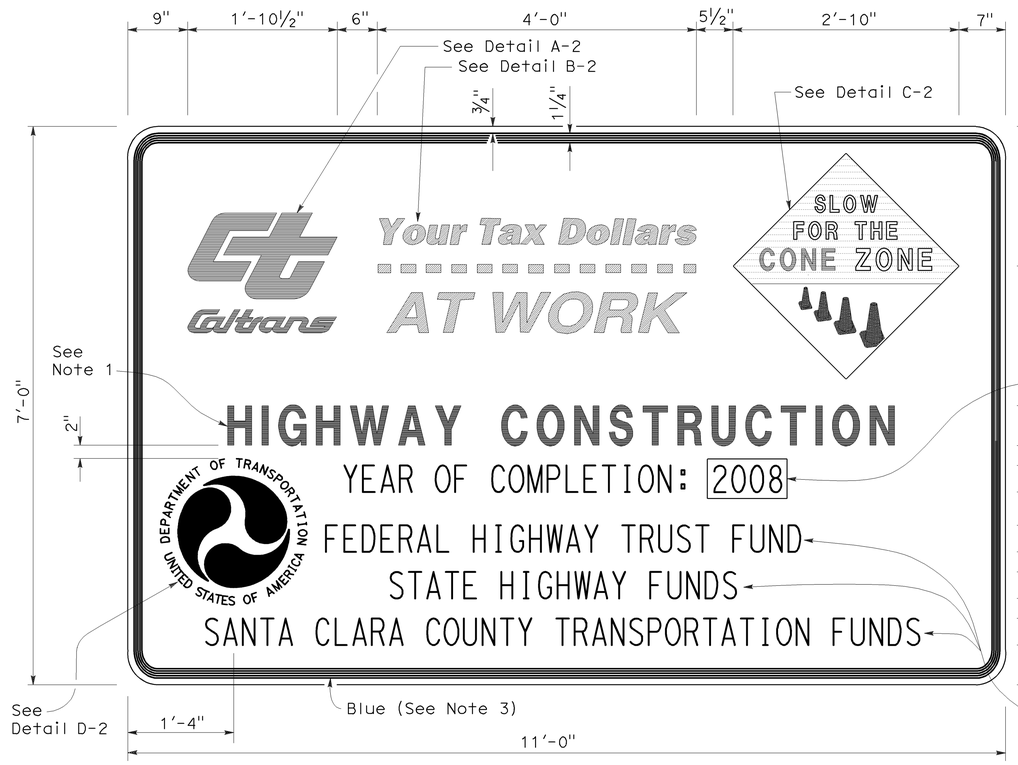

TYPE 2

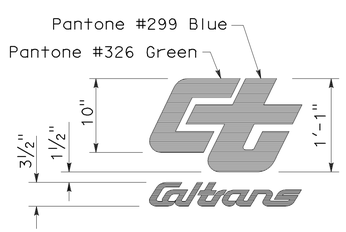

DETAIL A-2

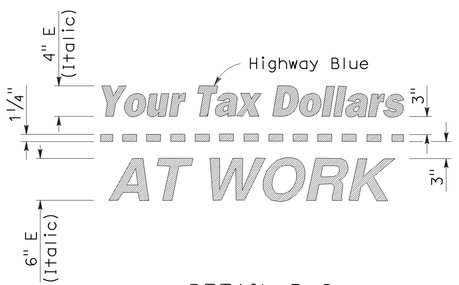

DETAIL B-2
(See Note 3)

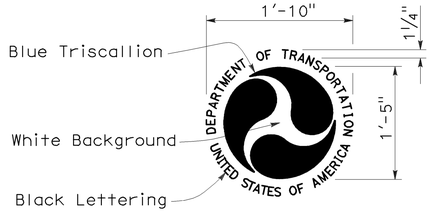

DETAIL D-2
(See Note 6)

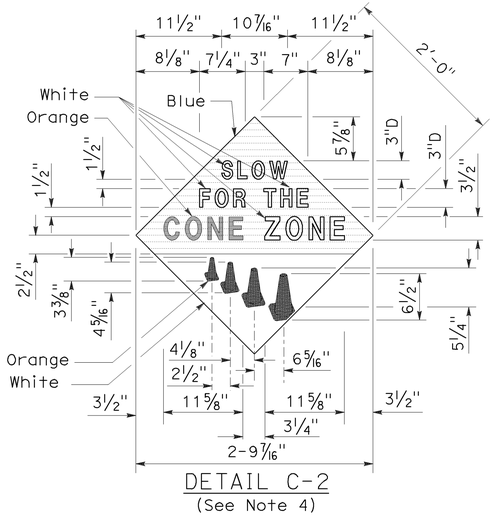

DETAIL C-2
(See Note 4)

STATE OF CALIFORNIA
DEPARTMENT OF TRANSPORTATION

CONSTRUCTION PROJECT FUNDING IDENTIFICATION SIGNS

NO SCALE

RSP T7 DATED NOVEMBER 17, 2006 SUPERSEDES STANDARD PLAN T7
DATED MAY 1, 2006 - PAGE 217 OF THE STANDARD PLANS BOOK DATED MAY 2006.

REVISED STANDARD PLAN RSP T7

DIST	COUNTY	ROUTE	POST MILES TOTAL PROJECT	SHEET NO.	TOTAL SHEETS
12	Ora	5	1.3/1.7	86	127

Greg W. Edwards
REGISTERED CIVIL ENGINEER

November 17, 2006
PLANS APPROVAL DATE

REGISTERED PROFESSIONAL ENGINEER — Greg W. Edwards — No. C36386 — Exp. 6-30-08 CIVIL — STATE OF CALIFORNIA

The State of California or its officers or agents shall not be responsible for the accuracy or completeness of electronic copies of this plan sheet.

To accompany plans dated 3-23-09

2006 REVISED STANDARD PLAN RSP T7

9-7-06

DIST	COUNTY	ROUTE	POST MILES TOTAL PROJECT	SHEET NO.	TOTAL SHEETS
12	Ora	5	1.3/1.7	87	127

Robert B Schott
LICENSED LANDSCAPE ARCHITECT

August 15, 2008
PLANS Approval DATE

LICENSED LANDSCAPE ARCHITECT — Robert B. Schott 3625 — Signature — 11-04-08 Renewal Date — 08-11-08 Date — STATE OF CALIFORNIA

The State of California or its officers or agents shall not be responsible for the accuracy or completeness of electronic copies of this plan sheet.

To accompany plans dated 3-23-09

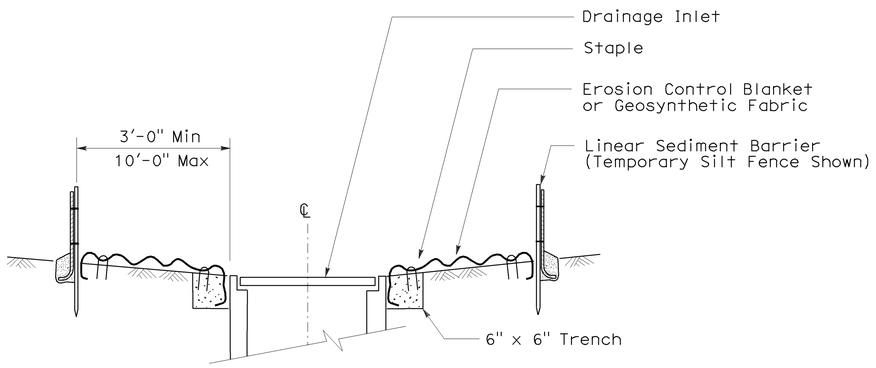

SECTION A-A

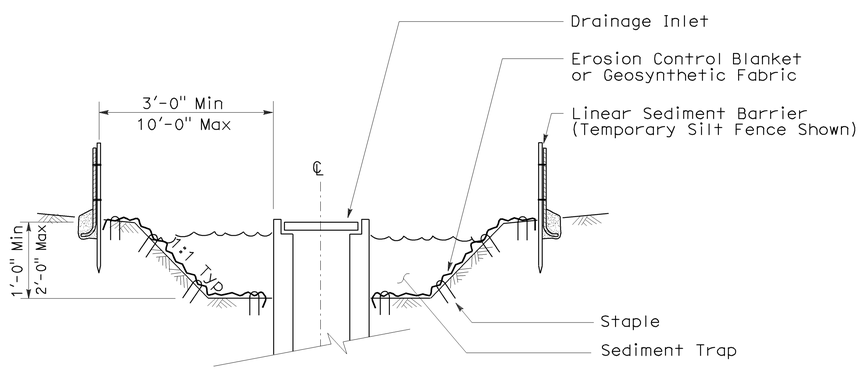

SECTION B-B

NOTES:

1. See Standard Plan T51 for Temporary Silt Fence.
2. Dimensions may vary to fit field conditions.

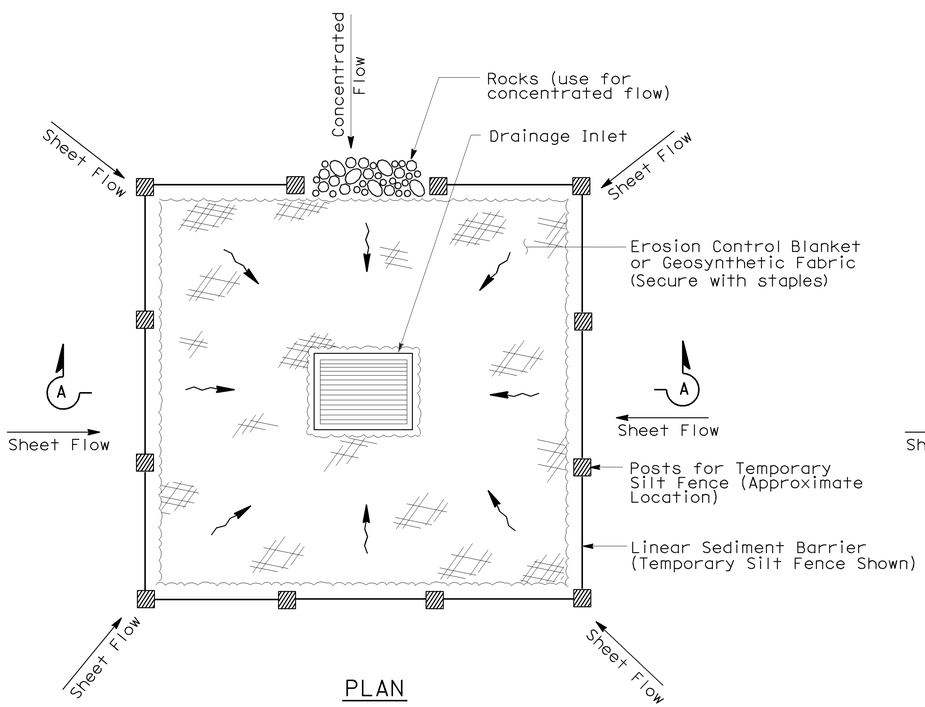

PLAN

TEMPORARY DRAINAGE INLET PROTECTION (TYPE 1)

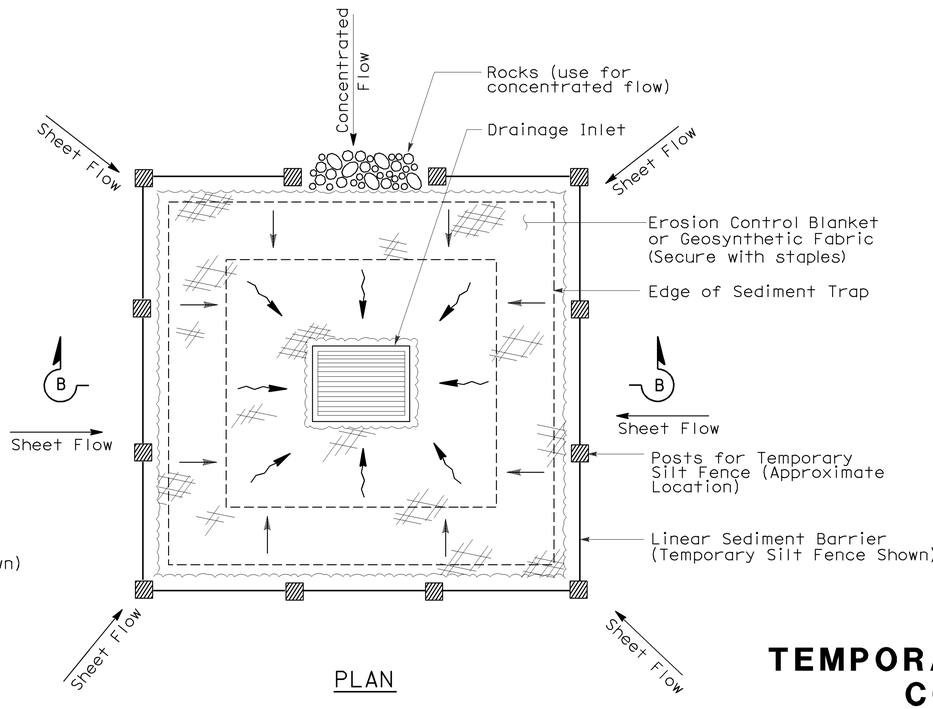

PLAN

TEMPORARY DRAINAGE INLET PROTECTION (TYPE 2) (EXCAVATED SEDIMENT TRAP)

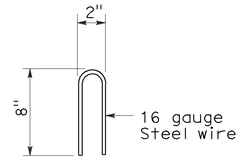

STAPLE DETAIL

STATE OF CALIFORNIA
DEPARTMENT OF TRANSPORTATION

TEMPORARY WATER POLLUTION CONTROL DETAILS (TEMPORARY DRAINAGE INLET PROTECTION)

NO SCALE

NSP T61 DATED AUGUST 15, 2008 SUPPLEMENTS THE STANDARD PLANS BOOK DATED MAY 2006.

NEW STANDARD PLAN NSP T61

2006 NEW STANDARD PLAN NSP T61

7-11-08

DIST	COUNTY	ROUTE	POST MILES TOTAL PROJECT	SHEET NO.	TOTAL SHEETS
12	Ora	5	1.3/1.7	88	127

Robert B Schott
LICENSED LANDSCAPE ARCHITECT

August 15, 2008
PLANS APPROVAL DATE

LICENSED LANDSCAPE ARCHITECT Robert B. Schott 3695 Signature 11-04-08 Renewal Date 08-11-08 Date STATE OF CALIFORNIA

The State of California or its officers or agents shall not be responsible for the accuracy or completeness of electronic copies of this plan sheet.

To accompany plans dated 3-23-09

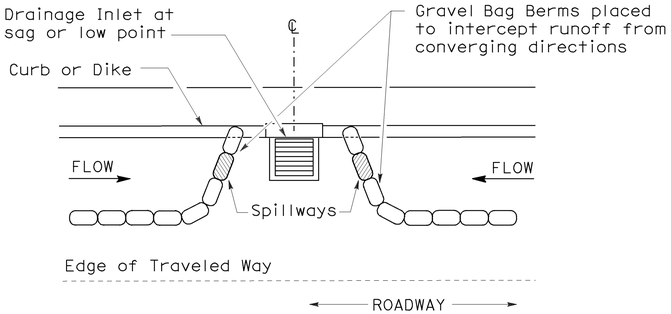

PLAN

CONFIGURATION FOR SAG POINT INLET (GRAVEL BAG BERM)

GRAVEL BAG BERM (TYPE 3A) SPACING TABLE

SLOPE OF ROADWAY (PERCENT)	1 to 3.9	4 to 5.9	6 to 7.9	8 to 10	10+
INTERVAL BETWEEN BERM	100′	75′	50′	25′	12′

For slope of less than 1%, install barriers only if erosion/sediment is prevalent

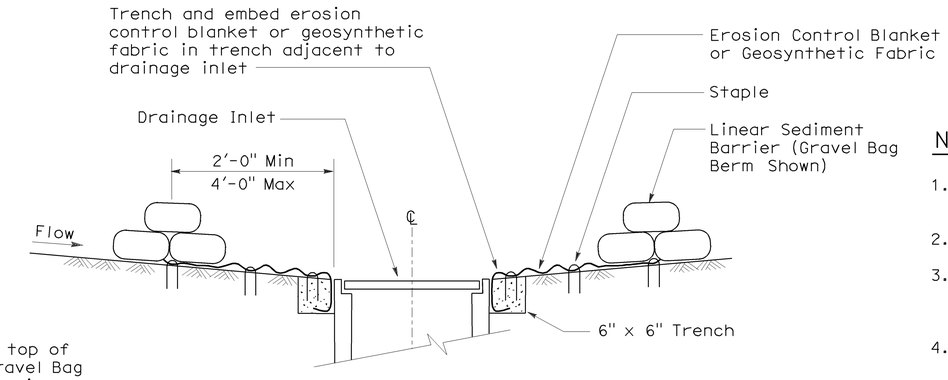

SECTION A-A

NOTES:

1. Place safety cones adjacent to drainage inlet protection.
2. Dimensions may vary to fit field conditions.
3. Install a minimum of 3 gravel bag berms upstream of each drainage inlet to be protected.
4. Position erosion control blanket or geosynthetic fabric at edge of concrete apron and secure in trench.
5. Erosion control blanket or geosynthetic fabric is not required if the area adjacent to the drainage inlet is vegetated or paved.

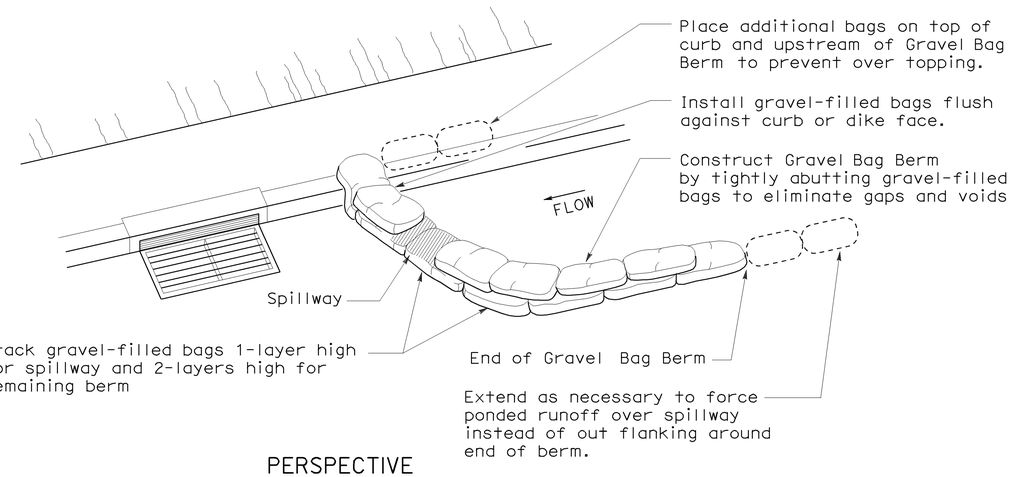

PERSPECTIVE

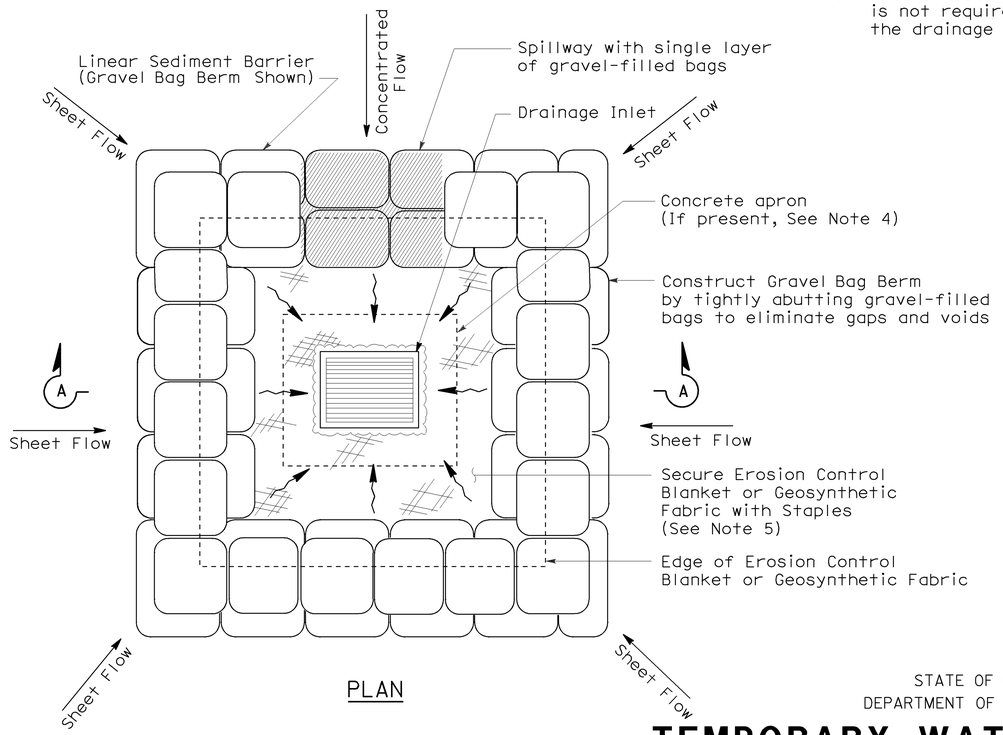

PLAN

TEMPORARY DRAINAGE INLET PROTECTION (TYPE 3B)

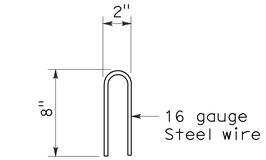

STAPLE DETAIL

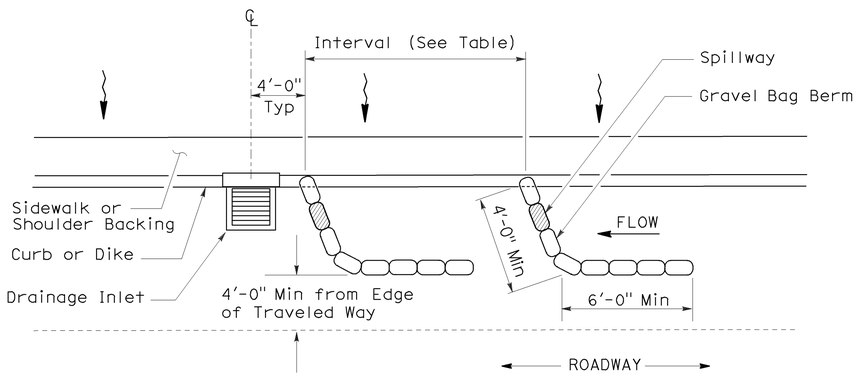

PLAN

TEMPORARY DRAINAGE INLET PROTECTION (TYPE 3A) (GRAVEL BAG BERM)

STATE OF CALIFORNIA
DEPARTMENT OF TRANSPORTATION

TEMPORARY WATER POLLUTION CONTROL DETAILS (TEMPORARY DRAINAGE INLET PROTECTION)

NO SCALE

NSP T62 DATED AUGUST 15, 2008 SUPPLEMENTS
THE STANDARD PLANS BOOK DATED MAY 2006.

NEW STANDARD PLAN NSP T62

2006 NEW STANDARD PLAN NSP T62

7-11-08

DIST	COUNTY	ROUTE	POST MILES TOTAL PROJECT	SHEET NO.	TOTAL SHEETS
12	Ora	5	1.3/1.7	89	127

Robert B Schott
LICENSED LANDSCAPE ARCHITECT

August 15, 2008
PLANS APPROVAL DATE

LICENSED LANDSCAPE ARCHITECT — Robert B. Schott 3825 — Signature — 11-04-08 Renewal Date — 08-11-08 Date — STATE OF CALIFORNIA

The State of California or its officers or agents shall not be responsible for the accuracy or completeness of electronic copies of this plan sheet.

To accompany plans dated 3-23-09

FLEXIBLE SEDIMENT BARRIER SPACING TABLE

SLOPE OF ROADWAY (PERCENT)	0 to 0.9	1 to 1.9	2 to 2.9	3 to 4	5+
INTERVAL BETWEEN BARRIERS	50′	35′	30′	25′	20′
ANGLE FROM FACE OF CURB	70°	70°	70°	45°	45°
SUGGESTED BARRIER LENGTH	6′	6′	6′	6′	6′

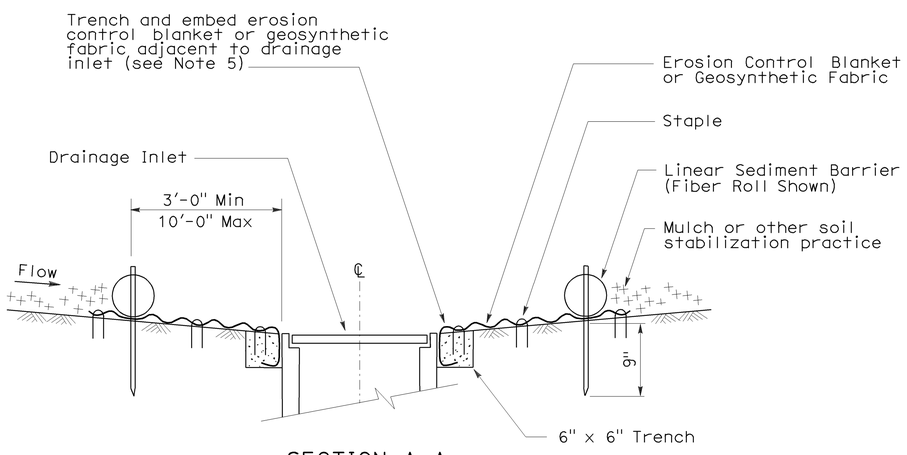

SECTION A-A

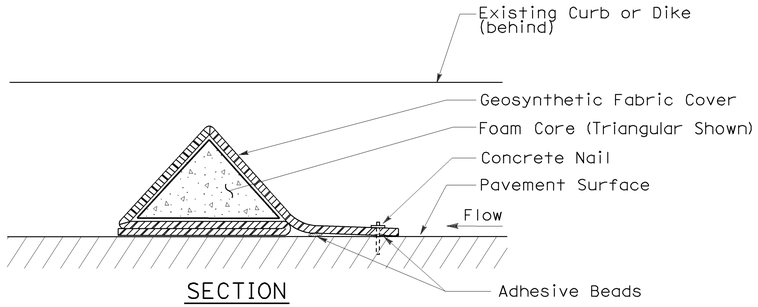

SECTION

FLEXIBLE SEDIMENT BARRIER DETAIL (FOAM BARRIER SHOWN)

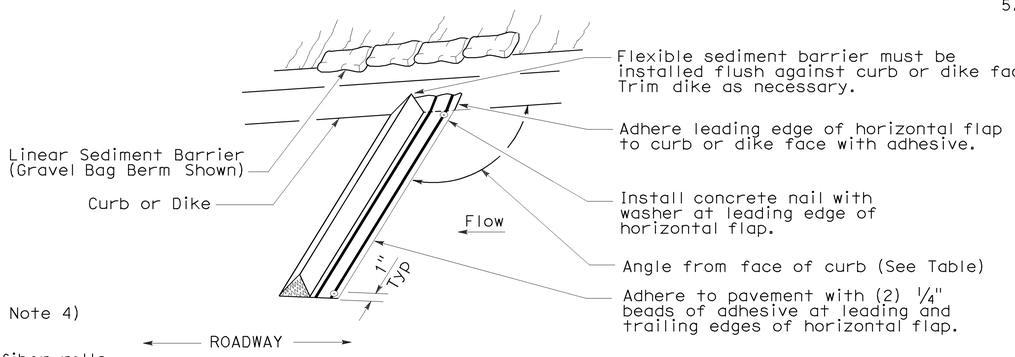

PERSPECTIVE

NOTES:

1. See Standard Plan T51 for Temporary Silt Fence.
2. Dimensions may vary to fit field conditions.
3. Install a minimum of 3 flexible sediment barriers upstream of each drainage inlet to be protected.
4. Position erosion control blanket or geosynthetic fabric at edge of concrete apron and secure in trench.
5. Erosion control blanket or geosynthetic fabric is not required if the area adjacent to the drainage inlet is vegetated.

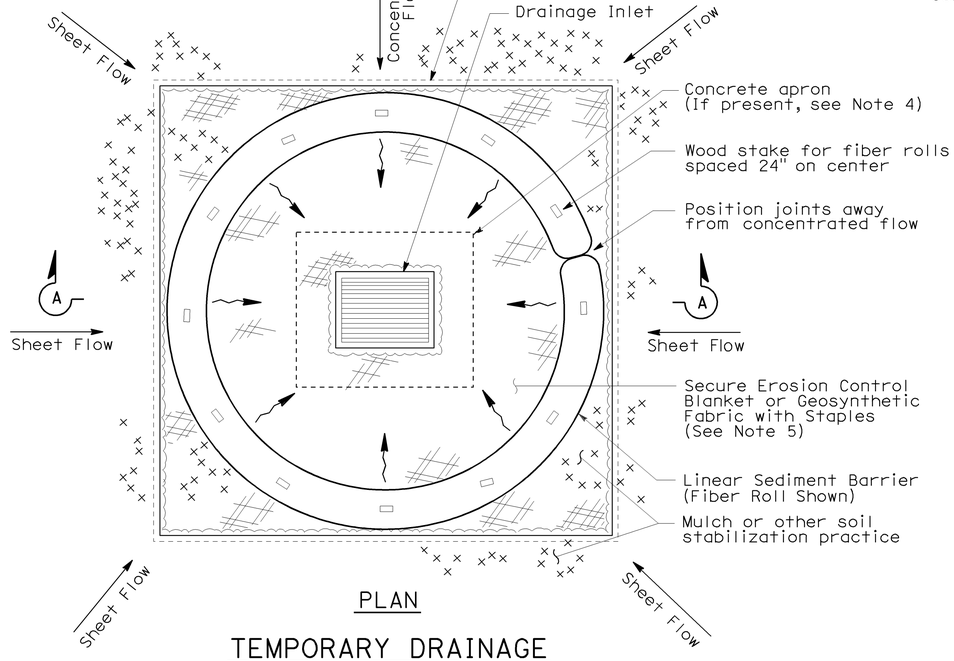

PLAN

TEMPORARY DRAINAGE INLET PROTECTION (TYPE 4A)

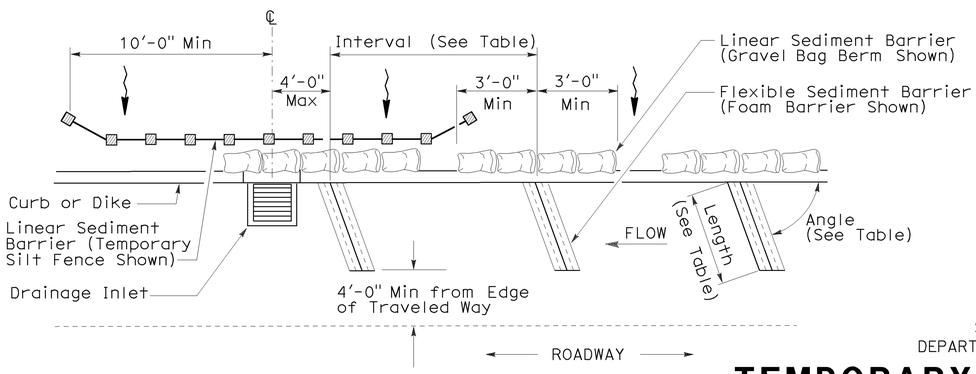

PLAN

TEMPORARY DRAINAGE INLET PROTECTION (TYPE 4B) FLEXIBLE SEDIMENT BARRIER

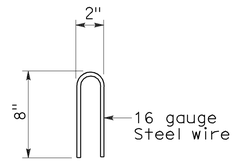

STAPLE DETAIL

STATE OF CALIFORNIA
DEPARTMENT OF TRANSPORTATION

TEMPORARY WATER POLLUTION CONTROL DETAILS (TEMPORARY DRAINAGE INLET PROTECTION)

NO SCALE

NSP T63 DATED AUGUST 15, 2008 SUPPLEMENTS THE STANDARD PLANS BOOK DATED MAY 2006.

NEW STANDARD PLAN NSP T63

2006 NEW STANDARD PLAN NSP T63

7-11-08

DIST	COUNTY	ROUTE	POST MILES TOTAL PROJECT	SHEET NO.	TOTAL SHEETS
12	Ora	5	1.3/1.7	90	127

Robert B Schott
LICENSED LANDSCAPE ARCHITECT

August 15, 2008
PLANS APPROVAL DATE

LICENSED LANDSCAPE ARCHITECT — Robert B. Schott 3835 — Signature — 11-04-08 Renewal Date — 08-11-08 Date — STATE OF CALIFORNIA

The State of California or its officers or agents shall not be responsible for the accuracy or completeness of electronic copies of this plan sheet.

To accompany plans dated 3-23-09

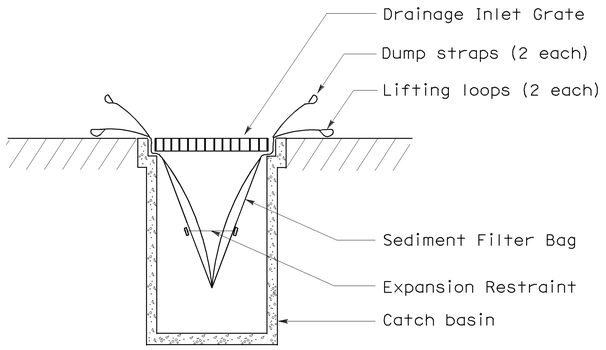

SECTION B-B

SEDIMENT FILTER BAG DETAIL

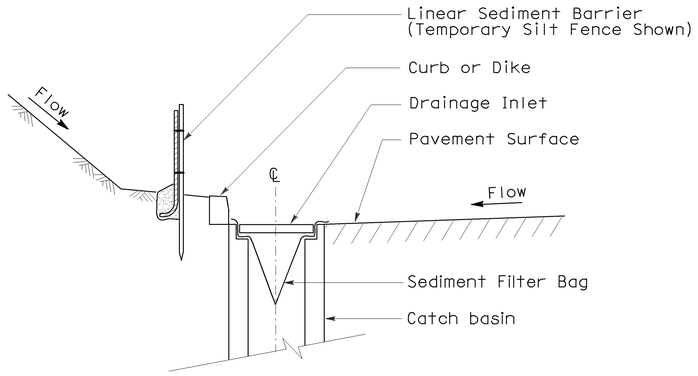

SECTION A-A

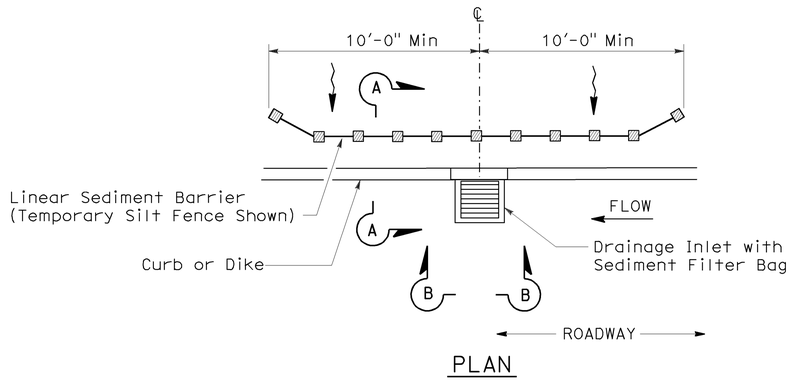

PLAN

TEMPORARY DRAINAGE INLET PROTECTION (TYPE 5) (SEDIMENT FILTER BAG)

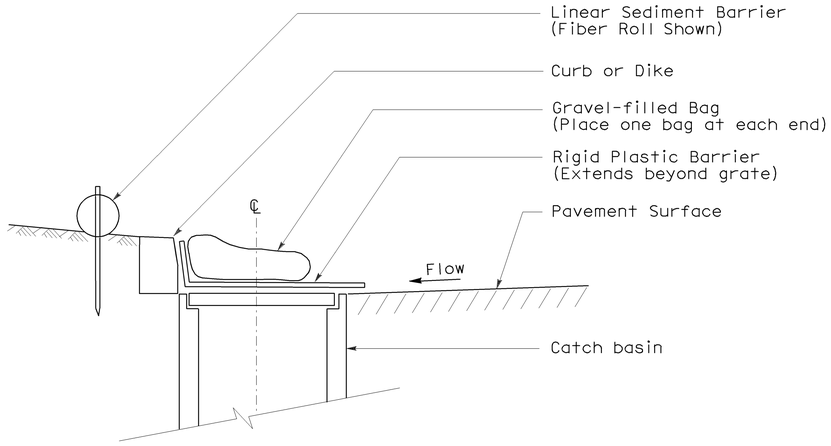

SECTION

TEMPORARY DRAINAGE INLET PROTECTION (TYPE 6A) (CATCH BASIN WITH GRATE)

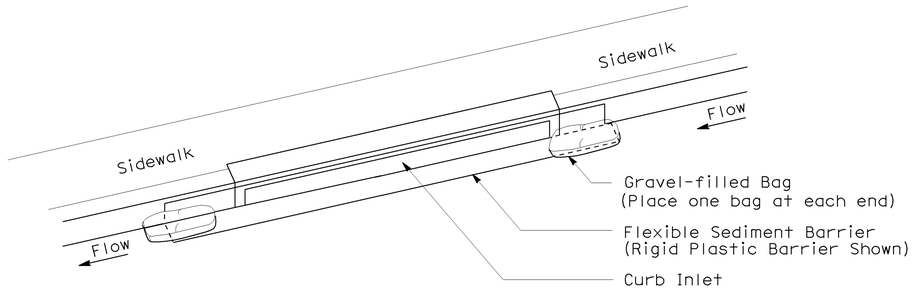

PERSPECTIVE

TEMPORARY DRAINAGE INLET PROTECTION (TYPE 6B) (CURB INLET WITHOUT GRATE)

NOTES:

1. See Standard Plan T51 for Temporary Silt Fence.
2. Dimensions may vary to fit field conditions.

STATE OF CALIFORNIA
DEPARTMENT OF TRANSPORTATION

TEMPORARY WATER POLLUTION CONTROL DETAILS (TEMPORARY DRAINAGE INLET PROTECTION)

NO SCALE

NSP T64 DATED AUGUST 15, 2008 SUPPLEMENTS THE STANDARD PLANS BOOK DATED MAY 2006.

NEW STANDARD PLAN NSP T64

2006 NEW STANDARD PLAN NSP T64

7-11-08

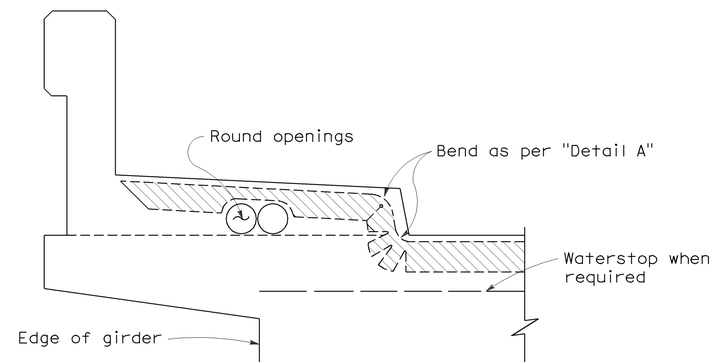

NOTE:

Type "B" seal shown. Type "A" seals to comform to the general path of seal shown, cuts for bending not required. Bend Type "A" seals 3" up into curb or barrier rail on only the low end of the seal.

CONCRETE BARRIER AND SIDEWALK

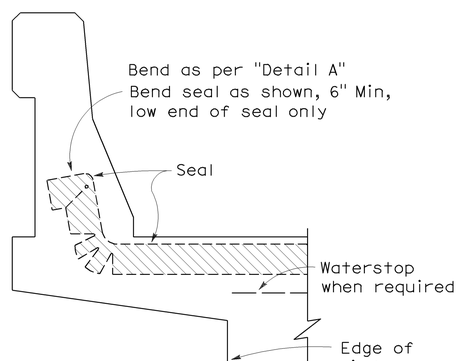

CONCRETE BARRIER

JOINT SEALS DETAILS

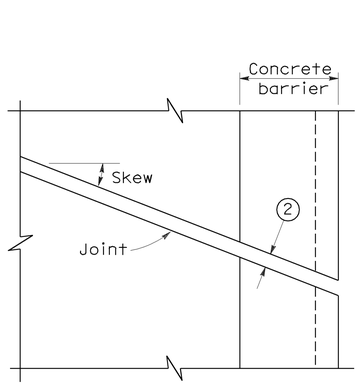

PLAN OF JOINT (SKEW ≤ 20°)

Min ℄ radius to be 4 times uncompressed width of seal or as recommended by the manufacturer, whichever is greater

In lieu of saw cutting, this area may be blocked out and reconstructed to match saw cutting on both sides.

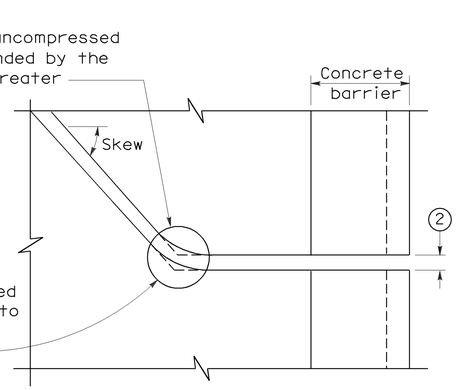

PLAN OF JOINT (SKEW > 20°)

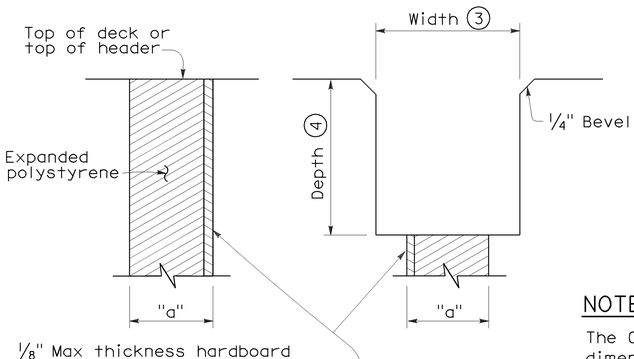

FORMING DETAIL

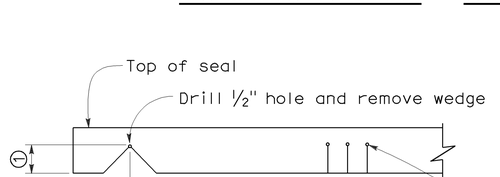

SAWCUT DETAIL

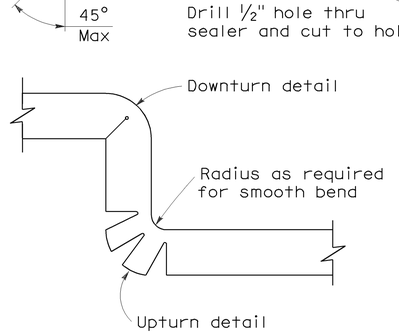

DETAIL A

NOTE:

The Contractor shall verify all controlling field dimensions before ordering or fabricatiing any material.

NOTES:

1. Make smooth cuts from the bottom of seal to 1½" clear of top leaving at least one complete cell between the top of the cut and top of the seal. When necessary cut back of seal to clear conduit and round openings.
2. Opening in barrier to match width of sawn deck joint.
3. Sawcut groove widths shall be as ordered by the Engineer.
4. Depth of sawcut: Type A - Depth to be 2" minimum.
   Type B - Depth to be equal to or greater than the depth of seal measured along the contact surface, when compressed to minimum width position (W_2) plus dimensions shown.
5. MR (movement rating) as shown on other plan sheets.
6. Other depths must be approved by the Engineer.

DIMENSIONS "a" OF JOINT REQUIRED

Movement Rating (MR) (5)	Bridge Type	"a" Dimension Deck Concrete Placed		
		Winter	Fall-Spring	Summer
2"	All except CIP/PS	1½"	1¼"	¾"
	CIP/PS	1¼"	1"	½"
1½"	All except CIP/PS	1¼"	1"	½"
	CIP/PS	1"	¾"	½"
1"	All except CIP/PS	1"	¾"	½"
	CIP/PS	¾"	½"	½"
½"	All except CIP/PS	¾"	¾"	½"
	CIP/PS	½"	½"	½"

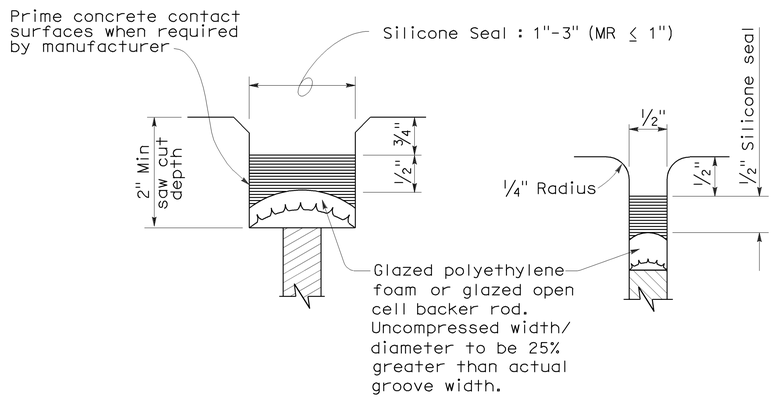

TYPE A SEAL

Movement rating : Silicone = 1" Max

TYPE AL SEAL

Longitudinal joints only

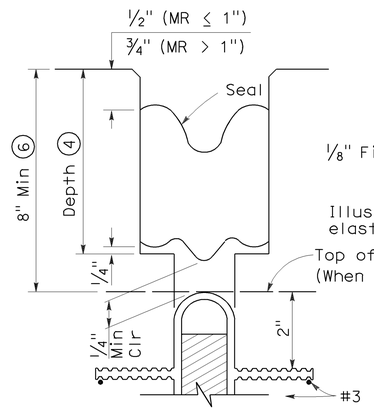

TYPE B JOINT SEAL
IN MINIMUM WIDTH POSITION (W_2)

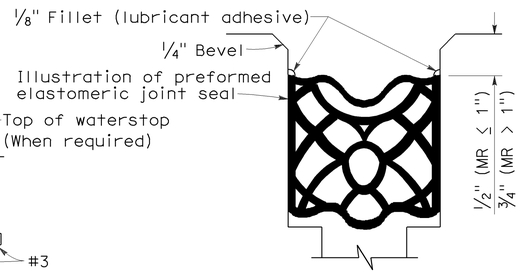

TYPE B SEAL

Movement Rating ≤ 2"

DIST	COUNTY	ROUTE	POST MILES TOTAL PROJECT	SHEET NO.	TOTAL SHEETS
12	Ora	5	1.3/1.7	91	127

REGISTERED CIVIL ENGINEER

Efthymios Delis
No. C51434
Exp. 6-30-08
CIVIL
REGISTERED PROFESSIONAL ENGINEER
STATE OF CALIFORNIA

October 5, 2007
PLANS APPROVAL DATE

The State of California or its officers or agents shall not be responsible for the accuracy or completeness of electronic copies of this plan sheet.

To accompany plans dated 3-23-09

STATE OF CALIFORNIA
DEPARTMENT OF TRANSPORTATION

JOINT SEALS (MAXIMUM MOVEMENT RATING = 2")

NO SCALE

RSP B6-21 DATED OCTOBER 5, 2007 SUPERSEDES STANDARD PLAN B6-21 DATED MAY 1, 2006 - PAGE 258 OF THE STANDARD PLANS BOOK DATED MAY 2006.

REVISED STANDARD PLAN RSP B6-21

2006 REVISED STANDARD PLAN RSP B6-21

5-8-07

DIST	COUNTY	ROUTE	POST MILES TOTAL PROJECT	SHEET NO.	TOTAL SHEETS
12	Ora	5	1.3/1.7	92	127

Douglas J. Dunrud
REGISTERED CIVIL ENGINEER

October 5, 2007
PLANS APPROVAL DATE

REGISTERED PROFESSIONAL ENGINEER — Douglas J. Dunrud, No. C47240, Exp. 12-31-07 CIVIL, STATE OF CALIFORNIA

The State of California or its officers or agents shall not be responsible for the accuracy or completeness of electronic copies of this plan sheet.

To accompany plans dated 3-23-09

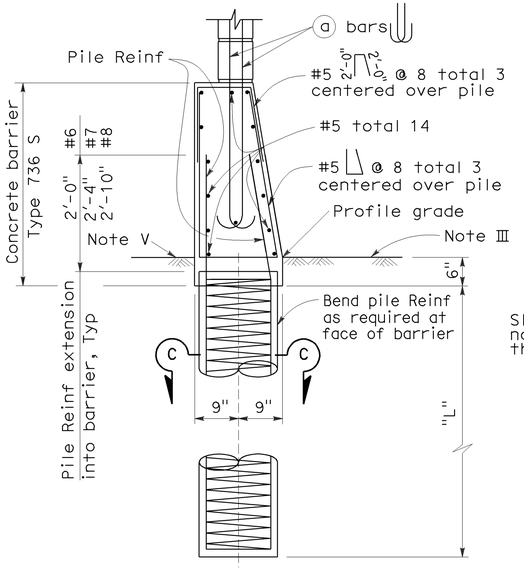

CASE 1

For details not shown, See Case 2.
Level ground ±10% on both sides of barrier.

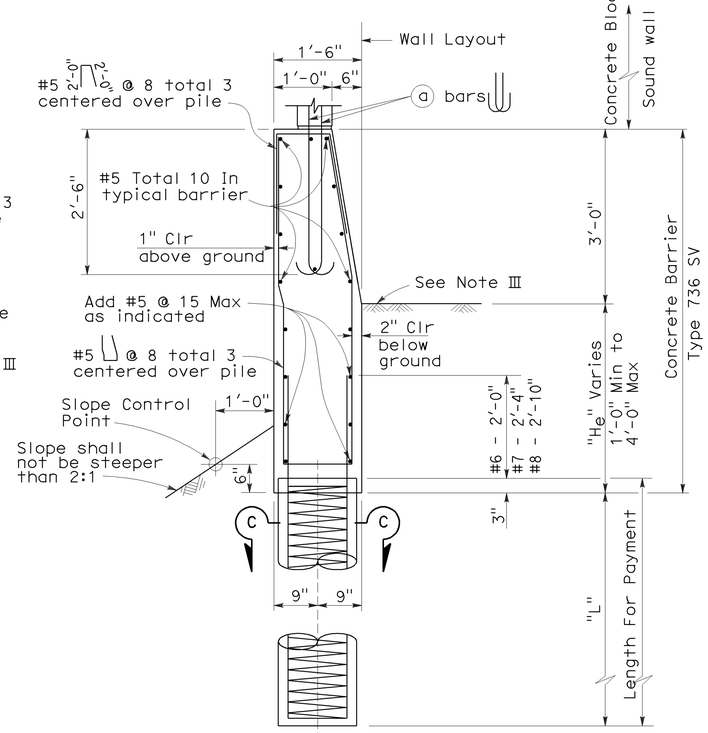

CASE 2

For details not shown, See Case 1.
Level ground ±10% at the traffic side of barrier and sloping ground on the opposite side.

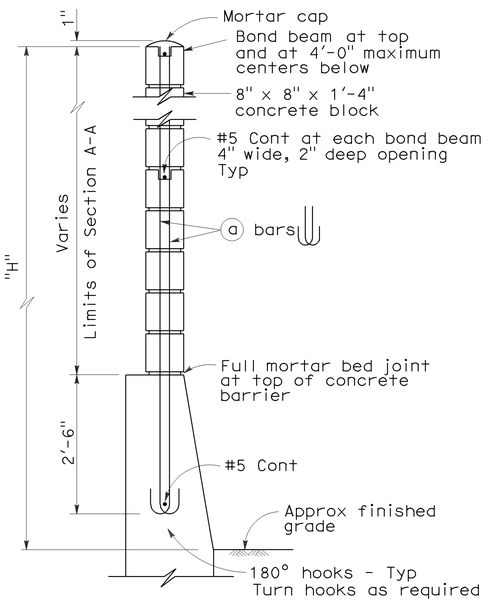

H=6'-4" THRU H=10'-4"

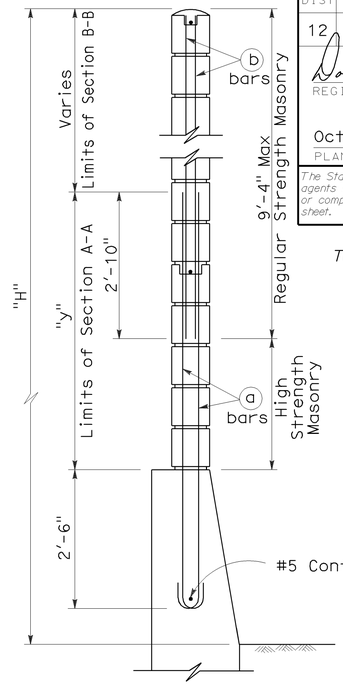

H=12'-4" THRU H=16'-4"

For details not shown, see H=6'-4" thru H=10'-4".

TYPICAL SECTIONS

See Revised Standard Plan RSP B15-8 for pile details.

SOUND WALL REINFORCEMENT TABLE

Maximum H	ⓐ bars @ 1'-4" Max	ⓑ bars @ 1'-4" Max	"y"	f'm (psi)	Compressive Strength of CMU (psi)	H
6'-4"	#4	---	---	1500	1900	6'-4"
8'-4"	#4	---	---	1500	1900	8'-4"
10'-4"	#4	---	---	1500	1900	10'-4"
12'-4"	#5	#4	5'-0"	1500	1900	12'-4"
14'-4"	#6	#4	7'-0"	1500	1900	14'-4"
16'-4"	#6	#4	9'-0"	2500	3750	16'-4"

NOTES I THROUGH VI:

I. Details shown are primarily to conform design of sound walls to Type 736S and Type 736 SV Concrete Barriers. For sound wall details conforming with barriers see Standard Plan B15-7 and Revised Standard Plan RSP B15-8.

II. For details and sections not shown, see Standard Plan B15-7 and Revised Standard Plan RSP B15-8.

III. Slope ground at traffic side of barrier to drain. Maximum slope ±10%. See Std Plan B11-56, Note D.

IV. Pile spacing may be varied, but shall not exceed the tabular values. See Revised Standard Plan RSP B15-8.

V. For Case 1 - ground line to be at the same elevation on both sides of the barrier. Barrier shall not be used to retain earth.

VI. See Standard Plan B15-9 for other details.

NOTES A THROUGH G:

A. For type of block, type of block bond, and joint finish, see other sheets.

B. When blocks are laid in stacked bond, ladder type, galvanized joint reinforcement shall be provided. A minimum of 2-9 gauge wires continuous at 4'-0" maximum to be used. Locate reinforcement in joints that are at the approximate midpoint between bond beams.

C. Horizontal joints shall be tooled concave or may be weathered. Vertical joints shall be tooled concave or may be raked.

D. For intermediate wall heights (H), or barrier depths (H_e), that are between the values given, use the tabular information for the next higher (H) or (H_e).

E. Class 2 concrete to be used for the barrier.

F. Masonry strengths are listed in the "SOUND WALL REINFORCEMENT TABLE".

BARRIER SECTIONS

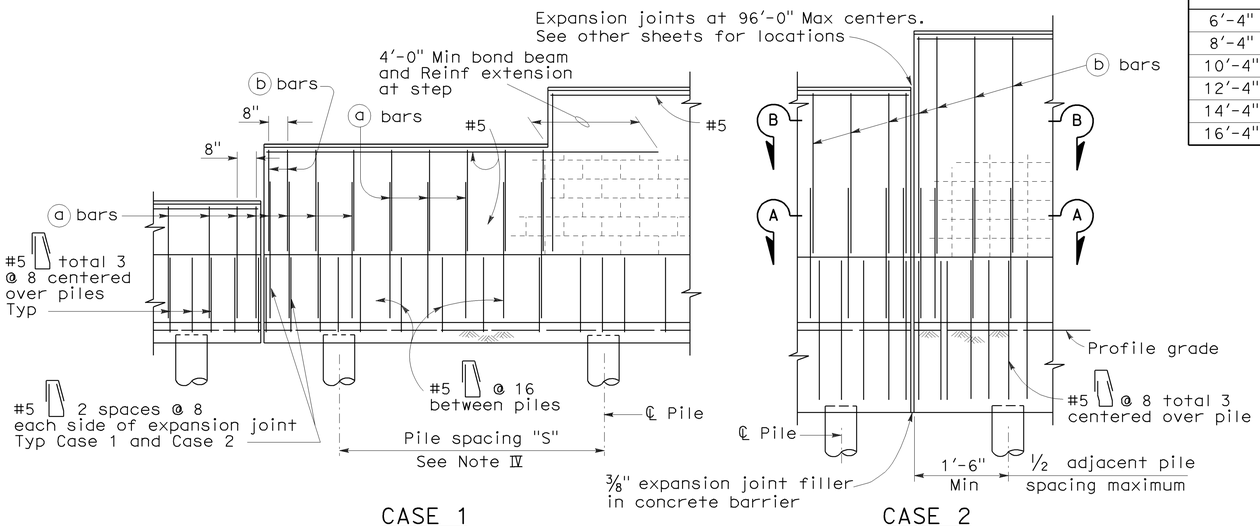

CASE 1

For details not shown, See Case 2.

CASE 2

For details not shown, See Case 1.

PARTIAL ELEVATIONS

STATE OF CALIFORNIA
DEPARTMENT OF TRANSPORTATION

SOUND WALL MASONRY BLOCK ON TYPE 736S/SV BARRIER DETAILS (1)

NO SCALE

RSP B15-6 DATED OCTOBER 5, 2007 SUPERSEDES STANDARD PLAN B15-6 DATED MAY 1, 2006 - PAGE 296 OF THE STANDARD PLANS BOOK DATED MAY 2006.

REVISED STANDARD PLAN RSP B15-6

2006 REVISED STANDARD PLAN RSP B15-6

7-5-07

DIST	COUNTY	ROUTE	POST MILES TOTAL PROJECT	SHEET NO.	TOTAL SHEETS
12	Ora	5	1.3/1.7	93	127

REGISTERED CIVIL ENGINEER

June 6, 2008
PLANS APPROVAL DATE

REGISTERED PROFESSIONAL ENGINEER
Tillat Satter
No. C42892
Exp. 03-31-10
CIVIL
STATE OF CALIFORNIA

The State of California or its officers or agents shall not be responsible for the accuracy or completeness of electronic copies of this plan sheet.

To accompany plans dated 3-23-09

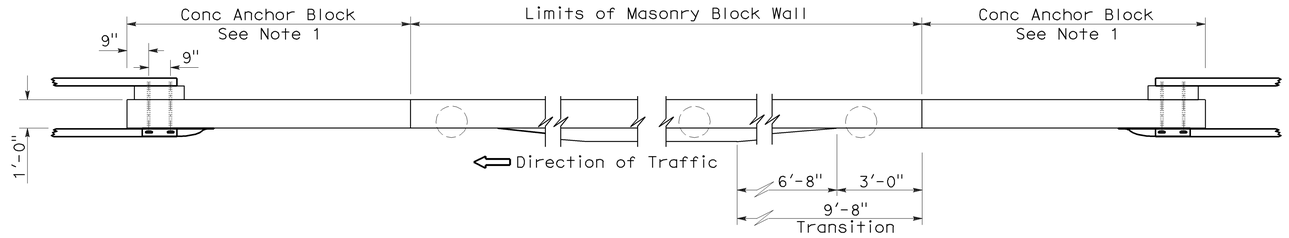

PLAN

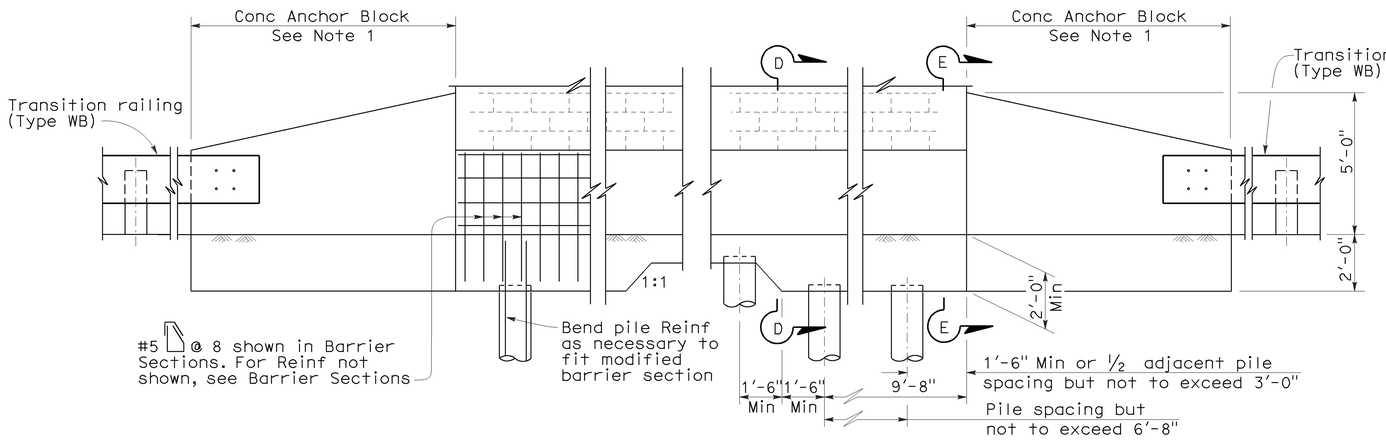

ELEVATION

METAL BEAM GUARDRAIL ANCHORAGE

For details not shown, see Standard Plan B11-56.

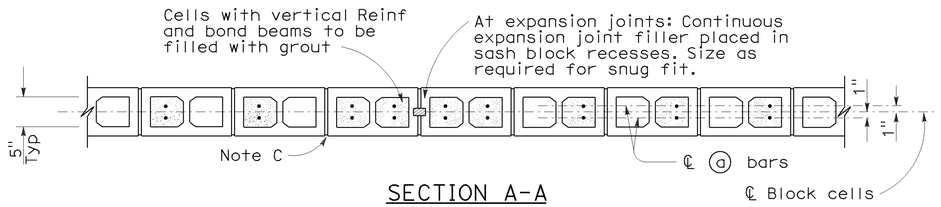

SECTION A-A

For details not shown, see other details.

H=6'-4" THRU H=10-4"

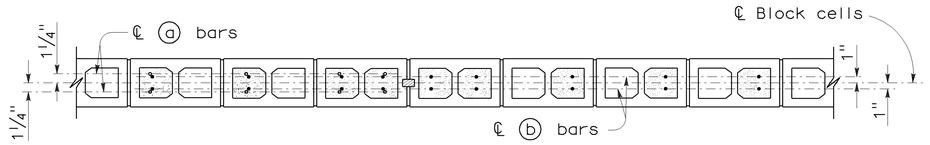

SECTION A-A SECTION B-B

For details not shown, see other details.

H=12'-4" THRU H=16'-4"

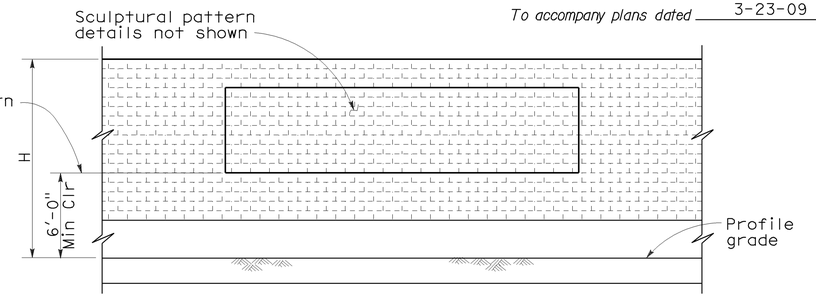

CLEARANCE DETAIL

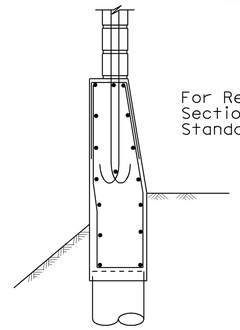

SECTION D-D

For Reinf, see "Barrier Sections Case 2" on Standard plan B15-6

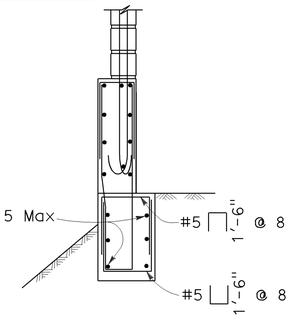

SECTION E-E

DESIGN NOTES:

DESIGN

Uniform Building Code, 1997 Edition
and the Bridge Design Specifications.

DESIGN WIND LOAD

27 psf

DESIGN SEISMIC LOAD

0.57 Dead load

REINFORCED CONCRETE

f'c = 3.6 ksi
fy = 60 ksi

CONCRETE MASONRY

REGULAR STRENGTH	HIGH STRENGTH	
f'm = 1500 psi	f'm = 2000 psi	f'm = 2500 psi
fb = 495 psi	fb = 660 psi	fb = 830 psi
fs = 24,000 psi	fs = 24,000 psi	fs = 24,000 psi
n = 25.8	n = 19.3	n = 15.5

NOTE:

1. For Concrete Anchor Block and connection details, see "Connection Detail DD" on Standard Plan A77J3.

STATE OF CALIFORNIA
DEPARTMENT OF TRANSPORTATION

SOUND WALL MASONRY BLOCK ON TYPE 736S/SV BARRIER DETAILS (2)

NO SCALE

RSP B15-7 DATED JUNE 6, 2008 SUPERSEDES STANDARD PLAN B15-7
DATED MAY 1, 2006 - PAGE 297 OF THE STANDARD PLANS BOOK DATED MAY 2006.

REVISED STANDARD PLAN RSP B15-7

2006 REVISED STANDARD PLAN RSP B15-7

4-23-08

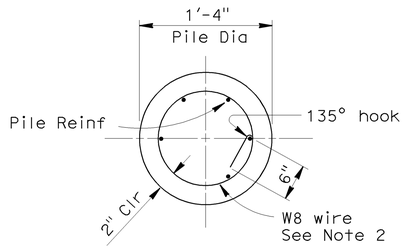

SECTION C-C

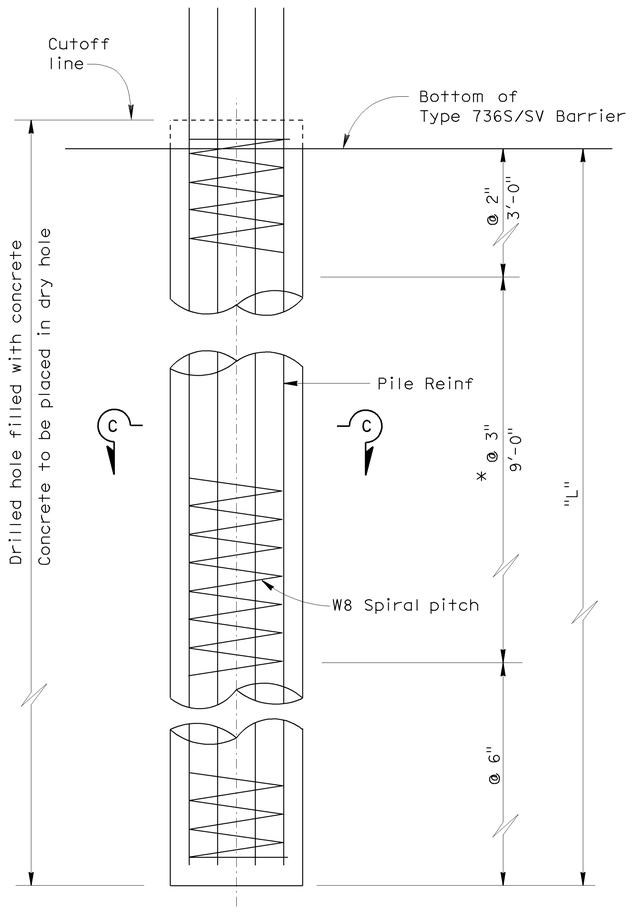

ELEVATION

* @ 2" at option of Contractor.

CASE 1: PILE DATA TABLE

Maximum H	ø = 25 Min S	L	Pile Reinf	ø = 30 Min S	L	Pile Reinf	ø = 35 Min S	L	Pile Reinf	Maximum H
6'-4"	10'-0"	8'-6"	#6 Tol 6	10'-0"	7'-0"	#6 Tol 6	10'-0"	6'-0"	#6 Tol 6	6'-4"
8'-4"	10'-0"	9'-6"	#6 Tol 6	10'-0"	8'-0"	#6 Tol 6	10'-0"	7'-0"	#6 Tol 6	8'-4"
10'-4"	10'-0"	10'-6"	#6 Tol 6	10'-0"	9'-0"	#6 Tol 6	10'-0"	7'-6"	#6 Tol 6	10'-4"
12'-4"	10'-0"	11'-6"	#7 Tol 6	10'-0"	9'-6"	#7 Tol 6	10'-0"	8'-6"	#6 Tol 6	12'-4"
14'-4"	10'-0"	12'-6"	#7 Tol 7	10'-0"	10'-6"	#7 Tol 7	10'-0"	9'-0"	#7 Tol 7	14'-4"
16'-4"	10'-0"	13'-0"	#8 Tol 7	10'-0"	11'-6"	#8 Tol 7	10'-0"	9'-6"	#7 Tol 7	16'-4"

CASE 2: PILE DATA TABLE

H_e	Maximum H	ø = 30 Min S	L	Pile Reinf	ø = 35 Min S	L	Pile Reinf	Maximum H
1'-0"	6'-4"	10'-0"	15'-0"	#7 Tol 6	10'-0"	12'-0"	#6 Tol 6	6'-4"
	8'-4"	9'-9"	16'-0'	#7 Tol 6	10'-0"	13'-0"	#7 Tol 6	8'-4"
	10'-4"	8'-0"	16'-0"	#7 Tol 6	10'-0"	14'-0"	#7 Tol 6	10'-4"
	12'-4"	6'-9"	16'-0"	#7 Tol 6	10'-0"	15'-0"	#8 Tol 7	12'-4"
	14'-4"	5'-9"	16'-0"	#7 Tol 6	9'-6"	15'-6'	#8 Tol 7	14'-4"
	16'-4"	5'-0"	16'-0"	#7 Tol 6	8'-9"	16'-0"	#8 Tol 7	16'-4"
2'-0"	6'-4"	8'-3"	16'-0"	#7 Tol 6	10'-0"	13'-6"	#7 Tol 6	6'-4"
	8'-4"	7'-0"	16'-0"	#7 Tol 6	10'-0"	14'-6"	#7 Tol 7	8'-4"
	10'-4"	6'-0"	16'-0"	#7 Tol 6	10'-0"	15'-3'	#8 Tol 7	10'-4"
	12'-4"	5'-3"	16'-0"	#7 Tol 6	9'-9"	16'-0"	#8 Tol 7	12'-4"
	14'-4"	4'-6"	16'-0"	#7 Tol 6	8'-4"	16'-0"	#8 Tol 7	14'-4"
	16'-4"	4'-0"	16'-0"	#7 Tol 6	7'-4"	16'-0"	#8 Tol 7	16'-4"
3'-0"	6'-4"	6'-0"	16'-0"	#7 Tol 6	10'-0"	15'-3"	#8 Tol 7	6'-4"
	8'-4"	5'-3"	16'-0"	#7 Tol 6	10'-0"	16'-0"	#8 Tol 7	8'-4"
	10'-4"	4'-6"	16'-0"	#7 Tol 6	8'-10"	16'-0"	#8 Tol 7	10'-4"
	12'-4"	4'-0"	16'-0"	#7 Tol 6	7'-10"	16'-0"	#8 Tol 7	12'-4"
	14'-4"	3'-6'	16'-0"	#7 Tol 6	6'-10"	16'-0"	#8 Tol 7	14'-4"
	16'-4"	3'-3"	16'-0"	#7 Tol 6	6'-2"	16'-0"	#8 Tol 7	16'-4"
4'-0"	6'-4"	4'-3"	16'-0"	#7 Tol 6	8'-0"	15'-6"	#8 Tol 7	6'-4"
	8'-4"	3'-10"	16'-0"	#7 Tol 6	7'-4"	15'-9"	#8 Tol 7	8'-4"
	10'-4"	3'-6"	16'-0"	#7 Tol 6	6'-10"	16'-0"	#8 Tol 7	10'-4"
	12'-4"	3'-2"	16'-0"	#7 Tol 6	6'-3"	16'-0"	#8 Tol 7	12'-4"
	14'-4"	3'-0"	16'-3"	#7 Tol 6	5'-8"	16'-0"	#8 Tol 7	14'-4"
	16'-4"	2'-10"	16'-6"	#7 Tol 6	5'-0"	16'-0"	#8 Tol 7	16'-4"

NOTES:

1. For details not shown, see Revised Standard Plan RSP B15-6 and Standard Plan B15-7.
2. Lapped splices in spiral reinforcement shall be lapped at least 80 wire diameters. Spiral reinforcement at splices and at ends shall be terminated with a 135° hook with a 6" tail hooked around a longitudinal bar.

DIST	COUNTY	ROUTE	POST MILES TOTAL PROJECT	SHEET NO.	TOTAL SHEETS
12	Ora	5	1.3/1.7	94	127

Douglas J. Dunrud
REGISTERED CIVIL ENGINEER

October 5, 2007
PLANS APPROVAL DATE

REGISTERED PROFESSIONAL ENGINEER
Douglas J. Dunrud
No. C47240
Exp. 12-31-07
CIVIL
STATE OF CALIFORNIA

The State of California or its officers or agents shall not be responsible for the accuracy or completeness of electronic copies of this plan sheet.

To accompany plans dated 3-23-09

2006 REVISED STANDARD PLAN RSP B15-8

STATE OF CALIFORNIA
DEPARTMENT OF TRANSPORTATION

SOUND WALL MASONRY BLOCK ON TYPE 736S/SV BARRIER DETAILS (3)

NO SCALE

RSP B15-8 DATED OCTOBER 5, 2007 SUPERSEDES STANDARD PLAN B15-8
DATED MAY 1, 2006 - PAGE 298 OF THE STANDARD PLANS BOOK DATED MAY 2006.

REVISED STANDARD PLAN RSP B15-8

7-6-07

DIST	COUNTY	ROUTE	POST MILES TOTAL PROJECT	SHEET NO.	TOTAL SHEETS
12	Ora	5	1.3/1.7	95	127

Jeffery G. McRae
REGISTERED ELECTRICAL ENGINEER

October 5, 2007
PLANS APPROVAL DATE

REGISTERED PROFESSIONAL ENGINEER — Jeffery G. McRae — No. E14512 — Exp. 6-30-08 — ELECTRICAL — STATE OF CALIFORNIA

The State of California or its officers or agents shall not be responsible for the accuracy or completeness of electronic copies of this plan sheet.

To accompany plans dated 3-23-09

ELECTROLIERS

STANDARD TYPES
15, 15D
15 STRUCTURE
21, 21D STRUCTURE
30
31
32
35
36-20A

High mast light pole

Double Arm lighting standard

Existing electrolier

Electrolier foundation (Future installation)

NOTES:

1. Luminaires shall be 310 W HPS when installed on Type 21, 21D, 30, 31, 32, 35 and 36-20A Standards, unless otherwise specified. Luminaires shall be 200 W HPS when installed on other type standards or poles, unless otherwise specified.
2. Luminaires shall be the cutoff type, ANSI Type III medium cutoff lighting distribution, unless otherwise specified.
3. Variations noted adjacent to symbol on project plans.

Electrolier (see project notes or project plans)

Luminaire on wood pole

STANDARD NOTES:

- AB — Abandon. If applied to conduit, remove conductors.
- BC — Install pull box in existing conduit run.
- BP — Pedestrian barricade, type as indicated on plan.
- CB — Install conduit into existing pull box.
- CC — Connect new and existing conduit. Remove existing conductors and install conductors as indicated.
- CF — Conduit to remain for future use. Remove conductors. Install pull wire or rope.
- DH — Detector handhole.
- FA — Foundation to be abandoned.
- IS — Install sign on signal mast arm.
- NS — No slip base on standard.
- PEC — Photoelectric control.
- PEU — Photoelectric unit.
- RC — Equipment or material to be removed and become the property of the Contractor.
- RE — Remove electrolier, fuses and ballast. Tape ends of conductors.
- RL — Relocate equipment.
- RR — Remove and reuse equipment.
- RS — Remove and salvage equipment.
- SC — Splice new to existing conductors.
- SD — Service disconnect.
- SF — Standard to remain for future use. Remove luminaire, pole conductors, fuses and ballast.
- TSP — Telephone service point.

ABBREVIATIONS AND EQUIPMENT DESIGNATIONS

PROPOSED	EXISTING	
BBS	bbs	Battery backup system
BC	bc	Bolt circle
C	C	Conduit
CCTV	cctv	Closed circuit television
CKT	ckt	Circuit
CMS	cms	Changeable message sign
DLC	dlc	Loop detector lead-in cable
EMS	ems	Extinguishable message sign
EVC	evc	Emergency vehicle cable
EVD	evd	Emergency vehicle detector
FB	fb	Flashing beacon
FBCA	fbca	Flashing beacon control assembly
FBS	fbs	Flashing beacon with slip base
FO	fo	Fiber optic
G	G	Ground (Equipment Grounding Conductor)
GFCI	GFCI	Ground fault circuit interrupt
HAR	har	Highway advisory radio
HEX	hex	Hexagonal
HPS	hps	High pressure sodium
IISNS	iisns	Internally illuminated street name sign
ISL	isl	Induction sign lighting
LED	led	Light emitting diode
LMA	lma	Luminaire mast arm
LPS	lps	Low pressure sodium
LTG	ltg	Lighting
LUM	lum	Luminaire
MAT	mat	Mast arm mounting vehicle signal faces, top attachment
MAS	mas	Mast arm mounting vehicle signal faces, side attachment
MAS-4A	mas-4A	Mast arm mounting vehicle signal faces,
MAS-4B	mas-4B	side attachment - 4 signal section
MAS-4C	mas-4C	
MAS-5A	mas-5A	Mast arm mounting vehicle signal faces,
MAS-5B	mas-5B	side attachment - 5 signal section
MC	mc	Mercury contactor
M/M	m/m	Multiple to multiple transformer
MT	mt	Conduit with pull wire or rope only
MTG	mtg	Mounting
	mv	Mercury vapor lighting fixture
N	N	Neutral (Grounded Conductor)
NC	NC	Normally closed
NO	NO	Normally open
PB	pb	Pull box
PEC	pec	Photoelectric control (Type I, II, III, IV or V as shown)
PED	ped	Pedestrian
PEU	peu	Photoelectric unit
PPB	ppb	Pedestrian push button
RL		Relocated equipment
RM	rm	Ramp metering
SB	sb	Slip base
SIC	sic	Signal interconnect cable
SIG	sig	Signal
SMA	sma	Signal mast arm
SNS	sns	Street name sign
SP	sp	Service point
TDC	tdc	Telephone demarcation cabinet
TMS	tms	Traffic monitoring station
TOS	tos	Traffic Operations System
VEH	veh	Vehicle
XFMR	xfmr	Transformer
COMM	comm	Communication
RWIS	rwis	Roadway weather information system

SOFFIT AND WALL MOUNTED LUMINAIRES

- Pendant, 70 W HPS unless otherwise specified.
- Flush, 70 W HPS unless otherwise specified.
- Wall surface, 70 W HPS unless otherwise specified.
- Existing soffit or wall luminaire to remain unmodified.
- (M) Existing soffit or wall luminaire to be modified as specified.

NOTE:
Arrow indicates "street side" of luminaire.

STATE OF CALIFORNIA
DEPARTMENT OF TRANSPORTATION

ELECTRICAL SYSTEMS (SYMBOLS AND ABBREVIATIONS)

NO SCALE

RSP ES-1A DATED OCTOBER 5, 2007 SUPERSEDES STANDARD PLAN ES-1A
DATED MAY 1, 2006 - PAGE 400 OF THE STANDARD PLANS BOOK DATED MAY 2006.

REVISED STANDARD PLAN RSP ES-1A

2006 REVISED STANDARD PLAN RSP ES-1A

7-10-07

DIST	COUNTY	ROUTE	POST MILES TOTAL PROJECT	SHEET NO.	TOTAL SHEETS
12	Ora	5	1.3/1.7	96	127

Jeffery G. McRae
REGISTERED ELECTRICAL ENGINEER

October 5, 2007
PLANS APPROVAL DATE

REGISTERED PROFESSIONAL ENGINEER — Jeffery G. McRae — No. E14512 — Exp. 6-30-08 ELECTRICAL — STATE OF CALIFORNIA

The State of California or its officers or agents shall not be responsible for the accuracy or completeness of electronic copies of this plan sheet.

To accompany plans dated 3-23-09

CONDUIT

PROPOSED	EXISTING	
— — —	— — —	Lighting Conduit, unless otherwise indicated or noted
— - — - —	— - — - —	Traffic signal conduit
—C— —	—c— —	Communication conduit
—T— —	—t— —	Telephone conduit
—F— —	—f— —	Fire alarm conduit
—FO— —	—fo— —	Fiber optic conduit
— — —]	— — —]	Conduit termination (RSP ES-9A C)
R	r	Conduit riser in/on structure or service pole

SERVICE EQUIPMENT

PROPOSED	EXISTING	
—OH—	—oh—	Overhead lines
U	U	Wood pole "U" indicates utility owned
		Pole guy with anchor
		Utility transformer - ground mounted
III		Service equipment enclosure type
		Service equipment enclosure door indicates front of enclosure
T	t	Telephone demarcation cabinet

POLE-MOUNTED SERVICE DESIGNATION

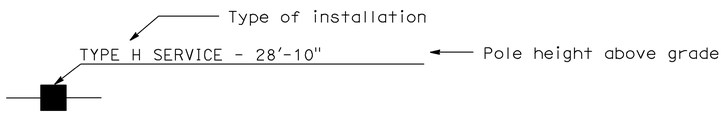

ILLUMINATED OVERHEAD SIGN

PROPOSED	EXISTING	
		Overhead sign - Single post
		Overhead sign - Two post
		Overhead sign - Mounted on structure
		Overhead sign with electrolier

SIGNAL EQUIPMENT

PROPOSED	EXISTING	
		Pedestrian signal face
		Pedestrian push button post
		Pedestrian barricade
		Vehicle signal face (with backplate, 3-Section: red, yellow and green)
		Vehicle signal face with angle visors
PV	PV	Modifications of basic symbols: "L" Indicates all non-arrow sections louvered "LG" Indicates louvered green section only "PV" Indicates 12" programmed visibility sections "8" indicates all 8" sections (only when specified)
		Type 15TS and Vehicle signal face
		Vehicle signal face with red, yellow and green left arrow sections
		Vehicle signal face with red and yellow sections and up green arrow
		Vehicle signal face (5 Section) with red, yellow and green sections and yellow and green right arrows
		Type 1 Standard and attached vehicle signal faces
		Standard with signal mast arm only and attached vehicle signal faces and internally illuminated street name sign
		Type 33 Standard, Left-turn vehicle signal face and sign
		Standard with luminaire and signal mast arms and attached vehicle signal faces
		Cantilever flashing beacon Type 9 Frame, with a sign unless otherwise specified or indicated
		Type 15-FBS Standard with two vehicle signal face sections with lens, backplate and visor with a sign
R	Y	Flashing beacon. One vehicle signal face section with lens, backplate and visor. "R" indicates red indication, "Y" indicates yellow indication
		Controller assembly. Door indicates front of cabinet

SIGNAL EQUIPMENT Cont

PROPOSED	EXISTING	
		Guard post
		Type 1 Standard with "Meter On" sign
		Emergency Vehicle detector

NOTES:

1. All signal sections shall be 12" unless shown otherwise.
2. Signal heads shall be provided with backplates unless shown otherwise.
3. Signal indication shall be LED.

STATE OF CALIFORNIA
DEPARTMENT OF TRANSPORTATION

ELECTRICAL SYSTEMS (SYMBOLS AND ABBREVIATIONS)

NO SCALE

RSP ES-1B DATED OCTOBER 5, 2007 SUPERCEDES STANDARD PLAN ES-1B
DATED MAY 1, 2006 - PAGE 401 OF THE STANDARD PLANS BOOK DATED MAY 2006.

REVISED STANDARD PLAN RSP ES-1B

2006 REVISED STANDARD PLAN RSP ES-1B

7-10-07

DIST	COUNTY	ROUTE	POST MILES TOTAL PROJECT	SHEET NO.	TOTAL SHEETS
12	Ora	5	1.3/1.7	97	127

Jeffery G. McRae
REGISTERED ELECTRICAL ENGINEER

October 5, 2007
PLANS APPROVAL DATE

REGISTERED PROFESSIONAL ENGINEER — Jeffery G. McRae — No. E14512 — Exp. 6-30-08 — ELECTRICAL — STATE OF CALIFORNIA

The State of California or its officers or agents shall not be responsible for the accuracy or completeness of electronic copies of this plan sheet.

To accompany plans dated 3-23-09

EQUIPMENT IDENTIFICATION

ILLUMINATED SIGN IDENTIFICATION NUMBER:

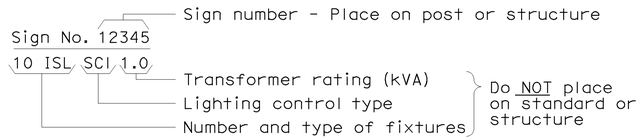

ELECTROLIER OR EQUIPMENT IDENTIFICATION NUMBER:

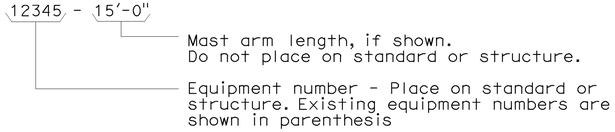

CONDUIT AND CONDUCTOR IDENTIFICATION:

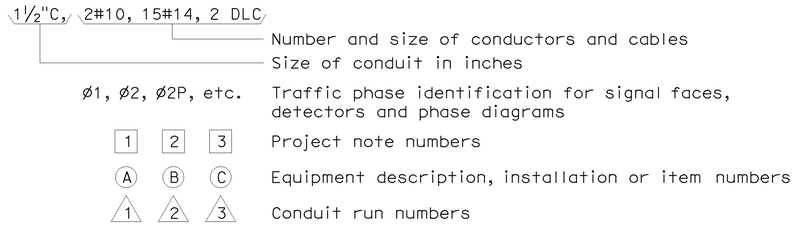

SIGNAL AND LIGHTING STANDARD (TYPICAL DESIGNATION):

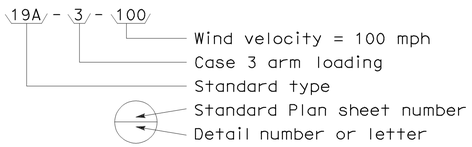

WIRING DIAGRAM LEGEND

P	Pole
CB	Circuit breaker
A	Ampere
V	Volt
M	Metered
UM	Unmetered
NB	Neutral bus
GB	Ground bus
G	Equipment grounding conductor
N	Grounded conductor (Neutral)

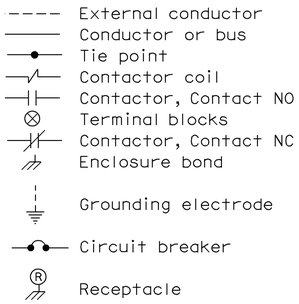

PULL BOXES

PROPOSED EXISTING

Pull box-No. 5 unless otherwise indicated or noted.

Pull box-Additional designations or descriptions

- (C) = Communications pull box
- (E) = Pull box with extension
- (S) = Sprinkler control pull box
- (21) = Anchor bolts and conduit for future installation of Type 21 Standard
- (T) = Traffic pull box

- 3 = No. 3½ pull box
- 5 = No. 5 pull box
- 6 = No. 6 pull box
- 7 = No. 7 (Ceiling pull box)
- 8 = No. 8 (Pendant soffit pull box)
- 9 = No. 9 pull box
- 9A = No. 9A pull box

MISCELLANEOUS EQUIPMENT

PROPOSED	EXISTING	
CMS	cms	Changeable message sign
		Closed circuit television camera
		Highway advisory radio pole and antenna
EMS	ems	Extinguishable message sign
M V	m v	Detection device M = Microwave sensor V = Video image sensor

VEHICLE DETECTORS

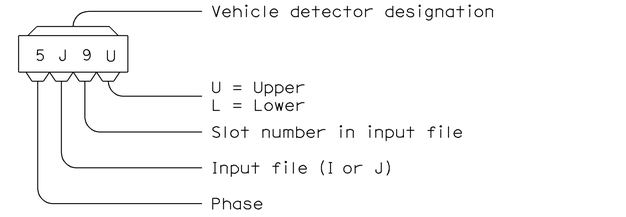

PROPOSED EXISTING

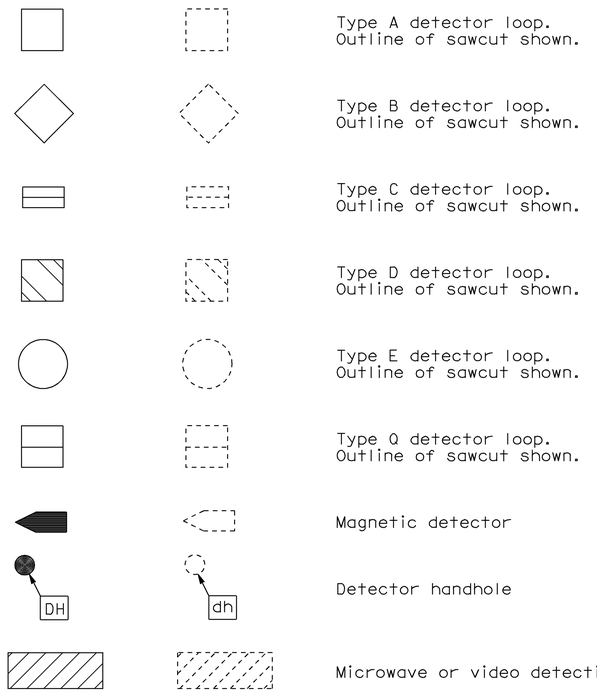

STATE OF CALIFORNIA
DEPARTMENT OF TRANSPORTATION

ELECTRICAL SYSTEMS (SYMBOLS AND ABBREVIATIONS)

NO SCALE

RSP ES-1C DATED OCTOBER 5, 2007 SUPERCEDES STANDARD PLAN ES-1C
DATED MAY 1, 2006 - PAGE 402 OF THE STANDARD PLANS BOOK DATED MAY 2006.

REVISED STANDARD PLAN RSP ES-1C

2006 REVISED STANDARD PLAN RSP ES-1C

7-10-07

DIST	COUNTY	ROUTE	POST MILES TOTAL PROJECT	SHEET NO.	TOTAL SHEETS
12	Ora	5	1.3/1.7	98	127

REGISTERED ELECTRICAL ENGINEER

Jeffery G. McRae
No. E14512
Exp. 6-30-10
ELECTRICAL
REGISTERED PROFESSIONAL ENGINEER
STATE OF CALIFORNIA

June 6, 2008
PLANS APPROVAL DATE

The State of California or its officers or agents shall not be responsible for the accuracy or completeness of electronic copies of this plan sheet.

To accompany plans dated 3-23-09

VISORS

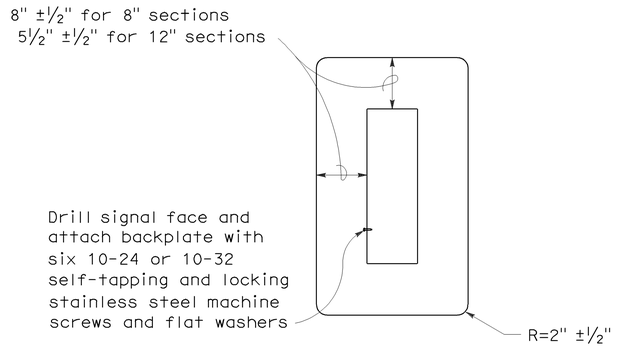

8" AND 12" SECTIONS

BACKPLATE

1/16" minimum thickness
3001-14 aluminum, or plastic when specified

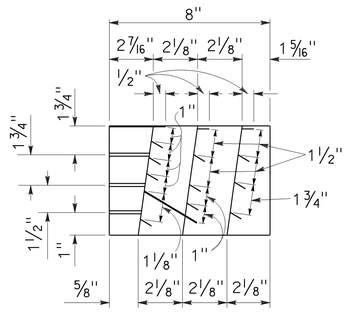

SECTION A-A

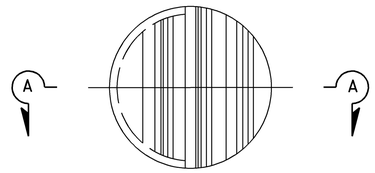

FRONT VIEW

DIRECTIONAL LOUVER

Directional louvers shall be oriented as directed by the Engineer and secured in place with one plated brass machine screw and nut.

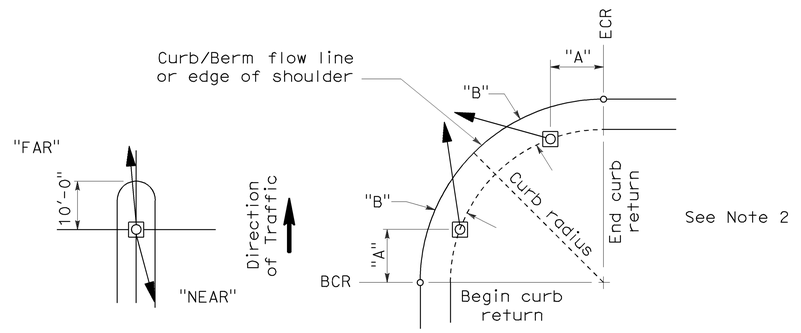

NOTES:

1. Typical signal pole placement unless dimensioned on plans.
2. For "A" and "B" dimensions, see Pole Schedule, or as directed by the Engineer.

SIGNAL STANDARD PLACEMENT DIMENSIONS AND EQUIPMENT LOCATIONS

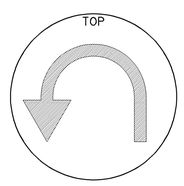

U-TURN SIGNAL FACE

BICYCLE SIGNAL FACE

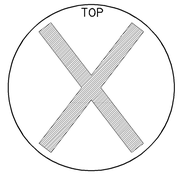

LANE CONTROL SIGNAL FACE

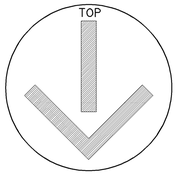

LANE CONTROL SIGNAL FACE

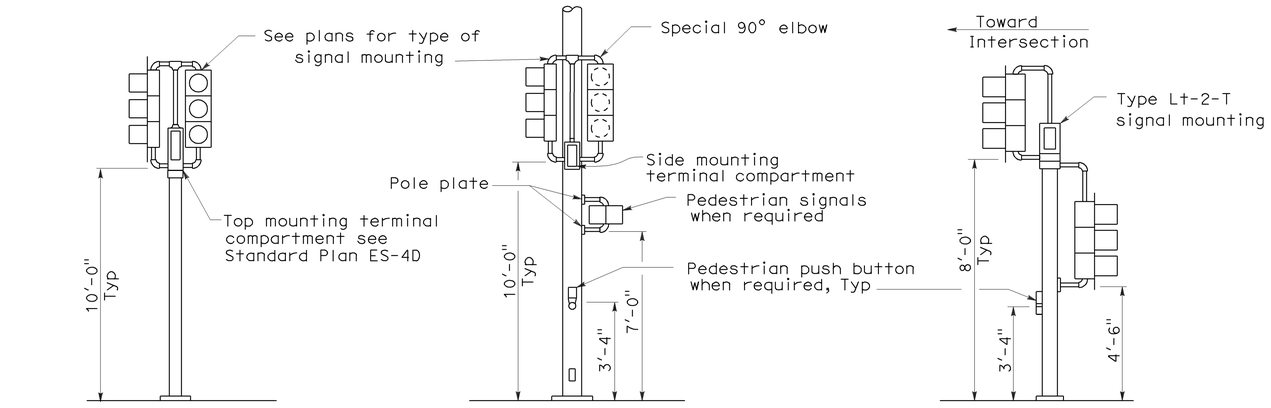

TOP MOUNTED SIGNALS (TV)

Type 1-A, 1-B, 1-C and 1-D standard as indicated on the plans

SIDE MOUNTED SIGNALS (SV AND SP)

Normally used on standards with luminaire or signal mast arm

LEFT TURN LANE SIGNAL

Type 1-A, 1-B, 1-C and 1-D standard as indicated on plans

TYPICAL SIGNAL INSTALLATIONS

STATE OF CALIFORNIA
DEPARTMENT OF TRANSPORTATION

ELECTRICAL SYSTEMS (SIGNAL HEADS AND MOUNTINGS)

NO SCALE

RSP ES-4C DATED JUNE 6, 2008 SUPERSEDES STANDARD PLAN ES-4C DATED MAY 1, 2006 - PAGE 420 OF THE STANDARD PLANS BOOK DATED MAY 2006.

REVISED STANDARD PLAN RSP ES-4C

2006 REVISED STANDARD PLAN RSP ES-4C

5-19-08

DIST	COUNTY	ROUTE	POST MILES TOTAL PROJECT	SHEET NO.	TOTAL SHEETS
12	Ora	5	1.3/1.7	99	127

Jeffery G. McRae
REGISTERED ELECTRICAL ENGINEER

REGISTERED PROFESSIONAL ENGINEER
Jeffery G. McRae
No. E14512
Exp. 6-30-10
ELECTRICAL
STATE OF CALIFORNIA

June 6, 2008
PLANS APPROVAL DATE

The State of California or its officers or agents shall not be responsible for the accuracy or completeness of electronic copies of this plan sheet.

To accompany plans dated 3-23-09

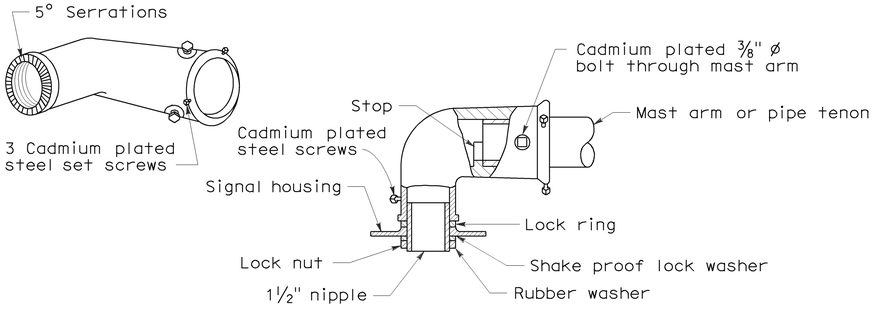

MAST ARM MOUNTING - TYPE "MAT"

For 2 NPS pipe, see Note 1.

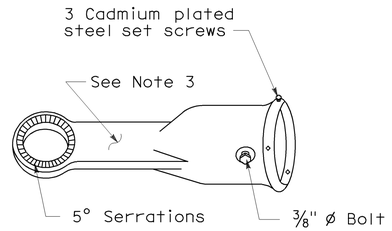

MAST ARM MOUNTING - TYPE "MAS"

For 2 NPS pipe. See Note 1.

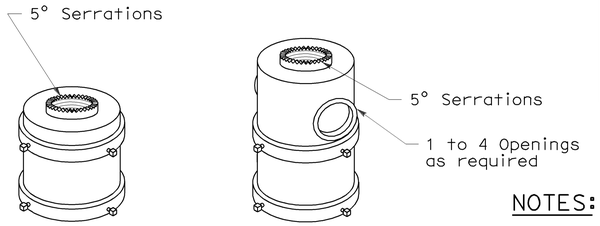

For one mounting For mulitiple mountings

TOP MOUNTINGS

For 4 NPS pipe, see Note 2.

NOTES:

1. After mast arm signal has been plumbed and secured, drill 7/16" hole through mast arm tenon in line with slip fitter hole. Place a cadmium plated ⅜" ø galvanized bolt with washer under bolt head through hole and secure with washer, nut, and locknut. Seal openings between mast arm mountings and mast arm with mastic.
2. (a) Threaded top mounted slip fitter openings shall be 1½ NPS.
   (b) Serrations in fittings shall match those on bottom of signal heads or in lock ring.
   (c) Top opening shall be offset when backplate is used.
3. Wireway shall have a cross section area of 0.95 square inch minimum. Minimum width of ½".

SIGNAL SLIP FITTERS

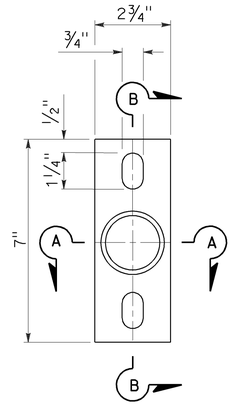

POLE PLATE

For side mountings

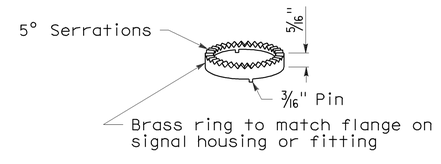

LOCK RING

Use where locking ring is not integral with signal housing or fitting.

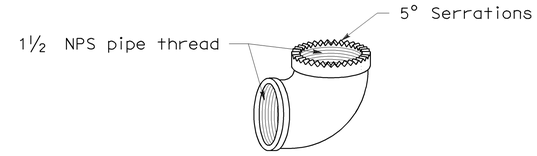

SPECIAL 90° ELBOW

One for each signal head, except those with special slip fitter mounting

MISCELLANEOUS MOUNTING HARDWARE

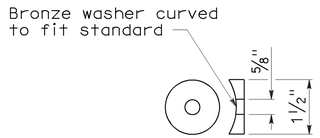

DETAIL "C"

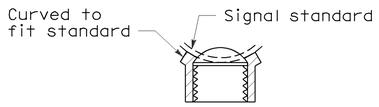

SECTION A-A

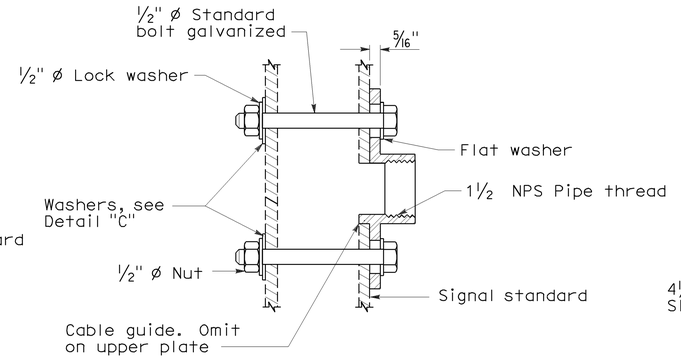

SECTION B-B

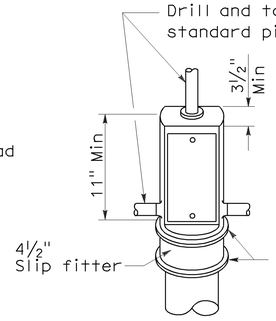

TOP MOUNTING

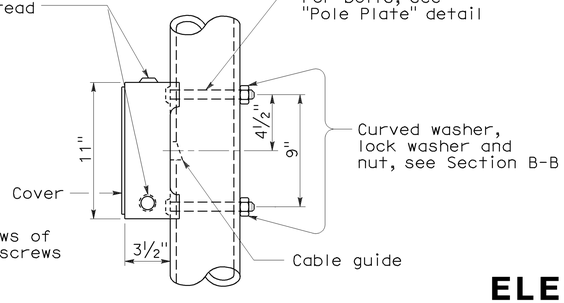

SIDE MOUNTING

TERMINAL COMPARTMENTS

STATE OF CALIFORNIA
DEPARTMENT OF TRANSPORTATION

ELECTRICAL SYSTEMS (SIGNAL HEADS AND MOUNTINGS)

NO SCALE

RSP ES-4D DATED June 6, 2008 SUPERSEDES STANDARD PLAN ES-4D
DATED MAY 1, 2006 - PAGE 421 OF THE STANDARD PLANS BOOK DATED MAY 2006.

REVISED STANDARD PLAN RSP ES-4D

2006 REVISED STANDARD PLAN RSP ES-4D

5-19-08

DIST	COUNTY	ROUTE	POST MILES TOTAL PROJECT	SHEET NO.	TOTAL SHEETS
12	Ora	5	1.3/1.7	100	127

Jeffery G. McRae
REGISTERED ELECTRICAL ENGINEER

REGISTERED PROFESSIONAL ENGINEER
Jeffery G. McRae
No. E14512
Exp. 6-30-08
ELECTRICAL
STATE OF CALIFORNIA

October 5, 2007
PLANS APPROVAL DATE

The State of California or its officers or agents shall not be responsible for the accuracy or completeness of electronic copies of this plan sheet.

To accompany plans dated 3-23-09

LOOP INSTALLATION PROCEDURE

1. Loops shall be centered in lanes.
2. Saw slots in pavement for loop conductors as shown in details.
3. Distance between side of loop and a lead-in saw cut from adjacent detectors shall be 2'-0" minimum. Distance between lead-in saw cuts shall be 6" minimum.
4. Bottom of saw slot shall be smooth with no sharp edges.
5. Slots shall be washed until clean, blown out and thoroughly dried before installing loop conductors.
6. Adjacent loops on the same sensor unit channel shall be wound in opposite directions.
7. Identify and tag loop circuit pairs in the pull box with loop number, start (S) and finish (F) of conductor. Identify and tag lead-in-cable with sensor number and phase.
8. Install loop conductor in slot using a 3/16" to 1/4" thick wood paddle. Hold loop conductors with wood paddles (at the bottom of the sawed slot) during sealant placement.
9. No more than 2 twisted pairs shall be installed in one sawed slot.
10. Allow additional 5'-0" of slack length of conductor for the lead-in run to pull box.
11. The additional length of each conductor for each loop shall be twisted together into a pair (6 turns per 3'-4" minimum) before being placed in the slot and conduit leading to pull box.
12. Test each loop circuit for continuity, circuit resistance and insulation resistance at the pull box before filling slots.
13. Fill slots as shown in details.
14. Splice loop conductors to lead-in-cable. Splices shall be soldered.
15. End of lead-in-cable and Type 2 loop conductor shall be waterproofed prior to installing in conduit to prevent moisture from entering the cable.
16. Lead-in-cable shall not be spliced between the pull box and the controller cabinet terminals.
17. Test each loop circuit for continuity, circuit resistance and insulation resistance at the controller cabinet location.
18. Where loop conductors are not to be spliced to a lead-in-cable, the ends of the conductors shall be taped and waterproofed with electrical insulating coating.

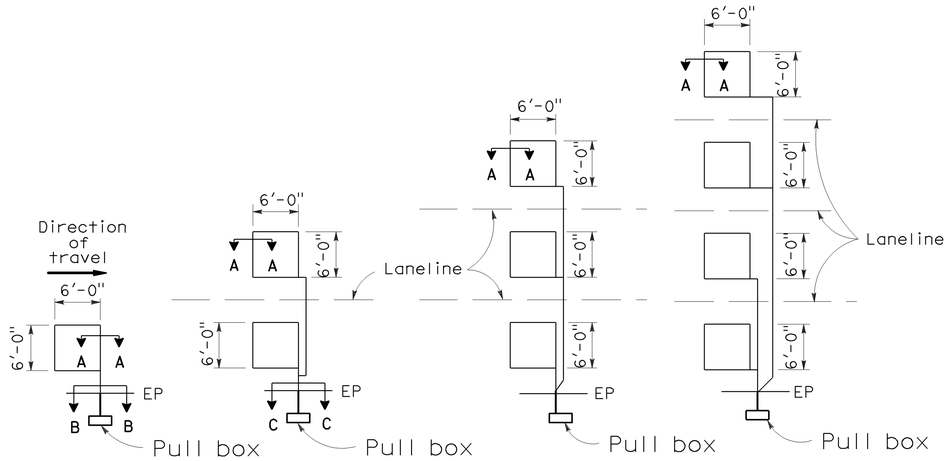

TYPE 1A INSTALLATION | TYPE 2A INSTALLATION | TYPE 3A INSTALLATION | TYPE 4A INSTALLATION

SAWCUT DETAILS

(Type A loop detector configurations illustrated)

1. 1A thru 4A = 1 Type A loop configuration in each lane.
2. 1B thru 4B = 1 Type B loop configuration in each lane.
3. 1C = 1 Type C loop configuration entering lanes as required.
4. 1D thru 4D = 1 Type D loop configuration in each lane.
5. 1E thru 4E = 1 Type E loop configuration in each lane.
6. 1Q thru 4Q = 1 Type Q loop configuration in each lane. (Use Type A, B, C, D, E or Q loop detector configurations only when specified or shown on plans)

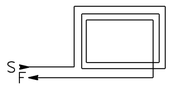

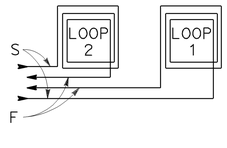

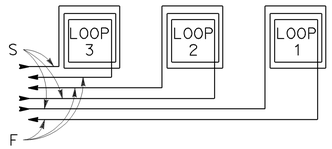

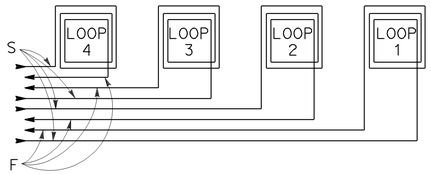

WINDING DETAILS

See Notes 6 and 7

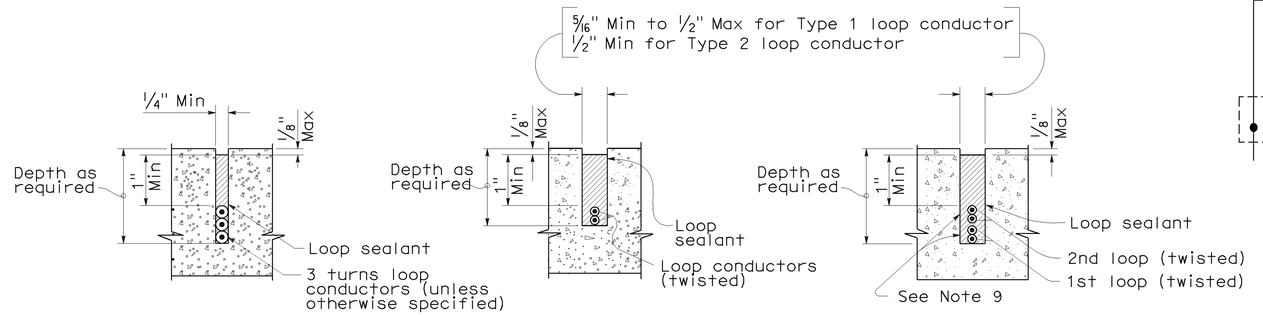

SECTION A-A | SECTION B-B | SECTION C-C

SLOT DETAILS - TYPE 1 AND TYPE 2 LOOP CONDUCTOR

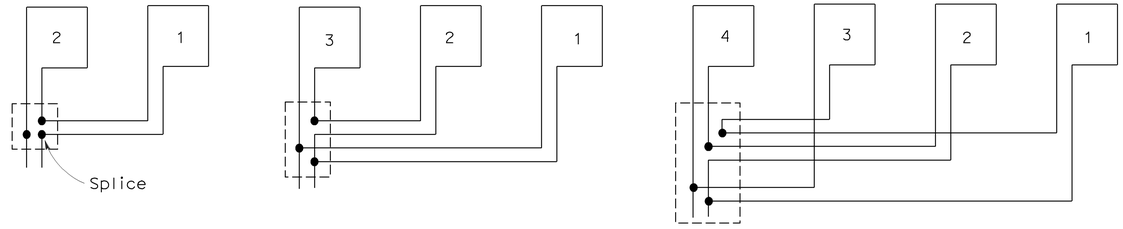

TYPICAL LOOP CONNECTIONS

(Dashed lines represent the pull box)

STATE OF CALIFORNIA
DEPARTMENT OF TRANSPORTATION

ELECTRICAL SYSTEMS (DETECTORS)

NO SCALE

RSP ES-5A DATED OCTOBER 5, 2007 SUPERCEDES STANDARD PLAN ES-5A
DATED MAY 1, 2006 - PAGE 423 OF THE STANDARD PLANS BOOK DATED MAY 2006.

REVISED STANDARD PLAN RSP ES-5A

2006 REVISED STANDARD PLAN RSP ES-5A

8-17-07

DIST	COUNTY	ROUTE	POST MILES TOTAL PROJECT	SHEET NO.	TOTAL SHEETS
12	Ora	5	1.3/1.7	101	127

REGISTERED CIVIL ENGINEER

October 5, 2007
PLANS APPROVAL DATE

Stanley P. Johnson
No. C57793
Exp. 3-31-08
CIVIL
REGISTERED PROFESSIONAL ENGINEER
STATE OF CALIFORNIA

The State of California or its officers or agents shall not be responsible for the accuracy or completeness of electronic copies of this plan sheet.

To accompany plans dated 3-23-09

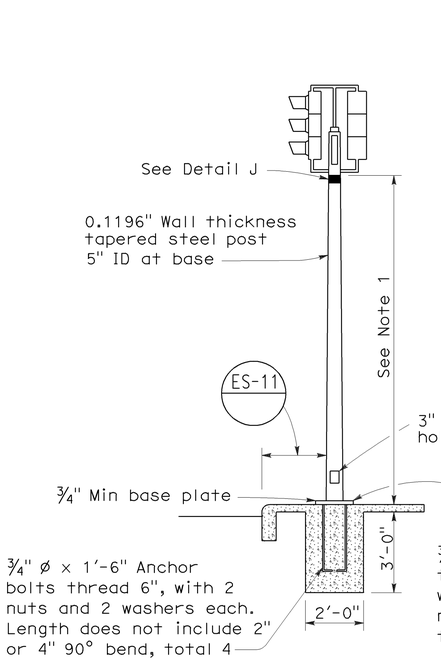

TYPE 1-A STANDARD

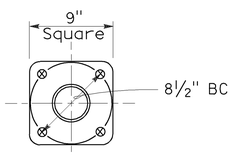

BASE PLATE
For Type 1-A
For Type 1-C
For Type 1-D

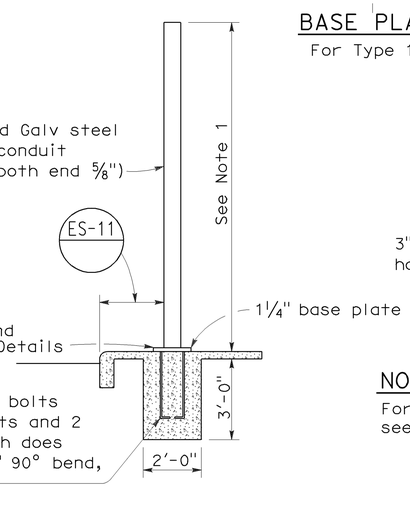

TYPE 1-B STANDARD

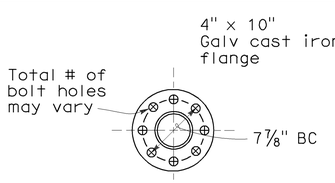

BASE PLATE
For Type 1-B

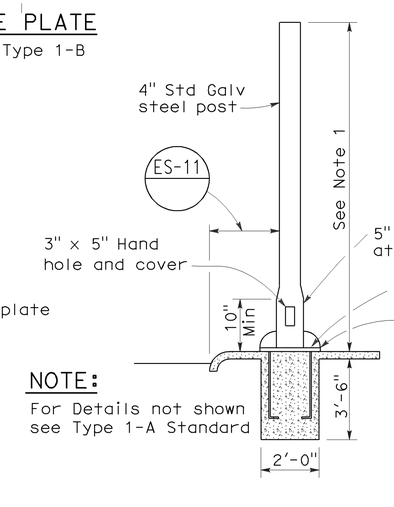

NOTE:
For Details not shown see Type 1-A Standard

TYPE 1-C STANDARD

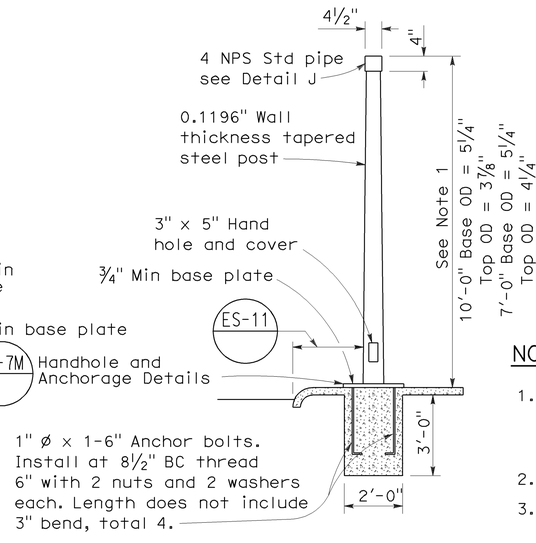

TYPE 1-D STANDARD

TYPE 1 SIGNAL STANDARDS

NOTES:

1. Standards shall be 10'-0" ± 2" for vehicle signals and 7'-0" ± 2" for pedestrian signals unless otherwise noted on plans.
2. Top of standards shall be 4½" OD.
3. Conduits shall extend 2" maximum above finished surface of foundation and for Types 1-A, 1-C and 1-D shall be sloped toward handhole.
4. Anchor bolts shall be bonded to conduit or grounding conductor.
5. Conduit between standard and adjacent pull box shall be 2" minimum.
6. Paint numbers on roadway side facing traffic when electrolier or post is left of direction of traffic.

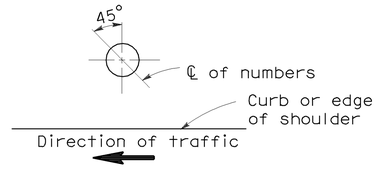

PLAN

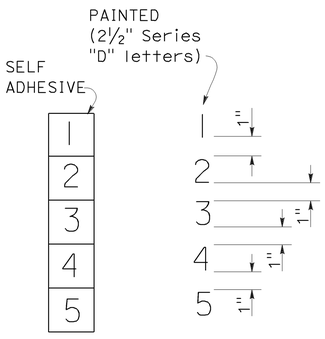

NUMBER DETAIL

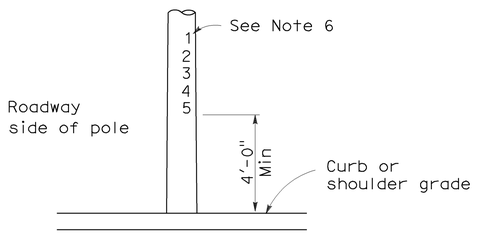

TYPICAL NUMBER FORMAT

LOCATION OF EQUIPMENT NUMBERS ON STANDARDS AND POSTS

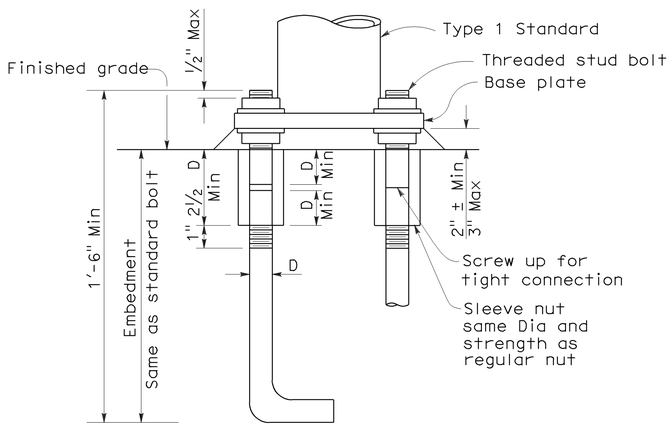

ANCHOR BOLTS WITH SLEEVE NUTS

Sleeve nuts to be used only when shown or specified on Project Plans

D = Diameter of anchor bolt

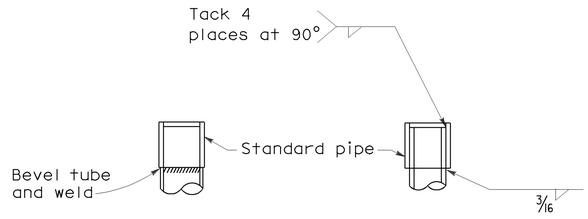

DETAIL J

Tube may be inserted into pipe or butted as required

STATE OF CALIFORNIA
DEPARTMENT OF TRANSPORTATION

ELECTRICAL SYSTEMS (SIGNAL AND LIGHTING STANDARD TYPE 1 STANDARD AND EQUIPMENT NUMBERING)

NO SCALE

RSP ES-7B DATED OCTOBER 5, 2007 SUPERCEDES STANDARD PLAN ES-7B DATED MAY 1, 2006 - PAGE 438 OF THE STANDARD PLANS BOOK DATED MAY 2006.

REVISED STANDARD PLAN RSP ES-7B

2006 REVISED STANDARD PLAN RSP ES-7B

7-10-07

DIST	COUNTY	ROUTE	POST MILES TOTAL PROJECT	SHEET NO.	TOTAL SHEETS
12	Ora	5	1.3/1.7	102	127

REGISTERED CIVIL ENGINEER

October 5, 2007
PLANS APPROVAL DATE

Stanley P. Johnson
No. C57793
Exp. 3-31-08
CIVIL
REGISTERED PROFESSIONAL ENGINEER
STATE OF CALIFORNIA

The State of California or its officers or agents shall not be responsible for the accuracy or completeness of electronic copies of this plan sheet.

To accompany plans dated 3-23-09

2006 REVISED STANDARD PLAN RSP ES-7F

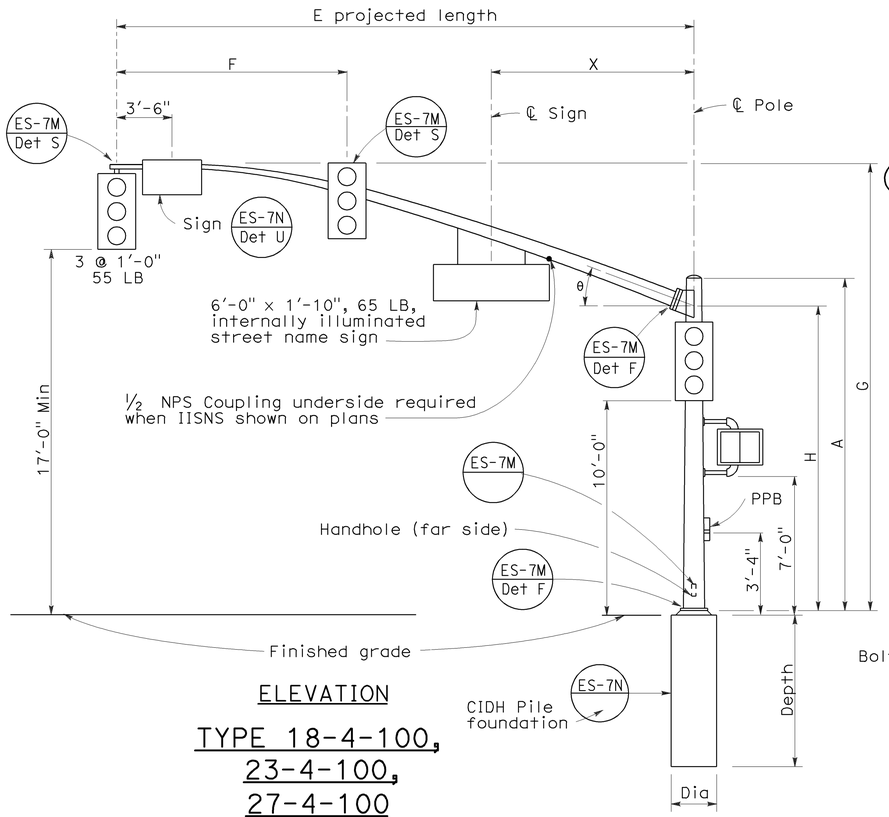

ELEVATION

TYPE 18-4-100, 23-4-100, 27-4-100

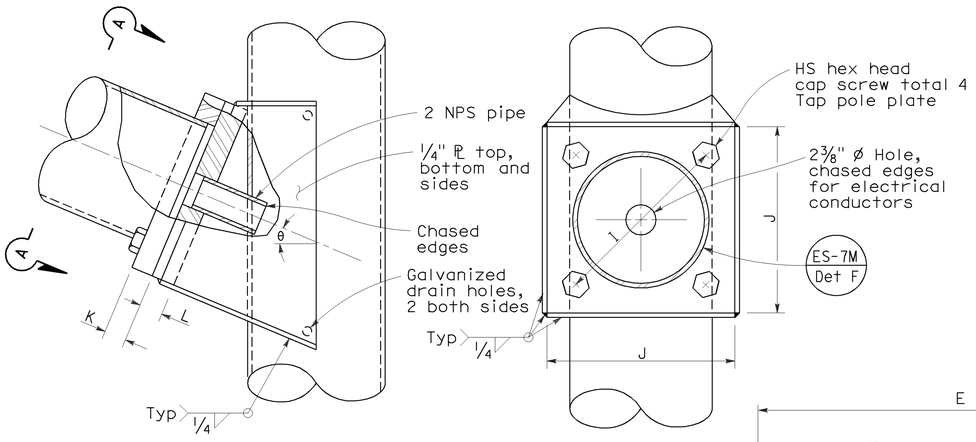

ELEVATION VIEW A-A

SIGNAL ARM CONNECTION DETAILS

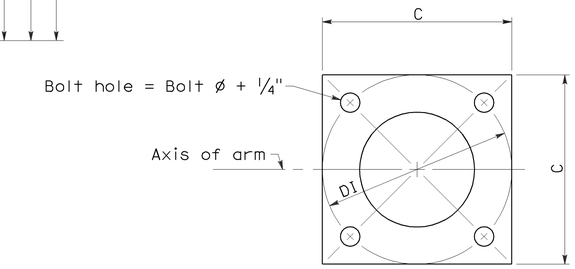

BASE PLATE

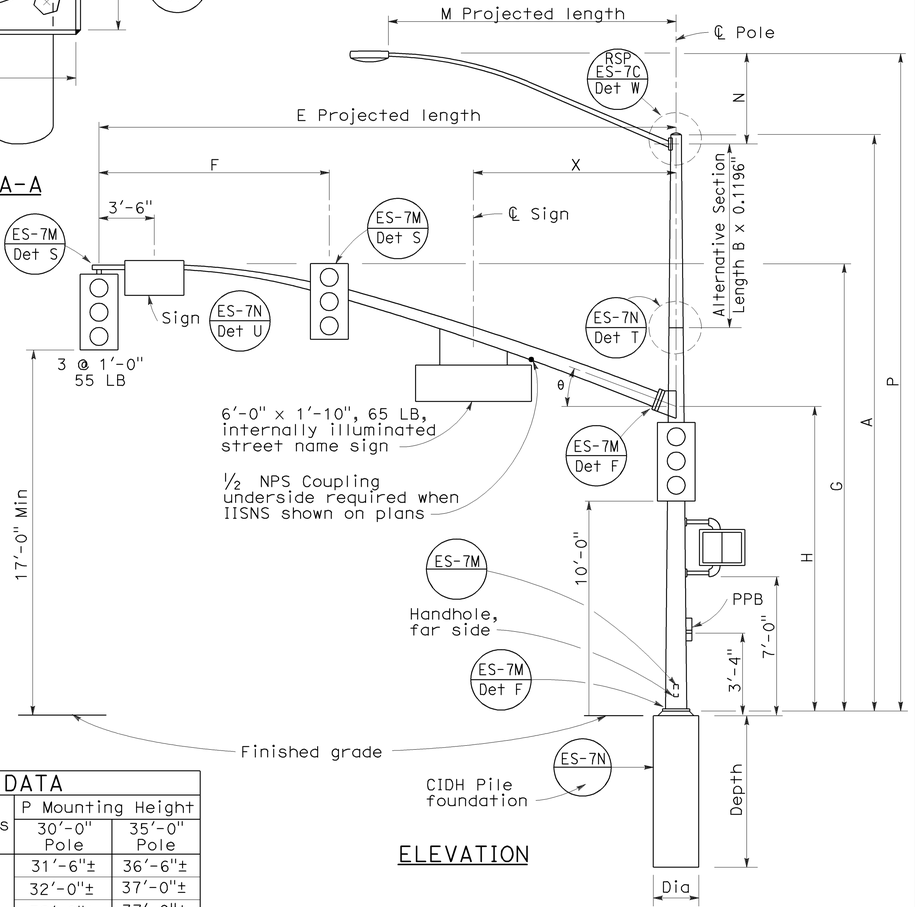

ELEVATION

TYPE 19-4-100, 19A-4-100, 24-4-100, 24A-4-100, 26-4-100, 26A-4-100

SIGNAL ARM DATA

E Projected Length	F Min Spacing	G Mounting Height	H	Min OD at Pole	Thickness	I Bolt Circle	HS Cap Screws	J Plate Size	K Arm ℙ Thickness	L Pole ℙ Thickness	θ	X Max
25'-0"	10'-0"	22'-8"±	16'-0"	7 5/16"	0.2391"	12"	1 1/4"-7NC-3"	1'-0"	1 1/4"	1 1/2"	23°	10'-6"
30'-0"	12'-0"	23'-0"±		8"		13 1/2"		1'-1 1/2"	1 1/2"	1 3/4"	21°	
35'-0"	14'-0"			8 11/16"								
40'-0"	15'-0"			9 3/8"							15°	13'-0"
45'-0"		23'-8"±		10 1/4"								

LUMINAIRE ARM DATA

M Projected Length	N Rise	Min OD at Pole	Thickness	P Mounting Height 30'-0" Pole	P Mounting Height 35'-0" Pole
6'-0"	2'-0"±	3 1/4"	0.1196"	31'-6"±	36'-6"±
8'-0"	2'-6"±	3 1/2"		32'-0"±	37'-0"±
10'-0"	3'-3"±	3 7/8"		32'-9"±	37'-9"±
12'-0"	4'-3"±			33'-9"±	38'-9"±
15'-0"	4'-9"±	4 1/4"		34'-3"±	39'-3"±

POLE DATA / BASE PLATE DATA / CIDH PILE FOUNDATION

Pole Type	Load Case	Wind Velocity mph	POLE DATA: A Height	Min OD Base	Min OD Top	Thickness	Alternative Section B Length	Alternative Section Bottom	Alternative Section Top	BASE PLATE DATA: C	DI Bolt Circle	Thickness	Anchor Bolts Size	Luminaire Arm	Signal Arm	CIDH PILE FOUNDATION: Dia	Depth	Reinforced
18-4-100	4	100	17'-0"	12"	9"	0.2391"	None	9 3/8"		1'-6"	1'-6"	1 1/2"	2" ø x 42" x 6"	None	25'-0", [30'-0"]	3'-0"	9'-0"	Yes
19-4-100			30'-0"		8"		10'-0"		8"					6'-15' [12'-0"]				
19A-4-100			35'-0"		7 5/16"		15'-0'		7 5/16"					6'-15' [15'-0"]				
23-4-100			17'-0"		9"		None							None	35'-0"			
24-4-100			30'-0"		8"		10'-0"	9 3/8"	8"					6'-15' [12'-0"]				
24A-4-100			35'-0"		7 5/16"		15'-0"		7 5/16"					6'-15' [15'-0"]				
26-4-100			30'-0"	12 1/2"	8"	0.3125"	10'-0"	9 3/4"	8 3/8"					6'-15' [12'-0"]	40'-0", [45'-0"]			
26A-4-100			35'-0"		7 5/16"		15'-0"		7 11/16"					6'-15' [15'-0"]				
27-4-100			17'-0"		9 3/4"		None							None				

☐ Indicates arm length to be used unless otherwise noted on plans.

STATE OF CALIFORNIA
DEPARTMENT OF TRANSPORTATION

ELECTRICAL SYSTEMS (SIGNAL AND LIGHTING STANDARD CASE 4 ARM LOADING WIND VELOCITY=100 MPH ARM LENGTHS 25' TO 45')

NO SCALE

RSP ES-7F DATED OCTOBER 5, 2007 SUPERCEDES RSP ES-7F DATED NOVEMBER 17, 2006 AND STANDARD PLAN ES-7F DATED MAY 1, 2006 - PAGE 442 OF THE STANDARD PLANS BOOK DATED MAY 2006.

REVISED STANDARD PLAN RSP ES-7F

7-10-07

DIST	COUNTY	ROUTE	POST MILES TOTAL PROJECT	SHEET NO.	TOTAL SHEETS
12	Ora	5	1.3/1.7	103	127

Jeffery G. McRae
REGISTERED ELECTRICAL ENGINEER

October 5, 2007
PLANS APPROVAL DATE

REGISTERED PROFESSIONAL ENGINEER — Jeffery G. McRae — No. E14512 — Exp. 6-30-08 — ELECTRICAL — STATE OF CALIFORNIA

The State of California or its officers or agents shall not be responsible for the accuracy or completeness of electronic copies of this plan sheet.

To accompany plans dated 3-23-09

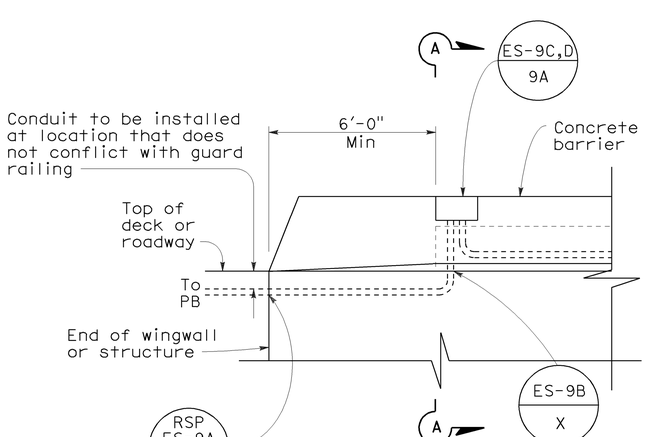

SIDEVIEW

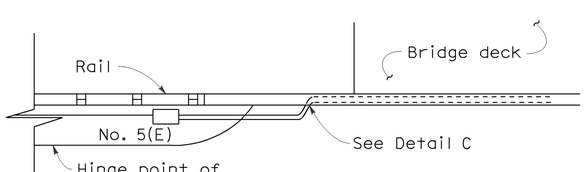

TOP VIEW

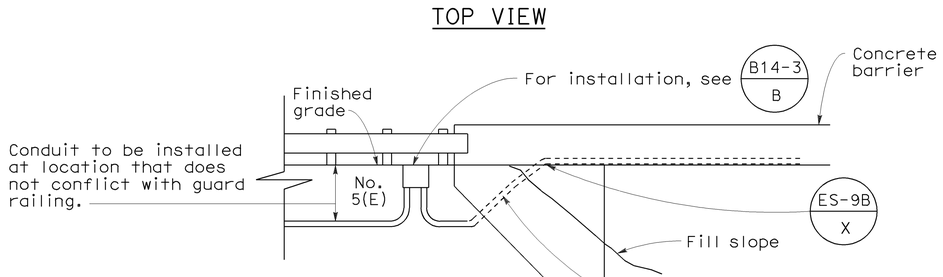

SIDE VIEW
DETAIL I
CONDUIT TERMINATION

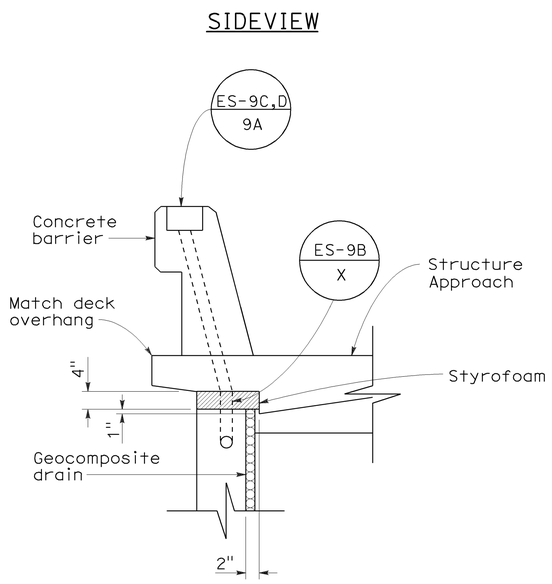

SECTION A-A

DETAIL A
CONDUIT TERMINATION

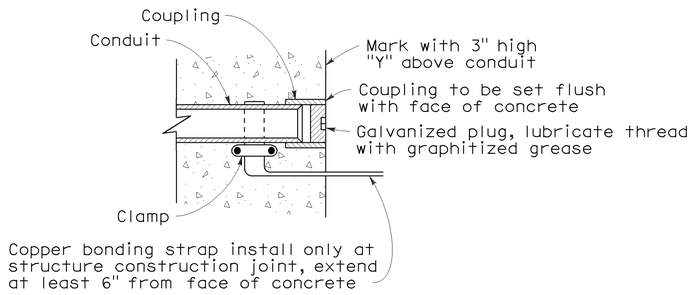

DETAIL C
CONDUIT TERMINATION

STATE OF CALIFORNIA
DEPARTMENT OF TRANSPORTATION

ELECTRICAL SYSTEMS (ELECTRICAL DETAILS STRUCTURE INSTALLATIONS)

NO SCALE

RSP ES-9A DATED OCTOBER 5, 2007 SUPERCEDES STANDARD PLAN ES-9A
DATED MAY 1, 2006 - PAGE 454 OF THE STANDARD PLANS BOOK DATED MAY 2006.

REVISED STANDARD PLAN RSP ES-9A

2006 REVISED STANDARD PLAN RSP ES-9A

7-11-07

DIST	COUNTY	ROUTE	POST MILES TOTAL PROJECT	SHEET NO.	TOTAL SHEETS
12	Ora	5	1.3/1.7	104	127

Jeffery G. McRae
REGISTERED ELECTRICAL ENGINEER

October 5, 2007
PLANS APPROVAL DATE

Jeffery G. McRae
No. E14512
Exp. 6-30-08
ELECTRICAL
REGISTERED PROFESSIONAL ENGINEER
STATE OF CALIFORNIA

The State of California or its officers or agents shall not be responsible for the accuracy or completeness of electronic copies of this plan sheet.

To accompany plans dated 3-23-09

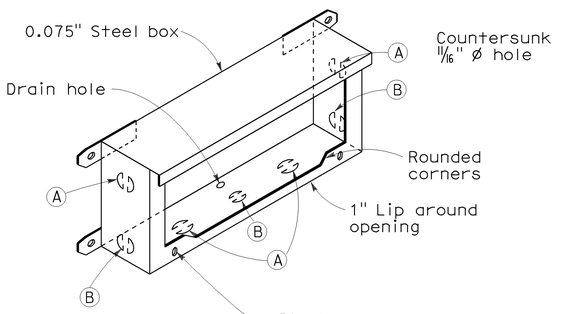

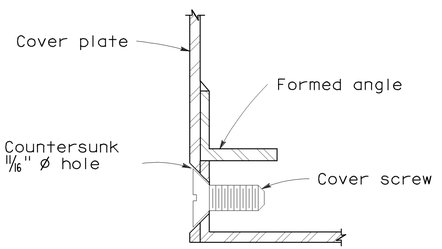

DETAIL J

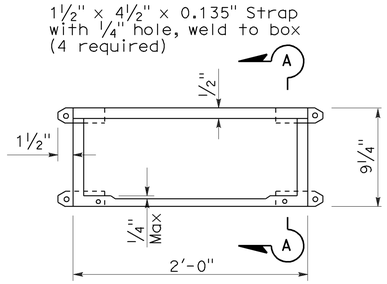

PLAN

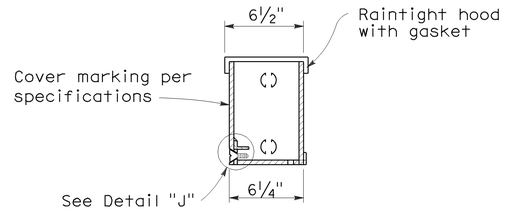

SECTION A-A

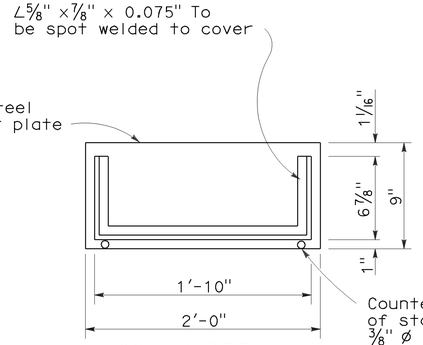

COVER DETAIL

INSTALLATION NOTE:

Box shall be parallel to top of railing. Close cover box during pouring with 1/4" plywood of sufficient size to provide 1:1 chamfer on 3 sides of cover. Upper edge of plywood shall fit against lower edge of raintight hood.

No. 9 STRUCTURE PULL BOX

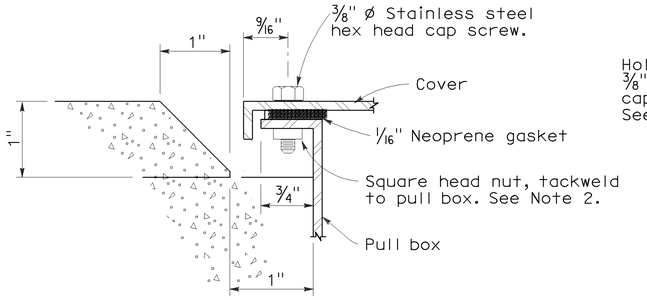

SECTION C-C

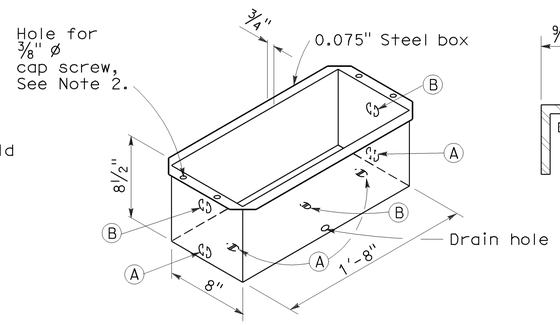

DETAIL A

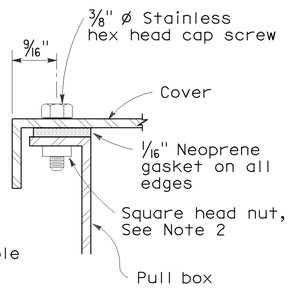

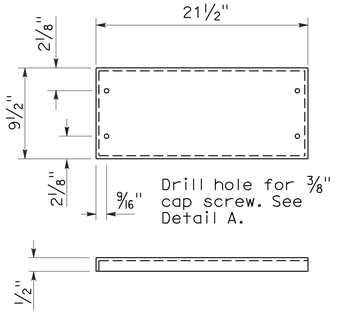

COVER DETAIL

NOTES: No. 9 and 9A Pull Box

1. Corner joints shall be lapped and secured by spot welding or riveting.
2. Where cap screws are used to attach cover to box, either of the following methods of providing adequate threading may be used:
   a. Tack weld square nut to bottom of flange (Total 4), or
   b. Tack weld a 1/4" x 5/8" x 8" bar beneath flange (Total 2).
3. Pound knockouts flat after punching.
4. Multiple size knockouts shall not be permitted.
5. Pull box covers shall be marked as shown on Standard Plan ES-8.

No. 9A STRUCTURE PULL BOX

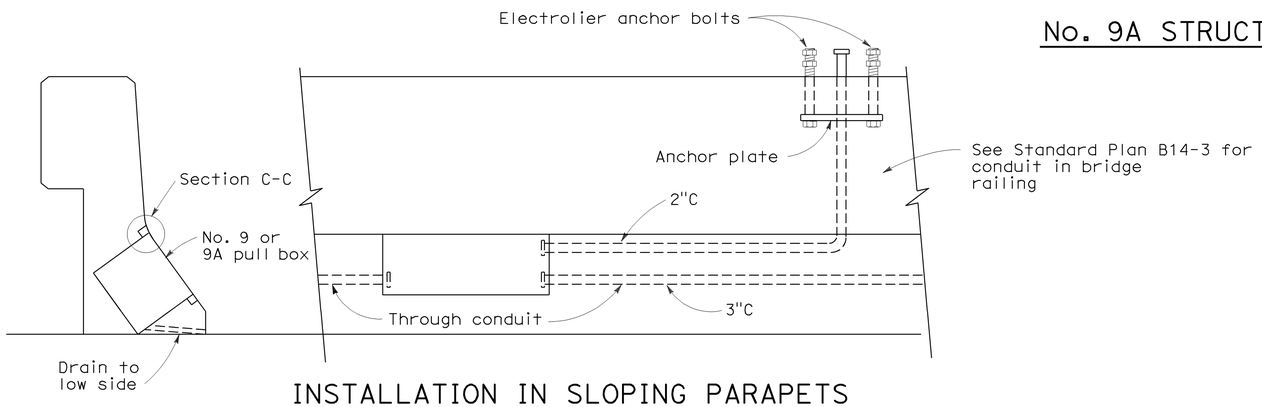

INSTALLATION IN SLOPING PARAPETS

For reinforcement in area of electrolier, see railing sheets. For electrolier anchor bolts, see Standard Plan ES-6B.

KNOCKOUT SCHEDULE
No. 9 AND 9A PULL BOX

(A) 2"C, 1 each end, 2 on bottom.

(B) 3"C, 1 each end, 1 on bottom.

STATE OF CALIFORNIA
DEPARTMENT OF TRANSPORTATION

ELECTRICAL SYSTEMS (ELECTRICAL DETAILS STRUCTURE INSTALLATIONS)

NO SCALE

RSP ES-9C DATED OCTOBER 5, 2007 SUPERCEDES STANDARD PLAN ES-9C DATED MAY 1, 2006 - PAGE 456 OF THE STANDARD PLANS BOOK DATED MAY 2006.

REVISED STANDARD PLAN RSP ES-9C

2006 REVISED STANDARD PLAN RSP ES-9C

7-26-07

DIST	COUNTY	ROUTE	POST MILES TOTAL PROJECT	SHEET No	TOTAL SHEETS
12	Ora	5	1.3/1.7	105	127

REGISTERED CIVIL ENGINEER — 1/6/2009 DATE

Ashok G. Athalye, No. 34301, Exp. 9-30-2009, CIVIL, REGISTERED PROFESSIONAL ENGINEER, STATE OF CALIFORNIA

3-23-09
PLANS APPROVAL DATE

The State of California or its officers or agents shall not be responsible for the accuracy or completeness of electronic copies of this plan sheet.

OCTA
550 SOUTH MAIN ST.
ORANGE, CA 92863

ATHALYE CONSULTING ENGINEERING SERVICES,INC
26457 RANCHO PKWY S
LAKE FOREST, CA 92630

CURVE DATA

NO.	R	Δ	T	L
①	2000.00′	13°11′00"	231.11′	460.18′
②	1929.50′	13°11′00"	222.97′	443.96′

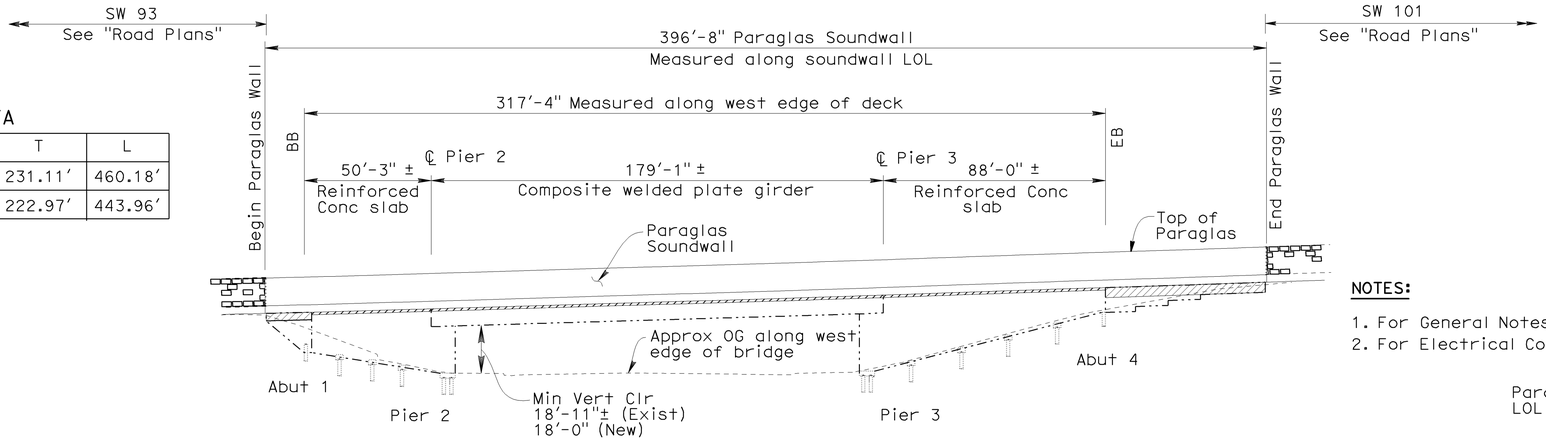

MIRROR DEVELOPED ELEVATION

1" = 30′

NOTES:

1. For General Notes See Sheet No. 2
2. For Electrical Conduit, See "Electrical Plans".

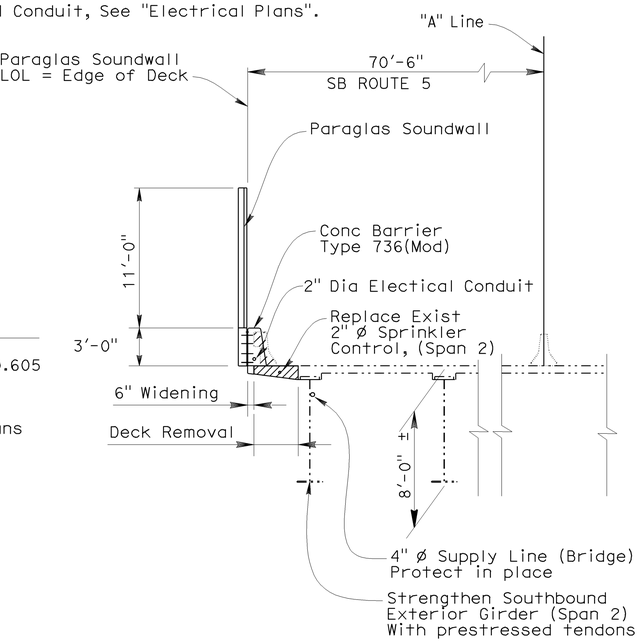

PART TYPICAL SECTION

No Scale

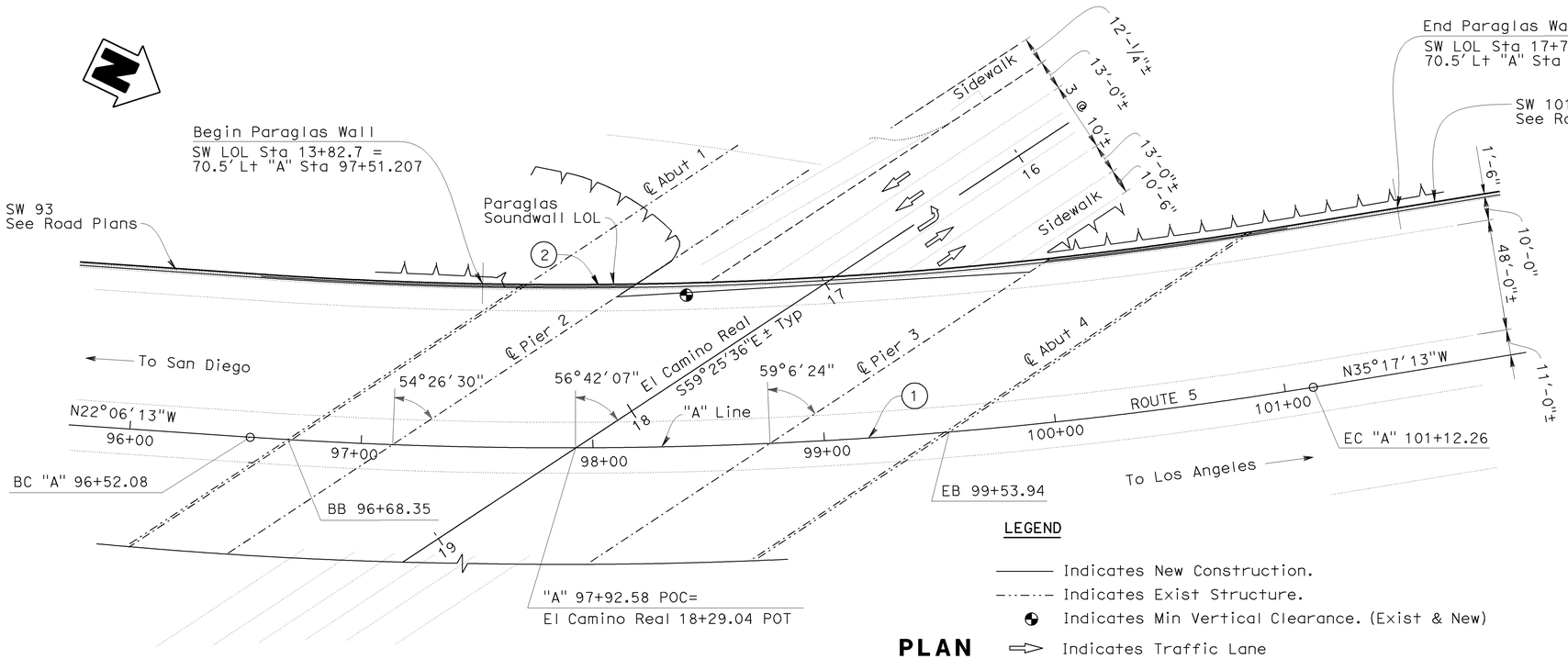

LEGEND

- ——— Indicates New Construction.
- –·–·–·– Indicates Exist Structure.
- ◔ Indicates Min Vertical Clearance. (Exist & New)
- ⇨ Indicates Traffic Lane
- ▨ Bridge Removal

PLAN

1" = 30′

EL CAMINO REAL UC (SOUNDWALL) BR NO 55-0203R

QUANTITIES

BRIDGE REMOVAL (PORTION)	LUMP SUM
STRUCTURE EXCAVATION (BRIDGE)	22 CY
STRUCTURE BACKFILL (BRIDGE)	17 CY
PRESTRESSING	LUMP SUM
TIEBACK ANCHOR	6 EA
STRUCTURAL CONCRETE, BRIDGE	50 CY
DRILL AND BOND DOWEL	600 EA
SOUND WALL (BARRIER)(PARAGLASS)	LUMP SUM
REPLACE BEARING PAD	1 EA
BAR REINFORCING STEEL (BRIDGE)	15,650 LB
STRUCTURAL STEEL (BRIDGE)	2,210 LB
CLEAN AND PAINT STRUCTURAL STEEL	LUMP SUM
WORK AREA MONITORING	LUMP SUM
MISCELLANEOUS METAL (BRIDGE)	80,600 LB
CONCRETE BARRIER (TYPE 736 MODIFIED)	397 LF

The Contractor shall field verify all controlling dimensions before ordering or fabrication of any material.

Jon Hamaguchi
DESIGN OVERSIGHT — Jon Hamaguchi
1-12-09
SIGN OFF DATE

	BY	CHECKED	LOAD FACTOR DESIGN	LIVE LOADING: HS20-44 AND ALTERNATIVE AND PERMIT DESIGN LOAD	
DESIGN	Kotha S. Rao	Raul Fernandez			
DETAILS	Aniket Parkhi	Kotha S. Rao	LAYOUT	Kotha S. Rao	Raul Fernandez
QUANTITIES	L. Fanchun	Kotha S. Rao	SPECIFICATIONS	R. Mills	PLANS AND SPECS COMPARED Raul Fernandez

PREPARED FOR THE STATE OF CALIFORNIA
DEPARTMENT OF TRANSPORTATION

Ashok Athalye
PROJECT ENGINEER

CU 12231
EA 0G9401

BRIDGE NO. 55-0203
POST MILES 1.6

EL CAMINO REAL UC (SOUNDWALL)
GENERAL PLAN

DESIGN GENERAL PLAN SHEET (ENGLISH) (REV. 2/25/05)

ORIGINAL SCALE IN INCHES FOR REDUCED PLANS 0 1 2 3

DISREGARD PRINTS BEARING EARLIER REVISION DATES →

REVISION DATES (PRELIMINARY STAGE ONLY): 9/23/08 11/18/08 12/23/08

SHEET 1 OF 23

FILE => 55-0203-a-gp01.dgn

USERNAME => prmikesi DATE PLOTTED => 30-MAR-2009 TIME PLOTTED => 11:16

DIST	COUNTY	ROUTE	POST MILES TOTAL PROJECT	SHEET No	TOTAL SHEETS
12	Ora	5	1.3/1.7	106	127

1/6/2009
REGISTERED CIVIL ENGINEER — DATE

REGISTERED PROFESSIONAL ENGINEER
Ashok G.Athalye
No. 34301
Exp. 9-30-2009
CIVIL
STATE OF CALIFORNIA

3-23-09
PLANS APPROVAL DATE

The State of California or its officers or agents shall not be responsible for the accuracy or completeness of electronic copies of this plan sheet.

OCTA
550 SOUTH MAIN ST.
ORANGE, CA 92863

ATHALYE CONSULTING ENGINEERING SERVICES,INC
26457 RANCHO PKWY S
LAKE FOREST, CA 92630

GENERAL NOTES:

LOAD FACTOR DESIGN

DESIGN: Caltrans Bridge Design Specification, LFD Version 2004 (1996 16th Edition AASHTO with interims and revisions by Caltrans).

DEAD LOAD: Include 35 psf for future wearing surface.

The Soundwall dead load is distributed on the south side of the bridge with 75% of the moment and 75% of the shear forces to the exterior girder and 25% of the moment and 25% of the shear to the first interior girder.

The barrier dead load is distributed on the left side of the bridge with 100% of the moment and 100% of the shear forces to the exterior girder and 0% of the moment and 0% of the shear to the first interior girder.

LIVE LOADING: HS20-44 and alternative and permit design load.

SOUNDWALL DESIGN

See " PG - Plan & Elevation No. 2" Sheet for Loads and Load Combinations used in Soundwall Design.

Reinforced Concrete: f'c = 3,600 psi
fy = 60,000 psi
n = 10

Structural Steel: Exist Girder (To be Strengthened) fy = 36 ksi
New steel: fy = 36 ksi
Bolts : ASTM A325M

Prestressing Steel (Girder Strengthening): See "Girder Strengthening Details No. 1" Sheet.

Prestressing Steel (Tiebacks): See "RW Strengthening Details No. 2" Sheet.

STANDARD PLANS DATED MAY 2006

SHEET NO.	TITLE
A62-BA	EXCAVATION AND BACKFILL-LIMITS OF PAYMENT (BRIDGE SURCHARGE AND WALL)
A62-BB	EXCAVATION AND BACKFILL-LIMITS OF PAYMENTS (BRIDGE)
B0-1	BRIDGE DETAILS
B0-3	BRIDGE DETAILS
B0-5	BRIDGE DETAILS
B3-1	RETAINING WALL-TYPE 1, H = 4'-30'
B3-8	RETAINING WALL DETAILS NO. 1
RSP B6-21	JOINT SEAL DETAILS
B14-3	SUPPLY LINE AND COMMUNICATION AND SPRINKLER CONTROL CONDUIT (MAXIMUM PIPE OR CONDUIT SIZE = 4")

STANDARD PLAN SHEET NO.
DETAIL NO.

INDEX TO PLANS

SHEET NO.	TITLE
1.	GENERAL PLAN
2.	GENERAL NOTES
3.	CONSTRUCTION STAGING
4.	BRIDGE REMOVAL
5.	DECK MODIFICATION DETAILS
6.	GIRDER STRENGTHENING DETAILS NO. 1
7.	GIRDER STRENGTHENING DETAILS NO. 2
8.	BEARING PAD REPLACEMENT DETAILS
9.	RETAINING WALL STRENGTHENING DETAILS NO. 1
10	RETAINING WALL STRENGTHENING DETAILS NO. 2
11.	WINGWALL MODIFICATION DETAILS
12.	CONCRETE BARRIER TYPE 736 (MOD)
13.	PARAGLAS SOUNDWALL - PLAN & ELEVATION NO. 1
14.	PARAGLAS SOUNDWALL - PLAN & ELEVATION NO. 2
15.	PARAGLAS SOUNDWALL DETAILS NO. 1
16.	PARAGLAS SOUNDWALL DETAILS NO. 2
17.	PARAGLAS SOUNDWALL DETAILS NO. 3
18.	PARAGLAS SOUNDWALL DETAILS NO. 4
19.	LOG OF TEST BORINGS SHEET 1 OF 3
20	LOG OF TEST BORINGS SHEET 2 OF 3
21.	LOG OF TEST BORINGS SHEET 3 OF 3
22.	AS-BUILT LOG OF TEST BORINGS SHEET 1 OF 2
23	AS-BUILT LOG OF TEST BORINGS SHEET 2 OF 2

The Contractor shall field verify all controlling dimensions before ordering or fabrication of any material.

DESIGN OVERSIGHT Jon Hamaguchi
1-12-09
SIGN OFF DATE

	BY	CHECKED
DESIGN	Kotha S. Rao	Raul Fernandez
DETAILS	Aniket Parkhi	Kotha S. Rao
QUANTITIES	L. Fanchun	Kotha S. Rao

PREPARED FOR THE
STATE OF CALIFORNIA
DEPARTMENT OF TRANSPORTATION

Ashok Athalye
PROJECT ENGINEER

CU 12231
EA 0G9401

BRIDGE NO. 55-0203
POST MILE 1.6

EL CAMINO REAL UC (SOUNDWALL)
GENERAL NOTES

DESIGN DETAIL SHEET (ENGLISH) (REV. 2/25/05)

ORIGINAL SCALE IN INCHES FOR REDUCED PLANS 0 1 2 3

DISREGARD PRINTS BEARING EARLIER REVISION DATES →

REVISION DATES (PRELIMINARY STAGE ONLY): 9/23/08 | 11/18/08 | 12/23/08

SHEET 2 OF 23

FILE => 55-0203-b-gnote.dgn

USERNAME => ttcarol DATE PLOTTED => 30-MAR-2009 TIME PLOTTED => 08:56

DIST	COUNTY	ROUTE	POST MILES TOTAL PROJECT	SHEET No	TOTAL SHEETS
12	Ora	5	1.3/1.7	107	127

REGISTERED CIVIL ENGINEER — 1/6/2009 DATE

3-23-09
PLANS APPROVAL DATE

Ashok G.Athalye No. 34301 Exp. 9-30-2009 CIVIL — REGISTERED PROFESSIONAL ENGINEER — STATE OF CALIFORNIA

The State of California or its officers or agents shall not be responsible for the accuracy or completeness of electronic copies of this plan sheet.

OCTA
550 SOUTH MAIN ST.
ORANGE, CA 92863

ATHALYE CONSULTING ENGINEERING SERVICES,INC
26457 RANCHO PKWY S
LAKE FOREST, CA 92630

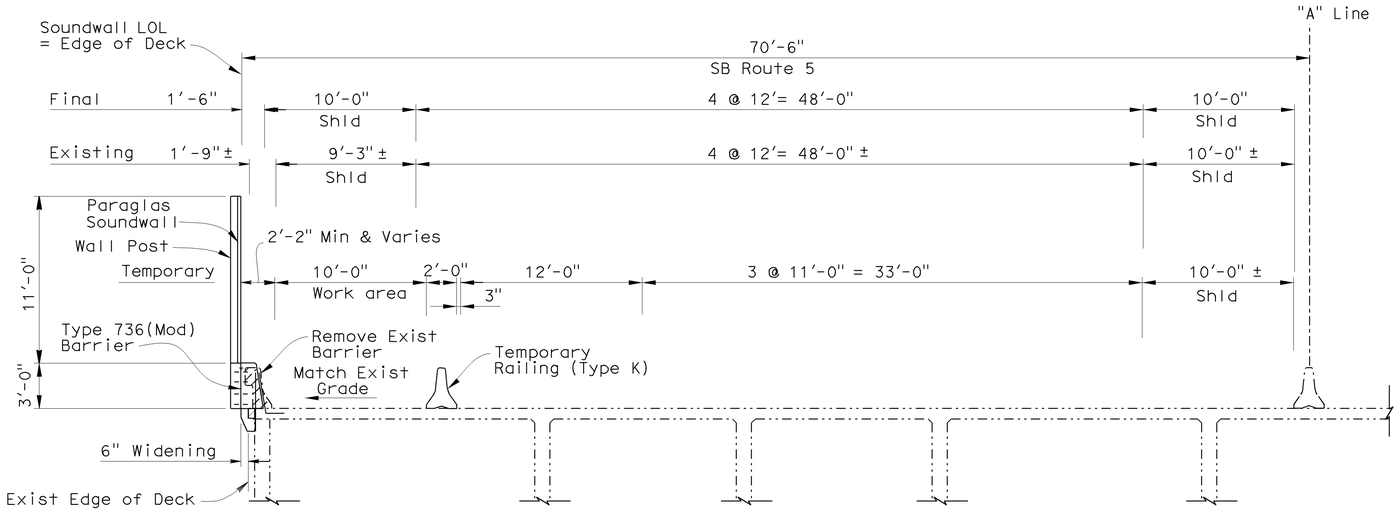

SPAN 1 & 3
1" = 5'

LEGEND:

- Deck removal & replacement
- Existing Structure
- New Construction

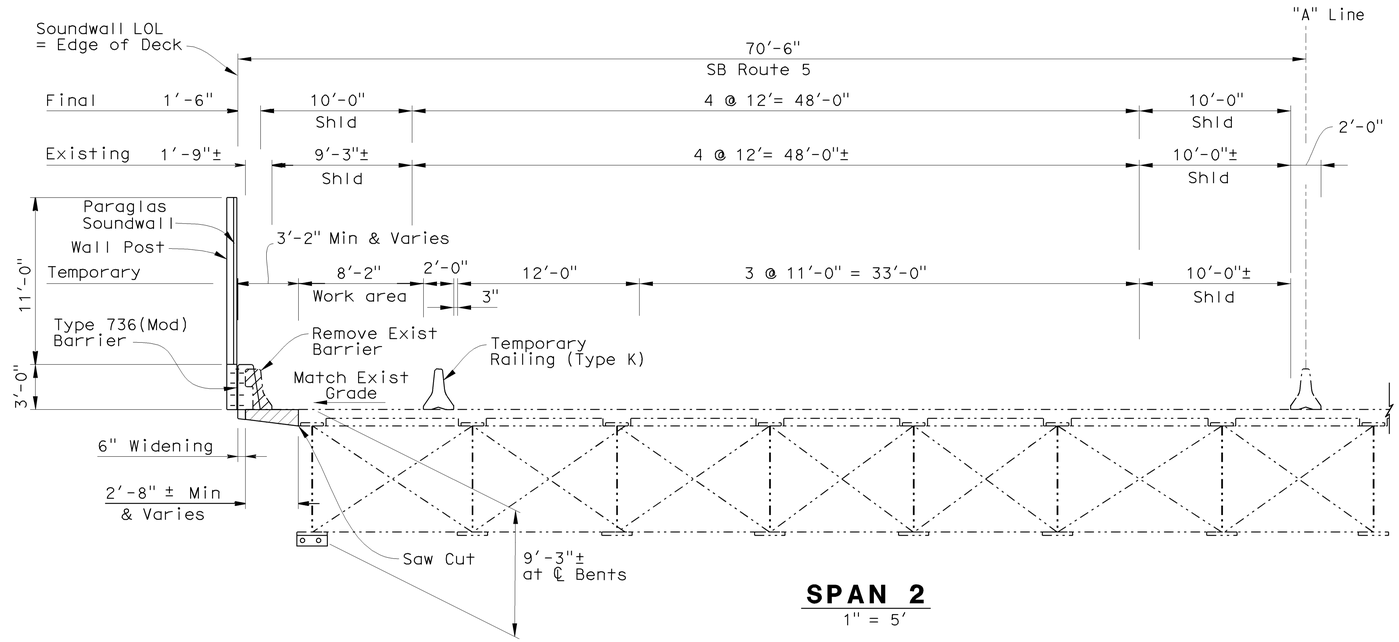

SPAN 2
1" = 5'

The Contractor shall field verify all controlling dimensions before ordering or fabrication of any material.

DESIGN OVERSIGHT Jon Hamaguchi
1-12-09
SIGN OFF DATE

	BY	CHECKED
DESIGN	Kotha S. Rao	Raul Fernandez
DETAILS	Aniket Parkhi	Kotha S. Rao
QUANTITIES	L. Fanchun	Kotha S. Rao

PREPARED FOR THE STATE OF CALIFORNIA DEPARTMENT OF TRANSPORTATION

Ashok Athalye
PROJECT ENGINEER

CU 12231
EA 0G9401

BRIDGE NO.	EL CAMINO REAL UC (SOUNDWALL)
55-0203	
POST MILE	CONSTRUCTION STAGING
1.6	

DESIGN DETAIL SHEET (ENGLISH) (REV. 2/25/05)

ORIGINAL SCALE IN INCHES FOR REDUCED PLANS 0 1 2 3

DISREGARD PRINTS BEARING EARLIER REVISION DATES →

REVISION DATES (PRELIMINARY STAGE ONLY): 9/23/08 11/18/08 12/23/08

SHEET 3 OF 23

FILE => 55-0203-c-cs01.dgn

USERNAME => tfcarol DATE PLOTTED => 30-MAR-2009 TIME PLOTTED => 08:56

DIST	COUNTY	ROUTE	POST MILES TOTAL PROJECT	SHEET No	TOTAL SHEETS
12	Ora	5	1.3/1.7	108	127

REGISTERED CIVIL ENGINEER — 1/6/2009 DATE

3-23-09
PLANS APPROVAL DATE

Ashok G.Athalye No. 34301 Exp. 9-30-2009 CIVIL — REGISTERED PROFESSIONAL ENGINEER — STATE OF CALIFORNIA

The State of California or its officers or agents shall not be responsible for the accuracy or completeness of electronic copies of this plan sheet.

OCTA
550 SOUTH MAIN ST.
ORANGE, CA 92863

ATHALYE CONSULTING ENGINEERING SERVICES,INC
26457 RANCHO PKWY S
LAKE FOREST, CA 92630

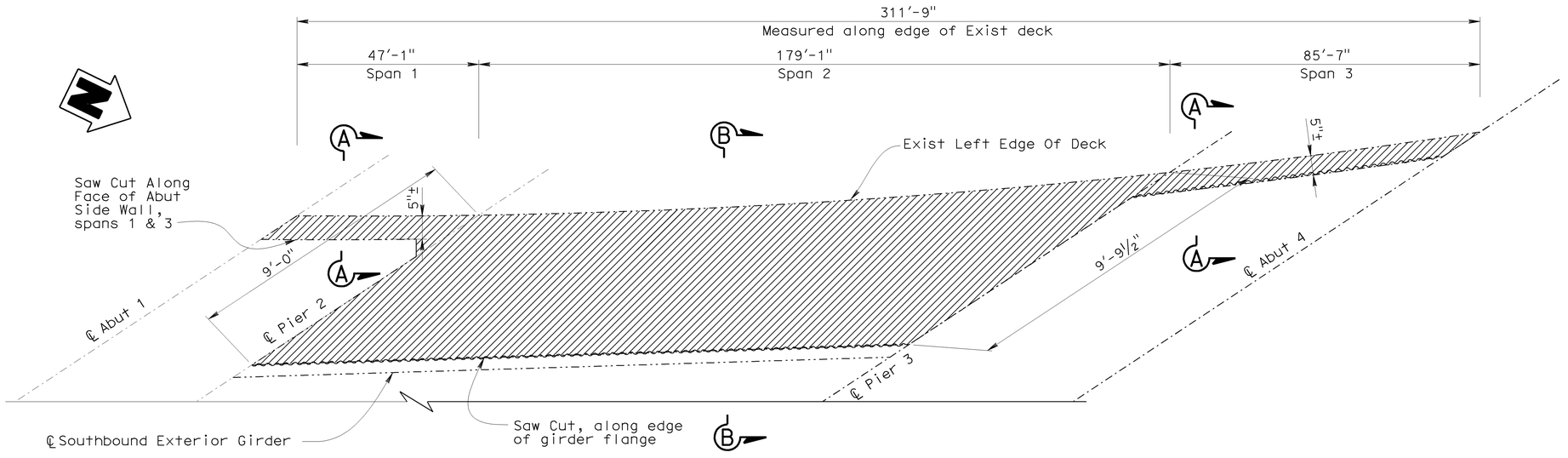

PART DECK PLAN
No Scale

LEGEND:

Existing Structure

Limits of Removal

Note:

All exist joint seals over abutments & piers to be protected in place and reused.

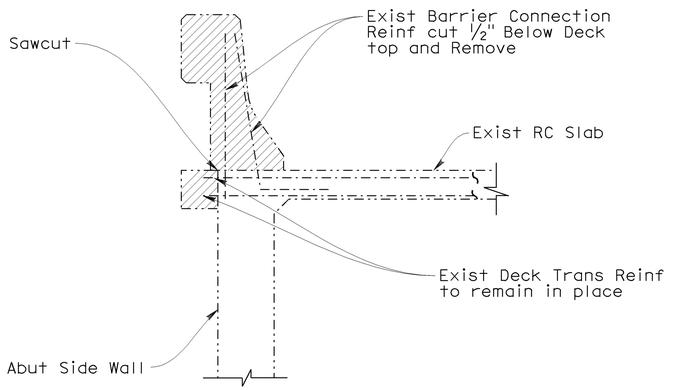

SECTION A-A
No Scale

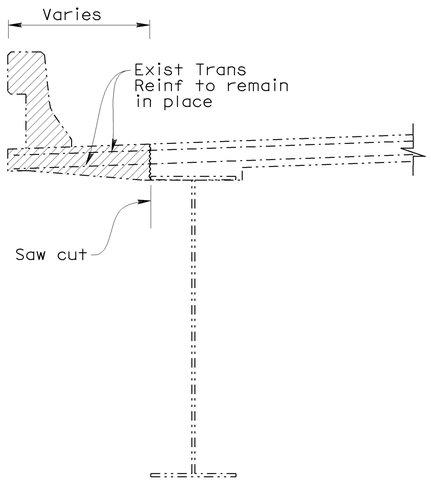

SECTION B-B
½" = 1'

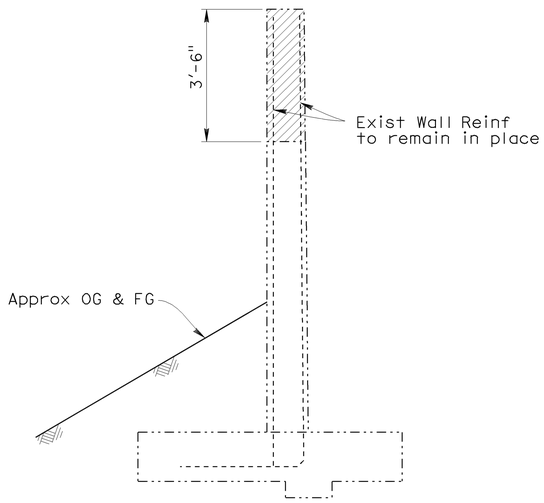

ABUTMENT 4 RETAINING WALL
½" = 1'

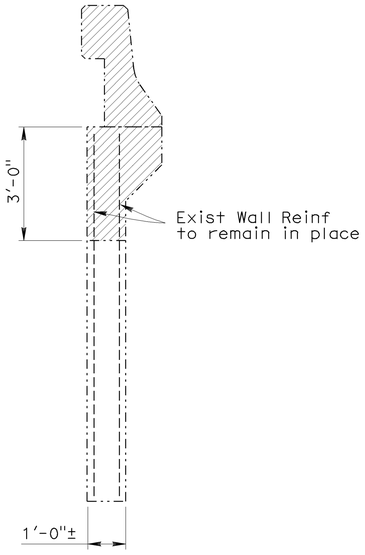

ABUTMENT 1 WINGWALL
½" = 1'

The Contractor shall field verify all controlling dimensions before ordering or fabrication of any material.

DESIGN OVERSIGHT Jon Hamaguchi
1-12-09
SIGN OFF DATE

	BY	CHECKED
DESIGN	Kotha S. Rao	Raul Fernandez
DETAILS	Aniket Parkhi	Kotha S. Rao
QUANTITIES	L. Fanchun	Kotha S. Rao

PREPARED FOR THE STATE OF CALIFORNIA DEPARTMENT OF TRANSPORTATION

Ashok Athalye
PROJECT ENGINEER

BRIDGE NO.	55-0203
POST MILE	1.6

EL CAMINO REAL UC (SOUNDWALL) BRIDGE REMOVAL

DESIGN DETAIL SHEET (ENGLISH) (REV. 2/25/05)

ORIGINAL SCALE IN INCHES FOR REDUCED PLANS 0 1 2 3

CU 12231
EA 0G9401

DISREGARD PRINTS BEARING EARLIER REVISION DATES →

REVISION DATES (PRELIMINARY STAGE ONLY): 3/23/08 | 11/24/08 | 12/23/08

SHEET 4 OF 23

FILE => 55-0203-d-br_det01.dgn

USERNAME => tfcorol DATE PLOTTED => 30-MAR-2009 TIME PLOTTED => 08:56

DIST	COUNTY	ROUTE	POST MILES TOTAL PROJECT	SHEET No	TOTAL SHEETS
12	Ora	5	1.3/1.7	109	127

REGISTERED CIVIL ENGINEER — 1/6/2009 DATE

Ashok G.Athalye No. 34301 Exp. 9-30-2009 CIVIL — REGISTERED PROFESSIONAL ENGINEER — STATE OF CALIFORNIA

3-23-09
PLANS APPROVAL DATE

The State of California or its officers or agents shall not be responsible for the accuracy or completeness of electronic copies of this plan sheet.

OCTA
550 SOUTH MAIN ST.
ORANGE, CA 92863

ATHALYE CONSULTING ENGINEERING SERVICES,INC
26457 RANCHO PKWY S
LAKE FOREST, CA 92630

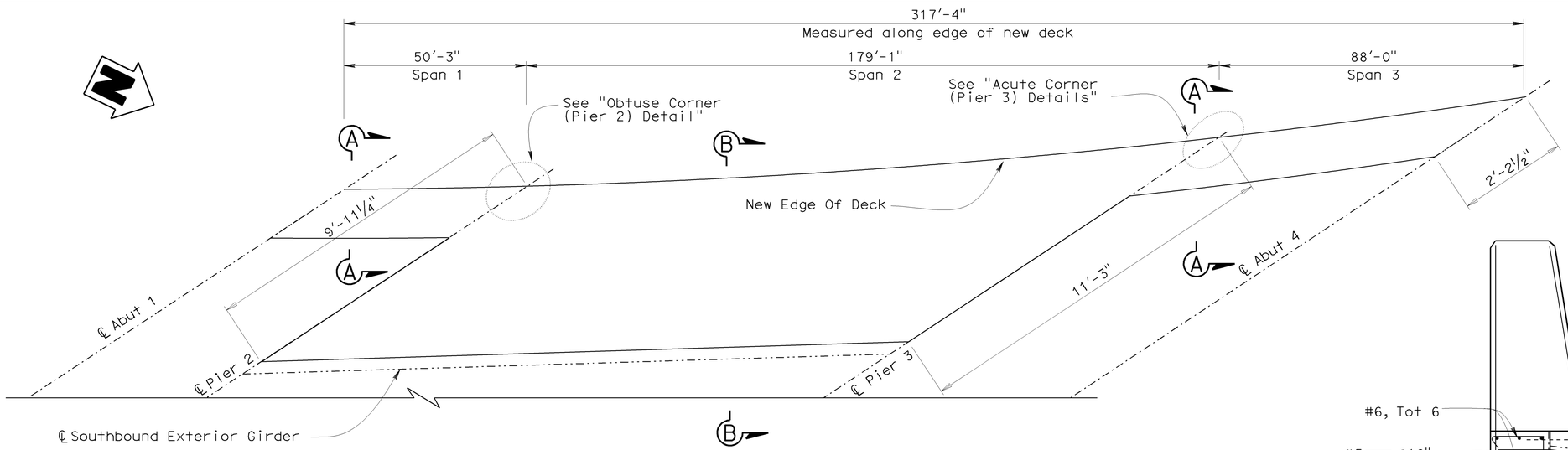

PART DECK PLAN
No Scale

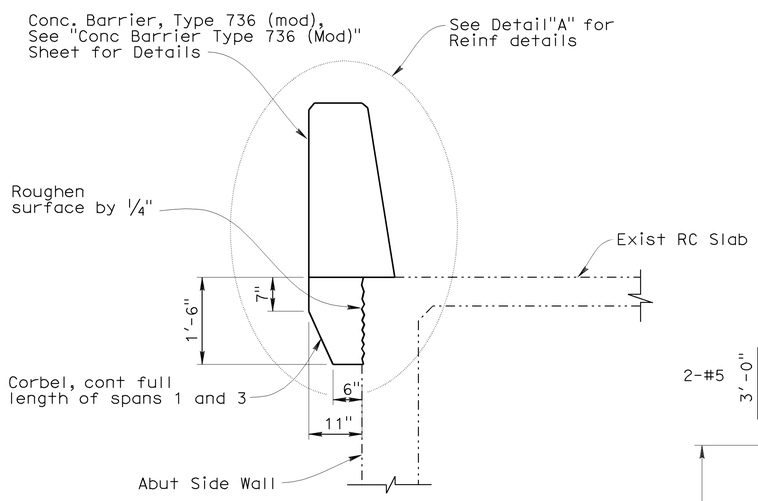

SECTION A-A
No Scale

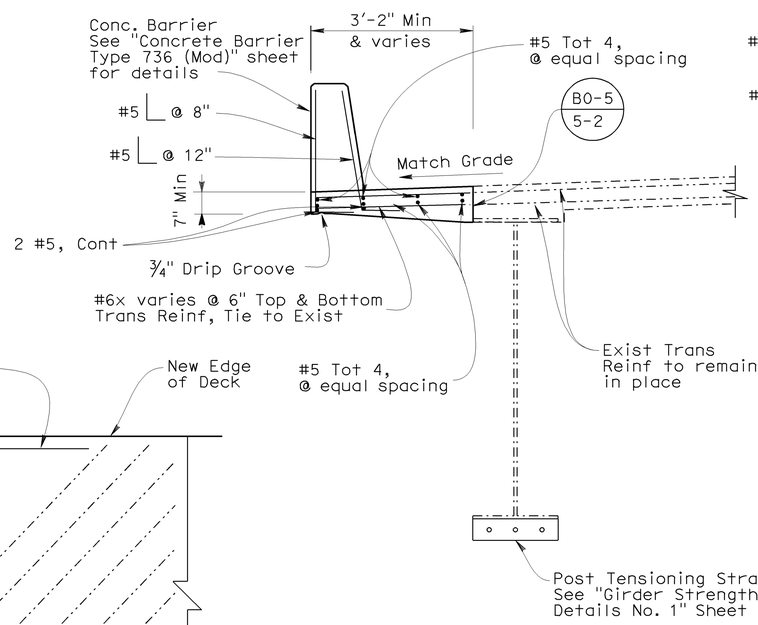

SECTION B-B
½" = 1'

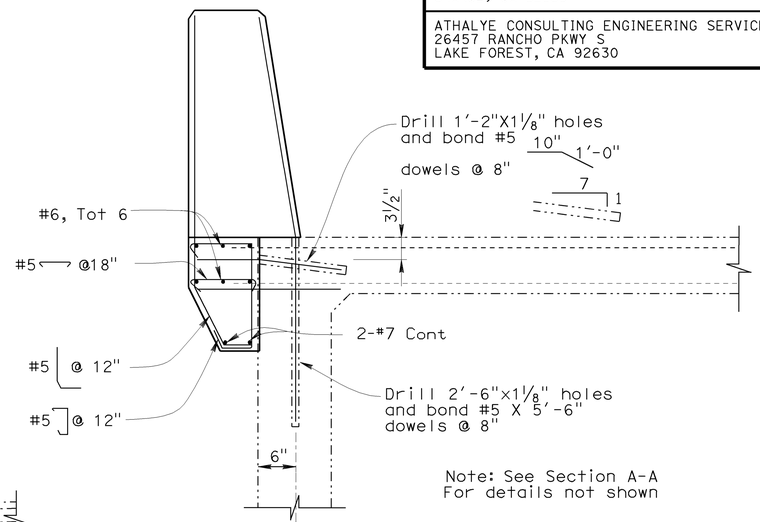

Note: See Section A-A For details not shown

DETAIL A
1" = 1' 0"

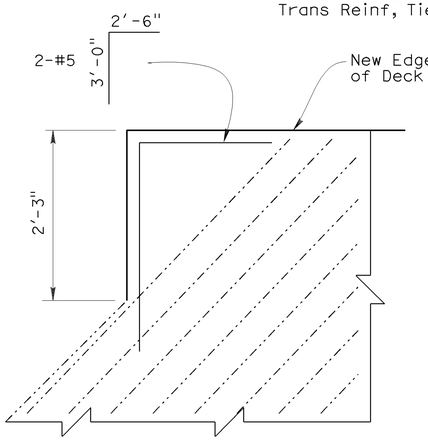

OBTUSE CORNER (PIER 2) DETAILS
No Scale

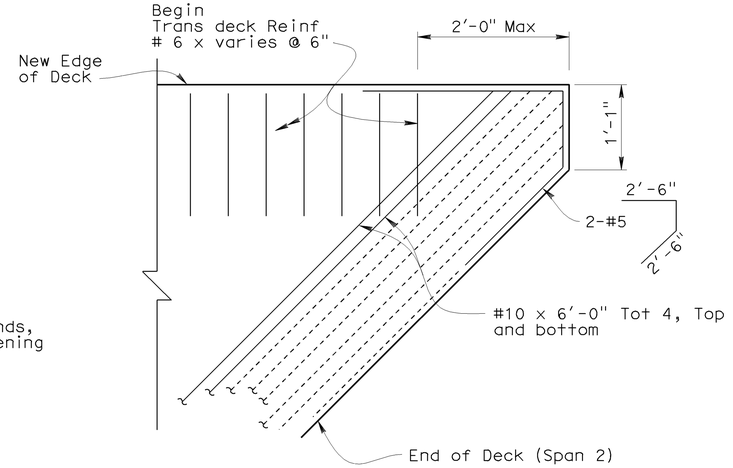

ACUTE CORNER (PIER 3) DETAILS
No Scale

Legend:

Existing Structure

New Construction

The Contractor shall field verify all controlling dimensions before ordering or fabrication of any material.

DESIGN OVERSIGHT Jon Hamaguchi
1-12-09
SIGN OFF DATE

	BY	CHECKED
DESIGN	L. Fanchun	Raul Fernandez
DETAILS	Aniket Parkhi	Raul Fernandez
QUANTITIES	L. Fanchun	Kotha S. Rao

PREPARED FOR THE STATE OF CALIFORNIA DEPARTMENT OF TRANSPORTATION

Ashok Athalye
PROJECT ENGINEER

CU 12231
EA 0G9401

BRIDGE NO.	55-0203
POST MILE	1.6

EL CAMINO REAL UC (SOUNDWALL)
DECK MODIFICATION DETAILS

DESIGN DETAIL SHEET (ENGLISH) (REV. 2/25/05)

ORIGINAL SCALE IN INCHES FOR REDUCED PLANS 0 1 2 3

DISREGARD PRINTS BEARING EARLIER REVISION DATES → REVISION DATES (PRELIMINARY STAGE ONLY) 9/28/08 11/18/08 12/23/08

SHEET 5 OF 23

FILE => 55-0203-d-dm_det.dgn

USERNAME => tfcopro DATE PLOTTED => 30-MAR-2009 TIME PLOTTED => 08:56

DIST	COUNTY	ROUTE	POST MILES TOTAL PROJECT	SHEET No	TOTAL SHEETS
12	Ora	5	1.3/1.7	110	127

REGISTERED CIVIL ENGINEER — 1/6/2009 DATE

3-23-09
PLANS APPROVAL DATE

REGISTERED PROFESSIONAL ENGINEER — Ashok G.Athalye No. 34301 Exp. 9-30-2009 CIVIL — STATE OF CALIFORNIA

The State of California or its officers or agents shall not be responsible for the accuracy or completeness of electronic copies of this plan sheet.

OCTA
550 SOUTH MAIN ST.
ORANGE, CA 92863

ATHALYE CONSULTING ENGINEERING SERVICES,INC
26457 RANCHO PKWY S
LAKE FOREST, CA 92630

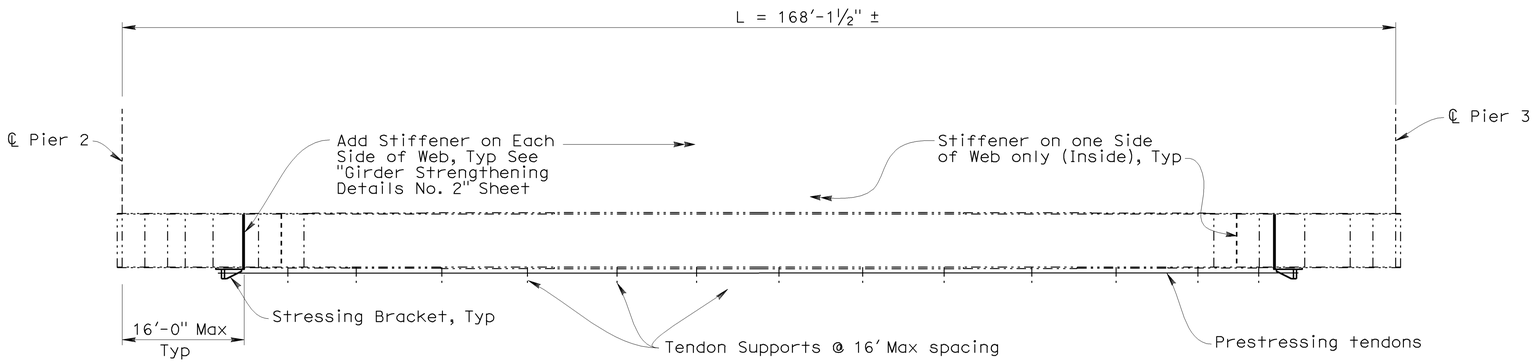

GIRDER ELEVATION

1" = 10'

NOTES:

1. All brackets, anchorages, and grout caps to be galvanized & painted.
2. Threads shall be excluded from the shear plane for the HS bolts.
3. Tendon support brackets to be placed as to provide a straight line between P/S anchorage brackets.
4. Secure steel pipes to U-bolts with a stainless steel hose clamp.

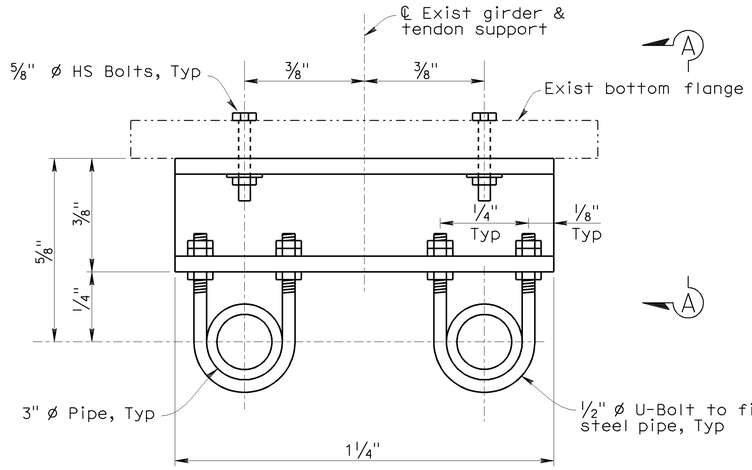

ELEVATION

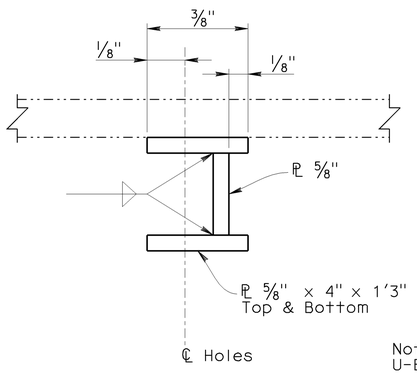

Note:
U-Bolts and High Strength bolts not shown for clarity

VIEW A-A

TENDON SUPPORT DETAIL

No Scale

PRESTRESSING NOTES

WORKING FORCE:

Pf = the total force remaining after all losses including those due to creep of steel.

As = Pf / (.70x270.0- Δp)

Pf = 750 Kips

ΔP = Total prestress losses, Ksi

The loss in stress in prestressing steel due to creep shall be assumed to be 5.0 Ksi

Effective Stress = 0.7 fu - assumed losses.

In addition to the losses noted above provisions shall be made for losses due to anchorage take-up and any other losses peculiar to the system of prestressing used.

PRESTRESSING STEEL:
The tendons on both sides of the girders are to be stressed simultaneously (one end stressing).

Tendons are to be installed in 3" Dia galvanized steel pipe as shown on the plans and grouted after stressing.

The Contractor shall field verify all controlling dimensions before ordering or fabrication of any material.

DESIGN OVERSIGHT — Jon Hamaguchi
1-12-09
SIGN OFF DATE

	BY	CHECKED
DESIGN	Kotha S. Rao	Raul Fernandez
DETAILS	Aniket Parkhi	Kotha S. Rao
QUANTITIES	L. Fanchun	Kotha S. Rao

PREPARED FOR THE STATE OF CALIFORNIA DEPARTMENT OF TRANSPORTATION

Ashok Athalye
PROJECT ENGINEER

CU 12231
EA 0G9401

BRIDGE NO. 55-0203
POST MILE 1.6

EL CAMINO REAL UC (SOUNDWALL)

GIRDER STRENGTHENING DETAILS NO.1

DESIGN DETAIL SHEET (ENGLISH) (REV. 2/25/05)

ORIGINAL SCALE IN INCHES FOR REDUCED PLANS 0 1 2 3

DISREGARD PRINTS BEARING EARLIER REVISION DATES →

REVISION DATES (PRELIMINARY STAGE ONLY): 9/23/08 | 11/26/08 | 12/23/08

SHEET 6 OF 23

FILE => 55-0203-1-gir_det01.dgn

USERNAME => trcarol DATE PLOTTED => 30-MAR-2009 TIME PLOTTED => 08:56

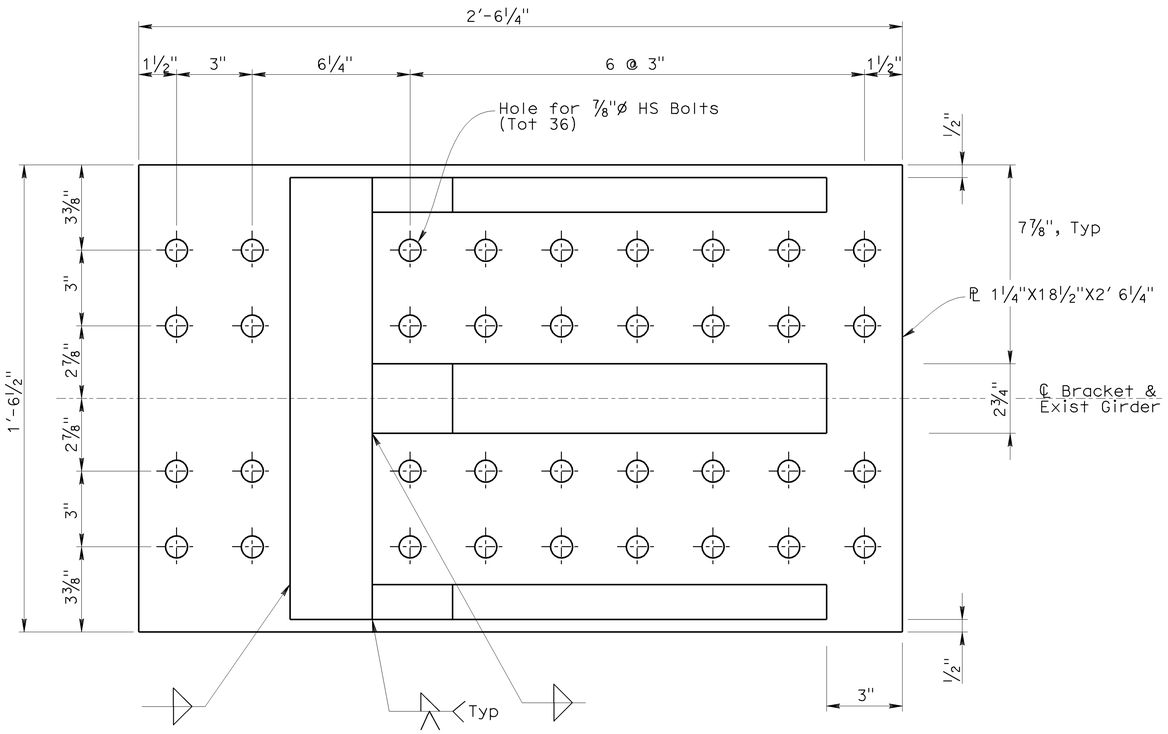

VIEW B-B
No Scale

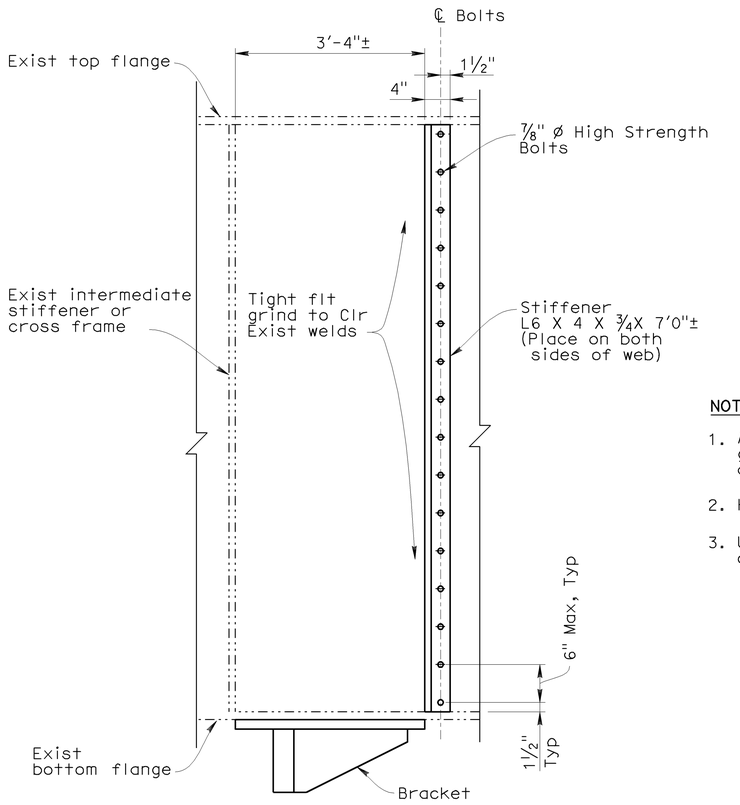

STIFFENER DETAIL
No Scale

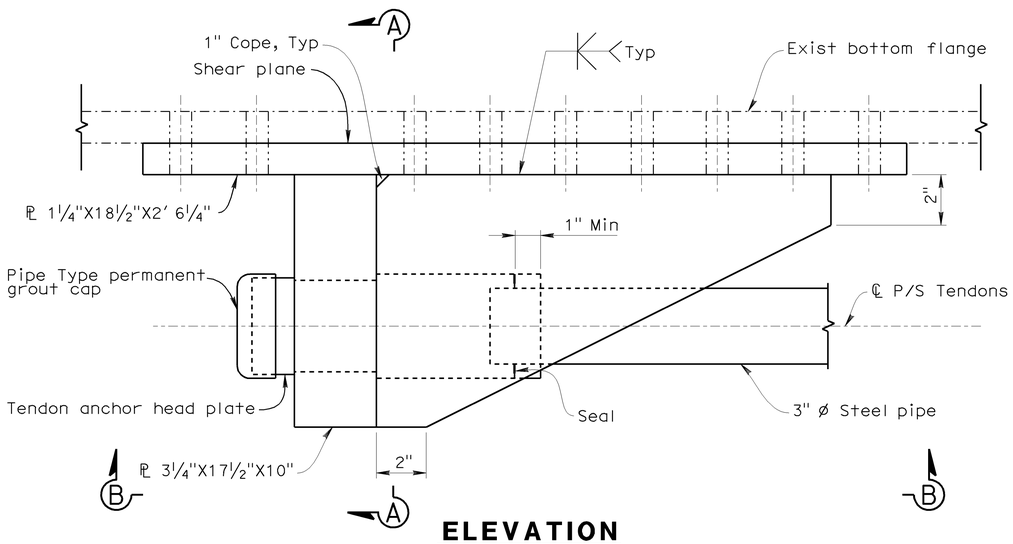

ELEVATION
No Scale

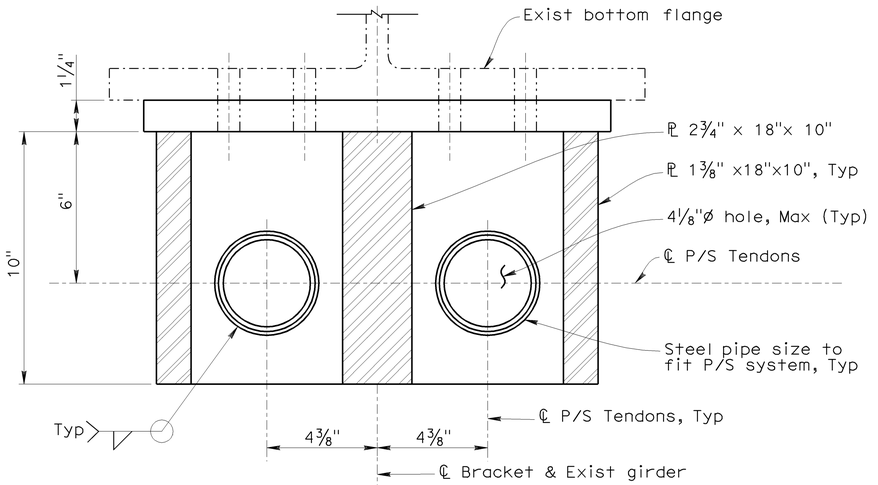

SECTION A-A
No Scale

The Contractor shall field verify all controlling dimensions before ordering or fabrication of any material.

DIST	COUNTY	ROUTE	POST MILES TOTAL PROJECT	SHEET No	TOTAL SHEETS
12	Ora	5	1.3/1.7	111	127

REGISTERED CIVIL ENGINEER — 1/6/2009 DATE

Ashok G. Athalye No. 34301 Exp. 9-30-2009 CIVIL — REGISTERED PROFESSIONAL ENGINEER — STATE OF CALIFORNIA

3-23-09
PLANS APPROVAL DATE

The State of California or its officers or agents shall not be responsible for the accuracy or completeness of electronic copies of this plan sheet.

OCTA
550 SOUTH MAIN ST.
ORANGE, CA 92863

ATHALYE CONSULTING ENGINEERING SERVICES,INC
26457 RANCHO PKWY S
LAKE FOREST, CA 92630

NOTES:

1. All brackets, anchorages, and grout caps shall be galvanized and painted
2. HS Bolts not shown for clarity.
3. Use ½" weld, unless shown otherwise.

DESIGN OVERSIGHT Jon Hamaguchi
1-12-09
SIGN OFF DATE

DESIGN DETAIL SHEET (ENGLISH) (REV. 2/25/05)

	BY	CHECKED
DESIGN	L. Fanchun	Kotha S. Rao
DETAILS	Aniket Parkhi	Kotha S. Rao
QUANTITIES	L. Fanchun	Kotha S. Rao

ORIGINAL SCALE IN INCHES FOR REDUCED PLANS 0 1 2 3

PREPARED FOR THE STATE OF CALIFORNIA DEPARTMENT OF TRANSPORTATION

Ashok Athalye
PROJECT ENGINEER

CU 12231
EA 0G9401

FILE => 55-0203-1-gir_det02.dgn

BRIDGE NO. 55-0203
POST MILE 1.6

EL CAMINO REAL UC (SOUNDWALL)
GIRDER STRENGTHENING DETAILS NO.2

DISREGARD PRINTS BEARING EARLIER REVISION DATES

REVISION DATES (PRELIMINARY STAGE ONLY): 9/23/08 | 11/18/08 | 12/23/08

SHEET 7 OF 23

USERNAME => ttcorol DATE PLOTTED => 30-MAR-2009 TIME PLOTTED => 08:56

DIST	COUNTY	ROUTE	POST MILES TOTAL PROJECT	SHEET No	TOTAL SHEETS
12	Ora	5	1.3/1.7	112	127

REGISTERED CIVIL ENGINEER — 1/6/2009 DATE

Ashok G. Athalye No. 34301 Exp. 9-30-2009 CIVIL — REGISTERED PROFESSIONAL ENGINEER — STATE OF CALIFORNIA

3-23-09
PLANS APPROVAL DATE

The State of California or its officers or agents shall not be responsible for the accuracy or completeness of electronic copies of this plan sheet.

OCTA
550 SOUTH MAIN ST.
ORANGE, CA 92863

ATHALYE CONSULTING ENGINEERING SERVICES,INC
26457 RANCHO PKWY S
LAKE FOREST, CA 92630

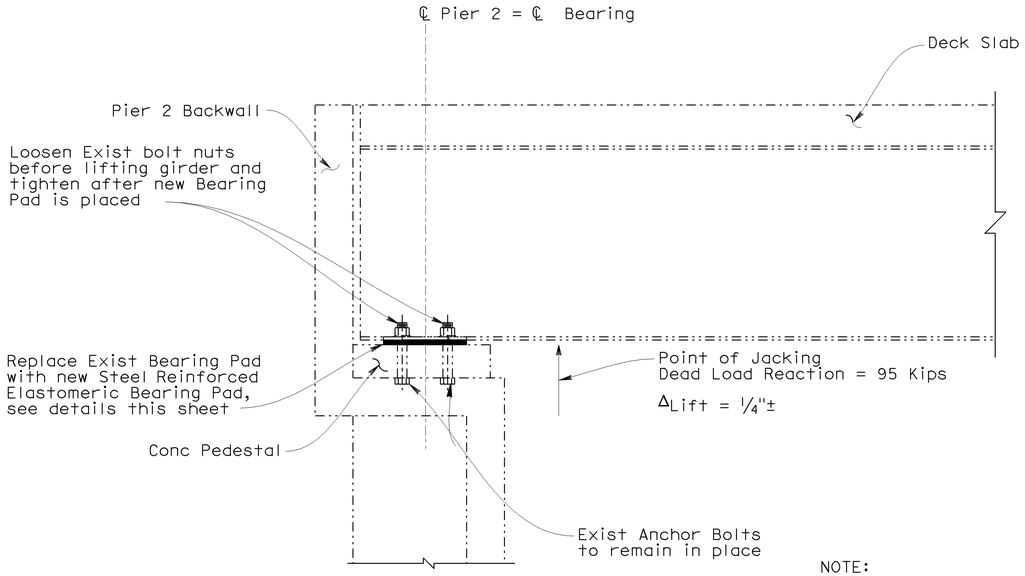

PART ELEVATION

No Scale

NOTE:

Southbound exterior girder bearing pad to be replaced at Pier 2 only.

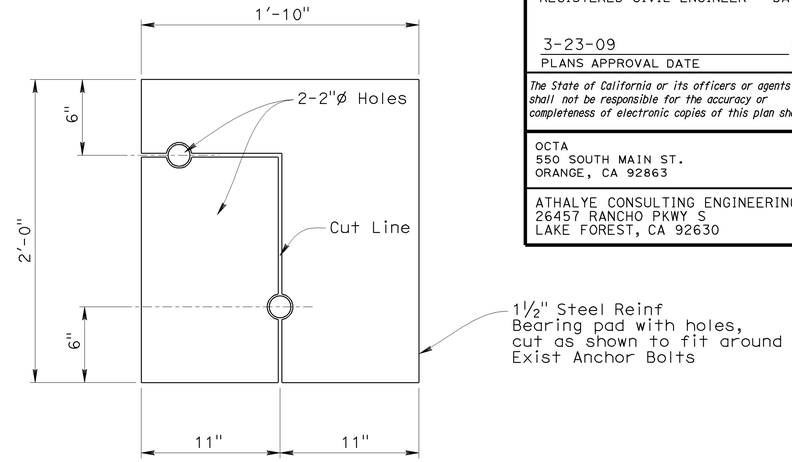

ELASTOMERIC BEARING PAD DETAIL

½"=1'

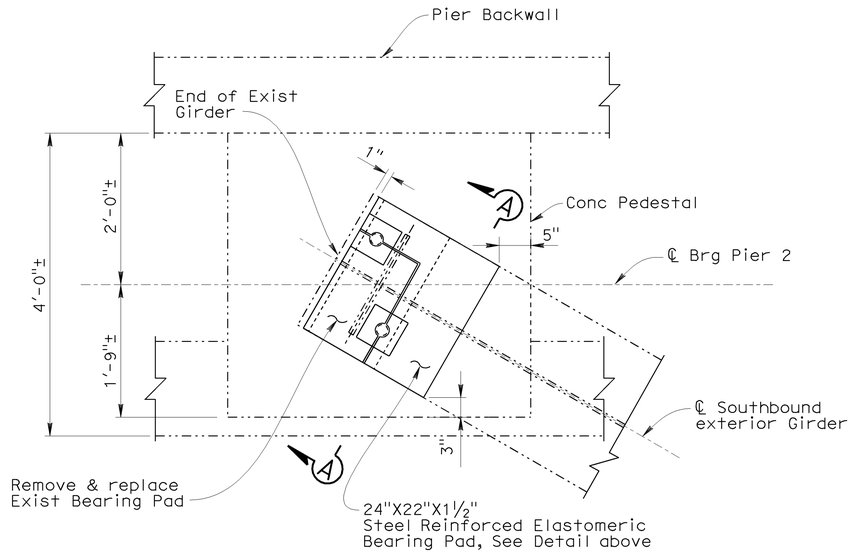

PLAN

1"=1'

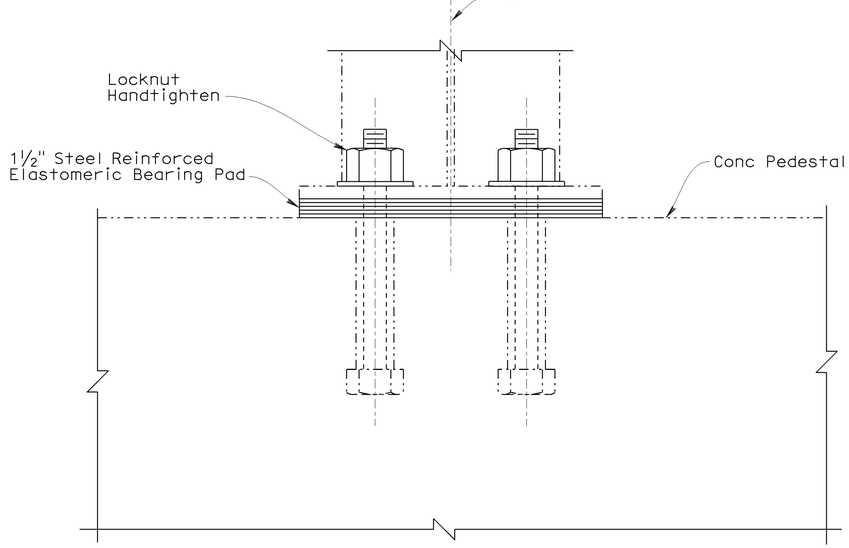

SECTION A-A

½"=1'

The Contractor shall field verify all controlling dimensions before ordering or fabrication of any material.

Jon Hamaguchi
DESIGN OVERSIGHT Jon Hamaguchi
1-12-09
SIGN OFF DATE

	BY	CHECKED
DESIGN	Kotha S. Rao	Raul Fernandez
DETAILS	Aniket Parkhi	Kotha S. Rao
QUANTITIES	L. Fanchun	Kotha S. Rao

PREPARED FOR THE STATE OF CALIFORNIA DEPARTMENT OF TRANSPORTATION

Ashok Athalye
PROJECT ENGINEER

BRIDGE NO.	EL CAMINO REAL UC (SOUNDWALL)
55-0203	
POST MILE	BEARING PAD REPLACEMENT DETAILS
1.6	

CU 12231
EA 0G9401

DESIGN DETAIL SHEET (ENGLISH) (REV. 2/25/05)

ORIGINAL SCALE IN INCHES FOR REDUCED PLANS 0 1 2 3

DISREGARD PRINTS BEARING EARLIER REVISION DATES →

REVISION DATES (PRELIMINARY STAGE ONLY): 9/28/08 | 11/18/08 | 12/23/08

SHEET 8 OF 23

FILE => 55-0203-p-bpr_det01.dgn

USERNAME => rrmikesi DATE PLOTTED => 30-MAR-2009 TIME PLOTTED => 10:48

DIST	COUNTY	ROUTE	POST MILES TOTAL PROJECT	SHEET No	TOTAL SHEETS
12	Ora	5	1.3/1.7	113	127

REGISTERED CIVIL ENGINEER — 1/6/2009 DATE

Ashok G.Athalye No. 34301 Exp. 9-30-2009 CIVIL — REGISTERED PROFESSIONAL ENGINEER — STATE OF CALIFORNIA

3-23-09
PLANS APPROVAL DATE

The State of California or its officers or agents shall not be responsible for the accuracy or completeness of electronic copies of this plan sheet.

OCTA
550 SOUTH MAIN ST.
ORANGE, CA 92863

ATHALYE CONSULTING ENGINEERING SERVICES,INC
26457 RANCHO PKWY S
LAKE FOREST, CA 92630

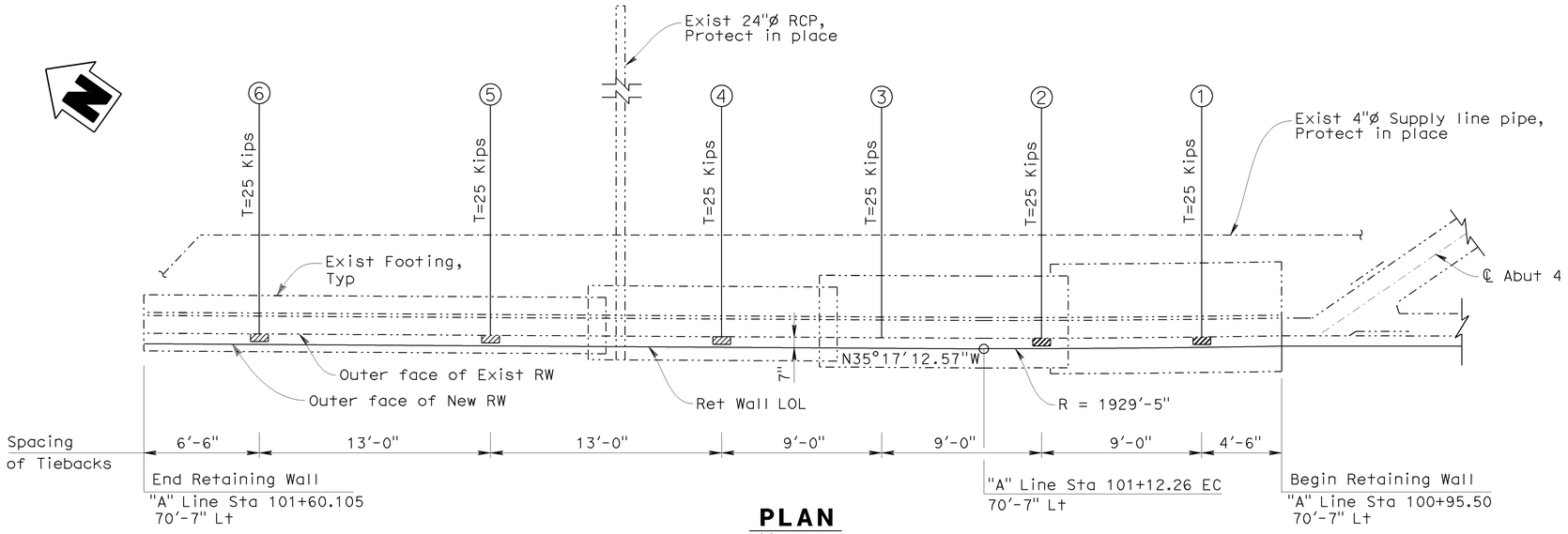

PLAN
1/4"=1'-0"

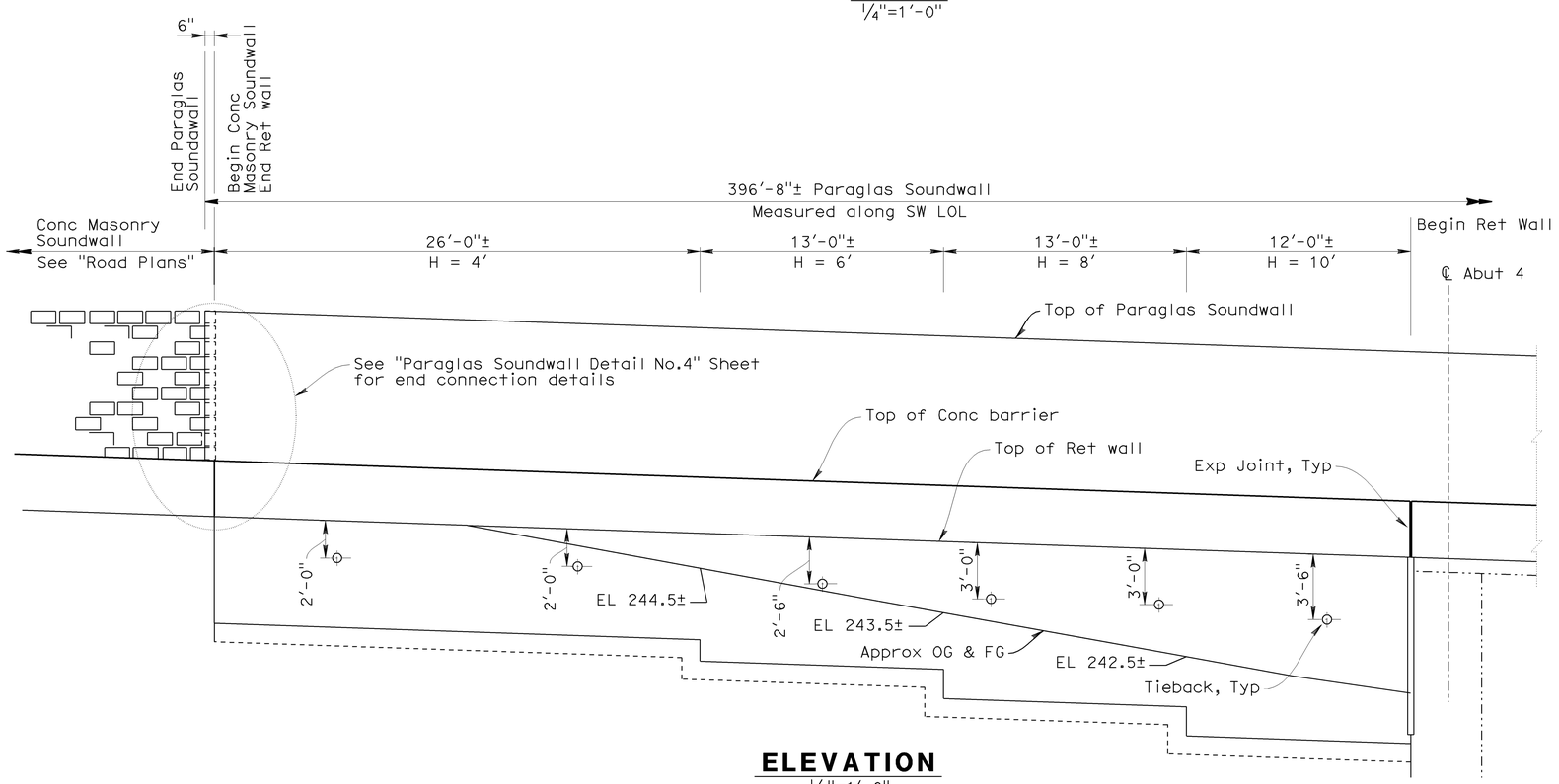

ELEVATION
1/4"=1'-0"

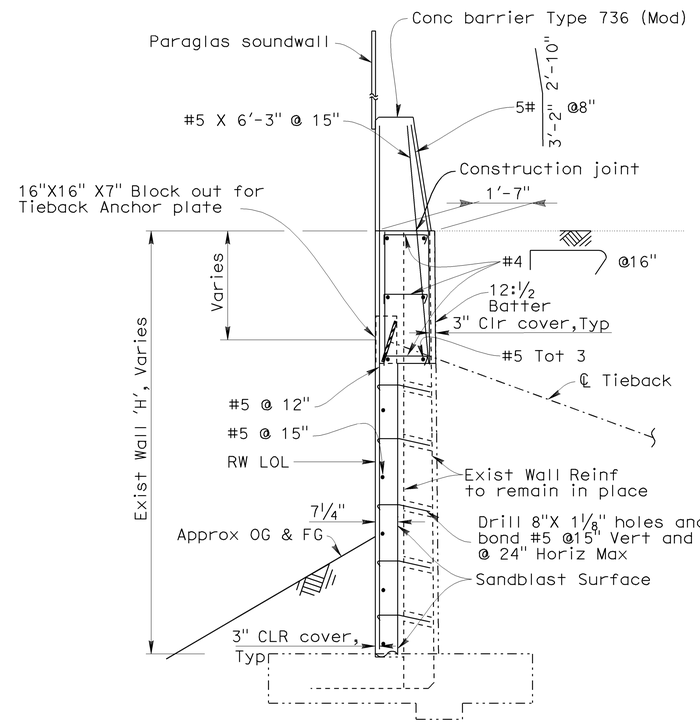

TYPICAL SECTION
1/2"=1'-0"

The Contractor shall field verify all controlling dimensions before ordering or fabrication of any material.

LEGEND

Existing work

New construction

DESIGN	BY Kotha S. Rao	CHECKED Raul Fernandez	PREPARED FOR THE STATE OF CALIFORNIA DEPARTMENT OF TRANSPORTATION
DETAILS	BY Aniket Parkhi	CHECKED Kotha S. Rao	
QUANTITIES	BY L. Fanchun	CHECKED Kotha S. Rao	

Jon Hamaguchi
DESIGN OVERSIGHT — Jon Hamaguchi
1-12-09
SIGN OFF DATE

Ashok Athalye
PROJECT ENGINEER

CU 12231
EA 0G9401

BRIDGE NO. 55-0203
POST MILE 1.6

EL CAMINO REAL UC (SOUNDWALL)
RW STRENGTHENING DETAILS NO.1

DESIGN DETAIL SHEET (ENGLISH) (REV. 2/25/05)

ORIGINAL SCALE IN INCHES FOR REDUCED PLANS 0 1 2 3

DISREGARD PRINTS BEARING EARLIER REVISION DATES

REVISION DATES (PRELIMINARY STAGE ONLY): 9/28/08 11/18/08 12/23/08

SHEET 9 OF 23

FILE => 55-0203-g-rws_det01.dgn

USERNAME => ttrimble1 DATE PLOTTED => 30-MAR-2009 TIME PLOTTED => 10:48

DIST	COUNTY	ROUTE	POST MILES TOTAL PROJECT	SHEET No	TOTAL SHEETS
12	Ora	5	1.3/1.7	114	127

REGISTERED CIVIL ENGINEER — 1/6/2009 DATE

3-23-09
PLANS APPROVAL DATE

REGISTERED PROFESSIONAL ENGINEER — Ashok G.Athalye — No. 34301 — Exp. 9-30-2009 — CIVIL — STATE OF CALIFORNIA

The State of California or its officers or agents shall not be responsible for the accuracy or completeness of electronic copies of this plan sheet.

OCTA
550 SOUTH MAIN ST.
ORANGE, CA 92863

ATHALYE CONSULTING ENGINEERING SERVICES,INC
26457 RANCHO PKWY S
LAKE FOREST, CA 92630

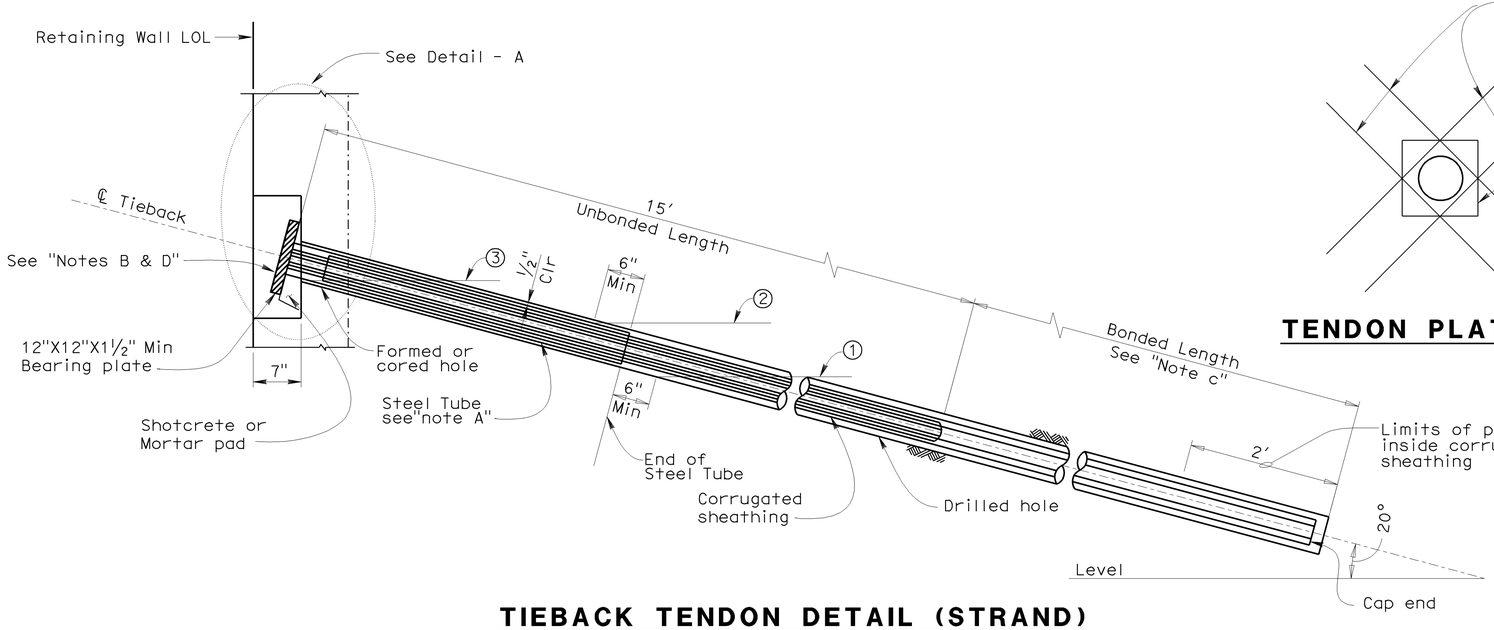

TIEBACK TENDON DETAIL (STRAND)

No Scale

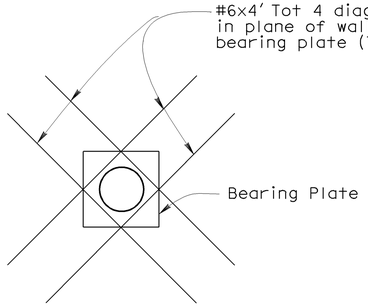

TENDON PLATE REINFORCING DETAIL

No Scale

TYPICAL SECTION

No Scale

The Contractor shall field verify all controlling dimensions before ordering or fabrication of any material.

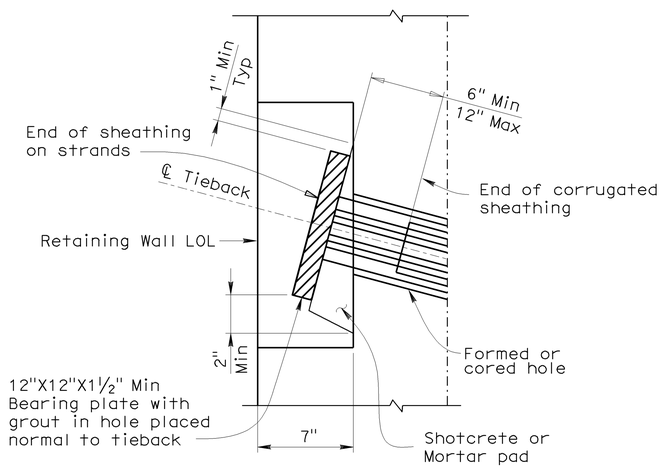

DETAIL - A

No Scale

LEGEND:

① Level of initial grouting.

② Level of secondary grouting.

③ Level of initial grout inside corrugated sheathing.

NOTES:

A. Steel tube welded to bearing plate (Min length = 8" Min thickness=1/4" Galvanize assembly after fabrication).

B. 2" Minimum concrete cover over Tieback anchorage & tendon.

C. The bonded length shall be determined by the Contractor & subject to the Engineer's approval.

D. Tendon anchorage assembly not shown.

Prestressing Steel (Tiebacks) :

Prestressing strands - ASTM A416
T = Design force per tieback (25 kips)
See "Retaining Wall Strengthening Details No. 1" Sheet"

f_{pu} = Ultimate strength of PS steel 270 ksi

A_s = Minimum cross sectional Area of Prestressing steel (in^2)

$A_s = T / (0.7f_{pu} - Losses)$

Soil parameters :

Friction Angle, ø = 33°
Soil density, r = 125 pcf

DESIGN OVERSIGHT — Jon Hamaguchi

1-12-09
SIGN OFF DATE

	BY	CHECKED
DESIGN	Kotha S. Rao	Raul Fernandez
DETAILS	Aniket Parkhi	Kotha S. Rao
QUANTITIES	L. Fanchun	Kotha S. Rao

PREPARED FOR THE STATE OF CALIFORNIA DEPARTMENT OF TRANSPORTATION

Ashok Athalye
PROJECT ENGINEER

CU 12231
EA 0G9401

BRIDGE NO.	EL CAMINO REAL UC (SOUNDWALL)
55-0203	
POST MILE	RW STRENGTHENING DETAILS NO.2
1.6	

DESIGN DETAIL SHEET (ENGLISH) (REV. 2/25/05)

ORIGINAL SCALE IN INCHES FOR REDUCED PLANS 0 1 2 3

DISREGARD PRINTS BEARING EARLIER REVISION DATES →

REVISION DATES (PRELIMINARY STAGE ONLY)										SHEET	OF
9/23/08	11/18/08	12/23/08								10	23

FILE => 55-0203-g-rws_det02.dgn

USERNAME => trmikesl DATE PLOTTED => 30-MAR-2009 TIME PLOTTED => 10:48

DIST	COUNTY	ROUTE	POST MILES TOTAL PROJECT	SHEET No	TOTAL SHEETS
12	Ora	5	1.3/1.7	115	127

REGISTERED CIVIL ENGINEER — 1/6/2009 DATE

Ashok G.Athalye No. 34301 Exp. 9-30-2009 CIVIL — REGISTERED PROFESSIONAL ENGINEER — STATE OF CALIFORNIA

3-23-09
PLANS APPROVAL DATE

The State of California or its officers or agents shall not be responsible for the accuracy or completeness of electronic copies of this plan sheet.

OCTA
550 SOUTH MAIN ST.
ORANGE, CA 92863

ATHALYE CONSULTING ENGINEERING SERVICES,INC
26457 RANCHO PKWY S
LAKE FOREST, CA 92630

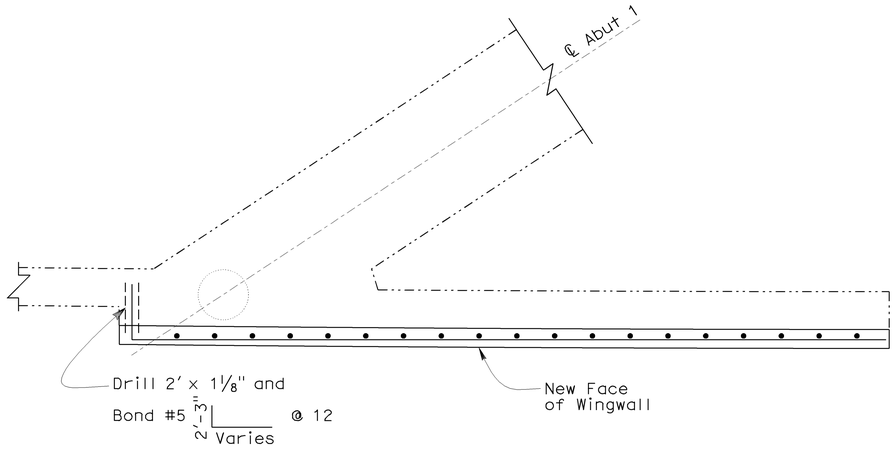

PLAN
½" = 1'

Note:
Exist Wall Reinf Not SHown

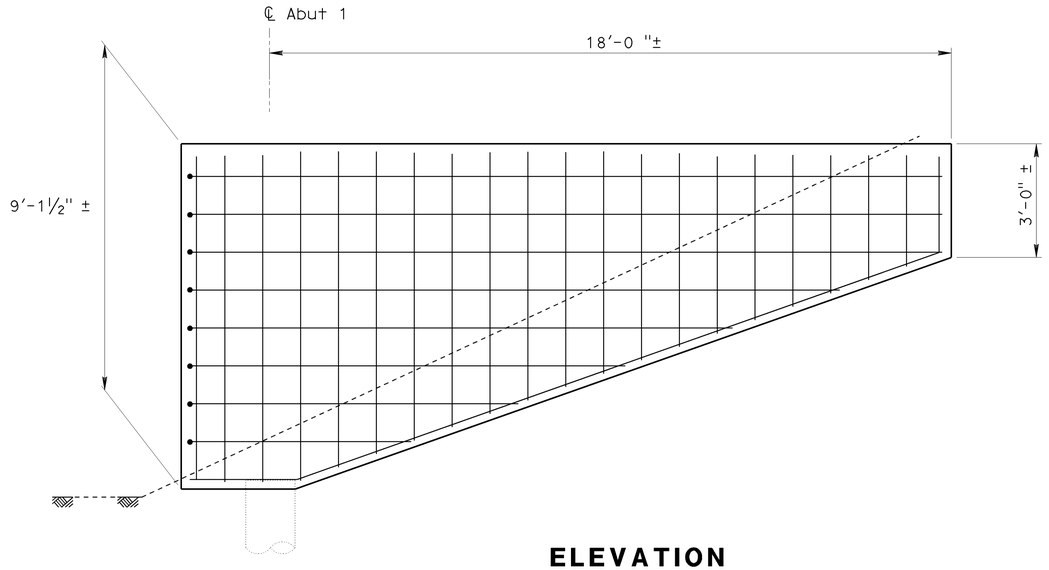

ELEVATION
½" = 1'

LEGEND

——— Indicates New Construction.
–·–·–·– Indicates Exist Structure.

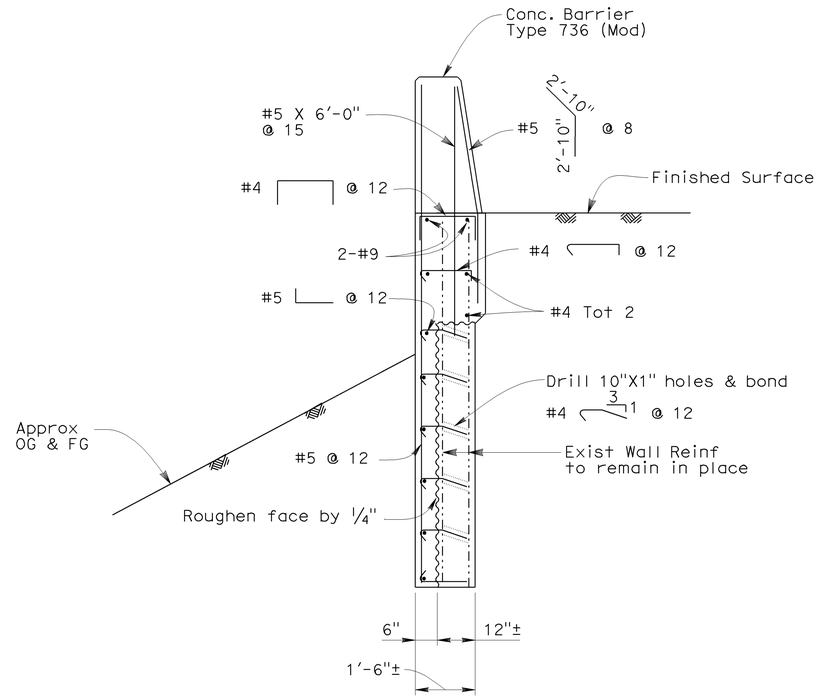

TYPICAL SECTION
½" = 1'

The Contractor shall field verify all controlling dimensions before ordering or fabrication of any material.

DESIGN OVERSIGHT Jon Hamaguchi	DESIGN	BY Kotha S. Rao	CHECKED Raul Fernandez
1-12-09 SIGN OFF DATE	DETAILS	BY Aniket Parkhi	CHECKED Kotha S. Rao
DESIGN DETAIL SHEET (ENGLISH) (REV. 2/25/05)	QUANTITIES	BY L. Fanchun	CHECKED Kotha S. Rao

PREPARED FOR THE STATE OF CALIFORNIA DEPARTMENT OF TRANSPORTATION

Ashok Athalye
PROJECT ENGINEER

ORIGINAL SCALE IN INCHES FOR REDUCED PLANS 0 1 2 3

CU 12231
EA 0G9401

BRIDGE NO.	EL CAMINO REAL UC (SOUNDWALL)
55-0203	
POST MILE	WINGWALL MODIFICATION DETAILS
1.6	

DISREGARD PRINTS BEARING EARLIER REVISION DATES →

REVISION DATES (PRELIMINARY STAGE ONLY): 9/28/08 11/18/08

SHEET 11 OF 23

FILE => 55-0203-g-wwm-det.dgn

USERNAME => trmikesl DATE PLOTTED => 30-MAR-2009 TIME PLOTTED => 10:48

DIST	COUNTY	ROUTE	POST MILES TOTAL PROJECT	SHEET No	TOTAL SHEETS
12	Ora	5	1.3/1.7	116	127

REGISTERED CIVIL ENGINEER — 1/6/2009 DATE

Ashok G.Athalye No. 34301 Exp. 9-30-2009 CIVIL — REGISTERED PROFESSIONAL ENGINEER — STATE OF CALIFORNIA

3-23-09
PLANS APPROVAL DATE

The State of California or its officers or agents shall not be responsible for the accuracy or completeness of electronic copies of this plan sheet.

OCTA
550 SOUTH MAIN ST.
ORANGE, CA 92863

ATHALYE CONSULTING ENGINEERING SERVICES,INC
26457 RANCHO PKWY S
LAKE FOREST, CA 92630

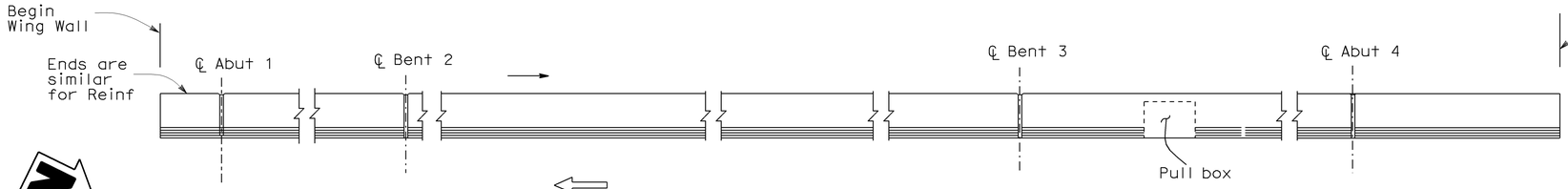

PLAN
No Scale

Legend:
- Existing Structure
- New Construction

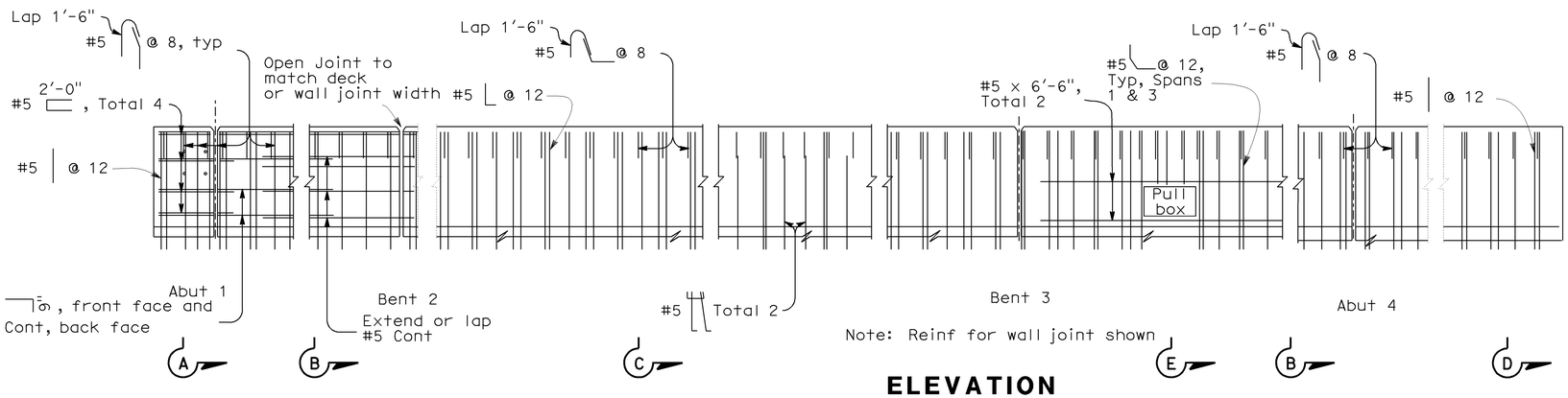

Note: Reinf for wall joint shown

ELEVATION
No Scale

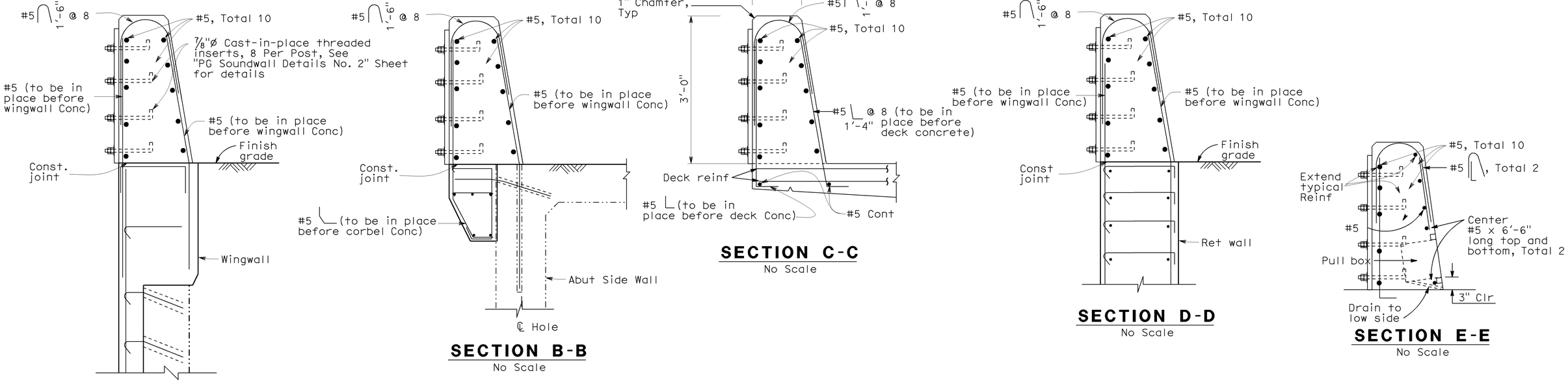

SECTION A-A
No Scale

SECTION B-B
No Scale

SECTION C-C
No Scale

SECTION D-D
No Scale

SECTION E-E
No Scale

The Contractor shall field verify all controlling dimensions before ordering or fabrication of any material.

NOTES:

A. Walls are to be backfilled before barrier is placed.

B. Clearance to reinforcing steel in barrier to be 1", except as noted. Longitudinal reinforcement to stop at all expansion joints.

C. See "Electrical Plan" for number & locations of pull boxes.

D. Dimensions may vary with roadway cross slope and with certain thickness of surfacing. See Project Plans.

E. See Standard Plans ES-9A, ES-9B, ES-9C, ES-9D and ES-9E for electrical details.

F. Minimum concrete edge distance to the reinforcing shown, shall be maintained. Edge distance may be adjusted to accommodate increase in concrete cover for architectual treatment.

G. Exist wingwall and Ret wall not shown for clarity

Jon Hamaguchi
DESIGN OVERSIGHT — Jon Hamaguchi
1-12-09
SIGN OFF DATE

	BY	CHECKED
DESIGN	Kotha S. Rao	Raul Fernandez
DETAILS	Aniket Parkhi	Kotha S. Rao
QUANTITIES	L. Fanchun	Kotha S. Rao

PREPARED FOR THE STATE OF CALIFORNIA
DEPARTMENT OF TRANSPORTATION

Ashok Athalye
PROJECT ENGINEER

CU 12231
EA 0G9401

BRIDGE NO. 55-0203
POST MILE 1.6

EL CAMINO REAL UC (SOUNDWALL)
CONCRETE BARRIER TYPE 736(MOD)

DESIGN DETAIL SHEET (ENGLISH) (REV. 2/25/05)

ORIGINAL SCALE IN INCHES FOR REDUCED PLANS 0 1 2 3

DISREGARD PRINTS BEARING EARLIER REVISION DATES →

REVISION DATES (PRELIMINARY STAGE ONLY): 9/23/08 | 11/18/08 | 12/23/08

SHEET 12 OF 23

FILE => 55-0203-t-cbt_det.dgn

USERNAME => trmikesl DATE PLOTTED => 30-MAR-2009 TIME PLOTTED => 10:48

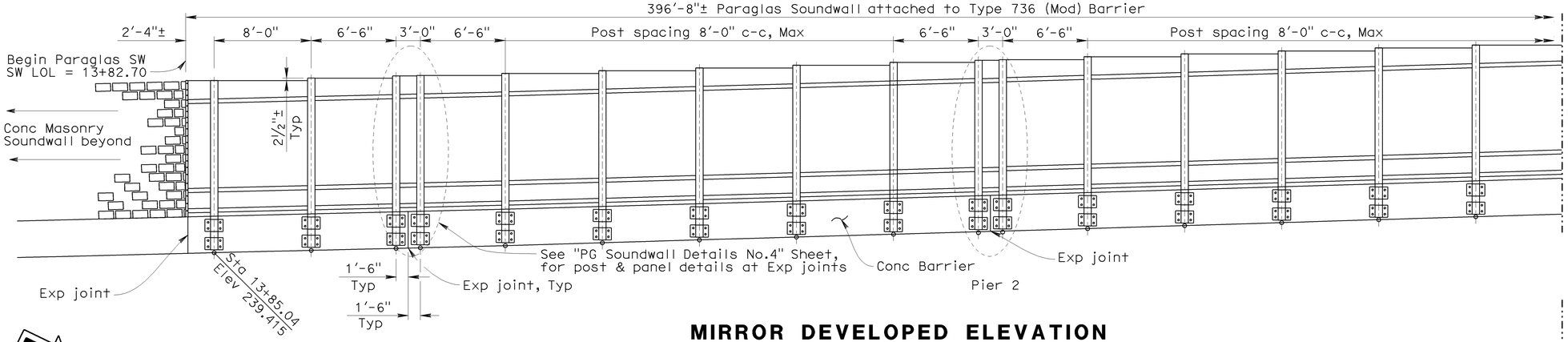

MIRROR DEVELOPED ELEVATION

No Scale

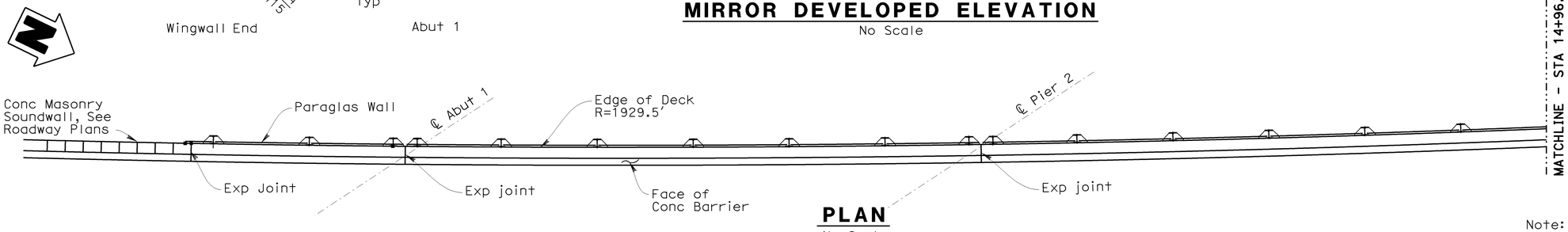

PLAN

No Scale

Note: See " PG SW - Plan & Elevation No. 1" Sheet for Genreal Notes.

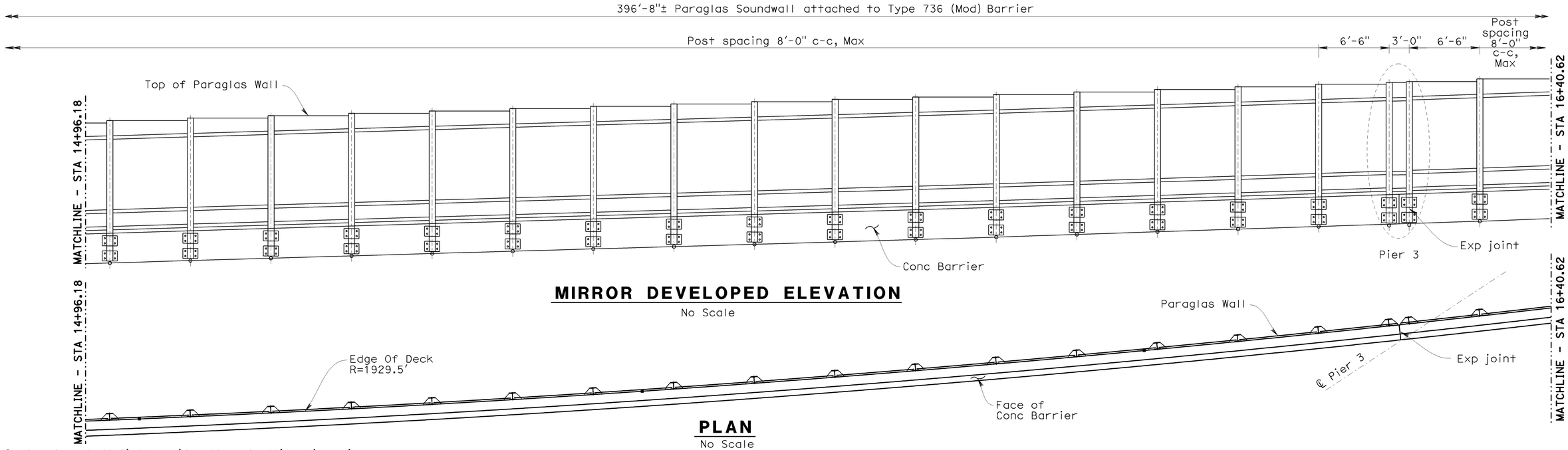

MIRROR DEVELOPED ELEVATION

No Scale

PLAN

No Scale

The Contractor shall field verify all controlling dimensions before ordering or fabrication of any material.

DIST	COUNTY	ROUTE	POST MILES TOTAL PROJECT	SHEET No	TOTAL SHEETS
12	Ora	5	1.3/1.7	117	127

REGISTERED CIVIL ENGINEER — 1/6/2009 DATE

Ashok G.Athalye No. 34301 Exp. 9-30-2009 CIVIL — REGISTERED PROFESSIONAL ENGINEER — STATE OF CALIFORNIA

3-23-09
PLANS APPROVAL DATE

The State of California or its officers or agents shall not be responsible for the accuracy or completeness of electronic copies of this plan sheet.

OCTA
550 SOUTH MAIN ST.
ORANGE, CA 92863

ATHALYE CONSULTING ENGINEERING SERVICES,INC
26457 RANCHO PKWY S
LAKE FOREST, CA 92630

DESIGN OVERSIGHT Jon Hamaguchi
1-12-09
SIGN OFF DATE

	BY	CHECKED
DESIGN	Kotha S. Rao	Raul Fernandez
DETAILS	Aniket Parkhi	Kotha S. Rao
QUANTITIES	L. Fanchun	Kotha S. Rao

PREPARED FOR THE STATE OF CALIFORNIA DEPARTMENT OF TRANSPORTATION

Ashok Athalye
PROJECT ENGINEER

BRIDGE NO.	EL CAMINO REAL UC (SOUNDWALL)
55-0203	
POST MILE 1.6	PG SW - PLAN & ELEVATION NO.1

CU 12231
EA 0G9401

DESIGN DETAIL SHEET (ENGLISH) (REV. 2/25/05)

ORIGINAL SCALE IN INCHES FOR REDUCED PLANS 0 1 2 3

DISREGARD PRINTS BEARING EARLIER REVISION DATES

REVISION DATES (PRELIMINARY STAGE ONLY): 9/28/08 11/18/08 12/23/08

SHEET 13 OF 23

FILE => 55-0203-u-psw_1o01.dgn

USERNAME => ttrimble| DATE PLOTTED => 30-MAR-2009 TIME PLOTTED => 10:49

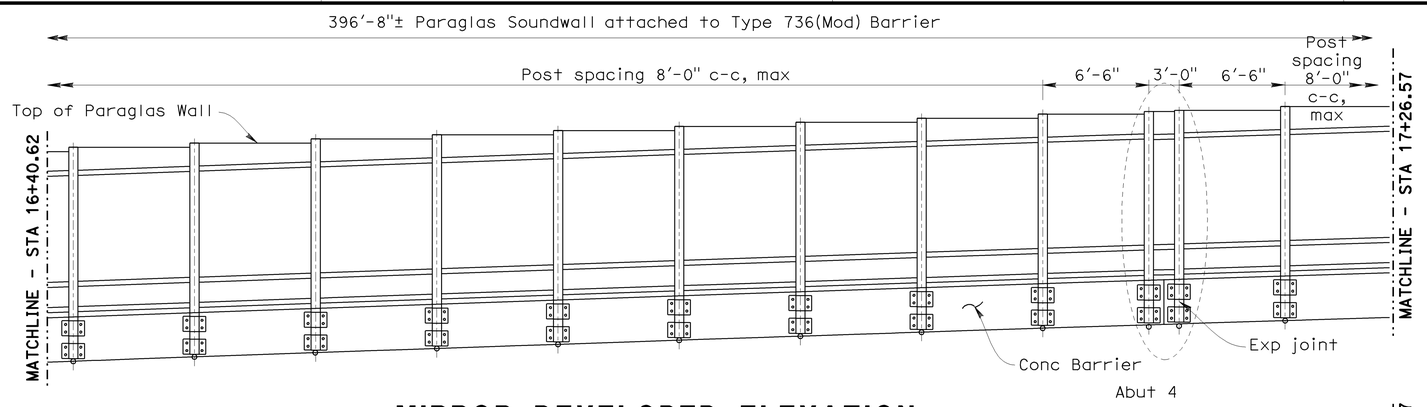

MIRROR DEVELOPED ELEVATION
No Scale

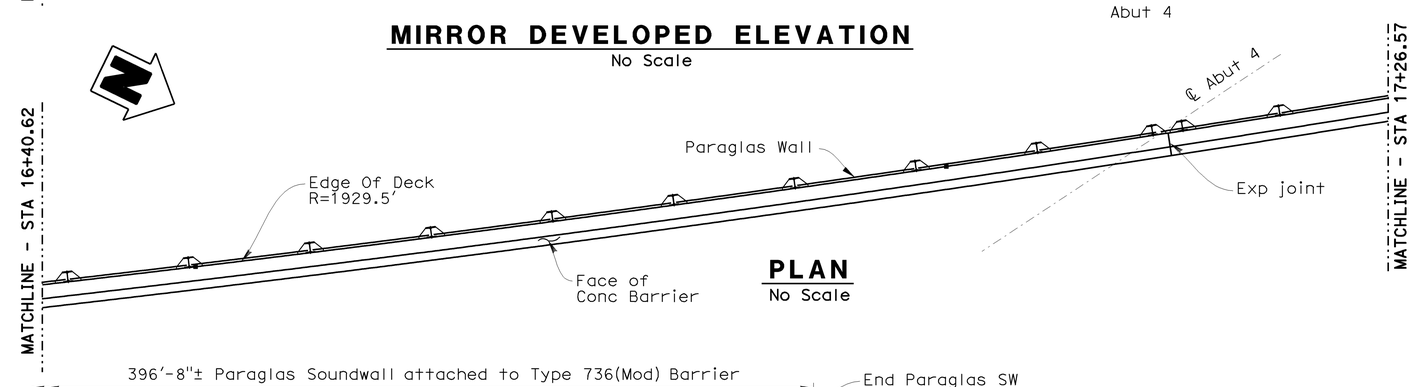

PLAN
No Scale

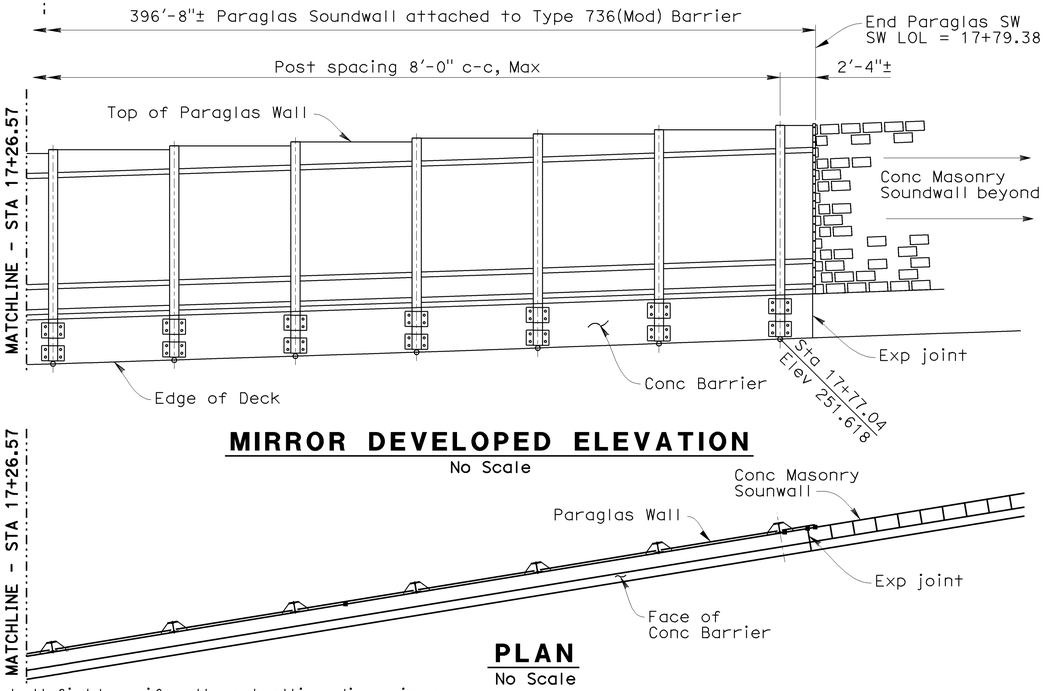

MIRROR DEVELOPED ELEVATION
No Scale

PLAN
No Scale

The Contractor shall field verify all controlling dimensions before ordering or fabrication of any material.

DIST	COUNTY	ROUTE	POST MILES TOTAL PROJECT	SHEET No	TOTAL SHEETS
12	Ora	5	1.3/1.7	118	127

REGISTERED CIVIL ENGINEER — 1/6/2009 DATE

Ashok G.Athalye No. 34301 Exp. 9-30-2009 CIVIL — REGISTERED PROFESSIONAL ENGINEER — STATE OF CALIFORNIA

3-23-09
PLANS APPROVAL DATE

The State of California or its officers or agents shall not be responsible for the accuracy or completeness of electronic copies of this plan sheet.

OCTA
550 SOUTH MAIN ST.
ORANGE, CA 92863

ATHALYE CONSULTING ENGINEERING SERVICES,INC
26457 RANCHO PKWY S
LAKE FOREST, CA 92630

GENERAL NOTES: SOUNDWALL

1. PROVIDE MATERIALS AND PERFORM WORK IN ACCORDANCE WITH DIVISION II OF THE AASHTO STANDARD SPECIFICATIONS FOR HIGHWAY BRIDGES AND THE ANSI/AASHTO/AWS D1.5-BRIDGE WELDING CODE (USE ANSI/AWS D1.1 FOR WELDING NOT COVERED IN ANSI/AASHTO/AWS D1.5), SUPPLEMENTED WITH THE PROJECT SPECIAL PROVISIONS.

2. DESIGN SPECIFICATIONS:
   - STEEL FRAME COMPONENTS:
     1989 AASHTO GUIDE SPECIFICATIONS FOR STRUCTURAL DESIGN OF SOUND BARRIERS (INCLUDING 1999 & 2002 INTERIMS) AND DESIGN DIVISION I OF THE 2002 AASHTO STANDARD SPECIFICATIONS FOR HIGHWAY BRIDGES (17TH EDITION), AS MODIFIED BY CALTRANS CRITERIA.
   - PARAGLAS SOUNDSTOP GSCC NOISE BARRIER SHEET:
     REFER TO PRODUCT SPECIFICATIONS BY CYRO INDUSTRIES, 379 INTERPACE PARKWAY, PARSIPPANY, NJ 07054.

3. DESIGN IS IN ACCORDANCE WITH WORKING STRESS DESIGN (WSD) CRITERIA.

4. DESIGN LOADS:
   GROUP 1: D+E+SC
   GROUP 2: D+W+SC+E
   GROUP 3: D+EQD/1.4+E
   WHERE D = DEAD LOAD
   E = LATERAL EARTH PRESSURE (= 0)
   SC = LIVE LOAD SURCHARGE (= 0)
   W = WIND LOAD (= 37 PSF)
   EQD = SEISMIC DEAD LOAD = 2.0 DEAD LOAD

5. DESIGN OF STEEL FRAME MEMBERS IS BASED ON THE TEST PERFORMANCE OF COMPLETE NOISE BARRIER SYSTEM SUBJECT TO VEHICULAR CRASH LOADS PER NCHRP REPORT 350 EVALUATION CRITERIA.

6. MATERIALS:
   - PROVIDE STRUCTURAL STEEL PLATES AND SHAPES CONFORMING TO M270, GRADE 50 (ASTM A709, GRADE 50), UNLESS NOTED OTHERWISE
   - PROVIDE STRUCTURAL STEEL TUBES CONFORMING TO A500, GRADE B, UNLESS NOTED OTHERWISE
   - GALVANIZE & PAINT ALL STEEL AND HARDWARE IN ACCORDANCE WITH PROJECT SPECIAL PROVISIONS.

7. CLEAN AND PAINT GALVANIZED SURFACES IN ACCORDANCE WITH MANUFACTURER'S REQUIREMENTS FOR COATING GALVANIZED METAL, WHEN ADDITIONAL COATINGS ARE REQUIRED.

8. HORIZONTAL FRAME DEFLECTION LIMITED TO THE SPAN LENGTH OF THE FRAME DIVIDED BY 240.

9. ALL CONNECTIONS ARE DESIGNED AS BEARING CONNECTIONS, UNLESS INDICATED OTHERWISE.

DESIGN OVERSIGHT Jon Hamaguchi
1-12-09
SIGN OFF DATE

	BY	CHECKED
DESIGN	Kotha S. Rao	Raul Fernandez
DETAILS	Aniket Parkhi	Kotha S. Rao
QUANTITIES	L. Fanchun	Kotha S. Rao

PREPARED FOR THE STATE OF CALIFORNIA DEPARTMENT OF TRANSPORTATION

Ashok Athalye
PROJECT ENGINEER

BRIDGE NO. 55-0203
POST MILE 1.6

EL CAMINO REAL UC (SOUNDWALL)
PG SW - PLAN & ELEVATION NO.2

DESIGN DETAIL SHEET (ENGLISH) (REV. 2/25/05)

ORIGINAL SCALE IN INCHES FOR REDUCED PLANS 0 1 2 3

CU 12231
EA 0G9401

DISREGARD PRINTS BEARING EARLIER REVISION DATES →

REVISION DATES (PRELIMINARY STAGE ONLY): 9/28/08 | 11/18/08 | 12/23/08

SHEET 14 OF 23

FILE => 55-0203-u-psw_1o02.dgn

USERNAME => ttmirkes| DATE PLOTTED => 30-MAR-2009 TIME PLOTTED => 10:49

Notes:

1. For Section B-B, see "PG Soundwall Details No. 2" sheet.
2. No mechanical rail splices in transition section.

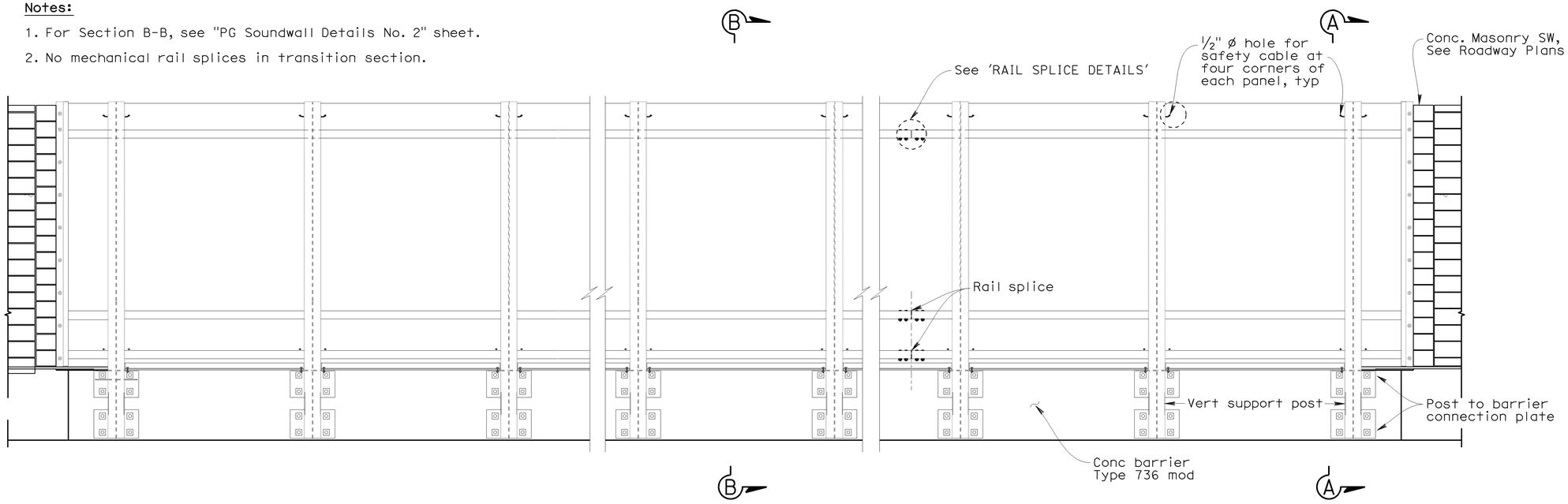

ELEVATION
No Scale

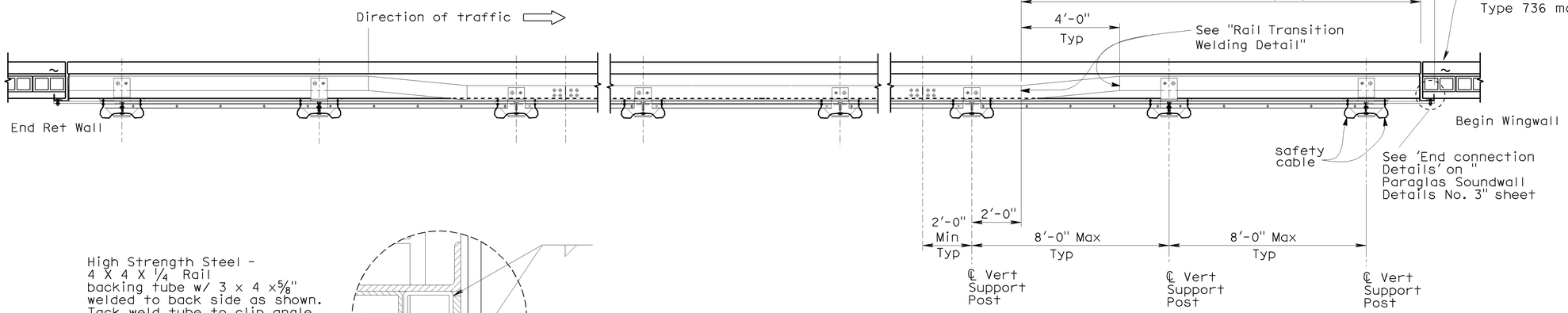

PLAN
No Scale

High Strength Steel -
4 X 4 X ¼ Rail
backing tube w/ 3 x 4 x⅝"
welded to back side as shown.
Tack weld tube to clip angle

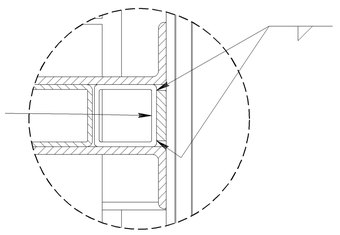

DETAIL C
No Scale

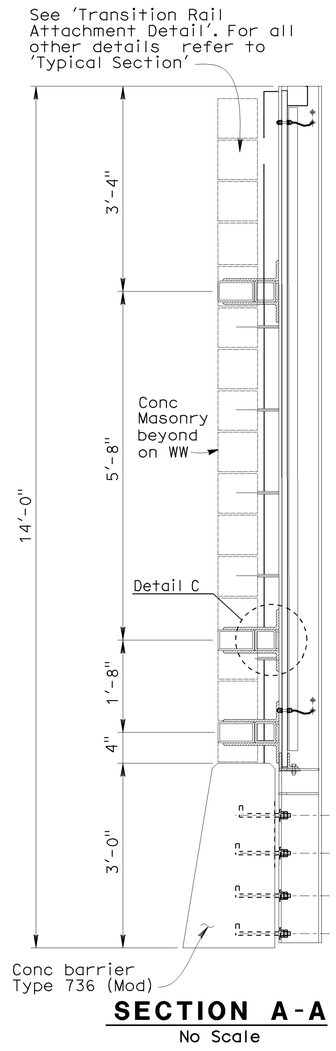

SECTION A-A
No Scale

The Contractor shall field verify all controlling dimensions before ordering or fabrication of any material.

DIST	COUNTY	ROUTE	POST MILES TOTAL PROJECT	SHEET No	TOTAL SHEETS
12	Ora	5	1.3/1.7	119	127

REGISTERED CIVIL ENGINEER — 1/6/2009 DATE

3-23-09
PLANS APPROVAL DATE

REGISTERED PROFESSIONAL ENGINEER — Ashok G.Athalye — No. 34301 — Exp. 9-30-2009 — CIVIL — STATE OF CALIFORNIA

The State of California or its officers or agents shall not be responsible for the accuracy or completeness of electronic copies of this plan sheet.

OCTA
550 SOUTH MAIN ST.
ORANGE, CA 92863

ATHALYE CONSULTING ENGINEERING SERVICES,INC
26457 RANCHO PKWY S
LAKE FOREST, CA 92630

DESIGN OVERSIGHT — Jon Hamaguchi
1-12-09
SIGN OFF DATE

	BY	CHECKED
DESIGN	Kotha S. Rao	Raul Fernandez
DETAILS	Aniket Parkhi	Kotha S. Rao
QUANTITIES	L. Fanchun	Kotha S. Rao

PREPARED FOR THE STATE OF CALIFORNIA DEPARTMENT OF TRANSPORTATION

Ashok Athalye
PROJECT ENGINEER

CU 12231
EA 0G9401

BRIDGE NO. 55-0203
POST MILE 1.6

EL CAMINO REAL UC (SOUNDWALL)
PG SOUNDWALL DETAILS NO. 1

DESIGN DETAIL SHEET (ENGLISH) (REV. 2/25/05)

ORIGINAL SCALE IN INCHES FOR REDUCED PLANS 0 1 2 3

DISREGARD PRINTS BEARING EARLIER REVISION DATES →

REVISION DATES (PRELIMINARY STAGE ONLY): 9/23/08 | 11/24/08 | 12/23/08

SHEET 15 OF 23

FILE => 55-0203-u-psw_det01.dgn

USERNAME => trmnguye DATE PLOTTED => 30-MAR-2009 TIME PLOTTED => 07:35

DIST	COUNTY	ROUTE	POST MILES TOTAL PROJECT	SHEET No	TOTAL SHEETS
12	Ora	5	1.3/1.7	120	127

Russell L Ricker III — 1/6/2009
REGISTERED CIVIL ENGINEER — DATE

3-23-09
PLANS APPROVAL DATE

REGISTERED PROFESSIONAL ENGINEER — Russell Lee Ricker III — No. 37742 — Exp. 12-31-2010 — CIVIL — STATE OF CALIFORNIA

The State of California or its officers or agents shall not be responsible for the accuracy or completeness of electronic copies of this plan sheet.

OCTA
550 SOUTH MAIN ST.
ORANGE, CA 92863

DURISOL
8270 GREENSBORO DRIVE, SUITE 810
McLEAN, VA - 22102

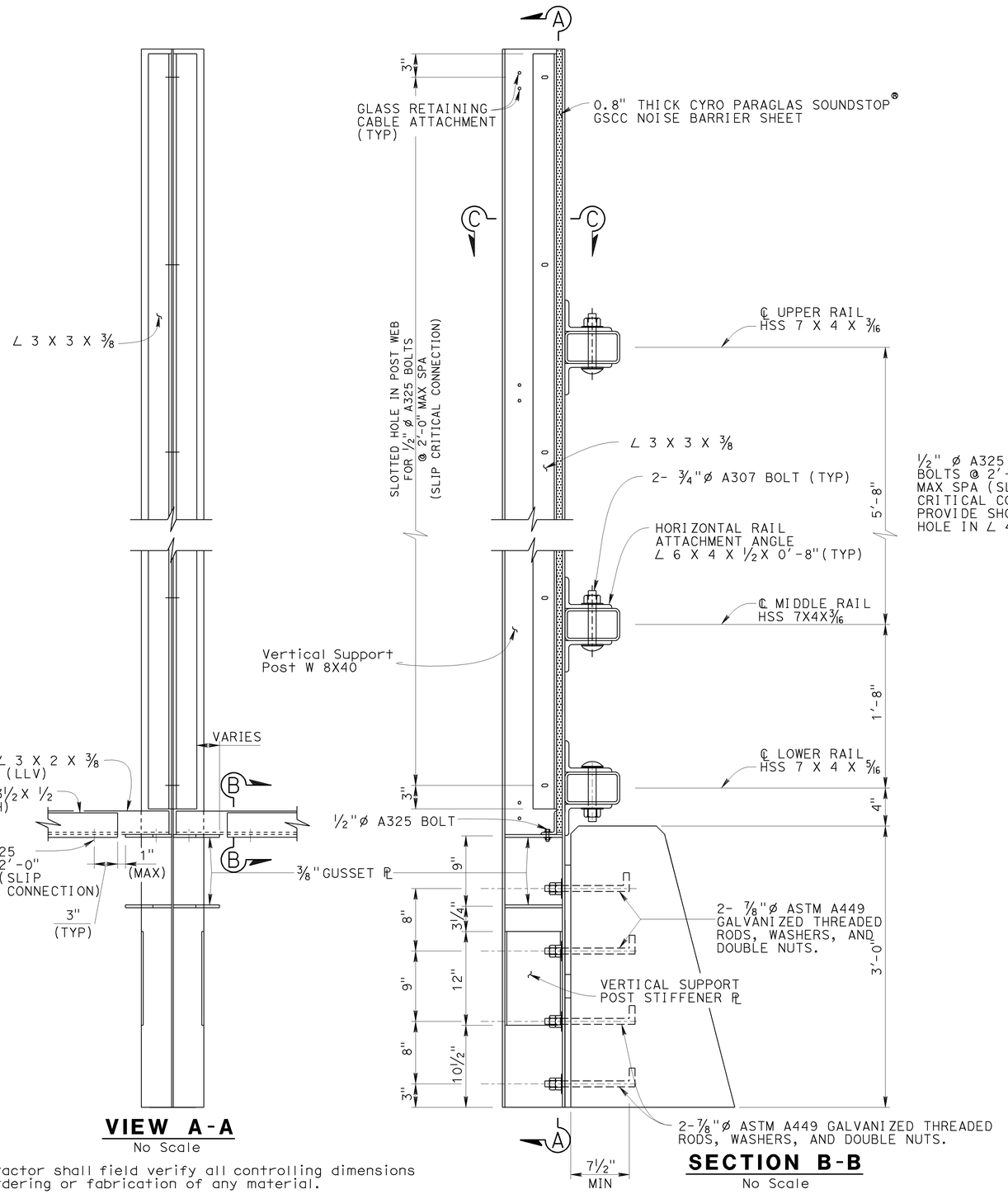

VIEW A-A
No Scale

SECTION B-B
No Scale

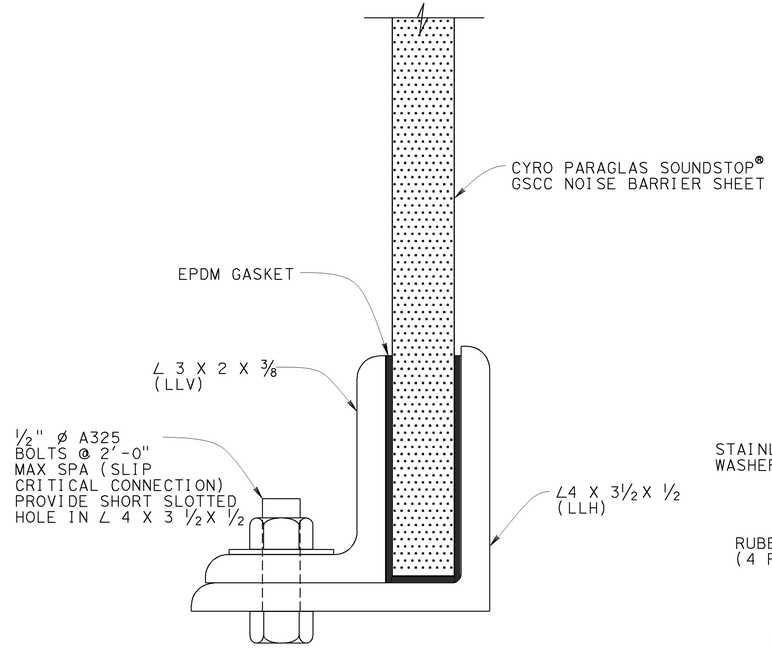

VIEW B-B
No Scale

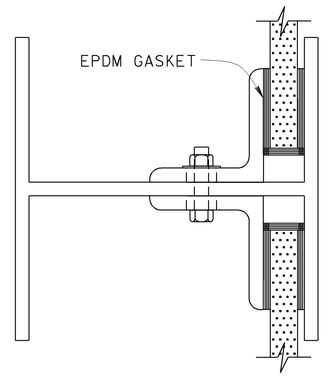

SECTION C-C
No Scale

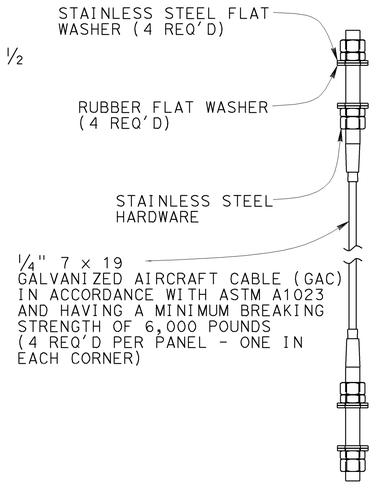

GLASS RETAINING CABLE DETAIL
No Scale

The Contractor shall field verify all controlling dimensions before ordering or fabrication of any material.

DESIGN OVERSIGHT — Jon Hamaguchi
1-12-09
SIGN OFF DATE

DESIGN	BY Russell L. Ricker III	CHECKED X	
DETAILS	BY Aniket Parkhi	CHECKED X	
QUANTITIES	BY L. Fanchun	CHECKED Kotha S. Rao	

PREPARED FOR THE STATE OF CALIFORNIA DEPARTMENT OF TRANSPORTATION

Ashok Athalye
PROJECT ENGINEER

BRIDGE NO.	55-0203
POST MILE	1.6

EL CAMINO REAL UC (SOUNDWALL)
PG SOUNDWALL DETAIL NO. 2

DESIGN DETAIL SHEET (ENGLISH) (REV. 2/25/05)

ORIGINAL SCALE IN INCHES FOR REDUCED PLANS 0 1 2 3

CU 12231
EA 0G9401

DISREGARD PRINTS BEARING EARLIER REVISION DATES →

REVISION DATES (PRELIMINARY STAGE ONLY): 9/23/08 | 11/26/08 | 12/23/08

SHEET 16 OF 23

FILE => 55-0203-u-psw_det02.dgn

USERNAME => frmoguye DATE PLOTTED => 30-MAR-2009 TIME PLOTTED => 07:35

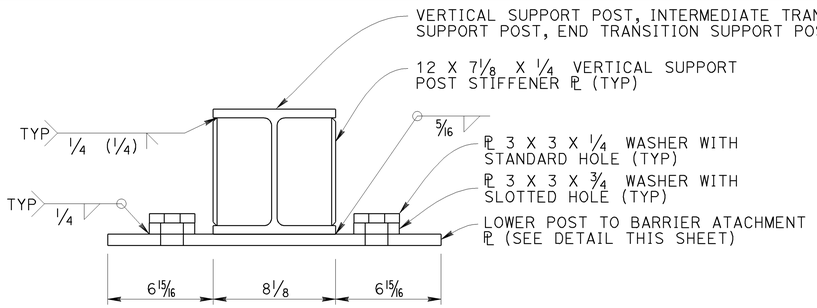

LOWER POST TO BARRIER ATTACHMENT

NOT TO SCALE

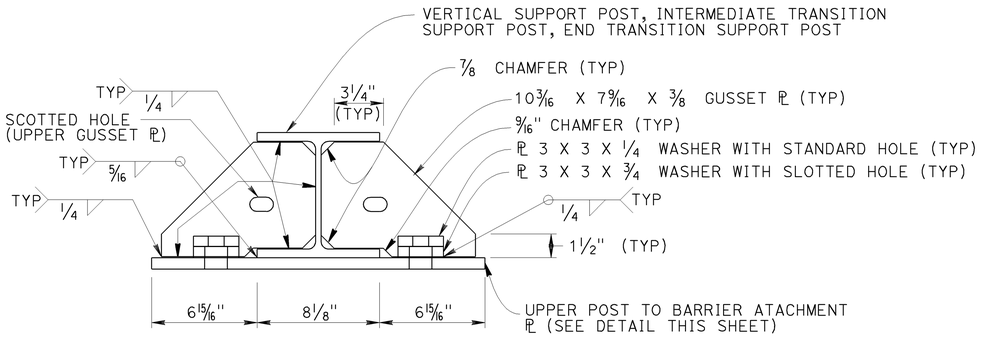

UPPER POST TO BARRIER ATTACHMENT

NOT TO SCALE

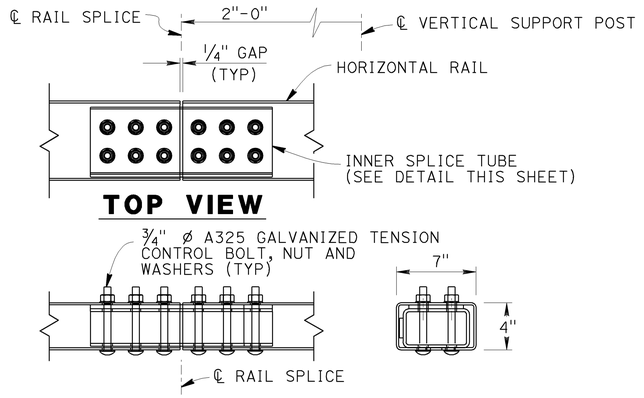

TYP HORIZONTAL RAIL SPLICE

NOT TO SCALE

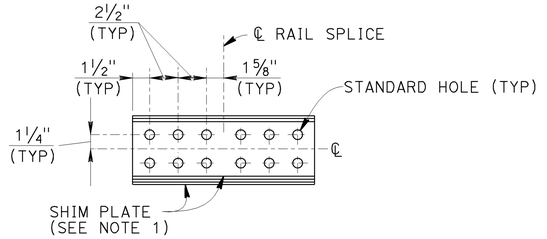

TOP VIEW

Note:

1. SHIM PLATE REQUIRED FOR UPPER AND MIDDLE RAIL. SHIM PLATE NOT REQUIRED FOR LOWER RAIL.

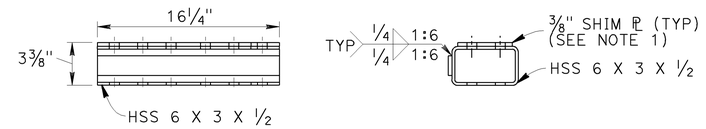

FRONT VIEW END VIEW

HORIZONTAL RAIL INNER SPLICE TUBE

NOT TO SCALE

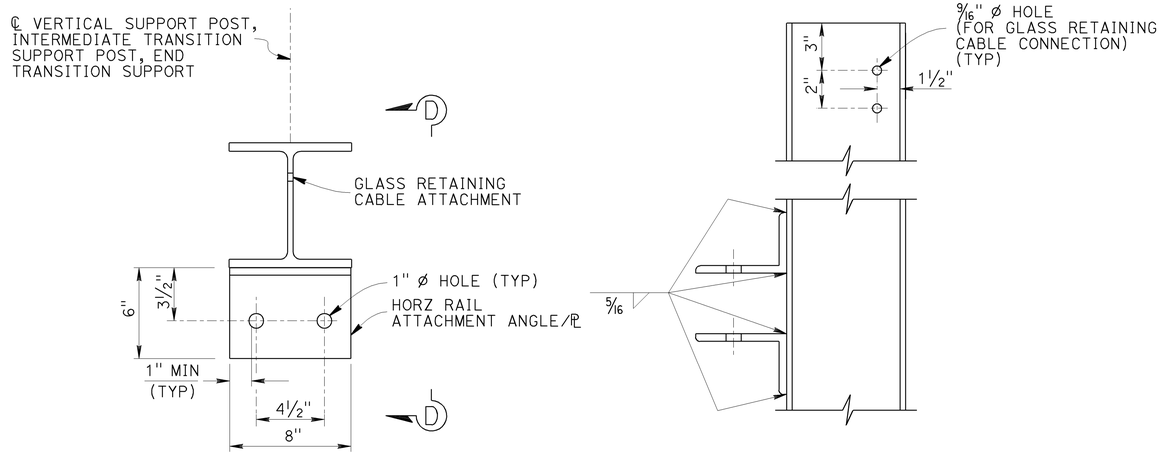

POST TO HORIZONTAL RAIL ATTACHMENT

NOT TO SCALE

SECTION D-D

NOT TO SCALE

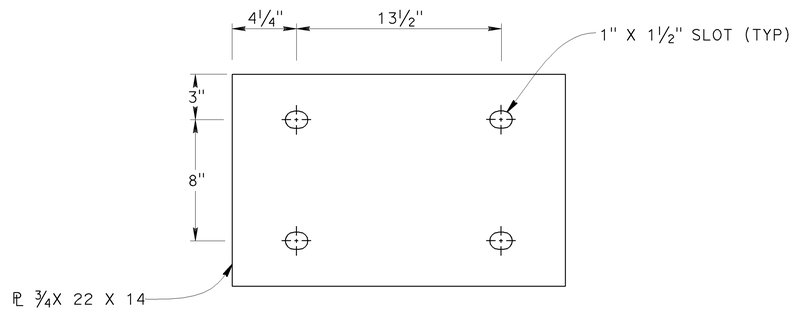

UPPER AND LOWER POST TO BARRIER ATTACHMENT PLATE DETAIL

NOT TO SCALE

The Contractor shall field verify all controlling dimensions before ordering or fabrication of any material.

DIST	COUNTY	ROUTE	POST MILES TOTAL PROJECT	SHEET No	TOTAL SHEETS
12	Ora	5	1.3/1.7	121	127

Russell J Ricker III — 1/6/2009
REGISTERED CIVIL ENGINEER — DATE

Russell Lee Ricker III, No. 37742, Exp. 12-31-2010, CIVIL, REGISTERED PROFESSIONAL ENGINEER, STATE OF CALIFORNIA

3-23-09
PLANS APPROVAL DATE

The State of California or its officers or agents shall not be responsible for the accuracy or completeness of electronic copies of this plan sheet.

OCTA
550 SOUTH MAIN ST.
ORANGE, CA 92863

DURISOL
8270 GREENSBORO DRIVE, SUITE 810
McLEAN, VA - 22102

Jon Hamaguchi
DESIGN OVERSIGHT — Jon Hamaguchi
1-12-09
SIGN OFF DATE

	BY	CHECKED
DESIGN	Russell L. Ricker III	X
DETAILS	Aniket Parkhi	X
QUANTITIES	L. Fanchun	Kotha S. Rao

PREPARED FOR THE STATE OF CALIFORNIA DEPARTMENT OF TRANSPORTATION

Ashok Athalye
PROJECT ENGINEER

BRIDGE NO. 55-0203
POST MILE 1.6

EL CAMINO REAL UC (SOUNDWALL)
PG SOUNDWALL DETAILS NO. 3

DESIGN DETAIL SHEET (ENGLISH) (REV. 2/25/05)

ORIGINAL SCALE IN INCHES FOR REDUCED PLANS 0 1 2 3

CU 12231
EA 0G9401

DISREGARD PRINTS BEARING EARLIER REVISION DATES →

REVISION DATES (PRELIMINARY STAGE ONLY): 9/23/08 | 11/18/08 | 12/23/08

SHEET 17 OF 23

FILE => 55-0203-u-psw_det03.dgn

USERNAME => trmnguye DATE PLOTTED => 30-MAR-2009 TIME PLOTTED => 07:35

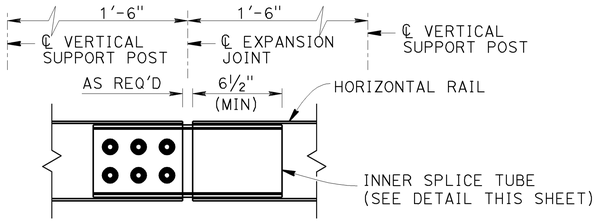

TOP VIEW

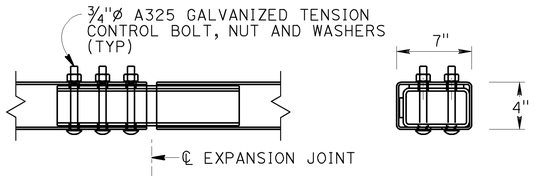

FRONT VIEW **END VIEW**

TYPICAL HORIZONTAL RAIL EXPANSION JOINT CONNECTION

No Scale

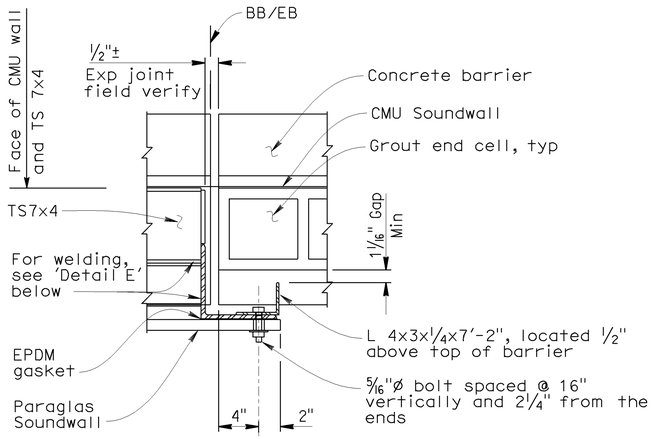

PLAN

END CONNECTION DETAIL

No Scale

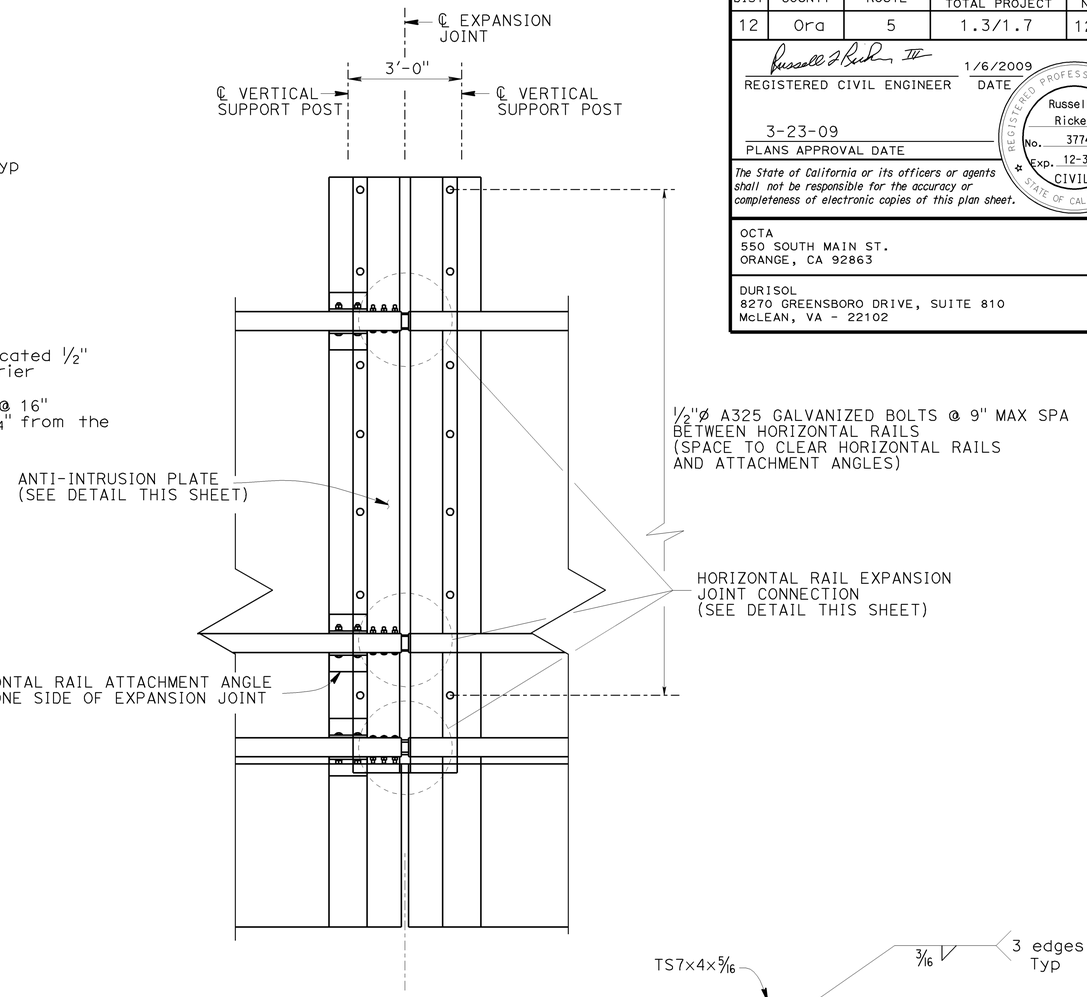

EXPANSION JOINT ELEVATION

No Scale

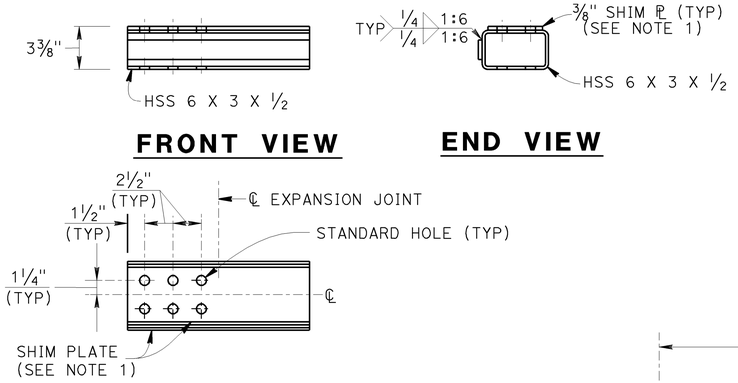

FRONT VIEW **END VIEW**

HORIZONTAL RAIL EXPANSION JOINT SPLICE TUBE

No Scale

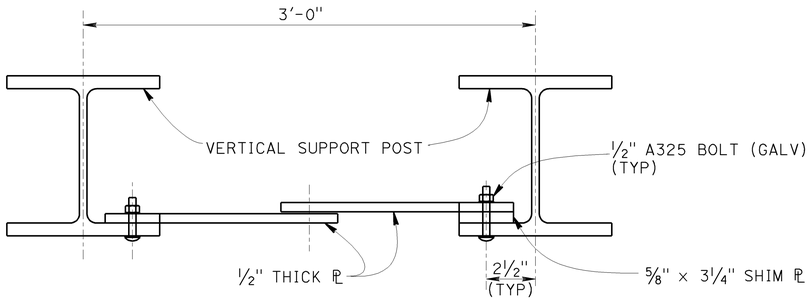

ANTI-INTRUSION PLATE

No Scale

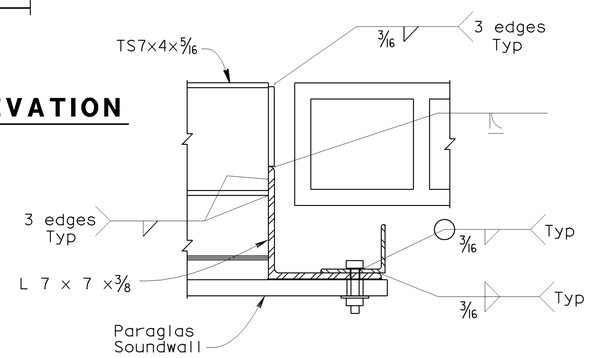

PLAN

DETAIL E

No Scale

NOTES:

1. SHIM PLATE REQUIRED FOR UPPER AND MIDDLE RAIL. SHIM PLATE NOT REQUIRED FOR LOWER RAIL.

The Contractor shall field verify all controlling dimensions before ordering or fabrication of any material.

DIST	COUNTY	ROUTE	POST MILES TOTAL PROJECT	SHEET No	TOTAL SHEETS
12	Ora	5	1.3/1.7	122	127

Russell L Ricker III
REGISTERED CIVIL ENGINEER — 1/6/2009 DATE

3-23-09
PLANS APPROVAL DATE

Russell Lee Ricker III, No. 37742, Exp. 12-31-2010, CIVIL, REGISTERED PROFESSIONAL ENGINEER, STATE OF CALIFORNIA

The State of California or its officers or agents shall not be responsible for the accuracy or completeness of electronic copies of this plan sheet.

OCTA
550 SOUTH MAIN ST.
ORANGE, CA 92863

DURISOL
8270 GREENSBORO DRIVE, SUITE 810
McLEAN, VA - 22102

Jon Hamaguchi
DESIGN OVERSIGHT Jon Hamaguchi
1-12-09
SIGN OFF DATE

	BY	CHECKED
DESIGN	Russell L. Ricker III	X
DETAILS	Aniket Parkhi	X
QUANTITIES	L. Fanchun	Kotha S. Rao

PREPARED FOR THE STATE OF CALIFORNIA DEPARTMENT OF TRANSPORTATION

Ashok Athalye
PROJECT ENGINEER

BRIDGE NO.	EL CAMINO REAL UC (SOUNDWALL)
55-0203	PG SOUNDWALL DETAILS NO. 4
POST MILE 1.6	

DESIGN DETAIL SHEET (ENGLISH) (REV. 2/25/05)

ORIGINAL SCALE IN INCHES FOR REDUCED PLANS 0 1 2 3

CU 12231
EA 0G9401

DISREGARD PRINTS BEARING EARLIER REVISION DATES →

REVISION DATES (PRELIMINARY STAGE ONLY): 9/23/08 11/18/08 12/23/08

SHEET 18 OF 23

FILE => 55-0203-u-psw_det04.dgn

USERNAME => frmihesi DATE PLOTTED => 30-MAR-2009 TIME PLOTTED => 11:20

REFERENCE: CALTRANS SOIL & ROCK LOGGING, CLASSIFICATION, AND PRESENTATION MANUAL (JUNE 2007)

DIST	COUNTY	ROUTE	POST MILES TOTAL PROJECT	SHEET No	TOTAL SHEETS
12	Ora	5	1.3/1.7	123	127

1/6/2009
REGISTERED PROFESSIONAL ENGINEER

3-23-09
PLANS APPROVAL DATE

REGISTERED PROFESSIONAL ENGINEER · DEAN CHANDRA · No. 2376 · Exp. 6/30/09 · GEOTECHNICAL · STATE OF CALIFORNIA

The State of California or its officers or agents shall not be responsible for the accuracy or completeness of electronic copies of this plan sheet.

ORANGE COUNTY TRANSPORTATION AUTHORITY
550 SOUTH MAIN STREET
ORANGE, CA 92863

LEIGHTON CONSULTING INC.
17781 COWAN
IRVINE, CA 92614

CEMENTATION

Description	Criteria
Weak	Crumbles or breaks with handling or little finger pressure.
Moderate	Crumbles or breaks with considerable finger pressure.
Strong	Will not crumble or break with finger pressure.

BOREHOLE IDENTIFICATION

Symbol	Hole Type	Description
Size	A	Auger Boring
Size	R P	Rotary drilled boring Rotary percussion boring (air)
Size	R	Rotary drilled diamond core
Size	HD HA	Hand driven (1-inch soil tube) Hand Auger
●	D	Dynamic Cone Penetration Boring
▲	CPT	Cone Penetration Test (ASTM D 5778-95)
⬚	O	Other

Note: Size in inches.

CONSISTENCY OF COHESIVE SOILS

Description	Unconfined Compressive Strength (tsf)	Pocket Penetrometer Measurement (tsf)	Torvane Measurement (tsf)	Field Approximation
Very Soft	< 0.25	< 0.25	< 0.12	Easily penetrated several inches by fist
Soft	0.25 to 0.50	0.25 to 0.50	0.12 to 0.25	Easily penetrated several inches by thumb
Medium Stiff	0.50 to 1.0	0.50 to 1.0	0.25 to 0.50	Penetrated several inches by thumb with moderate effort
Stiff	1 to 2	1 to 2	0.50 to 1.0	Readily indented by thumb but penetrated only with great effort
Very Stiff	2 to 4	2 to 4	1.0 to 2.0	Readily indented by thumbnail
Hard	> 4.0	> 4.0	> 2.0	Indented by thumbnail with difficulty

PLASTICITY OF FINE-GRAINED SOILS

Description	Criteria
Nonplastic	A 1/8-inch thread cannot be rolled at any water content.
Low	The thread can barely be rolled and the lump cannot be formed when drier than the plastic limit.
Medium	The thread is easy to roll and not much time is required to reach the plastic limit. The thread cannot be rerolled after reaching the plastic limit. The lump crumbles when drier than the plastic limit.
High	It takes considerable time rolling and kneading to reach the plastic limit. The thread can be rerolled several times after reaching the plastic limit. The lump can be formed without crumbling when drier than the plastic limit.

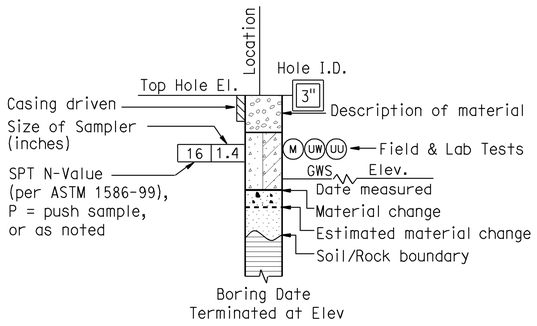

DRY BORING

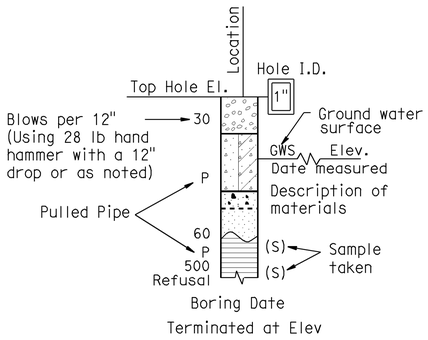

HAND BORING

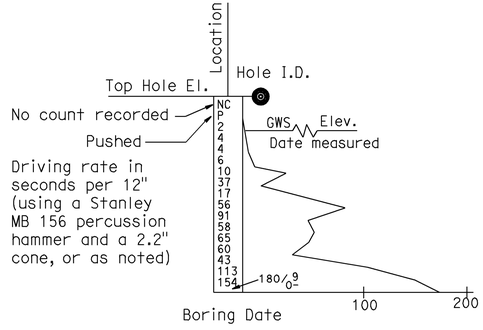

DYNAMIC CONE PENETRATION BORING

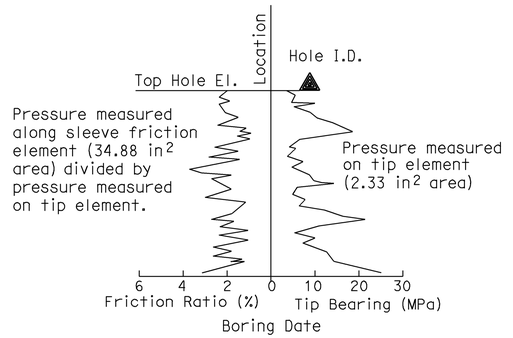

CONE PENETRATION TEST (CPT) SOUNDING

ENGINEERING SERVICES	GEOTECHNICAL SERVICES	STATE OF CALIFORNIA DEPARTMENT OF TRANSPORTATION	DIVISION OF ENGINEERING SERVICES STRUCTURE DESIGN	BRIDGE NO. 55-0203	SOIL LEGEND
DESIGN OVERSIGHT Jon Hamaguchi 1-12-09 SIGN OFF DATE	PREPARED BY BUU TRAN		DESIGN BRANCH	POST MILE 1.3/1.7	LOG OF TEST BORINGS SHEET 1 OF 3
	CHECKED BY T. KIM				

GS LOTB SOIL LEGEND

ORIGINAL SCALE IN INCHES FOR REDUCED PLANS 0 1 2 3

CU 12231
EA 0G9401

DISREGARD PRINTS BEARING EARLIER REVISION DATES →

REVISION DATES: 01/05/09

SHEET 19 OF 23

FILE => 55-0203-1obt1.dgn

USERNAME => ttramguye DATE PLOTTED => 30-MAR-2009 TIME PLOTTED => 07:35

REFERENCE: CALTRANS SOIL & ROCK LOGGING, CLASSIFICATION, AND PRESENTATION MANUAL (JUNE 2007)

GROUP SYMBOLS AND NAMES

Graphic/Symbol	Group Names	Graphic/Symbol	Group Names
GW	Well-graded GRAVEL Well-graded GRAVEL with SAND	CL	Lean CLAY Lean CLAY with SAND Lean CLAY with GRAVEL SANDY lean CLAY SANDY lean CLAY with GRAVEL GRAVELLY lean CLAY GRAVELLY lean CLAY with SAND
GP	Poorly graded GRAVEL Poorly graded GRAVEL with SAND		
GW-GM	Well-graded GRAVEL with SILT Well-graded GRAVEL with SILT and SAND	CL-ML	SILTY CLAY SILTY CLAY with SAND SILTY CLAY with GRAVEL SANDY SILTY CLAY SANDY SILTY CLAY with GRAVEL GRAVELLY SILTY CLAY GRAVELLY SILTY CLAY with SAND
GW-GC	Well-graded GRAVEL with CLAY (or SILTY CLAY) Well-graded GRAVEL with CLAY and SAND (or SILTY CLAY and SAND)		
GP-GM	Poorly graded GRAVEL with SILT Poorly graded GRAVEL with SILT and SAND	ML	SILT SILT with SAND SILT with GRAVEL SANDY SILT SANDY SILT with GRAVEL GRAVELLY SILT GRAVELLY SILT with SAND
GP-GC	Poorly graded GRAVEL with CLAY (or SILTY CLAY) Poorly graded GRAVEL with CLAY and SAND (or SILTY CLAY and SAND)		
GM	SILTY GRAVEL SILTY GRAVEL with SAND	OL	ORGANIC lean CLAY ORGANIC lean CLAY with SAND ORGANIC lean CLAY with GRAVEL SANDY ORGANIC lean CLAY SANDY ORGANIC lean CLAY with GRAVEL GRAVELLY ORGANIC lean CLAY GRAVELLY ORGANIC lean CLAY with SAND
GC	CLAYEY GRAVEL CLAYEY GRAVEL with SAND		
GC-GM	SILTY, CLAYEY GRAVEL SILTY, CLAYEY GRAVEL with SAND	OL	ORGANIC SILT ORGANIC SILT with SAND ORGANIC SILT with GRAVEL SANDY ORGANIC SILT SANDY ORGANIC SILT with GRAVEL GRAVELLY ORGANIC SILT GRAVELLY ORGANIC SILT with SAND
SW	Well-graded SAND Well-graded SAND with GRAVEL		
SP	Poorly graded SAND Poorly graded SAND with GRAVEL	CH	Fat CLAY Fat CLAY with SAND Fat CLAY with GRAVEL SANDY fat CLAY SANDY fat CLAY with GRAVEL GRAVELLY fat CLAY GRAVELLY fat CLAY with SAND
SW-SM	Well-graded SAND with SILT Well-graded SAND with SILT and GRAVEL		
SW-SC	Well-graded SAND with CLAY (or SILTY CLAY) Well-graded SAND with CLAY and GRAVEL (or SILTY CLAY and GRAVEL)	MH	Elastic SILT Elastic SILT with SAND Elastic SILT with GRAVEL SANDY elastic SILT SANDY elastic SILT with GRAVEL GRAVELLY elastic SILT GRAVELLY elastic SILT with SAND
SP-SM	Poorly graded SAND with SILT Poorly graded SAND with SILT and GRAVEL		
SP-SC	Poorly graded SAND with CLAY (or SILTY CLAY) Poorly graded SAND with CLAY and GRAVEL (or SILTY CLAY and GRAVEL)	OH	ORGANIC fat CLAY ORGANIC fat CLAY with SAND ORGANIC fat CLAY with GRAVEL SANDY ORGANIC fat CLAY SANDY ORGANIC fat CLAY with GRAVEL GRAVELLY ORGANIC fat CLAY GRAVELLY ORGANIC fat CLAY with SAND
SM	SILTY SAND SILTY SAND with GRAVEL		
SC	CLAYEY SAND CLAYEY SAND with GRAVEL	OH	ORGANIC elastic SILT ORGANIC elastic SILT with SAND ORGANIC elastic SILT with GRAVEL SANDY ORGANIC elastic SILT SANDY ORGANIC elastic SILT with GRAVEL GRAVELLY ORGANIC elastic SILT GRAVELLY ORGANIC elastic SILT with SAND
SC-SM	SILTY, CLAYEY SAND SILTY, CLAYEY SAND with GRAVEL		
PT	PEAT	OL/OH	ORGANIC SOIL ORGANIC SOIL with SAND ORGANIC SOIL with GRAVEL SANDY ORGANIC SOIL SANDY ORGANIC SOIL with GRAVEL GRAVELLY ORGANIC SOIL GRAVELLY ORGANIC SOIL with SAND
	COBBLES COBBLES and BOULDERS BOULDERS		

FIELD AND LABORATORY TESTING

- (C) Consolidation (ASTM D 2435)
- (CL) Collapse Potential (ASTM D 5333)
- (CP) Compaction Curve (CTM 216)
- (CR) Corrosivity Testing (CTM 643, CTM 422, CTM 417)
- (CU) Consolidated Undrained Triaxial (ASTM D 4767)
- (DS) Direct Shear (ASTM D 3080)
- (EI) Expansion Index (ASTM D 4829)
- (M) Moisture Content (ASTM D 2216)
- (OC) Organic Content-% (ASTM D 2974)
- (P) Permeability (CTM 220)
- (PA) Particle Size Analysis (ASTM D 422)
- (PI) Plasticity Index (AASHTO T 90) Liquid Limit (AASHTO T 89)
- (PL) Point Load Index (ASTM D 5731)
- (PM) Pressure Meter
- (PP) Pocket Penetrometer
- (R) R-Value (CTM 301)
- (SE) Sand Equivalent (CTM 217)
- (SG) Specific Gravity (AASHTO T 100)
- (SL) Shrinkage Limit (ASTM D 427)
- (SW) Swell Potential (ASTM D 4546)
- (TV) Pocket Torvane
- (UC) Unconfined Compression-Soil (ASTM D 2166) Unconfined Compression-Rock (ASTM D 2938)
- (UU) Unconsolidated Undrained Triaxial (ASTM D 2850)
- (UW) Unit Weight (ASTM D 4767)
- (VS) Vane Shear (AASHTO T 223)

DIST	COUNTY	ROUTE	POST MILES TOTAL PROJECT	SHEET No	TOTAL SHEETS
12	Ora	5	1.3/1.7	124	127

1/6/2009
REGISTERED PROFESSIONAL ENGINEER

3-23-09
PLANS APPROVAL DATE

REGISTERED PROFESSIONAL ENGINEER — BUU CHANDRA — No. 2376 — Exp. 6/30/09 — GEOTECHNICAL — STATE OF CALIFORNIA

The State of California or its officers or agents shall not be responsible for the accuracy or completeness of electronic copies of this plan sheet.

ORANGE COUNTY TRANSPORTATION AUTHORITY
550 SOUTH MAIN STREET
ORANGE, CA 92863

LEIGHTON CONSULTING INC.
17781 COWAN
IRVINE, CA 92614

APPARENT DENSITY OF COHESIONLESS SOILS

Description	SPT N_{60} (Blows / 12 inches)
Very loose	0 - 4
Loose	5 - 10
Medium Dense	11 - 30
Dense	31 - 50
Very Dense	> 50

MOISTURE

Description	Criteria
Dry	Absence of moisture, dusty, dry to the touch
Moist	Damp but no visible water
Wet	Visible free water, usually soil is below water table

PERCENT OR PROPORTION OF SOILS

Description	Criteria
Trace	Particles are present but estimated to be less than 5%
Few	5 to 10%
Little	15 to 25%
Some	30 to 45%
Mostly	50 to 100%

PARTICLE SIZE

Description		Size
Boulder		> 12"
Cobble		3" to 12"
Gravel	Coarse	3/4" to 3"
	Fine	No. 4 to 3/4"
Sand	Coarse	No. 10 to No. 4
	Medium	No. 40 to No. 10
	Fine	No. 200 to No. 40

ENGINEERING SERVICES
Jon Hamaguchi
DESIGN OVERSIGHT
1-12-09
SIGN OFF DATE

GEOTECHNICAL SERVICES
PREPARED BY: BUU TRAN
CHECKED BY: T. KIM

STATE OF CALIFORNIA
DEPARTMENT OF TRANSPORTATION

DIVISION OF ENGINEERING SERVICES
STRUCTURE DESIGN
DESIGN BRANCH

BRIDGE NO. 55-0203
POST MILE 1.3/1.7

CU 12231
EA 009401

SOIL LEGEND
LOG OF TEST BORINGS SHEET 2 OF 3

GS LOTB SOIL LEGEND

ORIGINAL SCALE IN INCHES FOR REDUCED PLANS: 0 1 2 3

DISREGARD PRINTS BEARING EARLIER REVISION DATES →

REVISION DATES: 01/05/09

SHEET 20 OF 23

FILE => 55-0203-lobt2.dgn

USERNAME => trmoyle DATE PLOTTED => 30-MAR-2009 TIME PLOTTED => 07:35

DIST	COUNTY	ROUTE	POST MILES TOTAL PROJECT	SHEET No	TOTAL SHEETS
12	Ora	5	1.3/1.7	125	127

1/6/2009
REGISTERED PROFESSIONAL ENGINEER

3-23-09
PLANS APPROVAL DATE

REGISTERED PROFESSIONAL ENGINEER — ROJAN CHANDRA — No. 2376 — Exp. 6/30/09 — GEOTECHNICAL — STATE OF CALIFORNIA

The State of California or its officers or agents shall not be responsible for the accuracy or completeness of electronic copies of this plan sheet.

ORANGE COUNTY
TRANSPORTATION AUTHORITY
550 SOUTH MAIN STREET
ORANGE, CA 92863

LEIGHTON CONSULTING INC.
17781 COWAN
IRVINE, CA 92614

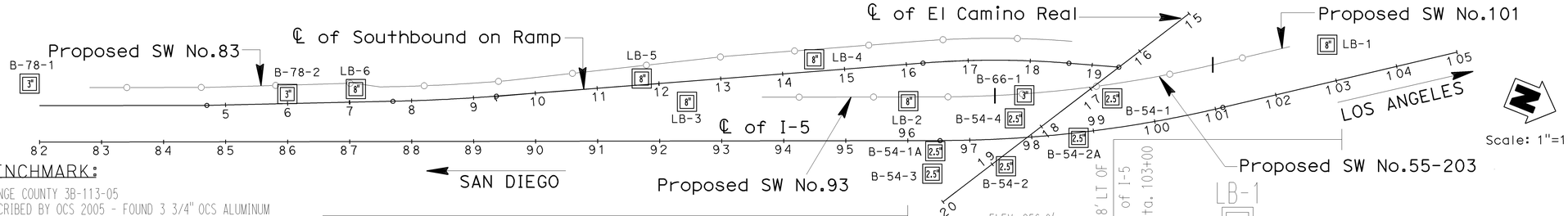

BENCHMARK:

ORANGE COUNTY 3B-113-05
DESCRIBED BY OCS 2005 - FOUND 3 3/4" OCS ALUMINUM BENCHMARK DISK STAMPED "3B-113-05" SET IN THE TOP SOUTHWESTERLY CORNER OF A 6.4 FT. BY 9.5 FT. CONCRETE CATCH BASIN. MONUMENT IS LOCATED IN THE SOUTHEASTERLY CORNER OF THE INTERSECTION OFAVENIDA DEL PRESIDENTE AND AVENIDA MENDOCINO, 36 FT. EASTERLY OF THE CENTERLINE OF DEL PRESIDENTE, AND 63 FT. SOUTHERLY OF THE CENTERLINE OF MENDOCINO. MONUMENT IS SET LEVEL WITH THE SIDEWALK

180.998 FEET, 1995 ADJUSTMENT (2005 YEAR LEVELED)

LEGEND

LB-3 (8") — BORING BY LEIGHTON CONSULTING INC., 2008
B-54-4 (2.5") — BORING BY OTHERS (CALTRANS, 1957)
B-66-1 (3") — BORING BY OTHERS (CALTRANS, 1979)

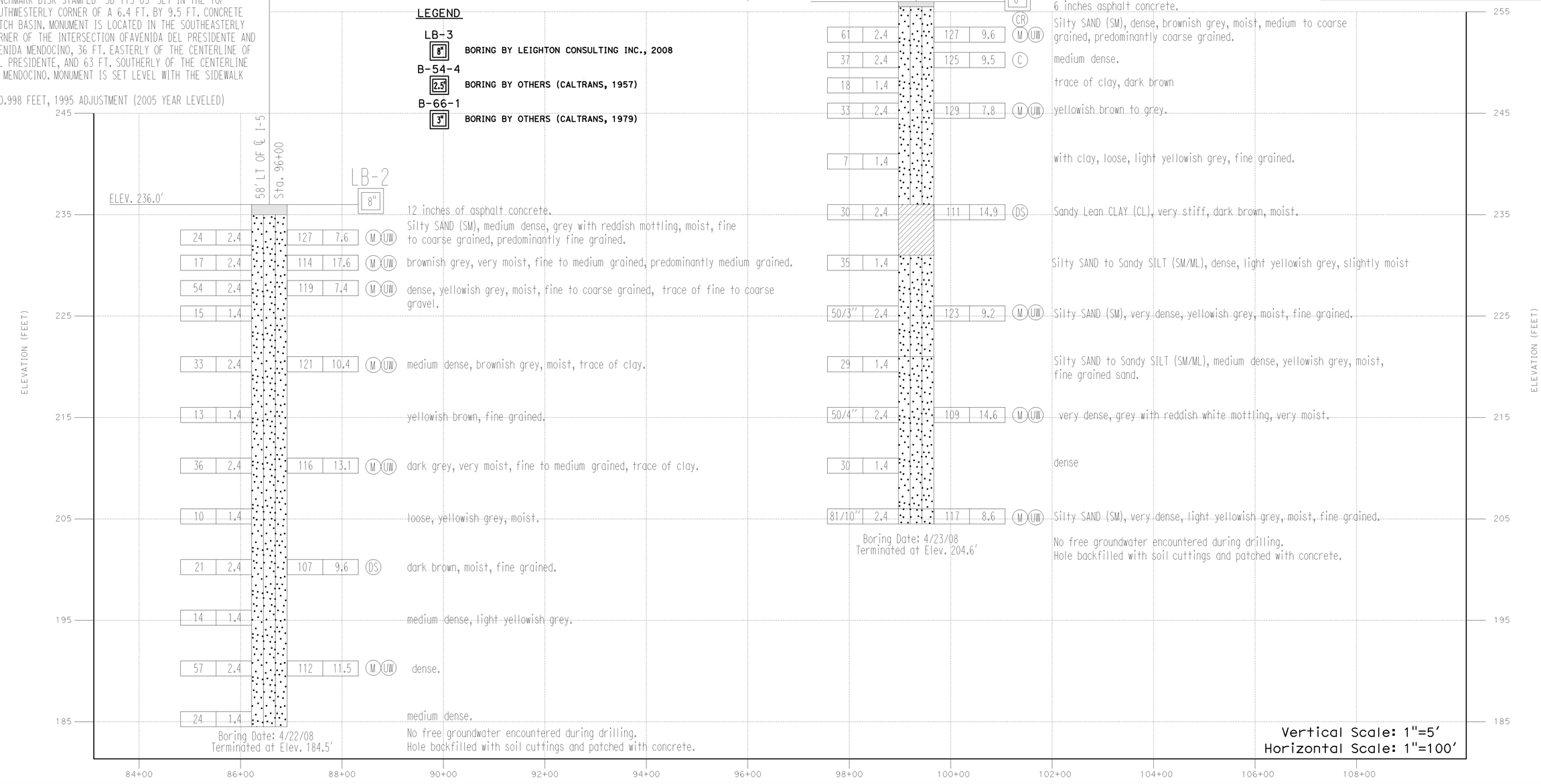

LB-2 (8") — ELEV. 236.0'

					12 inches of asphalt concrete.
24	2.4	127	7.6	M UW	Silty SAND (SM), medium dense, grey with reddish mottling, moist, fine to coarse grained, predominantly fine grained.
17	2.4	114	17.6	M UW	brownish grey, very moist, fine to medium grained, predominantly medium grained.
54	2.4	119	7.4	M UW	dense, yellowish grey, moist, fine to coarse grained, trace of fine to coarse gravel.
15	1.4				
33	2.4	121	10.4	M UW	medium dense, brownish grey, moist, trace of clay.
13	1.4				yellowish brown, fine grained.
36	2.4	116	13.1	M UW	dark grey, very moist, fine to medium grained, trace of clay.
10	1.4				loose, yellowish grey, moist.
21	2.4	107	9.6	DS	dark brown, moist, fine grained.
14	1.4				medium dense, light yellowish grey.
57	2.4	112	11.5	M UW	dense.
24	1.4				medium dense.

Boring Date: 4/22/08
Terminated at Elev. 184.5'

No free groundwater encountered during drilling.
Hole backfilled with soil cuttings and patched with concrete.

LB-1 (8") — ELEV. 256.0'

				CR	6 inches asphalt concrete.
61	2.4	127	9.6	M UW	Silty SAND (SM), dense, brownish grey, moist, medium to coarse grained, predominantly coarse grained.
37	2.4	125	9.5	C	medium dense.
18	1.4				trace of clay, dark brown
33	2.4	129	7.8	M UW	yellowish brown to grey.
7	1.4				with clay, loose, light yellowish grey, fine grained.
30	2.4	111	14.9	DS	Sandy Lean CLAY (CL), very stiff, dark brown, moist.
35	1.4				Silty SAND to Sandy SILT (SM/ML), dense, light yellowish grey, slightly moist
50/3"	2.4	123	9.2	M UW	Silty SAND (SM), very dense, yellowish grey, moist, fine grained.
29	1.4				Silty SAND to Sandy SILT (SM/ML), medium dense, yellowish grey, moist, fine grained sand.
50/4"	2.4	109	14.6	M UW	very dense, grey with reddish white mottling, very moist.
30	1.4				dense
81/10"	2.4	117	8.6	M UW	Silty SAND (SM), very dense, light yellowish grey, moist, fine grained.

Boring Date: 4/23/08
Terminated at Elev. 204.6'

No free groundwater encountered during drilling.
Hole backfilled with soil cuttings and patched with concrete.

Vertical Scale: 1"=5'
Horizontal Scale: 1"=100'

ENGINEERING SERVICES	GEOTECHNICAL SERVICES	STATE OF CALIFORNIA DEPARTMENT OF TRANSPORTATION	DIVISION OF ENGINEERING SERVICES STRUCTURE DESIGN	BRIDGE NO. 55-0203	I-5/EL-CAMINO REAL SOUNDWALL
DESIGN OVERSIGHT Jon Hamaguchi 1-12-09 SIGN OFF DATE	DRAWN BY: BUU TRAN CHECKED BY: T. KIM	FIELD INVESTIGATION BY: S. PULIJALA	DESIGN BRANCH	POST MILES 1.3/1.7	LOG OF TEST BORINGS SHEET 3 OF 3

OGS CIVIL LOG OF TEST BORINGS SHEET

ORIGINAL SCALE IN INCHES FOR REDUCED PLANS 0 1 2 3

CU 12231
EA 0G9401

DISREGARD PRINTS BEARING EARLIER REVISION DATES →

REVISION DATES: 01/05/09

SHEET 21 OF 23

FILE => 55-0203-1obt3.dgn

USERNAME => trmnguye DATE PLOTTED => 30-MAR-2009 TIME PLOTTED => 07:35

FED. ROAD DIV. NO.	STATE	F. A. PROJECT No.	SHEET NO.	TOTAL SHEETS
7	CALIF.			

DIST.	COUNTY	ROUTE	SECTION	SHEET NO.	TOTAL SHEETS
07	Ora	5	00/61	475	538
	SD	5	97.1/R1.7		

Acting Chief, Office of Bridge Design — #165

DATE APPROVED: March 12, 1979

BENCH MARK

B.M. 96-S.Cle.-58 Elev. 235.78
Top of brass cap in type A survey Mon. on ℄ existing Rte. 5 Sta. 95+99.45.

B-1

N 458,136.149
E 586,855.544

97 98 99

℄ CONST. RTE. 5

℄ EL CAMINO REAL

88 89 90

B-3 B-2 B-4 B-1

B-3: 46' Rt. Sta. 96+33 ℄ Const. Rte. 5
B-2: 35' Rt. Sta. 97+74 ℄ Const. Rte. 5
B-4: 50' Rt. Sta. 97+85 ℄ Const. Rte. 5
B-1: 69' Lt. Sta. 98+19 ℄ Const. Rte. 5

Approx. existing ground line ℄ Rte 5

Slightly compact to compact light grey interbedded very fine silty sand and sandy silt.

Dense light grey very fine sand with little silt binders

Very dense light grey fine sand and gravelly sand.

220 210 200 190 180 170 160

10-6-66 10-5-66

PROFILE

Scale: Vert 1"=10'
Horiz. 1"=20'

PLAN

Scale: 1"=20'

I/O GROUND A... RECOMMENDED
FOR ... USE
BRIDGE DEPT. GEOLOGY SECTION
DATE 10-1966

AS BUILT PLANS
Contract No. 07-105274
Date Completed
Document No.

NO AS BUILT CORRECTION

AS BUILT
CORRECTIONS BY W. Lobse
CONTRACT NO. 07-105274
DATE 4-1-83 and 10-14-83

SHEET	OF
20	20

LEGEND OF EXPLORATIONS

- Penetrometer
- 2½" Core Penetrometer
- Sampler Borings (Drv)
- Rotary Borings (Wet)
- Auger Boring (Dry)
- Jet Boring
- Core Boring
- Test Pit
- 1" Soil Tube
- Rotary Boring
- Penetration Boring

LEGEND OF EARTH MATERIALS

- Gravel
- Sand
- Silt
- Clay
- Silty Clay or Clayey Silt
- Silty Clay or Clayey Silt with Organic Matter
- Fill Material
- Igneous Rock
- Sedimentary Rock
- Metamorphic Rock
- Sandy Clay or Clayey Sand
- Sandy Silt or Silty Sand

CLASSIFICATION OF EARTH MATERIALS ... Unified Soil Classification System ... Diagram showing the basis for estimates of percentages of gravel, sand and fines ... Silty Clay or Clayey Silt ... Sandy Silt or Silty Sand ... Silt or Clay

NOTE: Classification of earth material as shown on this sheet is based upon field inspection and is not to be construed to imply mechanical analysis.

	by	Date
FIELD STUDY	D. Mikes	10-6-66
DRAWN	S. Allen	10-13-66
CHECKED	R. Kennedy	

Approved: Kenneth C. Mead, Supervising Geologist

BRIDGE DEPARTMENT
ENGINEERING GEOLOGY SECTION

475

OFFICE OF STRUCTURE FOUNDATIONS-ENGINEERING SERVICES CENTER

As-Built Log of Test Borings sheet is considered an informational document only. As such, the State of California registration seal with signature, license number and registration certificate expiration date confirm that this is a true and accurate copy of the original document. This drawing is available and presented only for the convenience of any bidder, contractor or other interested party.

DIST.	COUNTY	ROUTE	MILE POST-TOTAL PROJECT	Sheet No.	Total Sheets
12	Ora	5	1.3/1.7	126	127

REGISTERED ENGINEER-GEOTECHNICAL — 1/6/2009 DATE

REGISTERED PROFESSIONAL ENGINEER — JUAN CHANDRA — No. 2376 — Exp. 6/30/09 — GEOTECHNICAL — STATE OF CALIFORNIA

To accompany plans dated 3-23-09

I-5/EL-CAMINO REAL SOUNDWAL

AS-BUILT LOG OF TEST BORINGS SHEET 1 OF 2

NOTE: A COPY OF THIS LOG OF TEST BORINGS IS AVAILABLE AT OFFICE OF STRUCTURE MAINTENANCE AND INVESTIGATIONS, SACRAMENTO, CALIFORNIA

CU: 12231
EA: 0G9401

BRIDGE No.	Sheet	of
55-0203	22	23

STATE OF CALIFORNIA
DEPARTMENT OF TRANSPORTATION

EL CAMINO REAL UNDERCROSSING (WIDENING)

LOG OF TEST BORINGS

SCALE	AS NOTED	BRIDGE	55-203	FILE		DRAWING	55203-16

Chg. 07209
WA. 105211

Disregard prints bearing earlier numbers → PREL. DRAWING No. PR-

I HEREBY CERTIFY THAT THIS IS A TRUE AND ACCURATE COPY OF THE ABOVE DOCUMENT TAKEN UNDER MY DIRECTION AND CONTROL ON THIS DATE IN SACRAMENTO, CALIFORNIA PURSUANT TO AUTHORIZATION BY THE DIRECTOR OF TRANSPORTATION.

DATE 11/18/83 SIGNATURE Donald Blankenship TITLE

FILENAME= 55-0203-1obt07.tif

I-136(18) I-0406(5)

FED. ROAD DIV NO.	STATE	PROJ. NO.	FISCAL YEAR	SHEET	TOTAL SHEETS
7	CAL.			120	123

DIST.	COUNTY	ROUTE	SECTION	SHEET NO.	TOTAL SHEETS
VII	Ora	5	SCIc	10	13..

DATE APPROVED: 12-1-58

OFFICE OF STRUCTURE FOUNDATIONS-ENGINEERING SERVICES CENTER

As-Built Log of Test Borings sheet is considered an informational document only. As such, the State of California registration seal with signature, license number and registration certificate expiration date confirm that this is a true and accurate copy of the original document. This drawing is available and presented only for the convenience of any bidder, contractor or other interested party.

DIST.	COUNTY	ROUTE	MILE POST-TOTAL PROJECT	Sheet No.	Total Sheets
12	Ora	5	1.3/1.7	127	127

REGISTERED ENGINEER - GEOTECHNICAL — DATE 1/6/2009

I-5/EL CAMINO REAL SOUNDWAL

AS-BUILT LOG OF TEST BORINGS SHEET 2 OF 2

NOTE: A COPY OF THIS LOG OF TEST BORINGS IS AVAILABLE AT OFFICE OF STRUCTURE MAINTENANCE AND INVESTIGATIONS, SACRAMENTO, CALIFORNIA

CU: 12231
EA: 0G9401

BRIDGE NO. 55-0203

Sheet 23 of 23

To accompany plans dated 3-23-09

REGISTERED PROFESSIONAL ENGINEER — DIAN CHANDRA — No. 2376 — Exp. 6/30/09 — GEOTECHNICAL — STATE OF CALIFORNIA

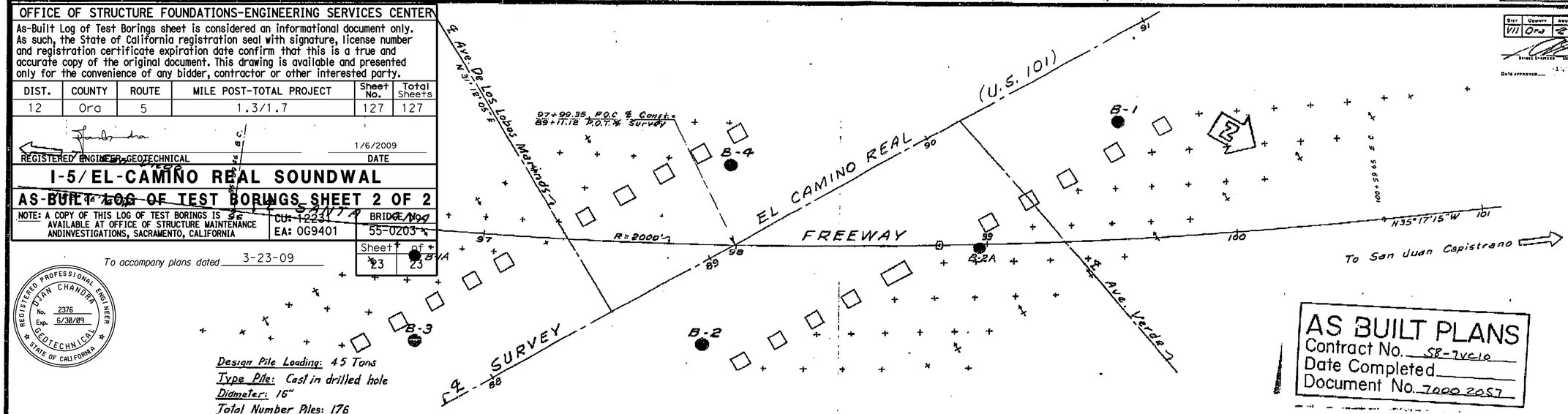

AS BUILT PLANS
Contract No. 58-7VC10
Date Completed
Document No. 7000 2057

Design Pile Loading: 45 Tons
Type Pile: Cast in drilled hole
Diameter: 16"
Total Number Piles: 176
Lineal ft. Piles "As Built": 7,457
Lineal ft. Piles called for on Plans: 7,400
Drill: Bucket Type

\+ Vertical Piles
\+ Piles battered 1:4 in direction of arrow

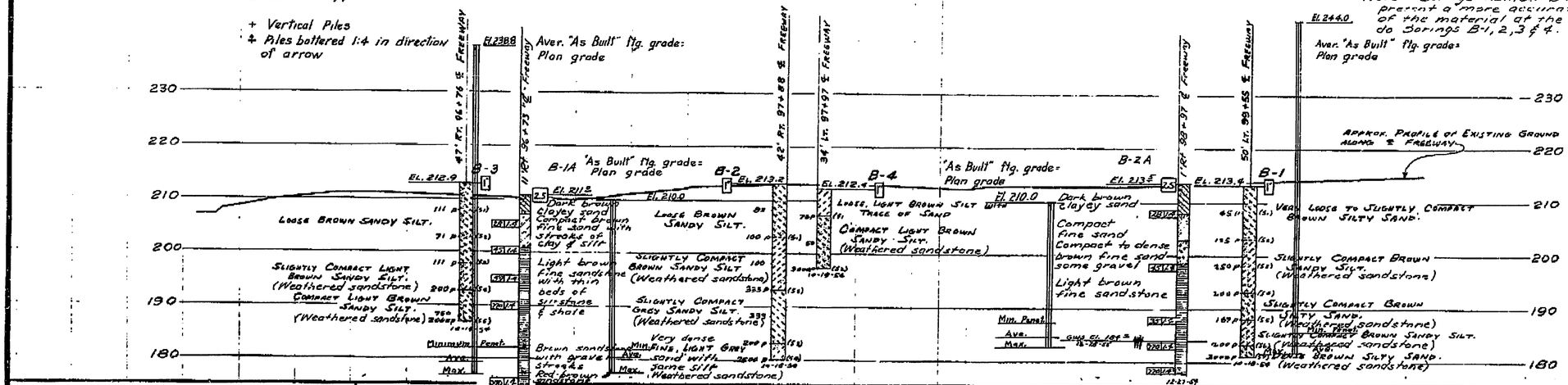

Note: Borings number B-1A & B-2A present a more accurate picture of the material at the site than do Borings B-1, 2, 3 & 4.

AS BUILT
Contract No. 58-7VC10-FI
ENGR. J. L. Burnside
Sept. 17, 1958

B.M. #10 · SCIc · 54
L & T. in P.C.C. Curb E side 101 Hwy, 105' N of Inter. Ave. Verde & 101 Hwy. Elev. 213.54 Destroyed

B.M. #11 · SCIc · 54
L & T in P.C.C. Curb S. Side Ave Santiago, 118' E. Hwy 101. Elev. 204.87

Test Borings By Bridge Dept.

FIELD STUDY — Dr. J. Mackey 10-31-58; Dr. A. Kennedy 11-21-58
DRAWN
CHECKED — Dr. A. Kennedy
Approved: J. L. Burnside, Chief Bridge Engr.

CLASSIFICATION OF MATERIAL BASED ON STANDARD GRADE SIZE LIMITS

Diagram showing the basis for estimates of grade size distribution used in determination of class names.

If gravel is present in appreciable amounts the term "gravelly" may be added to the class name, viz. "gravelly sand." The terms "coarse," "medium" and "fine" when used to describe sand, silt and gravel refer to standard grade size limits.

LEGEND OF EARTH MATERIALS

- Gravel
- Sand
- Silt
- Clay
- Sandy Clay or Clayey Sand
- Sandy Silt or Silty Sand
- Silty Clay or Clayey Silt
- Peat and/or Organic Matter
- Fill Material
- Igneous Rock
- Sedimentary Rock
- Metamorphic Rock

LEGEND OF BORING OPERATIONS

- Plan of any boring
- Penetrometer
- 2½" Cone Penetrometer
- Sampler boring (DRY)
- Rotary boring (WET)
- Auger boring (DRY)
- Jet boring
- Core boring
- Test pit

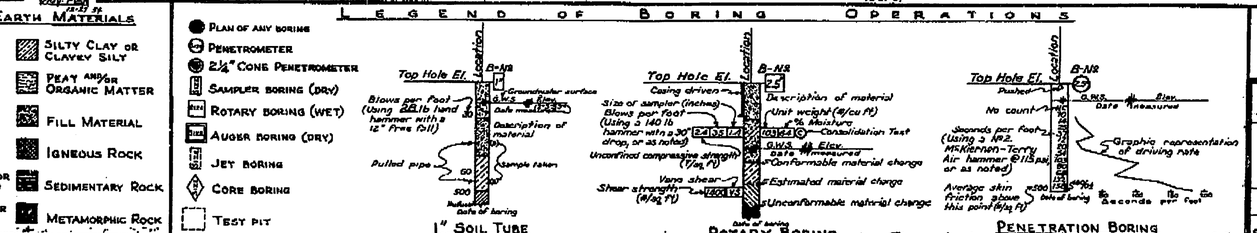

NOTES

The contractor's attention is directed to Section 2, Article (c) of the Standard Specifications and to the Special Provisions accompanying this set of plans.

Classification of earth material as shown on this sheet is based upon field inspection and is not to be construed to imply mechanical analysis.

STATE OF CALIFORNIA
DEPARTMENT OF PUBLIC WORKS
DIVISION OF HIGHWAYS

EL CAMINO REAL U.C.

LOG OF TEST BORINGS

SCALE Horiz. 1"=20' Vert. 1"=10' | BRIDGE 55-203 | FILE E-5.5 | DRAWING C-3719-10

3719 / 28

I HEREBY CERTIFY THAT THIS IS A TRUE AND ACCURATE COPY OF THE ABOVE DOCUMENT TAKEN UNDER MY DIRECTION AND CONTROL ON THIS DATE IN SACRAMENTO, CALIFORNIA PURSUANT TO AUTHORIZATION BY THE DIRECTOR OF PUBLIC WORKS.

DATE 4/21/61 SIGNATURE [illegible] TITLE M.E.C.E.

FILENAME= 55-0203-1obt08.tif

MICROFILM - STATE OF CALIFORNIA - DEPARTMENT OF PUBLIC WORKS - MICROFILM
SCALE 1"= 50' SCALE 1"= 50' SCALE 1"= 20' SCALE 1"= 20'
bPDF - www.fastio.com