| Dist | COUNTY | ROUTE | POST MILES TOTAL PROJECT | SHEET No. | TOTAL SHEETS |
|---|---|---|---|---|---|
| 12 | Ora | 91 | R0.0/R10.1 | 201 | 294 |

REGISTERED CIVIL ENGINEER 04/28/11 DATE

6-20-11
PLANS APPROVAL DATE

REGISTERED PROFESSIONAL ENGINEER
TRANG LUONG
No. C64430
Exp. 06/30/11
CIVIL
STATE OF CALIFORNIA

*THE STATE OF CALIFORNIA OR ITS OFFICERS OR AGENTS SHALL NOT BE RESPONSIBLE FOR THE ACCURACY OR COMPLETENESS OF SCANNED COPIES OF THIS PLAN SHEET.*

NOTES:

1. FOR ACCURATE RIGHT OF WAY AND ACCESS DATA, CONTACT RIGHT OF WAY ENGINEERING AT THE DISTRICT OFFICE.

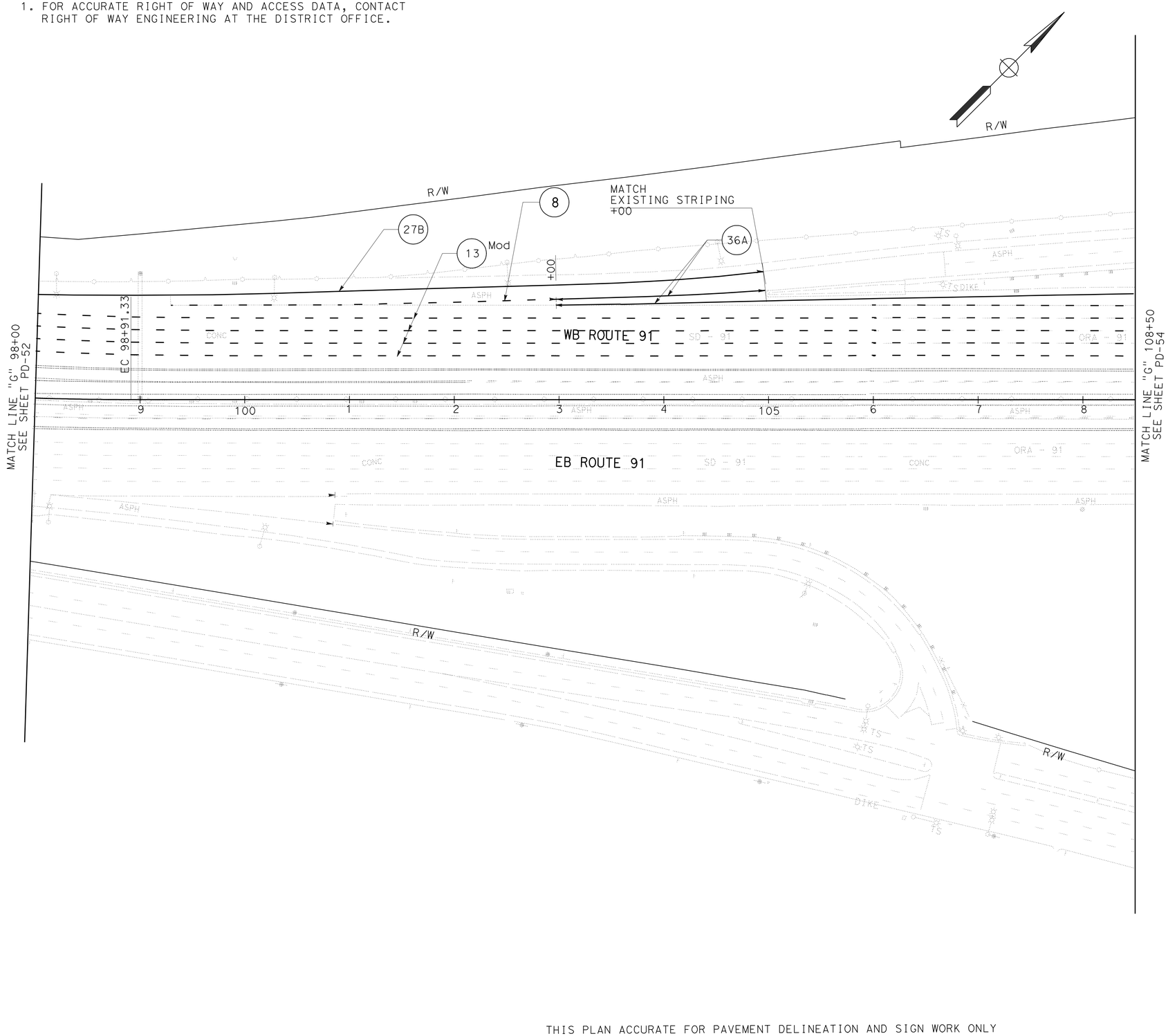


THIS PLAN ACCURATE FOR PAVEMENT DELINEATION AND SIGN WORK ONLY

# PAVEMENT DELINEATION AND SIGN PLAN

SCALE: 1"= 50'

**PD-53**

STATE OF CALIFORNIA - DEPARTMENT OF TRANSPORTATION
Caltrans
DESIGN BRANCH I

FUNCTIONAL SUPERVISOR: SON NGUYEN
CALCULATED-DESIGNED BY: RICHARD DANG
CHECKED BY: TRANG LUONG
REVISED BY: TRANG L.
DATE REVISED: 012-12-10

LAST REVISION 12-12-10
DATE PLOTTED => 21-JUN-2011
TIME PLOTTED => 07:31

| Dist | COUNTY | ROUTE | POST MILES TOTAL PROJECT | SHEET No. | TOTAL SHEETS |
|---|---|---|---|---|---|
| 12 | Ora | 91 | R0.0/R10.1 | 202 | 294 |

REGISTERED CIVIL ENGINEER 04/28/11 DATE

6-20-11
PLANS APPROVAL DATE

REGISTERED PROFESSIONAL ENGINEER TRANG LUONG No. C64430 Exp. 06/30/11 CIVIL STATE OF CALIFORNIA

*THE STATE OF CALIFORNIA OR ITS OFFICERS OR AGENTS SHALL NOT BE RESPONSIBLE FOR THE ACCURACY OR COMPLETENESS OF SCANNED COPIES OF THIS PLAN SHEET.*

## NOTES:

1. FOR ACCURATE RIGHT OF WAY AND ACCESS DATA, CONTACT RIGHT OF WAY ENGINEERING AT THE DISTRICT OFFICE.

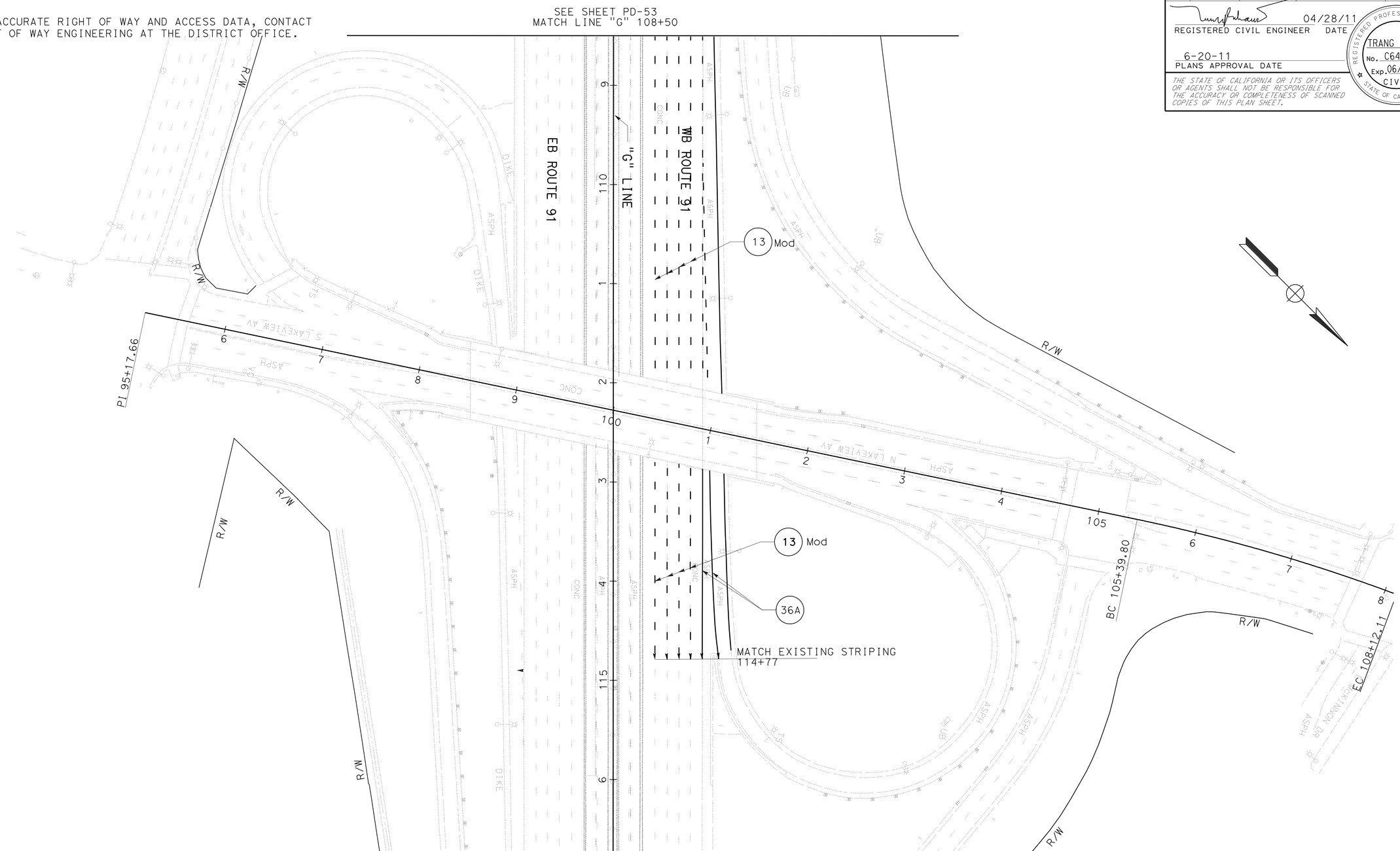


THIS PLAN ACCURATE FOR PAVEMENT DELINEATION AND SIGN WORK ONLY

# PAVEMENT DELINEATION AND SIGN PLAN

SCALE: 1"= 50'

**PD-54**

| REVISED BY | TRANG L. |
|---|---|
| DATE REVISED | 012-12-10 |
| CALCULATED-DESIGNED BY | RICHARD DANG |
| CHECKED BY | TRANG LUONG |
| FUNCTIONAL SUPERVISOR | SON NGUYEN |

STATE OF CALIFORNIA - DEPARTMENT OF TRANSPORTATION
Caltrans® DESIGN BRANCH I

LAST REVISION 12-12-10 | DATE PLOTTED => 21-JUN-2011 | TIME PLOTTED => 07:31

| Dist | COUNTY | ROUTE | POST MILES TOTAL PROJECT | SHEET No. | TOTAL SHEETS |
|---|---|---|---|---|---|
| 12 | Ora | 91 | R0.0/R10.1 | 203 | 294 |

REGISTERED CIVIL ENGINEER 04/28/11 DATE

6-20-11
PLANS APPROVAL DATE

REGISTERED PROFESSIONAL ENGINEER TRANG LUONG No. C64430 Exp. 06/30/11 CIVIL STATE OF CALIFORNIA

*THE STATE OF CALIFORNIA OR ITS OFFICERS OR AGENTS SHALL NOT BE RESPONSIBLE FOR THE ACCURACY OR COMPLETENESS OF SCANNED COPIES OF THIS PLAN SHEET.*

NOTES:

1. FOR ACCURATE RIGHT OF WAY AND ACCESS DATA, CONTACT RIGHT OF WAY ENGINEERING AT THE DISTRICT OFFICE.

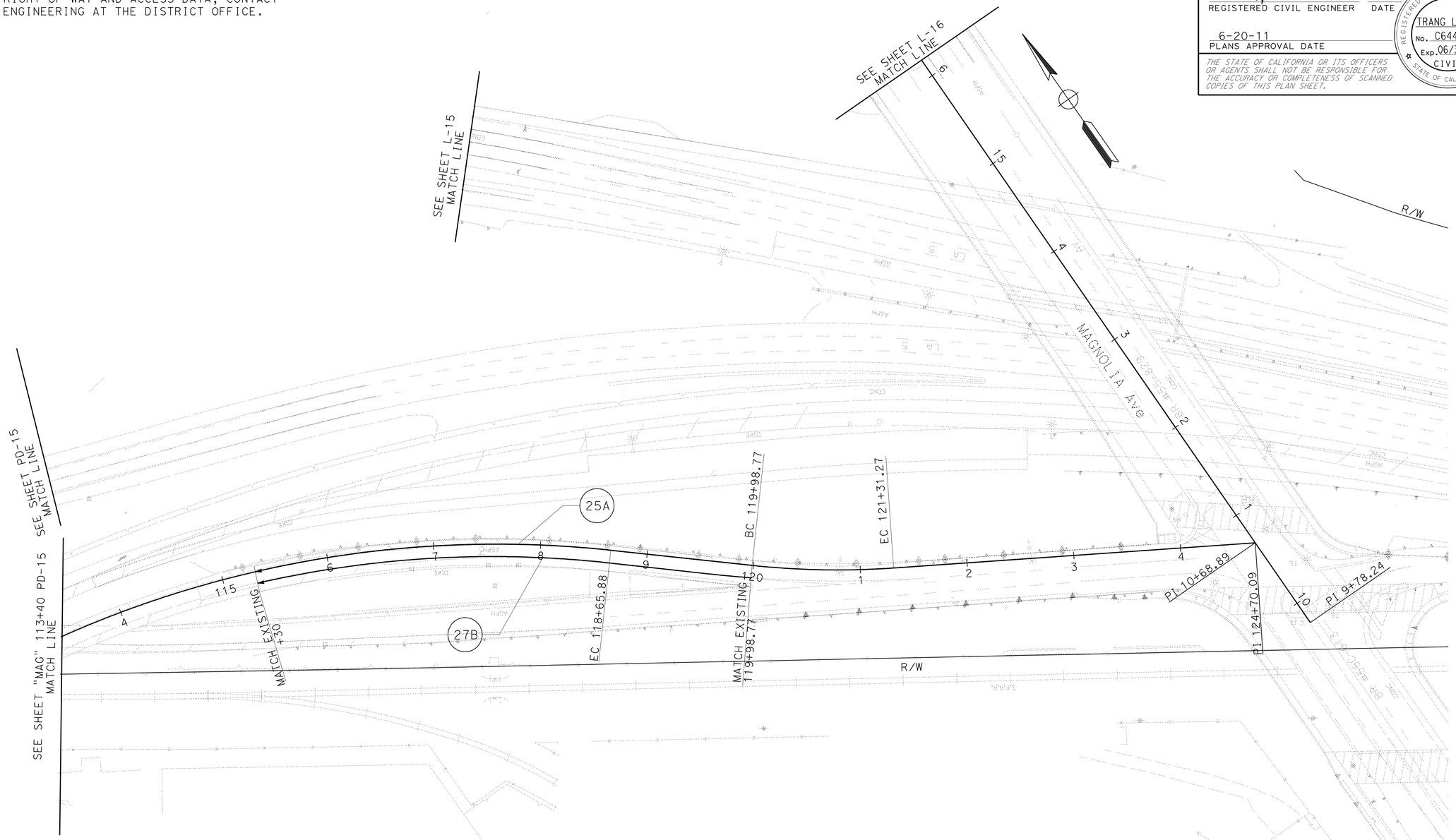


THIS PLAN ACCURATE FOR PAVEMENT DELINEATION AND SIGN WORK ONLY

# PAVEMENT DELINEATION AND SIGN PLAN

SCALE: 1"= 50'

**PD-55**

STATE OF CALIFORNIA - DEPARTMENT OF TRANSPORTATION
Caltrans® DESIGN BRANCH I

FUNCTIONAL SUPERVISOR: SON NGUYEN
CALCULATED-DESIGNED BY: RICHARD DANG
CHECKED BY: TRANG LUONG
REVISED BY: TRANG L.
DATE REVISED: 012-12-10

LAST REVISION 12-12-10 | DATE PLOTTED => 21-JUN-2011 | TIME PLOTTED => 07:31

| Dist | COUNTY | ROUTE | POST MILES TOTAL PROJECT | SHEET No. | TOTAL SHEETS |
|---|---|---|---|---|---|
| 12 | Ora | 91 | R0.0/R10.1 | 204 | 294 |

REGISTERED CIVIL ENGINEER 04/28/11 DATE

6-20-11
PLANS APPROVAL DATE

REGISTERED PROFESSIONAL ENGINEER TRANG LUONG No. C64430 Exp. 06/30/11 CIVIL STATE OF CALIFORNIA

*THE STATE OF CALIFORNIA OR ITS OFFICERS OR AGENTS SHALL NOT BE RESPONSIBLE FOR THE ACCURACY OR COMPLETENESS OF SCANNED COPIES OF THIS PLAN SHEET.*

## NOTE:

1. SEE STANDARD PLANS FOR PAVEMENT MARKING SYMBOL AND WORD DETAILS.

## LEGENDS:

- TYPE H ONE-WAY YELLOW RETROREFLECTIVE MARKER
- TYPE G ONE-WAY CLEAR RETROREFLECTIVE MARKER
- TYPE C RED-CLEAR RETROREFLECTIVE MARKER
- TYPE A WHITE NON-REFLECTIVE MARKER
- DIRECTION OF TRAFFIC
- 4" BLACK PAINT TRAFFIC STRIPE (2-COAT)
- 4" YELLOW THERMOPLASTIC TRAFFIC STRIPE
- 4" WHITE THERMOPLASTIC TRAFFIC STRIPE
- 8" WHITE THERMOPLASTIC TRAFFIC STRIPE
- 12" WHITE DIAGONAL STRIPE
- 12" YELLOW DIAGONAL STRIPE

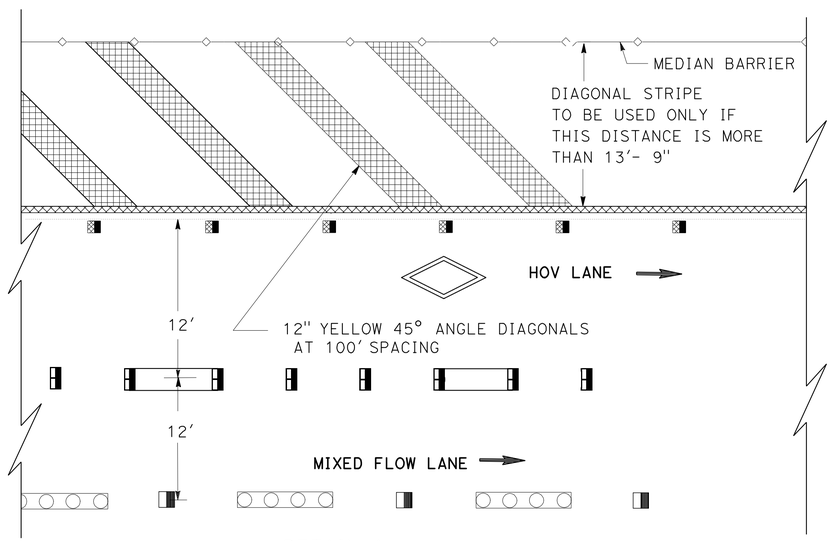


DETAIL A

DIAGONAL DETAIL FOR INSIDE SHOULDER

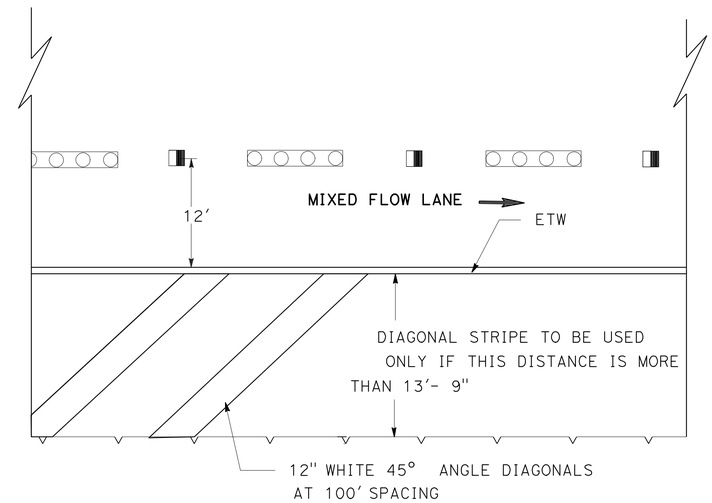


DETAIL B

DIAGONAL DETAIL FOR OUTSIDE SHOULDER

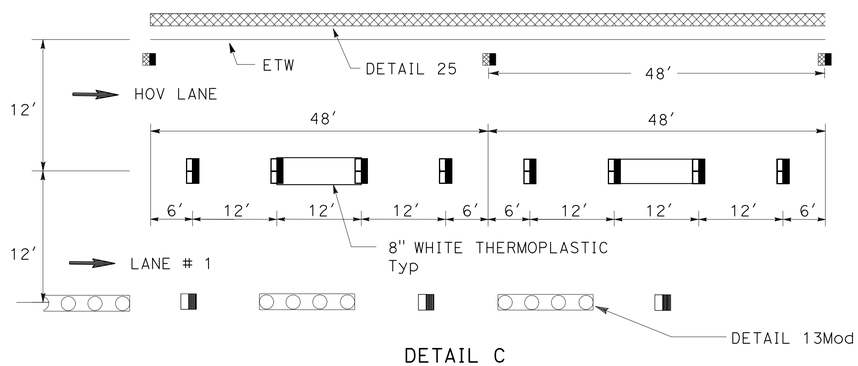


DETAIL C

DETAIL 37C Mod (AC)
HOV CONTINUOUS STRIPING DETAIL
TYPE G MARKER TYPICAL. USE TYPE C RED-CLEAR REFLECTIVE PAVEMENT MARKERS ADJACENT TO DETAIL 14 Mod IN MIXED FLOW LANES.
SEE STANDARD PLAN A20C FOR MARKER DETAILS

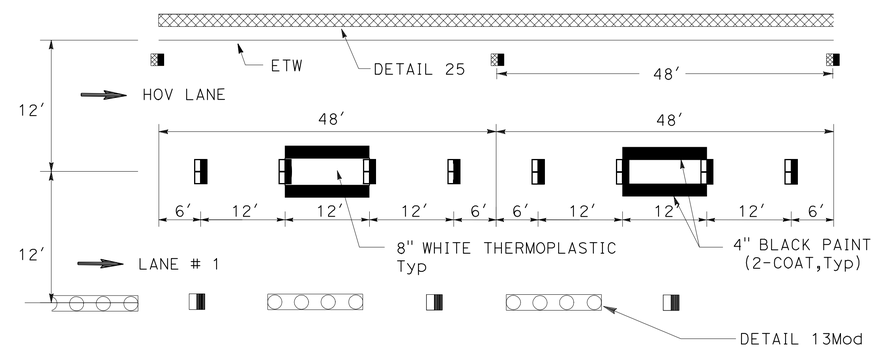


DETAIL C

DETAIL 37C Mod (PCC)
HOV CONTINUOUS STRIPING DETAIL
TYPE G MARKER TYPICAL. USE TYPE C RED-CLEAR REFLECTIVE PAVEMENT MARKERS ADJACENT TO DETAIL 14M IN MIXED FLOW LANES.
SEE STANDARD PLAN A20C FOR MARKER DETAILS

# PAVEMENT DELINEATION DETAILS

NO SCALE

**PDD-1**

STATE OF CALIFORNIA - DEPARTMENT OF TRANSPORTATION
Caltrans® TRAFFIC DESIGN

FUNCTIONAL SUPERVISOR: SON NGUYEN
CALCULATED-DESIGNED BY: RICHARD DANG
CHECKED BY: TRANG LUONG
REVISED BY
DATE REVISED

LAST REVISION 00-00-00
DATE PLOTTED => 21-JUN-2011
TIME PLOTTED => 07:31

| Dist | COUNTY | ROUTE | POST MILES TOTAL PROJECT | SHEET No. | TOTAL SHEETS |
|---|---|---|---|---|---|
| 12 | Ora | 91 | R0.0/R10.1 | 205 | 294 |

REGISTERED CIVIL ENGINEER 04/28/11 DATE

6-20-11
PLANS APPROVAL DATE

REGISTERED PROFESSIONAL ENGINEER
TRANG LUONG
No. C64430
Exp. 06/30/11
CIVIL
STATE OF CALIFORNIA

*THE STATE OF CALIFORNIA OR ITS OFFICERS OR AGENTS SHALL NOT BE RESPONSIBLE FOR THE ACCURACY OR COMPLETENESS OF SCANNED COPIES OF THIS PLAN SHEET.*

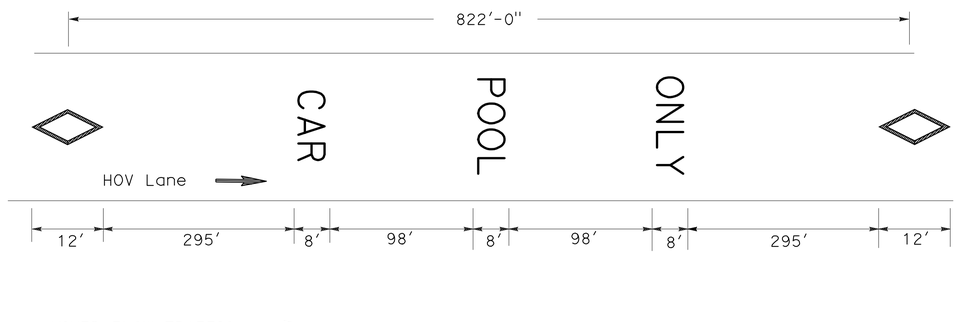


DETAIL D
TYPICAL HOV LANE PAVEMENT MARKING

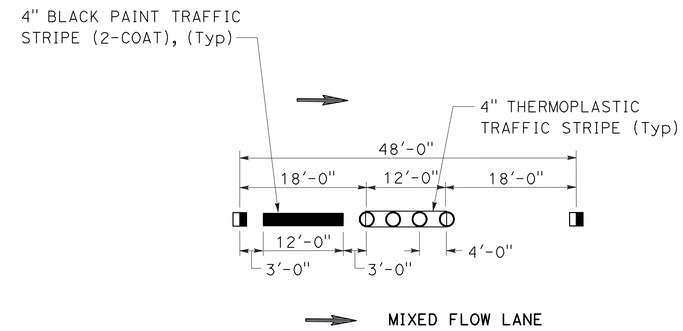


DETAIL 13 Mod

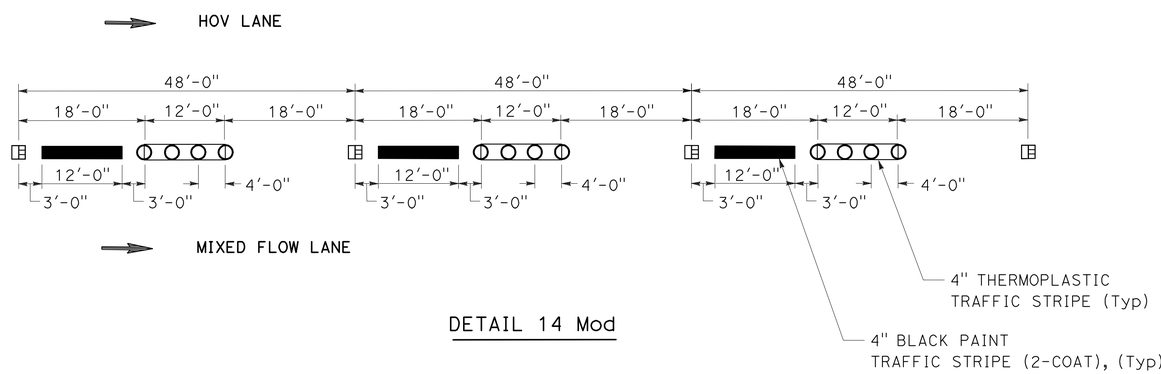


DETAIL 14 Mod

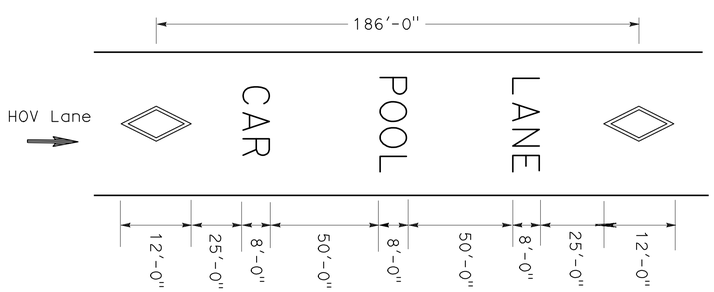


DETAIL E
TYPICAL HOV LANE PAVEMENT MARKING
ON-RAMP

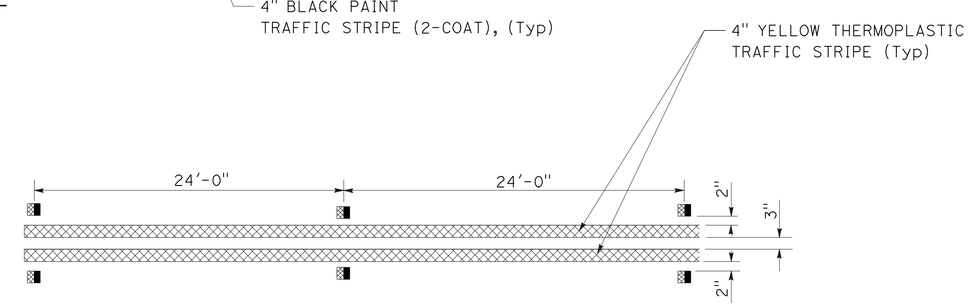


DETAIL F

# PAVEMENT DELINEATION DETAILS

NO SCALE

PDD-2

STATE OF CALIFORNIA - DEPARTMENT OF TRANSPORTATION
Caltrans® TRAFFIC DESIGN

FUNCTIONAL SUPERVISOR: SON NGUYEN
CALCULATED-DESIGNED BY: RICHARD DANG
CHECKED BY: TRANG LUONG
REVISED BY: TRANG L.
DATE REVISED: 04/11/11

LAST REVISION 00-00-00
DATE PLOTTED => 21-JUN-2011
TIME PLOTTED => 07:31

| Dist | COUNTY | ROUTE | POST MILES TOTAL PROJECT | SHEET No. | TOTAL SHEETS |
|---|---|---|---|---|---|
| 12 | Ora | 91 | R0.0/R10.1 | 206 | 294 |

REGISTERED CIVIL ENGINEER 04/28/11 DATE

6-20-11
PLANS APPROVAL DATE

REGISTERED PROFESSIONAL ENGINEER TRANG LUONG No. C64430 Exp. 06/30/11 CIVIL STATE OF CALIFORNIA

*THE STATE OF CALIFORNIA OR ITS OFFICERS OR AGENTS SHALL NOT BE RESPONSIBLE FOR THE ACCURACY OR COMPLETENESS OF SCANNED COPIES OF THIS PLAN SHEET.*

# PAVEMENT DELINEATION QUANTITIES

| SHEET No. | ALIGNMENT AND STATIONS | THERMOPLASTIC TRAFFIC STRIPE | | | | | | | | | | | | | PAINT TRAFFIC STRIPE (2-COAT) | | | THERMOPLASTIC PAVEMENT MARKING | | | | | PAVEMENT MARKER | | | | REMOVE | | | | |
|---|---|---|---|---|---|---|---|---|---|---|---|---|---|---|---|---|---|---|---|---|---|---|---|---|---|---|---|---|---|---|---|
| | | DETAIL 10 (N) | DETAIL 13 Mod 4" WHITE BROKEN (36-12) | DETAIL 14 Mod 4" WHITE BROKEN (36-12) | DETAIL 8 4" WHITE BROKEN (17-7) | DETAIL 37 (AUX) 8" WHITE BROKEN (12-3) | DETAIL C(HOV CONTINUOUS) 8" WHITE BROKEN (36-12) | DETAIL 38 8" SOLID WHITE | DETAIL 38B 8" SOLID WHITE | DETAIL 36 8" SOLID WHITE | DETAIL 36A 8" SOLID WHITE | DETAIL 36B 8" SOLID WHITE | DETAIL 27B 4" SOLID WHITE | DETAIL 25 4" SOLID YELLOW | DETAIL 25A 4" SOLID YELLOW | DETAIL 13 Mod 4" BLACK BROKEN (36-12) | DETAIL 14 Mod 4" BLACK BROKEN (36-12) | DETAIL 37C Mod 4" BLACK BROKEN (36-12) | 12" SOLID DIAGONAL YELLOW | 12" SOLID DIAGONAL WHITE | HOV DIAMOND & LETTERS | ARROW | CROSSWALK LIMIT LINE | NON-REFLECTIVE TYPE A | RETRO-REFLECTIVE TYPE H | RETRO-REFLECTIVE TYPE G | RETRO-REFLECTIVE TYPE C | YELLOW THERMOPLASTIC TRAFFIC STRIPE (HAZARDOUS WASTE) | THERMOPLASTIC TRAFFIC STRIP (WHITE) | YELLOW THERMOPLASTIC PAVEMENT MARKING (HAZARDOUS WASTE) | THERMOPLASTIC PAVEMENT MARKING | PAVEMENT MARKER |
| | | LF | LF | LF | LF | LF | LF | LF | LF | LF | LF | LF | LF | LF | LF | LF | LF | SQFT | SQFT | SQFT | SQFT | SQFT | EA | EA | EA | EA | LF | LF | SQFT | SQFT | EA |
| PD-1 | WB LINE "A" 218+92 TO 231+00 | | 3600 | | | | 1200 | | | 271 | | | 1200 | 1200 | | 3600 | | 2400 | | | 84 | | | 300 | 26 | 76 | | 3600 | 2642 | | 84 | 402 |
| | EB LINE "A" 218+92 TO 231+00 | | 3168 | 576 | | | 1200 | | | | | | 1200 | 1200 | | 3168 | 576 | 2400 | | | 84 | | | 300 | 26 | 67 | 17 | 3600 | 936 | | 84 | 410 |
| PD-2 | WB LINE "A" 231+00 TO 245+50 | | 4350 | | 297 | | 1450 | | | 262 | | | 1715 | 1450 | | 4350 | | 2900 | | | 84 | | | 364 | 32 | 104 | | 5800 | 3630 | | 84 | 500 |
| | EB LINE "A" 231+00 TO 245+50 | | 4350 | | | | 1450 | | | | | | 1450 | 1450 | | 4350 | | 2900 | | | 84 | | | 364 | 32 | 92 | | 5800 | 1450 | | 84 | 488 |
| | LINE "Ora-3" 3+60 TO 5+50 | | | | | | | | 60 | | | | 190 | | 190 | | | | | | 28 | 25 | 12 | | 4 | 12 | | | | | | |
| | LINE "Ora-1" 10+35 TO 15+50 | 200 | | | | | | | | | 265 | | 250 | | 250 | | | | | | | | 30 | 30 | 12 | 17 | | | | | | |
| PD-3 | WB LINE "A" 245+50 TO 260+00 | | 4350 | | | | 1450 | | | | | | 1450 | 1450 | | 4350 | | 2900 | | | 84 | | | 364 | 32 | 92 | | 5800 | 2538 | | 84 | 488 |
| | EB LINE "A" 245+50 TO 260+00 | | 4350 | | | | 1450 | | | | 420 | | 1770 | 1450 | | 4350 | | 2900 | | | 84 | | | 364 | 32 | 111 | | 5800 | 1408 | | 84 | 507 |
| | LINE "Ora-3" 5+50 TO 15+83 | | | | | | | 500 | | | | | 1033 | | 1033 | | | | | | 66 | | 12 | | 24 | 22 | | | | | | |
| | LINE "Ora-1" 15+50 TO 18+70 | 315 | | | | | | | | | | | 320 | | 310 | | | | | | | | 70 | 42 | 14 | 7 | | | | | | |
| PD-4 | WB LINE "A" 260+00 TO 274+00 | | 4200 | | | | 1400 | | | | | | 1400 | 1400 | | 4200 | | 2800 | | | 84 | | | 352 | 31 | 132 | | 5600 | 2450 | | 84 | 515 |
| | EB LINE "A" 260+00 TO 274+00 | | 3768 | 576 | 163 | | 1400 | | | | | | 1863 | 1400 | | 3768 | 576 | 2800 | | | 84 | | | 352 | 31 | 80 | 17 | 5600 | 1323 | | 84 | 480 |
| PD-5 | WB LINE "A" 274+00 TO 288+00 | | 3768 | 576 | | | 1400 | | | | | | 1400 | 1400 | | 3768 | 576 | 2800 | | | 84 | | | 352 | 31 | 80 | 17 | 5600 | 2723 | | 84 | 480 |
| | EB LINE "A" 274+00 TO 288+00 | | 4200 | | 125 | | 1400 | | | | | | 1400 | 1400 | | 4200 | | 2800 | | | 84 | | | 352 | 31 | 89 | | 5600 | 1175 | | 84 | 472 |
| PD-6 | WB LINE "A" 288+00 TO 302+00 | | 4200 | | | | 1400 | | | | | | 1400 | 1400 | | 4200 | | 2800 | | | 84 | | | 352 | 31 | 89 | | 5600 | 2450 | | 84 | 472 |
| | EB LINE "A" 288+00 TO 302+00 | | 3768 | 576 | | | 1400 | | | | | | 1400 | 1400 | | 3768 | 576 | 2800 | | | 84 | | | 352 | 31 | 80 | 17 | 5600 | 936 | | 84 | 480 |
| SUB TOTAL | | 515 | 48072 | 2304 | 585 | | 16600 | 500 | 60 | 533 | 685 | | 19441 | 16600 | 1783 | 48072 | 2304 | 33200 | | | 1102 | 25 | 124 | 4240 | 420 | 1150 | 68 | 64000 | 23661 | | 1008 | 5694 |
| SHEET TOTAL | | 515 | 50376 | | 585 | | 16600 | 1778 | | | | | 37824 | | | 83576 | | | | | 1251 | | | 4240 | 1638 | | | 64000 | 23661 | | 1008 | 5694 |

(N) : NOT A SEPARATE PAY ITEM, FOR INFORMATION ONLY

PAVEMENT DELINEATION QUANTITIES

PDQ-1

STATE OF CALIFORNIA - DEPARTMENT OF TRANSPORTATION
Caltrans® TRAFFIC DESIGN

FUNCTIONAL SUPERVISOR: SON NGUYEN
CALCULATED-DESIGNED BY: RICHARD DANG
CHECKED BY: TRANG LUONG
REVISED BY: TRANG L.
DATE REVISED: 04/11/11

LAST REVISION 00-00-00
DATE PLOTTED => 21-JUN-2011
TIME PLOTTED => 08:21

| Dist | COUNTY | ROUTE | POST MILES TOTAL PROJECT | SHEET No. | TOTAL SHEETS |
|---|---|---|---|---|---|
| 12 | Ora | 91 | R0.0/R10.1 | 207 | 294 |

REGISTERED CIVIL ENGINEER 04/28/11 DATE

6-20-11
PLANS APPROVAL DATE

REGISTERED PROFESSIONAL ENGINEER TRANG LUONG No. C64430 Exp. 06/30/11 CIVIL STATE OF CALIFORNIA

*THE STATE OF CALIFORNIA OR ITS OFFICERS OR AGENTS SHALL NOT BE RESPONSIBLE FOR THE ACCURACY OR COMPLETENESS OF SCANNED COPIES OF THIS PLAN SHEET.*

# PAVEMENT DELINEATION QUANTITIES

| SHEET No. | ALIGNMENT AND STATIONS | DETAIL 10 (N) | THERMOPLASTIC TRAFFIC STRIPE: DETAIL 13 Mod 4" WHITE BROKEN (36-12) | DETAIL 14 Mod 4" WHITE BROKEN (36-12) | DETAIL 8 4" WHITE BROKEN (17-7) | DETAIL 37 (AUX) 8" WHITE BROKEN (12-3) | DETAIL C(HOV CONTINUOUS) 8" WHITE BROKEN (36-12) | DETAIL 38 8" SOLID WHITE | DETAIL 38B 8" SOLID WHITE | DETAIL 36 8" SOLID WHITE | DETAIL 36A 8" SOLID WHITE | DETAIL 36B 8" SOLID WHITE | DETAIL 27B 4" SOLID WHITE | DETAIL 25 4" SOLID YELLOW | DETAIL 25A 4" SOLID YELLOW | PAINT TRAFFIC STRIPE (2-COAT): DETAIL 13 Mod 4" BLACK BROKEN (36-12) | DETAIL 14 Mod 4" BLACK BROKEN (36-12) | DETAIL 37C Mod 4" BLACK BROKEN (36-12) | THERMOPLASTIC PAVEMENT MARKING: 12" SOLID DIAGONAL YELLOW | 12" SOLID DIAGONAL WHITE | HOV DIAMOND & LETTERS | ARROW | CROSSWALK LIMIT LINE | PAVEMENT MARKER: NON-REFLECTIVE TYPE A | RETRO-REFLECTIVE TYPE H | TYPE G | TYPE C | REMOVE: YELLOW THERMOPLASTIC TRAFFIC STRIPE (HAZARDOUS WASTE) | THERMOPLASTIC TRAFFIC STRIP (WHITE) | YELLOW THERMOPLASTIC PAVEMENT MARKING (HAZARDOUS WASTE) | THERMOPLASTIC PAVEMENT MARKING | PAVEMENT MARKER |
|---|---|---|---|---|---|---|---|---|---|---|---|---|---|---|---|---|---|---|---|---|---|---|---|---|---|---|---|---|---|---|---|---|---|
| | | LF | LF | LF | LF | LF | LF | LF | LF | LF | LF | LF | LF | LF | LF | LF | LF | LF | SQFT | SQFT | SQFT | SQFT | SQFT | EA | EA | EA | EA | LF | LF | SQFT | SQFT | EA |
| PD-7 | WB LINE "A" 302+00 TO 313+50 | | 3018 | 576 | 304 | | 1150 | | | 271 | | | 1741 | 1150 | | 3018 | 576 | 2300 | | | 84 | | | 288 | 40 | 77 | 17 | 4600 | 3182 | | 84 | 422 |
| | EB LINE "A" 302+00 TO 313+50 | | 3450 | | | | 1150 | | | 540 | | | 1420 | 1150 | | 3450 | | 2300 | | | 84 | | | 288 | 25 | 97 | | 4600 | 2213 | | 84 | 410 |
| | LINE "KNT-1" 4+55.23 TO 13+50 | | | | | | | | | | | | 270 | | 270 | | | | | | 84 | | | | 15 | | | | | | 84 | 15 |
| PD-8 | WB LINE "A" 313+50 TO 322+50 | | 2700 | | | | 900 | | | | | | 900 | 900 | | 2700 | | 1800 | | | | | | 228 | 20 | 58 | | 3100 | 1575 | | | 306 |
| | EB LINE "A" 313+50 TO 322+50 | | 2700 | | | | 900 | | | | | | 900 | 900 | | 2700 | | 1800 | | | | | | 228 | 20 | 58 | | 3100 | | | | 306 |
| | LINE "KNT-1" 13+50 TO 16+68 | | | | | | | | | | | | 400 | | 400 | | | | | 120 | | 25 | 50 | | 18 | | | | | | 50 | 18 |
| | LINE "KNT-3" 17+05.93 TO 22+50 | 200 | | | | | | 270 | | | | | 550 | | 550 | | | | | 1200 | 86 | | 50 | | 70 | 12 | | | | | 1250 | 82 |
| | LINE "KNT-4" 6+17.7 TO 12+50 | 400 | | | | | | | | | | | 650 | | 650 | | | | | | 84 | 137 | | | 90 | 10 | | | | | 84 | 100 |
| PD-9 | WB LINE "A" 322+50 TO 337+00 | | 3918 | 576 | | 511 | 1450 | | 300 | 558 | | | 1171 | 1450 | | 3918 | 576 | 2900 | | | 84 | | | 364 | 32 | 150 | 65 | 5800 | 5008 | | 84 | 611 |
| | EB LINE "A" 322+50 TO 337+00 | | 4489 | | | | 1450 | | | | | 1172 | | 1450 | | 4489 | | 2900 | | | | | | 376 | 32 | 145 | | 5800 | 2016 | | | 553 |
| | LINE "KNT-3" 22+50 TO 29+61.63 | | | | | | | | | | | | 700 | | 700 | | | | | | | | | 15 | 30 | 3 | | | | | | 48 |
| | LINE "KNT-4" 12+50 TO 18+70.15 | | | | | | | | | | | | 639 | | 360 | | | | | | | | | | 16 | | | | | | | 16 |
| PD-10 | WB LINE "A" 337+00 TO 351+50 | | 4526 | 576 | | | 1450 | | | | 265 | | 1450 | 1450 | | 4526 | 576 | 2900 | | | 84 | | | 416 | 32 | 109 | 17 | 6700 | 3256 | | 84 | 574 |
| | EB LINE "A" 337+00 TO 351+50 | | 4350 | 576 | | 391 | 1450 | | 439 | | | | 1720 | 1450 | | 4350 | 576 | 2900 | | | 84 | | | 400 | 32 | 170 | 57 | 6700 | 3671 | | 84 | 659 |
| SUB TOTAL | | 600 | 29151 | 2304 | 304 | 902 | 9900 | 270 | 739 | 1369 | 265 | 1172 | 12511 | 9900 | 2930 | 29151 | 2304 | 19800 | | 1320 | 674 | 162 | 100 | 2603 | 472 | 889 | 156 | 40400 | 20921 | | 1888 | 4120 |
| SHEET TOTAL | | 600 | 31455 | | 304 | 902 | 9900 | 3815 | | | | | 25341 | | | 51255 | | | 2256 | | | | | 2603 | 1517 | | | 40400 | 20921 | | 1888 | 4120 |

(N) : NOT A SEPARATE PAY ITEM, FOR INFORMATION ONLY

STATE OF CALIFORNIA - DEPARTMENT OF TRANSPORTATION
Caltrans® TRAFFIC DESIGN

FUNCTIONAL SUPERVISOR: SON NGUYEN
CALCULATED-DESIGNED BY: TRANG LUONG
CHECKED BY: RICHARD DANG
REVISED BY: TRANG L.
DATE REVISED: 04/11/11

LAST REVISION 00-00-00
DATE PLOTTED => 21-JUN-2011
TIME PLOTTED => 08:22

| Dist | COUNTY | ROUTE | POST MILES TOTAL PROJECT | SHEET No. | TOTAL SHEETS |
|---|---|---|---|---|---|
| 12 | Ora | 91 | R0.0/R10.1 | 208 | 294 |

REGISTERED CIVIL ENGINEER 04/28/11 DATE

6-20-11
PLANS APPROVAL DATE

REGISTERED PROFESSIONAL ENGINEER TRANG LUONG No. C64430 Exp. 06/30/11 CIVIL STATE OF CALIFORNIA

THE STATE OF CALIFORNIA OR ITS OFFICERS OR AGENTS SHALL NOT BE RESPONSIBLE FOR THE ACCURACY OR COMPLETENESS OF SCANNED COPIES OF THIS PLAN SHEET.

# PAVEMENT DELINEATION QUANTITIES

| SHEET No. | ALIGNMENT AND STATIONS | THERMOPLASTIC TRAFFIC STRIPE | | | | | | | | | | | | | | PAINT TRAFFIC STRIPE (2-COAT) | | | THERMOPLASTIC PAVEMENT MARKING | | | | | PAVEMENT MARKER | | | | REMOVE | | | | |
|---|---|---|---|---|---|---|---|---|---|---|---|---|---|---|---|---|---|---|---|---|---|---|---|---|---|---|---|---|---|---|---|---|
| | | DETAIL 10 (N) | DETAIL 13 Mod 4" WHITE BROKEN (36-12) | DETAIL 14 Mod 4" WHITE BROKEN (36-12) | DETAIL 8 4" WHITE BROKEN (17-7) | DETAIL 37 (AUX) 8" WHITE BROKEN (12-3) | DETAIL C(HOV CONTINUOUS) 8" WHITE BROKEN (36-12) | DETAIL 38 8" SOLID WHITE | DETAIL 38B 8" SOLID WHITE | DETAIL 36 8" SOLID WHITE | DETAIL 36A 8" SOLID WHITE | DETAIL 36B 8" SOLID WHITE | DETAIL 27B 4" SOLID WHITE | DETAIL 25 4" SOLID YELLOW | DETAIL 25A 4" SOLID YELLOW | DETAIL 13 Mod 4" BLACK BROKEN (36-12) | DETAIL 14 Mod 4" BLACK BROKEN (36-12) | DETAIL 37C Mod 4" BLACK BROKEN (36-12) | 12" SOLID DIAGONAL YELLOW | 12" SOLID DIAGONAL WHITE | HOV DIAMOND & LETTERS | ARROW | CROSSWALK LIMIT LINE | NON-REFLECTIVE TYPE A | RETRO-REFLECTIVE TYPE H | RETRO-REFLECTIVE TYPE G | RETRO-REFLECTIVE TYPE C | YELLOW THERMOPLASTIC TRAFFIC STRIPE (HAZARDOUS WASTE) | THERMOPLASTIC TRAFFIC STRIP (WHITE) | YELLOW THERMOPLASTIC PAVEMENT MARKING (HAZARDOUS WASTE) | THERMOPLASTIC PAVEMENT MARKING | PAVEMENT MARKER |
| | | LF | LF | LF | LF | LF | LF | LF | LF | LF | LF | LF | LF | LF | LF | LF | LF | SQFT | SQFT | SQFT | SQFT | SQFT | EA | EA | EA | EA | LF | LF | SQFT | SQFT | EA |
| PD-11 | WB LINE "A" 351+50 TO 366+00 | | 4350 | | 303 | | 1450 | | | | 205 | | 1655 | 1450 | | 4350 | | 2900 | | | 84 | | | 360 | 30 | 344 | | 5800 | 3456 | | 84 | 734 |
| | EB LINE "A" 351+50 TO 366+00 | | 3826 | | | | 1450 | | | | 554 | | 2004 | 1450 | | 3826 | | 2900 | | | 84 | | | 240 | 30 | 327 | | 5800 | 2619 | | 84 | 597 |
| PD-12 | LINE "A" 366+00 TO 370+90.93 | | 3918 | 432 | | 816 | 1450 | | 300 | 540 | | | 1720 | 1450 | | 3918 | 432 | 2900 | | | 84 | | | 360 | 30 | 374 | 12 | 5800 | 4463 | | 84 | 776 |
| | LINE "B" 166+75.49 TO 176+25 | | | | | | | | | | | | | 2250 | | | | | | | 84 | | | 360 | 126 | 335 | | | | | 84 | 725 |
| PD-13 | LINE "C" 176+25 TO 191+00 | | 4425 | | | | | | | | | | 1475 | 4425 | | 4425 | | 2950 | | | 84 | 31 | | 372 | 160 | 342 | 98 | 7375 | 2531 | | 115 | 843 |
| | LINE "D" 176+25 TO 191+00 | | 4425 | | | | 1475 | | 300 | | | | 1875 | 1475 | | 4425 | | 2950 | | | 84 | 146 | | 372 | 31 | 368 | 46 | 7375 | 3531 | | 230 | 817 |
| PD-14 | LINE "C" 191+00 TO 204+00 | | 3721 | | | | | 400 | 300 | | 375 | | 1675 | 1300 | | 3600 | | | | 1200 | | | | 3300 | 91 | 114 | | 6500 | 3600 | | 1200 | 3470 |
| | LINE "D" 191+00 TO 204+00 | | 2600 | | | | 1300 | | | | | | 1300 | 2100 | | | | 2600 | | | 84 | | | 218 | 56 | 276 | | 6500 | 1950 | | 84 | 550 |
| | LINE "MAG" 103+23 TO 110+11 | 700 | | | | | | | | 300 | | | 700 | | 1300 | 2600 | | | | 130 | | 42 | | 110 | 56 | 28 | | | | | 42 | 194 |
| PD-15 | LINE "C" 204+00 TO 217+00 | | 2600 | | 300 | | | | | | 200 | | 1300 | 1300 | | | | | | | | | | 112 | 56 | 38 | | 6500 | 2650 | | | 206 |
| | LINE "D" 204+00 TO 217+00 | | 2600 | | | | 1300 | | | | | | 1300 | 1300 | | 3000 | | 2600 | | | 84 | | | 218 | 276 | 56 | | 6500 | 1950 | | 84 | 550 |
| PD-16 | LINE "C" 216+00 TO 231+00 | | 3000 | | | | | | 400 | | | | 1500 | 1500 | | 3000 | | | | | | | | 256 | 33 | 84 | | 7500 | 3050 | | | 373 |
| | LINE "D" 216+00 TO 231+00 | | 3000 | | 400 | | 1500 | | | | | | 1500 | 1500 | | | | 3000 | 300 | | | 219 | | 256 | 289 | 64 | | 7500 | 1750 | | 93 | 609 |
| SUB TOTAL | | 700 | 38465 | 432 | 1003 | 816 | 9925 | 400 | 1300 | 840 | 1334 | | 18004 | 21500 | 1300 | 27144 | 432 | 22800 | 300 | 1330 | 672 | 438 | | 3234 | 1264 | 2750 | 156 | 73150 | 31550 | | 2184 | 10444 |
| SHEET TOTAL | | 700 | 38897 | | 1003 | 816 | 9925 | 3874 | | | | | 40804 | | | 50376 | | | 2740 | | | | | 3234 | 4170 | | | 73150 | 31550 | | 2184 | 10444 |

(N) : NOT A SEPARATE PAY ITEM, FOR INFORMATION ONLY



STATE OF CALIFORNIA - DEPARTMENT OF TRANSPORTATION
Caltrans TRAFFIC DESIGN
FUNCTIONAL SUPERVISOR: SON NGUYEN
CALCULATED-DESIGNED BY: RICHARD DANG
CHECKED BY: TRANG LUONG
REVISED BY: TRANG L.
DATE REVISED: 04/11/11

LAST REVISION 00-00-00
DATE PLOTTED => 21-JUN-2011
TIME PLOTTED => 08:22

| Dist | COUNTY | ROUTE | POST MILES TOTAL PROJECT | SHEET No. | TOTAL SHEETS |
|---|---|---|---|---|---|
| 12 | Ora | 91 | R0.0/R10.1 | 209 | 294 |

REGISTERED CIVIL ENGINEER 04/28/11 DATE

6-20-11
PLANS APPROVAL DATE

REGISTERED PROFESSIONAL ENGINEER TRANG LUONG No. C64430 Exp. 06/30/11 CIVIL STATE OF CALIFORNIA

*THE STATE OF CALIFORNIA OR ITS OFFICERS OR AGENTS SHALL NOT BE RESPONSIBLE FOR THE ACCURACY OR COMPLETENESS OF SCANNED COPIES OF THIS PLAN SHEET.*

# PAVEMENT DELINEATION QUANTITIES

| SHEET No. | ALIGNMENT AND STATIONS | DETAIL 10 (N) | THERMOPLASTIC TRAFFIC STRIPE: DETAIL 13 Mod 4" WHITE BROKEN (36-12) | DETAIL 14 Mod 4" WHITE BROKEN (36-12) | DETAIL 8 4" WHITE BROKEN (17-7) | DETAIL 37 (AUX) 8" WHITE BROKEN (12-3) | DETAIL C(HOV CONTINUOUS) 8" WHITE BROKEN (36-12) | DETAIL 38 8" SOLID WHITE | DETAIL 38B 8" SOLID WHITE | DETAIL 36 8" SOLID WHITE | DETAIL 36A 8" SOLID WHITE | DETAIL 36B 8" SOLID WHITE | DETAIL 27B 4" SOLID WHITE | DETAIL 25 4" SOLID YELLOW | DETAIL 25A 4" SOLID YELLOW | PAINT TRAFFIC STRIPE (2-COAT): DETAIL 13 Mod 4" BLACK BROKEN (36-12) | DETAIL 14 Mod 4" BLACK BROKEN (36-12) | DETAIL 37C Mod 4" BLACK BROKEN (36-12) | THERMOPLASTIC PAVEMENT MARKING: 12" SOLID DIAGONAL YELLOW | 12" SOLID DIAGONAL WHITE | HOV DIAMOND & LETTERS | ARROW | CROSSWALK LIMIT LINE | PAVEMENT MARKER: NON-REFLECTIVE TYPE A | RETRO-REFLECTIVE TYPE H | TYPE G | TYPE C | REMOVE: YELLOW THERMOPLASTIC TRAFFIC STRIPE (HAZARDOUS WASTE) | THERMOPLASTIC TRAFFIC STRIP (WHITE) | YELLOW THERMOPLASTIC PAVEMENT MARKING (HAZARDOUS WASTE) | THERMOPLASTIC PAVEMENT MARKING | PAVEMENT MARKER |
|---|---|---|---|---|---|---|---|---|---|---|---|---|---|---|---|---|---|---|---|---|---|---|---|---|---|---|---|---|---|---|---|---|---|
| | | LF | LF | LF | LF | LF | LF | LF | LF | LF | LF | LF | LF | LF | LF | LF | LF | LF | SQFT | SQFT | SQFT | SQFT | SQFT | EA | EA | EA | EA | LF | LF | SQFT | SQFT | EA |
| PD-17 | WB LINE "E" 76+00 TO 90+00 | | 2800 | 480 | | 200 | | | 300 | 800 | | | 1400 | 1400 | | 2800 | | | 70 | | 84 | | | 280 | 30 | 96 | 50 | 7000 | 4820 | 70 | 84 | 456 |
| PD-17 | EB LINE "E" 76+00 TO 90+00 | | 4200 | 480 | | 600 | 1400 | | 700 | | | | 1400 | 1400 | | 4200 | | 2800 | | | 84 | | | 3240 | 30 | 2500 | 40 | 7000 | 4670 | | 84 | 5810 |
| PD-18 | WB LINE "E" 90+00 TO 104+00 | | 2800 | | | 1400 | 1400 | | | | | | 1400 | 1400 | | 2800 | | 2800 | | | 84 | | | 236 | 62 | 335 | 128 | 6000 | 3900 | | 84 | 761 |
| PD-18 | EB LINE "E" 90+00 TO 104+00 | | 4113 | 87 | | 1350 | 1400 | | 50 | | | | 1400 | 1400 | | 4113 | 87 | 2800 | | | 84 | | | 352 | 62 | 364 | 136 | 6000 | 4250 | | 84 | 914 |
| PD-19 | WB LINE "E" 104+00 TO 118+00 | | 2512 | 288 | 170 | 383 | 1400 | | | | 636 | | 1718 | 1400 | | 2512 | 288 | 2800 | | | 84 | | | 236 | 62 | 336 | 56 | 5600 | 3056 | | 84 | 690 |
| PD-19 | EB LINE "E" 104+00 TO 118+00 | 388 | 3855 | 345 | | | 1400 | | 412 | 776 | | | 1300 | 1400 | | 3855 | 345 | 2800 | | | 84 | | | 380 | 62 | 390 | 13 | 5600 | 3815 | | 84 | 845 |
| PD-20 | WB LINE "E" 118+00 TO 132+50 | | 2900 | | | | 1450 | | 126 | 472 | | | 1214 | 1450 | | 2900 | | 2900 | | | 84 | | | 244 | 64 | 339 | | 5800 | 1685 | | 84 | 647 |
| PD-20 | EB LINE "E" 118+00 TO 132+50 | | 1306 | 432 | 290 | | 1450 | | | | 682 | | | 1450 | | 1306 | 432 | 2900 | | | | | | 148 | 64 | 277 | 16 | 5800 | 635 | | | 505 |
| PD-20 | LINE "BRK-4" +00 TO +00 | 526 | | | | | | | 240 | | | | 1130 | | 894 | | | | | | | 407 | 110 | 66 | 39 | 24 | | | | | 517 | 129 |
| PD-21 | WB LINE "E" 132+50 TO 147+00 | | 2900 | 288 | | 1276 | 1450 | | 174 | | | | 1450 | 1450 | | 2900 | 288 | 2900 | | | 84 | | | 276 | 64 | 330 | 134 | 5800 | 3697 | | 84 | 804 |
| PD-21 | EB LINE "E" 132+50 TO 147+00 | | 4350 | | | | 1450 | | | | | | 1450 | 1450 | | 4350 | | 2900 | | | 84 | | | 364 | 64 | 340 | | 5800 | 1088 | | 84 | 768 |
| SUB TOTAL | | 914 | 31736 | 2400 | 460 | 5209 | 12800 | | 2002 | 2048 | 1318 | | 13862 | 14200 | 894 | 31736 | 1440 | 25600 | 70 | | 756 | 407 | 110 | 5822 | 603 | 5331 | 573 | 60400 | 31616 | 70 | 1273 | 12329 |
| SHEET TOTAL | | 914 | 34136 | | 460 | 5209 | 12800 | | 5368 | | | | 28956 | | | 58776 | | | 1343 | | | | | 5822 | 6507 | | | 60400 | 31616 | 70 | 1273 | 12329 |

(N) : NOT A SEPARATE PAY ITEM, FOR INFORMATION ONLY

| Dist | COUNTY | ROUTE | POST MILES TOTAL PROJECT | SHEET No. | TOTAL SHEETS |
|---|---|---|---|---|---|
| 12 | Ora | 91 | R0.0/R10.1 | 210 | 294 |

REGISTERED CIVIL ENGINEER 04/28/11 DATE

6-20-11
PLANS APPROVAL DATE

REGISTERED PROFESSIONAL ENGINEER TRANG LUONG No. C64430 Exp. 06/30/11 CIVIL STATE OF CALIFORNIA

*THE STATE OF CALIFORNIA OR ITS OFFICERS OR AGENTS SHALL NOT BE RESPONSIBLE FOR THE ACCURACY OR COMPLETENESS OF SCANNED COPIES OF THIS PLAN SHEET.*

# PAVEMENT DELINEATION QUANTITIES

| SHEET No. | ALIGNMENT AND STATIONS | DETAIL 10 (N) | THERMOPLASTIC TRAFFIC STRIPE: DETAIL 13 Mod 4" WHITE BROKEN (36-12) | DETAIL 14 Mod 4" WHITE BROKEN (36-12) | DETAIL 8 4" WHITE BROKEN (17-7) | DETAIL 37 (AUX) 8" WHITE BROKEN (12-3) | DETAIL C(HOV CONTINUOUS) 8" WHITE BROKEN (36-12) | DETAIL 38 8" SOLID WHITE | DETAIL 38B 8" SOLID WHITE | DETAIL 36 8" SOLID WHITE | DETAIL 36A 8" SOLID WHITE | DETAIL 36B 8" SOLID WHITE | DETAIL 27B 4" SOLID WHITE | DETAIL 25 4" SOLID YELLOW | DETAIL 25A 4" SOLID YELLOW | PAINT TRAFFIC STRIPE (2-COAT): DETAIL 13 Mod 4" BLACK BROKEN (36-12) | DETAIL 14 Mod 4" BLACK BROKEN (36-12) | DETAIL 37C Mod 4" BLACK BROKEN (36-12) | THERMOPLASTIC PAVEMENT MARKING: 12" SOLID DIAGONAL YELLOW | 12" SOLID DIAGONAL WHITE | HOV DIAMOND & LETTERS | ARROW | CROSSWALK LIMIT LINE | PAVEMENT MARKER: NON-REFLECTIVE TYPE A | RETRO-REFLECTIVE TYPE H | TYPE G | TYPE C | REMOVE: YELLOW THERMOPLASTIC TRAFFIC STRIPE (HAZARDOUS WASTE) | THERMOPLASTIC TRAFFIC STRIP (WHITE) | YELLOW THERMOPLASTIC PAVEMENT MARKING (HAZARDOUS WASTE) | THERMOPLASTIC PAVEMENT MARKING | PAVEMENT MARKER |
|---|---|---|---|---|---|---|---|---|---|---|---|---|---|---|---|---|---|---|---|---|---|---|---|---|---|---|---|---|---|---|---|---|---|
| | | LF | LF | LF | LF | LF | LF | LF | LF | LF | LF | LF | LF | LF | LF | LF | LF | LF | SQFT | SQFT | SQFT | SQFT | SQFT | EA | EA | EA | EA | LF | LF | SQFT | SQFT | EA |
| PD-22 | WB LINE "E" 147+00 TO 161+50 | | 2900 | | 162 | 1100 | 1450 | | | | 188 | | 1638 | 1450 | | 2900 | | 2900 | | | 84 | | | 244 | 64 | 356 | 104 | 5800 | 2551 | | 84 | 768 |
| PD-22 | EB LINE "E" 147+00 TO 161+50 | | 3918 | 432 | | | 1450 | | | 206 | | | 1553 | 1450 | | 3918 | 432 | 2900 | | | 84 | | | 372 | 64 | 341 | 20 | 5800 | 1578 | | 84 | 797 |
| PD-23 | WB LINE "E" 161+50 TO 176+00 | | 2612 | 288 | | | 1450 | | | | 222 | | 1672 | 1450 | | 2612 | 288 | 2900 | | | 84 | | | 240 | 30 | 308 | 8 | 7250 | 2841 | | 84 | 586 |
| PD-23 | EB LINE "E" 161+50 TO 176+00 | | 4350 | 596 | | | 1450 | | | | | | 1152 | 1450 | | 4350 | 596 | 2900 | | | 84 | | | 360 | 30 | 361 | | 5800 | 939 | | 84 | 751 |
| PD-23 | LINE "EUC-2" 61+50 TO 72+19 | 300 | | | | | | | 400 | | | | 1050 | | 752 | | | | | | 126 | 376 | 78 | 36 | 31 | 41 | | | | | 580 | 108 |
| PD-24 | WB LINE "E" 176+00 TO 190+50 | | 2612 | 288 | | 439 | 1450 | | 300 | 700 | | | 1100 | 1450 | | 2612 | 288 | 2900 | | | 84 | | | 244 | 32 | 362 | 47 | 5800 | 3253 | | 84 | 685 |
| PD-24 | EB LINE "E" 176+00 TO 190+50 | | 3918 | 432 | 100 | | 1450 | | | | 384 | | 1834 | 1450 | | 3918 | 432 | 2900 | | | 84 | | | 364 | 32 | 348 | 10 | 5800 | 2315 | | 84 | 754 |
| PD-25 | WB LINE "E" 190+50 TO 205+00 | | 2900 | | | 1450 | 1450 | | | | | | 1450 | 1450 | | 2900 | | 2900 | | | 84 | | | 244 | 32 | 346 | 136 | 5800 | 3625 | | 84 | 758 |
| PD-25 | EB LINE "E" 190+50 TO 205+00 | | 4350 | | | | 1450 | | | | | | 1450 | 1450 | | 4350 | | 2900 | | | 84 | | | 392 | 32 | 340 | | 5800 | 1088 | | 84 | 764 |
| PD-26 | WB LINE "E" 205+00 TO 219+00 | | 1712 | 288 | | | 1400 | | | | | | | 1400 | | 1712 | 288 | 2800 | | | 84 | | | 148 | 31 | 270 | | 5250 | 4550 | | 84 | 449 |
| PD-26 | EB LINE "E" 205+00 TO 219+00 | | 3774 | 432 | | | 1400 | | | 480 | | | 1640 | 1400 | | 3774 | 432 | 2800 | | | 84 | | | 356 | 31 | 341 | 10 | 5250 | 2252 | | 84 | 738 |
| SUB TOTAL | | 300 | 33046 | 2756 | 262 | 2989 | 14400 | | 700 | 1386 | 794 | | 16741 | 14400 | 752 | 33046 | 2756 | 28800 | | | 1050 | 376 | 78 | 3000 | 409 | 3414 | 335 | 58350 | 24992 | | 1420 | 7158 |
| SHEET TOTAL | | 300 | 35802 | | 262 | 2989 | 14400 | | 2880 | | | | 31893 | | | 64602 | | | 1504 | | | | | 3000 | 4158 | | | 58350 | 24992 | | 1420 | 7158 |

(N) : NOT A SEPARATE PAY ITEM, FOR INFORMATION ONLY

STATE OF CALIFORNIA - DEPARTMENT OF TRANSPORTATION
Caltrans TRAFFIC DESIGN

FUNCTIONAL SUPERVISOR: SON NGUYEN
CALCULATED-DESIGNED BY: RICHARD DANG
CHECKED BY: TRANG LUONG
REVISED BY: TRANG L.
DATE REVISED: 04/11/11

LAST REVISION 00-00-00 | DATE PLOTTED => 21-JUN-2011 | TIME PLOTTED => 08:22

| Dist | COUNTY | ROUTE | POST MILES TOTAL PROJECT | SHEET No. | TOTAL SHEETS |
|---|---|---|---|---|---|
| 12 | Ora | 91 | R0.0/R10.1 | 211 | 294 |

REGISTERED CIVIL ENGINEER 04/28/11 DATE

6-20-11
PLANS APPROVAL DATE

REGISTERED PROFESSIONAL ENGINEER TRANG LUONG No. C64430 Exp. 06/30/11 CIVIL STATE OF CALIFORNIA

*THE STATE OF CALIFORNIA OR ITS OFFICERS OR AGENTS SHALL NOT BE RESPONSIBLE FOR THE ACCURACY OR COMPLETENESS OF SCANNED COPIES OF THIS PLAN SHEET.*

# PAVEMENT DELINEATION QUANTITIES

| SHEET No. | ALIGNMENT AND STATIONS | DETAIL 10 (N) | THERMOPLASTIC TRAFFIC STRIPE: DETAIL 13 Mod 4" WHITE BROKEN (36-12) | DETAIL 14 Mod 4" WHITE BROKEN (36-12) | DETAIL 8 4" WHITE BROKEN (17-7) | DETAIL 37 (AUX) 8" WHITE BROKEN (12-3) | DETAIL C(HOV CONTINUOUS) 8" WHITE BROKEN (36-12) | DETAIL38 8" SOLID WHITE | DETAIL 38B 8" SOLID WHITE | DETAIL 36 8" SOLID WHITE | DETAIL 36A 8" SOLID WHITE | DETAIL 36B 8" SOLID WHITE | DETAIL 27B 4" SOLID WHITE | DETAIL 25 4" SOLID YELLOW | DETAIL 25A 4" SOLID YELLOW | PAINT TRAFFIC STRIPE (2-COAT): DETAIL 13 Mod 4" BLACK BROKEN (36-12) | DETAIL 14 Mod 4" BLACK BROKEN (36-12) | DETAIL 37C Mod 4" BLACK BROKEN (36-12) | THERMOPLASTIC PAVEMENT MARKING: 12" SOLID DIAGONAL YELLOW | 12" SOLID DIAGONAL WHITE | HOV DIAMOND & LETTERS | ARROW | CROSSWALK LIMIT LINE | PAVEMENT MARKER: NON-REFLECTIVE TYPE A | RETRO-REFLECTIVE TYPE H | TYPE G | TYPE C | REMOVE: YELLOW THERMOPLASTIC TRAFFIC STRIPE (HAZARDOUS WASTE) | THERMOPLASTIC TRAFFIC STRIP (WHITE) | YELLOW THERMOPLASTIC PAVEMENT MARKING (HAZARDOUS WASTE) | THERMOPLASTIC PAVEMENT MARKING | PAVEMENT MARKER |
|---|---|---|---|---|---|---|---|---|---|---|---|---|---|---|---|---|---|---|---|---|---|---|---|---|---|---|---|---|---|---|---|---|---|
| | | LF | LF | LF | LF | LF | LF | LF | LF | LF | LF | LF | LF | LF | LF | LF | LF | LF | SQFT | SQFT | SQFT | SQFT | SQFT | EA | EA | EA | EA | LF | LF | SQFT | SQFT | EA |
| PD-27 | WB LINE "E" 219+00 TO 233+00 | | 2800 | | | | 1400 | | | | | | | 1400 | | 2800 | | 2800 | | | 84 | | | 240 | 31 | 300 | | 5250 | 1050 | | 84 | 571 |
| | EB LINE "E" 219+00 TO 233+00 | | 4200 | | | | 1400 | | | | | | 1400 | 1400 | | 4200 | | 2800 | | | 84 | | | 352 | 31 | 329 | | 5250 | 1050 | | 84 | 712 |
| | LINE "HAR-4" 10+50 TO 17+00 | 375 | | | | | | 825 | | | | | 650 | | 650 | | | | | | | 368 | 150 | 54 | 28 | 49 | | | | | 518 | 131 |
| PD-28 | WB LINE "E" 233+00 TO 247+50 | | 1306 | 144 | | | 1450 | | | | | | | 1450 | | 1306 | 432 | 2900 | | | 84 | | | 120 | 32 | 270 | 10 | 5800 | 1813 | | 84 | 432 |
| | EB LINE "E" 233+00 TO 247+50 | | 2900 | 288 | | | 1450 | | | 140 | | | 1450 | 1450 | | 2900 | 288 | 2900 | | | 84 | | | 268 | 32 | 310 | 7 | 5800 | 2527 | | 84 | 617 |
| | LINE "HAR-4" 17+00 TO 23+85 | 680 | | | | | | | | | | | 685 | | 685 | | | | | | | 50 | 85 | 90 | 30 | 15 | | | | | | 135 |
| PD-29 | WB LINE "E" 247+50 TO 262+00 | | 1450 | | | | 1450 | | | | | | | 1450 | | 1450 | | 2900 | | | 84 | | | 128 | 32 | 275 | 8 | 5800 | 5075 | | 84 | 443 |
| | EB LINE "E" 247+50 TO 262+00 | | 4350 | | | 800 | 1450 | | | | 315 | 1200 | 1500 | 1450 | | 4350 | | 2900 | | | 84 | | | 364 | 32 | 460 | 72 | 5800 | 7468 | | 84 | 928 |
| PD-30 | WB LINE "E" 262+00 TO 276+50 | | 3112 | 288 | 300 | | 1450 | | 300 | 796 | | | 1765 | 1450 | | 3112 | 288 | 2900 | | | 84 | | | 284 | 32 | 328 | 8 | 5800 | 6415 | | 84 | 652 |
| | EB LINE "E" 262+00 TO 276+50 | | 3918 | 432 | | 300 | 1450 | | 130 | 740 | | | | 1450 | | 3918 | 432 | 2900 | | | 84 | | | 364 | 32 | 355 | 34 | 5800 | 4428 | | 84 | 785 |
| PD-31 | WB LINE "E" 276+50 TO 291+00 | | 2900 | | | | 1450 | | | | 370 | | 2190 | 1450 | | 2900 | | 2900 | | | 84 | | | 244 | 32 | 388 | | 5800 | 2179 | | 84 | 664 |
| | EB LINE "E" 276+50 TO 291+00 | | 4350 | | 150 | | 1450 | | 130 | | 400 | | 1820 | 1450 | | 4350 | | 2900 | | | 84 | | | 364 | 32 | 375 | | 5800 | 1868 | | 84 | 753 |
| PD-32 | WB LINE "E" 291+00 TO 305+00 | | 3638 | 432 | | 1270 | 1400 | | | | | | 1400 | 1400 | | 3638 | 432 | 2800 | | | 84 | | | 340 | 31 | 359 | 114 | 7000 | 3508 | | 84 | 844 |
| | EB LINE "E" 291+00 TO 305+00 | | 3768 | 432 | | | 1400 | | | | | | 1400 | 1400 | | 3768 | 432 | 2800 | | | 84 | | | 348 | 31 | 319 | 10 | 7000 | 1000 | | 84 | 708 |
| SUB TOTAL | | 1055 | 38692 | 2016 | 450 | 2370 | 17200 | 825 | 560 | 1676 | 1085 | 1200 | 14260 | 17200 | 1335 | 38692 | 2304 | 34400 | | | 1008 | 418 | 235 | 3560 | 438 | 4132 | 263 | 70900 | 38381 | | 1526 | 6961 |
| SHEET TOTAL | | 1055 | 40708 | | 450 | 2370 | 17200 | 5346 | | | | | 18535 | | | 75396 | | | 1661 | | | | | 3560 | 4833 | | | 70900 | 38381 | | 1526 | 6961 |

(N) : NOT A SEPARATE PAY ITEM, FOR INFORMATION ONLY

PAVEMENT DELINEATION QUANTITIES

PDQ-6

STATE OF CALIFORNIA - DEPARTMENT OF TRANSPORTATION
Caltrans TRAFFIC DESIGN

FUNCTIONAL SUPERVISOR: SON NGUYEN
CALCULATED-DESIGNED BY: RICHARD DANG
CHECKED BY: TRANG LUONG
REVISED BY: TRANG L.
DATE REVISED: 04/11/11

LAST REVISION 00-00-00
DATE PLOTTED => 21-JUN-2011
TIME PLOTTED => 08:22

| Dist | COUNTY | ROUTE | POST MILES TOTAL PROJECT | SHEET No. | TOTAL SHEETS |
|---|---|---|---|---|---|
| 12 | Ora | 91 | R0.0/R10.1 | 212 | 294 |

REGISTERED CIVIL ENGINEER 04/28/11 DATE

6-20-11
PLANS APPROVAL DATE

REGISTERED PROFESSIONAL ENGINEER TRANG LUONG No. C64430 Exp. 06/30/11 CIVIL STATE OF CALIFORNIA

*THE STATE OF CALIFORNIA OR ITS OFFICERS OR AGENTS SHALL NOT BE RESPONSIBLE FOR THE ACCURACY OR COMPLETENESS OF SCANNED COPIES OF THIS PLAN SHEET.*

# PAVEMENT DELINEATION QUANTITIES

| SHEET No. | ALIGNMENT AND STATIONS | DETAIL 10 (N) | THERMOPLASTIC TRAFFIC STRIPE: DETAIL 13 Mod 4" WHITE BROKEN (36-12) | DETAIL 14 Mod 4" WHITE BROKEN (36-12) | DETAIL 8 4" WHITE BROKEN (17-7) | DETAIL 37 (AUX) 8" WHITE BROKEN (12-3) | DETAIL C(HOV CONTINUOUS) 8" WHITE BROKEN (36-12) | DETAIL 38 8" SOLID WHITE | DETAIL 38B 8" SOLID WHITE | DETAIL 36 8" SOLID WHITE | DETAIL 36A 8" SOLID WHITE | DETAIL 36B 8" SOLID WHITE | DETAIL 27B 4" SOLID WHITE | DETAIL 25 4" SOLID YELLOW | DETAIL 25A 4" SOLID YELLOW | PAINT TRAFFIC STRIPE (2-COAT): DETAIL 13 Mod 4" BLACK BROKEN (36-12) | DETAIL 14 Mod 4" BLACK BROKEN (36-12) | DETAIL 37C Mod 4" BLACK BROKEN (36-12) | THERMOPLASTIC PAVEMENT MARKING: 12" SOLID DIAGONAL YELLOW | 12" SOLID DIAGONAL WHITE | HOV DIAMOND & LETTERS | ARROW | CROSSWALK LIMIT LINE | PAVEMENT MARKER: NON-REFLECTIVE TYPE A | RETRO-REFLECTIVE TYPE H | TYPE G | TYPE C | REMOVE: YELLOW THERMOPLASTIC TRAFFIC STRIPE (HAZARDOUS WASTE) | THERMOPLASTIC TRAFFIC STRIP (WHITE) | YELLOW THERMOPLASTIC PAVEMENT MARKING (HAZARDOUS WASTE) | THERMOPLASTIC PAVEMENT MARKING | PAVEMENT MARKER |
|---|---|---|---|---|---|---|---|---|---|---|---|---|---|---|---|---|---|---|---|---|---|---|---|---|---|---|---|---|---|---|---|---|---|
| | | LF | LF | LF | LF | LF | LF | LF | LF | LF | LF | LF | LF | LF | LF | LF | LF | LF | SQFT | SQFT | SQFT | SQFT | SQFT | EA | EA | EA | EA | LF | LF | SQFT | SQFT | EA |
| PD-33 | WB LINE "E" 305+00 TO 319+50 | | 4350 | | 50 | | 1450 | | | | | | 1450 | 1450 | | 4350 | | 2900 | | | | | | 364 | 32 | 340 | | 5800 | 1138 | | | 736 |
| | EB LINE "E" 305+00 TO 319+50 | | 4350 | 432 | | | 1450 | | 170 | | | | 1450 | 1450 | | 4350 | 432 | 2900 | | | | | | 400 | 32 | 358 | 10 | 5800 | 1488 | | | 790 |
| PD-34 | WB LINE "E" 319+50 TO 333+50 | | 2512 | 288 | 194 | | 1400 | | | | 420 | | 1820 | 1400 | | 2512 | 288 | 2800 | | | | | | 236 | 31 | 313 | 7 | 5600 | 2124 | | | 587 |
| | EB LINE "E" 319+50 TO 333+50 | | 3462 | 432 | | 450 | 1400 | | | 780 | | | 1820 | 1400 | | 3462 | 432 | 2800 | | | | | | 328 | 31 | 360 | 52 | 5600 | 3854 | | | 771 |
| | LINE "STC-4" 32+25 TO 33+30 | | | | | | | | 180 | | | | 100 | | 100 | | | | | | | 157 | 120 | | 5 | 20 | | | | | | |
| PD-35 | WB LINE "E" 333+50 TO 347+50 | | 2512 | 288 | | | | | 300 | 900 | | | 2180 | 1400 | | 2512 | 288 | | | | | 126 | | 236 | 31 | 88 | 7 | | | | | 362 |
| | EB LINE "E" 333+50 TO 347+50 | | 3435 | | | 1400 | 1400 | | | 1060 | 315 | | 1715 | 1400 | | 3435 | | | | | | | | 292 | 31 | 409 | 128 | | | | | 860 |
| | LINE "STC-4" 33+30 TO 35+32 | 88 | | | | | | | 228 | | | | 202 | | 202 | | | | | | | 157 | | 20 | 10 | 27 | | | | | | |
| PD-36 | WB LINE "E" 347+50 TO 362+00 | | 2900 | | | | 1450 | | | | 30 | | 1450 | 1450 | | 2900 | | | | | | | | 240 | 32 | 314 | | | | | | 586 |
| | EB LINE "E" 347+50 TO 362+00 | | | 288 | | 550 | 1450 | | 300 | 1200 | | | 550 | 1450 | | | 288 | | | | | | | 24 | 32 | 345 | 63 | | 675 | | | 464 |
| PD-37 | WB LINE "F" 362+00 TO 373+00 | | 2200 | | | | 1100 | | | | 470 | | 1100 | 1100 | | 2200 | | 2200 | | | 84 | | | | 24 | 240 | 184 | 4400 | 1490 | | 84 | 448 |
| | EB LINE "F" 362+00 TO 373+00 | | 2200 | | | | 1100 | | | | | | 1100 | 1100 | | 2200 | | 2200 | | | 84 | | | | 24 | 240 | 184 | 4400 | 550 | | 84 | 448 |
| PD-38 | WB LINE "F" 373+00 TO 387+00 | | 2800 | | | | 1400 | | | | | | 1400 | 1400 | | 2800 | | 2800 | | | 84 | | | | 30 | 300 | 240 | 5600 | 1000 | | 84 | 570 |
| | EB LINE "F" 373+00 TO 387+00 | | 2800 | | | | 1400 | | | | | | 1400 | 1400 | | 2800 | | 2800 | | | 84 | | | | 30 | 300 | 240 | 5600 | 1000 | | 84 | 570 |
| SUB TOTAL | | 88 | 33521 | 1728 | 244 | 2400 | 15000 | | 1178 | 3940 | 1235 | | 17737 | 16400 | 302 | 33521 | 1728 | 21400 | | | 336 | 440 | 120 | 2140 | 375 | 3654 | 1115 | 42800 | 13319 | | 336 | 7192 |
| SHEET TOTAL | | 88 | 35249 | | 244 | 2400 | 15000 | | 6353 | | | | 34439 | | | 56649 | | | | | 896 | | | 2140 | 5144 | | | 42800 | 13319 | | 336 | 7192 |

(N) : NOT A SEPARATE PAY ITEM, FOR INFORMATION ONLY

PAVEMENT DELINEATION QUANTITIES

PDQ-7

STATE OF CALIFORNIA - DEPARTMENT OF TRANSPORTATION
Caltrans® TRAFFIC DESIGN

FUNCTIONAL SUPERVISOR: SON NGUYEN
CALCULATED-DESIGNED BY: TRANG LUONG
CHECKED BY: RICHARD DANG
REVISED BY: TRANG L.
DATE REVISED: 04/11/11

LAST REVISION 00-00-00 | DATE PLOTTED => 21-JUN-2011 | TIME PLOTTED => 08:22

| Dist | COUNTY | ROUTE | POST MILES TOTAL PROJECT | SHEET No. | TOTAL SHEETS |
|---|---|---|---|---|---|
| 12 | Ora | 91 | R0.0/R10.1 | 213 | 294 |

REGISTERED CIVIL ENGINEER 04/28/11 DATE

6-20-11
PLANS APPROVAL DATE

REGISTERED PROFESSIONAL ENGINEER TRANG LUONG No. C64430 Exp. 06/30/11 CIVIL STATE OF CALIFORNIA

*THE STATE OF CALIFORNIA OR ITS OFFICERS OR AGENTS SHALL NOT BE RESPONSIBLE FOR THE ACCURACY OR COMPLETENESS OF SCANNED COPIES OF THIS PLAN SHEET.*

# PAVEMENT DELINEATION QUANTITIES

| SHEET No. | ALIGNMENT AND STATIONS | THERMOPLASTIC TRAFFIC STRIPE | | | | | | | | | | | | | PAINT TRAFFIC STRIPE (2-COAT) | | | THERMOPLASTIC PAVEMENT MARKING | | | | | PAVEMENT MARKER | | | | REMOVE | | | | |
|---|---|---|---|---|---|---|---|---|---|---|---|---|---|---|---|---|---|---|---|---|---|---|---|---|---|---|---|---|---|---|---|---|
| | | DETAIL 10 (N) | DETAIL 13 Mod 4" WHITE BROKEN (36-12) | DETAIL 14 Mod 4" WHITE BROKEN (36-12) | DETAIL 8 4" WHITE BROKEN (17-7) | DETAIL 37 (AUX) 8" WHITE BROKEN (12-3) | DETAIL C(HOV CONTINUOUS) 8" WHITE BROKEN (36-12) | DETAIL 38 8" SOLID WHITE | DETAIL 38B 8" SOLID WHITE | DETAIL 36 8" SOLID WHITE | DETAIL 36A 8" SOLID WHITE | DETAIL 36B 8" SOLID WHITE | DETAIL 27B 4" SOLID WHITE | DETAIL 25 4" SOLID YELLOW | DETAIL 25A 4" SOLID YELLOW | DETAIL 13 Mod 4" BLACK BROKEN (36-12) | DETAIL 14 Mod 4" BLACK BROKEN (36-12) | DETAIL 37C Mod 4" BLACK BROKEN (36-12) | 12" SOLID DIAGONAL YELLOW | 12" SOLID DIAGONAL WHITE | HOV DIAMOND & LETTERS | ARROW | CROSSWALK LIMIT LINE | NON-REFLECTIVE TYPE A | RETRO-REFLECTIVE TYPE H | RETRO-REFLECTIVE TYPE G | RETRO-REFLECTIVE TYPE C | YELLOW THERMOPLASTIC TRAFFIC STRIPE (HAZARDOUS WASTE) | THERMOPLASTIC TRAFFIC STRIP (WHITE) | YELLOW THERMOPLASTIC PAVEMENT MARKING (HAZARDOUS WASTE) | THERMOPLASTIC PAVEMENT MARKING | PAVEMENT MARKER |
| | | LF | LF | LF | LF | LF | LF | LF | LF | LF | LF | LF | LF | LF | LF | LF | LF | SQFT | SQFT | SQFT | SQFT | SQFT | EA | EA | EA | EA | LF | LF | SQFT | SQFT | EA |
| PD-39 | WB LINE "F" 387+00 TO 401+00 | | 2800 | | | | 1400 | | | 1000 | | | 1400 | 1400 | | 2800 | | 2800 | | | | | | 240 | 31 | 343 | | 7000 | 4100 | | | 614 |
| | EB LINE "F" 387+00 TO 401+00 | | 3331 | 432 | | 500 | 1400 | | | | 225 | | 1625 | 1400 | | 3331 | 432 | 2800 | | | | | | 316 | 31 | 337 | 66 | 6300 | 4016 | | | 750 |
| PD-40 | WB LINE "F" 401+00 TO 415+00 | | 3768 | 432 | | 1075 | 1400 | | 300 | | | | 1400 | 1400 | | 3768 | 432 | 2800 | | | | | | 369 | 31 | 529 | 106 | 7000 | 5200 | | | 1035 |
| | EB LINE "F" 401+00 TO 415+00 | | 3290 | | | 1400 | 1400 | | | | | | 1400 | 1400 | | 3290 | | 2800 | | | | 84 | | 280 | 31 | 342 | 128 | 7000 | 5023 | | 84 | 781 |
| PD-41 | WB LINE "F" 415+00 TO 428+50 | | 4050 | 288 | | 1350 | 1350 | | | | | | 1350 | 1350 | | 4050 | 288 | 2700 | | | | | | 340 | 30 | 358 | 120 | 6750 | 5134 | | | 848 |
| | EB LINE "F" 415+00 TO 428+50 | | 2412 | 432 | | 350 | 1350 | | 450 | 800 | | | 1750 | 1350 | | 2412 | 432 | 2700 | | | | | | 224 | 30 | 376 | 39 | 6750 | 5661 | | | 669 |
| PD-42 | WB LINE "F" 428+50 TO 438+50 | | 2318 | | | | 1000 | | | 696 | | | 1415 | 1000 | | 2318 | | 2000 | | | | | | 228 | 21 | 218 | 12 | 5000 | 3387 | | | 479 |
| | EB LINE "F" 428+50 TO 438+50 | | 2000 | | | | 1000 | | | | 200 | | 1696 | 1000 | | 2000 | | 2000 | | | | | | 168 | 21 | 244 | | 5000 | 2236 | | | 433 |
| | LINE "KRA-1" 33+10 TO 39+00 | 310 | | | 250 | | | | | | 400 | | 590 | | 530 | | | | | | | | 24 | 48 | 23 | 26 | | | | | | |
| | LINE "GLA-1" 38+66 TO 39+12 | | | | | | | | | | | | 46 | | 46 | | | | | | | | 15 | | 3 | | | | | | | |
| PD-43 | WB LINE "F" 438+50 TO 446+50 | | 2400 | | | | 800 | | | | | | 10000 | 800 | | 2400 | | 1600 | | | | | | 204 | 17 | 198 | | 4000 | 1600 | | | 419 |
| | EB LINE "F" 438+50 TO 446+50 | | 1600 | | | | 800 | | | | | | 800 | 800 | | 1600 | | 1600 | | | | | | 72 | 17 | 172 | | 4000 | 1200 | | | 261 |
| | LINE "KRA-1" 39+00 TO 43+50 | 450 | | | | | | | | | | | 450 | | 450 | | | | | | 66 | | | 66 | 20 | 11 | | | | | | |
| | LINE "GLA-1" 39+12 TO 43+50 | | | | | | | | | | | | 438 | | 438 | | | | 245 | | 33 | 20 | | | 20 | | | | | | | |
| | LINE "KRA-2" 40+75 TO 42+75 | | | | | | | 600 | 400 | | | | 200 | | 200 | | | | | | 157 | 50 | | | 10 | 40 | | | | | | |
| | LINE "GLA-3" 33+00 TO 51+15 | | | | | | | | | | | 130 | 1815 | | 1815 | | | | 150 | 168 | 92 | 12 | | | 77 | 32 | | | | | | |
| SUB TOTAL | | 760 | 27969 | 1584 | 250 | 4675 | 11900 | 600 | 1150 | 2496 | 825 | 130 | 26375 | 11900 | 3479 | 27969 | 1584 | 23800 | | 395 | 168 | 432 | 121 | 2555 | 413 | 3226 | 471 | 58800 | 37557 | | 84 | 6289 |
| SHEET TOTAL | | 760 | 29553 | | 250 | 4675 | 11900 | 5201 | | | | | 41754 | | | 53353 | | | 1116 | | | | | 2555 | 4110 | | | 58800 | 37557 | | 84 | 6289 |

(N) : NOT A SEPARATE PAY ITEM, FOR INFORMATION ONLY

PAVEMENT DELINEATION QUANTITIES

PDQ-8

STATE OF CALIFORNIA - DEPARTMENT OF TRANSPORTATION
Caltrans TRAFFIC DESIGN

FUNCTIONAL SUPERVISOR: SON NGUYEN
CALCULATED-DESIGNED BY: RICHARD DANG
CHECKED BY: TRANG LUONG
REVISED BY: TRANG L.
DATE REVISED: 04/11/11

LAST REVISION 00-00-00 | DATE PLOTTED => 21-JUN-2011 | TIME PLOTTED => 08:22

| Dist | COUNTY | ROUTE | POST MILES TOTAL PROJECT | SHEET No. | TOTAL SHEETS |
|---|---|---|---|---|---|
| 12 | Ora | 91 | R0.0/R10.1 | 214 | 294 |

REGISTERED CIVIL ENGINEER 04/28/11 DATE

6-20-11
PLANS APPROVAL DATE

REGISTERED PROFESSIONAL ENGINEER TRANG LUONG No. C64430 Exp. 06/30/11 CIVIL STATE OF CALIFORNIA

*THE STATE OF CALIFORNIA OR ITS OFFICERS OR AGENTS SHALL NOT BE RESPONSIBLE FOR THE ACCURACY OR COMPLETENESS OF SCANNED COPIES OF THIS PLAN SHEET.*

# PAVEMENT DELINEATION QUANTITIES

| SHEET No. | ALIGNMENT AND STATIONS | DETAIL 10 (N) | THERMOPLASTIC TRAFFIC STRIPE | | | | | | | | | | | | | PAINT TRAFFIC STRIPE (2-COAT) | | | THERMOPLASTIC PAVEMENT MARKING | | | | | PAVEMENT MARKER | | | | REMOVE | | | | |
|---|---|---|---|---|---|---|---|---|---|---|---|---|---|---|---|---|---|---|---|---|---|---|---|---|---|---|---|---|---|---|---|---|
| | | | DETAIL 13 Mod 4" WHITE BROKEN (36-12) | DETAIL 14 Mod 4" WHITE BROKEN (36-12) | DETAIL 8 4" WHITE BROKEN (17-7) | DETAIL 37 (AUX) 8" WHITE BROKEN (12-3) | DETAIL C(HOV CONTINUOUS) 8" WHITE BROKEN (36-12) | DETAIL 38 8" SOLID WHITE | DETAIL 38B 8" SOLID WHITE | DETAIL 36 8" SOLID WHITE | DETAIL 36A 8" SOLID WHITE | DETAIL 36B 8" SOLID WHITE | DETAIL 27B 4" SOLID WHITE | DETAIL 25 4" SOLID YELLOW | DETAIL 25A 4" SOLID YELLOW | DETAIL 13 Mod 4" BLACK BROKEN (36-12) | DETAIL 14 Mod 4" BLACK BROKEN (36-12) | DETAIL 37C Mod 4" BLACK BROKEN (36-12) | 12" SOLID DIAGONAL YELLOW | 12" SOLID DIAGONAL WHITE | HOV DIAMOND & LETTERS | ARROW | CROSSWALK LIMIT LINE | NON-REFLECTIVE | RETRO-REFLECTIVE | | | YELLOW THERMOPLASTIC TRAFFIC STRIPE (HAZARDOUS WASTE) | THERMOPLASTIC TRAFFIC STRIP (WHITE) | YELLOW THERMOPLASTIC PAVEMENT MARKING (HAZARDOUS WASTE) | THERMOPLASTIC PAVEMENT MARKING | PAVEMENT MARKER |
| | | | | | | | | | | | | | | | | | | | | | | | | TYPE A | TYPE H | TYPE G | TYPE C | | | | | |
| | | LF | LF | LF | LF | LF | LF | LF | LF | LF | LF | LF | LF | LF | LF | LF | LF | SQFT | SQFT | SQFT | SQFT | SQFT | EA | EA | EA | EA | LF | LF | SQFT | SQFT | EA |
| PD-44 | WB LINE "F" 446+50 TO 461+00 | | 3918 | 432 | | | 1450 | | | | | | 1540 | 1450 | | 3918 | 432 | 2900 | | | | | | 144 | 30 | 328 | 12 | 7250 | 2628 | | | 514 |
| | EB LINE "F" 446+50 TO 461+00 | | 2612 | 288 | | | 1450 | | | | | | | 1450 | | 2612 | 288 | 2900 | | | | | | 96 | 30 | 379 | 8 | 7250 | 725 | | | 513 |
| PD-45 | WB LINE "F" 461+00 TO 475+50 | | 5800 | | | | 1450 | | | | | | 1450 | 1450 | | 5800 | | 2900 | | | | | | 480 | 30 | 242 | | 7250 | 2900 | | | 752 |
| | EB LINE "F" 461+00 TO 475+50 | | 4350 | | | | 1450 | | | | | 100 | 1450 | 1450 | | 4350 | | 2900 | | | 62 | | | 360 | 30 | 335 | | 7250 | 2558 | | 62 | 725 |
| PD-46 | WB LINE "F" 475+50 TO 489+50 | | 4818 | 432 | | | 750 | | | | 350 | | 1400 | 1400 | | 4818 | 432 | 1500 | | | | | | 436 | 30 | 241 | 12 | 4400 | 3413 | | | 719 |
| | EB LINE "F" 475+50 TO 489+50 | | 2798 | 432 | | | 1400 | | 300 | 928 | | | 1400 | 1400 | | 2798 | 432 | 2800 | | | 33 | | | 268 | 30 | 360 | 12 | 7000 | 4574 | | 33 | 670 |
| PD-47 | WB LINE "F" 489+50 TO 503+50 | | 4200 | | | | | | | 300 | | | 1400 | 1400 | | 4200 | | | | | | | | 360 | 30 | 103 | | 7000 | 3050 | | | 493 |
| | EB LINE "F" 489+50 TO 503+50 | | 4200 | | | | | | | | | | 1400 | 1400 | | 4200 | | | | | | | | 360 | 30 | 90 | | 7000 | 2450 | | | 480 |
| | LINE "TUS-1" 89+50 TO 97+05 | | | | 400 | | | | | | | | 750 | | 750 | | | | | | | 50 | 130 | | 32 | 10 | | | | | 130 | 42 |
| PD-48 | WB LINE "F" 503+50 TO 517+50 | | 3386 | 432 | | | 1250 | | 300 | 164 | | | 1400 | 1400 | | 3386 | 432 | 2500 | | | | | | 320 | 30 | 314 | 12 | 6400 | 3283 | | | 676 |
| | EB LINE "F" 503+50 TO 517+50 | | 4200 | | | | 700 | | | | | | 1400 | 1400 | | 4200 | | 1400 | | | | | | 360 | 30 | 208 | | 4200 | 2450 | | | 598 |
| SUB TOTAL | | | 40282 | 2016 | 400 | | 9900 | | 600 | 1392 | 350 | 100 | 13590 | 14200 | 750 | 40282 | 2016 | 19800 | | | 95 | 50 | 130 | 3184 | 332 | 2610 | 56 | 65000 | 28031 | | 225 | 6182 |
| SHEET TOTAL | | | 42298 | | 400 | | 9900 | 2442 | | | | | 28540 | | | 62098 | | | 275 | | | | | 3184 | 2998 | | | 65000 | 28031 | | 225 | 6182 |

(N) : NOT A SEPARATE PAY ITEM, FOR INFORMATION ONLY




STATE OF CALIFORNIA - DEPARTMENT OF TRANSPORTATION
Caltrans TRAFFIC DESIGN
FUNCTIONAL SUPERVISOR SON NGUYEN
CALCULATED-DESIGNED BY TRANG LUONG
CHECKED BY RICHARD DANG
REVISED BY TRANG L.
DATE REVISED 04/11/11
LAST REVISION 00-00-00
DATE PLOTTED => 21-JUN-2011
TIME PLOTTED => 08:22
BORDER LAST REVISED 7/2/2010
USERNAME => trcarol
DGN FILE => 1200020045nc009.dgn
RELATIVE BORDER SCALE IS IN INCHES 0 1 2 3
UNIT 3004
PROJECT NUMBER & PHASE 12000200451

| Dist | COUNTY | ROUTE | POST MILES TOTAL PROJECT | SHEET No. | TOTAL SHEETS |
|---|---|---|---|---|---|
| 12 | Ora | 91 | R0.0/R10.1 | 215 | 294 |

REGISTERED CIVIL ENGINEER 04/28/11 DATE

6-20-11
PLANS APPROVAL DATE

REGISTERED PROFESSIONAL ENGINEER TRANG LUONG No. C64430 Exp. 06/30/11 CIVIL STATE OF CALIFORNIA

THE STATE OF CALIFORNIA OR ITS OFFICERS OR AGENTS SHALL NOT BE RESPONSIBLE FOR THE ACCURACY OR COMPLETENESS OF SCANNED COPIES OF THIS PLAN SHEET.

# PAVEMENT DELINEATION QUANTITIES

| SHEET No. | ALIGNMENT AND STATIONS | DETAIL 10 (N) | THERMOPLASTIC TRAFFIC STRIPE | | | | | | | | | | | | | PAINT TRAFFIC STRIPE (2-COAT) | | | THERMOPLASTIC PAVEMENT MARKING | | | | | PAVEMENT MARKER | | | | REMOVE | | | | |
|---|---|---|---|---|---|---|---|---|---|---|---|---|---|---|---|---|---|---|---|---|---|---|---|---|---|---|---|---|---|---|---|---|
| | | | DETAIL 13 Mod 4" WHITE BROKEN (36-12) | DETAIL 14 Mod 4" WHITE BROKEN (36-12) | DETAIL 8 4" WHITE BROKEN (17-7) | DETAIL 37 (AUX) 8" WHITE BROKEN (12-3) | DETAIL C(HOV CONTINUOUS) 8" WHITE BROKEN (36-12) | DETAIL C MOD (HOV CONTINUOUS) 8" WHITE BROKEN (36-12) | DETAIL 38B 8" SOLID WHITE | DETAIL 36 8" SOLID WHITE | DETAIL 36A 8" SOLID WHITE | DETAIL 36B 8" SOLID WHITE | DETAIL 27B 4" SOLID WHITE | DETAIL 25 4" SOLID YELLOW | DETAIL 25A 4" SOLID YELLOW | DETAIL 13 Mod 4" BLACK BROKEN (36-12) | DETAIL 14 Mod 4" BLACK BROKEN (36-12) | DETAIL 37C Mod 4" BLACK BROKEN (36-12) | 12" SOLID DIAGONAL YELLOW | 12" SOLID DIAGONAL WHITE | HOV DIAMOND & LETTERS | ARROW | CROSSWALK LIMIT LINE | NON-REFLECTIVE TYPE A | RETRO-REFLECTIVE TYPE H | RETRO-REFLECTIVE TYPE G | RETRO-REFLECTIVE TYPE C | YELLOW THERMOPLASTIC TRAFFIC STRIPE (HAZARDOUS WASTE) | THERMOPLASTIC TRAFFIC STRIP (WHITE) | YELLOW THERMOPLASTIC PAVEMENT MARKING (HAZARDOUS WASTE) | THERMOPLASTIC PAVEMENT MARKING | PAVEMENT MARKER |
| | | LF | LF | LF | LF | LF | LF | LF | LF | LF | LF | LF | LF | LF | LF | LF | LF | LF | SQFT | SQFT | SQFT | SQFT | SQFT | EA | EA | EA | EA | LF | LF | SQFT | SQFT | EA |
| PD-49 | WB LINE "F" 517+50 TO 531+00 | | 3700 | | | | | | | | 250 | | 1400 | 1400 | | 3700 | | | | | | | | 308 | 30 | 91 | | 7000 | 2825 | | | 429 |
| | EB LINE "F" 517+50 TO 531+00 | | 2950 | | | | 1400 | | 500 | 820 | | | 1400 | 1400 | | 2950 | | | | | | | | 244 | 30 | 375 | | 7000 | 4778 | | | 649 |
| PD-50 | WB LINE "F" 517+50 TO 531+00 | | 2300 | | | | | | | | | | 1150 | 1150 | | 2300 | | | | | | | | 192 | 25 | 50 | | 1150 | 1725 | | | 267 |
| | EB LINE "F" 517+50 TO 531+00 | | 2300 | | | | | | | | | | 1150 | 1150 | | 2300 | | | | | | | | 192 | 25 | 50 | | 1150 | 1725 | | | 267 |
| PD-51 | WB LINE "F" 543+00 TO 557+00 | | 3600 | | | | | | | 760 | | | 1400 | 620 | | 3600 | | | | | | | | 300 | 14 | 112 | | 620 | 3820 | | | 426 |
| | EB LINE "G" 543+00 TO 544+27 | | 254 | | | | | | | | 254 | | 254 | 254 | | | | | | | | | | 24 | 6 | 24 | | 254 | 5337 | | | 54 |
| PD-52 | WB LINE "G" 84+00 TO 98+00 | | 5600 | | | | | | | | | | 1400 | | | 5600 | | | | | | | | 480 | | 120 | | | 2800 | | | 600 |
| PD-53 | WB LINE "G" 98+00 TO 108+50 | | 4200 | | 400 | | | | | | 200 | | 1050 | | | 4200 | | | | | | | | 352 | | 101 | | | 2500 | | | 453 |
| PD-54 | WB LINE "G" 108+50 TO 114+77 | | 3800 | | | | | | | | | | 950 | | | 3800 | | | | | | | | 320 | | 84 | | | 1900 | | | 404 |
| PD-55 | EB LINE "MAG" 115+30 TO 119+98.77 | | | | | | | | | | | | 469 | | 469 | | | | | | | | | | 20 | | | | | | | 20 |
| SUB TOTAL | | | 28704 | | 400 | | 1400 | | 500 | 1580 | 704 | | 10623 | 5974 | 469 | 28450 | | | | | | | | 2412 | 150 | 1007 | | 17174 | 27410 | | | 3569 |
| SHEET TOTAL | | | | | 400 | | 1400 | | 2784 | | | | 17066 | | | 28450 | | | | | | | | 2412 | 1157 | | | 17174 | 27410 | | | 3569 |

(N) : NOT A SEPARATE PAY ITEM, FOR INFORMATION ONLY

## PAVEMENT DELINEATION QUANTITIES

PDQ-10

| REVISED BY | TRANG L. |
|---|---|
| DATE REVISED | 04/11/11 |
| RICHARD DANG | |
| TRANG LUONG | |
| CALCULATED-DESIGNED BY | |
| CHECKED BY | |
| FUNCTIONAL SUPERVISOR | SON NGUYEN |

STATE OF CALIFORNIA - DEPARTMENT OF TRANSPORTATION
Caltrans TRAFFIC DESIGN

LAST REVISION 00-00-00 | DATE PLOTTED => 21-JUN-2011 | TIME PLOTTED => 08:23

| Dist | COUNTY | ROUTE | POST MILES TOTAL PROJECT | SHEET No. | TOTAL SHEETS |
|---|---|---|---|---|---|
| 12 | Ora | 91 | R0.0/R10.1 | 216 | 294 |

REGISTERED CIVIL ENGINEER 04/28/11 DATE

6-20-11
PLANS APPROVAL DATE

REGISTERED PROFESSIONAL ENGINEER TRANG LUONG No. C64430 Exp. 06/30/11 CIVIL STATE OF CALIFORNIA

*THE STATE OF CALIFORNIA OR ITS OFFICERS OR AGENTS SHALL NOT BE RESPONSIBLE FOR THE ACCURACY OR COMPLETENESS OF SCANNED COPIES OF THIS PLAN SHEET.*

# PAVEMENT DELINEATION QUANTITIES

| | | THERMOPLASTIC TRAFFIC STRIPE | | | | | | | | | | | | PAINT TRAFFIC STRIPE (2-COAT) | | | THERMOPLASTIC PAVEMENT MARKING | | | | | PAVEMENT MARKER | | | | REMOVE | | | | |
|---|---|---|---|---|---|---|---|---|---|---|---|---|---|---|---|---|---|---|---|---|---|---|---|---|---|---|---|---|---|---|
| | DETAIL 10 (N) | DETAIL 13 Mod 4" WHITE BROKEN (36-12) | DETAIL 14 Mod 4" WHITE BROKEN (36-12) | DETAIL 8 4" WHITE BROKEN (17-7) | DETAIL 37 (AUX) 8" WHITE BROKEN (12-3) | DETAIL C(HOV CONTINUOUS) 8" WHITE BROKEN (36-12) | DETAIL 38B 8" SOLID WHITE | DETAIL 36 8" SOLID WHITE | DETAIL 36A 8" SOLID WHITE | DETAIL 36B 8" SOLID WHITE | DETAIL 27B 4" SOLID WHITE | DETAIL 25 4" SOLID YELLOW | DETAIL 25A 4" SOLID YELLOW | DETAIL 13 Mod 4" BLACK BROKEN (36-12) | DETAIL 14 Mod 4" BLACK BROKEN (36-12) | DETAIL 37C Mod 4" BLACK BROKEN (36-12) | 12" SOLID DIAGONAL YELLOW | 12" SOLID DIAGONAL WHITE | HOV DIAMOND & LETTERS | ARROW | CROSSWALK LIMIT LINE | NON-REFLECTIVE TYPE A | RETRO-REFLECTIVE TYPE H | RETRO-REFLECTIVE TYPE G | RETRO-REFLECTIVE TYPE C | YELLOW THERMOPLASTIC TRAFFIC STRIPE (HAZARDOUS WASTE) | THERMOPLASTIC TRAFFIC STRIP (WHITE) | YELLOW THERMOPLASTIC PAVEMENT MARKING (HAZARDOUS WASTE) | THERMOPLASTIC PAVEMENT MARKING | PAVEMENT MARKER |
| | LF | LF | LF | LF | LF | LF | LF | LF | LF | LF | LF | LF | LF | LF | LF | LF | SQFT | SQFT | SQFT | SQFT | SQFT | EA | EA | EA | EA | LF | LF | SQFT | SQFT | EA |
| PDQ-1 TOTAL | 515 | 50376 | | 585 | | 16600 | 1778 | | | | 37824 | | | 83576 | | | 1251 | | | | | 4240 | 1638 | | | 64000 | 23661 | | 1008 | 5694 |
| PDQ-2 TOTAL | 600 | 31455 | | 304 | 902 | 9900 | 3815 | | | | 25341 | | | 51255 | | | 2256 | | | | | 2603 | 1517 | | | 40400 | 20921 | | 1888 | 4120 |
| PDQ-3 TOTAL | 700 | 38897 | | 1003 | 816 | 9925 | 3874 | | | | 40804 | | | 50376 | | | 2740 | | | | | 3234 | 4170 | | | 73150 | 31550 | | 2184 | 10444 |
| PDQ-4 TOTAL | 914 | 34136 | | 460 | 5209 | 12800 | 5368 | | | | 28956 | | | 58776 | | | 1343 | | | | | 5822 | 6507 | | | 60400 | 31616 | 70 | 1273 | 12329 |
| PDQ-5 TOTAL | 300 | 35802 | | 262 | 2989 | 14400 | 2980 | | | | 31893 | | | 64602 | | | 1504 | | | | | 3000 | 4158 | | | 58350 | 24992 | | 1420 | 7158 |
| PDQ-6 TOTAL | 1055 | 40708 | | 450 | 2370 | 17200 | 4946 | | | | 18535 | | | 75396 | | | 1611 | | | | | 3560 | 4815 | | | 70900 | 38381 | | 1526 | 8375 |
| PDQ-7 TOTAL | 88 | 35249 | | 244 | 2400 | 15000 | 6353 | | | | 34439 | | | 56649 | | | 896 | | | | | 2140 | 5144 | | | 42800 | 13319 | | 336 | 7192 |
| PDQ-8 TOTAL | 760 | 29553 | | 250 | 4675 | 11900 | 5201 | | | | 41754 | | | 53353 | | | 1116 | | | | | 2555 | 4110 | | | 58800 | 37557 | | 84 | 6289 |
| PDQ-9 TOTAL | | 42298 | | 400 | | 9900 | 2442 | | | | 28540 | | | 62098 | | | 275 | | | | | 3184 | 2998 | | | 65000 | 28031 | | 225 | 6182 |
| PDQ-10 TOTAL | | | | 400 | | 1400 | 2784 | | | | 17066 | | | 28450 | | | | | | | | 2412 | 1157 | | | 17174 | 27410 | | | 3569 |
| GRAND TOTAL | 4932 | 338474 | | 4358 | 19361 | 119025 | 39541 | | | | 305152 | | | 584531 | | | 12992 | | | | | 32750 | 36214 | | | 550974 | 277438 | 70 | 9944 | 71352 |

(N) = NOT A SEPARATE PAY ITEM, FOR INFORMATION ONLY

STATE OF CALIFORNIA - DEPARTMENT OF TRANSPORTATION
Caltrans TRAFFIC DESIGN

FUNCTIONAL SUPERVISOR: SON NGUYEN
CALCULATED-DESIGNED BY: RICHARD DANG
CHECKED BY: TRANG LUONG
REVISED BY: TRANG L.
DATE REVISED: 04/11/11

PAVEMENT DELINEATION QUANTITIES

PDQ-11

LAST REVISION 00-00-00 | DATE PLOTTED => 21-JUN-2011 | TIME PLOTTED => 08:23

| Dist | COUNTY | ROUTE | POST MILES TOTAL PROJECT | SHEET No. | TOTAL SHEETS |
|---|---|---|---|---|---|
| 12 | Ora | 91 | R0.0/R10.1 | 217 | 294 |

REGISTERED CIVIL ENGINEER 04/28/11 DATE

6-20-11
PLANS APPROVAL DATE

REGISTERED PROFESSIONAL ENGINEER LAWRENCE LE No. C 57405 Exp. 12/31/11 CIVIL STATE OF CALIFORNIA

*THE STATE OF CALIFORNIA OR ITS OFFICERS OR AGENTS SHALL NOT BE RESPONSIBLE FOR THE ACCURACY OR COMPLETENESS OF SCANNED COPIES OF THIS PLAN SHEET.*

**Sign 13 - G86-8(CA)**

2.3" Radius, 0.9" Border, White on Green;
Rectangle Black;
[ARTESIA] C 85} spacing;
[BLOOMFIELD] C 85} spacing; [NEXT] E;
[EXIT] E;

**Sign 330 - G85-8(CA) Mod**

2.3" Radius, 1.0" Border, White on Green;
Rectangle Black;
[CARMENITA] C 85} spacing;
[RD] C 85} spacing; [ARTESIA] C;
[BLVD] C; Arrow Custom - 8.0" 45{;

**Sign 330 - G86-8(CA)**

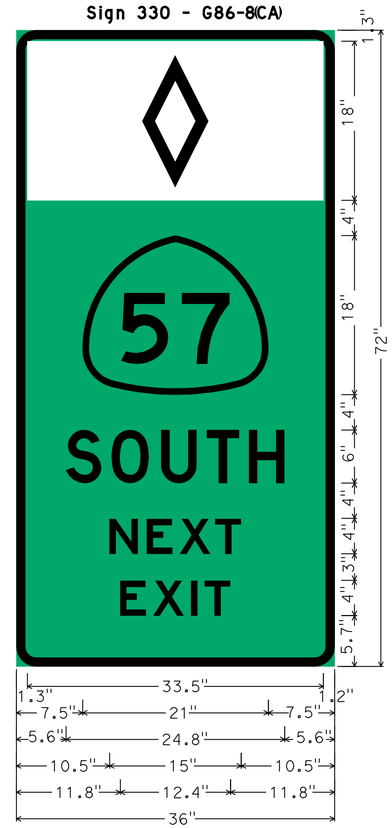


2.3" Radius, 1.0" Border, White on Green;
Rectangle Black;
[SOUTH] D; [NEXT] E; [EXIT] E;

**Sign 340 - G85-8(CA) Mod**

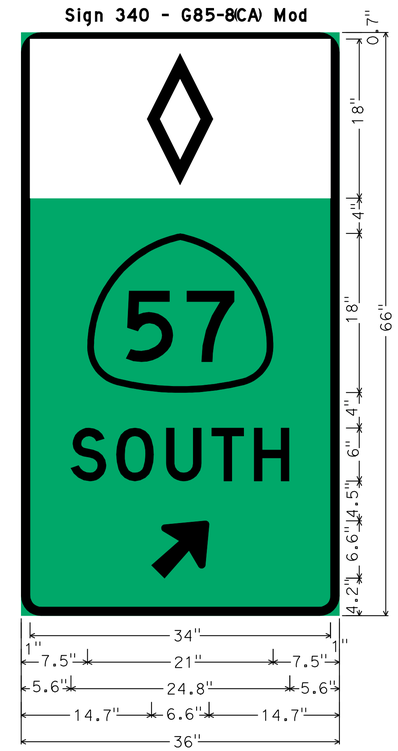


2.3" Radius, 1.0" Border, White on Green;
Rectangle Black;
[SOUTH] D; Arrow Custom - 8.0" 45{;

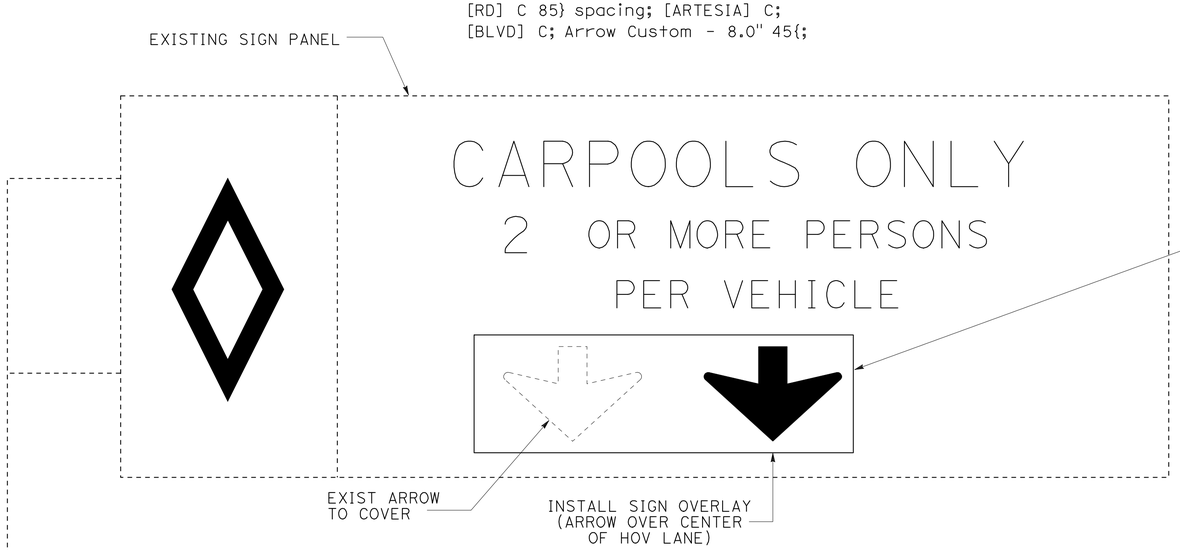


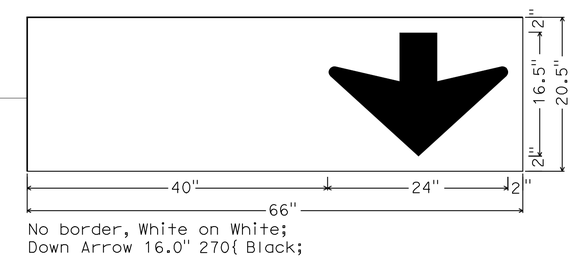


No border, White on White;
Down Arrow 16.0" 270{ Black;

DETAIIL A

# SIGN DETAILS

SD-1

STATE OF CALIFORNIA - DEPARTMENT OF TRANSPORTATION
Caltrans DESIGN BRANCH I

FUNCTIONAL SUPERVISOR: SON NGUYEN
CALCULATED-DESIGNED BY: LAWRENCE LE
CHECKED BY
REVISED BY
DATE REVISED: 04-29-11

LAST REVISION 04-29-11 | DATE PLOTTED => 19-OCT-2011 | TIME PLOTTED => 08:07

BORDER LAST REVISED 7/2/2010 | USERNAME => s121614 | DGN FILE => 1200020045ob001.dgn | RELATIVE BORDER SCALE IS IN INCHES 0 1 2 3 | UNIT 2993 | PROJECT NUMBER & PHASE 12000200451

| Dist | COUNTY | ROUTE | POST MILES TOTAL PROJECT | SHEET No. | TOTAL SHEETS |
|---|---|---|---|---|---|
| 12 | Ora | 91 | R0.0/R10.1 | 218 | 294 |

Lawrencele 04/28/11
REGISTERED CIVIL ENGINEER DATE

6-20-11
PLANS APPROVAL DATE

REGISTERED PROFESSIONAL ENGINEER
LAWRENCE LE
No. C 57405
Exp. 12/31/11
CIVIL
STATE OF CALIFORNIA

*THE STATE OF CALIFORNIA OR ITS OFFICERS OR AGENTS SHALL NOT BE RESPONSIBLE FOR THE ACCURACY OR COMPLETENESS OF SCANNED COPIES OF THIS PLAN SHEET.*

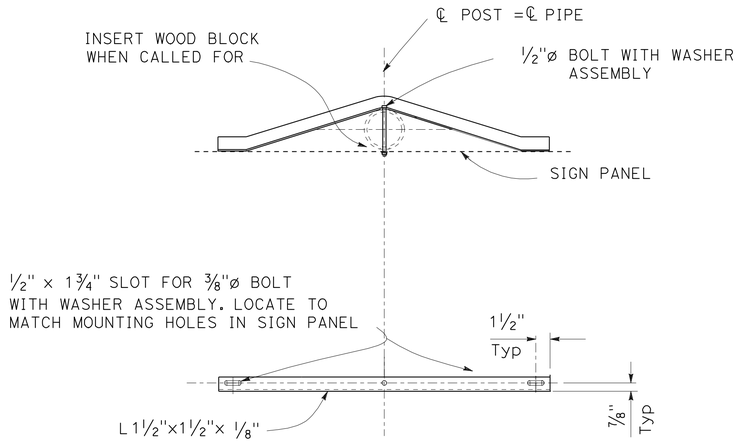


**BACK BRACE DETAILS**

NOTES:

1. FOR DETAILS NOT SHOWN SEE STANDARD PLANS.
2. WASHER ASSEMBLY CONSIST OF TWO FLAT WASHER, NUT, FIBER WASHER AND JAM NUT.

**SIGN TABLE**

| WIDTH = W | BACK BRACE= X |
|---|---|
| 30" | 12" |
| 36" | 18" |

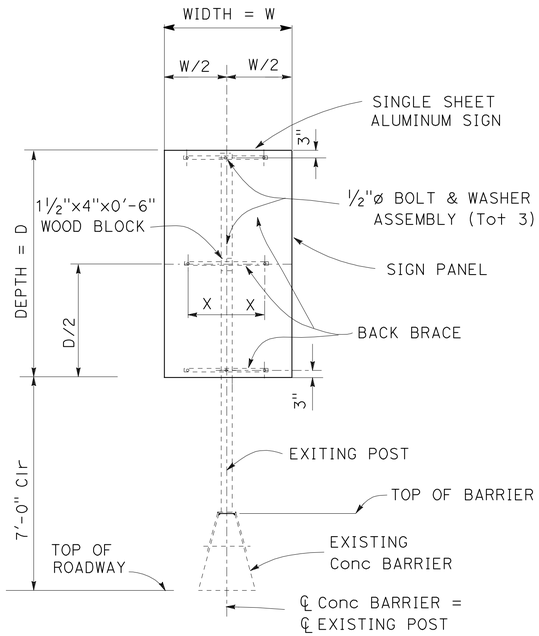


**SIGN PANEL ON EXISTING POST**

**DETAIL B**

ISF R87-1(CA)

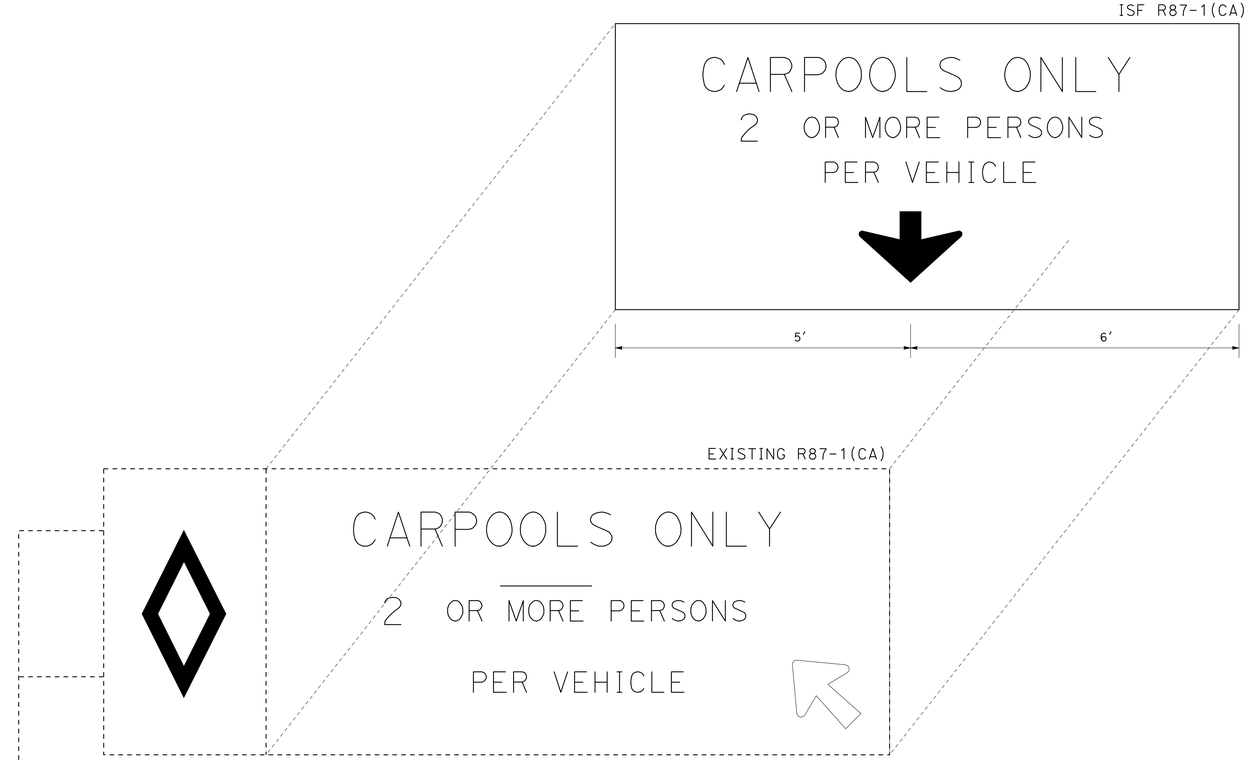


**INSTALL SIGN PANEL ON EXISTING FRAME**

**DETAIL A**

# SIGN DETAILS

**SD-2**

STATE OF CALIFORNIA - DEPARTMENT OF TRANSPORTATION
Caltrans® DESIGN BRANCH I

FUNCTIONAL SUPERVISOR: SON NGUYEN
CALCULATED-DESIGNED BY: LAWRENCE LE
CHECKED BY
REVISED BY
DATE REVISED: 02-07-11

LAST REVISION 02-07-11
DATE PLOTTED => 21-JUN-2011
TIME PLOTTED => 08:23

| Dist | COUNTY | ROUTE | POST MILES TOTAL PROJECT | SHEET No. | TOTAL SHEETS |
|---|---|---|---|---|---|
| 12 | Ora | 91 | R0.0/R10.1 | 219 | 294 |

REGISTERED CIVIL ENGINEER 06/03/11 DATE

6-20-11
PLANS APPROVAL DATE

REGISTERED PROFESSIONAL ENGINEER
LAWRENCE LE
No. C 57405
Exp. 12/31/11
CIVIL
STATE OF CALIFORNIA

*THE STATE OF CALIFORNIA OR ITS OFFICERS OR AGENTS SHALL NOT BE RESPONSIBLE FOR THE ACCURACY OR COMPLETENESS OF SCANNED COPIES OF THIS PLAN SHEET.*

# SIGN QUANTITIES

| SHEET No. | SIGN No. | SIGN CODE | PANEL SIZE | REMOVE ROADSIDE SIGN (METAL POST) | REMOVE ROADSIDE SIGN PANEL | REMOVE ROADSIDE SIGN (STRAP & SADDLE BRACKET METHOD) | REMOVE ROADSIDE SIGN (WOOD POST) | INSTALL ROADSIDE SIGN PANEL ON EXISTING POST | INSTALL SIGN (STRAP & SADDLE BRACKET METHOD) | INSTALL SIGN PANEL ON EXISTING FRAME | INSTALL SIGN OVERLAY | POST SIZE & LENGTH (4" x 6")(N) | ROADSIDE SIGN (ONE POST) | ROADSIDE SIGN (TWO POST) | REMARKS |
|---|---|---|---|---|---|---|---|---|---|---|---|---|---|---|---|
| | | | (IN x IN) | EA | EA | EA | EA | EA | EA | SQFT | SQFT | FT | EA | EA | |
| PD-1 | 10 | G86-9(CA) | | 1 | | | | | | | | | | | |
| | | R93-2(CA) | | | | | | | | | | | | | |
| | 11 | G86-8(CA) | | 1 | | | | | | | | | | | |
| | 12 | G86-8(CA) | 36 x 60 | | | | | | 1 | | | | | | |
| PD-2 | 20 | DETAIL A | 66 x 20 | | | | | | | | 9.2 | | | | |
| PD-3 | 30 | G85-8(CA) | 36 x 72 | | | | | | 1 | | | | | | |
| | 31 | DETAIL A | 66 x 20 | | | | | | | | 9.2 | | | | |
| PD-4 | 40 | G86-2(CA) | | | 1 | | | | | | | | | | |
| PD-5 | 50 | R93-2(CA) | | 1 | | | | | | | | | | | |
| | | R93A(CA) | | | | | | | | | | | | | |
| | | G86-9(CA) Mod | | | | | | | | | | | | | |
| PD-6 | 60 | G86-8(CA) | | 1 | | | | | | | | | | | |
| PD-7 | 70 | DETAIL A | 66 x 20 | | | | | | | | 9.2 | | | | |
| | | G85-7(CA) | | | | 1 | | | | | | | | | |
| | 71 | | | 1 | | | | | | | | | | | |
| PD-9 | 90 | G86-9(CA) | | 1 | | | | | | | | | | | |
| | 91 | G86-10(CA) | | 1 | | | | | | | | | | | |
| | | R93-2(CA) | | | | | | | | | | | | | |
| PD-11 | 110 | R93A(CA) | | | 1 | | | | | | | | | | |
| | 111 | R93A(CA) | | 1 | | | | | | | | | | | |
| PD-13 | 130 | R86-2(CA) | | | | 1 | | | | | | | | | |
| | 131 | R86-2(CA) | 30 x 60 | | | | | | 1 | | | | | | |
| PD-19 | 190 | DETAIL A | 66 x 20 | | | | | | | | 9.2 | | | | |
| | | G85-7(CA) | | | | 1 | | | | | | | | | |
| PD-20 | 200 | R86-2(CA) | | | | 1 | | | | | | | | | |
| | 201 | DETAIL A | 66 x 20 | | | | | | | | 9.2 | | | | |
| | | G85-8(CA) | | | | 1 | | | | | | | | | |
| | | R93-2(CA) | 30 x 72 | | | | | | 1 | | | | | | |
| | 202 | R61-27(CA)(2) | 72 x 45 | | | | | | | | | 34 | | 2 | |
| | 203 | R61-27(CA)(2) | 72 x 45 | | | | | | | | | 34 | | 2 | |
| PD-21 | 210 | R93-2(CA) | | 1 | | | | | | | | | | | |
| | | G86-9(CA) | | | | | | | | | | | | | |
| PD-22 | 220 | R93-2(CA) | | | 1 | | | | | | | | | | |
| PD-23 | 230 | DETAIL A | 66 x 20 | | | | | | | | 9.2 | | | | |
| | | G85-7(CA) | | | | 1 | | | | | | | | | |
| | 231 | S32(CA) | 36 x 30 | | | | | | | | | 16 | 1 | | |
| | | S32-1(CA) | 15 x 18 | | | | | | | | | | | | |
| | 232 | S32(CA) | | | | | 1 | | | | | | | | |
| | | S32-1(CA) | | | | | | | | | | | | | |
| | 233 | R61-27(CA)(2) | 72 x 45 | | | | | | | | | 34 | | 2 | |
| | 234 | R86-2(CA) | | | | 1 | | | | | | | | | |
| | | R86-2(CA) | 30 x 60 | | | | | | 1 | | | | | | |
| SUB-TOTAL (SQ-1) | | | | 9 | 3 | 7 | 1 | | 5 | | 55.2 | | 1 | 6 | |

(N) - NOT A SEPARATE PAY ITEM, FOR INFORMATION ONLY

STATE OF CALIFORNIA - DEPARTMENT OF TRANSPORTATION
Caltrans® DESIGN BRANCH I

FUNCTIONAL SUPERVISOR: SON NGUYEN
CALCULATED-DESIGNED BY: LAWRENCE LE
CHECKED BY
REVISED BY
DATE REVISED: 04-28-11

## SIGN QUANTITIES
## SQ-1

LAST REVISION 04-28-11 | DATE PLOTTED => 21-JUN-2011 | TIME PLOTTED => 08:23

| Dist | COUNTY | ROUTE | POST MILES TOTAL PROJECT | SHEET No. | TOTAL SHEETS |
|---|---|---|---|---|---|
| 12 | Ora | 91 | R0.0/R10.1 | 220 | 294 |

REGISTERED CIVIL ENGINEER DATE 06/03/11

PLANS APPROVAL DATE 6-20-11

REGISTERED PROFESSIONAL ENGINEER LAWRENCE LE No. C 57405 Exp. 12/31/11 CIVIL STATE OF CALIFORNIA

*THE STATE OF CALIFORNIA OR ITS OFFICERS OR AGENTS SHALL NOT BE RESPONSIBLE FOR THE ACCURACY OR COMPLETENESS OF SCANNED COPIES OF THIS PLAN SHEET.*

# SIGN QUANTITIES

| SHEET No. | SIGN No. | SIGN CODE | PANEL SIZE (IN x IN) | REMOVE ROADSIDE SIGN (METAL POST) EA | REMOVE ROADSIDE SIGN PANEL EA | REMOVE ROADSIDE SIGN (STRAP & SADDLE BRACKET METHOD) EA | REMOVE ROADSIDE SIGN (WOOD POST) EA | INSTALL ROADSIDE SIGN PANEL ON EXISTING POST EA | INSTALL SIGN (STRAP & SADDLE BRACKET METHOD) EA | INSTALL SIGN PANEL ON EXISTING FRAME SQFT | INSTALL SIGN OVERLAY SQFT | POST SIZE & LENGTH (4" x 6")(N) FT | ROADSIDE SIGN (ONE POST) EA | ROADSIDE SIGN (TWO POST) EA | REMARKS |
|---|---|---|---|---|---|---|---|---|---|---|---|---|---|---|---|
| PD-24 | 240 | R86-2(CA) | | | | 1 | | | | | | | | | |
| | | R86-2(CA) | 30 x 60 | | | | | | 1 | | | | | | |
| | 241 | R93-2(CA) | | 1 | | | | | | | | | | | |
| | | R93-2(CA) | | | | | | | | | | | | | |
| | 242 | DETAIL A | 66 x 20 | | | | | | | | 9.2 | | | | |
| | | G85-8(CA) | | | | 1 | | | | | | | | | |
| PD-25 | 250 | G86-9 Mod(CA) | | 1 | | | | | | | | | | | |
| | | G86-9(CA) | | | | | | | | | | | | | |
| | 251 | R86-2(CA) | | 1 | | | | | | | | | | | |
| | | R93-2(CA) | | | | | | | | | | | | | |
| PD-26 | 260 | DETAIL A | 66 x 20 | | | | | | | | 9.2 | | | | |
| | | G85-7(CA) | | | | 1 | | | | | | | | | |
| | 261 | R86-2(CA) | | | | 1 | | | | | | | | | |
| | | R86-2(CA) | 30 x 60 | | | | | | 1 | | | | | | |
| PD-27 | 270 | R86-2(CA) | 30 x60 | | | | | 1 | | | | | | | Remove existing sign panel (N) |
| | | R86-2(CA) | | | | | | | | | | | | | |
| | 271 | G85-7(CA) | | 1 | | | | | | | | | | | |
| PD-28 | 280 | R93-2(CA) | | 1 | | | | | | | | | | | |
| | 281 | G86-8(CA) | | 1 | | | | | | | | | | | |
| PD-29 | 290 | G86-9(CA) | | 1 | | | | | | | | | | | |
| | | R93-2(CA) | | | | | | | | | | | | | |
| PD-30 | 300 | G85-8(CA) | | | | 1 | | | | | | | | | |
| | 301 | R86-2(CA) | | | | 1 | | | | | | | | | |
| | | R86-2(CA) | 30 x 60 | | | | | | 1 | | | | | | |
| PD-31 | 310 | R86-2(CA) | | | | 1 | | | | | | | | | |
| | | R86-2(CA) | | | | | | | 1 | | | | | | |
| | 311 | DETAIL A | 66 x 20 | | | | | | | | 9.2 | | | | |
| | | G85-7(CA) | | | | 1 | | | | | | | | | |
| PD-32 | 320 | R93-2(CA) | | 1 | | | | | | | | | | | |
| | | G86-8(CA) | | | | | | | | | | | | | |
| PD-33 | 330 | G86-8(CA) | | | | 1 | | | | | | | | | |
| | | G86-8(CA) | 36 x 72 | | | | | | 1 | | | | | | |
| | 331 | R86-2(CA) | | | | 1 | | | | | | | | | |
| | | R86-2(CA) | 30 x 60 | | | | | | 1 | | | | | | |
| PD-34 | 340 | G85-7(CA) | | | | 1 | | | | | | | | | |
| | | G85-7(CA) | 36 x 66 | | | | | | 1 | | | | | | |
| PD-35 | 350 | R93A(CA) | | | | 1 | | | | | | | | | |
| | 351 | R93A(CA) | | | | 1 | | | | | | | | | |
| PD-36 | 360 | G86-9(CA) | | 1 | | | | | | | | | | | |
| PD-37 | 370 | DETAIL A | 66 x 20 | | | | | | | | 9.2 | | | | |
| | | G85-8(CA) | | | | 1 | | | | | | | | | |
| | | R93A(CA)(2) | | | | | | | 2 | | | | | | |
| PD-38 | 380 | R93-2(CA) | | 1 | | | | | | | | | | | |
| SUB-TOTAL (SQ-2) | | | | 10 | | 14 | | 1 | 9 | | 36.80 | | | | |

(N) - NOT A SEPARATE PAY ITEM, FOR INFORMATION ONLY

## SIGN QUANTITIES

## SQ-2

STATE OF CALIFORNIA - DEPARTMENT OF TRANSPORTATION

Caltrans® DESIGN BRANCH I

FUNCTIONAL SUPERVISOR: SON NGUYEN

CALCULATED-DESIGNED BY: LAWRENCE LE

CHECKED BY

REVISED BY

DATE REVISED: 04-28-11

LAST REVISION 04-28-11 | DATE PLOTTED => 21-JUN-2011 | TIME PLOTTED => 08:23

| Dist | COUNTY | ROUTE | POST MILES TOTAL PROJECT | SHEET No. | TOTAL SHEETS |
|---|---|---|---|---|---|
| 12 | Ora | 91 | R0.0/R10.1 | 221 | 294 |

REGISTERED CIVIL ENGINEER 06/03/11 DATE

6-20-11
PLANS APPROVAL DATE

REGISTERED PROFESSIONAL ENGINEER LAWRENCE LE No. C 57405 Exp. 12/31/11 CIVIL STATE OF CALIFORNIA

*THE STATE OF CALIFORNIA OR ITS OFFICERS OR AGENTS SHALL NOT BE RESPONSIBLE FOR THE ACCURACY OR COMPLETENESS OF SCANNED COPIES OF THIS PLAN SHEET.*

# SIGN QUANTITIES

| SHEET No. | SIGN No. | SIGN CODE | PANEL SIZE | REMOVE ROADSIDE SIGN (METAL POST) | REMOVE ROADSIDE SIGN PANEL | REMOVE ROADSIDE SIGN (STRAP & SADDLE BRACKET METHOD) | REMOVE ROADSIDE SIGN (WOOD POST) | INSTALL ROADSIDE SIGN PANEL ON EXISTING POST | INSTALL SIGN (STRAP & SADDLE BRACKET METHOD) | INSTALL SIGN PANEL ON EXISTING FRAME | INSTALL SIGN OVERLAY | POST SIZE & LENGTH (4" x 6")(N) | ROADSIDE SIGN (ONE POST) | ROADSIDE SIGN (TWO POST) | REMARKS |
|---|---|---|---|---|---|---|---|---|---|---|---|---|---|---|---|
| | | | (IN x IN) | EA | EA | EA | EA | EA | EA | SQFT | SQFT | FT | EA | EA | |
| PD-40 | 400 | R93-2(CA) | | | | 1 | | | | | | | | | |
| | | R93-2(CA) | 30 x 72 | | | | | | 1 | | | | | | |
| PD-41 | 410 | R86-2(CA) | | 1 | | | | | | | | | | | |
| PD-42 | 420 | NO PANEL | | 1 | | | | | | | | | | | |
| PD-43 | 430 | R6-1(4) | | | | | | 4 | | | | | | | |
| PD-44 | 440 | R84-2(CA) Mod | 30 x 60 | | | | | | 1 | | | | | | YELLOW BACKGROUND |
| | 441 | R84-2(CA) Mod | | | | 1 | | | | | | | | | |
| | 442 | RM R86-2(CA) | | | | 1 | | | | | | | | | |
| PD-45 | 450 | R86-2(CA) | | | 1 | | | | | | | | | | |
| | 451 | R93-2(CA) | | | | 1 | | | | | | | | | |
| PD-46 | 460 | R84-1(CA) Mod | | | | 1 | | | | | | | | | YELLOW BACKGROUND |
| | | R84-1(CA) Mod | 30 x 54 | | | | | | 1 | | | | | | |
| | 461 | R93-2(CA) | | | | 1 | | | | | | | | | |
| | | R93A(CA) | | | | 1 | | | | | | | | | |
| | | R93-2(CA) | 30 x 72 | | | | | | 1 | | | | | | |
| | 462 | R87-1(CA) | 168 x 70 | | | | | | | 82 | | | | | |
| | | SR50-2(CA) | | | | 1 | | | | | | | | | |
| | | SR50-2(CA) | 30 x 66 | | | | | | 1 | | | | | | |
| SUB-TOTAL (SQ-3) | | | | 2 | 1 | 8 | | 4 | 5 | 82 | | | | | |
| SUB-TOTAL (SQ-2) | | | | 10 | | 14 | | 1 | 9 | | 36.8 | | | | |
| SUB-TOTAL (SQ-1) | | | | 9 | 3 | 7 | 1 | | 5 | | 55.2 | | 1 | 6 | |
| TOTAL (SQ1, SQ2, & SQ3) | | | | 21 | 4 | 29 | 1 | 5 | 19 | 82 | 92 | | 1 | 6 | |

(N) - NOT A SEPARATE PAY ITEM, FOR INFORMATION ONLY

REVISED BY | DATE REVISED: 04-28-11

LAWRENCE LE

CALCULATED-DESIGNED BY | CHECKED BY

FUNCTIONAL SUPERVISOR: SON NGUYEN

STATE OF CALIFORNIA - DEPARTMENT OF TRANSPORTATION
Caltrans® DESIGN BRANCH I

## SIGN QUANTITIES

## SQ-3

LAST REVISION 04-28-11 | DATE PLOTTED => 21-JUN-2011 | TIME PLOTTED => 08:23

| Dist | COUNTY | ROUTE | POST MILES TOTAL PROJECT | SHEET No. | TOTAL SHEETS |
|---|---|---|---|---|---|
| 12 | Ora | 91 | R0.0/R10.1 | 222 | 294 |

REGISTERED CIVIL ENGINEER 06/03/11 DATE

6-20-11
PLANS APPROVAL DATE

REGISTERED PROFESSIONAL ENGINEER LAWRENCE LE No. C 57405 Exp. 12/31/11 CIVIL STATE OF CALIFORNIA

*THE STATE OF CALIFORNIA OR ITS OFFICERS OR AGENTS SHALL NOT BE RESPONSIBLE FOR THE ACCURACY OR COMPLETENESS OF SCANNED COPIES OF THIS PLAN SHEET.*

# MATERIAL SUMMARY (CONTRACTOR FURNISHED SIGNS)

| SHEET No. | SIGN No. | SIGN CODE | PANEL SIZE | SINGLE FACED | BACKGROUND | | LEGENDS | | PROTECTIVE FILM | FURNISH SINGLE-SHEET ALUMINUM | | | FURNISH LAMINATED PANEL SIGN | REMARKS |
|---|---|---|---|---|---|---|---|---|---|---|---|---|---|---|
| | | | | | | | | | | ROADSIDE SIGN PANEL | OVERHEAD SIGN OVERLAY | ROADSIDE SIGN PANEL | | |
| | | | | | SHEETING COLOR | RETROREFLECTIVE ASTM TYPE | SHEETING COLOR | RETROREFLECTIVE ASTM TYPE | STANDARD | 0.063" (UNFRAMED) | 0.063" (UNFRAMED) | 0.063" (FRAMED) | 1" (TYPE A) | |
| | | | | | | | | | | SQFT | SQFT | SQFT | SQFT | |
| PD-1 | 12 | G86-8(CA) | 36 x 60 | × | B/G | Non/III | W | III | X | 15 | | | | |
| PD-2 | 20 | DETAIL A | 66 x 20 | × | W | III | B | Non | X | | 9.2 | | | |
| PD-3 | 30 | G85-8(CA) | 36 x 72 | × | B/G | Non/III | W | III | X | 18 | | | | |
| | 31 | DETAIL A | 66 x 20 | × | W | III | B | Non | X | | 9.2 | | | |
| PD-7 | 70 | DETAIL A | 66 x 20 | × | W | III | B | Non | X | | 9.2 | | | |
| PD-13 | 131 | R86-2(CA) | 30 x 60 | × | B/W | Non/III | W/B | III/Non | X | 12.5 | | | | |
| PD-19 | 190 | DETAIL A | 66 x 20 | × | W | III | B | Non | X | | 9.2 | | | |
| PD-20 | 201 | DETAIL A | 66 x 20 | × | W | III | B | Non | X | | 9.2 | | | |
| | | R93-2(CA) | 30 x 72 | × | B/G | Non/III | W/B | III/Non | X | 15 | | | | |
| | 202 | R61-27(CA)(2) | 72 x 45 | × | W | III | B | Non | X | | | 22.5 | | |
| | 203 | R61-27(CA)(2) | 72 x 45 | × | W | III | B | Non | X | | | 22.5 | | |
| PD-23 | 230 | DETAIL A | 66 x 20 | × | W | III | B | Non | X | | 9.2 | | | |
| | 231 | S32(CA) | 36 x 30 | × | PAN 327C | II | W/B | II/Non | X | 7.5 | | | | |
| | | S32-1(CA) | 15 x 18 | × | PAN 327C | II | W/B/BR/BE/BL/OR | II | X | 1.875 | | | | |
| | 233 | R61-27(CA)(2) | 72 x 45 | × | W | III | B | Non | X | | | 22.5 | | |
| | 234 | R86-2(CA) | 30 x 60 | × | B/W | Non/III | W/B | III/Non | X | 12.5 | | | | |
| PD-24 | 240 | R86-2(CA) | 30 x 60 | × | B/W | Non/III | W/B | III/Non | X | 12.5 | | | | |
| | 242 | DETAIL A | 66 x 20 | × | W | III | B | Non | X | | 9.2 | | | |
| PD-26 | 260 | DETAIL A | 66 x 20 | × | W | III | B | Non | X | | 9.2 | | | |
| | 261 | R86-2(CA) | 30 x 60 | × | B/W | Non/III | W/B | III/Non | X | 12.5 | | | | |
| PD-27 | 270 | R86-2(CA) | 30 x 60 | × | B/W | Non/III | W/B | III/Non | X | 12.5 | | | | |
| PD-30 | 301 | R86-2(CA) | 30 x 60 | × | B/W | Non/III | W/B | III/Non | X | 12.5 | | | | |
| PD-31 | 310 | R86-2(CA) | 30 x 60 | × | B/W | Non/III | W/B | III/Non | X | 12.5 | | | | |
| | 311 | DETAIL A | 66 x 20 | × | W | III | B | Non | X | | 9.2 | | | |
| PD-33 | 330 | G86-8(CA) | 36 x 72 | × | B/G | Non/III | W | III | X | 18 | | | | |
| | 331 | R86-2(CA) | 30 x 60 | × | B/W | Non/III | W/B | III/Non | X | 12.5 | | | | |
| PD-34 | 340 | G85-7(CA) | 36 x 66 | × | B/G | Non/III | W | III | X | 16.5 | | | | |
| PD-37 | 370 | DETAIL A | 66 x 20 | × | W | III | B | Non | X | | 9.2 | | | |
| | | R93-2(CA) | 36 x 15 | × | B/G | Non/III | W/B | III/Non | X | 15 | | | | |
| PD-40 | 400 | R93-2(CA) | 30 x 72 | × | B/G | Non/III | W/B | III/Non | X | 15 | | | | |
| PD 43 | 430 | R6-1(4) | 36 x 12 | × | B/W | Non/III | B | Non | X | 12 | | | | |
| PD-44 | 440 | R84-2(CA) Mod | 30 x 60 | × | B/Y | Non/III | W/B | III/Non | X | 12.5 | | | | SEE NOTE 1 |
| PD-46 | 460 | R84-1(CA) Mod | 30 x 54 | × | B/Y | Non/III | W/B | III/Non | X | 11.25 | | | | SEE NOTE 2 |
| | 461 | R93-2(CA) | 30 x 72 | × | B/W | Non/III | W/B | III/Non | X | 15 | | | | |
| | 462 | R87-1(CA) | 168 x 70 | × | B/W | Non/III | W/B | III/Non | X | | | | 82 | |
| | | SR50-2(CA) | 30 x 66 | × | B/W | Non/III | W/B | III/Non | X | 13.75 | | | | |
| SUBTOTAL | | | | | | | | | | 286.38 | 92 | 67.50 | 82 | |
| TOTAL | | | | | | | | | | 378.38 | | 67.50 | 82 | |

## LEGENDS:

B = BLACK
BR = BROWN - PANTONE 154C
BE = BEIGE - PANTONE 467C
BL = BLUE - PANTONE 165C
OR = ORANGE - PANTONE 165C
PAN 327C = PANTONE 327C
W = WHITE
G = GREEN
Y = YELLOW
Non = NON REFLECTIVE

## NOTES:

1. USE R84-2(CA) WITH YELLOW BACKGROUND
2. USE R84-1 (CA) WITH YELLOW BACKGROUND

## SIGN QUANTITIES

## SQ-4

REVISED BY | DATE REVISED 04-28-11
LAWRENCE LE
CALCULATED-DESIGNED BY | CHECKED BY
FUNCTIONAL SUPERVISOR SON NGUYEN
STATE OF CALIFORNIA - DEPARTMENT OF TRANSPORTATION
Caltrans® DESIGN BRANCH I

LAST REVISION 04-28-11 | DATE PLOTTED => 21-JUN-2011 TIME PLOTTED => 08:23

| Dist | COUNTY | ROUTE | POST MILES TOTAL PROJECT | SHEET No. | TOTAL SHEETS |
|---|---|---|---|---|---|
| 12 | Ora | 91 | R0.0/R10.1 | 223 | 294 |

REGISTERED CIVIL ENGINEER DATE 04/28/11

6-20-11
PLANS APPROVAL DATE

REGISTERED PROFESSIONAL ENGINEER JUAN DE LIRA No. C74465 Exp. 12/31/11 CIVIL STATE OF CALIFORNIA

*THE STATE OF CALIFORNIA OR ITS OFFICERS OR AGENTS SHALL NOT BE RESPONSIBLE FOR THE ACCURACY OR COMPLETENESS OF SCANNED COPIES OF THIS PLAN SHEET.*

. NOTE :

1. PARTIAL SLABS ARE CONSIDERED AS 1/3 FULL SLAB AT EITHER END.
2. (N) NOT A SEPARATE PAY ITEM, FOR INFORMATION ONLY.

# ROADWAY QUANTITIES

| SHEET No. | STATION TO STATION | NUMBER OF PARTIAL OR FULL SLABS TO BE REPAIRED OR REMOVED & REPLACED (N) | | | | REPLACE CONCRETE PAVEMENT (RAPID STRENGTH CONCRETE) | NUMBER OF SPALLED JOINT TO BE REPAIRED (N) | | REPAIR SPALLED JOINT |
|---|---|---|---|---|---|---|---|---|---|
| | | WESTBOUND LANES | | EASTBOUND LANES | | | | | |
| | | PARTIAL SLABS | FULL SLABS | PARTIAL SLABS | FULL SLABS | | WESTBOUND LANES | EASTBOUND LANES | |
| | | EA | EA | EA | EA | CY | EA | EA | SQYD |
| L-1 | "A" 218+92 TO "A" 231+00 | | 4 | 1 | 11 | 68.4 | 1 | | 1 |
| L-2 | "A" 231+00 TO "A" 245+50 | | | | | | | | |
| L-3 | "A" 245+50 TO "A" 260+00 | 1 | 2 | | | 10.4 | | 3 | 3 |
| L-4 | "A" 260+00 TO "A" 274+00 | | | | | | | | |
| L-5 | "A" 274+00 TO "A" 288+00 | | | | | | | | |
| L-6 | "A" 288+00 TO "A" 302+00 | | | | 7 | 31.2 | | | |
| L-7 | "A" 302+00 TO "A" 313+50 | | | 1 | 1 | 6.0 | | | |
| L-8 | "A" 313+50 TO "A" 322+50 | | 4 | | | 17.9 | | | |
| L-9 | "A" 322+50 TO "A" 337+00 | | | | 1 | 4.5 | | 1 | 1 |
| L-10 | "A" 337+00 TO "A" 351+50 | | 2 | | | 8.9 | | | |
| L-11 | "A" 351+50 TO "A" 366+00 | | | | | | | | |
| L-12 | "A" 366+00 TO "B" 175+30 | | | | | | | | |
| L-13 | "B" 175+30 TO "D" 190+85 | 4 | 2 | | 1 | 19.3 | | | |
| L-14 | "D" 190+85 TO "D" 203+30 | 1 | | | 1 | 6.0 | | | |
| L-15 | "D" 203+30 TO "D" 216+00 | 1 | | 1 | 3 | 16.4 | | | |
| L-16 | "D" 216+00 TO "E" 76+00 | 9 | 14 | | 24 | 183.0 | | | |
| L-17 | "E" 76+00 TO "E" 90+00 | 10 | 8 | 7 | 4 | 78.8 | | | |
| L-18 | "E" 90+00 TO "E" 104+00 | 21 | 12 | 3 | 30 | 223.1 | | | |
| L-19 | "E" 104+00 TO "E" 118+00 | 8 | 2 | 7 | 17 | 107.1 | | | |
| L-20 | "E" 118+00 TO "E" 132+50 | 3 | 8 | 2 | 15 | 110.1 | 1 | | 1 |
| L-21 | "E" 132+50 TO "E" 147+00 | | | | | | 1 | | 1 |
| L-22 | "E" 147+00 TO "E" 161+50 | 2 | 4 | | | 20.8 | | | |
| L-23 | "E" 161+50 TO "E" 176+00 | 5 | 1 | 2 | 4 | 32.7 | | 1 | 1 |
| L-24 | "E" 176+00 TO "E" 190+50 | 5 | 2 | 4 | 6 | 49.1 | | 2 | 2 |
| L-25 | "E" 190+50 TO "E" 205+00 | 3 | | 2 | 3 | 20.8 | 1 | 1 | 2 |
| L-26 | "E" 205+00 TO "E" 219+00 | 5 | 4 | 2 | 16 | 99.7 | | | |
| L-27 | "E" 219+00 TO "E" 233+00 | 6 | 5 | 6 | 17 | 116.0 | 2 | | 2 |
| L-28 | "E" 233+00 TO "E" 247+50 | | | 4 | 15 | 72.9 | | 2 | 2 |
| L-29 | "E" 247+50 TO "E" 262+00 | 30 | 26 | 4 | 18 | 246.9 | 3 | 1 | 4 |
| L-30 | "E" 262+00 TO "E" 276+50 | 33 | 42 | 5 | 4 | 261.8 | 1 | | 1 |
| L-31 | "E" 276+50 TO "E" 291+00 | 25 | 43 | 6 | 13 | 296.0 | | 2 | 2 |
| L-32 | "E" 291+00 TO "E" 305+00 | 15 | 70 | 15 | 15 | 424.0 | 1 | 2 | 3 |
| L-33 | "E" 305+00 TO "E" 319+50 | 5 | 62 | 11 | 11 | 349.5 | 1 | 1 | 2 |
| L-34 | "E" 319+50 TO "E" 333+50 | 1 | 2 | 9 | 6 | 50.6 | | | |
| L-35 | "E" 333+50 TO "E" 347+50 | | | | | | | | |
| L-36 | "E" 347+50 TO "F" 362+00 | | | | | | | | |
| L-37 | "F" 362+00 TO "F" 373+00 | 1 | 2 | | | 10.4 | | | |
| L-38 | "F" 373+00 TO "F" 387+00 | 1 | 31 | | | 139.8 | | | |
| L-39 | "F" 387+00 TO "F" 401+00 | | 17 | | | 75.9 | | | |
| L-40 | "F" 401+00 TO "F" 415+00 | | 1 | | | 4.5 | 2 | | 2 |
| L-41 | "F" 415+00 TO "F" 428+50 | 5 | 1 | | | 11.9 | 3 | | 3 |
| L-42 | "F" 428+50 TO "F" 438+50 | | 1 | | 3 | 17.9 | 1 | | 1 |
| L-43 | "F" 438+50 TO "F" 446+50 | 1 | | | 4 | 19.3 | 1 | | 1 |
| L-44 | "F" 446+50 TO "F" 461+00 | | | | | | 4 | | 4 |
| L-45 | "F" 461+00 TO "F" 475+50 | | | | | | 6 | | 6 |
| L-46 | "F" 475+50 TO "F" 489+50 | 2 | 1 | 3 | 10 | 56.5 | 6 | | 6 |
| L-47 | "F" 489+50 TO "F" 503+50 | 2 | 8 | 3 | 2 | 52.1 | 1 | | 1 |
| L-48 | "F" 503+50 TO "F" 517+50 | 6 | 1 | | 1 | 17.9 | | | |
| L-49 | "F" 517+50 TO "F" 531+20 | 2 | | | | 3.0 | 1 | | 1 |
| L-50 | "F" 531+20 TO "F" 543+00 | | | | | | | | |
| L-51 | "F" 543+00 TO "G" 84+00 | | | | | | 1 | | 1 |
| L-52 | "G" 84+00 TO "G" 98+00 | | | | | | | | |
| L-53 | "G" 98+00 TO "G" 108+50 | | | | | | | | |
| L-54 | "G" 108+50 TO "G" 114+77 | | | | | | | | |
| | TOTAL | | | | | 3340.7 | | | 54 |

# SUMMARY OF QUANTITIES

Q-1

| REVISED BY | DATE REVISED |
|---|---|
| J. DELIRA | 02-14-11 |

| CALCULATED-DESIGNED BY | CHECKED BY |
|---|---|
| JUAN DELIRA | CHRISTOPHER LE |

FUNCTIONAL SUPERVISOR: CHRISTOPHER LE

STATE OF CALIFORNIA - DEPARTMENT OF TRANSPORTATION
Caltrans® DESIGN BRANCH B

LAST REVISION 02-14-11 | DATE PLOTTED => 21-JUN-2011 | TIME PLOTTED => 08:23

| Dist | COUNTY | ROUTE | POST MILES TOTAL PROJECT | SHEET No. | TOTAL SHEETS |
|---|---|---|---|---|---|
| 12 | Ora | 91 | R0.0/R10.1 | 224 | 294 |

REGISTERED CIVIL ENGINEER 04/28/11 DATE

6-20-11
PLANS APPROVAL DATE

REGISTERED PROFESSIONAL ENGINEER JUAN DE LIRA No. C74465 Exp. 12/31/11 CIVIL STATE OF CALIFORNIA

*THE STATE OF CALIFORNIA OR ITS OFFICERS OR AGENTS SHALL NOT BE RESPONSIBLE FOR THE ACCURACY OR COMPLETENESS OF SCANNED COPIES OF THIS PLAN SHEET.*

# ROADWAY QUANTITIES

| SHEET No. | STATION TO STATION | ASPHALTIC EMULSION (FOG SEAL COAT) | | COLD PLANE AC Pvmt | | RUBBERIZED HMA (GAP GRADED) | | TACK COAT | | GRIND Exist Conc Pvmt | | GROOVE Exist Conc Pvmt | |
|---|---|---|---|---|---|---|---|---|---|---|---|---|---|
| | | WESTBOUND LANES | EASTBOUND LANES | WESTBOUND LANES | EASTBOUND LANES | WESTBOUND LANES | EASTBOUND LANES | WESTBOUND LANES | EASTBOUND LANES | WESTBOUND LANES | EASTBOUND LANES | WESTBOUND LANES | EASTBOUND LANES |
| | | TON | TON | SQYD | SQYD | TON | TON | TON | TON | SQYD | SQYD | SQYD | SQYD |
| L-1 | "A" 218+92 TO "A" 231+00 | 0.5 | 0.4 | 1591.3 | 1779.8 | 214.3 | 239.7 | 0.1 | 0.7 | 5254.9 | 4977.5 | 5254.9 | 4977.5 |
| L-2 | "A" 231+00 TO "A" 245+50 | 0.7 | 0.5 | 5030.4 | 2508.1 | 677.5 | 337.8 | 0.4 | 1.6 | 6918.4 | 6124.0 | 6918.4 | 6124.0 |
| L-3 | "A" 245+50 TO "A" 260+00 | 0.5 | 0.6 | 2901.2 | 5964.2 | 390.7 | 803.3 | 0.2 | 2.5 | 6424.0 | 7352.3 | 6424.0 | 7352.3 |
| L-4 | "A" 260+00 TO "A" 274+00 | 0.6 | 0.6 | 3673.2 | 4516.0 | 494.7 | 608.2 | 0.3 | 1.9 | 7434.1 | 7473.0 | 7434.1 | 7473.0 |
| L-5 | "A" 274+00 TO "A" 288+00 | 0.6 | 0.5 | 3846.1 | 4608.0 | 518.0 | 620.6 | 0.3 | 1.9 | 7618.7 | 7524.2 | 7618.7 | 7524.2 |
| L-6 | "A" 288+00 TO "A" 302+00 | 0.6 | 0.7 | 4113.8 | 3782.5 | 554.0 | 509.4 | 0.3 | 1.6 | 7580.5 | 7705.9 | 7580.5 | 7705.9 |
| L-7 | "A" 302+00 TO "A" 313+50 | 0.4 | 0.6 | 5403.3 | 3319.9 | 727.7 | 447.1 | 0.5 | 1.4 | 6049.8 | 6435.1 | 6049.8 | 6435.1 |
| L-8 | "A" 313+50 TO "A" 322+50 | 0.4 | 0.3 | 3862.1 | 3808.4 | 520.2 | 512.9 | 0.3 | 1.6 | 4115.4 | 4382.4 | 4115.4 | 4382.4 |
| L-9 | "A" 322+50 TO "A" 337+00 | 0.6 | 0.8 | 4602.9 | 4769.8 | 619.9 | 642.4 | 0.4 | 2.0 | 8964.7 | 9017.2 | 8964.7 | 9017.2 |
| L-10 | "A" 337+00 TO "A" 351+50 | 0.6 | 0.5 | 3951.1 | 3702.9 | 532.1 | 498.7 | 0.3 | 1.6 | 8200.0 | 8310.6 | 8200.0 | 8310.6 |
| L-11 | "A" 351+50 TO "A" 366+00 | 0.2 | 0.5 | 2299 | 4194.0 | 309.6 | 564.8 | 0.2 | 1.8 | 7108.5 | 7114.5 | 7108.5 | 7114.5 |
| L-12 | "A" 366+00 TO "B" 175+30 | 0.5 | 0.6 | 359.3 | 1120.9 | 48.4 | 151.0 | 0.1 | 0.5 | 10554.1 | 10531.4 | 10554.1 | 10531.4 |
| L-13 | "B" 175+30 TO "D" 190+85 | 0.7 | 0.7 | | | | | | | 13971.0 | 14239.1 | 13971.0 | 14239.1 |
| L-14 | "D" 190+85 TO "D" 203+30 | 0.4 | 0.6 | | 956.0 | | 128.8 | | 0.4 | 8673.1 | 8444.4 | 8673.1 | 8444.4 |
| L-15 | "D" 203+30 TO "D" 216+00 | 0.2 | 0.3 | | | | | | | 6169.5 | 3763.2 | 6169.5 | 3763.2 |
| L-16 | "D" 216+00 TO "E" 76+00 | 0.4 | 0.6 | | 576.3 | | 77.6 | | 0.2 | 8366.0 | 9650.4 | 8366.0 | 9650.4 |
| L-17 | "E" 76+00 TO "E" 90+00 | 0.4 | | | 2738.2 | | 368.8 | | 1.1 | 10974.2 | 11608.5 | 10974.2 | 11608.5 |
| L-18 | "E" 90+00 TO "E" 104+00 | 0.5 | 0.6 | 3613.1 | 4838.3 | 486.6 | 651.6 | 1.5 | 2.0 | 5620.7 | 6108.7 | 5620.7 | 6108.7 |
| L-19 | "E" 104+00 TO "E" 118+00 | 0.6 | 0.8 | 3082.4 | 7209.0 | 415.1 | 970.9 | 1.3 | 3.0 | 5550.8 | 5605.4 | 5550.8 | 5605.4 |
| L-20 | "E" 118+00 TO "E" 132+50 | 0.1 | 0.7 | 1497.4 | 5948.4 | 201.7 | 801.1 | 0.6 | 2.5 | 5283.7 | 5417.7 | 5283.7 | 5417.7 |
| L-21 | "E" 132+50 TO "E" 147+00 | | 1.0 | 4256.7 | 6501.3 | 573.3 | 875.6 | 1.8 | 2.7 | 5700.6 | 5709.34 | 5700.6 | 5709.3 |
| L-22 | "E" 147+00 TO "E" 161+50 | | 1.0 | 4001.7 | 6421.4 | 539.0 | 864.8 | 1.7 | 2.7 | 5733.4 | 5736.7 | 5733.4 | 5736.7 |
| L-23 | "E" 161+50 TO "E" 176+00 | | 0.5 | 2783.5 | 6735.2 | 374.9 | 907.1 | 1.2 | 2.8 | 5256.5 | 5316.4 | 5256.5 | 5316.4 |
| L-24 | "E" 176+00 TO "E" 190+50 | | 0.7 | 3115.5 | 6890.0 | 419.6 | 927.9 | 1.3 | 2.9 | 5757.7 | 5869.2 | 5757.7 | 5869.2 |
| L-25 | "E" 190+50 TO "E" 205+00 | | 1.1 | 3120.8 | 4824.8 | 420.3 | 649.8 | 1.3 | 2.0 | 5746.2 | 5830.4 | 5746.2 | 5830.4 |
| L-26 | "E" 205+00 TO "E" 219+00 | | 0.8 | 1778.2 | 5716.2 | 239.5 | 769.9 | 0.7 | 2.4 | 5486.0 | 5547.1 | 5486.0 | 5547.1 |
| L-27 | "E" 219+00 TO "E" 233+00 | 0.2 | 0.7 | 3626.6 | 4604.0 | 488.4 | 620.1 | 1.5 | 1.9 | 5484.1 | 5553.6 | 5484.1 | 5553.6 |
| L-28 | "E" 233+00 TO "E" 247+50 | 0.1 | 0.9 | 3764.1 | 2765.4 | 506.9 | 372.4 | 1.6 | 1.2 | 5148.2 | 5752.2 | 5148.2 | 5752.2 |
| L-29 | "E" 247+50 TO "E" 262+00 | | 0.7 | 1479 | 7947.4 | 199.2 | 1070.4 | 0.6 | 3.3 | 5779.0 | 5788.8 | 5779.0 | 5788.8 |
| L-30 | "E" 262+00 TO "E" 276+50 | | 0.6 | 1412.7 | 5656.1 | 190.3 | 761.8 | 0.6 | 2.4 | 4912.9 | 5078.8 | 4912.9 | 5078.8 |
| L-31 | "E" 276+50 TO "E" 291+00 | | 0.6 | 2606.6 | 6141.3 | 351.1 | 827.1 | 1.1 | 2.6 | 5290.0 | 5437.4 | 5290.0 | 5437.4 |
| L-32 | "E" 291+00 TO "E" 305+00 | | 0.7 | 2918.8 | 4717.5 | 393.1 | 635.4 | 1.2 | 2.0 | 5718.9 | 5697.9 | 5718.9 | 5697.9 |
| L-33 | "E" 305+00 TO "E" 319+50 | | 0.7 | 1352.9 | 2922.4 | 182.2 | 393.6 | 0.6 | 1.2 | 5661.0 | 5727.4 | 5661.0 | 5727.4 |
| L-34 | "E" 319+50 TO "E" 333+50 | | 0.6 | 4645.8 | 6725.9 | 625.7 | 905.8 | 1.9 | 2.8 | 3843.1 | 3854.8 | 3843.1 | 3854.8 |
| L-35 | "E" 333+50 TO "E" 347+50 | 0.3 | 1.1 | 12784.9 | 12739.0 | 1721.9 | 1715.7 | 5.3 | 5.3 | | | | |
| L-36 | "E" 347+50 TO "F" 362+00 | 0.7 | 0.7 | 10383.5 | 12039.5 | 1398.4 | 1621.5 | 4.3 | 5.0 | | 806.9 | | 806.9 |
| L-37 | "F" 362+00 TO "F" 373+00 | 1.2 | 1.2 | 13551.6 | 3522.4 | 426.7 | 474.4 | 1.3 | 1.5 | 5021.5 | 4933.6 | 5021.5 | 4933.6 |
| L-38 | "F" 373+00 TO "F" 387+00 | 0.6 | 0.8 | 3526.9 | 4050.4 | 475.0 | 545.5 | 1.5 | 1.7 | 6974.6 | 7172.3 | 6974.6 | 7172.3 |
| L-39 | "F" 387+00 TO "F" 401+00 | 0.7 | 0.7 | 632.9 | 1384.0 | 85.2 | 186.4 | 0.3 | 0.6 | 9678.2 | 11021.4 | 9678.2 | 11021.4 |
| L-40 | "F" 401+00 TO "F" 415+00 | 0.7 | 0.7 | | | | | | | 12078.9 | 11049.0 | 12078.9 | 11049.0 |
| L-41 | "F" 415+00 TO "F" 428+50 | 0.6 | 0.7 | 112.4 | 2285.5 | 15.1 | 307.8 | 0.1 | 1.0 | 11862.0 | 8881.2 | 11862.0 | 8881.2 |
| L-42 | "F" 428+50 TO "F" 438+50 | 0.5 | 0.8 | 2636.2 | 2436.9 | 355.0 | 328.2 | 1.1 | 1.0 | 8506.1 | 5746.0 | 8506.1 | 5746.0 |
| L-43 | "F" 438+50 TO "F" 446+50 | 0.3 | 1.0 | 1270.2 | 5669.5 | 171.1 | 763.6 | 0.5 | 2.4 | 6465.3 | 4696.8 | 6465.3 | 4696.8 |
| L-44 | "F" 446+50 TO "F" 461+00 | 0.6 | 0.4 | 753.1 | 2963.5 | 101.4 | 399.1 | 0.3 | 1.2 | 11696.3 | 9970.0 | 11696.3 | 9970.0 |
| L-45 | "F" 461+00 TO "F" 475+50 | 0.7 | 0.6 | | 191.2 | | 25.8 | | 0.1 | 11470.4 | 11236.6 | 11470.4 | 11236.6 |
| L-46 | "F" 475+50 TO "F" 489+50 | 0.7 | 0.6 | 961.9 | 644.7 | 129.6 | 86.8 | 0.4 | 0.3 | 10604.9 | 9350.4 | 10604.9 | 9350.4 |
| L-47 | "F" 489+50 TO "F" 503+50 | 1.0 | 0.6 | 2864.4 | 1306.1 | 385.8 | 175.9 | 1.2 | 0.6 | 8624.3 | 8868.1 | 8624.3 | 8868.1 |
| L-48 | "F" 503+50 TO "F" 517+50 | 0.3 | 0.3 | 131.3 | | 17.7 | | 0.1 | | 3109.2 | 2993.4 | 3109.2 | 2993.4 |
| L-49 | "F" 517+50 TO "F" 531+20 | 0.7 | 0.7 | | | | | | | 5842.9 | 6141.8 | 5842.9 | 6141.8 |
| L-50 | "F" 531+20 TO "F" 543+00 | 0.5 | 0.3 | | | | | | | 4113.7 | 3022.1 | 4113.7 | 3022.1 |
| L-51 | "F" 543+00 TO "G" 84+00 | 0.6 | | | | | | | | 6917.7 | | 6917.7 | |
| L-52 | "G" 84+00 TO "G" 98+00 | 0.7 | | | | | | | | 7438.5 | | 7438.5 | |
| L-53 | "G" 98+00 TO "G" 108+50 | 0.4 | | 1409.1 | | 189.8 | | 0.6 | | 5738.7 | | 5738.7 | |
| L-54 | "G" 108+50 TO "G" 114+77 | 0.1 | | 1282.3 | | 172.7 | | 0.5 | | 3283.1 | | 3283.1 | |
| L-55 | "MAG" 115+30 TO "MAG" 120+00 | | | 1128.4 | | 152.0 | | 0.5 | | | | | |
| | SUBTOTAL | 21.5 | 32.1 | | 194142.2 | 18011.2 | 26146.8 | 42.0 | 81.1 | 365775.8 | 334575.2 | 365775.8 | 334575.2 |
| | TOTAL | 53.6 | | 338260.6 | | 44158.1 | | 123.1 | | 700351 | | 700351 | |

# SUMMARY OF QUANTITIES

Q-2

STATE OF CALIFORNIA - DEPARTMENT OF TRANSPORTATION
Caltrans® DESIGN BRANCH B

FUNCTIONAL SUPERVISOR: CHRISTOPHER LE
CALCULATED-DESIGNED BY: JUAN DELIRA
CHECKED BY: CHRISTOPHER LE
REVISED BY: J. DELIRA
DATE REVISED: 02-14-11

LAST REVISION 02-14-11 | DATE PLOTTED => 21-JUN-2011 | TIME PLOTTED => 08:23

| Dist | COUNTY | ROUTE | POST MILES TOTAL PROJECT | SHEET No. | TOTAL SHEETS |
|---|---|---|---|---|---|
| 12 | Ora | 91 | R0.0/R10.1 | 225 | 294 |

REGISTERED CIVIL ENGINEER 04/28/11 DATE

6-20-11
PLANS APPROVAL DATE

REGISTERED PROFESSIONAL ENGINEER JUAN DE LIRA No. C74465 Exp. 12/31/11 CIVIL STATE OF CALIFORNIA

*THE STATE OF CALIFORNIA OR ITS OFFICERS OR AGENTS SHALL NOT BE RESPONSIBLE FOR THE ACCURACY OR COMPLETENESS OF SCANNED COPIES OF THIS PLAN SHEET.*

# ROADWAY QUANTITIES

| SHEET No. | LOCATION | STATION TO STATION | JOINTED PLAIN Conc Pvmt (RAMP TERMINI -RAPID STRENGTH CONCRETE) | LEAN CONCRETE BASE RAPID SETTING | CLASS 2 AS | ROADWAY EXCAVATION | DOWEL BAR (N) | TIE BAR (N) | SEAL Pvmt JOINT | |
|---|---|---|---|---|---|---|---|---|---|---|
| | | | | | | | | | TRANSVERSE | LONGITUDINAL |
| | | | CY | CY | CY | CY | EA | EA | LF | LF |
| L-8 | WB KNOTT Ave OFF-RAMP | "KNT-4" 6+18 TO "KNT-4" 9+68 | 264.7 | 1158.2 | 198.5 | 595.6 | 600 | 140 | 768 | 350 |
| L-20 | WB BROOKHURST St OFF-RAMP | "BRK-4" 19+76 TO "BRK-4" 22+42.89 | 371.6 | 1625.7 | 278.7 | 836.1 | 720 | 216 | 900 | 540 |
| L-23 | EB EUCLID St OFF-RAMP | "EUC-2" 67+82.35 TO "EUC-2" 72+19 | 407.8 | 1784.1 | 305.8 | 917.5 | 1152 | 352 | 1044 | 872 |
| L-34 & L-35 | WB STATE COLLEGE Blvd OFF-RAMP | "STC-4" 32+16 TO "STC-4" 34+00 | 195.7 | 856.1 | 146.8 | 440.3 | 576 | 173 | 468 | 368 |
| L-43 | EB GLASSELL St/KRAEMER Blvd OFF-RAMP | "GLA-1" 41+00 TO "GLA-1" 43+44 | 187.2 | 819.2 | 140.4 | 421.3 | 432 | 100 | 456 | 202 |
| L-43 | WB GLASSELL St/KRAEMER Blvd OFF-RAMP | "KRA-2" 40+74 TO "KRA-2" 42+77 | 217.5 | 951.6 | 163.1 | 489.4 | 360 | 80 | 540 | 400 |
| TOTAL | | | 1644.5 | 7194.7 | 1233.4 | 3700.2 | 3840 | 1061 | 6908 | |

# CONCRETE BARRIER MARKER

| SHEET No. | STATION | CONCRETE BARRIER MARKER |
|---|---|---|
| L-1 to L-48 | "A" 218+92 To "F" 506+05.8 | 1340 |
| | TOTAL | 1340 |

# METAL BEAM GUARD RAILING

| SHEET No. | STATION | END ANCHOR ASSEMBLY (TYPE SFT) | END CAP (TYPE A) | ALTERNATIVE FLARED TERMINAL SYSTEM | ALTERNATIVE IN-LINE TERMINAL SYSTEM | TRANSITION RAILING (TYPE WB) | MBGR (WOOD POST) | REMOVE MBGR | GUARD RAILING DELINEATOR |
|---|---|---|---|---|---|---|---|---|---|
| | | EA | EA | EA | EA | EA | LF | LF | EA |
| L-1 & L-2 | "A" 227+07.45 TO "A" 232+45 | | 1 | | | 1 | 487.5 | 84 | 19 |
| L-2 | "A" 234+09.49 TO "A" 242+44.49 | | | | 1 | 1 | 762.5 | 81 | 31 |
| L-3 | "ORA-3" 8+17.3 TO "ORA-3" 9+02.63 | 1 | | | 1 | | 37.5 | | 2 |
| L-5 & L-6 | "A" 227+02.31 TO "A" 288+43.87 | | | | 1 | 1 | 1075 | 87.5 | 43 |
| L-6 | "A" 290+25.05 TO "A" 291+14.35 | | | 1 | | 1 | 25 | 87.5 | 2 |
| L-20 | "BRK-3" 22+19.79 TO "BRK-3" 23+21.38 | 1 | | 1 | | | 75 | | 3 |
| L-23 | "EUC-1" 67+66.61 TO "EUC-1" 70+94 | 1 | | | 1 | | 275 | | 11 |
| L-28 | "E" 245+79.74 TO "E" 246+67.24 | 1 | | | 1 | | 37.5 | | 2 |
| L-29 | "E" 258+77.64 TO "E" 261+77.17 | | | 1 | | 1 | 237.5 | 63 | 10 |
| L-47 | "TUS-3" 11+45.79 TO "TUS-3" 12+38.29 | 1 | | 1 | | | 37.5 | | 2 |
| L-49 | "E" 526+00 TO "E" 526+70 | | | | | | | 70 | |
| L-54 | "G" 108+95.5 TO "G" 109+75.84 | 1 | | 1 | | | 37.5 | | 2 |
| TOTAL | | 6 | 1 | 5 | 5 | 5 | 3088 | 473 | 127 |

# DIKE QUANTITIES

| SHEET No. | STATION | REMOVE AC DIKE | PLACE HMA DIKE (TYPE C) | PLACE HMA DIKE (TYPE F) | HOT MIX ASPHALT |
|---|---|---|---|---|---|
| | | LF | LF | LF | TON |
| L-1 & L-2 | "A" 227+07.45 TO "A" 232+45 | 512.5 | | 512.5 | 6.8 |
| L-2 | "A" 234+09.49 TO "A" 242+44.49 | 837.5 | 50 | 787.5 | 10.9 |
| L-28 | "E" 245+54.74 TO 246+67.24 | 112.5 | 75 | 37.5 | 1.08 |
| L-29 | "E" 258+77.64 TO "E" 261+77.17 | 300 | 37.5 | 262.5 | 3.79 |
| TOTAL | | 1762.5 | 162.5 | 1600 | 22.57 |

# CURB RAMP DETECTABLE WARNING SURFACE

| SHEET No. | LOCATION | CURB RAMP DETECTABLE WARNING SURFACE |
|---|---|---|
| | | SQFT |
| L-23 | EB EUCLID St OFF-RAMP | 24 |
| | EB EUCLID St ON-RAMP | 24 |
| L-34 | WB STATE COLLEGE Blvd OFF-RAMP | 24 |
| | WB STATE COLLEGE Blvd ON-RAMP | 24 |
| | TOTAL | 96 |

# SUMMARY OF QUANTITIES

Q-3

| REVISED BY | J. DELIRA |
|---|---|
| DATE REVISED | 02-14-11 |
| JUAN DELIRA | CHRISTOPHER LE |
| CALCULATED-DESIGNED BY | |
| CHECKED BY | |
| FUNCTIONAL SUPERVISOR | CHRISTOPHER LE |

STATE OF CALIFORNIA - DEPARTMENT OF TRANSPORTATION
Caltrans DESIGN BRANCH B

LAST REVISION 02-14-11 | DATE PLOTTED => 21-JUN-2011 | TIME PLOTTED => 08:24

| Dist | COUNTY | LOCATION CODE | POST MILES TOTAL PROJECT | SHEET No. | TOTAL SHEETS |
|---|---|---|---|---|---|
| 12 | Ora | 91 | R0.0/R10.1 | 226 | 294 |

REGISTERED ELEC. ENGINEER 04/28/11 DATE

6-20-11
PLANS APPROVAL DATE

REGISTERED PROFESSIONAL ENGINEER JOANNE VO No. E 16748 Exp 9/30/12 ELECTRICAL STATE OF CALIFORNIA

*THE STATE OF CALIFORNIA OR ITS OFFICERS OR AGENTS SHALL NOT BE RESPONSIBLE FOR THE ACCURACY OR COMPLETENESS OF SCANNED COPIES OF THIS PLAN SHEET.*

## QUANTITY ESTIMATE

| ITEM / SHEET No. | LOOP (EA) | TWO-INCH PEDESTRIAN PUSH BUTTON (EA) | NEW PULL BOX (EA) |
|---|---|---|---|
| E-2 | 37 | | - |
| E-3 | 20 | | - |
| E-4 | 44 | | 2 |
| E-5 | 35 | | |
| E-6 | 40 | | 3 |
| E-7 | 48 | | 2 |
| E-8 | 7 | | - |
| E-9 | 8 | | - |
| E-10 | 18 | | - |
| E-11 | 22 | | - |
| E-12 | 37 | | 4 |
| E-13 | 25 | | 2 |
| E-14 | 10 | | 1 |
| E-15 | 22 | | 2 |
| E-16 | - | | - |
| E-17 | 34 | | 2 |
| E-18 | 28 | | - |
| E-19 | 39 | | 1 |
| E-20 | 16 | | 1 |
| E-21 | 18 | | 2 |
| E-22 | 22 | | 2 |
| E-23 | 22 | | 2 |
| E-24 | 28 | | 2 |
| E-25 | 25 | | 1 |
| E-26 | 10 | | - |
| E-27 | 22 | | 2 |
| E-28 | 25 | | 4 |
| E-29 | 14 | | 1 |
| E-30 | | | 2 |
| E-31 | | | 3 |
| E-32 | | | 1 |
| E-33 | | 8 | - |
| | | | - |
| **TOTAL** * | **676** | **8** | **42** |

* TOTAL SHOWN FOR INFORMATION ONLY, ITEM FOR WORK WILL BE PAID FOR ON LUMP SUM BASIS.

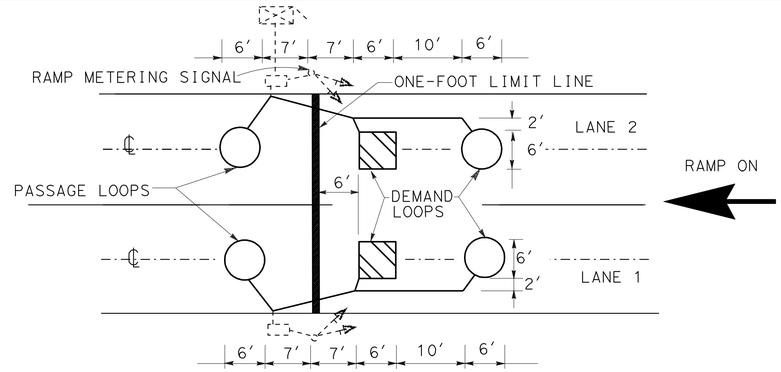


**LOOPS AT TYPICAL 2-LANE ON-RAMP METERING**

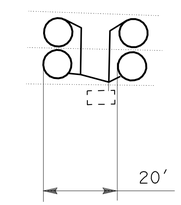


**TYPICAL DOUBLE LOOP AT MAINLINE**

NOTES: (FOR SHEET E-1 TO SHEET E-33)

1. SPLICE NEW LOOP WIRES TO EXISTING dlc.
2. EXISTING MODEL 170 CONTROLLER ASSEMBLY IN MODEL 332 OR 334 CABINET.
3. EXISTING 120/240 V METERED SERVICE IN TYPE III-BF OR III-CF SERVICE EQUIPMENT ENCLOSURE.
4. RC EXISTING PULL BOX. INSTALL 5(T) PULL BOX.
5. SIGNAL LOOPS SHALL BE ONE FOOT BEHIND THE STOP BAR.
6. PROTECT ALL EXISTING ELECTRICAL EQUIPMENT IN PLACE, UNLESS OTHERWISE NOTED.
7. NO SPLICE IN THE MEDIAN PULL BOX.
8. LOOP DETECTOR SPACING IN THE MAINLINE SHALL BE 20′ LEADING EDGE TO LEADING EDGE.
9. THE CONTRACTOR SHALL VERIFY THE EXACT LOCATION OF EXISTING LOOPS PRIOR TO CUTTING NEW LOOPS AND REUSE EXISTING CONDUIT STUB OUT UNLESS OTHERWISE NOTED.
10. LOOP DETECTORS SHALL BE INSTALLED AFTER THE PLACEMENT OF UPPERMOST LAYER OF NEW PAVEMENT, AND AFTER APPLYING TRAFFIC STRIPES AND PAVEMENT MARKINGS.
11. AB EXISTING LOOPS WHERE NEW LOOPS ARE CUT.

# INDUCTIVE LOOP DETECTOR

NO SCALE

**E-1**

THIS PLAN IS ACCURATE FOR ELECTRICAL WORK ONLY.

STATE OF CALIFORNIA - DEPARTMENT OF TRANSPORTATION
Caltrans® ELECTRICAL DESIGN

FUNCTIONAL SUPERVISOR: SHAHRAM SHAHRIARI
CALCULATED-DESIGNED BY: JOANNE VO
CHECKED BY: VANESSA TRUONG
REVISED BY / DATE REVISED

LAST REVISION 03-01-11
DATE PLOTTED => 21-JUN-2011
TIME PLOTTED => 08:38

| Dist | COUNTY | LOCATION CODE | POST MILES TOTAL PROJECT | SHEET No. | TOTAL SHEETS |
|---|---|---|---|---|---|
| 12 | Ora | 91 | R0.0/R10.1 | 227 | 294 |

REGISTERED ELEC. ENGINEER DATE 04/28/11

6-20-11
PLANS APPROVAL DATE

REGISTERED PROFESSIONAL ENGINEER JOANNE VO No. E 16748 Exp 9/30/12 ELECTRICAL STATE OF CALIFORNIA

*THE STATE OF CALIFORNIA OR ITS OFFICERS OR AGENTS SHALL NOT BE RESPONSIBLE FOR THE ACCURACY OR COMPLETENESS OF SCANNED COPIES OF THIS PLAN SHEET.*

FOR COMPLETE RIGHT OF WAY AND ACCURATE ACCESS DATA,
SEE RIGHT OF RECORD MAPS AT DISTRICT OFFICE.

NOTE: (FOR THIS SHEET ONLY)

a. SEE SHEET E-1 FOR NOTES AND DETAILS.

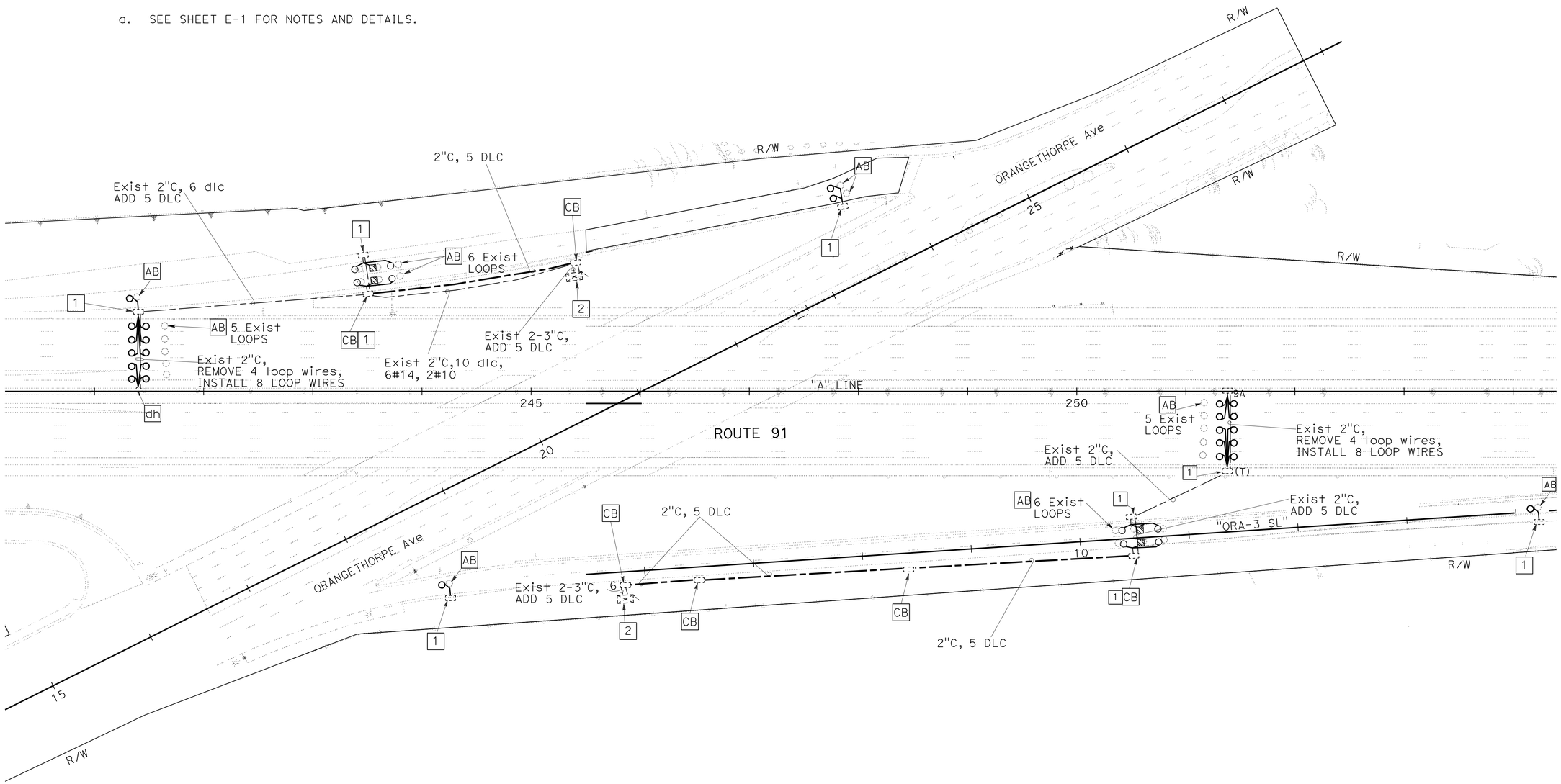


# INDUCTIVE LOOP DETECTOR

SCALE: 1" = 50'

E-2

THIS PLAN IS ACCURATE FOR ELECTRICAL WORK ONLY.

STATE OF CALIFORNIA - DEPARTMENT OF TRANSPORTATION
Caltrans®
ELECTRICAL DESIGN

FUNCTIONAL SUPERVISOR: SHAHRAM SHAHRIARI
CALCULATED-DESIGNED BY: JOANNE VO
CHECKED BY: VANESSA TRUONG
REVISED BY
DATE REVISED

LAST REVISION 03-01-11
DATE PLOTTED => 21-JUN-2011
TIME PLOTTED => 08:24

| Dist | COUNTY | LOCATION CODE | POST MILES TOTAL PROJECT | SHEET No. | TOTAL SHEETS |
|---|---|---|---|---|---|
| 12 | Ora | 91 | R0.0/R10.1 | 228 | 294 |

REGISTERED ELEC. ENGINEER 04/28/11 DATE

6-20-11
PLANS APPROVAL DATE

REGISTERED PROFESSIONAL ENGINEER JOANNE VO No. E 16748 Exp 9/30/12 ELECTRICAL STATE OF CALIFORNIA

*THE STATE OF CALIFORNIA OR ITS OFFICERS OR AGENTS SHALL NOT BE RESPONSIBLE FOR THE ACCURACY OR COMPLETENESS OF SCANNED COPIES OF THIS PLAN SHEET.*

FOR COMPLETE RIGHT OF WAY AND ACCURATE ACCESS DATA,
SEE RIGHT OF RECORD MAPS AT DISTRICT OFFICE.

NOTE: (FOR THIS SHEET ONLY)

a. SEE SHEET E-1 FOR NOTES AND DETAILS.

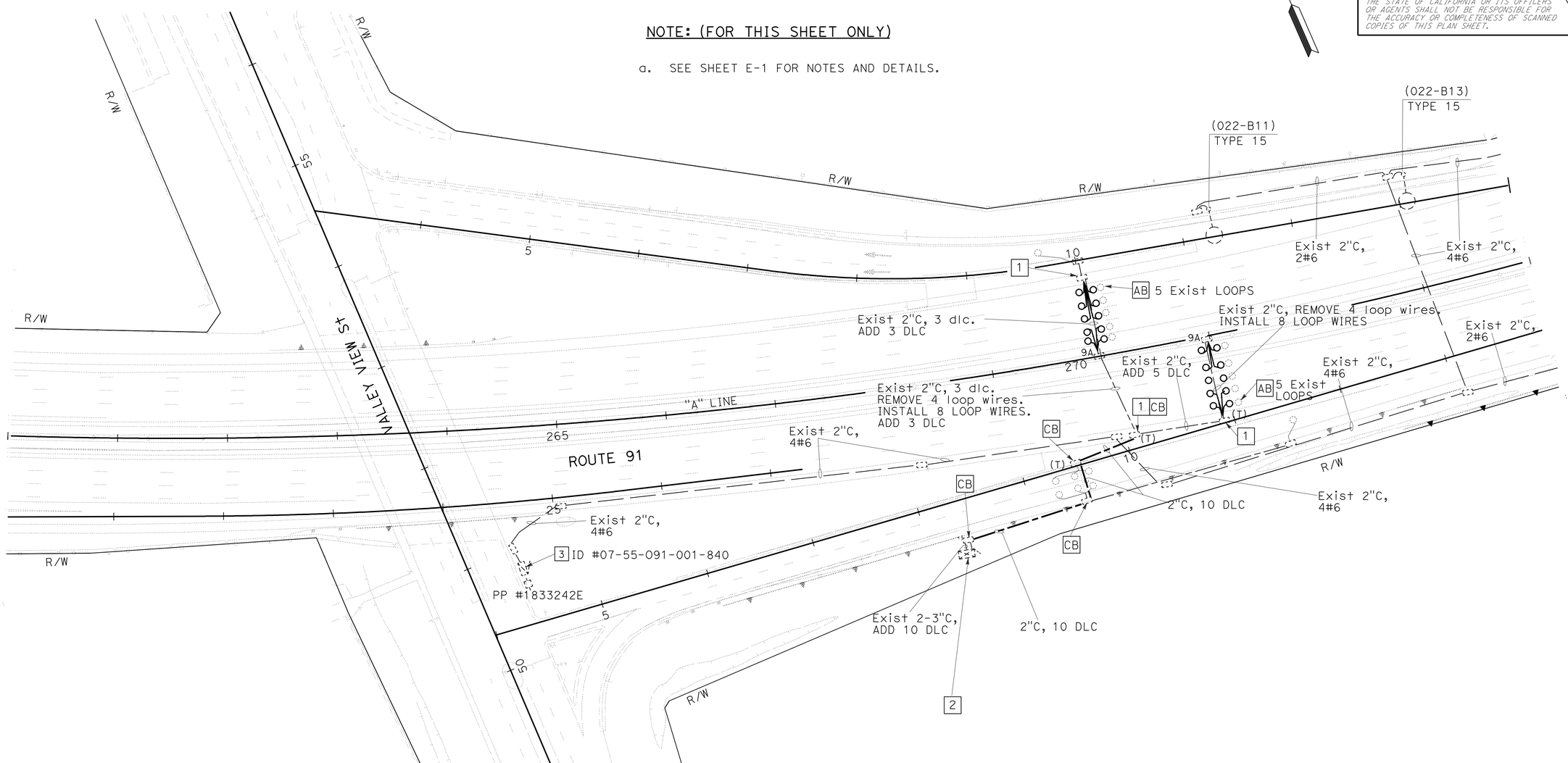


THIS PLAN IS ACCURATE FOR ELECTRICAL WORK ONLY.

# INDUCTIVE LOOP DETECTOR

SCALE: 1" = 50'

**E-3**

STATE OF CALIFORNIA - DEPARTMENT OF TRANSPORTATION
Caltrans® **ELECTRICAL DESIGN**

FUNCTIONAL SUPERVISOR: SHAHRAM SHAHRIARI
CALCULATED-DESIGNED BY: JOANNE VO
CHECKED BY: VANESSA TRUONG
REVISED BY / DATE REVISED

LAST REVISION 03-01-11
DATE PLOTTED => 21-JUN-2011
TIME PLOTTED => 08:37

| Dist | COUNTY | LOCATION CODE | POST MILES TOTAL PROJECT | SHEET No. | TOTAL SHEETS |
|---|---|---|---|---|---|
| 12 | Ora | 91 | R0.0/R10.1 | 229 | 294 |

REGISTERED ELEC. ENGINEER 04/28/11 DATE

6-20-11
PLANS APPROVAL DATE

REGISTERED PROFESSIONAL ENGINEER JOANNE VO No. E 16748 Exp 9/30/12 ELECTRICAL STATE OF CALIFORNIA

*THE STATE OF CALIFORNIA OR ITS OFFICERS OR AGENTS SHALL NOT BE RESPONSIBLE FOR THE ACCURACY OR COMPLETENESS OF SCANNED COPIES OF THIS PLAN SHEET.*

FOR COMPLETE RIGHT OF WAY AND ACCURATE ACCESS DATA,
SEE RIGHT OF RECORD MAPS AT DISTRICT OFFICE.

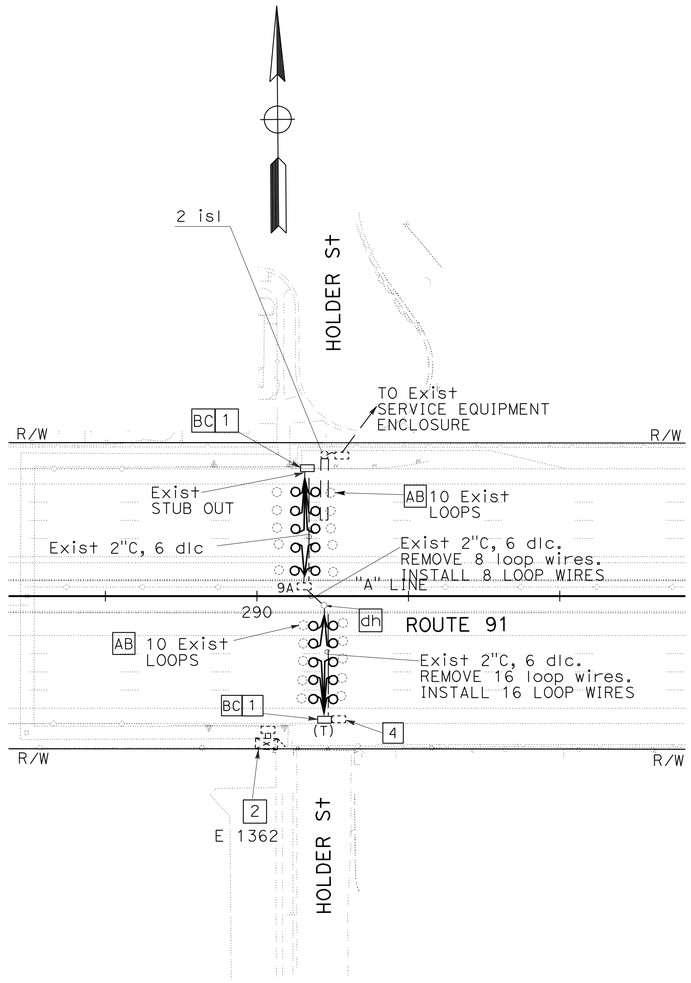


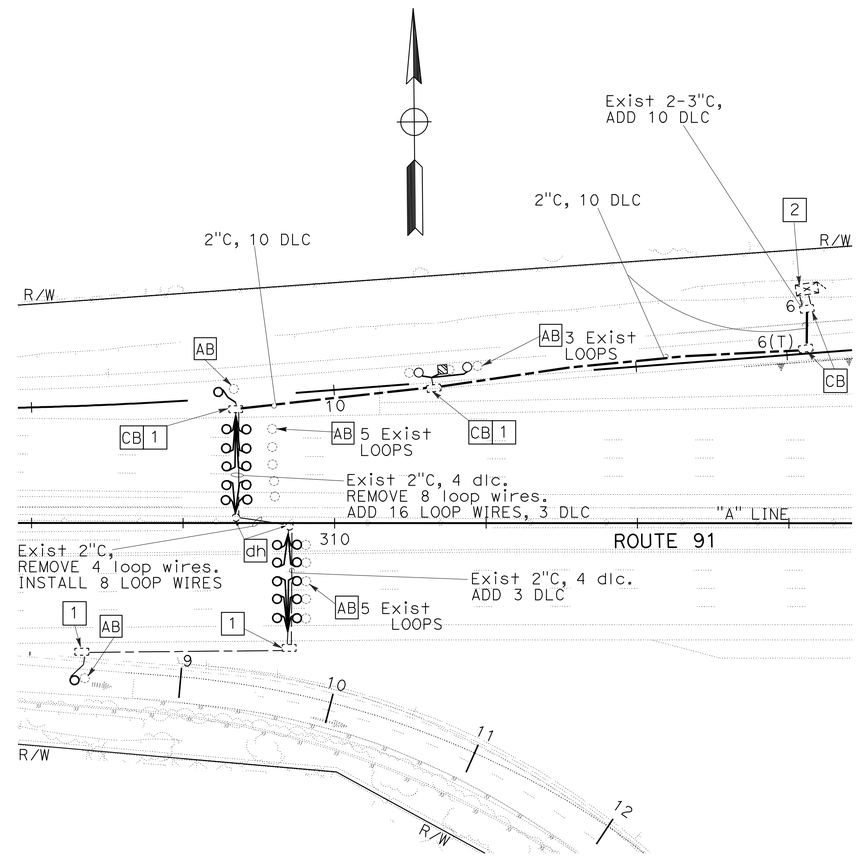


NOTE: (FOR THIS SHEET ONLY)

a. SEE SHEET E-1 FOR NOTES AND DETAILS.

# INDUCTIVE LOOP DETECTOR

SCALE: 1" = 50'

E-4

THIS PLAN IS ACCURATE FOR ELECTRICAL WORK ONLY.

| REVISED BY | DATE REVISED |
|---|---|
| JOANNE VO | VANESSA TRUONG |
| CALCULATED-DESIGNED BY | CHECKED BY |
| FUNCTIONAL SUPERVISOR | SHAHRAM SHAHRIARI |

STATE OF CALIFORNIA - DEPARTMENT OF TRANSPORTATION
Caltrans
ELECTRICAL DESIGN

LAST REVISION 03-01-11 | DATE PLOTTED => 21-JUN-2011 TIME PLOTTED => 08:37

| Dist | COUNTY | LOCATION CODE | POST MILES TOTAL PROJECT | SHEET No. | TOTAL SHEETS |
|---|---|---|---|---|---|
| 12 | Ora | 91 | R0.0/R10.1 | 230 | 294 |

REGISTERED ELEC. ENGINEER 04/28/11 DATE

6-20-11
PLANS APPROVAL DATE

REGISTERED PROFESSIONAL ENGINEER JOANNE VO No. E 16748 Exp 9/30/12 ELECTRICAL STATE OF CALIFORNIA

*THE STATE OF CALIFORNIA OR ITS OFFICERS OR AGENTS SHALL NOT BE RESPONSIBLE FOR THE ACCURACY OR COMPLETENESS OF SCANNED COPIES OF THIS PLAN SHEET.*

FOR COMPLETE RIGHT OF WAY AND ACCURATE ACCESS DATA, SEE RIGHT OF RECORD MAPS AT DISTRICT OFFICE.

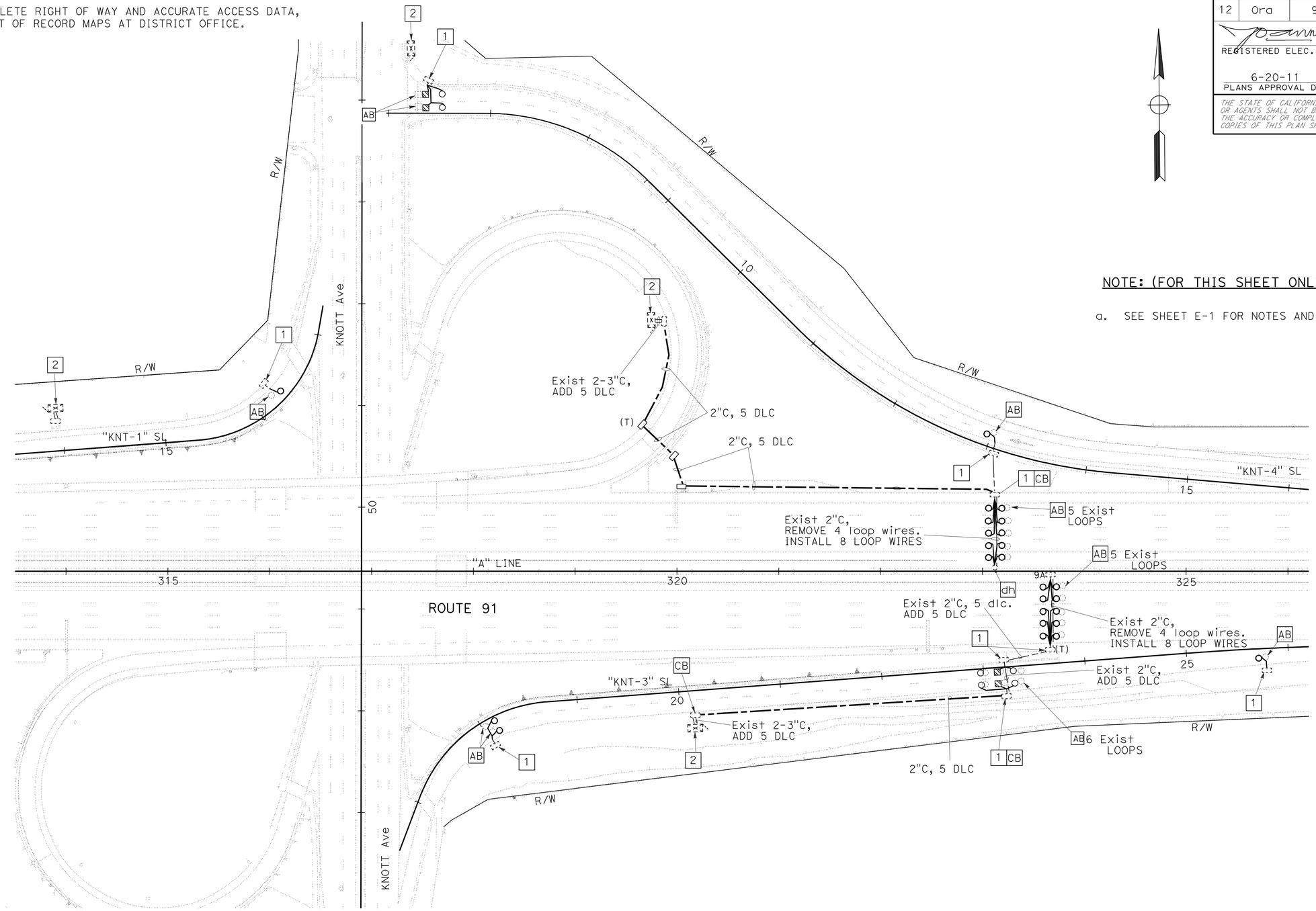


## NOTE: (FOR THIS SHEET ONLY)

a. SEE SHEET E-1 FOR NOTES AND DETAILS.

# INDUCTIVE LOOP DETECTOR

SCALE: 1" = 50'

THIS PLAN IS ACCURATE FOR ELECTRICAL WORK ONLY.

**E-5**

STATE OF CALIFORNIA - DEPARTMENT OF TRANSPORTATION
Caltrans® ELECTRICAL DESIGN

FUNCTIONAL SUPERVISOR: SHAHRAM SHAHRIARI
CALCULATED-DESIGNED BY: JOANNE VO
CHECKED BY: VANESSA TRUONG
REVISED BY
DATE REVISED

LAST REVISION 03-01-11
DATE PLOTTED => 21-JUN-2011
TIME PLOTTED => 08:37

| Dist | COUNTY | LOCATION CODE | POST MILES TOTAL PROJECT | SHEET No. | TOTAL SHEETS |
|---|---|---|---|---|---|
| 12 | Ora | 91 | R0.0/R10.1 | 231 | 294 |

REGISTERED ELEC. ENGINEER 04/28/11 DATE

6-20-11
PLANS APPROVAL DATE

REGISTERED PROFESSIONAL ENGINEER JOANNE VO No. E 16748 Exp 9/30/12 ELECTRICAL STATE OF CALIFORNIA

*THE STATE OF CALIFORNIA OR ITS OFFICERS OR AGENTS SHALL NOT BE RESPONSIBLE FOR THE ACCURACY OR COMPLETENESS OF SCANNED COPIES OF THIS PLAN SHEET.*

FOR COMPLETE RIGHT OF WAY AND ACCURATE ACCESS DATA, SEE RIGHT OF RECORD MAPS AT DISTRICT OFFICE.

NOTE: (FOR THIS SHEET ONLY)

a. SEE SHEET E-1 FOR NOTES AND DETAILS.

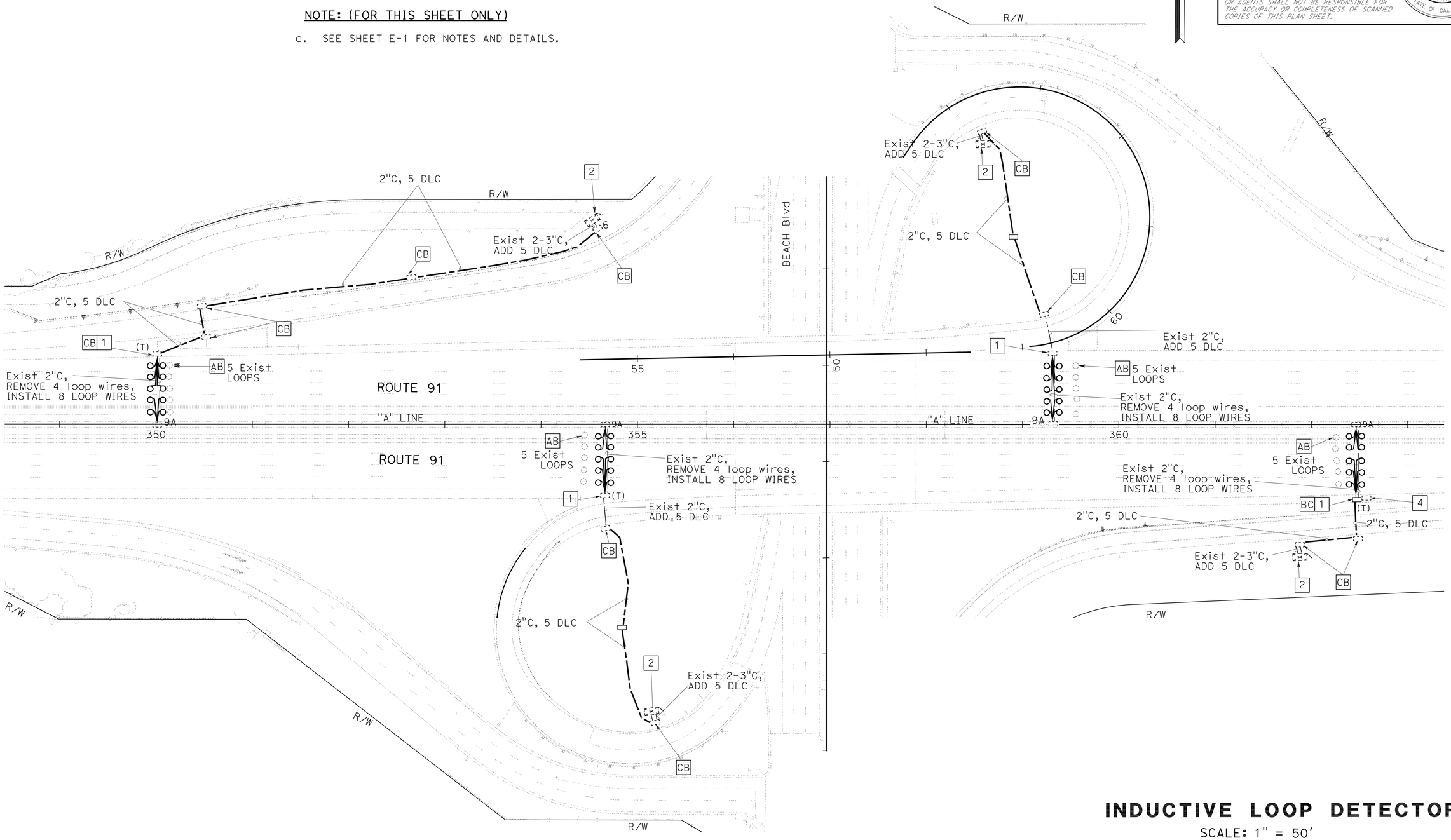


THIS PLAN IS ACCURATE FOR ELECTRICAL WORK ONLY.

# INDUCTIVE LOOP DETECTOR

SCALE: 1" = 50'

E-6

STATE OF CALIFORNIA - DEPARTMENT OF TRANSPORTATION
Caltrans
ELECTRICAL DESIGN

FUNCTIONAL SUPERVISOR: SHAHRAM SHAHRIARI
CALCULATED-DESIGNED BY: JOANNE VO
CHECKED BY: VANESSA TRUONG
REVISED BY
DATE REVISED

LAST REVISION 03-01-11
DATE PLOTTED => 22-JUN-2011
TIME PLOTTED => 10:14

| Dist | COUNTY | LOCATION CODE | POST MILES TOTAL PROJECT | SHEET No. | TOTAL SHEETS |
|---|---|---|---|---|---|
| 12 | Ora | 91 | R0.0/R10.1 | 232 | 294 |

REGISTERED ELEC. ENGINEER 04/28/11 DATE

6-20-11
PLANS APPROVAL DATE

REGISTERED PROFESSIONAL ENGINEER JOANNE VO No. E 16748 Exp 9/30/12 ELECTRICAL STATE OF CALIFORNIA

*THE STATE OF CALIFORNIA OR ITS OFFICERS OR AGENTS SHALL NOT BE RESPONSIBLE FOR THE ACCURACY OR COMPLETENESS OF SCANNED COPIES OF THIS PLAN SHEET.*

FOR COMPLETE RIGHT OF WAY AND ACCURATE ACCESS DATA,
SEE RIGHT OF RECORD MAPS AT DISTRICT OFFICE.

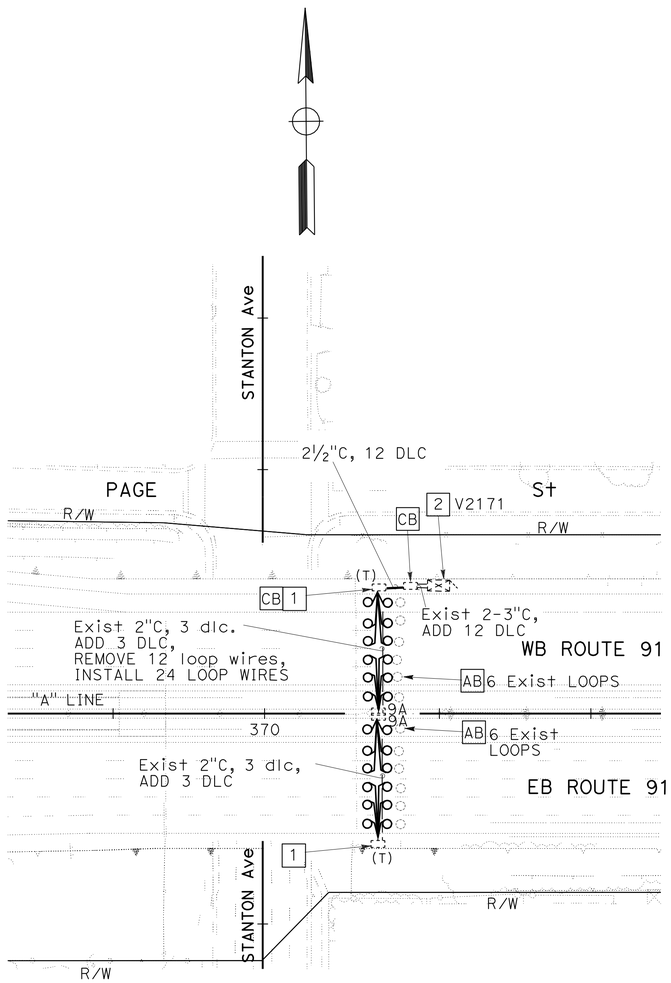


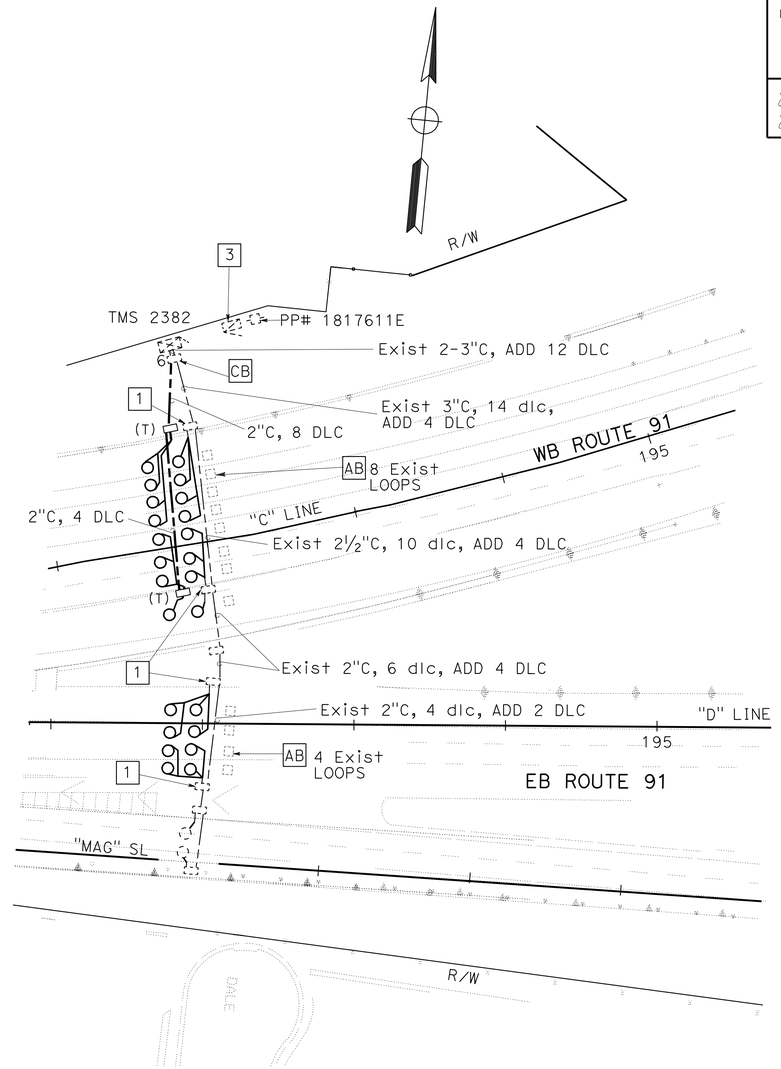


NOTE: (FOR THIS SHEET ONLY)

a. SEE SHEET E-1 FOR NOTES AND DETAILS.

# INDUCTIVE LOOP DETECTOR

SCALE: 1" = 50'

E-7

THIS PLAN IS ACCURATE FOR ELECTRICAL WORK ONLY.

STATE OF CALIFORNIA - DEPARTMENT OF TRANSPORTATION
Caltrans® ELECTRICAL DESIGN

FUNCTIONAL SUPERVISOR: SHAHRAM SHAHRIARI
CALCULATED-DESIGNED BY: JOANNE VO
CHECKED BY: VANESSA TRUONG
REVISED BY
DATE REVISED

LAST REVISION 03-01-11 DATE PLOTTED => 22-JUN-2011 TIME PLOTTED => 10:20

| Dist | COUNTY | LOCATION CODE | POST MILES TOTAL PROJECT | SHEET No. | TOTAL SHEETS |
|---|---|---|---|---|---|
| 12 | Ora | 91 | R0.0/R10.1 | 233 | 294 |

REGISTERED ELEC. ENGINEER 04/28/11 DATE

6-20-11
PLANS APPROVAL DATE

REGISTERED PROFESSIONAL ENGINEER JOANNE VO No. E 16748 Exp 9/30/12 ELECTRICAL STATE OF CALIFORNIA

*THE STATE OF CALIFORNIA OR ITS OFFICERS OR AGENTS SHALL NOT BE RESPONSIBLE FOR THE ACCURACY OR COMPLETENESS OF SCANNED COPIES OF THIS PLAN SHEET.*

FOR COMPLETE RIGHT OF WAY AND ACCURATE ACCESS DATA, SEE RIGHT OF RECORD MAPS AT DISTRICT OFFICE.

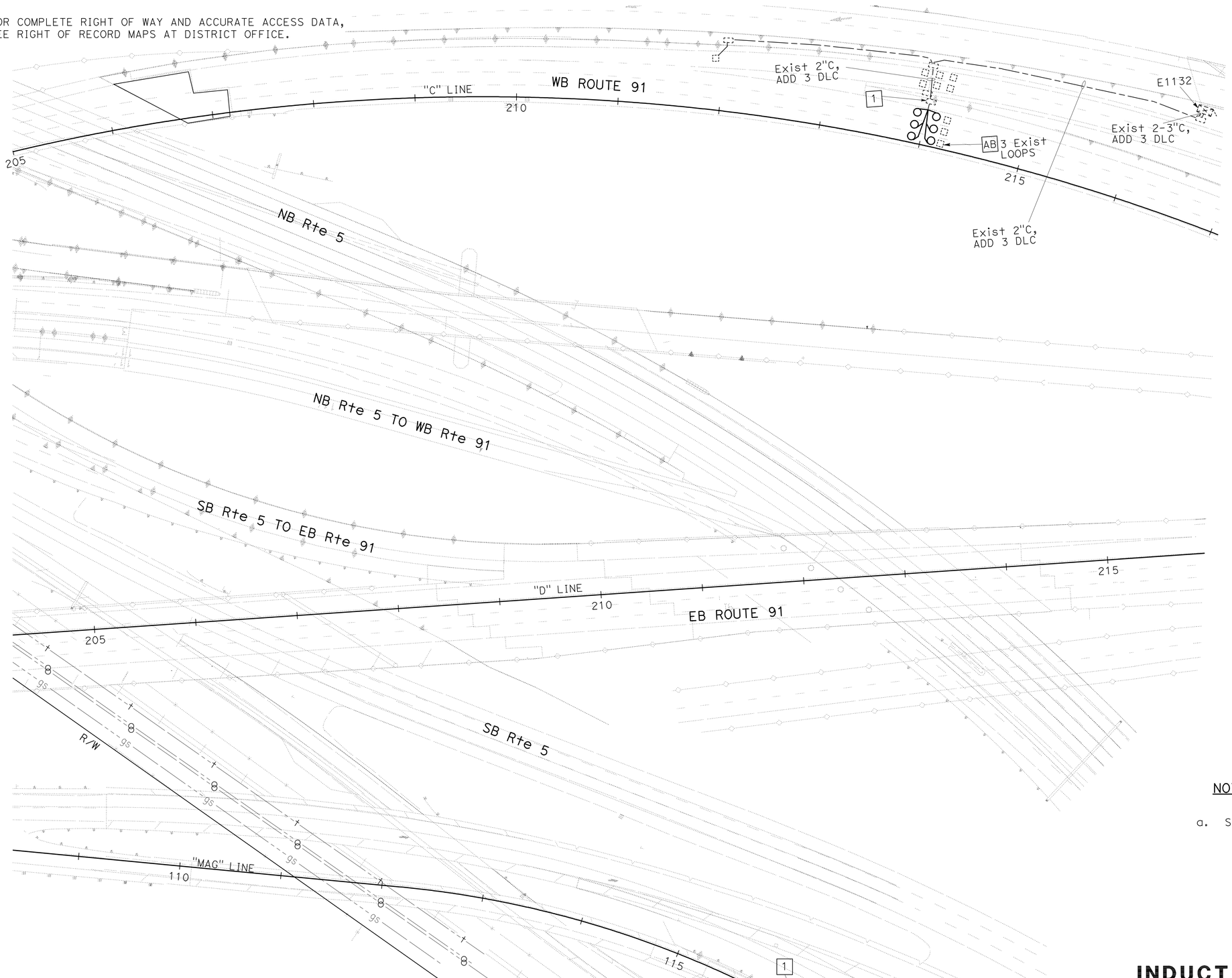


NOTE: (FOR THIS SHEET ONLY)

a. SEE SHEET E-1 FOR NOTES AND DETAILS.

# INDUCTIVE LOOP DETECTOR

SCALE: 1" = 50'

E-8

THIS PLAN IS ACCURATE FOR ELECTRICAL WORK ONLY.

STATE OF CALIFORNIA - DEPARTMENT OF TRANSPORTATION
Caltrans® ELECTRICAL DESIGN

FUNCTIONAL SUPERVISOR: SHAHRAM SHAHRIARI
CALCULATED-DESIGNED BY: JOANNE VO
CHECKED BY: VANESSA TRUONG
REVISED BY
DATE REVISED

LAST REVISION 03-01-11
DATE PLOTTED => 21-JUN-2011
TIME PLOTTED => 08:14

| Dist | COUNTY | LOCATION CODE | POST MILES TOTAL PROJECT | SHEET No. | TOTAL SHEETS |
|---|---|---|---|---|---|
| 12 | Ora | 91 | R0.0/R10.1 | 234 | 294 |

REGISTERED ELEC. ENGINEER 04/28/11 DATE

6-20-11
PLANS APPROVAL DATE

REGISTERED PROFESSIONAL ENGINEER
JOANNE VO
No. E 16748
Exp 9/30/12
ELECTRICAL
STATE OF CALIFORNIA

*THE STATE OF CALIFORNIA OR ITS OFFICERS OR AGENTS SHALL NOT BE RESPONSIBLE FOR THE ACCURACY OR COMPLETENESS OF SCANNED COPIES OF THIS PLAN SHEET.*

FOR COMPLETE RIGHT OF WAY AND ACCURATE ACCESS DATA,
SEE RIGHT OF RECORD MAPS AT DISTRICT OFFICE.

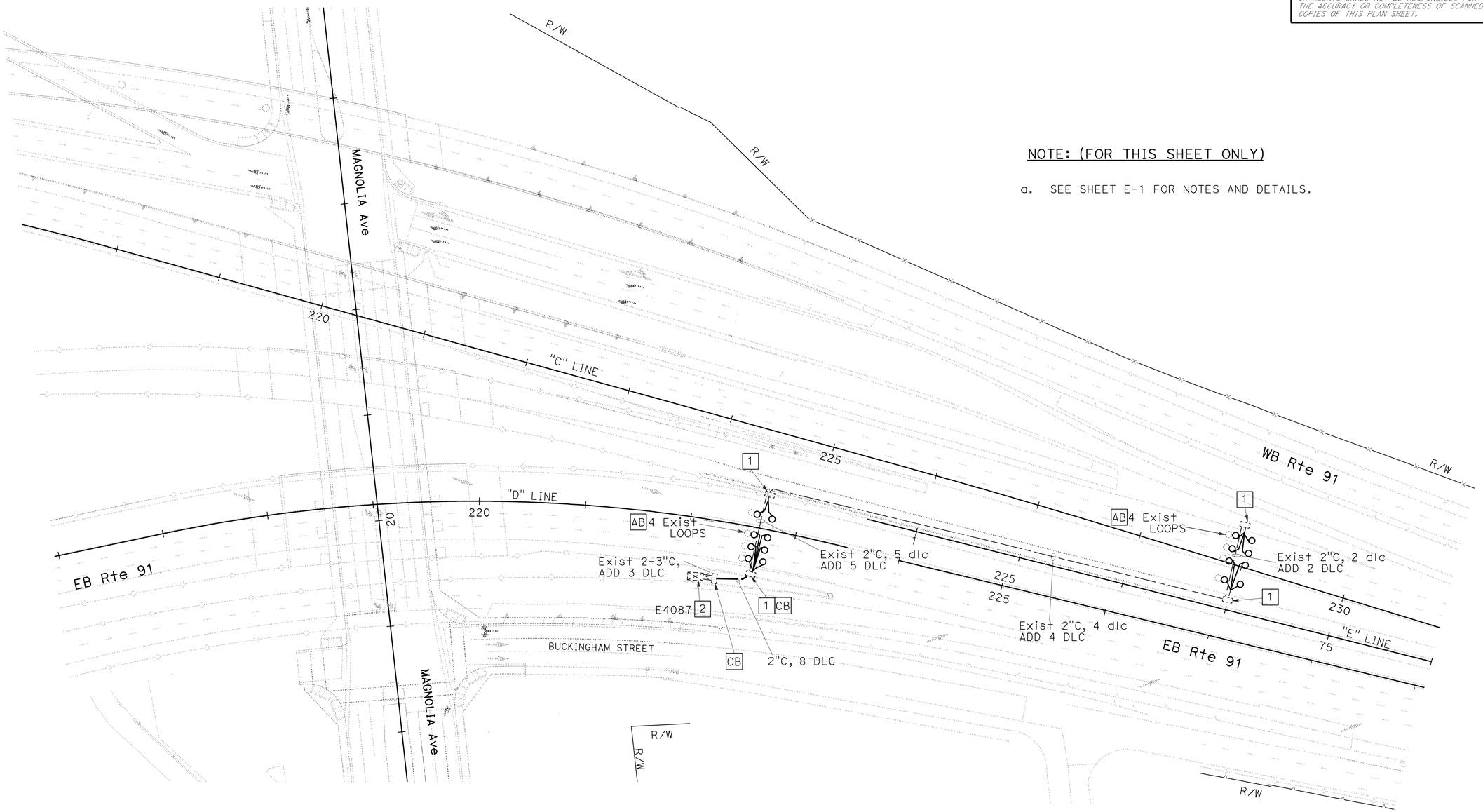


NOTE: (FOR THIS SHEET ONLY)

a. SEE SHEET E-1 FOR NOTES AND DETAILS.

# INDUCTIVE LOOP DETECTOR

SCALE: 1" = 50'

THIS PLAN IS ACCURATE FOR ELECTRICAL WORK ONLY.

E-9

| REVISED BY | DATE REVISED |
|---|---|
| JOANNE VO | |
| VANESSA TRUONG | |

CALCULATED-DESIGNED BY: JOANNE VO
CHECKED BY: VANESSA TRUONG
FUNCTIONAL SUPERVISOR: SHAHRAM SHAHRIARI

STATE OF CALIFORNIA - DEPARTMENT OF TRANSPORTATION
Caltrans® ELECTRICAL DESIGN

LAST REVISION 03-01-11 | DATE PLOTTED => 21-JUN-2011 | TIME PLOTTED => 08:14

| Dist | COUNTY | LOCATION CODE | POST MILES TOTAL PROJECT | SHEET No. | TOTAL SHEETS |
|---|---|---|---|---|---|
| 12 | Ora | 91 | R0.0/R10.1 | 235 | 294 |

REGISTERED ELEC. ENGINEER DATE 04/28/11

PLANS APPROVAL DATE 6-20-11

REGISTERED PROFESSIONAL ENGINEER JOANNE VO No. E 16748 Exp 9/30/12 ELECTRICAL STATE OF CALIFORNIA

THE STATE OF CALIFORNIA OR ITS OFFICERS OR AGENTS SHALL NOT BE RESPONSIBLE FOR THE ACCURACY OR COMPLETENESS OF SCANNED COPIES OF THIS PLAN SHEET.

FOR COMPLETE RIGHT OF WAY AND ACCURATE ACCESS DATA, SEE RIGHT OF RECORD MAPS AT DISTRICT OFFICE.

NOTE: (FOR THIS SHEET ONLY)

a. SEE SHEET E-1 FOR NOTES AND DETAILS.

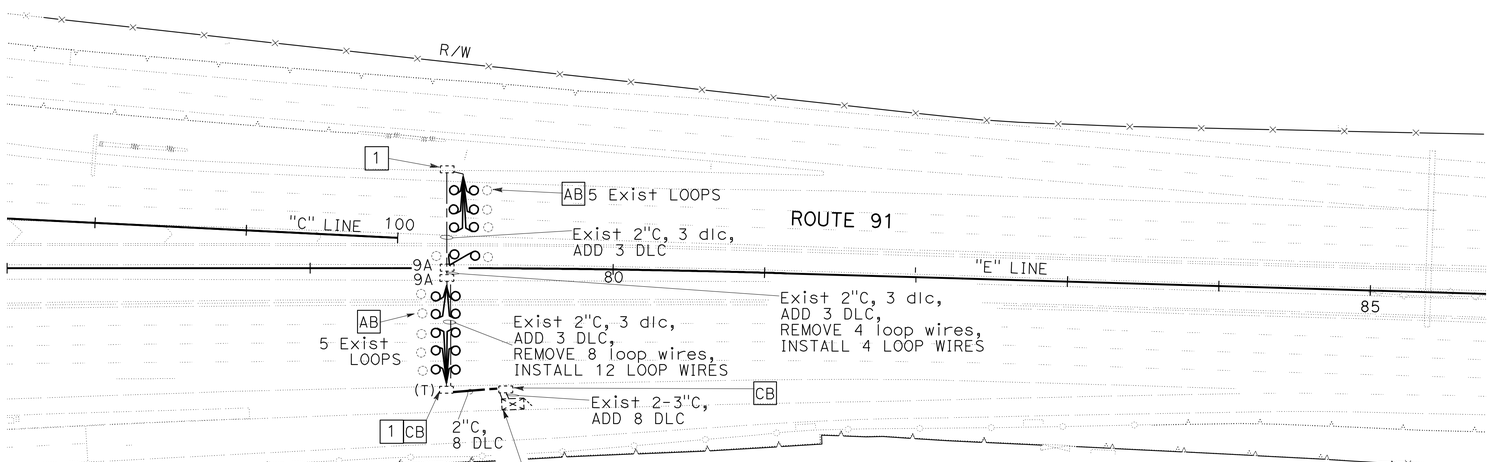


# INDUCTIVE LOOP DETECTOR

SCALE: 1" = 50'

E-10

THIS PLAN IS ACCURATE FOR ELECTRICAL WORK ONLY.

STATE OF CALIFORNIA - DEPARTMENT OF TRANSPORTATION

Caltrans® ELECTRICAL DESIGN

FUNCTIONAL SUPERVISOR: SHAHRAM SHAHRIARI

CALCULATED-DESIGNED BY: JOANNE VO

CHECKED BY: VANESSA TRUONG

REVISED BY / DATE REVISED

LAST REVISION 03-01-11

DATE PLOTTED => 22-JUN-2011

TIME PLOTTED => 10:15

| Dist | COUNTY | LOCATION CODE | POST MILES TOTAL PROJECT | SHEET No. | TOTAL SHEETS |
|---|---|---|---|---|---|
| 12 | Ora | 91 | R0.0/R10.1 | 236 | 294 |

REGISTERED ELEC. ENGINEER 04/28/11 DATE

6-20-11
PLANS APPROVAL DATE

REGISTERED PROFESSIONAL ENGINEER
JOANNE VO
No. E 16748
Exp 9/30/12
ELECTRICAL
STATE OF CALIFORNIA

*THE STATE OF CALIFORNIA OR ITS OFFICERS OR AGENTS SHALL NOT BE RESPONSIBLE FOR THE ACCURACY OR COMPLETENESS OF SCANNED COPIES OF THIS PLAN SHEET.*

FOR COMPLETE RIGHT OF WAY AND ACCURATE ACCESS DATA,
SEE RIGHT OF RECORD MAPS AT DISTRICT OFFICE.

NOTE: (FOR THIS SHEET ONLY)

a. SEE SHEET E-1 FOR NOTES AND DETAILS.

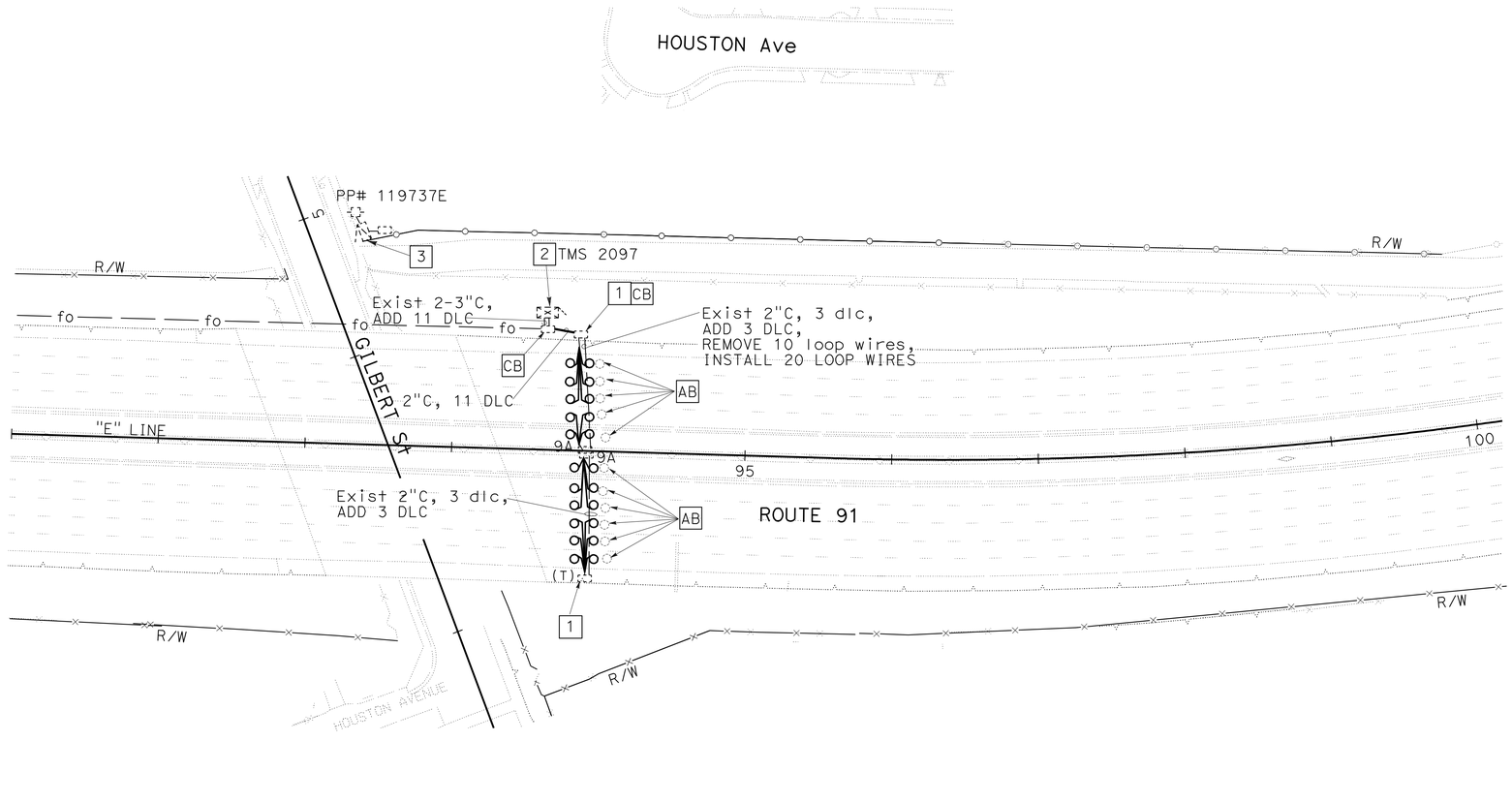


# INDUCTIVE LOOP DETECTOR

SCALE: 1" = 50'

**E-11**

THIS PLAN IS ACCURATE FOR ELECTRICAL WORK ONLY.

STATE OF CALIFORNIA - DEPARTMENT OF TRANSPORTATION
Caltrans® ELECTRICAL DESIGN

FUNCTIONAL SUPERVISOR: SHAHRAM SHAHRIARI
CALCULATED-DESIGNED BY: JOANNE VO
CHECKED BY: VANESSA TRUONG
REVISED BY
DATE REVISED

LAST REVISION 03-01-11 | DATE PLOTTED => 22-JUN-2011 | TIME PLOTTED => 10:15

| Dist | COUNTY | LOCATION CODE | POST MILES TOTAL PROJECT | SHEET No. | TOTAL SHEETS |
|---|---|---|---|---|---|
| 12 | Ora | 91 | R0.0/R10.1 | 237 | 294 |

04/28/11
REGISTERED ELEC. ENGINEER DATE

6-20-11
PLANS APPROVAL DATE

REGISTERED PROFESSIONAL ENGINEER
JOANNE VO
No. E 16748
Exp 9/30/12
ELECTRICAL
STATE OF CALIFORNIA

*THE STATE OF CALIFORNIA OR ITS OFFICERS OR AGENTS SHALL NOT BE RESPONSIBLE FOR THE ACCURACY OR COMPLETENESS OF SCANNED COPIES OF THIS PLAN SHEET.*

FOR COMPLETE RIGHT OF WAY AND ACCURATE ACCESS DATA,
SEE RIGHT OF RECORD MAPS AT DISTRICT OFFICE.

NOTE: (FOR THIS SHEET ONLY)

a. SEE SHEET E-1 FOR NOTES AND DETAILS.

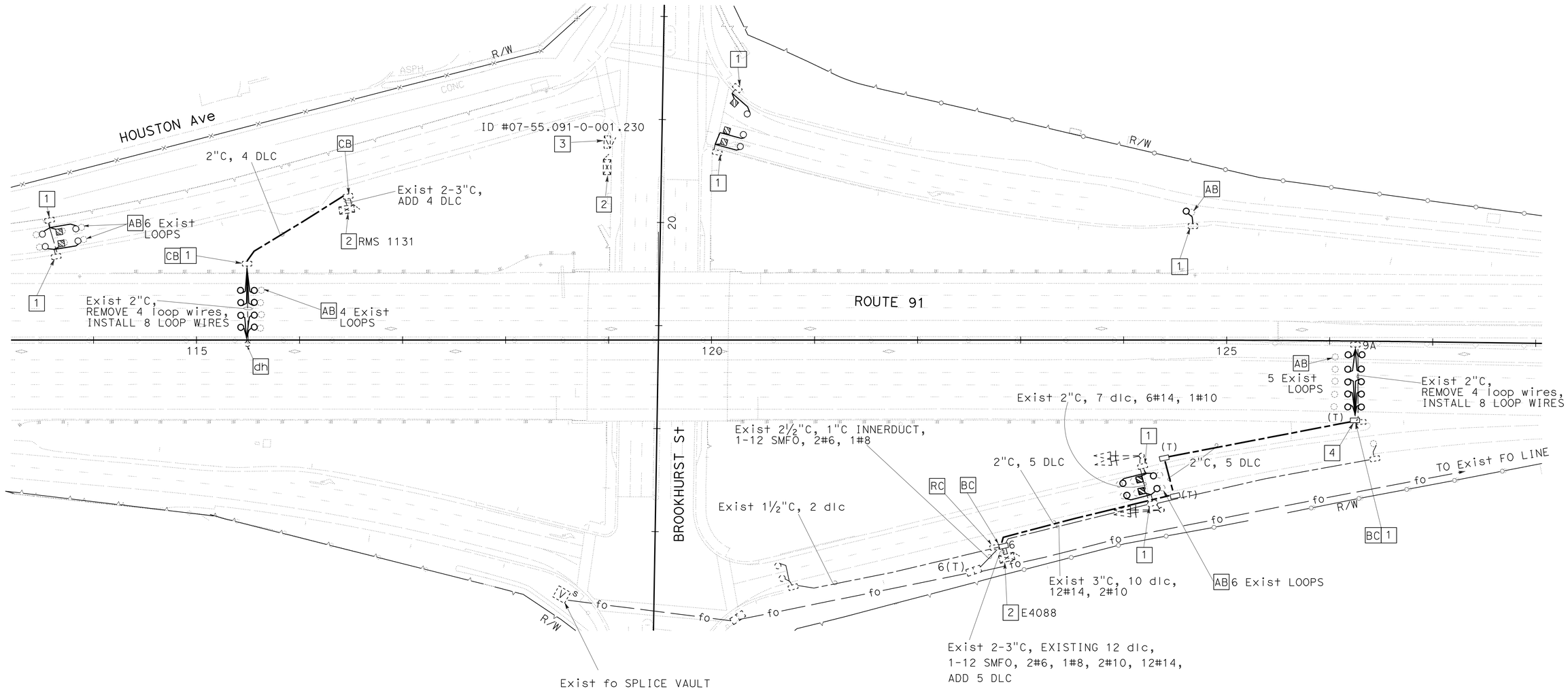


# INDUCTIVE LOOP DETECTOR

SCALE: 1" = 50'

**E-12**

THIS PLAN IS ACCURATE FOR ELECTRICAL WORK ONLY.

STATE OF CALIFORNIA - DEPARTMENT OF TRANSPORTATION
Caltrans® ELECTRICAL DESIGN

FUNCTIONAL SUPERVISOR: SHAHRAM SHAHRIARI
CALCULATED-DESIGNED BY: JOANNE VO
CHECKED BY: VANESSA TRUONG
REVISED BY
DATE REVISED

LAST REVISION 03-01-11
DATE PLOTTED => 22-JUN-2011
TIME PLOTTED => 10:15

| Dist | COUNTY | LOCATION CODE | POST MILES TOTAL PROJECT | SHEET No. | TOTAL SHEETS |
|---|---|---|---|---|---|
| 12 | Ora | 91 | R0.0/R10.1 | 238 | 294 |

REGISTERED ELEC. ENGINEER 04/28/11 DATE

6-20-11
PLANS APPROVAL DATE

REGISTERED PROFESSIONAL ENGINEER JOANNE VO No. E 16748 Exp 9/30/12 ELECTRICAL STATE OF CALIFORNIA

*THE STATE OF CALIFORNIA OR ITS OFFICERS OR AGENTS SHALL NOT BE RESPONSIBLE FOR THE ACCURACY OR COMPLETENESS OF SCANNED COPIES OF THIS PLAN SHEET.*

FOR COMPLETE RIGHT OF WAY AND ACCURATE ACCESS DATA,
SEE RIGHT OF RECORD MAPS AT DISTRICT OFFICE.

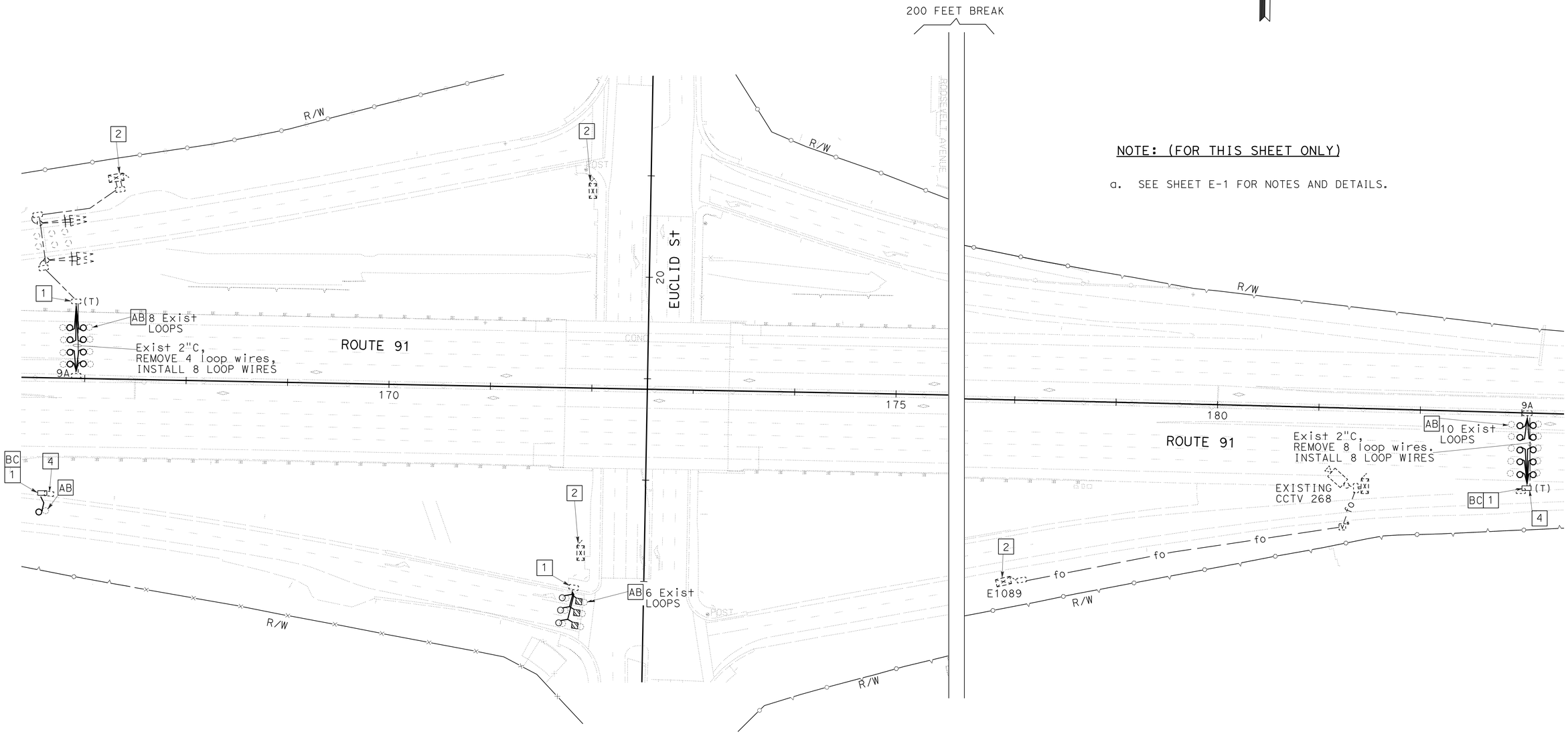


NOTE: (FOR THIS SHEET ONLY)

a. SEE SHEET E-1 FOR NOTES AND DETAILS.

# INDUCTIVE LOOP DETECTOR

SCALE: 1" = 50'

**E-13**

THIS PLAN IS ACCURATE FOR ELECTRICAL WORK ONLY.

STATE OF CALIFORNIA - DEPARTMENT OF TRANSPORTATION
Caltrans® ELECTRICAL DESIGN

FUNCTIONAL SUPERVISOR: SHAHRAM SHAHRIARI
CALCULATED-DESIGNED BY: JOANNE VO
CHECKED BY: VANESSA TRUONG
REVISED BY
DATE REVISED

LAST REVISION 03-01-11
DATE PLOTTED => 22-JUN-2011
TIME PLOTTED => 10:16

| Dist | COUNTY | LOCATION CODE | POST MILES TOTAL PROJECT | SHEET No. | TOTAL SHEETS |
|---|---|---|---|---|---|
| 12 | Ora | 91 | R0.0/R10.1 | 239 | 294 |

REGISTERED ELEC. ENGINEER 04/28/11 DATE

6-20-11
PLANS APPROVAL DATE

REGISTERED PROFESSIONAL ENGINEER JOANNE VO No. E 16748 Exp 9/30/12 ELECTRICAL STATE OF CALIFORNIA

*THE STATE OF CALIFORNIA OR ITS OFFICERS OR AGENTS SHALL NOT BE RESPONSIBLE FOR THE ACCURACY OR COMPLETENESS OF SCANNED COPIES OF THIS PLAN SHEET.*

FOR COMPLETE RIGHT OF WAY AND ACCURATE ACCESS DATA,
SEE RIGHT OF RECORD MAPS AT DISTRICT OFFICE.

NOTE: (FOR THIS SHEET ONLY)

a. SEE SHEET E-1 FOR NOTES AND DETAILS.

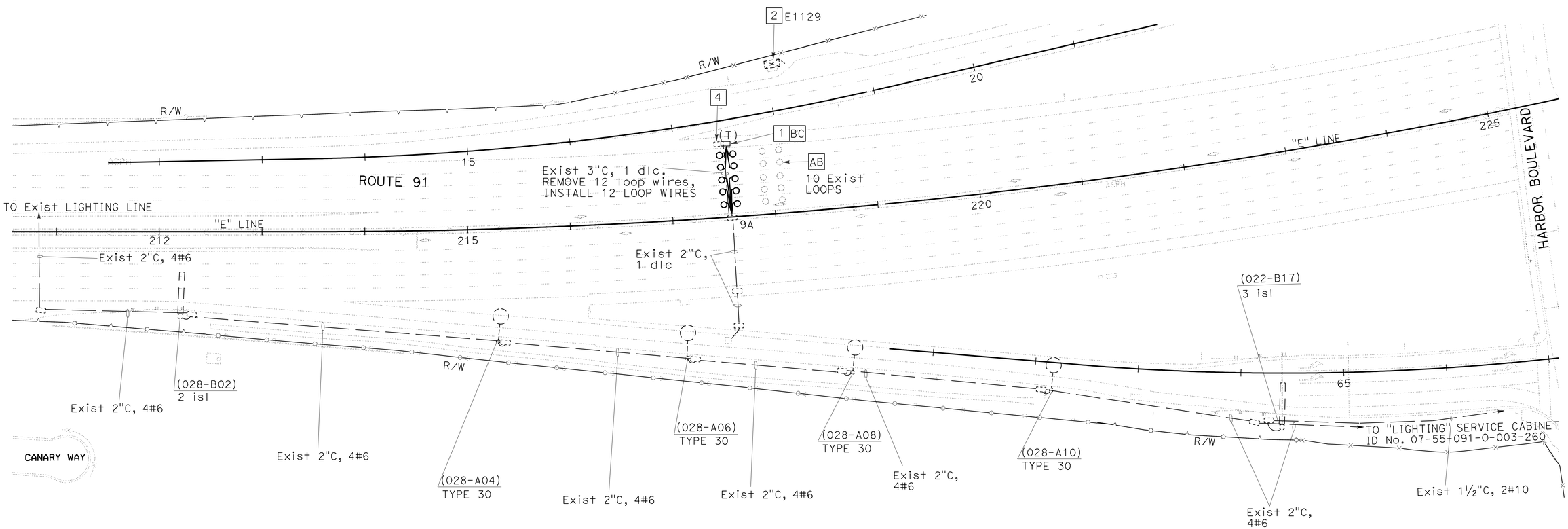


# INDUCTIVE LOOP DETECTOR

SCALE: 1" = 50'

THIS PLAN IS ACCURATE FOR ELECTRICAL WORK ONLY.

E-14

STATE OF CALIFORNIA - DEPARTMENT OF TRANSPORTATION
Caltrans® ELECTRICAL DESIGN

FUNCTIONAL SUPERVISOR: SHAHRAM SHAHRIARI
CALCULATED-DESIGNED BY: JOANNE VO
CHECKED BY: VANESSA TRUONG
REVISED BY
DATE REVISED

LAST REVISION 03-01-11
DATE PLOTTED => 22-JUN-2011
TIME PLOTTED => 10:16

| Dist | COUNTY | LOCATION CODE | POST MILES TOTAL PROJECT | SHEET No. | TOTAL SHEETS |
|---|---|---|---|---|---|
| 12 | Ora | 91 | R0.0/R10.1 | 240 | 294 |

REGISTERED ELEC. ENGINEER 04/28/11 DATE

6-20-11
PLANS APPROVAL DATE

REGISTERED PROFESSIONAL ENGINEER JOANNE VO No. E 16748 Exp 9/30/12 ELECTRICAL STATE OF CALIFORNIA

*THE STATE OF CALIFORNIA OR ITS OFFICERS OR AGENTS SHALL NOT BE RESPONSIBLE FOR THE ACCURACY OR COMPLETENESS OF SCANNED COPIES OF THIS PLAN SHEET.*

FOR COMPLETE RIGHT OF WAY AND ACCURATE ACCESS DATA,
SEE RIGHT OF RECORD MAPS AT DISTRICT OFFICE.

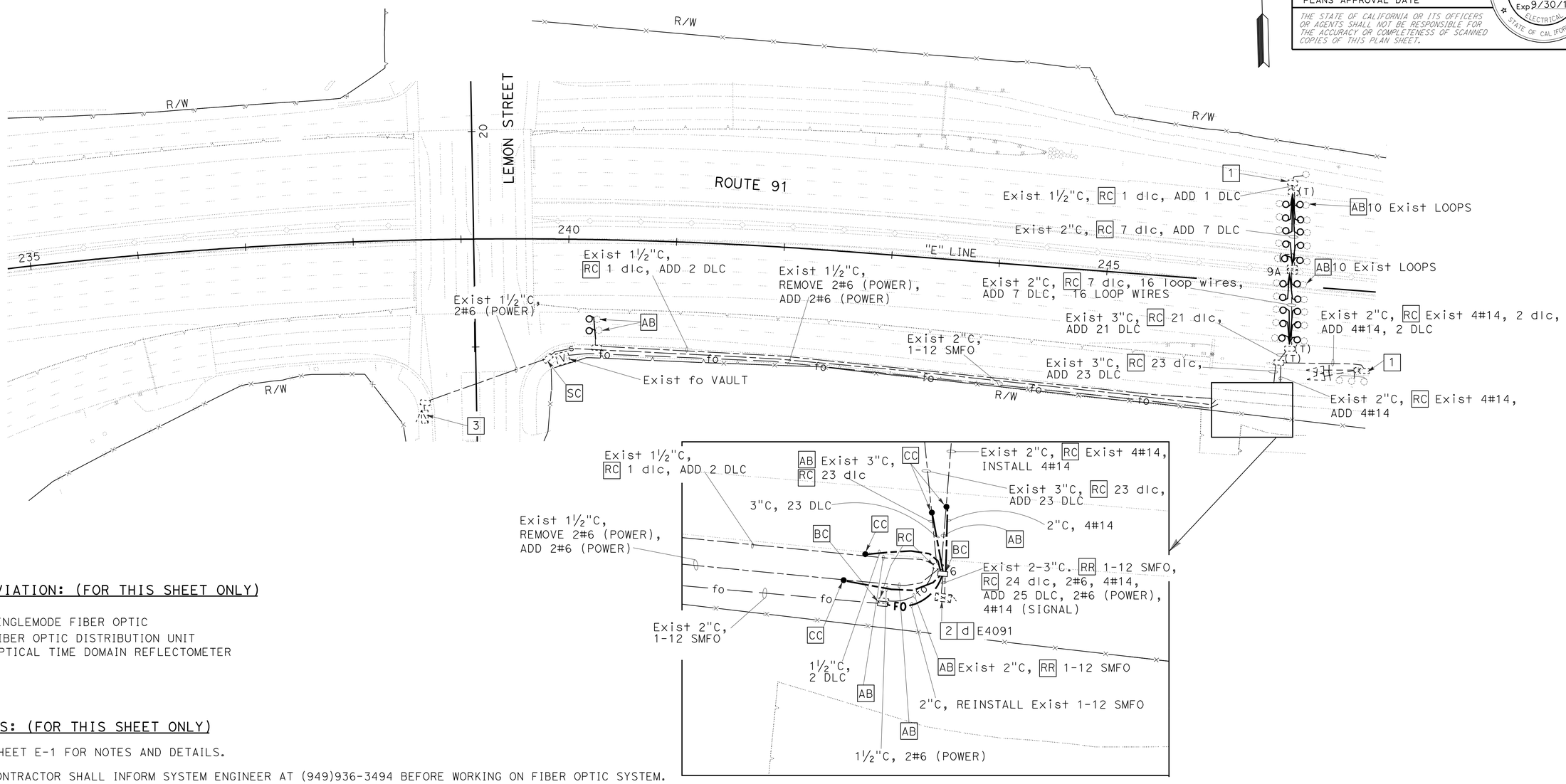


## ABBREVIATION: (FOR THIS SHEET ONLY)

SMFO: SINGLEMODE FIBER OPTIC
FDU: FIBER OPTIC DISTRIBUTION UNIT
OTDR: OPTICAL TIME DOMAIN REFLECTOMETER

## NOTES: (FOR THIS SHEET ONLY)

a. SEE SHEET E-1 FOR NOTES AND DETAILS.

b. THE CONTRACTOR SHALL INFORM SYSTEM ENGINEER AT (949)936-3494 BEFORE WORKING ON FIBER OPTIC SYSTEM.

c. EXISTING FO CABLES SHALL BE CUT ONLY AT EXISTING FDU INSIDE THE CONTROLLER CABINET.

d. THE CONTRACTOR SHALL REINSTALL EXISTING 1-12 SMFO CABLES IN EXISTING FDU.
THE CONTRACTOR SHALL PERFORM THE POWER METER AND OTDR TEST BIDIRECTIONAL FROM THIS CONTROLLER CABINET TO TWO ADJACENT CONTROLLER CABINETS:
- CONTROLLER CABINET RMS E1129 AT HARBOR Blvd WB ON-RAMP TO Rte 91 (SEE SHEET E-14 FOR REFERENCE).
- CONTROLLER CABINET RMS E1127 AT RAYMOND Ave (EAST St) WB ON-RAMP TO Rte 91 (SEE SHEET E-17 FOR REFERENCE).

# INDUCTIVE LOOP DETECTOR
## (MODIFY FIBER OPTIC SYSTEM)

SCALE: 1" = 50'

**E-15**

THIS PLAN IS ACCURATE FOR ELECTRICAL WORK ONLY.

STATE OF CALIFORNIA - DEPARTMENT OF TRANSPORTATION
Caltrans® ELECTRICAL DESIGN

FUNCTIONAL SUPERVISOR: SHAHRAM SHAHRIARI
CALCULATED-DESIGNED BY: JOANNE VO
CHECKED BY: VANESSA TRUONG
REVISED BY / DATE REVISED

LAST REVISION 03-01-11 | DATE PLOTTED => 22-JUN-2011 | TIME PLOTTED => 12:47

| Dist | COUNTY | LOCATION CODE | POST MILES TOTAL PROJECT | SHEET No. | TOTAL SHEETS |
|---|---|---|---|---|---|
| 12 | Ora | 91 | R0.0/R10.1 | 241 | 294 |

RE GISTERED ELEC. ENGINEER 04/28/11 DATE

6-20-11
PLANS APPROVAL DATE

REGISTERED PROFESSIONAL ENGINEER
JOANNE VO
No. E 16748
Exp 9/30/12
ELECTRICAL
STATE OF CALIFORNIA

*THE STATE OF CALIFORNIA OR ITS OFFICERS OR AGENTS SHALL NOT BE RESPONSIBLE FOR THE ACCURACY OR COMPLETENESS OF SCANNED COPIES OF THIS PLAN SHEET.*

FOR COMPLETE RIGHT OF WAY AND ACCURATE ACCESS DATA,
SEE RIGHT OF RECORD MAPS AT DISTRICT OFFICE.

NOTE: (FOR THIS SHEET ONLY)

a. SEE SHEET E-1 FOR NOTES AND DETAILS.

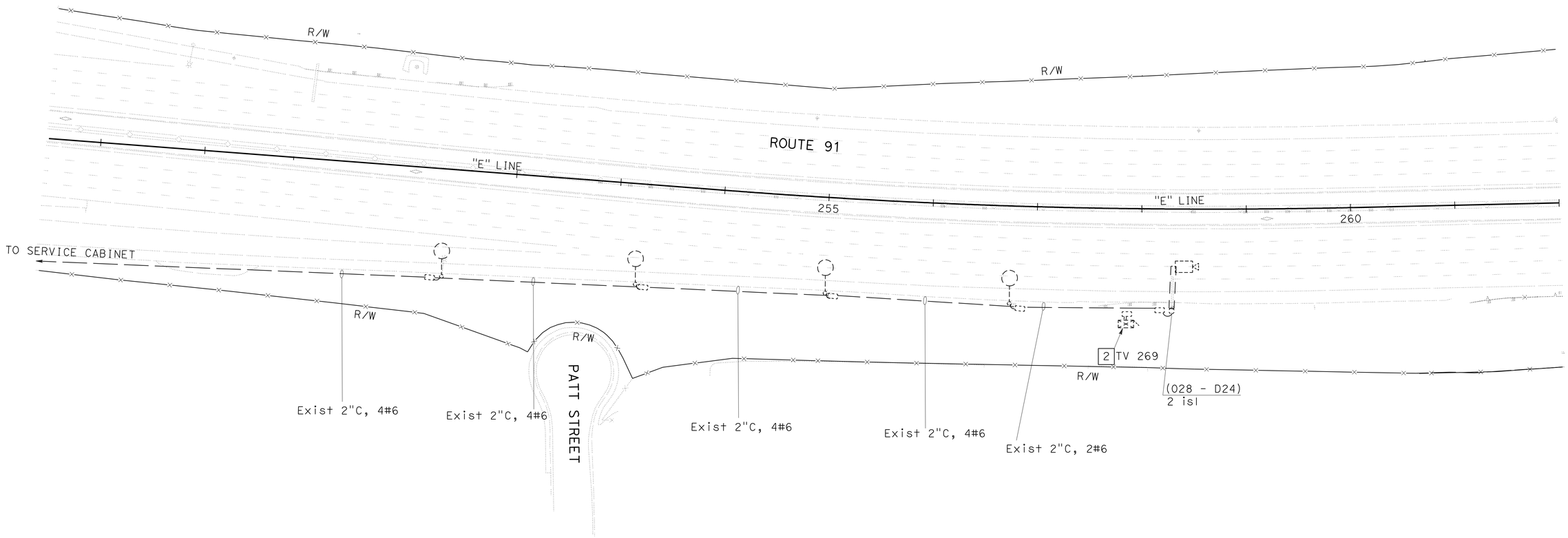


# INDUCTIVE LOOP DETECTOR (FOR INFORMATION ONLY)

SCALE: 1" = 50'

E-16

THIS PLAN IS ACCURATE FOR ELECTRICAL WORK ONLY.

STATE OF CALIFORNIA - DEPARTMENT OF TRANSPORTATION
Caltrans® ELECTRICAL DESIGN

FUNCTIONAL SUPERVISOR: SHAHRAM SHAHRIARI
CALCULATED-DESIGNED BY: JOANNE VO
CHECKED BY: VANESSA TRUONG
REVISED BY
DATE REVISED

LAST REVISION 03-01-11
DATE PLOTTED => 21-JUN-2011
TIME PLOTTED => 08:52

| Dist | COUNTY | LOCATION CODE | POST MILES TOTAL PROJECT | SHEET No. | TOTAL SHEETS |
|---|---|---|---|---|---|
| 12 | Ora | 91 | R0.0/R10.1 | 242 | 294 |

REGISTERED ELEC. ENGINEER 04/28/11 DATE

6-20-11
PLANS APPROVAL DATE

REGISTERED PROFESSIONAL ENGINEER JOANNE VO No. E 16748 Exp 9/30/12 ELECTRICAL STATE OF CALIFORNIA

*THE STATE OF CALIFORNIA OR ITS OFFICERS OR AGENTS SHALL NOT BE RESPONSIBLE FOR THE ACCURACY OR COMPLETENESS OF SCANNED COPIES OF THIS PLAN SHEET.*

FOR COMPLETE RIGHT OF WAY AND ACCURATE ACCESS DATA,
SEE RIGHT OF RECORD MAPS AT DISTRICT OFFICE.

NOTE: (FOR THIS SHEET ONLY)

a. SEE SHEET E-1 FOR NOTES AND DETAILS.

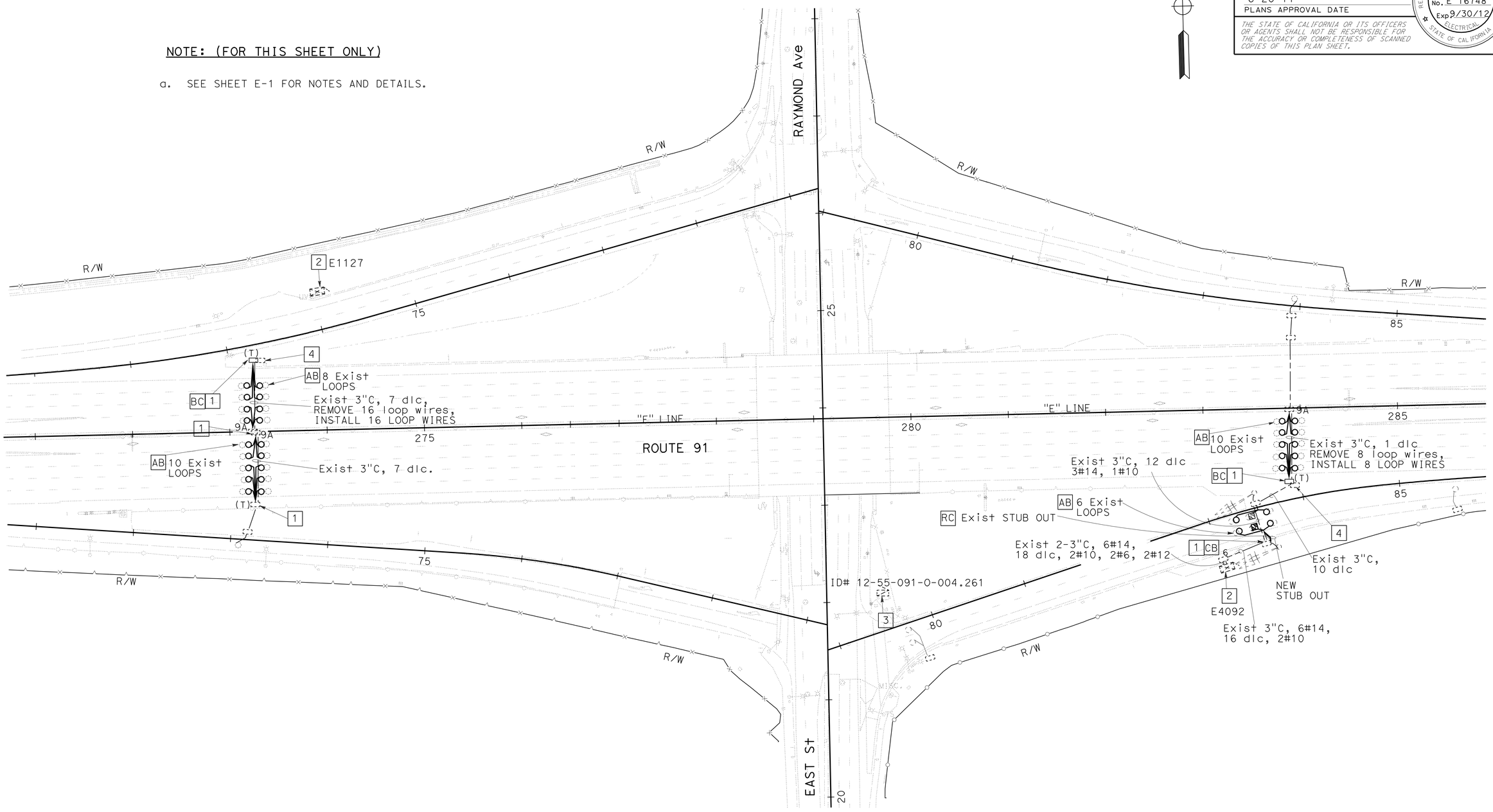


# INDUCTIVE LOOP DETECTOR

SCALE: 1" = 50'

**E-17**

THIS PLAN IS ACCURATE FOR ELECTRICAL WORK ONLY.

STATE OF CALIFORNIA - DEPARTMENT OF TRANSPORTATION
Caltrans® ELECTRICAL DESIGN

FUNCTIONAL SUPERVISOR: SHAHRAM SHAHRIARI
CALCULATED-DESIGNED BY: JOANNE VO
CHECKED BY: VANESSA TRUONG
REVISED BY
DATE REVISED

LAST REVISION 03-01-11 | DATE PLOTTED => 22-JUN-2011 | TIME PLOTTED => 10:16

| Dist | COUNTY | LOCATION CODE | POST MILES TOTAL PROJECT | SHEET No. | TOTAL SHEETS |
|---|---|---|---|---|---|
| 12 | Ora | 91 | R0.0/R10.1 | 243 | 294 |

REGISTERED ELEC. ENGINEER 04/28/11 DATE

6-20-11
PLANS APPROVAL DATE

REGISTERED PROFESSIONAL ENGINEER JOANNE VO No. E 16748 Exp 9/30/12 ELECTRICAL STATE OF CALIFORNIA

*THE STATE OF CALIFORNIA OR ITS OFFICERS OR AGENTS SHALL NOT BE RESPONSIBLE FOR THE ACCURACY OR COMPLETENESS OF SCANNED COPIES OF THIS PLAN SHEET.*

FOR COMPLETE RIGHT OF WAY AND ACCURATE ACCESS DATA, SEE RIGHT OF RECORD MAPS AT DISTRICT OFFICE.

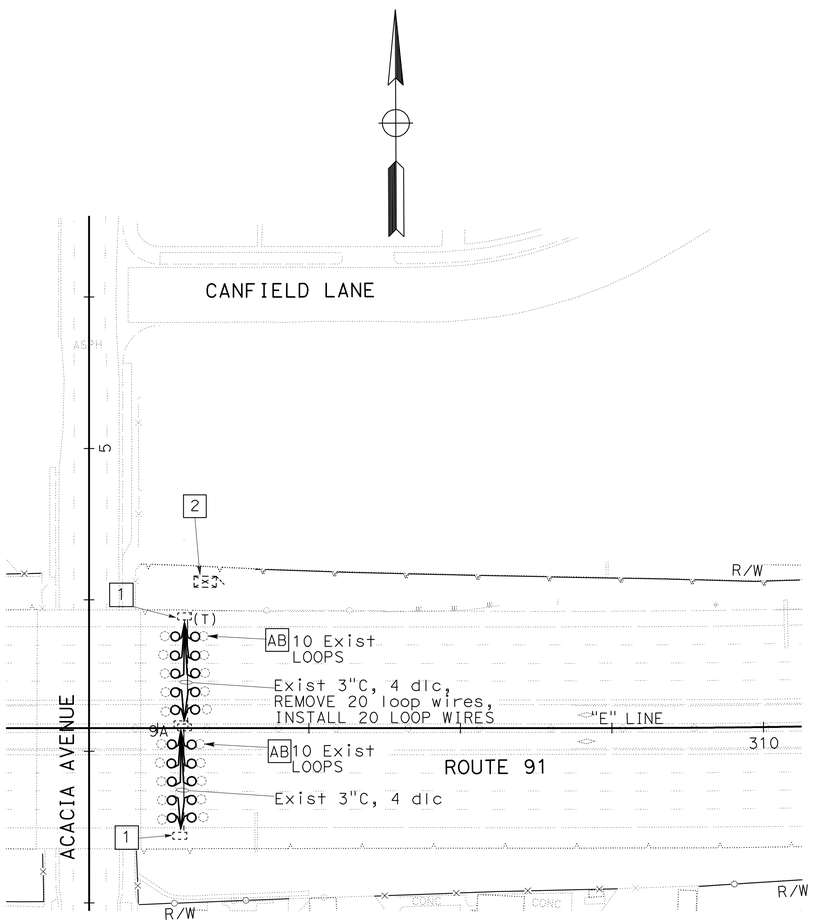


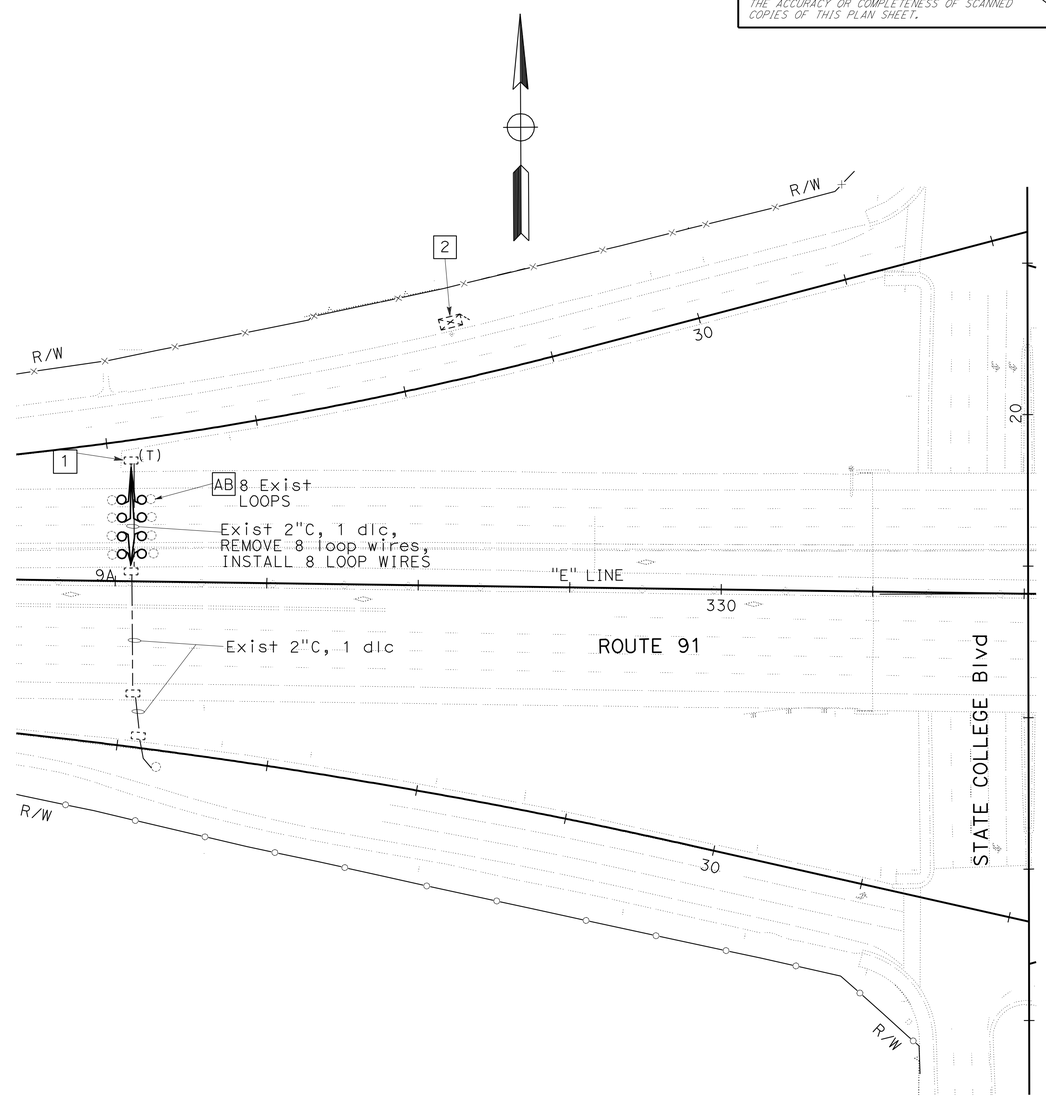


NOTES: (FOR THIS SHEET ONLY)

a. SEE SHEET E-1 FOR NOTES AND DETAILS.

# INDUCTIVE LOOP DETECTOR

SCALE: 1" = 50'

THIS PLAN IS ACCURATE FOR ELECTRICAL WORK ONLY.

E-18

STATE OF CALIFORNIA - DEPARTMENT OF TRANSPORTATION
Caltrans® ELECTRICAL DESIGN

FUNCTIONAL SUPERVISOR: SHAHRAM SHAHRIARI
CALCULATED-DESIGNED BY: JOANNE VO
CHECKED BY: VANESSA TRUONG
REVISED BY
DATE REVISED

LAST REVISION 03-01-11
DATE PLOTTED => 22-JUN-2011
TIME PLOTTED => 10:16

| Dist | COUNTY | LOCATION CODE | POST MILES TOTAL PROJECT | SHEET No. | TOTAL SHEETS |
|---|---|---|---|---|---|
| 12 | Ora | 91 | R0.0/R10.1 | 244 | 294 |

REGISTERED ELEC. ENGINEER DATE 04/28/11

6-20-11
PLANS APPROVAL DATE

REGISTERED PROFESSIONAL ENGINEER JOANNE VO No. E 16748 Exp 9/30/12 ELECTRICAL STATE OF CALIFORNIA

*THE STATE OF CALIFORNIA OR ITS OFFICERS OR AGENTS SHALL NOT BE RESPONSIBLE FOR THE ACCURACY OR COMPLETENESS OF SCANNED COPIES OF THIS PLAN SHEET.*

FOR COMPLETE RIGHT OF WAY AND ACCURATE ACCESS DATA,
SEE RIGHT OF RECORD MAPS AT DISTRICT OFFICE.

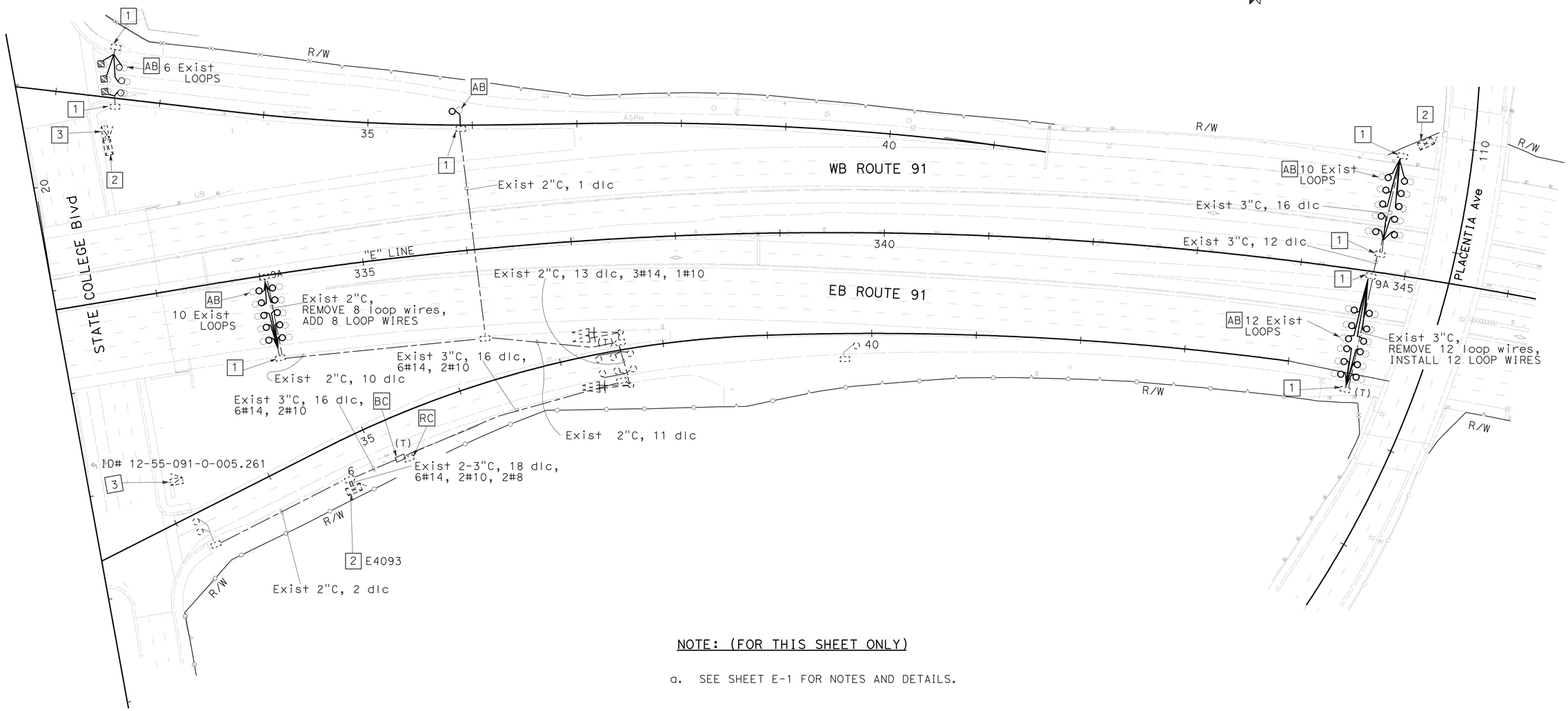


NOTE: (FOR THIS SHEET ONLY)

a. SEE SHEET E-1 FOR NOTES AND DETAILS.

# INDUCTIVE LOOP DETECTOR

SCALE: 1" = 50'

E-19

THIS PLAN IS ACCURATE FOR ELECTRICAL WORK ONLY.

STATE OF CALIFORNIA - DEPARTMENT OF TRANSPORTATION
Caltrans
ELECTRICAL DESIGN

FUNCTIONAL SUPERVISOR: SHAHRAM SHAHRIARI
CALCULATED-DESIGNED BY: JOANNE VO
CHECKED BY: VANESSA TRUONG
REVISED BY
DATE REVISED

LAST REVISION 03-01-11
DATE PLOTTED => 22-JUN-2011
TIME PLOTTED => 10:07

| Dist | COUNTY | LOCATION CODE | POST MILES TOTAL PROJECT | SHEET No. | TOTAL SHEETS |
|---|---|---|---|---|---|
| 12 | Ora | 91 | R0.0/R10.1 | 245 | 294 |

REGISTERED ELEC. ENGINEER DATE 04/28/11

6-20-11
PLANS APPROVAL DATE

REGISTERED PROFESSIONAL ENGINEER
JOANNE VO
No. E 16748
Exp 9/30/12
ELECTRICAL
STATE OF CALIFORNIA

*THE STATE OF CALIFORNIA OR ITS OFFICERS OR AGENTS SHALL NOT BE RESPONSIBLE FOR THE ACCURACY OR COMPLETENESS OF SCANNED COPIES OF THIS PLAN SHEET.*

FOR COMPLETE RIGHT OF WAY AND ACCURATE ACCESS DATA,
SEE RIGHT OF RECORD MAPS AT DISTRICT OFFICE.

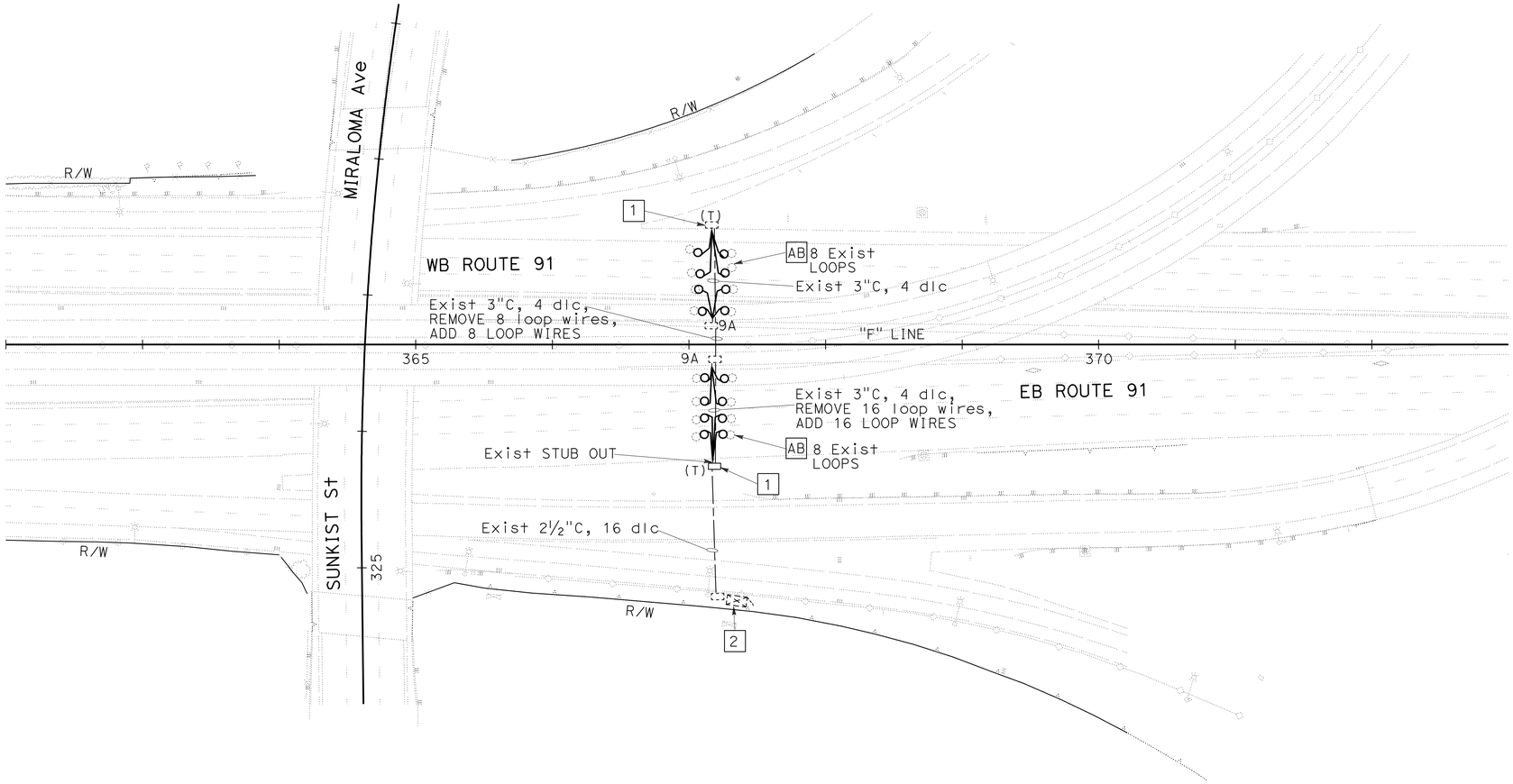


NOTE: (FOR THIS SHEET ONLY)

a. SEE SHEET E-1 FOR NOTES AND DETAILS.

# INDUCTIVE LOOP DETECTOR

SCALE: 1" = 50'

THIS PLAN IS ACCURATE FOR ELECTRICAL WORK ONLY.

E-20

| REVISED BY | DATE REVISED |
|---|---|
| | |

CALCULATED-DESIGNED BY: JOANNE VO
CHECKED BY: VANESSA TRUONG
FUNCTIONAL SUPERVISOR: SHAHRAM SHAHRIARI

STATE OF CALIFORNIA - DEPARTMENT OF TRANSPORTATION
Caltrans® ELECTRICAL DESIGN

LAST REVISION 03-01-11 | DATE PLOTTED => 22-JUN-2011 | TIME PLOTTED => 10:08

| Dist | COUNTY | LOCATION CODE | POST MILES TOTAL PROJECT | SHEET No. | TOTAL SHEETS |
|---|---|---|---|---|---|
| 12 | Ora | 91 | R0.0/R10.1 | 246 | 294 |

REGISTERED ELEC. ENGINEER 04/28/11 DATE

6-20-11
PLANS APPROVAL DATE

REGISTERED PROFESSIONAL ENGINEER JOANNE VO No. E 16748 Exp 9/30/12 ELECTRICAL STATE OF CALIFORNIA

*THE STATE OF CALIFORNIA OR ITS OFFICERS OR AGENTS SHALL NOT BE RESPONSIBLE FOR THE ACCURACY OR COMPLETENESS OF SCANNED COPIES OF THIS PLAN SHEET.*

FOR COMPLETE RIGHT OF WAY AND ACCURATE ACCESS DATA,
SEE RIGHT OF RECORD MAPS AT DISTRICT OFFICE.

NOTE: (FOR THIS SHEET ONLY)

a. SEE SHEET E-1 FOR NOTES AND DETAILS.

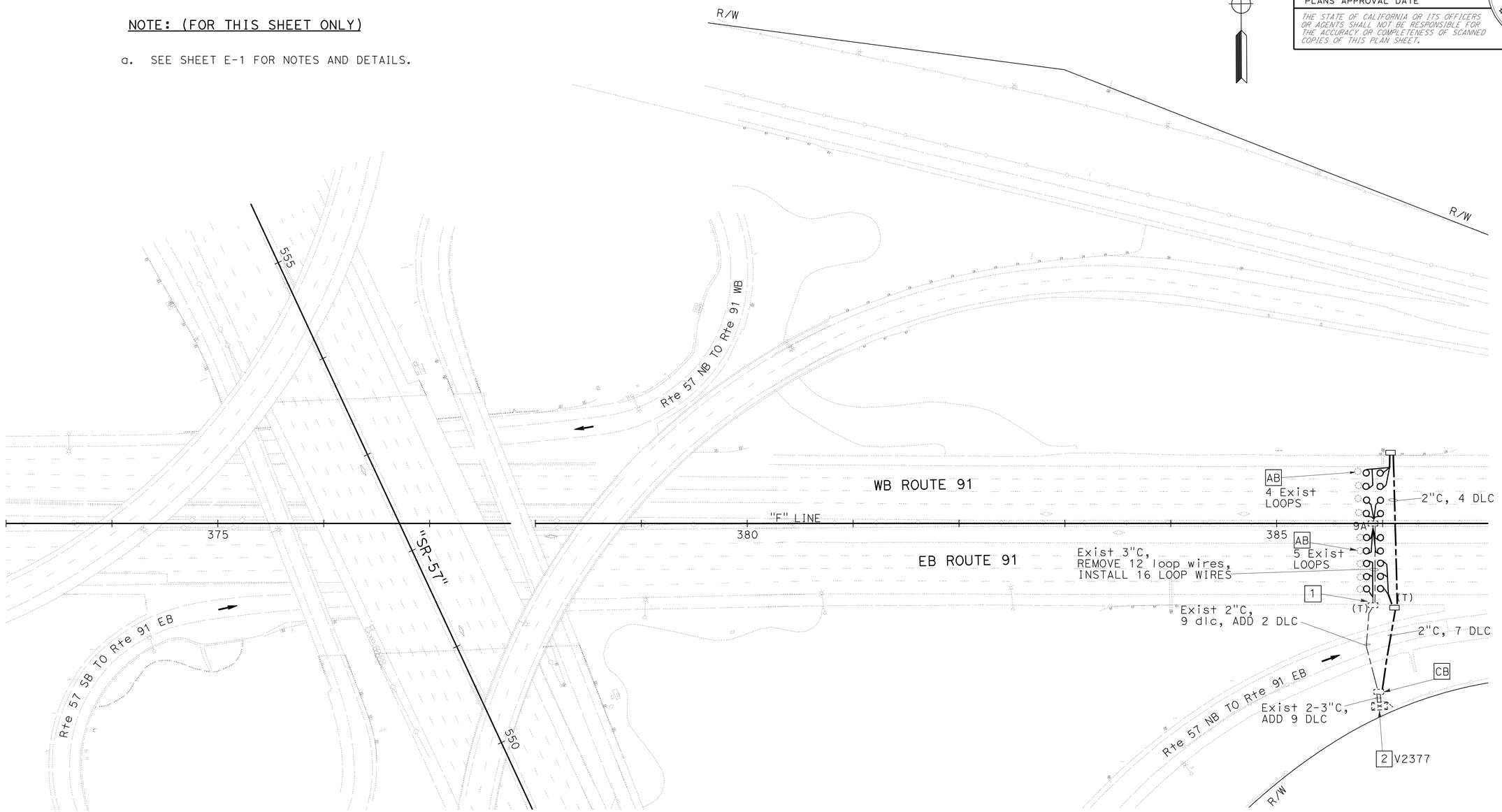


# INDUCTIVE LOOP DETECTOR

SCALE: 1" = 50'

THIS PLAN IS ACCURATE FOR ELECTRICAL WORK ONLY.

E-21

STATE OF CALIFORNIA - DEPARTMENT OF TRANSPORTATION
Caltrans ELECTRICAL DESIGN

FUNCTIONAL SUPERVISOR: SHAHRAM SHAHRIARI
CALCULATED-DESIGNED BY: JOANNE VO
CHECKED BY: VANESSA TRUONG
REVISED BY
DATE REVISED

LAST REVISION 03-01-11
DATE PLOTTED => 22-JUN-2011
TIME PLOTTED => 10:08

| Dist | COUNTY | ROUTE | POST MILES TOTAL PROJECT | SHEET No. | TOTAL SHEETS |
|---|---|---|---|---|---|
| 12 | Ora | 91 | R0.0/R10.1 | 247 | 294 |

REGISTERED ELECTRICAL ENGINEER 04/28/11 DATE

6-20-11
PLANS APPROVAL DATE

REGISTERED PROFESSIONAL ENGINEER
JOANNE VO
No. E 16748
Exp 9/30/12
ELECTRICAL
STATE OF CALIFORNIA

*THE STATE OF CALIFORNIA OR ITS OFFICERS OR AGENTS SHALL NOT BE RESPONSIBLE FOR THE ACCURACY OR COMPLETENESS OF SCANNED COPIES OF THIS PLAN SHEET.*

FOR COMPLETE RIGHT OF WAY AND ACCURATE ACCESS DATA,
SEE RIGHT OF RECORD MAPS AT DISTRICT OFFICE.

NOTE: (FOR THIS SHEET ONLY)

a. SEE SHEET E-1 FOR NOTES AND DETAILS.

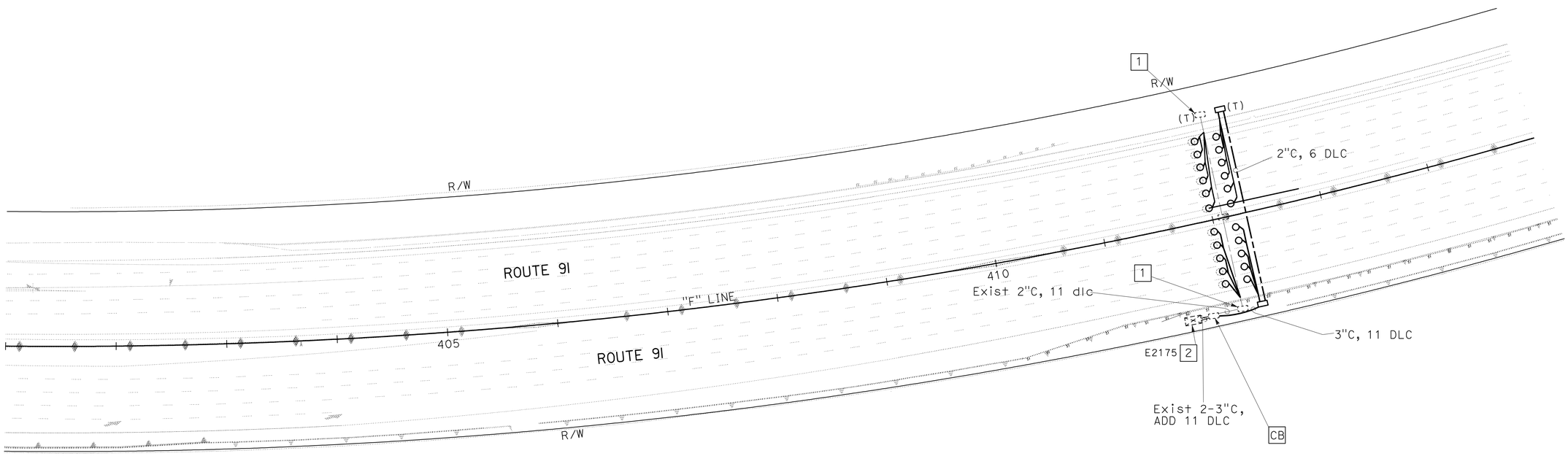


# INDUCTIVE LOOP DETECTOR

SCALE: 1" = 50'

THIS PLAN IS ACCURATE FOR ELECTRICAL WORK ONLY.

E-22

| REVISED BY | DATE REVISED |
|---|---|
| JOANNE VO | VANESSA TRUONG |

| CALCULATED-DESIGNED BY | CHECKED BY |
|---|---|
| FUNCTIONAL SUPERVISOR | SHAHRAM SHAHRIARI |

STATE OF CALIFORNIA - DEPARTMENT OF TRANSPORTATION
Caltrans® ELECTRICAL DESIGN

LAST REVISION 03-01-11 DATE PLOTTED => 21-JUN-2011 TIME PLOTTED => 08:52

| Dist | COUNTY | ROUTE | POST MILES TOTAL PROJECT | SHEET No. | TOTAL SHEETS |
|---|---|---|---|---|---|
| 12 | Ora | 91 | R0.0/R10.1 | 248 | 294 |

REGISTERED ELECTRICAL ENGINEER 04/28/11 DATE

6-20-11
PLANS APPROVAL DATE

REGISTERED PROFESSIONAL ENGINEER
JOANNE VO
No. E 16748
Exp 9/30/12
ELECTRICAL
STATE OF CALIFORNIA

*THE STATE OF CALIFORNIA OR ITS OFFICERS OR AGENTS SHALL NOT BE RESPONSIBLE FOR THE ACCURACY OR COMPLETENESS OF SCANNED COPIES OF THIS PLAN SHEET.*

FOR COMPLETE RIGHT OF WAY AND ACCURATE ACCESS DATA,
SEE RIGHT OF RECORD MAPS AT DISTRICT OFFICE.

NOTE: (FOR THIS SHEET ONLY)

a. SEE SHEET E-1 FOR NOTES AND DETAILS.

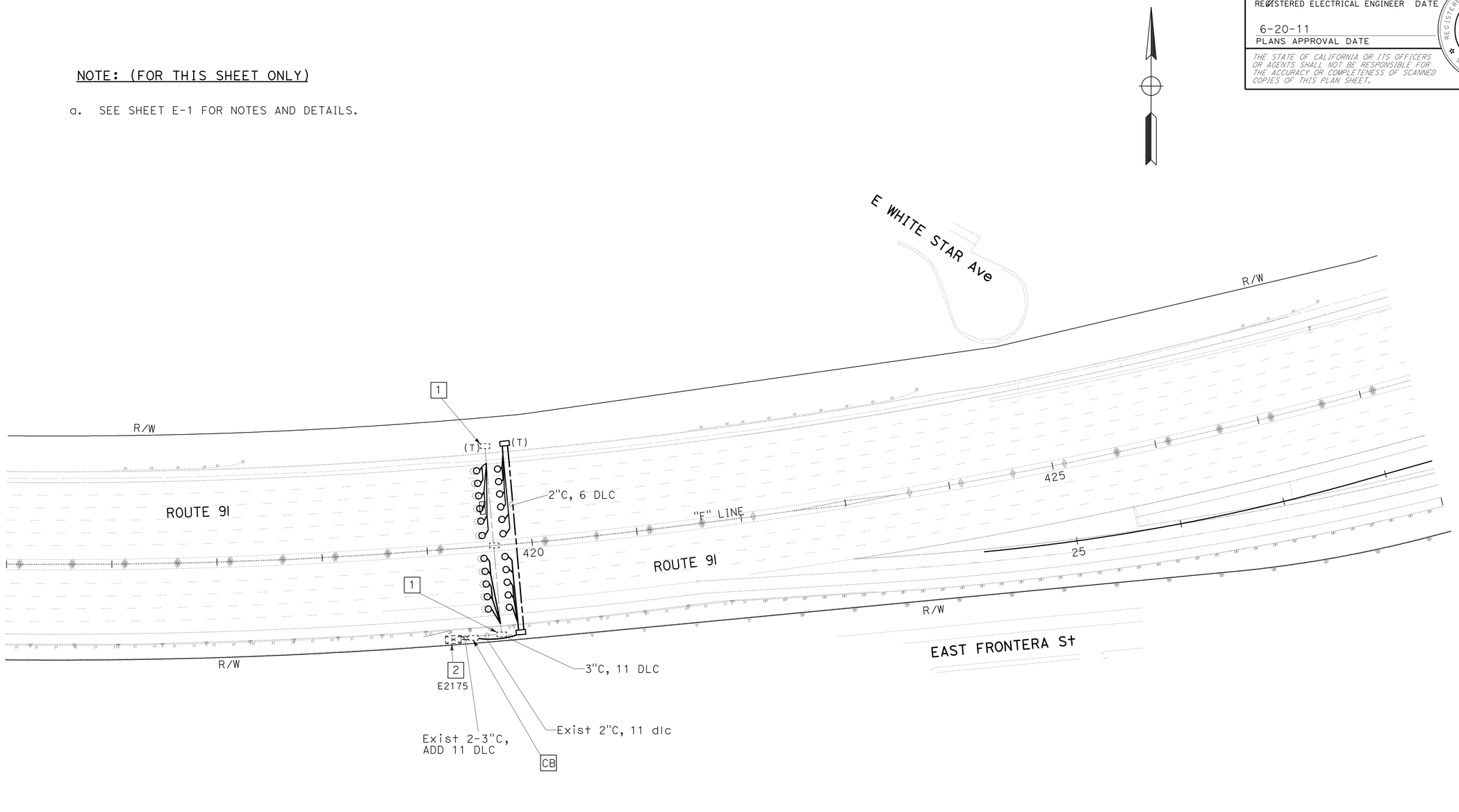


# INDUCTIVE LOOP DETECTOR

SCALE: 1" = 50'

**E-23**

THIS PLAN IS ACCURATE FOR ELECTRICAL WORK ONLY.

STATE OF CALIFORNIA - DEPARTMENT OF TRANSPORTATION
Caltrans® ELECTRICAL DESIGN

CALCULATED-DESIGNED BY: JOANNE VO
CHECKED BY: VANESSA TRUONG
REVISED BY
DATE REVISED

FUNCTIONAL SUPERVISOR: SHAHRAM SHAHRIARI

LAST REVISION 03-01-11
DATE PLOTTED => 21-JUN-2011
TIME PLOTTED => 08:52

| Dist | COUNTY | LOCATION CODE | POST MILES TOTAL PROJECT | SHEET No. | TOTAL SHEETS |
|---|---|---|---|---|---|
| 12 | Ora | 91 | R0.0/R10.1 | 249 | 294 |

REGISTERED ELEC. ENGINEER 04/28/11 DATE

6-20-11
PLANS APPROVAL DATE

REGISTERED PROFESSIONAL ENGINEER JOANNE VO No. E 16748 Exp 9/30/12 ELECTRICAL STATE OF CALIFORNIA

*THE STATE OF CALIFORNIA OR ITS OFFICERS OR AGENTS SHALL NOT BE RESPONSIBLE FOR THE ACCURACY OR COMPLETENESS OF SCANNED COPIES OF THIS PLAN SHEET.*

FOR COMPLETE RIGHT OF WAY AND ACCURATE ACCESS DATA,
SEE RIGHT OF RECORD MAPS AT DISTRICT OFFICE.

NOTE: (FOR THIS SHEET ONLY)

a. SEE SHEET E-1 FOR NOTES AND DETAILS.

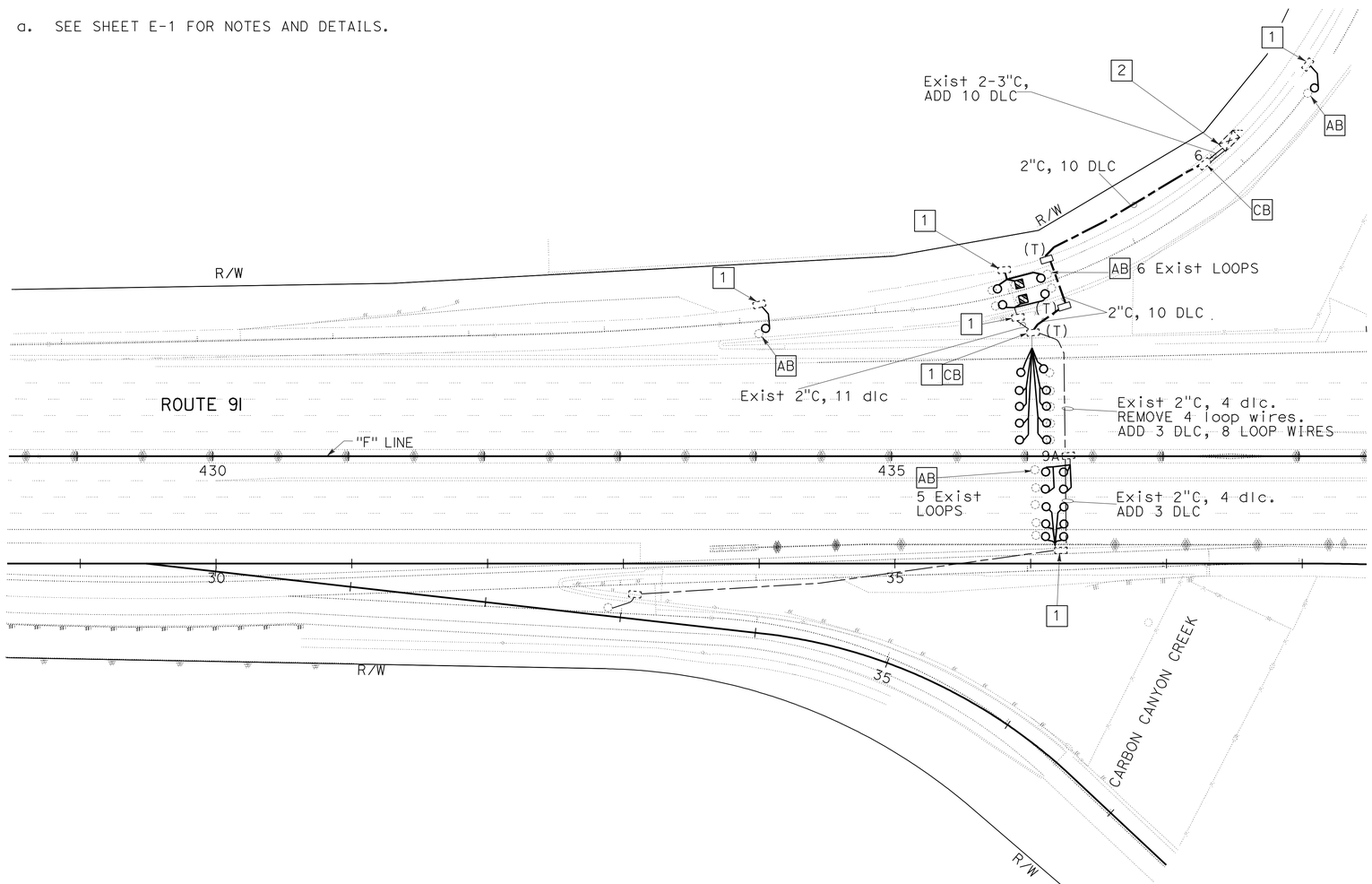


# INDUCTIVE LOOP DETECTOR

SCALE: 1" = 50'

**E-24**

THIS PLAN IS ACCURATE FOR ELECTRICAL WORK ONLY.

STATE OF CALIFORNIA - DEPARTMENT OF TRANSPORTATION
Caltrans® ELECTRICAL DESIGN

FUNCTIONAL SUPERVISOR: SHAHRAM SHAHRIARI
CALCULATED-DESIGNED BY: JOANNE VO
CHECKED BY: VANESSA TRUONG
REVISED BY
DATE REVISED

LAST REVISION 03-01-11
DATE PLOTTED => 21-JUN-2011
TIME PLOTTED => 08:52

FOR COMPLETE RIGHT OF WAY AND ACCURATE ACCESS DATA,
SEE RIGHT OF RECORD MAPS AT DISTRICT OFFICE.

| Dist | COUNTY | ROUTE | POST MILES TOTAL PROJECT | SHEET No. | TOTAL SHEETS |
|---|---|---|---|---|---|
| 12 | Ora | 91 | R0.0/R10.1 | 250 | 294 |

REGISTERED ELECTRICAL ENGINEER 04/28/11 DATE

6-20-11
PLANS APPROVAL DATE

REGISTERED PROFESSIONAL ENGINEER
JOANNE VO
No. E 16748
Exp. 9/30/12
ELECTRICAL
STATE OF CALIFORNIA

*THE STATE OF CALIFORNIA OR ITS OFFICERS OR AGENTS SHALL NOT BE RESPONSIBLE FOR THE ACCURACY OR COMPLETENESS OF SCANNED COPIES OF THIS PLAN SHEET.*

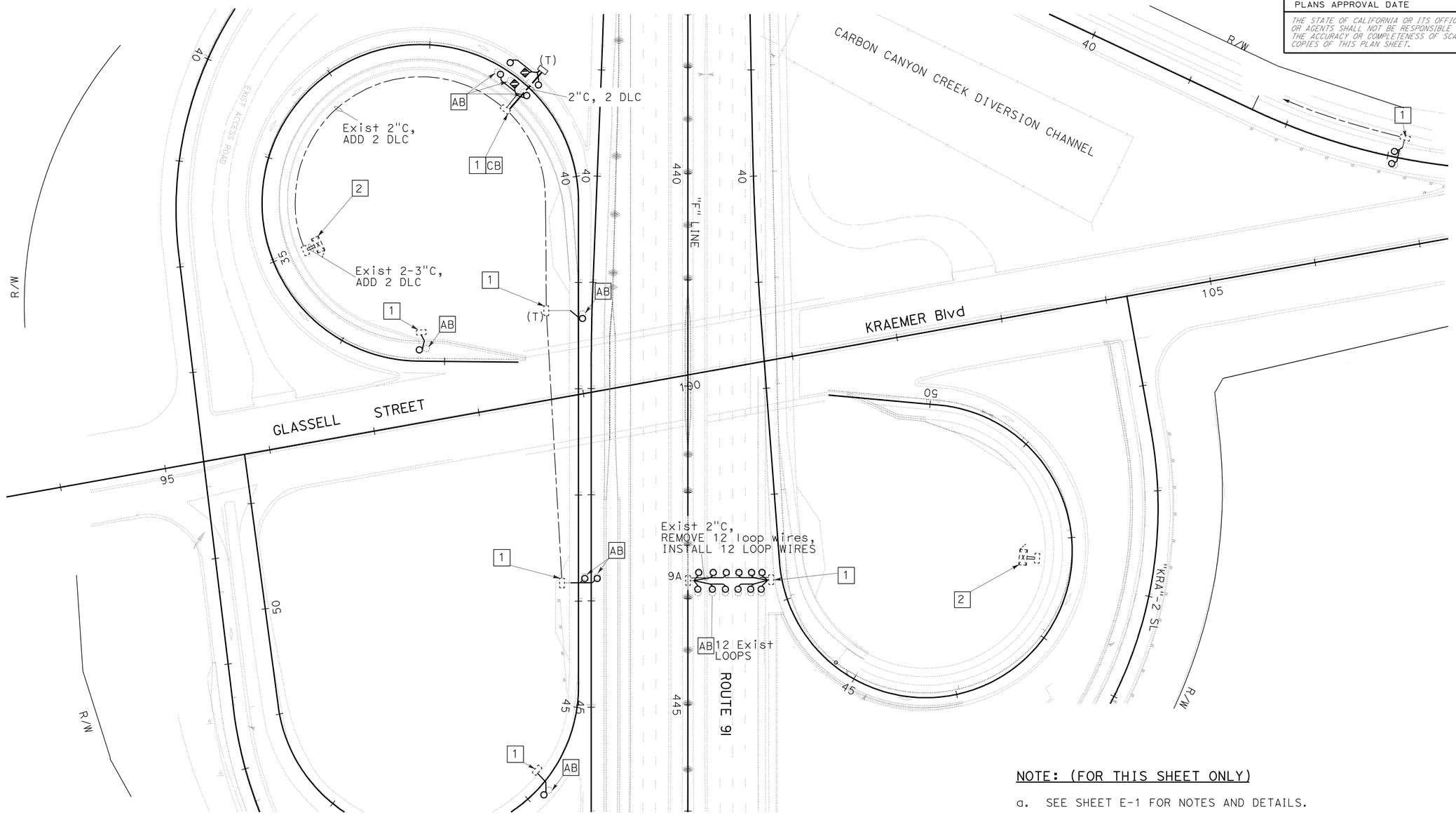


NOTE: (FOR THIS SHEET ONLY)

a. SEE SHEET E-1 FOR NOTES AND DETAILS.

# INDUCTIVE LOOP DETECTOR

SCALE: 1" = 50'

E-25

THIS PLAN IS ACCURATE FOR ELECTRICAL WORK ONLY.

STATE OF CALIFORNIA - DEPARTMENT OF TRANSPORTATION
Caltrans® ELECTRICAL DESIGN

| REVISED BY | DATE REVISED |
|---|---|
| JOANNE VO | VANESSA TRUONG |

| CALCULATED-DESIGNED BY | CHECKED BY |
|---|---|
| FENGXITONGWALL SSBERWYSOBR | SHAHRAM SHAHRIARI |

LAST REVISION 03-01-11 | DATE PLOTTED => 22-JUN-2011 | TIME PLOTTED => 10:17

FOR COMPLETE RIGHT OF WAY AND ACCURATE ACCESS DATA,
SEE RIGHT OF RECORD MAPS AT DISTRICT OFFICE.

| Dist | COUNTY | ROUTE | POST MILES TOTAL PROJECT | SHEET No. | TOTAL SHEETS |
|---|---|---|---|---|---|
| 12 | Ora | 91 | R0.0/R10.1 | 251 | 294 |

REGISTERED ELECTRICAL ENGINEER 04/28/11 DATE

6-20-11
PLANS APPROVAL DATE

REGISTERED PROFESSIONAL ENGINEER
JOANNE VO
No. E 16748
Exp. 9/30/12
ELECTRICAL
STATE OF CALIFORNIA

*THE STATE OF CALIFORNIA OR ITS OFFICERS OR AGENTS SHALL NOT BE RESPONSIBLE FOR THE ACCURACY OR COMPLETENESS OF SCANNED COPIES OF THIS PLAN SHEET.*

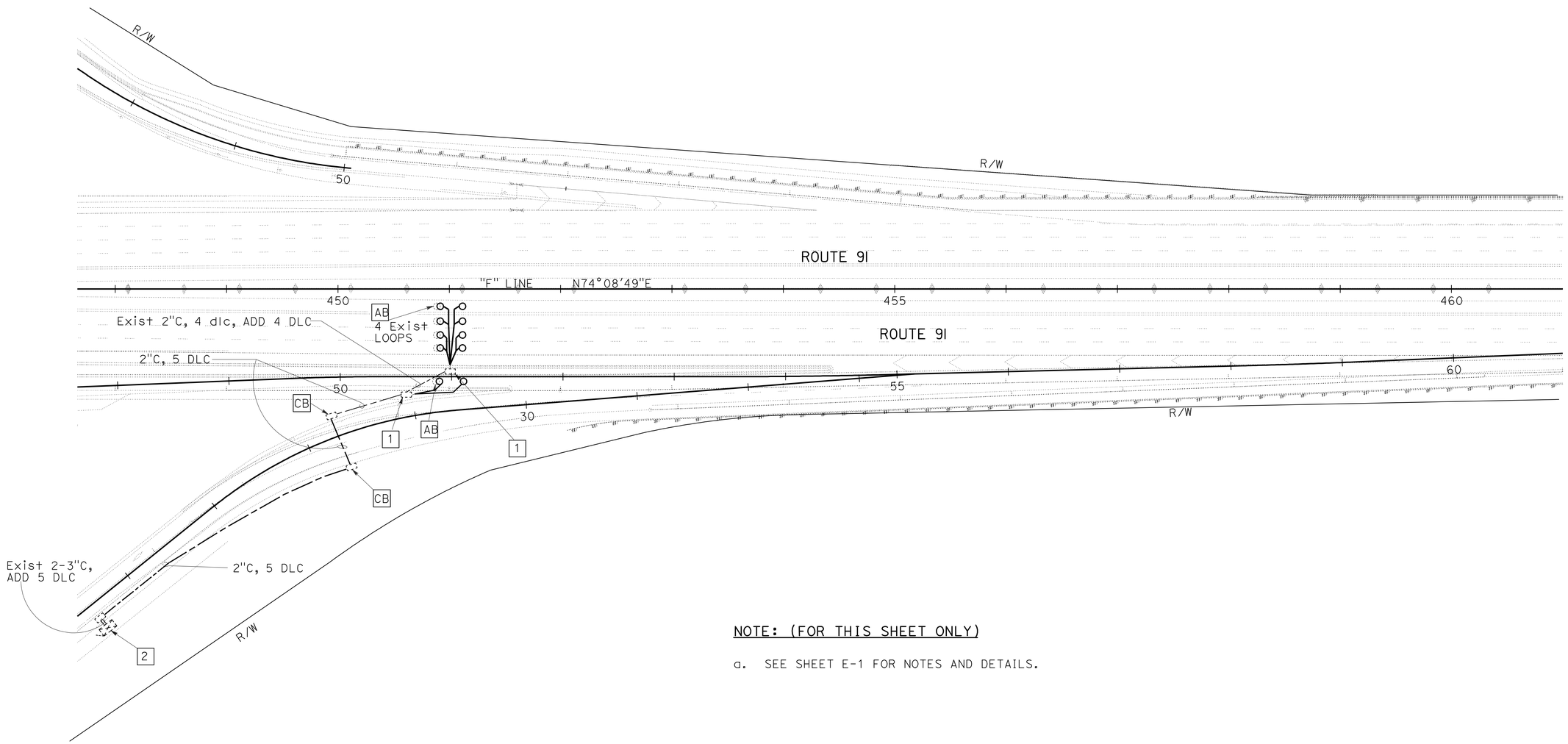


NOTE: (FOR THIS SHEET ONLY)

a. SEE SHEET E-1 FOR NOTES AND DETAILS.

# INDUCTIVE LOOP DETECTOR

SCALE: 1" = 50'

**E-26**

THIS PLAN IS ACCURATE FOR ELECTRICAL WORK ONLY.

STATE OF CALIFORNIA - DEPARTMENT OF TRANSPORTATION
Caltrans® ELECTRICAL DESIGN

FUNCTIONAL SUPERVISOR: SHAHRAM SHAHRIARI
CALCULATED-DESIGNED BY: JOANNE VO
CHECKED BY: VANESSA TRUONG
REVISED BY
DATE REVISED

LAST REVISION 03-01-11
DATE PLOTTED => 22-JUN-2011
TIME PLOTTED => 10:17

| Dist | COUNTY | ROUTE | POST MILES TOTAL PROJECT | SHEET No. | TOTAL SHEETS |
|---|---|---|---|---|---|
| 12 | Ora | 91 | R0.0/R10.1 | 252 | 294 |

REGISTERED ELECTRICAL ENGINEER 04/28/11 DATE

6-20-11
PLANS APPROVAL DATE

REGISTERED PROFESSIONAL ENGINEER
JOANNE VO
No. E 16748
Exp. 9/30/12
ELECTRICAL
STATE OF CALIFORNIA

*THE STATE OF CALIFORNIA OR ITS OFFICERS OR AGENTS SHALL NOT BE RESPONSIBLE FOR THE ACCURACY OR COMPLETENESS OF SCANNED COPIES OF THIS PLAN SHEET.*

FOR COMPLETE RIGHT OF WAY AND ACCURATE ACCESS DATA,
SEE RIGHT OF RECORD MAPS AT DISTRICT OFFICE.

NOTE: (FOR THIS SHEET ONLY)

a. SEE SHEET E-1 FOR NOTES AND DETAILS.

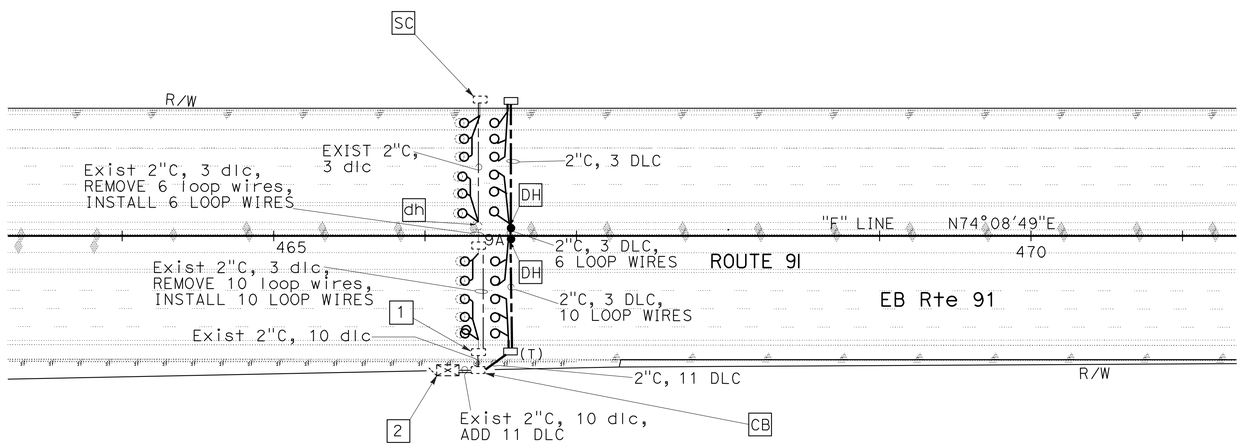


THIS PLAN IS ACCURATE FOR ELECTRICAL WORK ONLY.

# INDUCTIVE LOOP DETECTOR

SCALE: 1" = 50'

**E-27**

STATE OF CALIFORNIA - DEPARTMENT OF TRANSPORTATION
Caltrans® ELECTRICAL DESIGN

CALCULATED-DESIGNED BY: JOANNE VO
CHECKED BY: VANESSA TRUONG
REVISED BY
DATE REVISED
FUNCTIONAL SUPERVISOR: SHAHRAM SHAHRIARI

LAST REVISION 03-01-11
DATE PLOTTED => 22-JUN-2011
TIME PLOTTED => 10:17

| Dist | COUNTY | ROUTE | POST MILES TOTAL PROJECT | SHEET No. | TOTAL SHEETS |
|---|---|---|---|---|---|
| 12 | Ora | 91 | R0.0/R10.1 | 253 | 294 |

REGISTERED ELECTRICAL ENGINEER 04/28/11 DATE

6-20-11
PLANS APPROVAL DATE

REGISTERED PROFESSIONAL ENGINEER
JOANNE VO
No. E 16748
Exp 9/30/12
ELECTRICAL
STATE OF CALIFORNIA

*THE STATE OF CALIFORNIA OR ITS OFFICERS OR AGENTS SHALL NOT BE RESPONSIBLE FOR THE ACCURACY OR COMPLETENESS OF SCANNED COPIES OF THIS PLAN SHEET.*

FOR COMPLETE RIGHT OF WAY AND ACCURATE ACCESS DATA,
SEE RIGHT OF RECORD MAPS AT DISTRICT OFFICE.

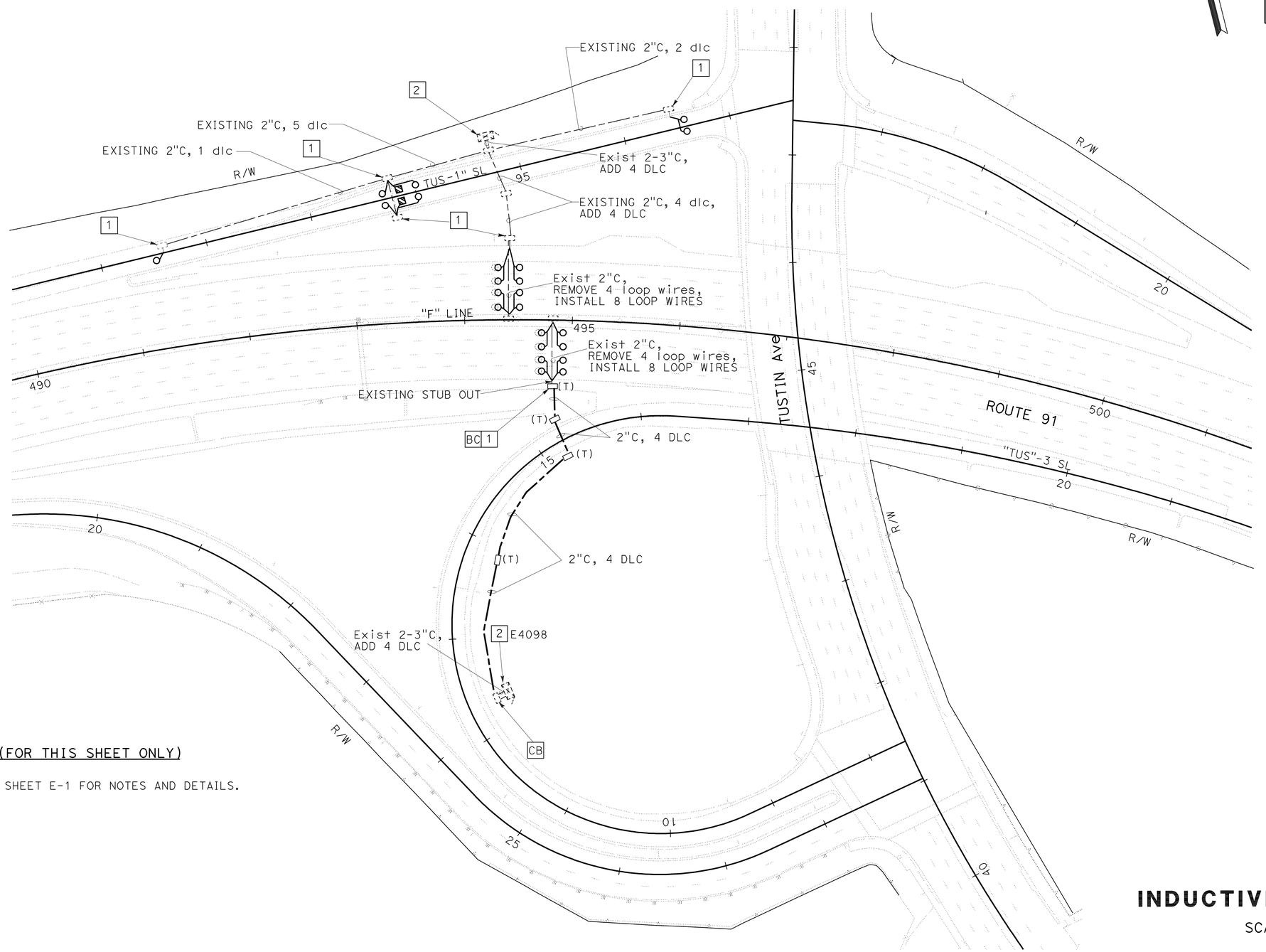


NOTE: (FOR THIS SHEET ONLY)

a. SEE SHEET E-1 FOR NOTES AND DETAILS.

# INDUCTIVE LOOP DETECTOR

SCALE: 1" = 50'

E-28

THIS PLAN IS ACCURATE FOR ELECTRICAL WORK ONLY.

STATE OF CALIFORNIA - DEPARTMENT OF TRANSPORTATION
Caltrans ELECTRICAL DESIGN

FENDOTOWALLSBERWYSOBR
SHAHRAM SHAHRIARI

CALCULATED-DESIGNED BY JOANNE VO
CHECKED BY VANESSA TRUONG
REVISED BY
DATE REVISED

LAST REVISION 03-01-11
DATE PLOTTED => 22-JUN-2011
TIME PLOTTED => 10:17

| Dist | COUNTY | ROUTE | POST MILES TOTAL PROJECT | SHEET No. | TOTAL SHEETS |
|---|---|---|---|---|---|
| 12 | Ora | 91 | R0.0/R10.1 | 254 | 294 |

REGISTERED ELECTRICAL ENGINEER 04/28/11 DATE

6-20-11
PLANS APPROVAL DATE

REGISTERED PROFESSIONAL ENGINEER JOANNE VO No. E 16748 Exp 9/30/12 ELECTRICAL STATE OF CALIFORNIA

*THE STATE OF CALIFORNIA OR ITS OFFICERS OR AGENTS SHALL NOT BE RESPONSIBLE FOR THE ACCURACY OR COMPLETENESS OF SCANNED COPIES OF THIS PLAN SHEET.*

FOR COMPLETE RIGHT OF WAY AND ACCURATE ACCESS DATA,
SEE RIGHT OF RECORD MAPS AT DISTRICT OFFICE.

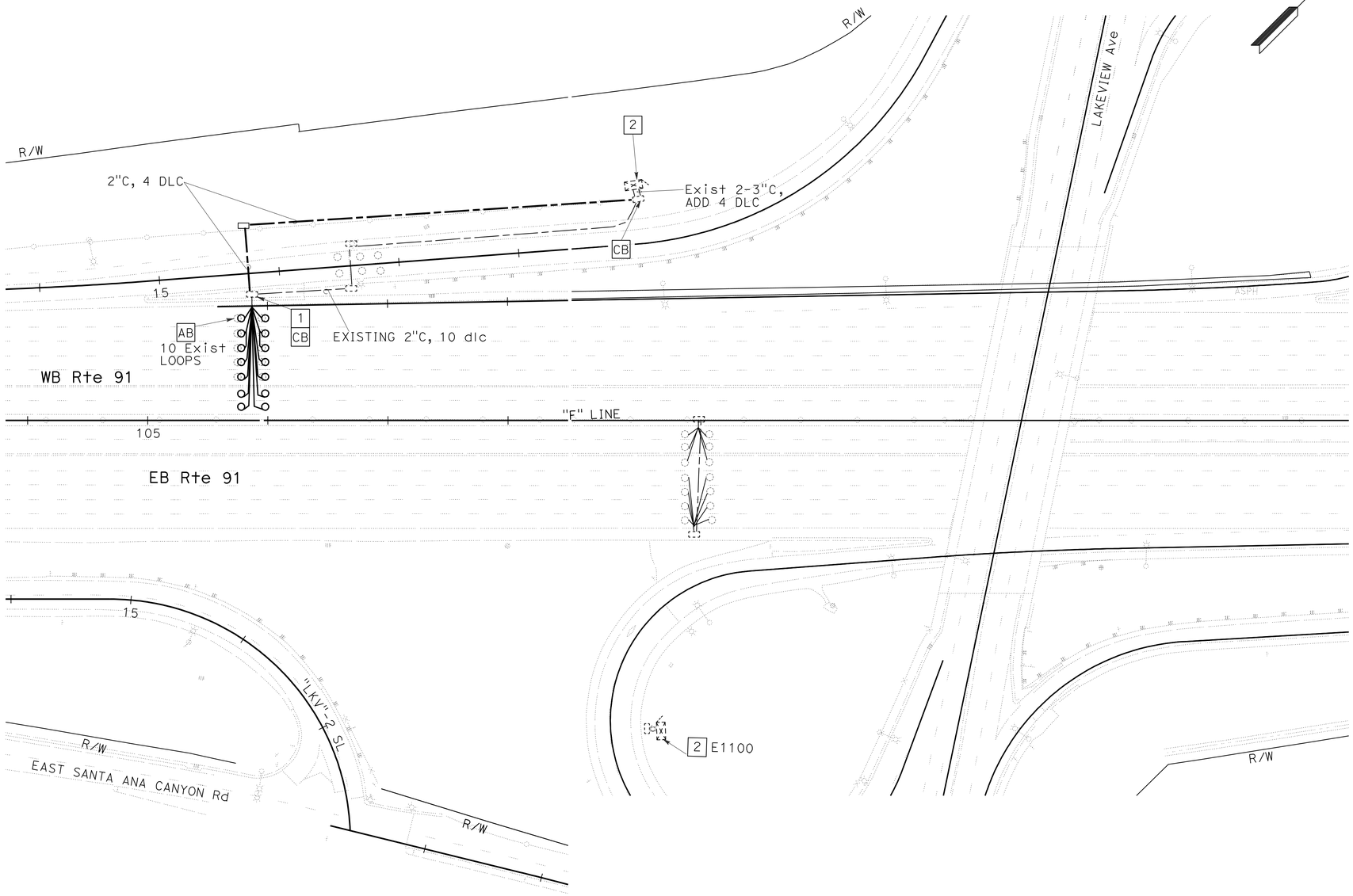


NOTE: (FOR THIS SHEET ONLY)

a. SEE SHEET E-1 FOR NOTES AND DETAILS.

# INDUCTIVE LOOP DETECTOR

SCALE: 1" = 50'

E-29

THIS PLAN IS ACCURATE FOR ELECTRICAL WORK ONLY

STATE OF CALIFORNIA - DEPARTMENT OF TRANSPORTATION
Caltrans
ELECTRICAL DESIGN

FUNCTIONAL SUPERVISOR: SHAHRAM SHAHRIARI

CALCULATED-DESIGNED BY: JOANNE VO
CHECKED BY: VANESSA TRUONG

REVISED BY | DATE REVISED

LAST REVISION 03-01-11 | DATE PLOTTED => 21-JUN-2011 | TIME PLOTTED => 08:26

| Dist | COUNTY | LOCATION CODE | POST MILES TOTAL PROJECT | SHEET No. | TOTAL SHEETS |
|---|---|---|---|---|---|
| 12 | Ora | 91 | R0.0/R10.1 | 255 | 294 |

REGISTERED ELEC. ENGINEER 04/28/11 DATE

6-20-11
PLANS APPROVAL DATE

REGISTERED PROFESSIONAL ENGINEER JOANNE VO No. E 16748 Exp 9/30/12 ELECTRICAL STATE OF CALIFORNIA

*THE STATE OF CALIFORNIA OR ITS OFFICERS OR AGENTS SHALL NOT BE RESPONSIBLE FOR THE ACCURACY OR COMPLETENESS OF SCANNED COPIES OF THIS PLAN SHEET.*

FOR COMPLETE RIGHT OF WAY AND ACCURATE ACCESS DATA,
SEE RIGHT OF RECORD MAPS AT DISTRICT OFFICE.

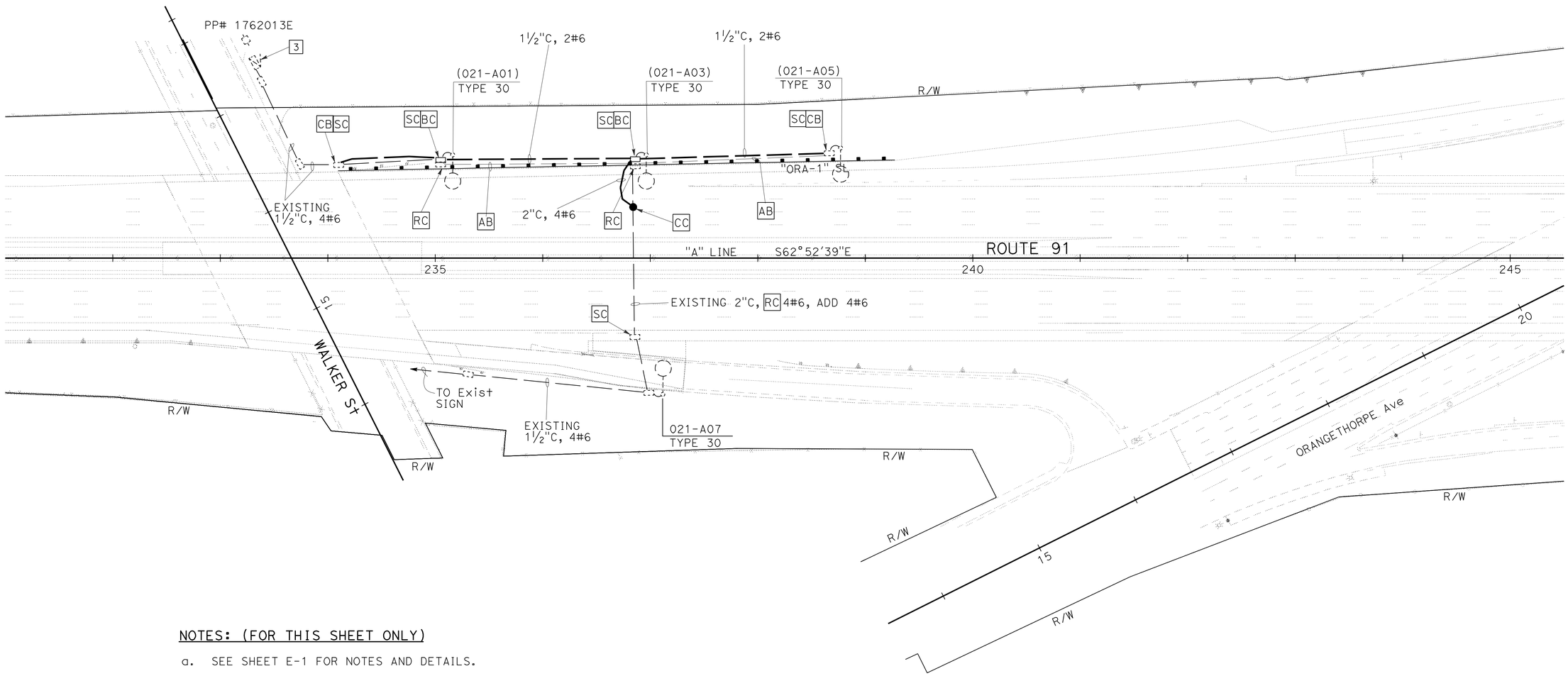


NOTES: (FOR THIS SHEET ONLY)

a. SEE SHEET E-1 FOR NOTES AND DETAILS.

# MODIFY LIGHTING AND SIGN ILLUMINATION

SCALE: 1" = 50'

**E-30**

THIS PLAN IS ACCURATE FOR ELECTRICAL WORK ONLY.

STATE OF CALIFORNIA - DEPARTMENT OF TRANSPORTATION
Caltrans® ELECTRICAL DESIGN

FUNCTIONAL SUPERVISOR: SHAHRAM SHAHRIARI
CALCULATED-DESIGNED BY: JOANNE VO
CHECKED BY: VANESSA TRUONG
REVISED BY
DATE REVISED

LAST REVISION 03-01-11 DATE PLOTTED => 19-OCT-2011 TIME PLOTTED => 08:14

| Dist | COUNTY | LOCATION CODE | POST MILES TOTAL PROJECT | SHEET No. | TOTAL SHEETS |
|---|---|---|---|---|---|
| 12 | Ora | 91 | R0.0/R10.1 | 256 | 294 |

REGISTERED ELEC. ENGINEER 04/28/11 DATE

6-20-11
PLANS APPROVAL DATE

REGISTERED PROFESSIONAL ENGINEER JOANNE VO No. E 16748 Exp 9/30/12 ELECTRICAL STATE OF CALIFORNIA

*THE STATE OF CALIFORNIA OR ITS OFFICERS OR AGENTS SHALL NOT BE RESPONSIBLE FOR THE ACCURACY OR COMPLETENESS OF SCANNED COPIES OF THIS PLAN SHEET.*

FOR COMPLETE RIGHT OF WAY AND ACCURATE ACCESS DATA,
SEE RIGHT OF RECORD MAPS AT DISTRICT OFFICE.

NOTE: (FOR THIS SHEET ONLY)

a. SEE SHEET E-1 FOR NOTES AND DETAILS.

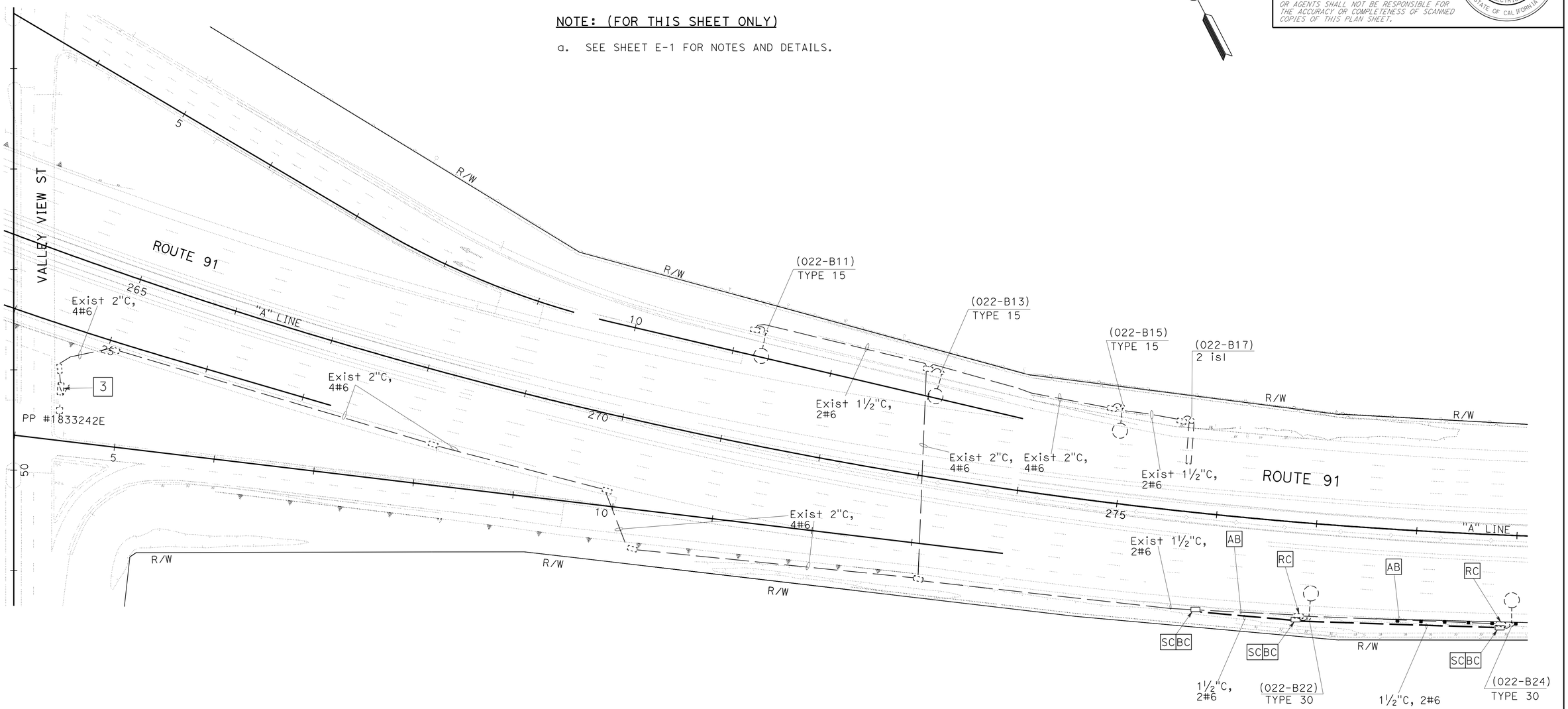


# MODIFY LIGHTING AND SIGN ILLUMINATION

SCALE: 1" = 50'

THIS PLAN IS ACCURATE FOR ELECTRICAL WORK ONLY.

**E-31**

REVISED BY | DATE REVISED
JOANNE VO | VANESSA TRUONG
CALCULATED-DESIGNED BY | CHECKED BY
FUNCTIONAL SUPERVISOR
SHAHRAM SHAHRIARI

STATE OF CALIFORNIA - DEPARTMENT OF TRANSPORTATION
Caltrans® **ELECTRICAL DESIGN**

LAST REVISION 03-01-11 | DATE PLOTTED => 19-OCT-2011 TIME PLOTTED => 08:15

| Dist | COUNTY | LOCATION CODE | POST MILES TOTAL PROJECT | SHEET No. | TOTAL SHEETS |
|---|---|---|---|---|---|
| 12 | Ora | 91 | R0.0/R10.1 | 257 | 294 |

RE GISTERED ELEC. ENGINEER 04/28/11 DATE

6-20-11
PLANS APPROVAL DATE

REGISTERED PROFESSIONAL ENGINEER
JOANNE VO
No. E 16748
Exp 9/30/12
ELECTRICAL
STATE OF CALIFORNIA

*THE STATE OF CALIFORNIA OR ITS OFFICERS OR AGENTS SHALL NOT BE RESPONSIBLE FOR THE ACCURACY OR COMPLETENESS OF SCANNED COPIES OF THIS PLAN SHEET.*

FOR COMPLETE RIGHT OF WAY AND ACCURATE ACCESS DATA,
SEE RIGHT OF RECORD MAPS AT DISTRICT OFFICE.

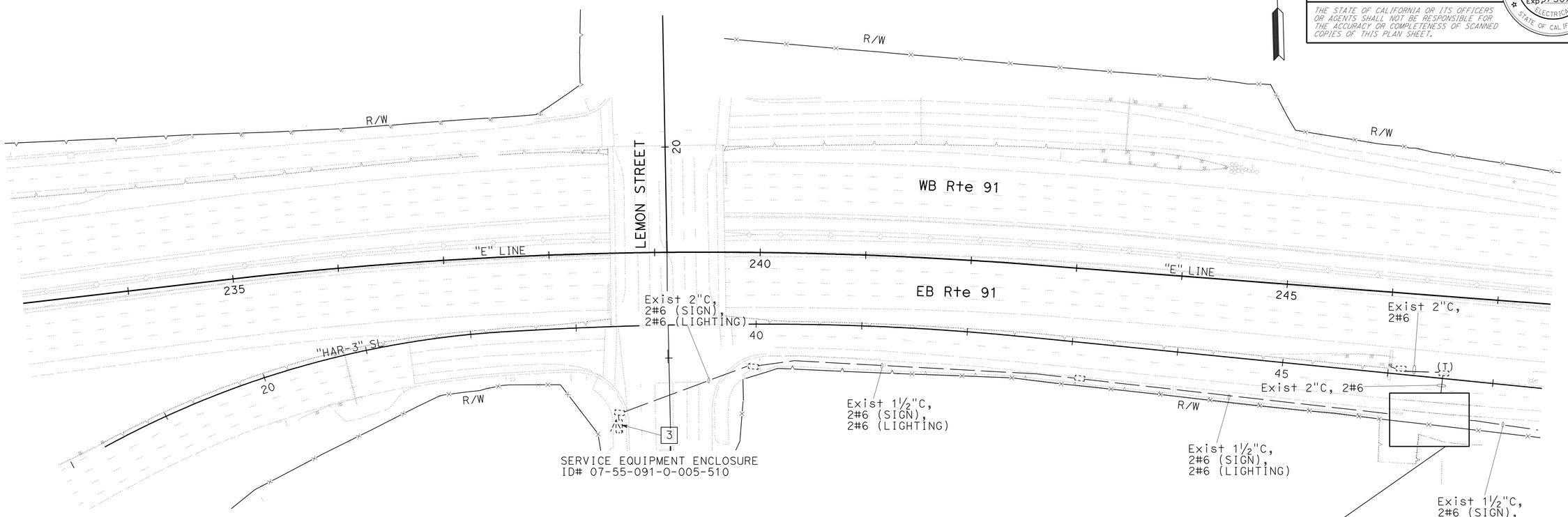


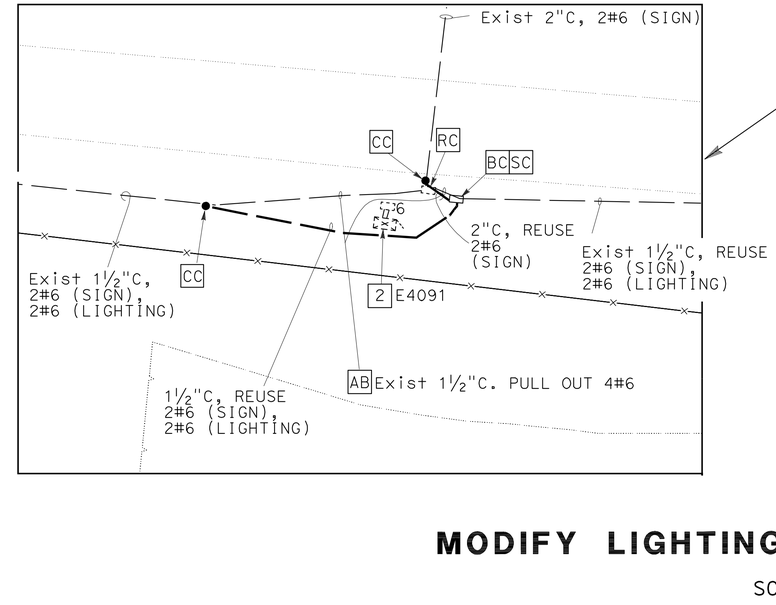


NOTE: (FOR THIS SHEET ONLY)

a. SEE SHEET E-1 FOR NOTES AND DETAILS.

# MODIFY LIGHTING AND SIGN ILLUMINATION

SCALE: 1" = 50'

**E-32**

THIS PLAN IS ACCURATE FOR ELECTRICAL WORK ONLY.

REVISED BY | DATE REVISED
JOANNE VO | VANESSA TRUONG
CALCULATED-DESIGNED BY | CHECKED BY
FUNCTIONAL SUPERVISOR
SHAHRAM SHAHRIARI

STATE OF CALIFORNIA - DEPARTMENT OF TRANSPORTATION
Caltrans
ELECTRICAL DESIGN

LAST REVISION 03-01-11
DATE PLOTTED => 19-OCT-2011
TIME PLOTTED => 08:15

| Dist | COUNTY | LOCATION CODE | POST MILES TOTAL PROJECT | SHEET No. | TOTAL SHEETS |
|---|---|---|---|---|---|
| 12 | Ora | 91 | R0.0/R10.1 | 258 | 294 |

REGISTERED ELEC. ENGINEER 04/28/11 DATE

6-20-11
PLANS APPROVAL DATE

REGISTERED PROFESSIONAL ENGINEER JOANNE VO No. E 16748 Exp 9/30/12 ELECTRICAL STATE OF CALIFORNIA

*THE STATE OF CALIFORNIA OR ITS OFFICERS OR AGENTS SHALL NOT BE RESPONSIBLE FOR THE ACCURACY OR COMPLETENESS OF SCANNED COPIES OF THIS PLAN SHEET.*

FOR COMPLETE RIGHT OF WAY AND ACCURATE ACCESS DATA,
SEE RIGHT OF RECORD MAPS AT DISTRICT OFFICE.

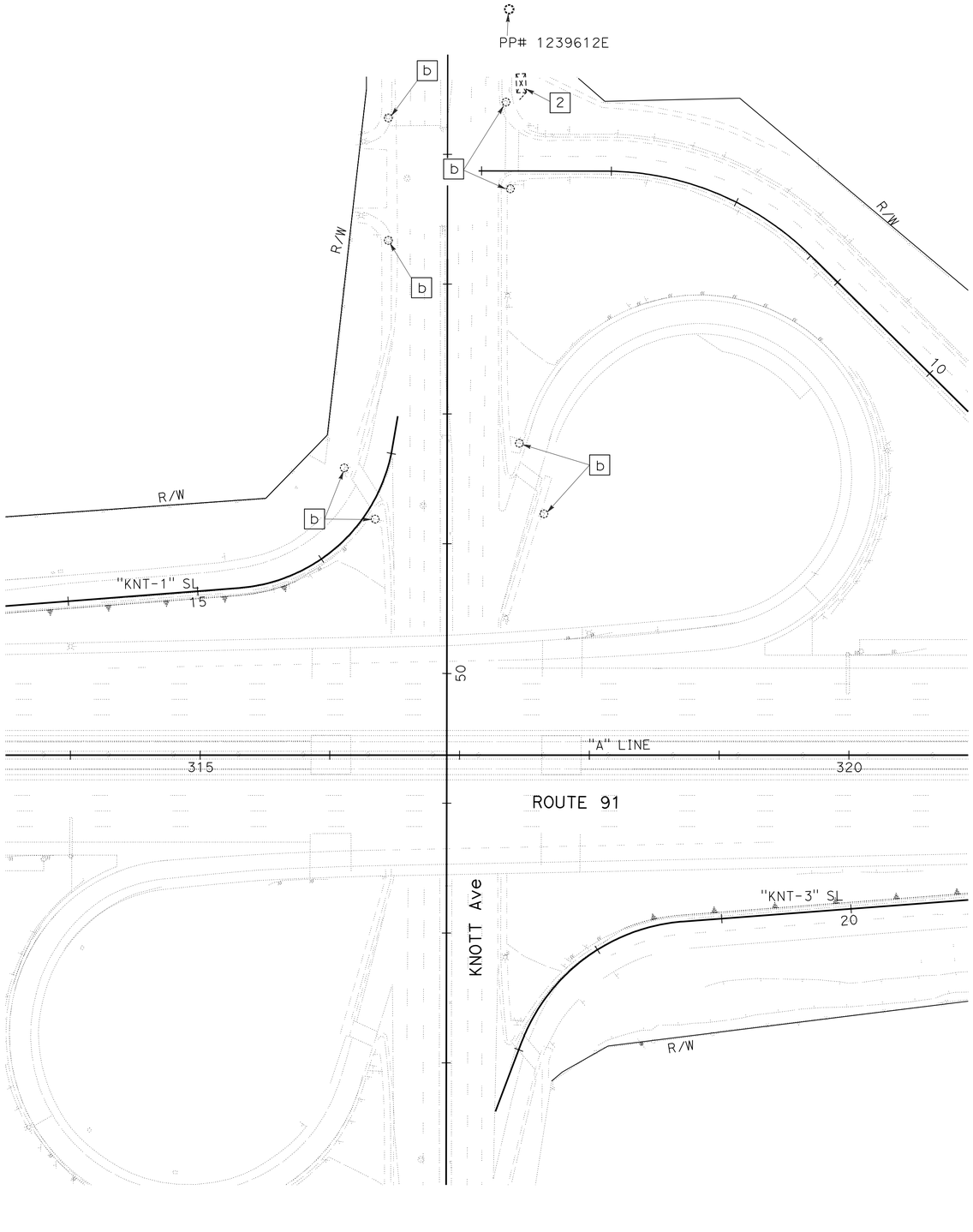


## NOTES: (FOR THIS SHEET ONLY)

a. SEE SHEET E-1 FOR NOTES AND DETAILS.

[b] EXISTING POLE. [RC] EXISTING ppb. INSTALL NEW PPB AT NEW HEIGHT, REFER TO ES-7A.

# PEDESTRIAN PUSH BUTTON

SCALE: 1" = 50'

THIS PLAN IS ACCURATE FOR ELECTRICAL WORK ONLY.

E-33

STATE OF CALIFORNIA - DEPARTMENT OF TRANSPORTATION
Caltrans® ELECTRICAL DESIGN

FUNCTIONAL SUPERVISOR: SHAHRAM SHAHRIARI
CALCULATED-DESIGNED BY: JOANNE VO
CHECKED BY: VANESSA TRUONG
REVISED BY
DATE REVISED

LAST REVISION 03-01-11
DATE PLOTTED => 19-OCT-2011
TIME PLOTTED => 08:15

| DIST | COUNTY | ROUTE | POST MILES TOTAL PROJECT | SHEET NO. | TOTAL SHEETS |
|---|---|---|---|---|---|
| 12 | Ora | 91 | R0.0/R10.1 | 259 | 294 |

REGISTERED CIVIL ENGINEER

June 6, 2008
PLANS APPROVAL DATE

REGISTERED PROFESSIONAL ENGINEER
Donald E. Howe
No. C46402
Exp. 3-31-09
CIVIL
STATE OF CALIFORNIA

*The State of California or its officers or agents shall not be responsible for the accuracy or completeness of electronic copies of this plan sheet.*

*To accompany plans dated* 6-20-11

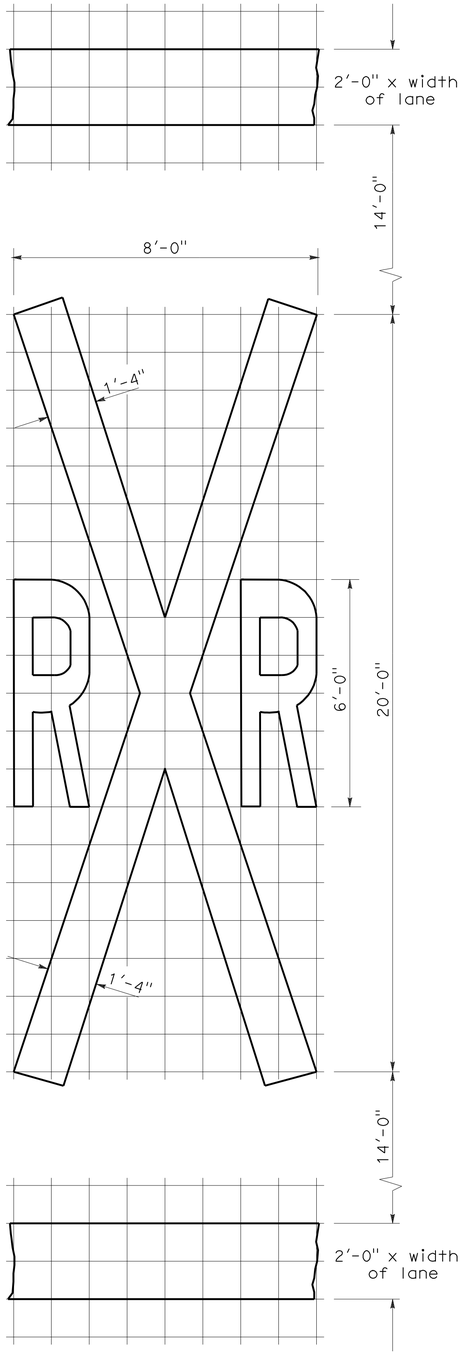


1'-0" GRID
A=70 sq ft ✳

## RAILROAD CROSSING SYMBOL

✳70 sq ft DOES NOT INCLUDE THE 2'-0" x VARIABLE WIDTH TRANSVERSE LINES.

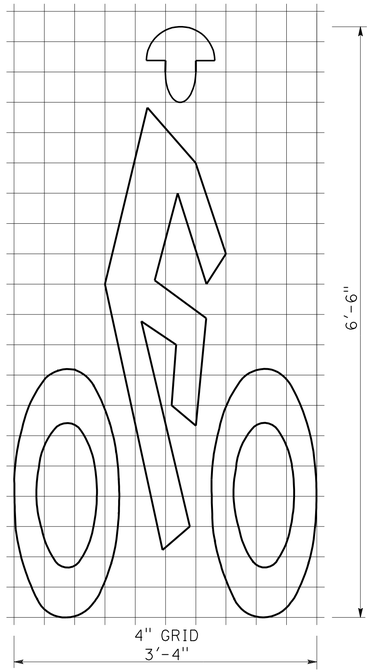


A=7 sq ft

## BIKE LANE SYMBOL

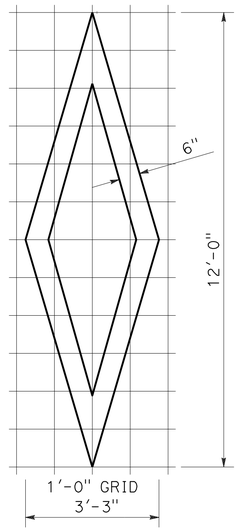


A=11 sq ft

## DIAMOND SYMBOL

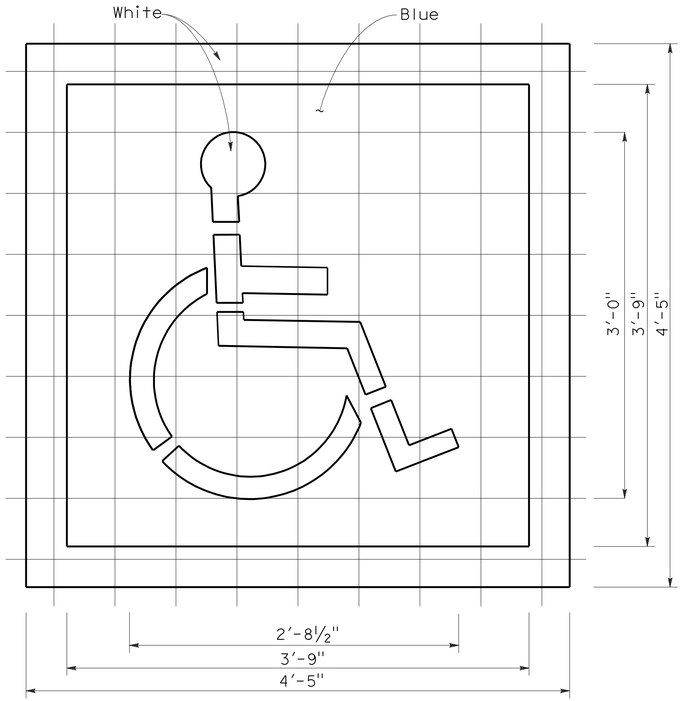


6" GRID
A (White) =9 sq ft
A (Blue) =14 sq ft

## INTERNATIONAL SYMBOL OF ACCESSIBILITY MARKING

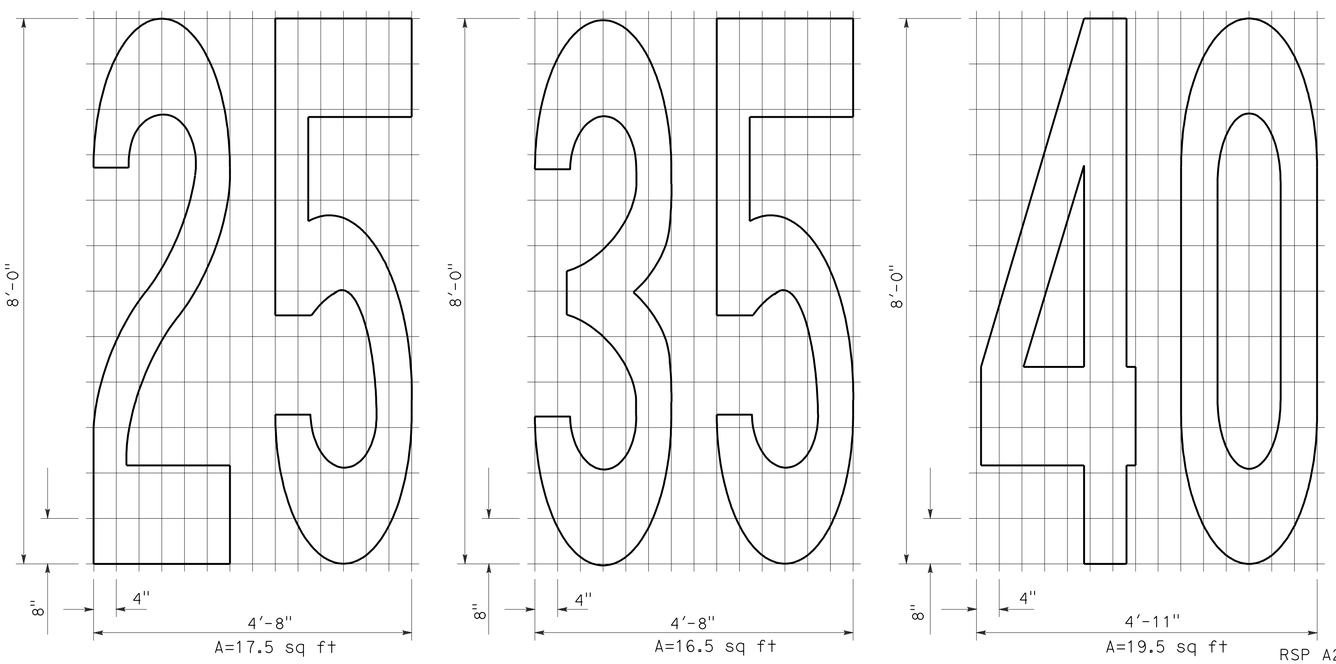


A=17.5 sq ft
A=16.5 sq ft
A=19.5 sq ft

## NUMERALS

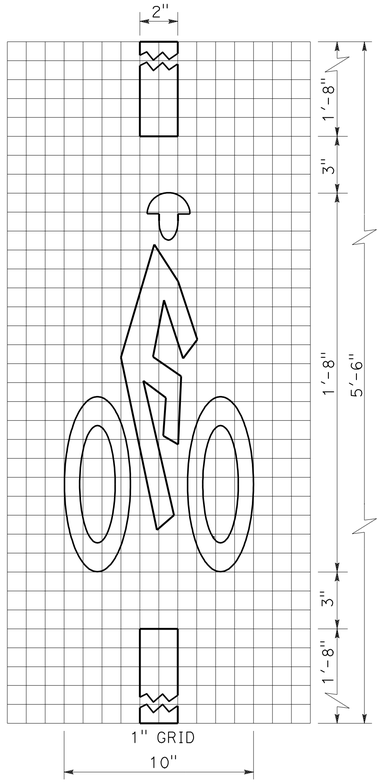


A=2 sq ft

## BICYCLE LOOP DETECTOR SYMBOL

NOTE:

1. Minor variations in dimensions may be accepted by the Engineer.

STATE OF CALIFORNIA
DEPARTMENT OF TRANSPORTATION

# PAVEMENT MARKINGS SYMBOLS AND NUMERALS

NO SCALE

RSP A24C DATED JUNE 6, 2008 SUPERSEDES STANDARD PLAN A24C DATED MAY 1, 2006 - PAGE 11 OF THE STANDARD PLANS BOOK DATED MAY 2006.

**REVISED STANDARD PLAN RSP A24C**

**2006 REVISED STANDARD PLAN RSP A24C**

5-27-08

| Dist | COUNTY | ROUTE | POST MILES TOTAL PROJECT | SHEET No. | TOTAL SHEETS |
|---|---|---|---|---|---|
| 12 | Ora | 91 | R0.0/R10.1 | 260 | 294 |

Randell D. Hiatt
REGISTERED CIVIL ENGINEER

May 20, 2011
PLANS APPROVAL DATE

REGISTERED PROFESSIONAL ENGINEER
Randell D. Hiatt
No. C50200
Exp. 6-30-11
CIVIL
STATE OF CALIFORNIA

*The State of California or its officers or agents shall not be responsible for the accuracy or completeness of electronic copies of this plan sheet.*

*To accompany plans dated* 6-20-11

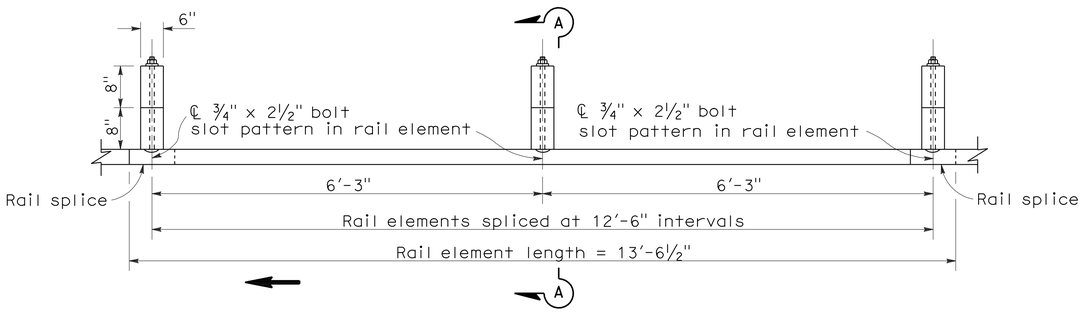


PLAN

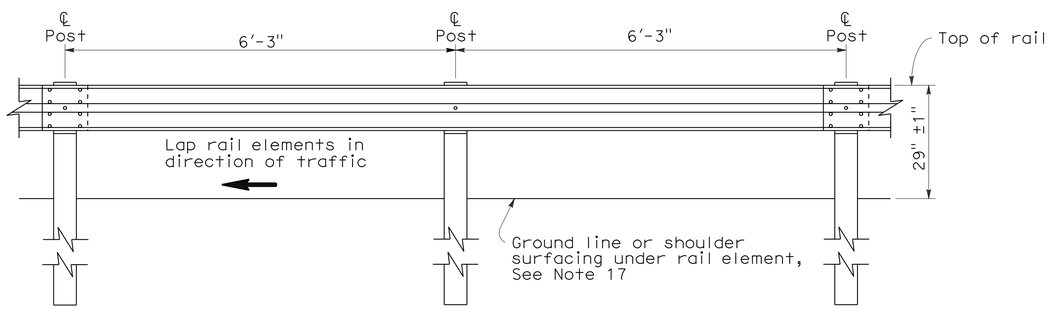


ELEVATION

## METAL BEAM GUARD RAILING WITH WOOD POST AND BLOCKS

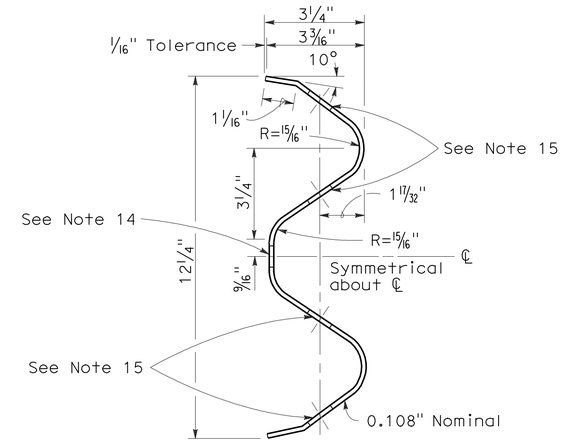


SECTION THRU RAIL ELEMENT

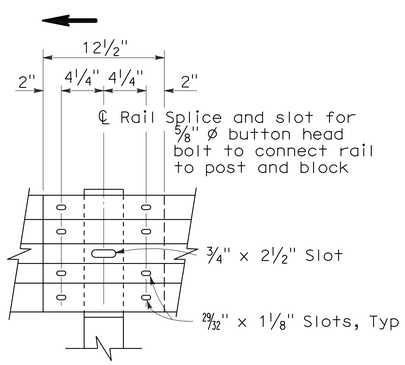


ELEVATION

## RAIL ELEMENT SPLICE DETAIL

a) Connect the over lapped end of the rail elements with ⅝" ø x 1⅜" button head oval shoulder splice bolts inserted into the 29⁄32" x 1⅛" slots and bolted together with ⅝" ø recessed hex nuts. Recess of hex nut points toward rail element. A total of 8 bolts and nuts are to be used at each rail splice connection.

b) The ends of the rail elements are to be overlapped in the direction of traffic (see details).

c) Where end cap is to be attached to the end of a rail element, a total of 4 of the above described splice bolts and nuts are to be used.

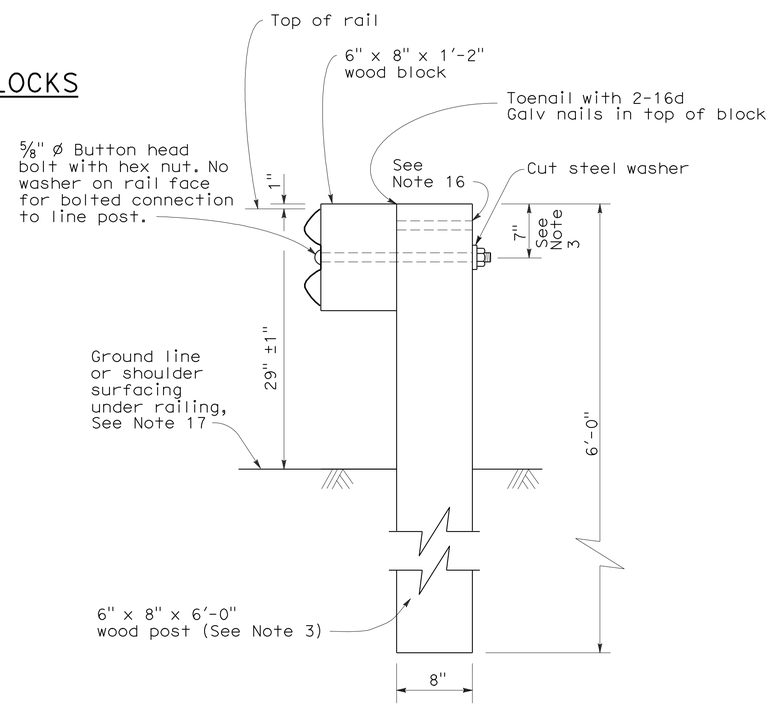


SECTION A-A

## TYPICAL WOOD LINE POST INSTALLATION

See Note 4

## NOTES:

1. For details of steel post installations, see Standard Plan A77A2.
2. For details of standard hardware used to construct guard railing, see Standard Plan A77B1.
3. For details of wood posts and wood blocks used to construct guard railing, see Standard Plan A77C1.
4. For additional installation details, see Standard Plan A77C3.
5. Guard railing post spacing to be 6'-3" center to center, except as otherwise noted.
6. For guard railing typical layouts, see the A77E, A77F and A77G Series of Standard Plans.
7. For terminal system end treatment details, see the A77L Series of Standard Plans. To connect railing to terminal system end treatment, transition the top of railing height at a ratio of 120:1 to terminal system end treatment height plus one 12'-6" standard railing section at the transitioned height for a horizontal connection to the end treatment.
8. For guard railing end anchor details, see Standard Plans A77H1 and A77I2.
9. For details of guard railing transition to bridge railing, see Standard Plan A77J4.
10. For additional details of guard railing connection to bridge railings, see Standard Plans A77J1, A77J2 and A77K1.
11. For guard railing connection details to abutments and walls, see Standard Plan A77J3.
12. Direction of adjacent traffic indicated by ➡.
13. For typical guard railing delineation and dike positioning details, see Standard Plan A77C4.
14. Slotted hole for bolted connection of rail element to block and post. See "Section Thru Rail Element".
15. Slotted holes for splice bolts to overlap ends of rail element. See "Section Thru Rail Element".
16. Additional hole in uppermost portion of line post is for potential future adjustments of railing height. See Standard Plan A77C1.
17. Install posts in soil.

STATE OF CALIFORNIA
DEPARTMENT OF TRANSPORTATION

# METAL BEAM GUARD RAILING STANDARD RAILING SECTION (WOOD POST WITH WOOD BLOCK)

NO SCALE

RSP A77A1 DATED MAY 20, 2011 SUPERSEDES STANDARD PLAN A77A1 DATED MAY 1, 2006 - PAGE 41 OF THE STANDARD PLANS BOOK DATED MAY 2006.

**REVISED STANDARD PLAN RSP A77A1**

**2006 REVISED STANDARD PLAN RSP A77A1**

3-10-11

To accompany plans dated 6-20-11

| Dist | COUNTY | ROUTE | POST MILES TOTAL PROJECT | SHEET No. | TOTAL SHEETS |
|---|---|---|---|---|---|
| 12 | Ora | 91 | R0.0/R10.1 | 261 | 294 |

Randell D. Hiatt
REGISTERED CIVIL ENGINEER

May 20, 2011
PLANS APPROVAL DATE

REGISTERED PROFESSIONAL ENGINEER
Randell D. Hiatt
No. C50200
Exp. 6-30-11
CIVIL
STATE OF CALIFORNIA

*The State of California or its officers or agents shall not be responsible for the accuracy or completeness of electronic copies of this plan sheet.*

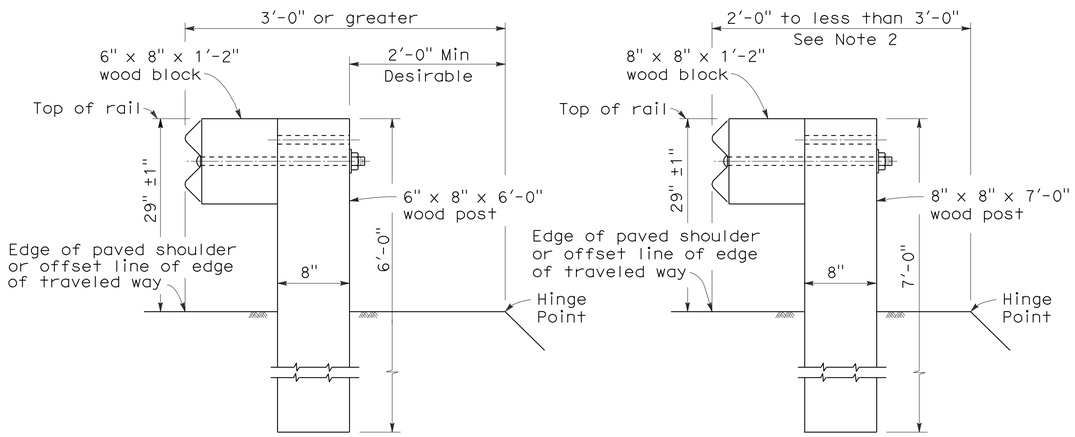


DETAIL A
TYPICAL ROADWAY INSTALLATION
See Note 1

DETAIL B
NARROW ROADWAY INSTALLATION
See Note 1

POST EMBEDMENT

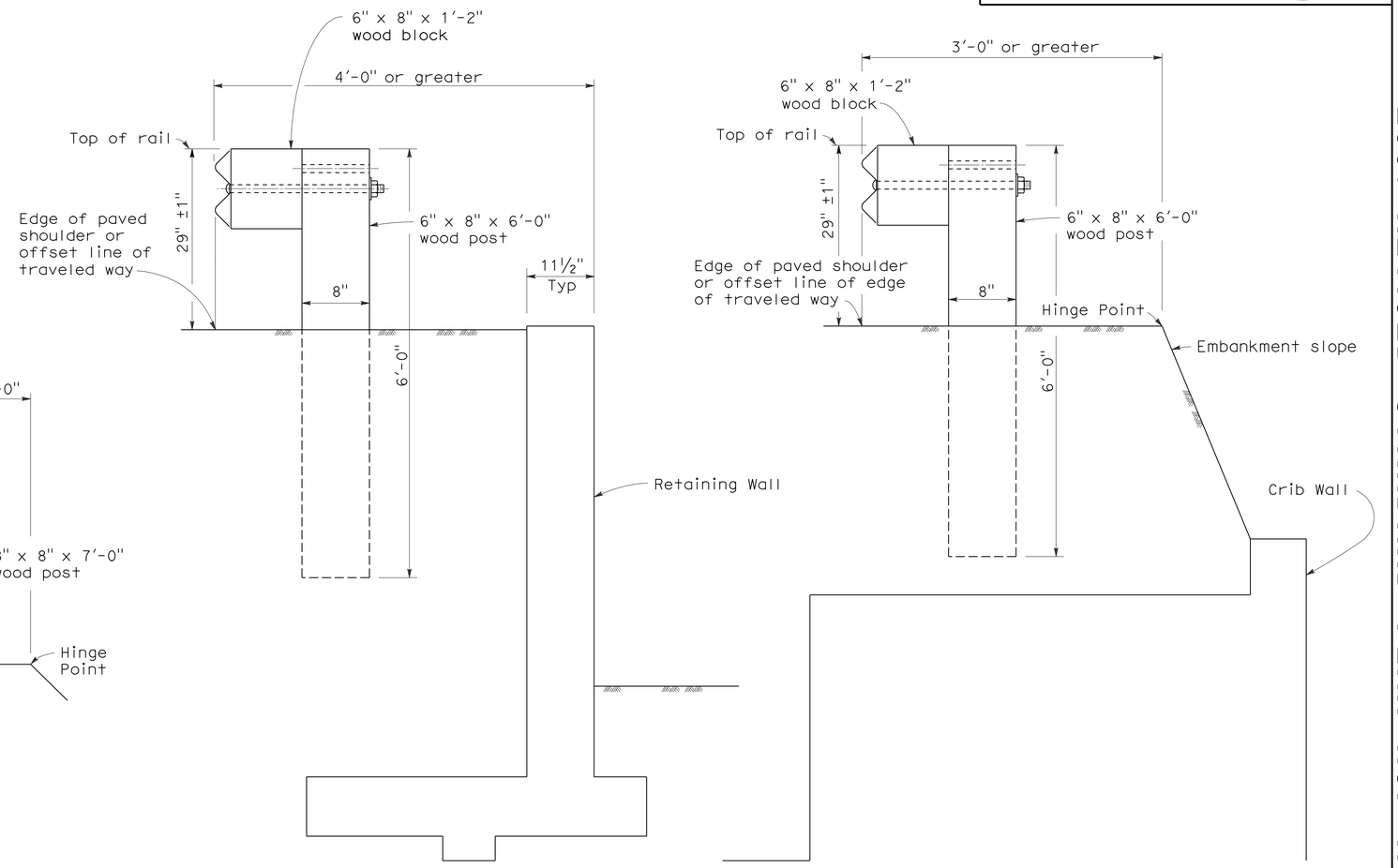


DETAIL C

DETAIL D

INSTALLATION AT EARTH RETAINING WALLS

## NOTES:

1. These installation details also applicable to steel line post installations. For Detail A, C, and D, where steel line post installations are constructed, W6 x 9 steel post, 6'-0" in length, with 6" x 8" x 1'-2" notched wood blocks or notched recycled plastic blocks are to be used in place of the size of wood post and wood block shown. For Detail B, where steel line post installations are constructed, W6 x 9 steel post, 7'-0" in length, with 6" x 8" x 1'-2" notched wood blocks or notched recycled plastic blocks are to be used in place of the size of wood post and wood block shown. For additional installation details, see Standard Plans A77A1 and A77A2.
2. Where the distance between the face of the rail and the hinge point is less than 2'-0", see the Project Plans for special details.
3. For dike positioning with guard railing installations, see Standard Plan A77C4.

STATE OF CALIFORNIA
DEPARTMENT OF TRANSPORTATION

# METAL BEAM GUARD RAILING TYPICAL LINE POST EMBEDMENT AND HINGE POINT OFFSET DETAILS

NO SCALE

RSP A77C3 DATED MAY 20, 2011 SUPERSEDES STANDARD PLAN A77C3
DATED MAY 1, 2006 - PAGE 46 OF THE STANDARD PLANS BOOK DATED MAY 2006.

**REVISED STANDARD PLAN RSP A77C3**

**2006 REVISED STANDARD PLAN RSP A77C3**

3-10-11

| Dist | COUNTY | ROUTE | POST MILES TOTAL PROJECT | SHEET No. | TOTAL SHEETS |
|---|---|---|---|---|---|
| 12 | Ora | 91 | R0.0/R10.1 | 262 | 294 |

Randell D. Hiatt
REGISTERED CIVIL ENGINEER

May 20, 2011
PLANS APPROVAL DATE

REGISTERED PROFESSIONAL ENGINEER
Randell D. Hiatt
No. C50200
Exp. 6-30-11
CIVIL
STATE OF CALIFORNIA

*The State of California or its officers or agents shall not be responsible for the accuracy or completeness of electronic copies of this plan sheet.*

*To accompany plans dated* 6-20-11

## NOTES:

1. When necessary to place dike in front of face of guard railing, only Type C dike may be used. For dike details, see Standard Plan A87B.
2. For standard railing post embedment, see Standard Plans A77C3.
3. Guard railing delineation to be used where shown on the Project Plans.
4. When dike or curb is placed under guard railing, the maximum height of the dike or curb shall be 4". Mountable dike should not be used. For dike and curb details, see Standard Plans A87A and A87B.
5. For details of typical distance between the face of rail and hinge point, see Standard Plan A77C3.
6. For steel line posts, use ¼ - 20 self-tapping screws in 0.22" diameter holes or ¼" bolts in 9/32" diameter holes.

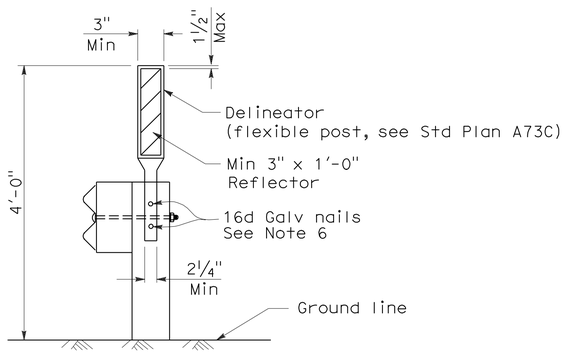


GUARD RAILING DELINEATION

See Note 3

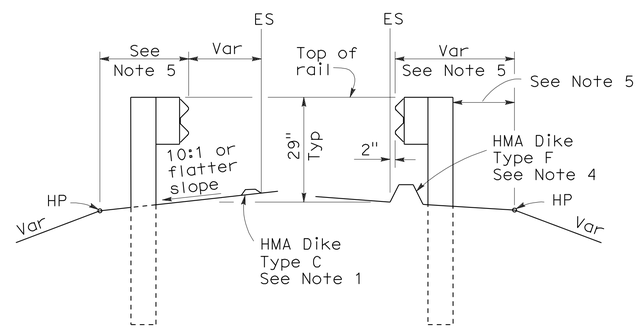


DIKE POSITIONING

See Note 1

STATE OF CALIFORNIA
DEPARTMENT OF TRANSPORTATION

# METAL BEAM GUARD RAILING TYPICAL RAILING DELINEATION AND DIKE POSITIONING DETAILS

NO SCALE

RSP A77C4 DATED MAY 20, 2011 SUPERSEDES RSP A77C4 DATED JUNE 6, 2008 AND STANDARD PLAN A77C4 DATED MAY 1, 2006 - PAGE 47 OF THE STANDARD PLANS BOOK DATED MAY 2006.

**REVISED STANDARD PLAN RSP A77C4**

**2006 REVISED STANDARD PLAN RSP A77C4**

3-10-11

| DIST | COUNTY | ROUTE | POST MILES TOTAL PROJECT | SHEET NO. | TOTAL SHEETS |
|---|---|---|---|---|---|
| 12 | Ora | 91 | R0.0/R10.1 | 263 | 294 |

Randell D. Hiatt
REGISTERED CIVIL ENGINEER

June 6, 2008
PLANS APPROVAL DATE

REGISTERED PROFESSIONAL ENGINEER
Randell D. Hiatt
No. C50200
Exp. 6-30-09
CIVIL
STATE OF CALIFORNIA

*The State of California or its officers or agents shall not be responsible for the accuracy or completeness of electronic copies of this plan sheet.*

*To accompany plans dated* 6-20-11

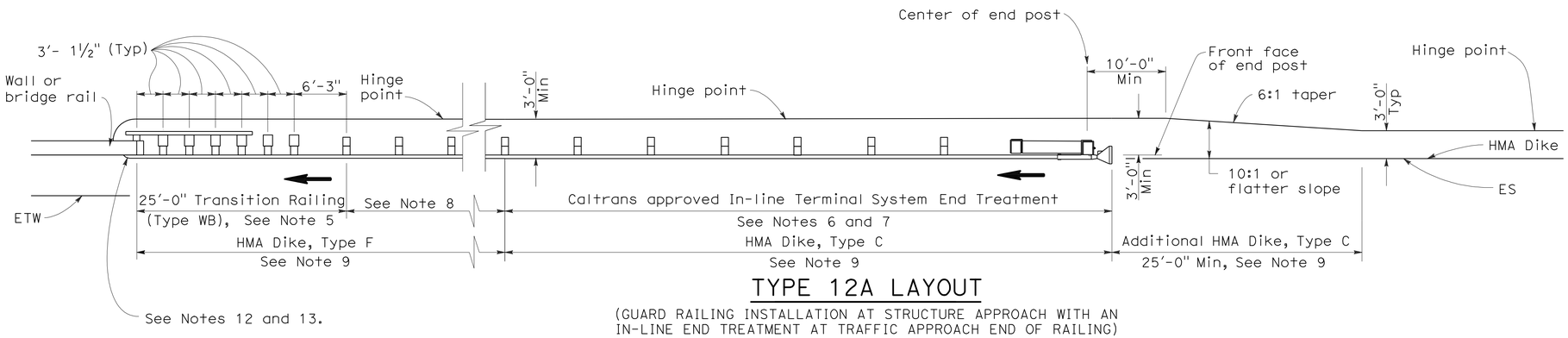


## TYPE 12A LAYOUT

(GUARD RAILING INSTALLATION AT STRUCTURE APPROACH WITH AN IN-LINE END TREATMENT AT TRAFFIC APPROACH END OF RAILING)
See Notes 10

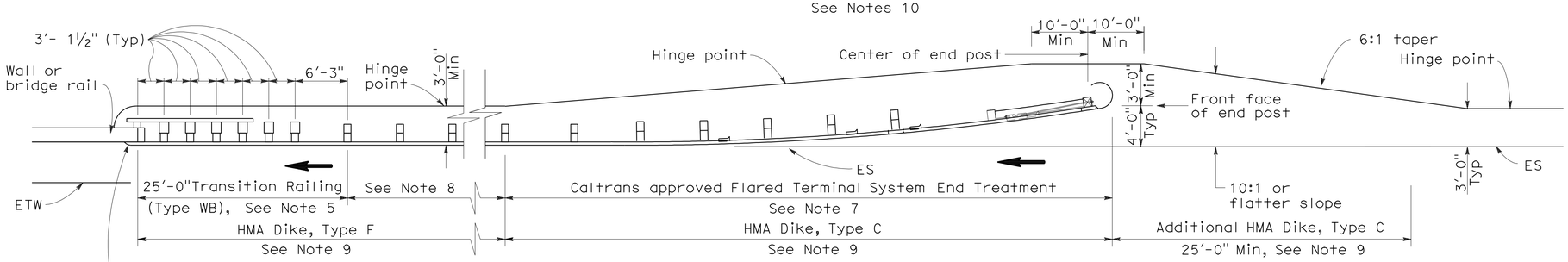


## TYPE 12B LAYOUT

(GUARD RAILING INSTALLATION AT STRUCTURE APPROACH WITH A FLARED END TREATMENT AT TRAFFIC APPROACH END OF RAILING)
See Notes 10

## NOTES:

1. Line post, blocks and hardware to be used are shown on Standard Plans A77A1, A77A2, A77B1, A77C1 and A77C2.
2. Guard rail post spacing to be 6'-3" center to center, except as otherwise noted.
3. Except as noted, line posts are 6" x 8" x 6'-0" wood with 6" x 8" x 1'-2" wood blocks. W6 x 9 steel posts, 6'-0" in length, with 6" x 8" x 1'-2" notched wood blocks or plastic blocks may be used for 6" x 8" x 6'-0" wood posts with 6" x 8" x 1'-2" wood blocks where applicable and when specified.
4. Direction of adjacent traffic indicated by ➡.
5. For Transition Railing (Type WB) details for Types 12A and 12B Layouts, see Standard Plan A77J4.
6. In-line Terminal System End Treatments are used where site conditions will not accommodate a flared end treatment.
7. The type of terminal system end treatment to be used will be shown on the Project Plans.
8. Dependent on site conditions (embankment height, side slopes, or other fixed objects), it may be advisable to construct additional guard railing (a length equal to multiples of 12'-6" with 6'-3" post spacing) between the transition railing and end treatment.
9. Where placement of dike is required with guard railing installations, see Revised Standard Plan RSP A77C4 for dike positioning details.
10. Type 12A or Type 12B Layouts are typically used:
    a. To the right of approaching traffic, at the end of a structure, on two-lane conventional highway where the roadbed width across the structure is less than 40 feet.
    b. To the left of approaching traffic, at the end of a structure, on two-lane conventional highway where the roadbed width across the structure is less than 40 feet.
    c. To the right of approaching traffic at the end of each structure on multilane freeways or expressways with separate adjacent or parallel bridges.
    d. To the right of approaching traffic at the end of the structure on multilane freeways or expressways with decked median on the bridge.
11. See Revised Standard Plan RSP A77F3 for typical layout used left of approaching traffic at the ends of each structure on multilane freeways or expressways with separate adjacent or parallel bridges.
12. For additional details of typical connections to bridge rail, see Connection Detail AA on Revised Standard Plans RSP A77J1 and RSP A77J2 and Connection Detail FF on Standard Plans A77K1 and A77K2.
13. For additional details of a typical connection to walls or abutments, see Standard Plan A77J3.

STATE OF CALIFORNIA
DEPARTMENT OF TRANSPORTATION

# METAL BEAM GUARD RAILING TYPICAL LAYOUTS FOR STRUCTURE APPROACH

NO SCALE

RSP A77F1 DATED JUNE 6, 2008 SUPERSEDES STANDARD PLAN A77F1
DATED MAY 1, 2006 - PAGE 54 OF THE STANDARD PLANS BOOK DATED MAY 2006.

**REVISED STANDARD PLAN RSP A77F1**

**2006 REVISED STANDARD PLAN RSP A77F1**

| DIST | COUNTY | ROUTE | POST MILES TOTAL PROJECT | SHEET NO. | TOTAL SHEETS |
|---|---|---|---|---|---|
| 12 | Ora | 91 | R0.0/R10.1 | 264 | 294 |

Randell D. Hiatt
REGISTERED CIVIL ENGINEER

June 6, 2008
PLANS APPROVAL DATE

REGISTERED PROFESSIONAL ENGINEER
Randell D. Hiatt
No. C50200
Exp. 6-30-09
CIVIL
STATE OF CALIFORNIA

*The State of California or its officers or agents shall not be responsible for the accuracy or completeness of electronic copies of this plan sheet.*

*To accompany plans dated* 6-20-11

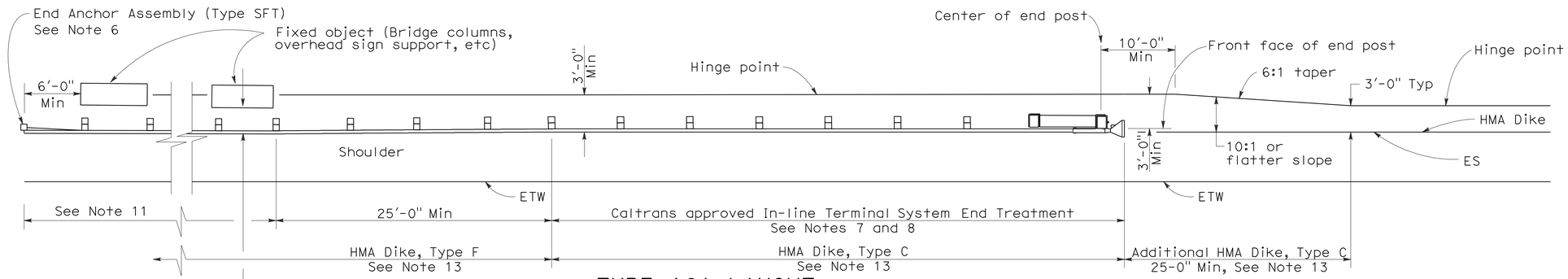


## TYPE 16A LAYOUT

(GUARD RAILING INSTALLATION AT ROADSIDE FIXED OBJECT OR OBJECTS WITH AN IN-LINE END TREATMENT AT TRAFFIC APPROACH END OF RAILING)
See Notes 12 and 13

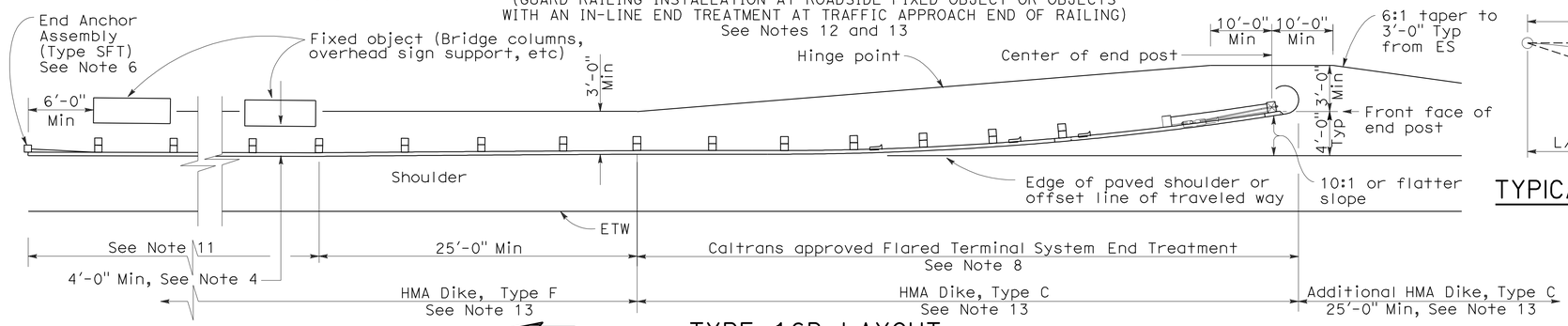


## TYPE 16B LAYOUT

(GUARD RAILING INSTALLATION AT ROADSIDE FIXED OBJECT OR OBJECTS WITH A FLARED END TREATMENT AT TRAFFIC APPROACH END OF RAILING)
See Notes 12 and 13

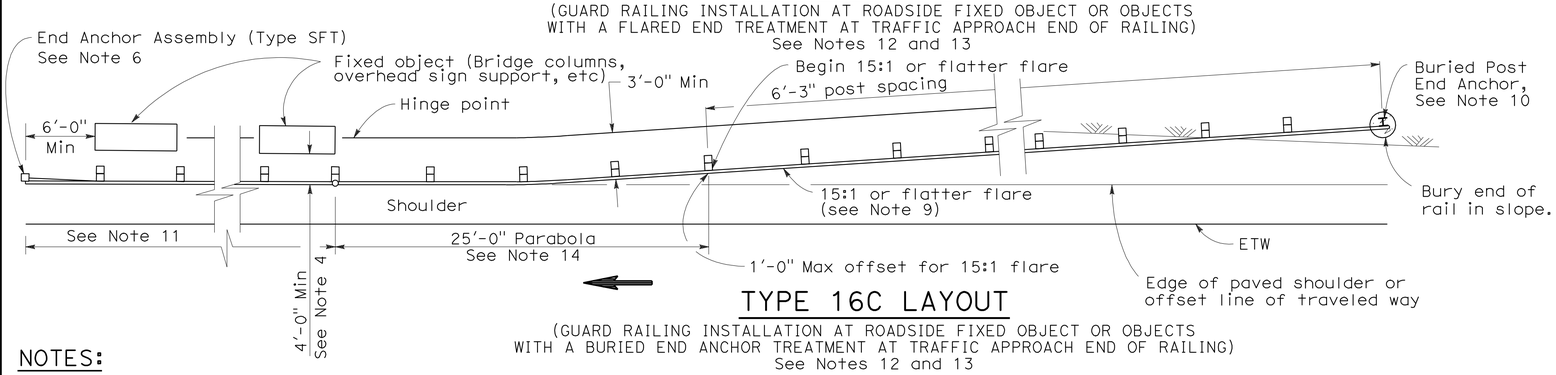


## TYPE 16C LAYOUT

(GUARD RAILING INSTALLATION AT ROADSIDE FIXED OBJECT OR OBJECTS WITH A BURIED END ANCHOR TREATMENT AT TRAFFIC APPROACH END OF RAILING)
See Notes 12 and 13

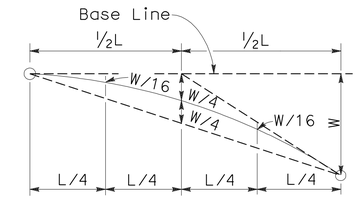


## TYPICAL PARABOLIC LAYOUT

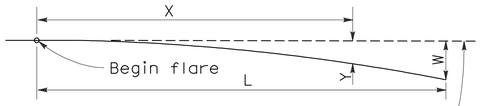


Base Line (Edge of paved shoulder or offset line of edge of traveled way)

$$Y = \frac{WX^2}{L^2}$$

Y = Offset from base line
W = Maximum offset
X = Distance along base line
L = Length of flare

## PARABOLIC FLARE OFFSETS

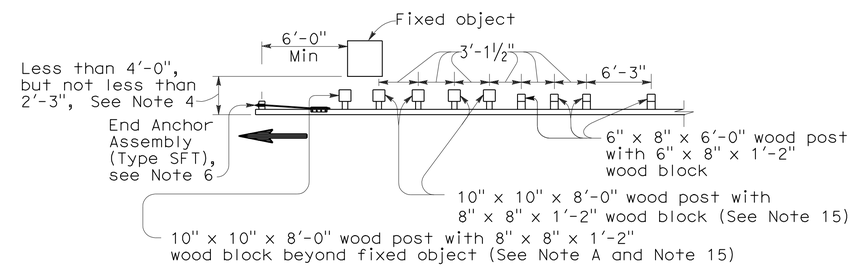


**NOTE A:** For a series of fixed objects (bridge columns, overhead sign supports, etc.) additional 10" x 10" x 8'-0" wood post with 8" x 8" x 1'-2" wood blocks at 3'-1½" center to center spacing are to be used between fixed objects.

## STRENGTHENED RAILING SECTIONS FOR FIXED OBJECT

Use strengthened railing sections with Types 16A, 16B or 16C Layouts where minimum clearance between the face of the guard railing and fixed object(s) is less than 4'-0", but not less than 2'-3". See Note 4

## NOTES:

1. Line post, blocks and hardware to be used are shown on Revised Standard Plans A77A1, A77A2, A77B1, A77C1 and A77C2.
2. Guard railing post spacing to be 6'-3" center to center, except as otherwise noted.
3. Except as noted, line posts are 6" x 8" x 6'-0" wood with 6" x 8" x 1'-2" wood blocks. W6 x 9 steel posts, 6'-0" in length, with 6" x 8" x 1'-2" notched wood blocks or notched recycled plastic blocks may be used for 6" x 8" x 6'-0" wood line posts with 6" x 8" x 1'-2" wood blocks where applicable and when specified.
4. A 4'-0" minimum clearance is required between the face of the railing and the face of a fixed object located directly behind standard guard railing sections with post spacing of 6'-3". Construct guard railing as shown in the detail "Strengthened Railing Sections for Fixed Objects" on this plan, where the clearance between the face of the railing and the face of a fixed object is less than 4'-0", but not less than 2'-3". Where the clearance is less than 2'-3", a concrete wall or barrier should be constructed to shield the fixed object(s).
5. Direction of adjacent traffic indicated by ⟶.
6. For End Anchor Assembly (Type SFT) details, see Standard Plan A77H1.
7. In-line Terminal System End Treatments are used where site conditions will not accommodate a flared end treatment.
8. The type of terminal system to be used will be shown on the Project Plans.
9. The 15:1 or flatter flare used with Type 16C Layout is based on the edge of the paved shoulder or offset line of edge of the traveled way. The length of guard railing within the 15:1 or flatter flare is based on site conditions and should be a length equal to multiples of 12'-6".
10. For details of the Buried Post End Anchor used with Type 16C Layout, see Standard Plan A77I2.
11. As site conditions dictate, construct additional guard railing to shield fixed object(s). Additional guard railing length equal to multiples of 12'-6". Post spacing at 6'-3" except as specified in Note 4.
12. Layout Types 16A, 16B or 16C are typically used where guard railing is recommended to shield roadside fixed object(s) and a crashworthy end treatment is required for only one direction of traffic.
13. Where placement of dike is required with guard railing, see Revised Standard Plan RSP A77C4 for dike positioning details.
14. For typical flare offsets for 25'-0" length parabola with maximum offset of 1'-0", see Revised Standard Plan RSP A77E1.
15. W6 x 15 steel post, 8'-0" in length, with 8" x 8" x 1'-2" notched wood block or notched recycled plastic blocks may be used in place of the 10" x 10" x 8'-0" wood post with 8" x 8" x 1'-2" wood block shown in the "Strengthened Railing Sections Detail".

STATE OF CALIFORNIA
DEPARTMENT OF TRANSPORTATION

# METAL BEAM GUARD RAILING TYPICAL LAYOUTS FOR ROADSIDE FIXED OBJECTS

NO SCALE

RSP A77G3 DATED JUNE 6, 2008 SUPERSEDES STANDARD PLAN A77G3 DATED MAY 1, 2006 - PAGE 61 OF THE STANDARD PLANS BOOK DATED MAY 2006.

**REVISED STANDARD PLAN RSP A77G3**

**2006 REVISED STANDARD PLAN RSP A77G3**

12-10-07

| Dist | COUNTY | ROUTE | POST MILES TOTAL PROJECT | SHEET No. | TOTAL SHEETS |
|---|---|---|---|---|---|
| 12 | Ora | 91 | R0.0/R10.1 | 265 | 294 |

Randell D. Hiatt
REGISTERED CIVIL ENGINEER

May 20, 2011
PLANS APPROVAL DATE

REGISTERED PROFESSIONAL ENGINEER
Randell D. Hiatt
No. C50200
Exp. 6-30-11
CIVIL
STATE OF CALIFORNIA

*The State of California or its officers or agents shall not be responsible for the accuracy or completeness of electronic copies of this plan sheet.*

*To accompany plans dated* 6-20-11

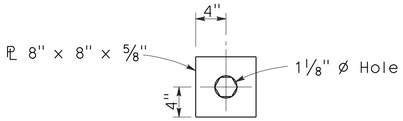


DETAIL A
CABLE CONNECTION
END PLATE

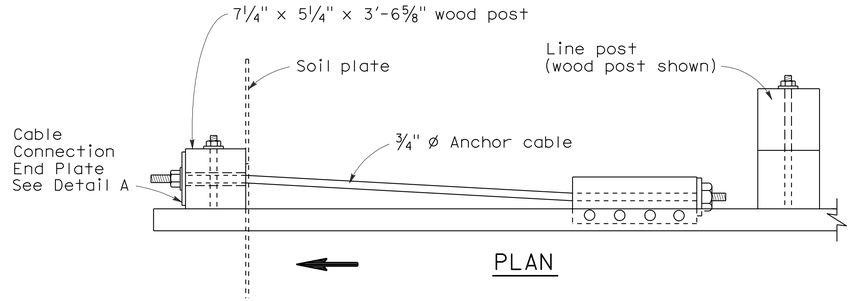


PLAN

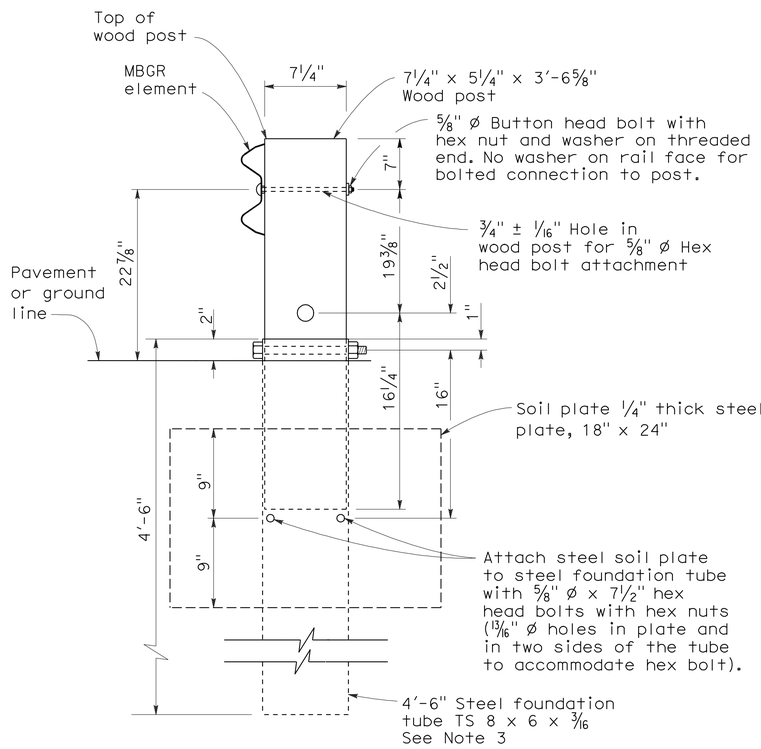


SECTION A-A

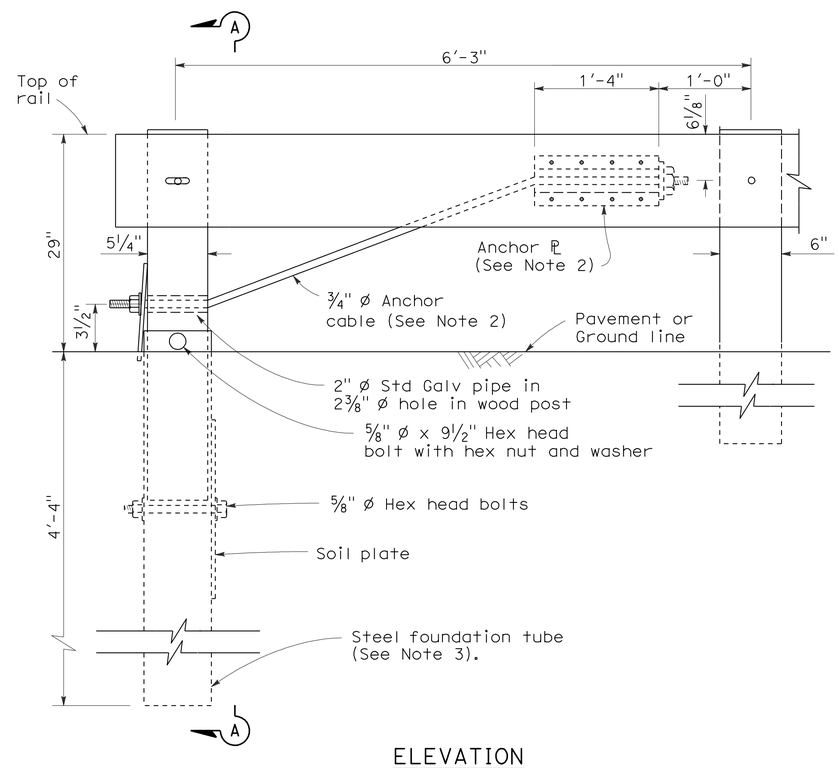


ELEVATION
END ANCHOR
ASSEMBLY (TYPE SFT)
See Note 1

## NOTES:

1. See the A77E, A77F and A77G series of Standard Plans for typical use of End Anchor Assembly (Type SFT).
2. For details of the anchor plate and 3/4" cable, see Standard Plan A77H3.
3. A 6'-0" length steel foundation tube, TS 8 x 6 x 3/16, without a soil plate, may be furnished and installed in place of the 4'-6" length steel foundation tube and soil plate shown. Minimum embedment of the 6'-0" length tube shall be 5'-9". A 5/8" Ø hex head bolt and nut shall be installed in the hole in the 6'-0" length tube to keep the wood post from dropping into the tube.
4. Direction of traffic indicated by ⟹.
5. Install line post, steel foundation tube and soil plate in soil.

STATE OF CALIFORNIA
DEPARTMENT OF TRANSPORTATION

# METAL RAILING END ANCHOR ASSEMBLY (TYPE SFT)

NO SCALE

RSP A77H1 DATED MAY 20, 2011 SUPERSEDES STANDARD PLAN A77H1
DATED MAY 1, 2006 - PAGE 67 OF THE STANDARD PLANS BOOK DATED MAY 2006.

**REVISED STANDARD PLAN RSP A77H1**

**2006 REVISED STANDARD PLAN RSP A77H1**

2-10-07

| Dist | COUNTY | ROUTE | POST MILES TOTAL PROJECT | SHEET No. | TOTAL SHEETS |
|---|---|---|---|---|---|
| 12 | Ora | 91 | R0.0/R10.1 | 266 | 294 |

Randell D. Hiatt
REGISTERED CIVIL ENGINEER

May 20, 2011
PLANS APPROVAL DATE

REGISTERED PROFESSIONAL ENGINEER
Randell D. Hiatt
No. C50200
Exp. 6-30-11
CIVIL
STATE OF CALIFORNIA

*The State of California or its officers or agents shall not be responsible for the accuracy or completeness of electronic copies of this plan sheet.*

*To accompany plans dated* 6-20-11

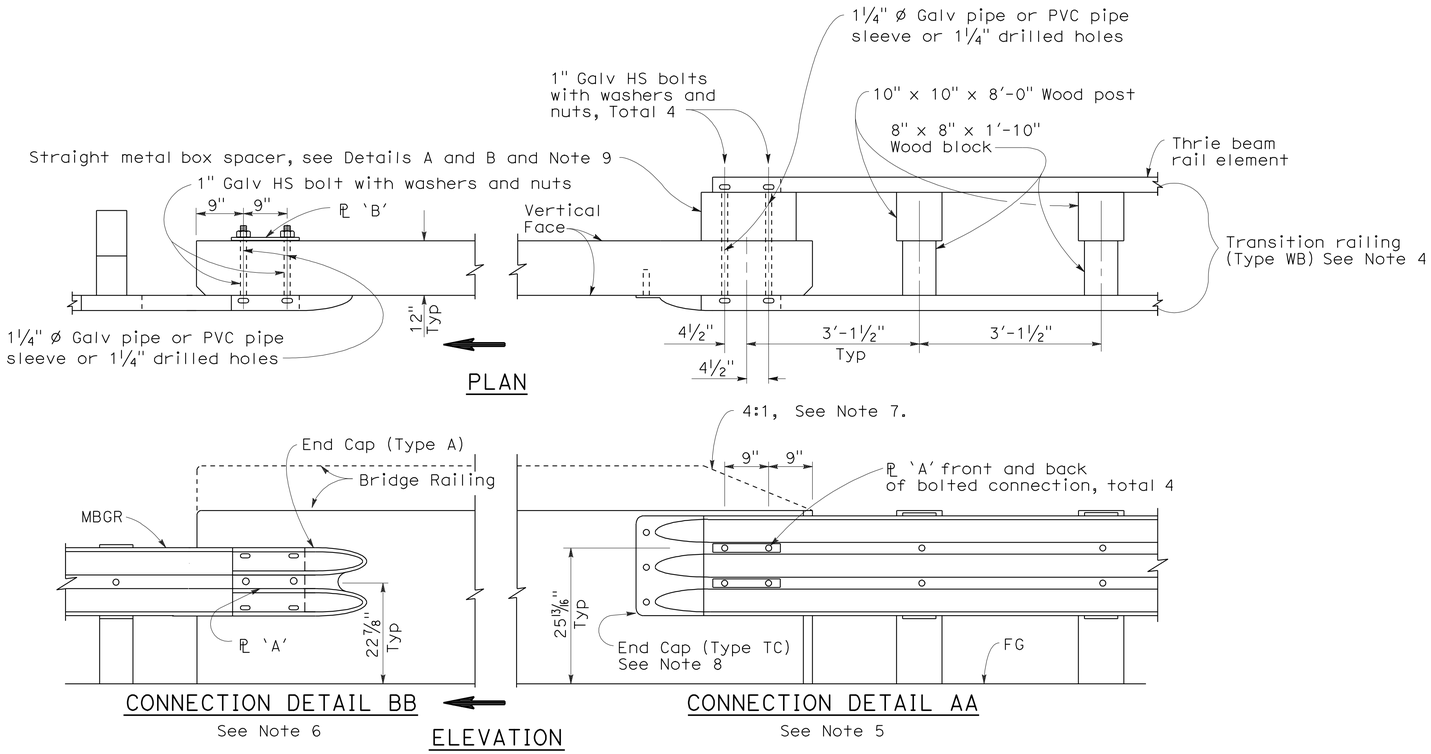


GUARD RAILING CONNECTION TO BRIDGE RAILING WITHOUT SIDEWALK

## NOTES:

1. See Revised Standard Plan RSP A77J2 for additional connection details to bridges without sidewalks.
2. Additional details of posts, blocks and hardware are shown on Standard Plan A77B1, A77C1 and A77C2.
3. Direction of adjacent traffic indicated by ➡.
4. For additional details of Transition Railing (Type WB), see Standard Plan A77J4. Transition Railing (Type WB) transitions the 12 gage w-beam standard railing section of guard railing to a heavier gage nested thrie beam railing section which is connected to the concrete bridge railing.
5. For typical use of Connection Detail AA, see Layout Types 12A and 12B on Revised Standard Plan RSP A77F1, Layout Types 12C and 12D on Standard Plan A77F2, and Layout Type 12E on Revised Standard Plan RSP A77F3.
6. For typical use of Connection Detail BB, see Layout Type 12D (structure departure railing connection) on Standard Plan A77F2 and Layout Type 12DD on Standard Plan A77F5.
7. Where the height of the bridge railing exceeds the height of the thrie beam railing by more than 1" at Connection Detail AA, taper the top of the end of the bridge railing at 4:1 to match the top elevation of the thrie beam rail.
8. For details of End Cap (Type TC), see Standard Plan A77J4.
9. See Standard Plan A77J4 for additional details regarding depth dimension for straight metal box spacer.

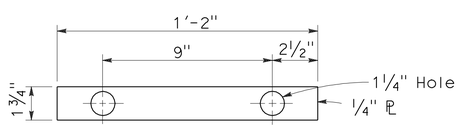


PLATE 'A'

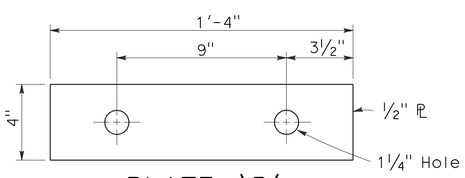


PLATE 'B'
(For backside of connection BB)

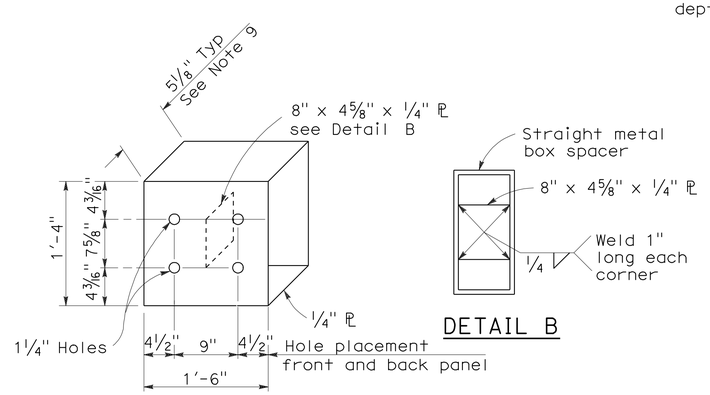


DETAIL A

DETAIL B

STRAIGHT METAL BOX SPACER

STATE OF CALIFORNIA
DEPARTMENT OF TRANSPORTATION

# METAL BEAM GUARD RAILING CONNECTIONS TO BRIDGE RAILINGS WITHOUT SIDEWALKS DETAILS No.1

NO SCALE

RSP A77J1 DATED MAY 20, 2011 SUPERSEDES RSP A77J1 DATED JUNE 6, 2008 AND STANDARD PLAN A77J1 DATED MAY 1, 2006 - PAGE 72 OF THE STANDARD PLANS BOOK DATED MAY 2006.

**REVISED STANDARD PLAN RSP A77J1**

**2006 REVISED STANDARD PLAN RSP A77J1**

3-10-11

| Dist | COUNTY | ROUTE | POST MILES TOTAL PROJECT | SHEET No. | TOTAL SHEETS |
|---|---|---|---|---|---|
| 12 | Ora | 91 | R0.0/R10.1 | 267 | 294 |

Randell D. Hiatt
REGISTERED CIVIL ENGINEER

May 20, 2011
PLANS APPROVAL DATE

REGISTERED PROFESSIONAL ENGINEER Randell D. Hiatt No. C50200 Exp. 6-30-11 CIVIL STATE OF CALIFORNIA

*To accompany plans dated* 6-20-11

*The State of California or its officers or agents shall not be responsible for the accuracy or completeness of electronic copies of this plan sheet.*

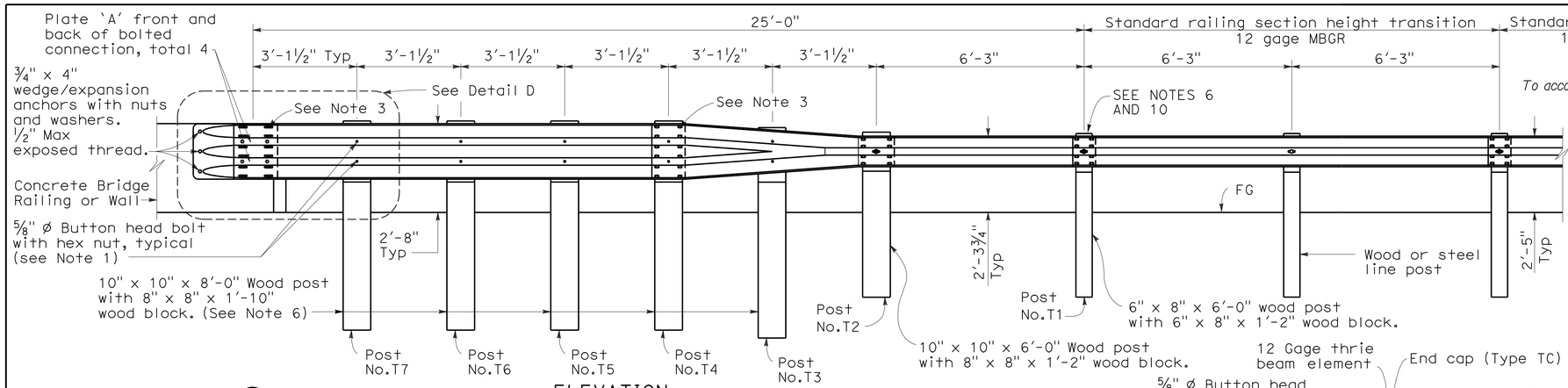


ELEVATION

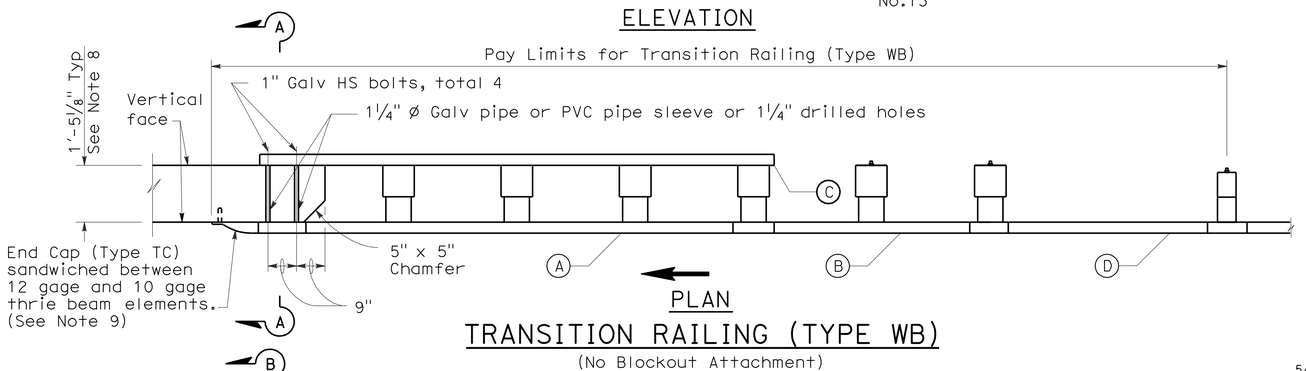


PLAN

TRANSITION RAILING (TYPE WB)

(No Blockout Attachment)

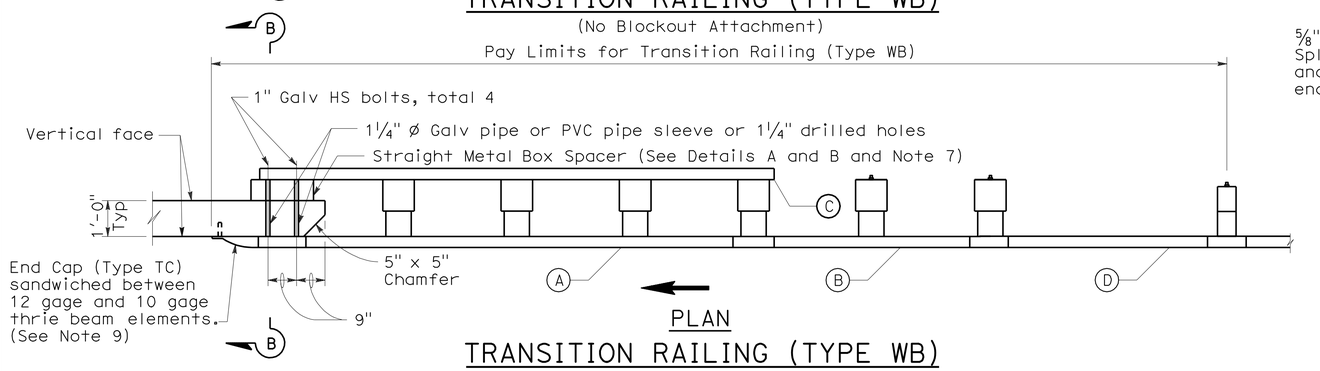


PLAN

TRANSITION RAILING (TYPE WB)

(Blockout Attachment)

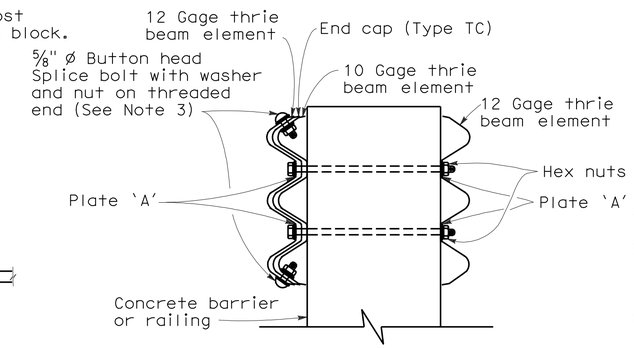


SECTION A-A

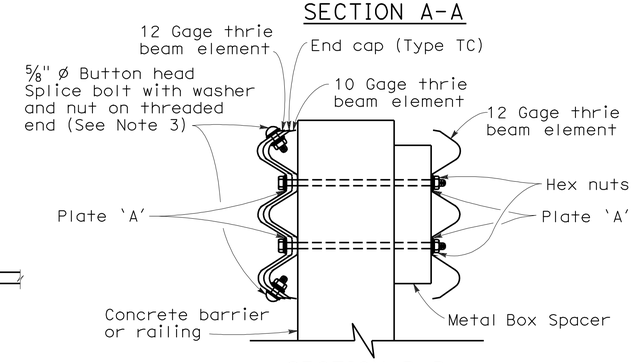


SECTION B-B

## NOTES:

1. Use ⅝" ø Button head bolts and hex nuts for connections to posts. No washer on rail face for bolted connections to post.
2. The nested rail elements, end cap, and 'W' beam to thrie beam element may be spliced together prior to bolting the elements to the wood post and concrete barrier or railing.
3. Exterior splice bolt holes for rail element splices at Post No. T4 and the connection to the concrete barrier or railing shall be the standard 29/32" x 1⅛" slot size. Interior splice bolt holes at these locations may be increased up to 1¼" ø. Only the top 2 and the bottom 2 splice bolts with washers and nuts are required for rail splices at Post No. T4 and the connection to the concrete barrier or railing.
4. Direction of adjacent traffic indicated by ⟶.
5. The top elevation of Posts No. T2 through No. T7 shall not project more than 1" above the top elevation of the rail element.
6. Typically, the railing connected to Transition Railing (Type WB) will be either standard railing section of metal beam guard railing with height transition ratio of 120:1 or an approved Caltrans end treatment attached to Post No. T1.
7. The depth of the metal box spacer varies from the 5⅛" to 1½" and is dependent on the width of the concrete railing or wall. The combined dimension for the depth of the metal box spacer plus the width of railing or wall is typically 17⅛". Where the space between the backside of the concrete railing or wall and the rear thrie beam element is less than 1½", metal plates similar to Plate 'A' are to be used as spacers.
8. Where the width of the concrete railing or wall is greater than 17⅛", wood blocks are to be used to fill the space created between the backside of Posts No. T4 through No. T7 and the rear thrie beam element. These wood blocks shall be 8" in width and 1'-2" in length. The dimension between the front thrie beam element and the rear thrie beam element is to match the width of the concrete railing or wall.
9. End cap may be installed over 12 gage and 10 gage thrie beam elements where transition railing is installed on the departure end of bridge railing.
10. Conform standard railing section height to 2'-3¾" at Post No. T1 using height transition ratio of 120:1.

## LEGEND

(A) Nested thrie beam elements (one 12 gage element nested over one 10 gage element).

(B) One 10 gage "W" beam to thrie beam element.

(C) One 12 gage thrie beam element.

(D) One 10 gage "W" beam rail element (7'-3½" length)

10 gage = 0.135" thick

12 gage = 0.108" thick

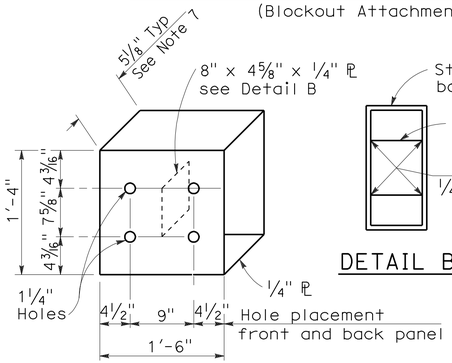


DETAIL A

STRAIGHT METAL BOX SPACER

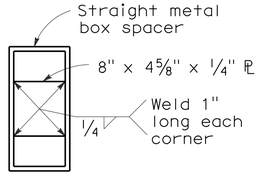


DETAIL B

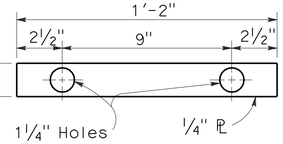


DETAIL C

PLATE 'A'

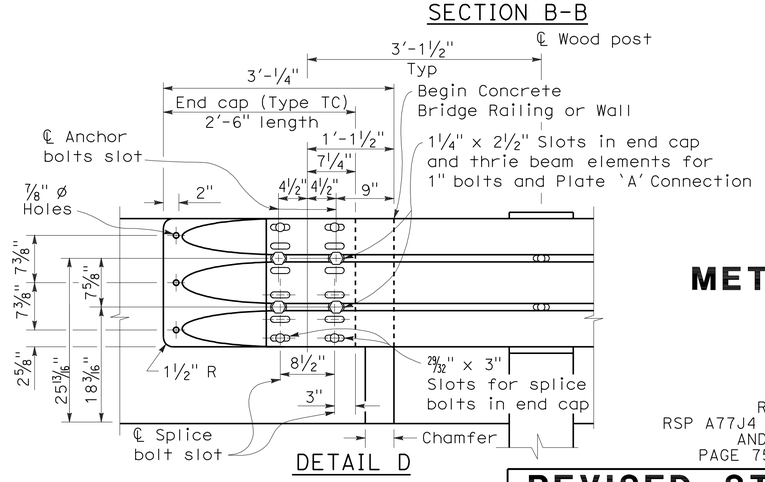


DETAIL D

STATE OF CALIFORNIA
DEPARTMENT OF TRANSPORTATION

# METAL BEAM GUARD RAILING TRANSITION RAILING (TYPE WB)

NO SCALE

RSP A77J4 DATED MAY 20, 2011 SUPERSEDES
RSP A77J4 DATED JUNE 5, 2009, RSP A77J4 DATED JUNE 6, 2008
AND STANDARD PLAN A77J4 DATED MAY 1, 2006 -
PAGE 75 OF THE STANDARD PLANS BOOK DATED MAY 2006.

**REVISED STANDARD PLAN RSP A77J4**

**2006 REVISED STANDARD PLAN RSP A77J4**

5-14-09

| DIST | COUNTY | ROUTE | POST MILES TOTAL PROJECT | SHEET NO. | TOTAL SHEETS |
|---|---|---|---|---|---|
| 12 | Ora | 91 | R0.0/R10.1 | 268 | 294 |

REGISTERED CIVIL ENGINEER

September 1, 2006
PLANS APPROVAL DATE

REGISTERED PROFESSIONAL ENGINEER — Hector David Cordova — No. C41957 — Exp. 3-31-08 — CIVIL — STATE OF CALIFORNIA

*The State of California or its officers or agents shall not be responsible for the accuracy or completeness of electronic copies of this plan sheet.*

*To accompany plans dated* 6-20-11

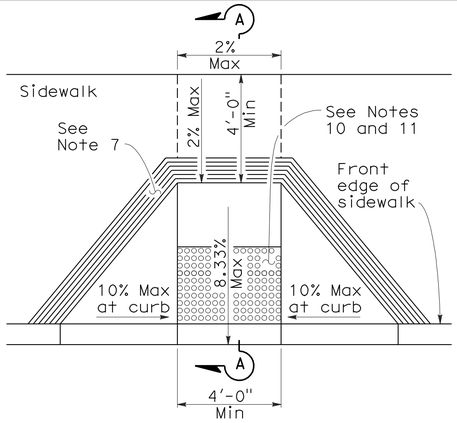


CASE A

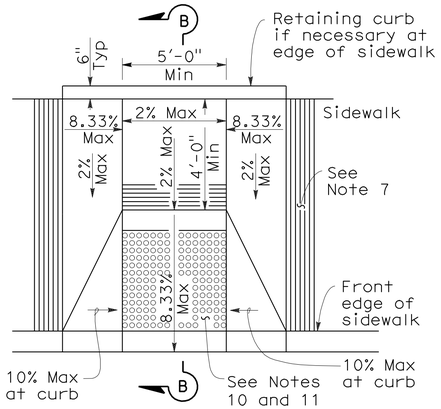


CASE B

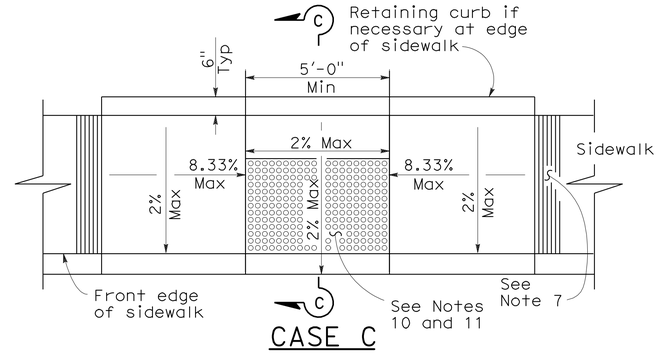


CASE C

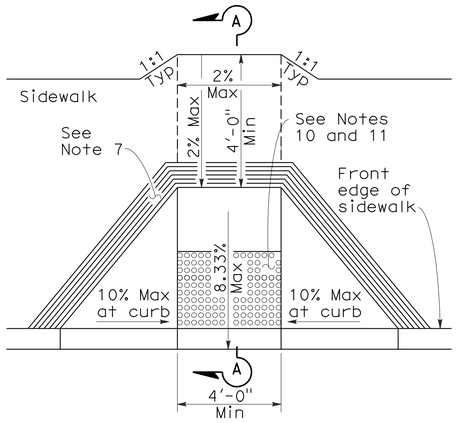


CASE D

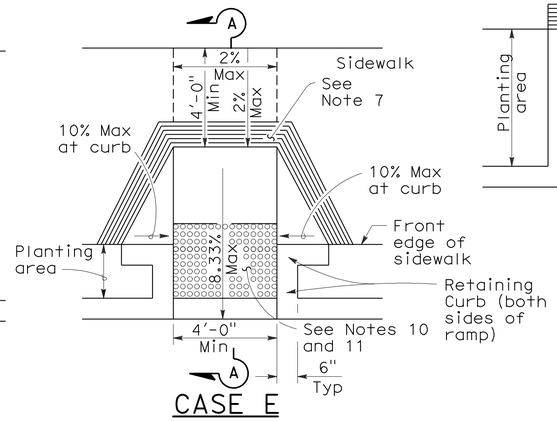


CASE E

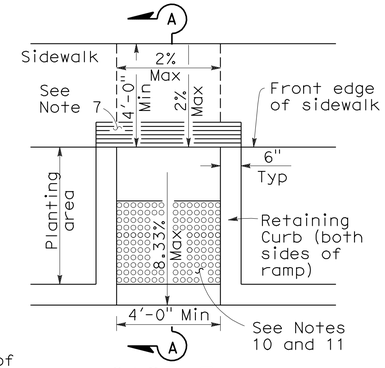


CASE F

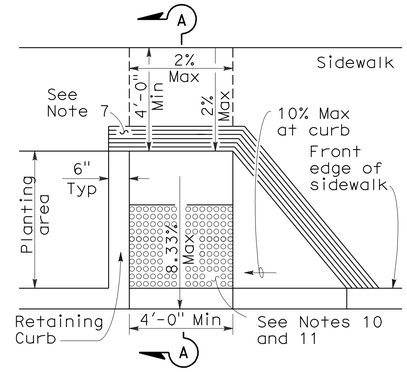


CASE G

See Note 4

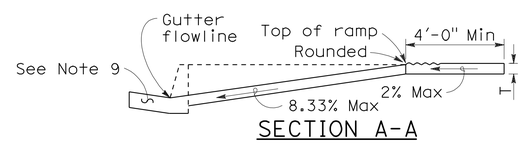


SECTION A-A

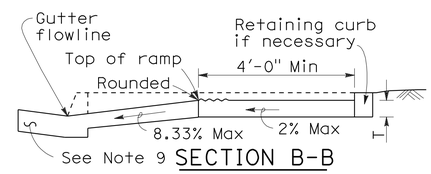


SECTION B-B

Depress entire sidewalk as required

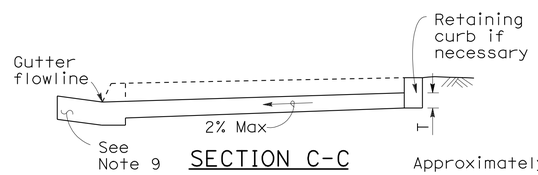


SECTION C-C

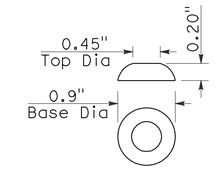


RAISED TRUNCATED DOME

## NOTES:

1. As site conditions dictate, Case A through Case G curb ramps may be used for corner installations similar to those shown in Detail A and Detail B. The case of curb ramps used in Detail A do not have to be the same. Case A through Case G curb ramps also may be used at mid block locations, as site conditions dictate.
2. If distance from curb to back of sidewalk is too short to accommodate ramp and 4'-0" platform (landing) as shown in Case A, the sidewalk may be depressed longitudinally as in Case B, or C or may be widened as in Case D.
3. When ramp is located in center of curb return, crosswalk configuration must be similar to that shown for Detail B.
4. As site conditions dictate, the retaining curb side and the flared side of the Case G ramp shall be constructed in reversed position.
5. If located on a curve, the sides of the ramp need not be parallel, but the minimum width of the ramp shall be 4'-0".
6. Side slope of ramp flares vary uniformly from a maximum of 10% at curb to conform with longitudinal sidewalk slope adjacent to top of the ramp, except in Case C and Case F.
7. The curb ramp shall be outlined, as shown, with a 1'-0" wide border with 1/4" grooves approximately 3/4" on center. See grooving detail.
8. Transitions from ramps and landing to walks, gutters or streets shall be flush and free of abrupt changes.
9. Maximum slopes of adjoining gutters, the road surface immediately adjacent to the curb ramp or accessible route shall not exceed 5 percent within 4'-0" of the top and bottom of the curb ramp.
10. Curb ramps shall have a detectable warning surface that extends the full width and 3'-0" depth of the ramp. Detectable Warning Surfaces shall conform to the details on this plan and the requirements in the Special Provisions.
11. The edge of the detectable warning surface nearest the street shall be between 6" and 8" from the gutter flowline.
12. Sidewalk and ramp thickness, "T", shall be 3 1/2" minimum.
13. Utility pull boxes, manholes, vaults and all other utility facilities within the boundaries of the curb ramp will be relocated or adjusted to grade by the owner prior to, or in conjunction with, curb ramp construction.
14. For retrofit conditions, removal and replacement of curb apron will be at the Contractor's option, unless otherwise shown on project plans.

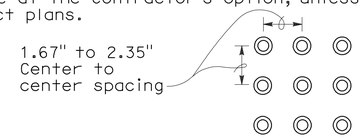


RAISED TRUNCATED DOME PATTERN (IN-LINE)

DETECTABLE WARNING SURFACE

See Note 10

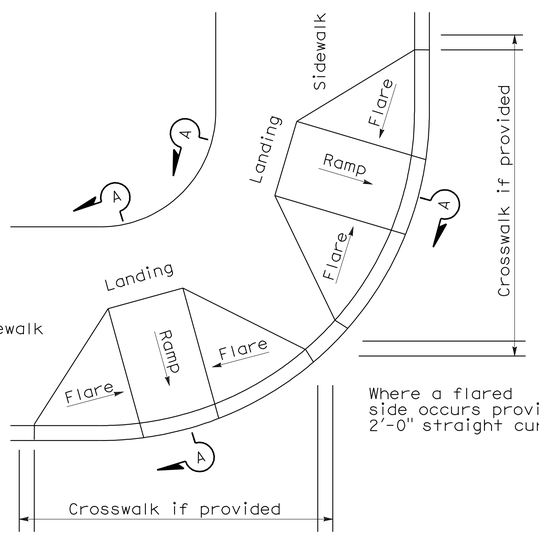


DETAIL A

TYPICAL TWO-RAMP CORNER INSTALLATION

See Note 1

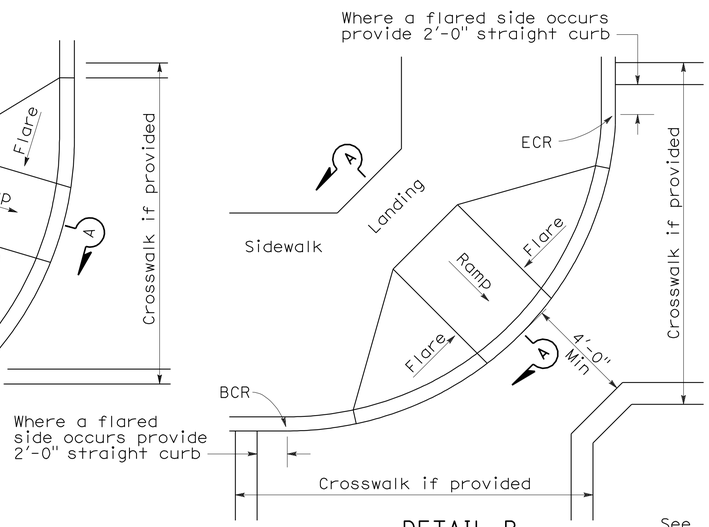


DETAIL B

TYPICAL ONE-RAMP CORNER INSTALLATION

See Notes 1 and 3

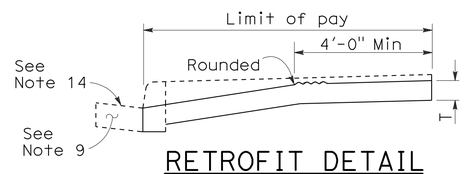


RETROFIT DETAIL

Existing curb and sidewalk

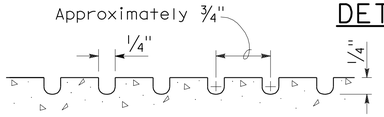


GROOVING DETAIL

STATE OF CALIFORNIA
DEPARTMENT OF TRANSPORTATION

# CURB RAMP DETAILS

NO SCALE

RSP A88A DATED SEPTEMBER 1, 2006 SUPERSEDES STANDARD PLAN A88A DATED MAY 1, 2006 - PAGE 115 OF THE STANDARD PLANS BOOK DATED MAY 2006.

**REVISED STANDARD PLAN RSP A88A**

**2006 REVISED STANDARD PLAN RSP A88A**

8-3-06

| DIST | COUNTY | ROUTE | POST MILES TOTAL PROJECT | SHEET NO. | TOTAL SHEETS |
|---|---|---|---|---|---|
| 12 | Ora | 91 | R0.0/R10.1 | 269 | 294 |

William K. Farnbach
REGISTERED CIVIL ENGINEER

May 15, 2009
PLANS APPROVAL DATE

REGISTERED PROFESSIONAL ENGINEER William K. Farnbach No. C49042 Exp. 9-30-10 CIVIL STATE OF CALIFORNIA

*The State of California or its officers or agents shall not be responsible for the accuracy or completeness of electronic copies of this plan sheet.*

*To accompany plans dated* 6-20-11

# 2006 REVISED STANDARD PLAN RSP P1

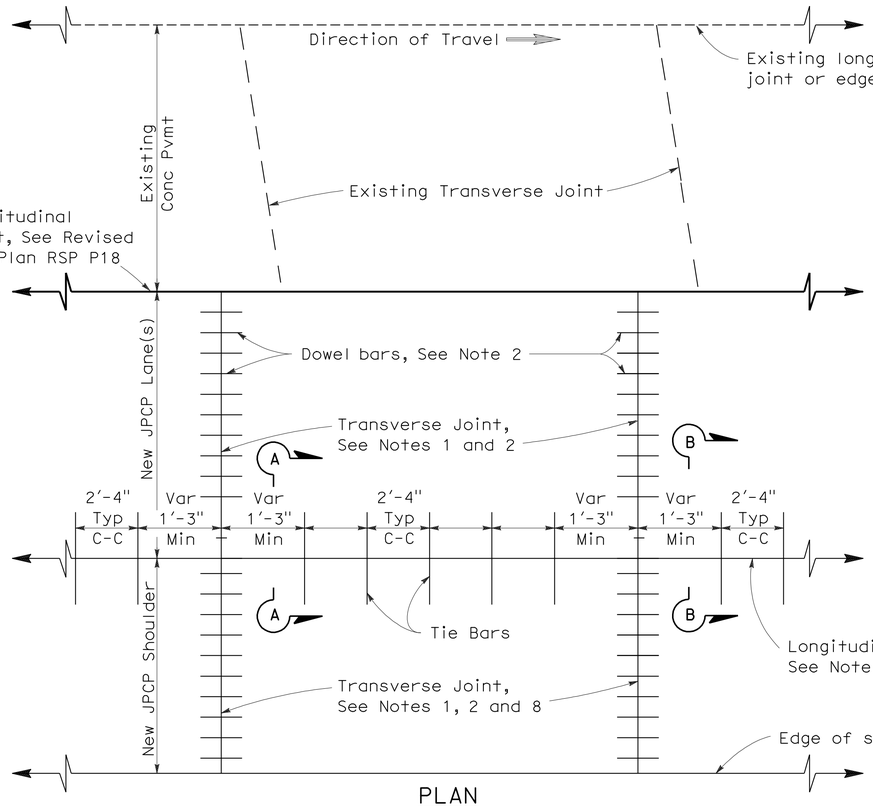


PLAN

LANE/SHOULDER ADDITION OR RECONSTRUCTION

See Notes 6 and 7

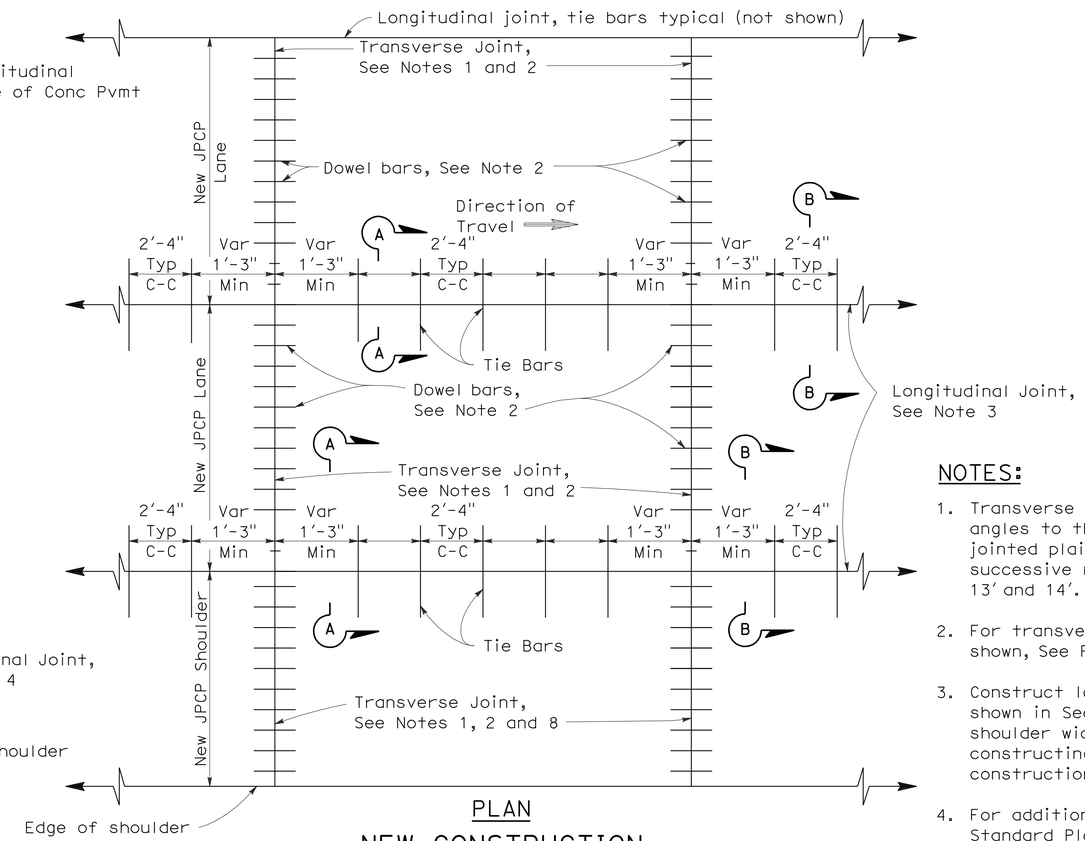


PLAN

NEW CONSTRUCTION

See Notes 6 and 7

## NOTES:

1. Transverse joints shall be constructed at right angles to the longitudinal pavement joints in new jointed plain concrete pavement and spaced at successive repeated intervals of 12', 15', 13' and 14'.
2. For transverse joint and dowel bar details not shown, See Revised Standard Plan RSP P10.
3. Construct longitudinal contraction joints as shown in Section A-A when more than one lane or shoulder widths are placed at one time. If constructing one lane at a time, use longitudinal construction joint, as shown in Section B-B.
4. For additional longitudinal joint details, see Revised Standard Plan RSP P18.
5. If fresh concrete is placed adjacent to existing concrete, the top corner of the new hardened concrete does not need to be rounded to the 1/4" radius as shown.
6. Joint spacing patterns do not apply to intersections.
7. Details can also apply to inside widening.
8. Dowel bars may be omitted from shoulders when the shoulder cross slope is not the same as the adjacent traffic lane.

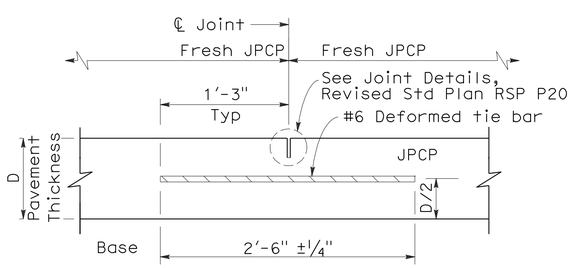


SECTION A-A

LONGITUDINAL CONTRACTION JOINT

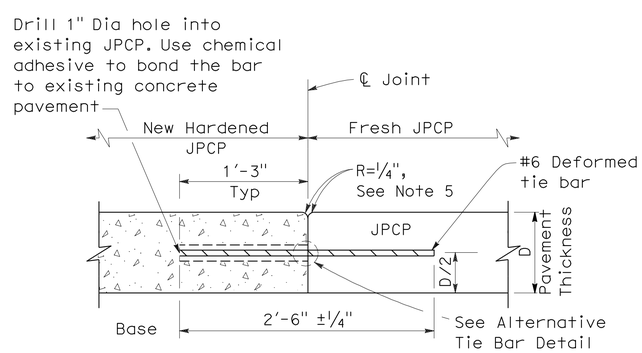


SECTION B-B

LONGITUDINAL CONSTRUCTION JOINT

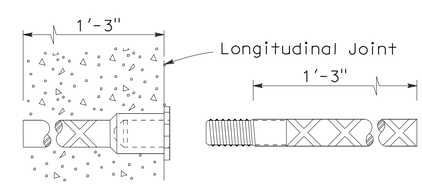


ALTERNATIVE TIE BAR SPLICE DETAIL

(Splice Coupler)

TIE BAR DETAILS

STATE OF CALIFORNIA
DEPARTMENT OF TRANSPORTATION

**JOINTED PLAIN CONCRETE PAVEMENT**

NO SCALE

RSP P1 DATED MAY 15, 2009 SUPERSEDES STANDARD PLAN P1
DATED MAY 1, 2006 - PAGE 119 OF THE STANDARD PLANS BOOK DATED MAY 2006.

**REVISED STANDARD PLAN RSP P1**

5-8-09

| DIST | COUNTY | ROUTE | POST MILES TOTAL PROJECT | SHEET NO. | TOTAL SHEETS |
|---|---|---|---|---|---|
| 12 | Ora | 91 | R0.0/R10.1 | 270 | 294 |

William K. Farnbach
REGISTERED CIVIL ENGINEER

May 15, 2009
PLANS APPROVAL DATE

REGISTERED PROFESSIONAL ENGINEER William K. Farnbach No. C49042 Exp. 9-30-10 CIVIL STATE OF CALIFORNIA

*The State of California or its officers or agents shall not be responsible for the accuracy or completeness of electronic copies of this plan sheet.*

*To accompany plans dated* 6-20-11

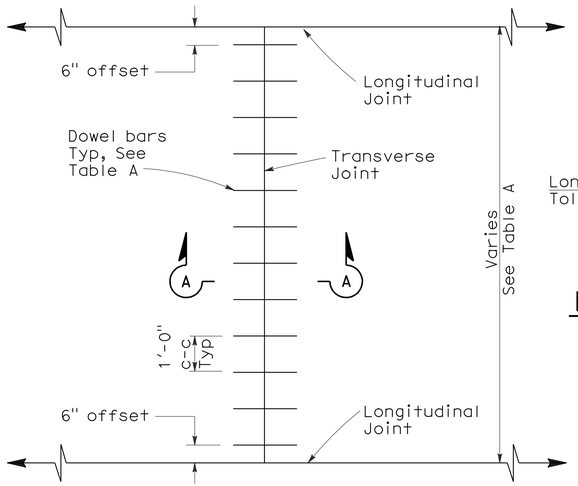


TRANSVERSE JOINT DOWEL BAR LAYOUT

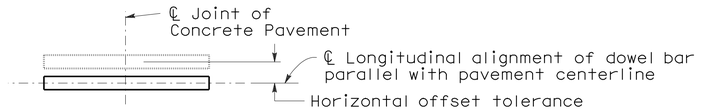


PLAN

HORIZONTAL OFFSET TOLERANCE

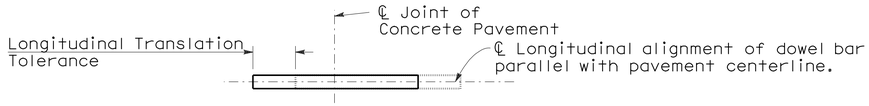


PLAN

LONGITUDINAL TRANSLATION TOLERANCE

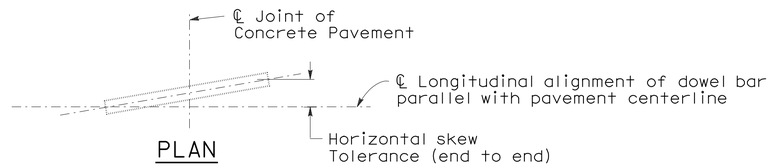


PLAN

HORIZONTAL SKEW TOLERANCE

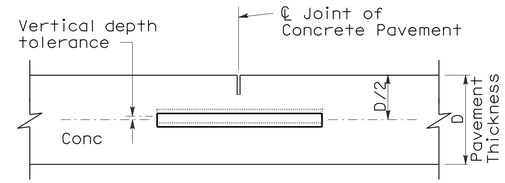


ELEVATION

VERTICAL DEPTH TOLERANCE

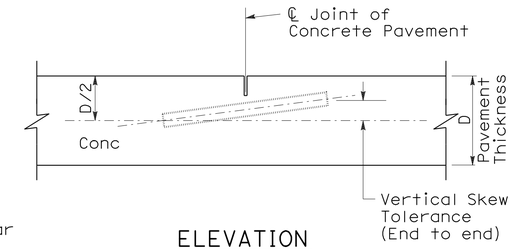


ELEVATION

VERTICAL SKEW TOLERANCE

## NOTES:

1. See Revised Standard Plan RSP P1 for typical dowel bar placement and locations.
2. 1½" Dia smooth dowel bars are to be used with a pavement thickness, D, equal to or greater than 0.70 feet. For pavement thickness, D, less than 0.70 feet, use 1¼" Dia smooth dowel bars.
3. For widths not shown, see Project Plans.
4. If fresh concrete pavement is placed adjacent to existing concrete pavement, the top corner of the existing concrete pavement does not need to be rounded to the ¼" radius, as shown.

TABLE A (See Note 3)

| Dowel Bar Transverse Spacing Table | |
|---|---|
| Width between Longitudinal Joints | Number of Dowels between Longitudinal Joints |
| 14'-0" | 14 |
| 13'-0" | 13 |
| 12'-0" | 12 |
| 11'-0" | 11 |
| 10'-0" | 10 |
| 8'-0" | 8 |
| 5'-0" | 5 |
| 4'-0" | 4 |

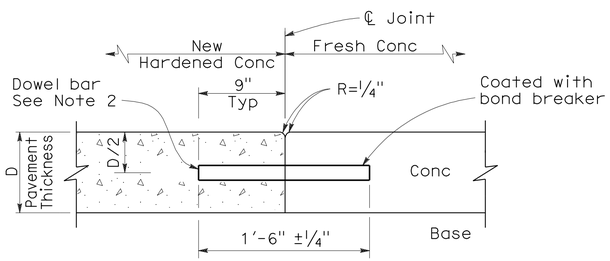


SECTION A-A

TRANSVERSE CONSTRUCTION JOINT DETAIL

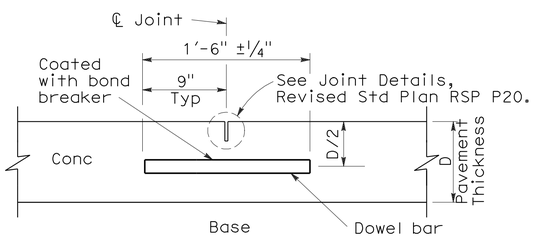


TRANSVERSE CONTRACTION JOINT

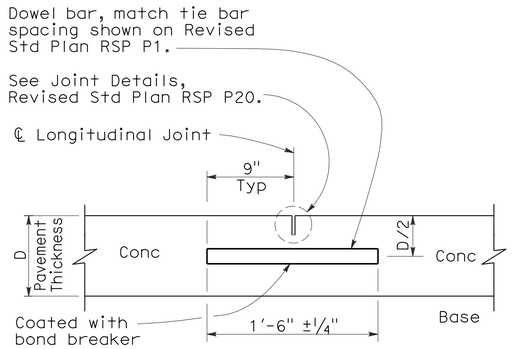


LONGITUDINAL CONTRACTION JOINT WITH DOWEL BARS

(See Revised Std Plan RSP P18)

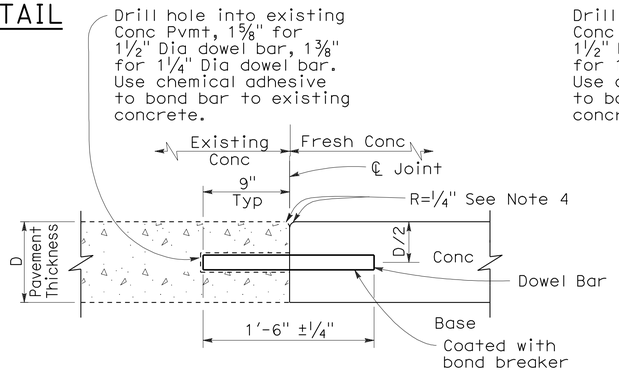


TRANSVERSE CONSTRUCTION JOINT FOR EXISTING CONCRETE PAVEMENT

(Drill and bond locations)

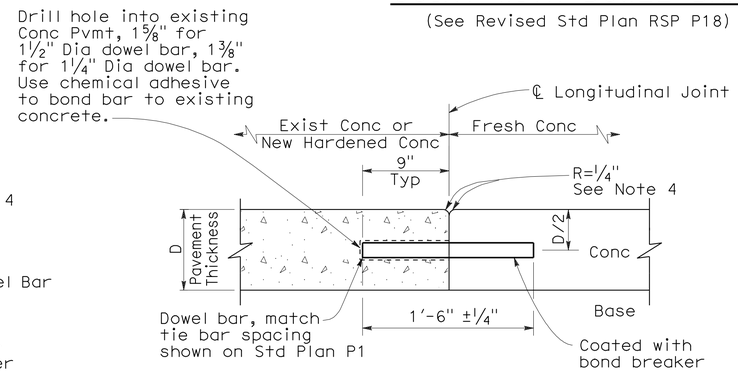


LONGITUDINAL CONSTRUCTION JOINT WITH DOWEL BARS

(See Revised Std Plan RSP P18)

STATE OF CALIFORNIA
DEPARTMENT OF TRANSPORTATION

# CONCRETE PAVEMENT-DOWEL BAR DETAILS

NO SCALE

RSP P10 DATED MAY 15, 2009 SUPERSEDES STANDARD PLAN P10 DATED MAY 1, 2006 - PAGE 124 OF THE STANDARD PLANS BOOK DATED MAY 2006.

**REVISED STANDARD PLAN RSP P10**

**2006 REVISED STANDARD PLAN RSP P10**

5-8-09

NOTE:

1. Tie bars, dowel bars, and reinforcement are not shown in joint seal details, see Revised Standard Plans RSP P1, RSP P3, RSP P10, RSP P35, RSP P45, or RSP P46 as applicable.

| DIST | COUNTY | ROUTE | POST MILES TOTAL PROJECT | SHEET NO. | TOTAL SHEETS |
|---|---|---|---|---|---|
| 12 | Ora | 91 | R0.0/R10.1 | 271 | 294 |

William K. Farnbach
REGISTERED CIVIL ENGINEER

May 15, 2009
PLANS APPROVAL DATE

REGISTERED PROFESSIONAL ENGINEER
William K. Farnbach
No. C49042
Exp. 9-30-10
CIVIL
STATE OF CALIFORNIA

*The State of California or its officers or agents shall not be responsible for the accuracy or completeness of electronic copies of this plan sheet.*

*To accompany plans dated* 6-20-11

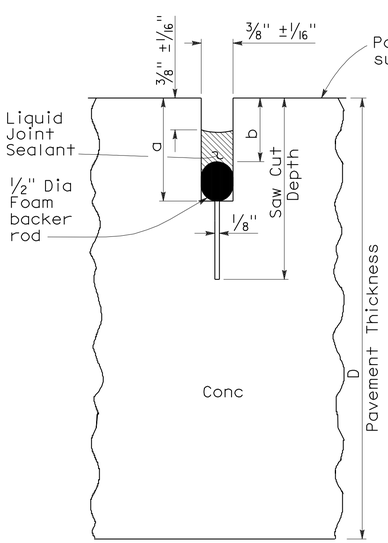


LIQUID SEALANT

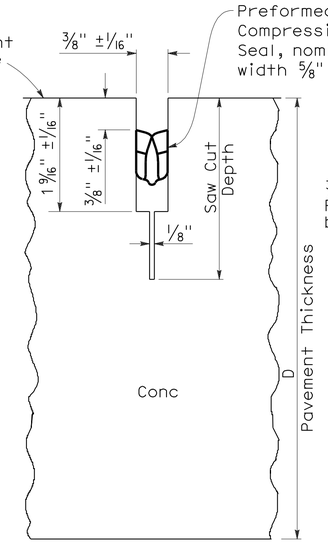


COMPRESSION SEAL

## TYPE A1

Transverse Contraction Joints

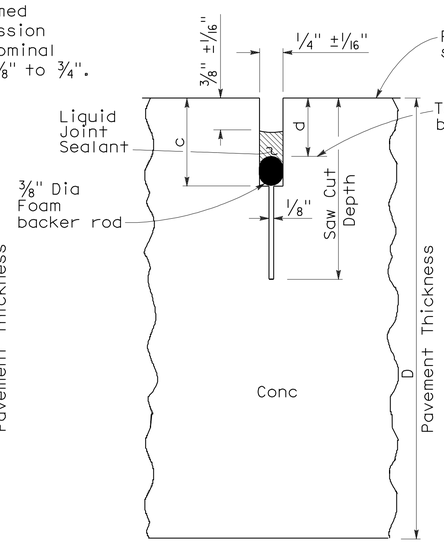


LIQUID SEALANT

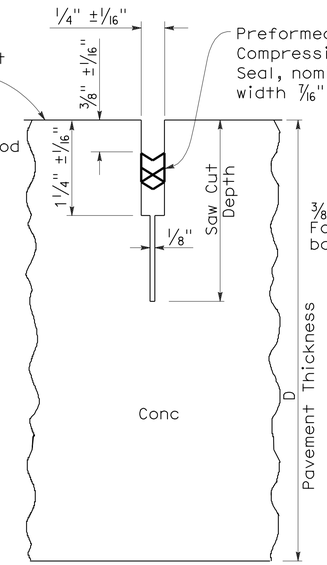


COMPRESSION SEAL

## TYPE A2

Longitudinal Contraction Joints

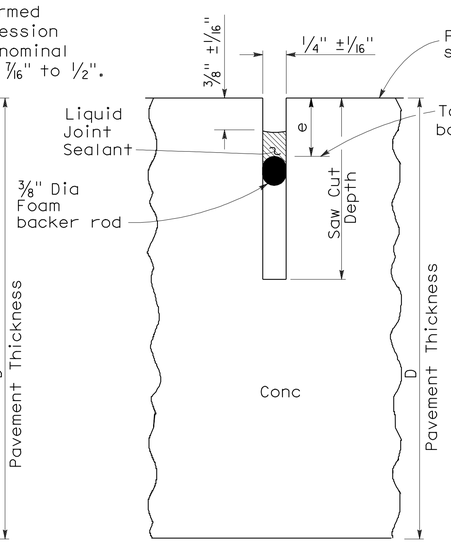


LIQUID SEALANT

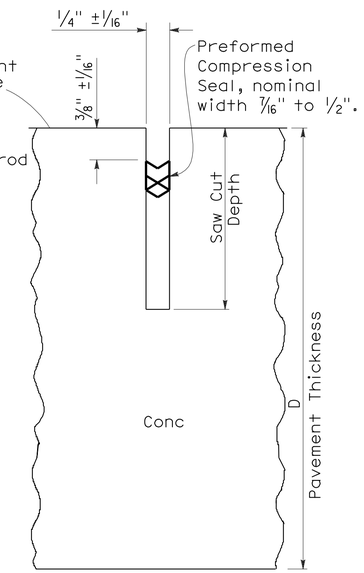


COMPRESSION SEAL

## TYPE B

Longitudinal or Transverse Contraction Joint

### LIQUID SEALANT RESERVOIR DEPTH

| LIQUID SEALANT MATERIAL | 3/8" Joint Width Type A1 | | 1/4" Joint Width Type A2 | | 1/4" Joint Width Type B |
|---|---|---|---|---|---|
| | DIMENSION | | DIMENSION | | DIMENSION |
| | a | b | c | d | e |
| SILCONE | 1" ±1/16" | 5/8" ±1/16" | 15/16" ±1/16" | 9/16" ±1/16" | 9/16" ±1/16" |
| ASPHALT RUBBER | 1 3/16" ±1/16" | 3/4" ±1/16" | 1 1/16" ±1/16" | 11/16" ±1/16" | 11/16" ±1/16" |

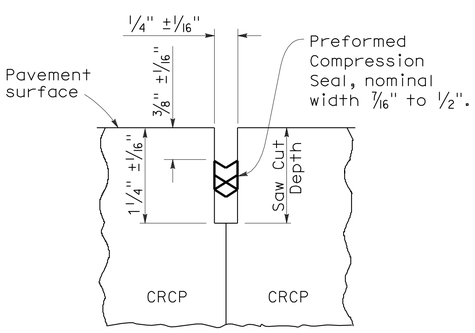


COMPRESSION SEAL

## TYPE C

Transverse and Longitudinal Construction Joints (For CRCP)

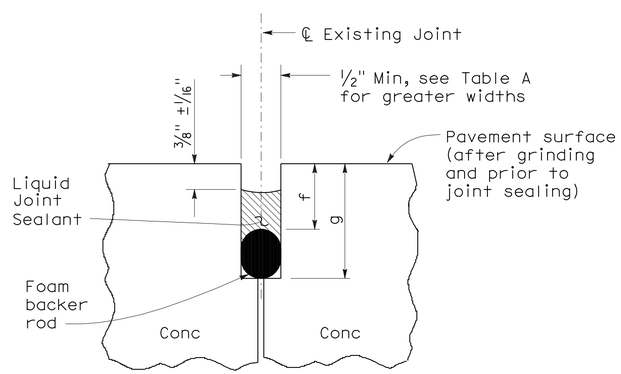


LIQUID SEALANT

## TYPE R

Retrofit Transverse and Longitudinal Joints

### TABLE A (TYPE R JOINT)

| Sawn Joint Width | Backer Rod Diameter ± 1/16" | DIMENSION "f" | DIMENSION "g" |
|---|---|---|---|
| 1" | 1 5/16" | 7/8" | 2 1/4" |
| 7/8" | 1 3/16" | 13/16" | 2" |
| 3/4" | 1" | 3/4" | 1 3/4" |
| 5/8" | 7/8" | 11/16" | 1 1/2" |
| 1/2" | 11/16" | 5/8" | 1 1/4" |

STATE OF CALIFORNIA
DEPARTMENT OF TRANSPORTATION

# CONCRETE PAVEMENT-JOINT DETAILS

NO SCALE

RSP P20 DATED MAY 15, 2009 SUPERSEDES STANDARD PLAN P20
DATED MAY 1, 2006 - PAGE 128 OF THE STANDARD PLANS BOOK DATED MAY 2006.

**REVISED STANDARD PLAN RSP P20**

**2006 REVISED STANDARD PLAN RSP P20**

5-8-09

| DIST | COUNTY | ROUTE | POST MILES TOTAL PROJECT | SHEET NO. | TOTAL SHEETS |
|---|---|---|---|---|---|
| 12 | Ora | 91 | R0.0/R10.1 | 272 | 294 |

Randell D. Hiatt
REGISTERED CIVIL ENGINEER

June 6, 2008
PLANS APPROVAL DATE

REGISTERED PROFESSIONAL ENGINEER
Randell D. Hiatt
No. C50200
Exp. 6-30-09
CIVIL
STATE OF CALIFORNIA

*The State of California or its officers or agents shall not be responsible for the accuracy or completeness of electronic copies of this plan sheet.*

*To accompany plans dated* 6-20-11

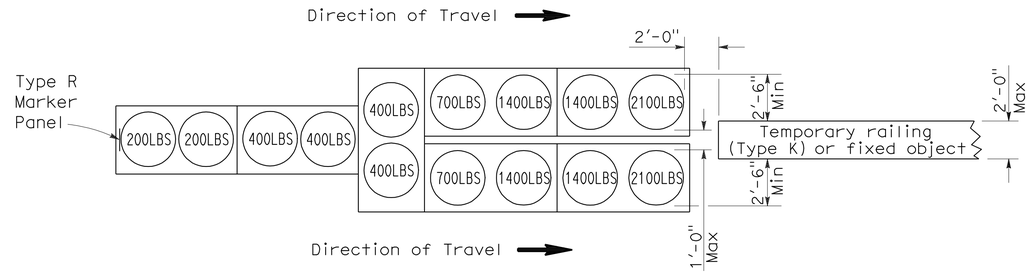


## ARRAY 'TU14'

Approach speed 45 mph or more

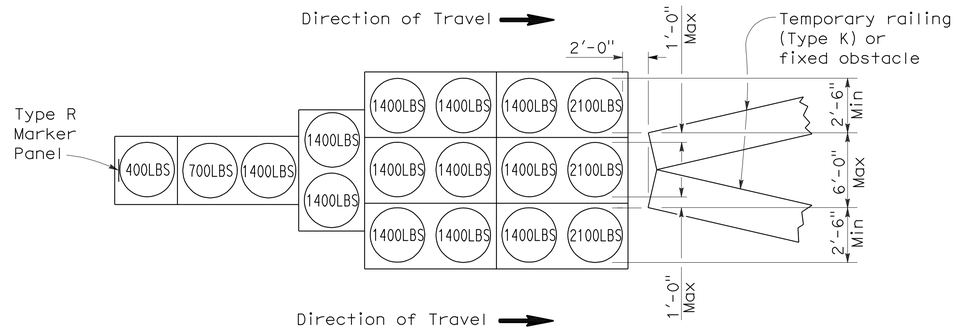


## ARRAY 'TU17'

Approach speed less than 45 mph

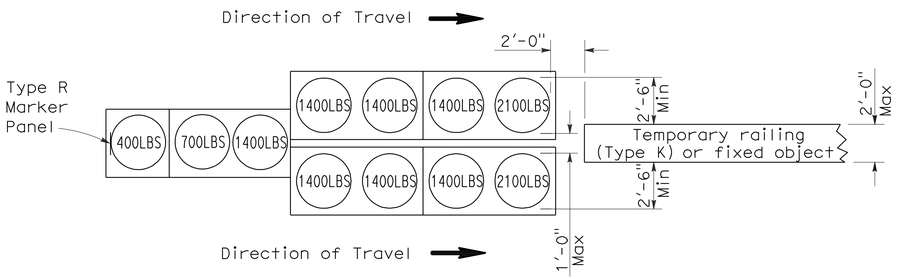


## ARRAY 'TU11'

Approach speed less than 45 mph

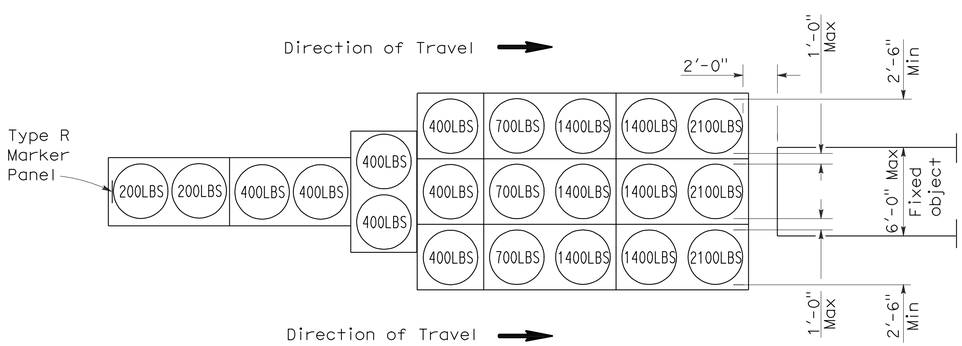


## ARRAY 'TU21'

Approach speed 45 mph or more

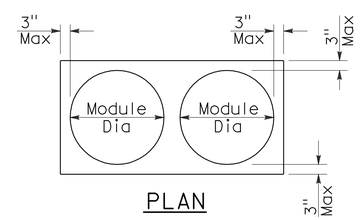


## PLAN

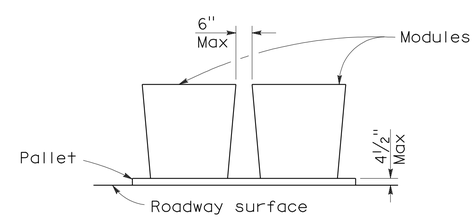


## ELEVATION

## CRASH CUSHION PALLET DETAIL

See Note 7

## NOTES:

1. (XXX) Indicates sand filled module location and weight of sand in pounds for each module. Module spacing is based on the greater diameter of the module.
2. All sand weights are nominal.
3. Temporary crash cushion arrays shall not encroach on the traveled way.
4. Place the top of Type R marker panel 1" below the module lid.
5. Refer to Standard Plan A73B for marker details.
6. Approach speeds indicated conform to NCHRP 350 Report criteria.
7. Use of pallets is optional.

STATE OF CALIFORNIA
DEPARTMENT OF TRANSPORTATION

# TEMPORARY CRASH CUSHION, SAND FILLED (UNIDIRECTIONAL)

NO SCALE

RSP T1A DATED JUNE 6, 2008 SUPERSEDES STANDARD PLAN T1A
DATED MAY 1, 2006 - PAGE 211 OF THE STANDARD PLANS BOOK DATED MAY 2006.

**REVISED STANDARD PLAN RSP T1A**

**2006 REVISED STANDARD PLAN RSP T1A**

5-15-08

| DIST | COUNTY | ROUTE | POST MILES TOTAL PROJECT | SHEET NO. | TOTAL SHEETS |
|---|---|---|---|---|---|
| 12 | Ora | 91 | R0.0/R10.1 | 273 | 294 |

Randell D. Hiatt
REGISTERED CIVIL ENGINEER

June 6, 2008
PLANS APPROVAL DATE

REGISTERED PROFESSIONAL ENGINEER
Randell D. Hiatt
No. C50200
Exp. 6-30-09
CIVIL
STATE OF CALIFORNIA

*The State of California or its officers or agents shall not be responsible for the accuracy or completeness of electronic copies of this plan sheet.*

*To accompany plans dated* 6-20-11

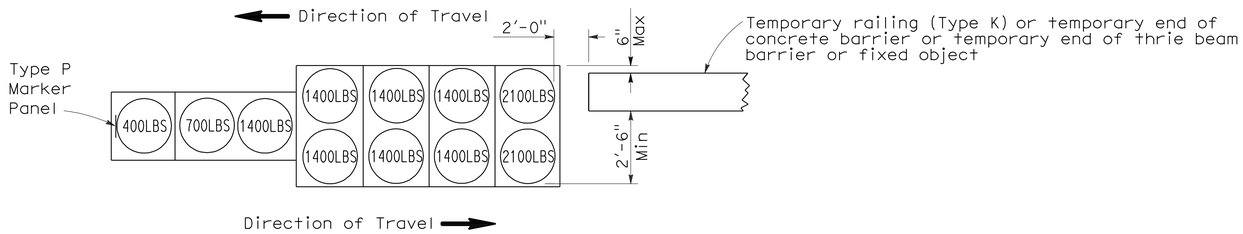


ARRAY 'TB11'

Approach speed less than 45 mph

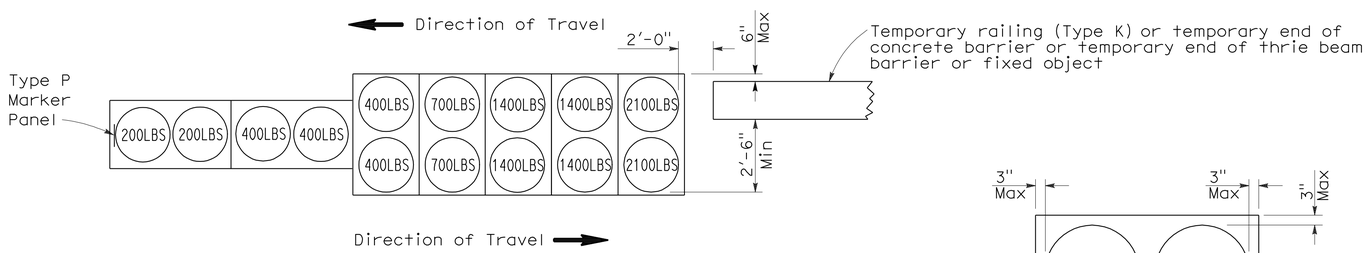


ARRAY 'TB14'

Approach speed 45 mph or more

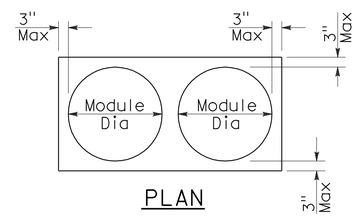


PLAN

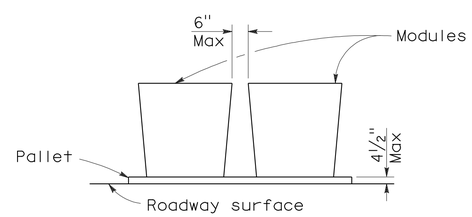


ELEVATION

CRASH CUSHION PALLET DETAIL

See Note 7

NOTES:

1. (XXX) Indicates sand filled module location and weight of sand in pounds for each module. Module spacing is based on the greater diameter of the module.
2. All sand weights are nominal.
3. Temporary crash cushion arrays shall not encroach on the traveled way.
4. Place the Type P marker panel so that the bottom of the panel rests upon the pallet.
5. Refer to Standard Plan A73B for marker details.
6. Approach speeds indicated conform to NCHRP 350 Report criteria.
7. Use of pallets is optional.

STATE OF CALIFORNIA
DEPARTMENT OF TRANSPORTATION

# TEMPORARY CRASH CUSHION, SAND FILLED (BIDIRECTIONAL)

NO SCALE

RSP T1B DATED JUNE 6, 2008 SUPERSEDES STANDARD PLAN T1B
DATED MAY 1, 2006 - PAGE 212 OF THE STANDARD PLANS BOOK DATED MAY 2006.

**REVISED STANDARD PLAN RSP T1B**

**2006 REVISED STANDARD PLAN RSP T1B**

5-15-08

| DIST | COUNTY | ROUTE | POST MILES TOTAL PROJECT | SHEET NO. | TOTAL SHEETS |
|---|---|---|---|---|---|
| 12 | Ora | 91 | R0.0/R10.1 | 274 | 294 |

Randell D. Hiatt
REGISTERED CIVIL ENGINEER

June 6, 2008
PLANS APPROVAL DATE

REGISTERED PROFESSIONAL ENGINEER
Randell D. Hiatt
No. C50200
Exp. 6-30-09
CIVIL
STATE OF CALIFORNIA

*The State of California or its officers or agents shall not be responsible for the accuracy or completeness of electronic copies of this plan sheet.*

*To accompany plans dated* 6-20-11

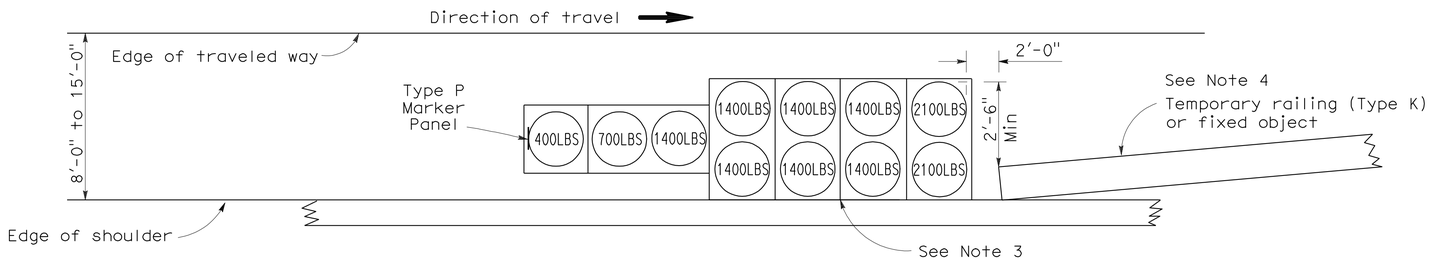


## ARRAY 'TS11'

Approach speed less than 45 mph
See Note 9

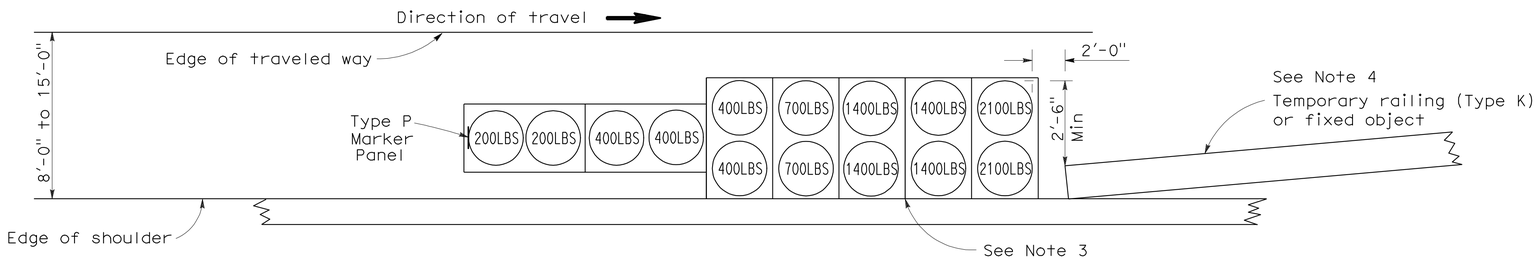


## ARRAY 'TS14'

Approach speed 45 mph or more
See Note 9

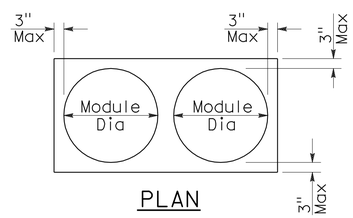


PLAN

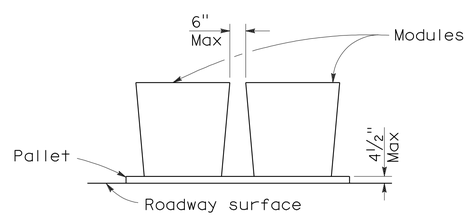


ELEVATION

## CRASH CUSHION PALLET DETAIL

See Note 11

## NOTES:

1. (XXX) Indicates sand filled module location and weight of sand in pounds for each module. Module spacing is based on the greater diameter of the module.
2. All sand weights are nominal.
3. The temporary crash cushion arrays shown on this plan shall be used only in locations where there will be traffic on one side of the temporary crash cushion array.
4. If the fixed object or approach end of the temporary railing is less than 15'-0" from the edge of traveled way, a temporary crash cushion is required in a construction or work zone.
5. Temporary crash cushion arrays shall not encroach on the traveled way.
6. Arrays for median shoulders shall conform to details shown on this plan for outside shoulders.
7. Place the Type P marker panel so that the bottom of the panel rests upon the pallet and faces traffic.
8. Refer to Standard Plan A73B for marker details.
9. For shoulder widths less than 8'-0", appropriate approved crash cushion protection, other than sand filled modules, shall be provided at fixed objects and at approach ends of temporary railing. The specific type of crash cushion shall be as shown on the project plans or as specified in the Special Provisions, or if not shown on the project plans or specified in the Special Provisions, shall be as approved by the Engineer.
10. Approach speeds indicated conform to NCHRP 350 Report criteria.
11. Use of pallets is optional.

STATE OF CALIFORNIA
DEPARTMENT OF TRANSPORTATION

# TEMPORARY CRASH CUSHION, SAND FILLED (SHOULDER INSTALLATIONS)

NO SCALE

RSP T2 DATED JUNE 6, 2008 SUPERSEDES STANDARD PLAN T2
DATED MAY 1, 2006 - PAGE 213 OF THE STANDARD PLANS BOOK DATED MAY 2006.

**REVISED STANDARD PLAN RSP T2**

**2006 REVISED STANDARD PLAN RSP T2**

5-15-08

| Dist | COUNTY | ROUTE | POST MILES TOTAL PROJECT | SHEET No. | TOTAL SHEETS |
|---|---|---|---|---|---|
| 12 | Ora | 91 | R0.0/R10.1 | 275 | 294 |

Randell D. Hiatt
REGISTERED CIVIL ENGINEER

May 20, 2011
PLANS APPROVAL DATE

REGISTERED PROFESSIONAL ENGINEER
Randell D. Hiatt
No. C50200
Exp. 6-30-11
CIVIL
STATE OF CALIFORNIA

*The State of California or its officers or agents shall not be responsible for the accuracy or completeness of electronic copies of this plan sheet.*

*To accompany plans dated* 6-20-11

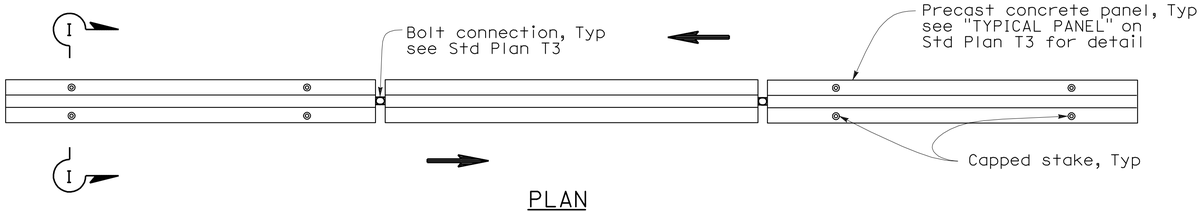


PLAN

RAILING STAKING CONFIGURATION FOR TWO-WAY TRAFFIC

See Note 1

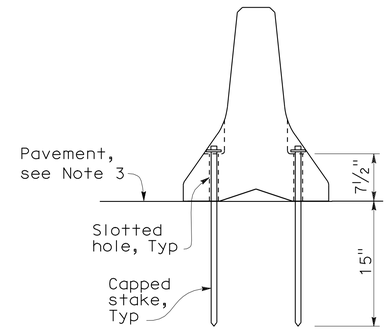


SECTION I-I

## NOTES:

1. Where Type K Temporary Railing is placed as a temporary or long term barrier in two-way traffic on highways with less than 24" from the edge of traveled way, use four capped stakes per every other panel with end panels staked.
2. Where Type K Temporary Railing is placed 3" to 24" from the edge of an excavation on highways, use two capped stakes per panel along the traffic side.
3. Staked Type K Temporary Railing must be supported by at least 4" thick concrete, hot mix asphalt or existing asphalt concrete pavement.
4. The minimum yield strength for the washer must be 60,000 psi.
5. Direction of adjacent traffic indicated by ⟹.

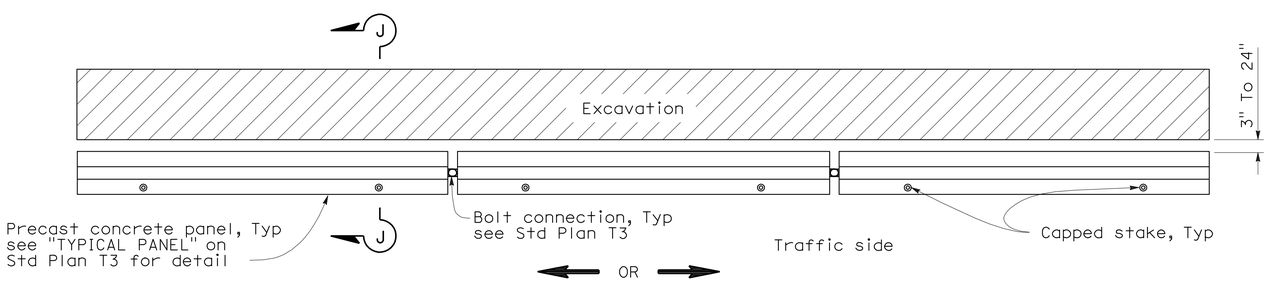


PLAN

RAILING STAKING CONFIGURATION ADJACENT TO AN EXCAVATION

See Note 2

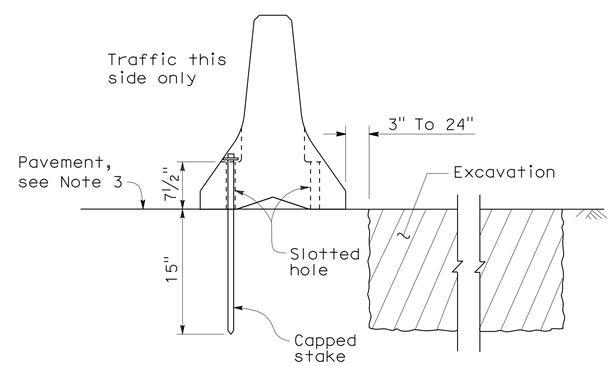


SECTION J-J

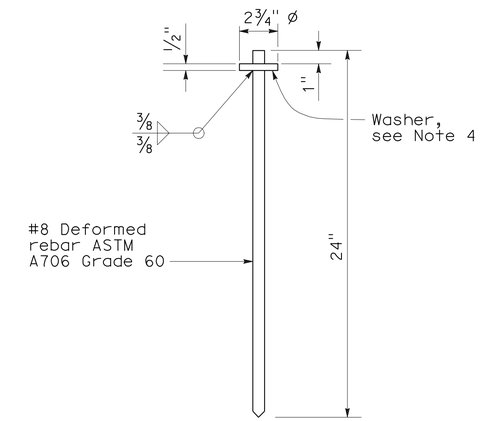


CAPPED STAKE DETAIL

STATE OF CALIFORNIA
DEPARTMENT OF TRANSPORTATION

# TEMPORARY RAILING (TYPE K)

NO SCALE

NSP T3A DATED MAY 20, 2011 SUPPLEMENTS
THE STANDARD PLANS BOOK DATED MAY 2006.

**NEW STANDARD PLAN NSP T3A**

2006 NEW STANDARD PLAN NSP T3A

| DIST | COUNTY | ROUTE | POST MILES TOTAL PROJECT | SHEET NO. | TOTAL SHEETS |
|---|---|---|---|---|---|
| 12 | Ora | 91 | R0.0/R10.1 | 276 | 294 |

REGISTERED CIVIL ENGINEER

November 17, 2006
PLANS APPROVAL DATE

REGISTERED PROFESSIONAL ENGINEER
Greg W. Edwards
No. C36386
Exp. 6-30-08
CIVIL
STATE OF CALIFORNIA

*The State of California or its officers or agents shall not be responsible for the accuracy or completeness of electronic copies of this plan sheet.*

*To accompany plans dated* 6-20-11

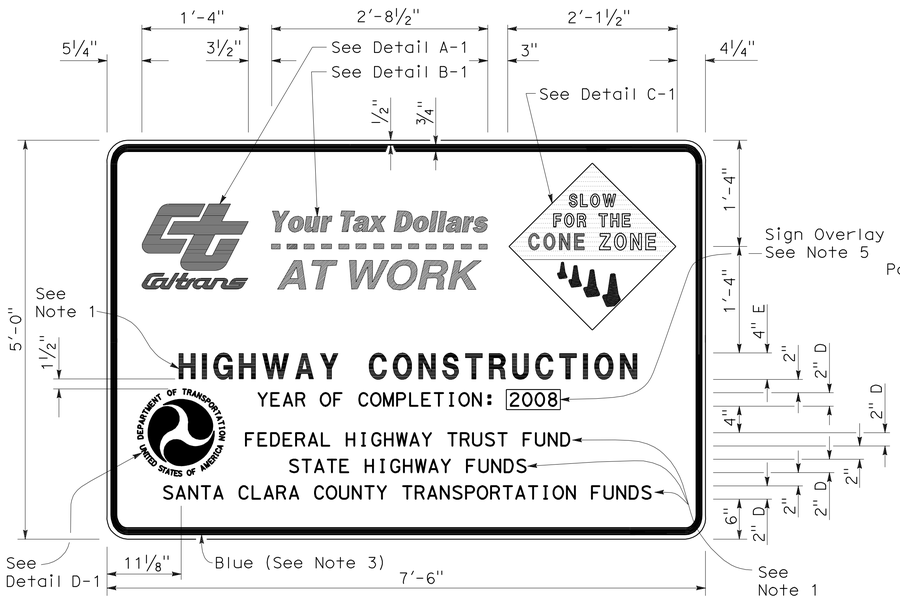


TYPE 1

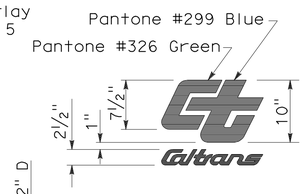


DETAIL A-1

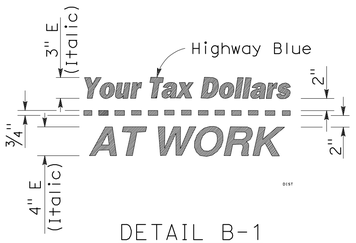


DETAIL B-1
(See Note 3)

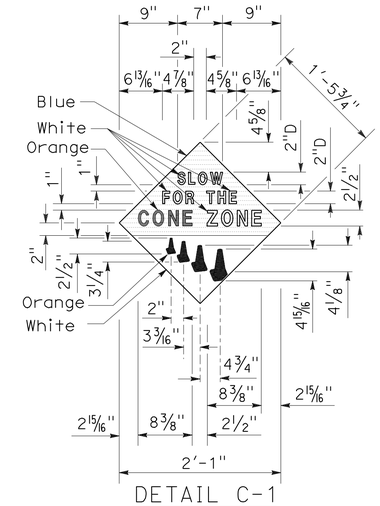


DETAIL C-1
(See Note 4)

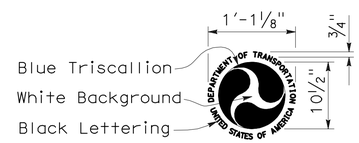


DETAIL D-1
(See Note 6)

## NOTES:

1. The sign messages shown for type of project and fund types are examples only. See the Special Provisions for the applicable type of project and fund type messages to be used.
2. Except as otherwise shown, the legend of sign shall be black on a white background (non-reflective).
3. The border of the signs and details "B-1" and "B-2" shall be blue (non-reflective).
4. The diamond in details "C-1" and "C-2" shall be blue for the background of message, " SLOW FOR THE CONE ZONE", and white background for the orange cones. The color and type of font for the "SLOW FOR THE CONE ZONE" message shall be: "SLOW" white D; "FOR THE" white D; "CONE" orange Arial font; "ZONE" white Arial font.
5. Year of completion of project construction shown on the overlay is an example only. See the Special Provisions.
6. Use when the Project involves Federal Highway Trust Fund.

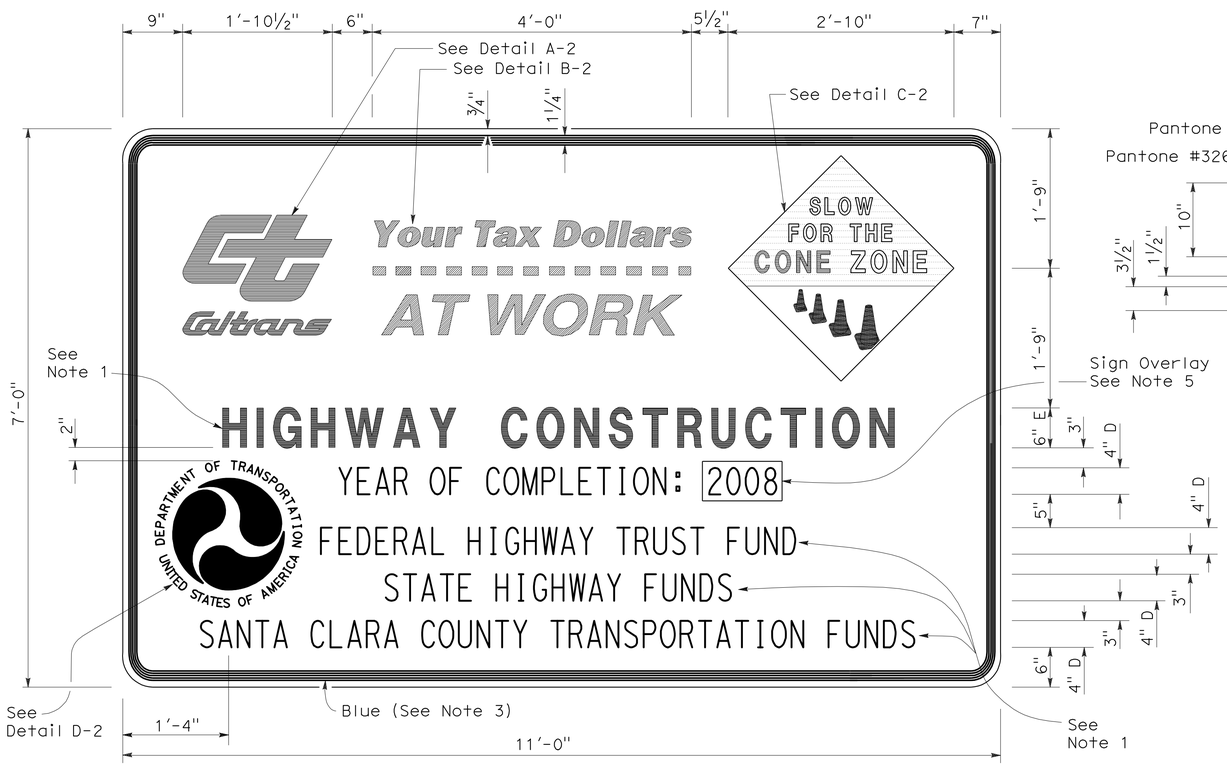


TYPE 2

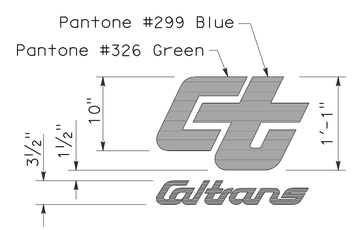


DETAIL A-2

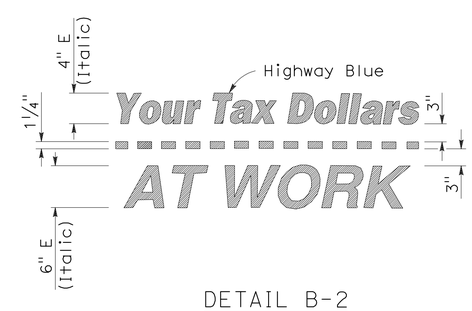


DETAIL B-2
(See Note 3)

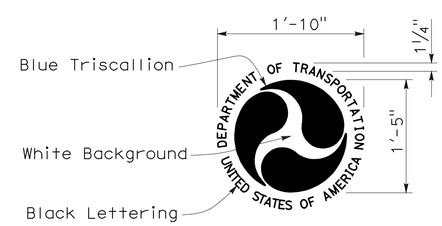


DETAIL D-2
(See Note 6)

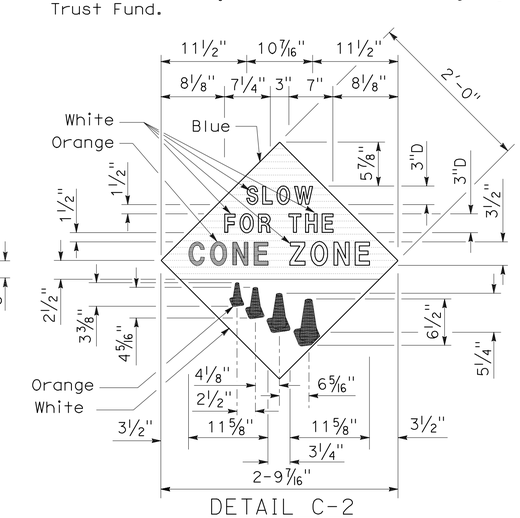


DETAIL C-2
(See Note 4)

STATE OF CALIFORNIA
DEPARTMENT OF TRANSPORTATION

# CONSTRUCTION PROJECT FUNDING IDENTIFICATION SIGNS

NO SCALE

RSP T7 DATED NOVEMBER 17, 2006 SUPERSEDES STANDARD PLAN T7
DATED MAY 1, 2006 - PAGE 217 OF THE STANDARD PLANS BOOK DATED MAY 2006.

**REVISED STANDARD PLAN RSP T7**

**2006 REVISED STANDARD PLAN RSP T7**

9-7-06

| DIST | COUNTY | ROUTE | POST MILES TOTAL PROJECT | SHEET NO. | TOTAL SHEETS |
|---|---|---|---|---|---|
| 12 | Ora | 91 | R0.0/R10.1 | 277 | 294 |

LICENSED LANDSCAPE ARCHITECT

August 15, 2008
PLANS Approval DATE

*The State of California or its officers or agents shall not be responsible for the accuracy or completeness of electronic copies of this plan sheet.*

LICENSED LANDSCAPE ARCHITECT Robert B. Schott 3895 Signature 11-04-08 Renewal Date 08-11-08 Date STATE OF CALIFORNIA

*To accompany plans dated* 6-20-11

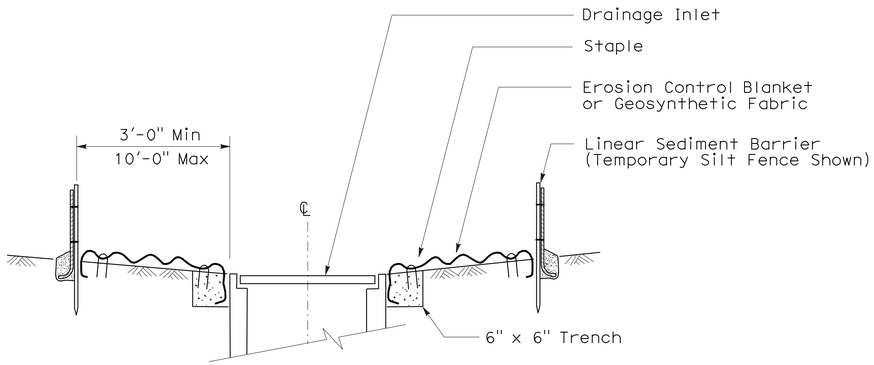


SECTION A-A

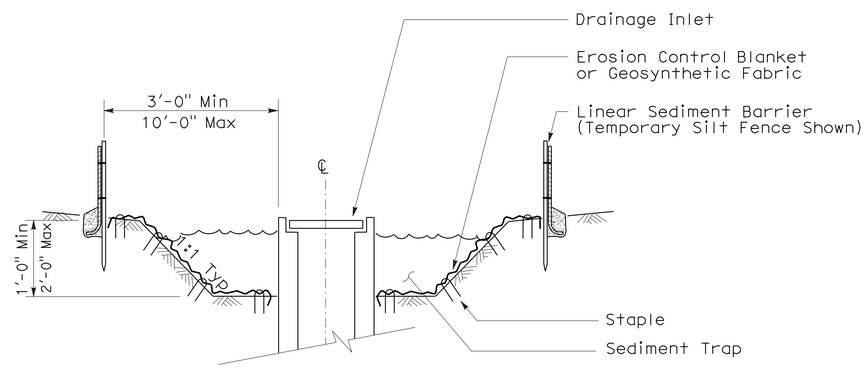


SECTION B-B

## NOTES:

1. See Standard Plan T51 for Temporary Silt Fence.
2. Dimensions may vary to fit field conditions.

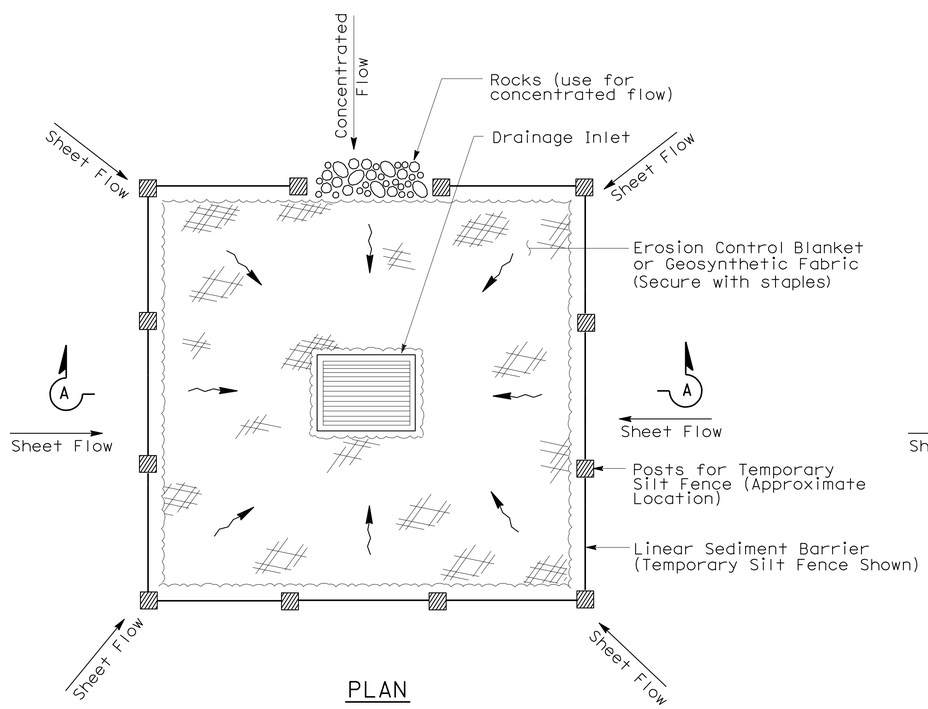


PLAN

TEMPORARY DRAINAGE INLET PROTECTION (TYPE 1)

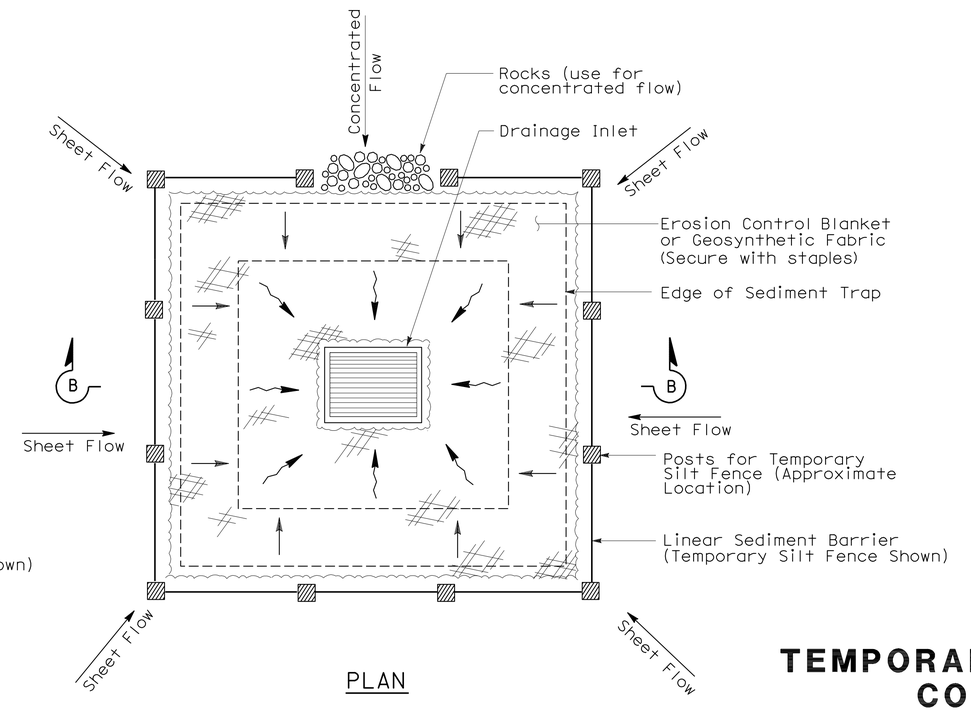


PLAN

TEMPORARY DRAINAGE INLET PROTECTION (TYPE 2) (EXCAVATED SEDIMENT TRAP)

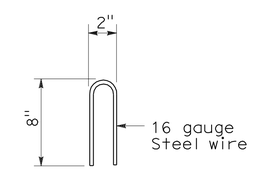


STAPLE DETAIL

STATE OF CALIFORNIA
DEPARTMENT OF TRANSPORTATION

# TEMPORARY WATER POLLUTION CONTROL DETAILS (TEMPORARY DRAINAGE INLET PROTECTION)

NO SCALE

NSP T61 DATED AUGUST 15, 2008 SUPPLEMENTS THE STANDARD PLANS BOOK DATED MAY 2006.

**NEW STANDARD PLAN NSP T61**

**2006 NEW STANDARD PLAN NSP T61**

7-11-08

| DIST | COUNTY | ROUTE | POST MILES TOTAL PROJECT | SHEET NO. | TOTAL SHEETS |
|---|---|---|---|---|---|
| 12 | Ora | 91 | R0.0/R10.1 | 278 | 294 |

LICENSED LANDSCAPE ARCHITECT

August 15, 2008
PLANS APPROVAL DATE

*The State of California or its officers or agents shall not be responsible for the accuracy or completeness of electronic copies of this plan sheet.*

LICENSED LANDSCAPE ARCHITECT — Robert B. Schott — Signature — 11-04-08 Renewal Date — 08-11-08 Date — STATE OF CALIFORNIA

*To accompany plans dated* 6-20-11

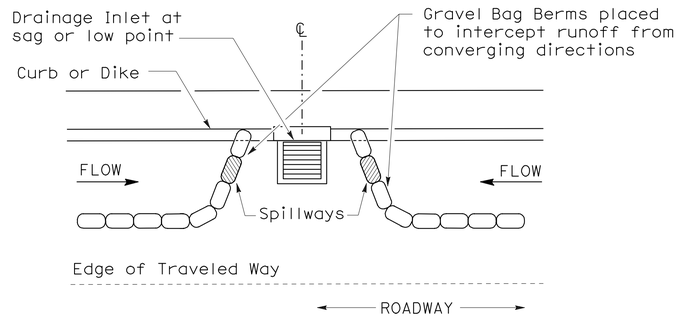


PLAN

## CONFIGURATION FOR SAG POINT INLET (GRAVEL BAG BERM)

## GRAVEL BAG BERM (TYPE 3A) SPACING TABLE

| SLOPE OF ROADWAY (PERCENT) | 1 to 3.9 | 4 to 5.9 | 6 to 7.9 | 8 to 10 | 10+ |
|---|---|---|---|---|---|
| INTERVAL BETWEEN BERM | 100′ | 75′ | 50′ | 25′ | 12′ |

For slope of less than 1%, install barriers only if erosion/sediment is prevalent

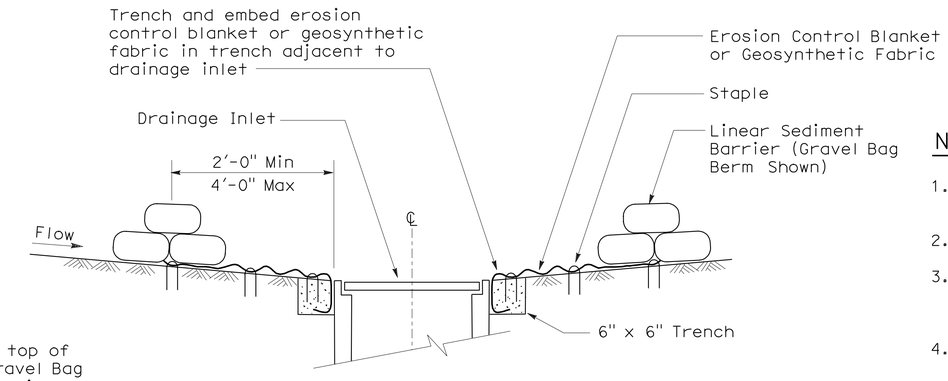


SECTION A-A

## NOTES:

1. Place safety cones adjacent to drainage inlet protection.
2. Dimensions may vary to fit field conditions.
3. Install a minimum of 3 gravel bag berms upstream of each drainage inlet to be protected.
4. Position erosion control blanket or geosynthetic fabric at edge of concrete apron and secure in trench.
5. Erosion control blanket or geosynthetic fabric is not required if the area adjacent to the drainage inlet is vegetated or paved.

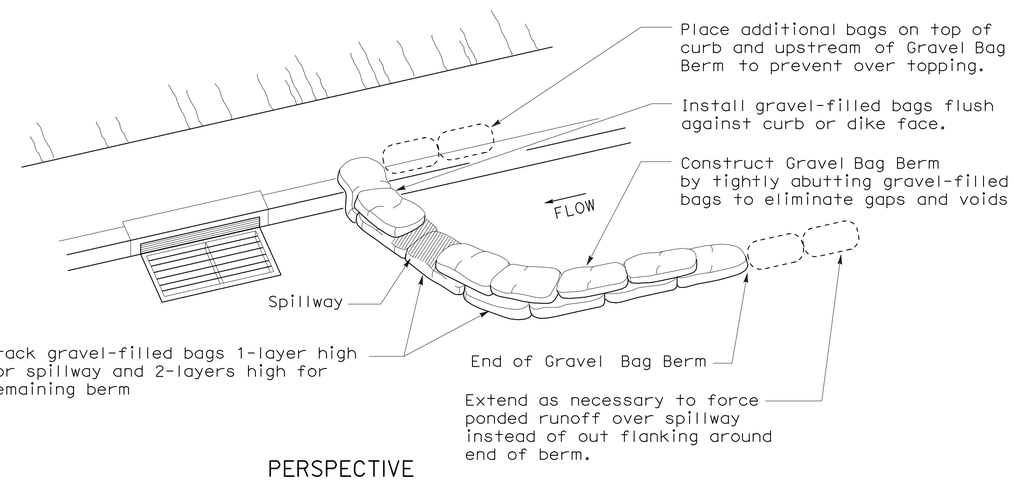


PERSPECTIVE

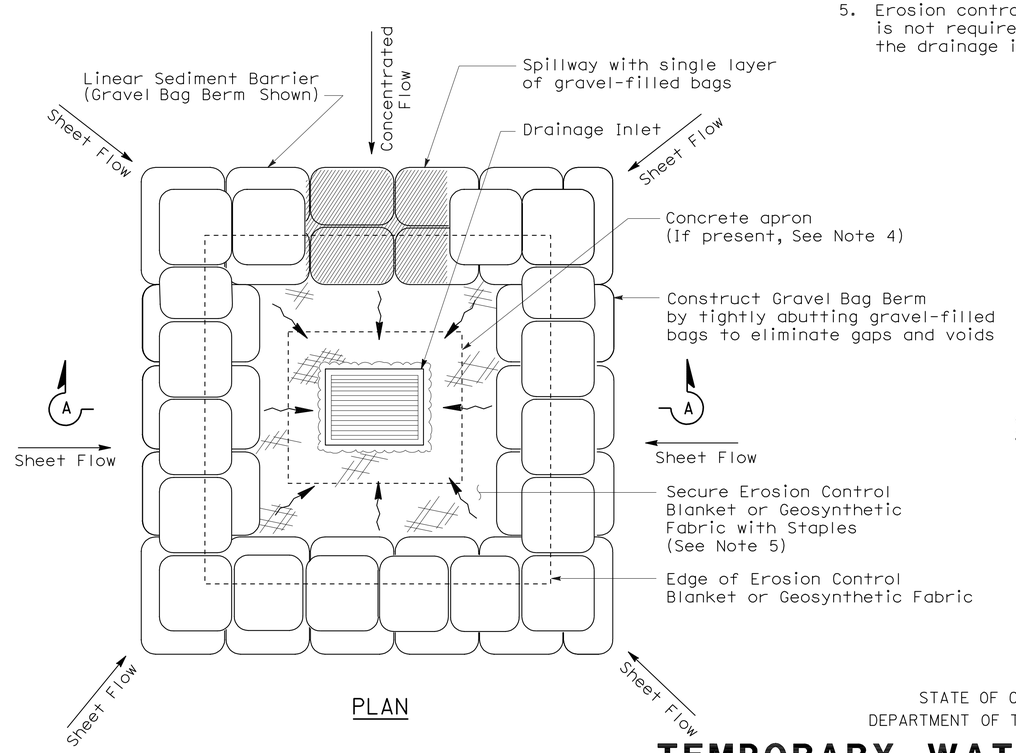


PLAN

## TEMPORARY DRAINAGE INLET PROTECTION (TYPE 3B)

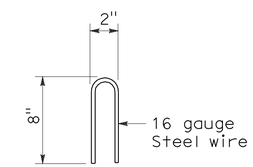


STAPLE DETAIL

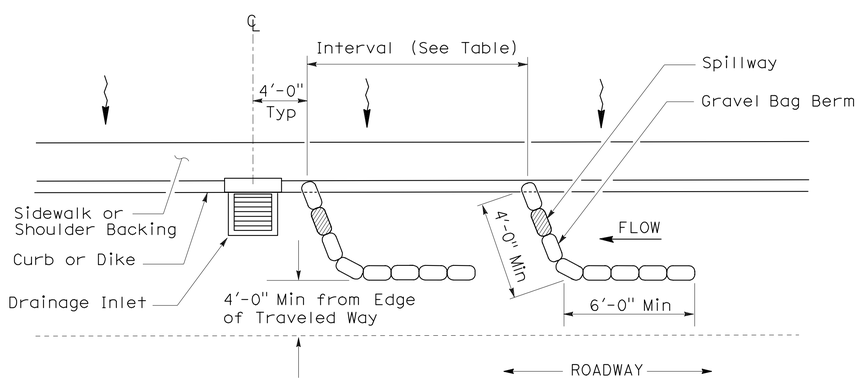


PLAN

## TEMPORARY DRAINAGE INLET PROTECTION (TYPE 3A) (GRAVEL BAG BERM)

STATE OF CALIFORNIA
DEPARTMENT OF TRANSPORTATION

# TEMPORARY WATER POLLUTION CONTROL DETAILS (TEMPORARY DRAINAGE INLET PROTECTION)

NO SCALE

NSP T62 DATED AUGUST 15, 2008 SUPPLEMENTS THE STANDARD PLANS BOOK DATED MAY 2006.

**NEW STANDARD PLAN NSP T62**

**2006 NEW STANDARD PLAN NSP T62**

7-11-08

| DIST | COUNTY | ROUTE | POST MILES TOTAL PROJECT | SHEET NO. | TOTAL SHEETS |
|---|---|---|---|---|---|
| 12 | Ora | 91 | R0.0/R10.1 | 279 | 294 |

Robert B Schott
LICENSED LANDSCAPE ARCHITECT

August 15, 2008
PLANS APPROVAL DATE

*The State of California or its officers or agents shall not be responsible for the accuracy or completeness of electronic copies of this plan sheet.*

LICENSED LANDSCAPE ARCHITECT Robert B. Schott 3625 Signature 11-04-08 Renewal Date 08-11-08 Date STATE OF CALIFORNIA

*To accompany plans dated* 6-20-11

## FLEXIBLE SEDIMENT BARRIER SPACING TABLE

| SLOPE OF ROADWAY (PERCENT) | 0 to 0.9 | 1 to 1.9 | 2 to 2.9 | 3 to 4 | 5+ |
|---|---|---|---|---|---|
| INTERVAL BETWEEN BARRIERS | 50′ | 35′ | 30′ | 25′ | 20′ |
| ANGLE FROM FACE OF CURB | 70° | 70° | 70° | 45° | 45° |
| SUGGESTED BARRIER LENGTH | 6′ | 6′ | 6′ | 6′ | 6′ |

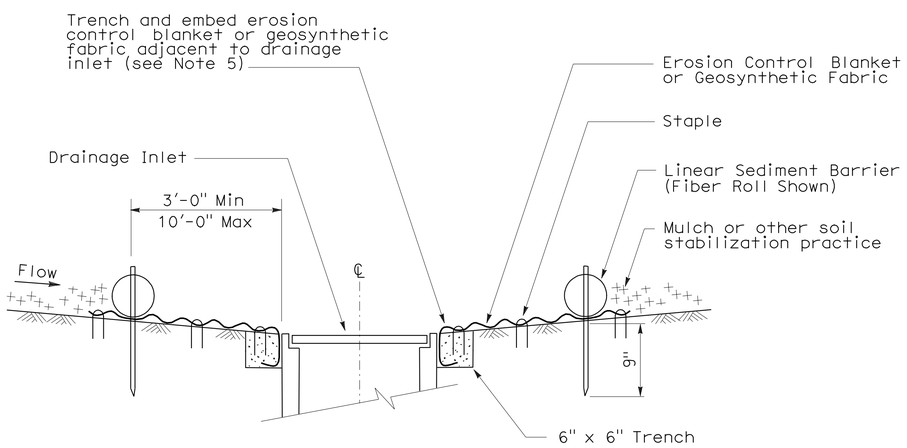


SECTION A-A

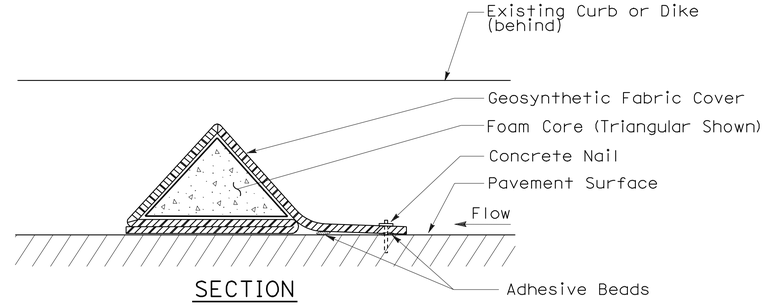


SECTION

## FLEXIBLE SEDIMENT BARRIER DETAIL (FOAM BARRIER SHOWN)

## NOTES:

1. See Standard Plan T51 for Temporary Silt Fence.
2. Dimensions may vary to fit field conditions.
3. Install a minimum of 3 flexible sediment barriers upstream of each drainage inlet to be protected.
4. Position erosion control blanket or geosynthetic fabric at edge of concrete apron and secure in trench.
5. Erosion control blanket or geosynthetic fabric is not required if the area adjacent to the drainage inlet is vegetated.

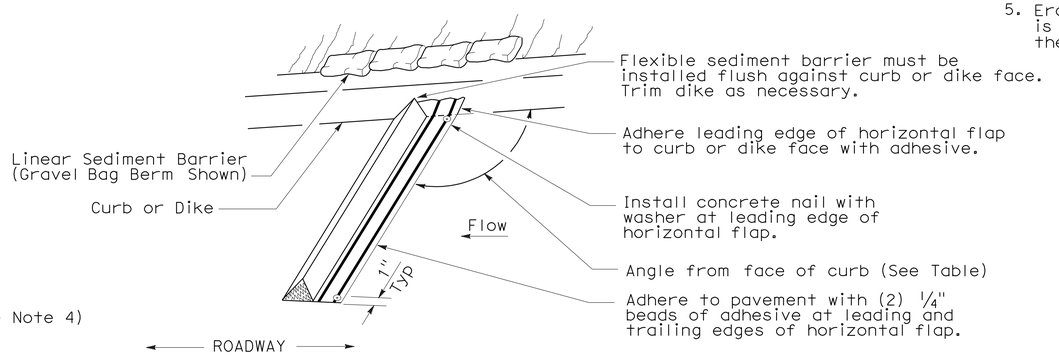


PERSPECTIVE

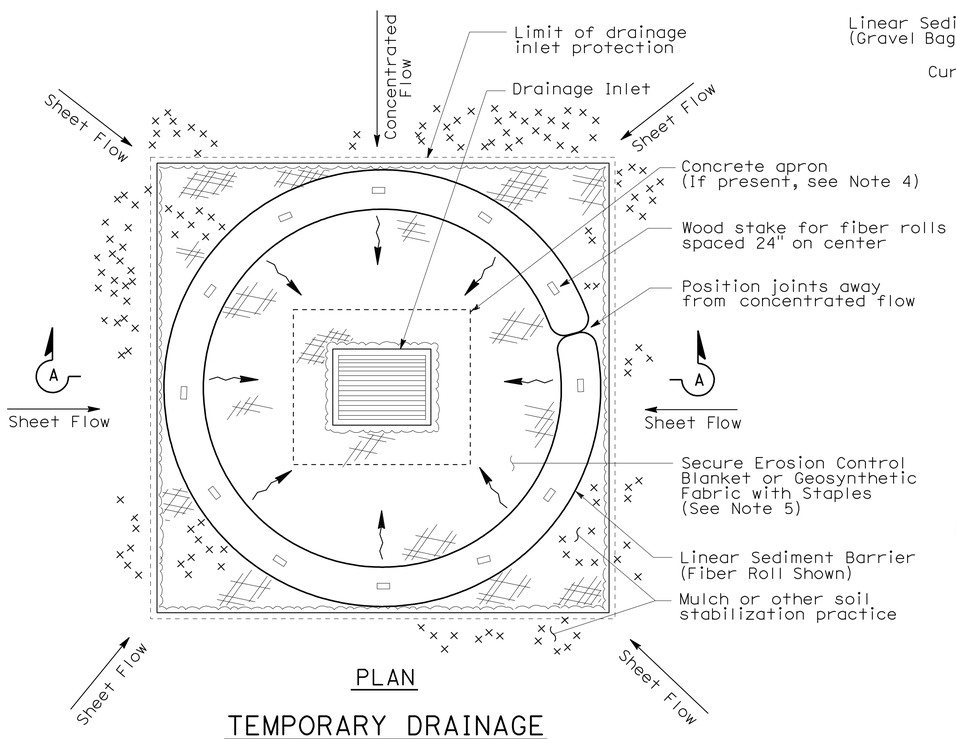


PLAN

## TEMPORARY DRAINAGE INLET PROTECTION (TYPE 4A)

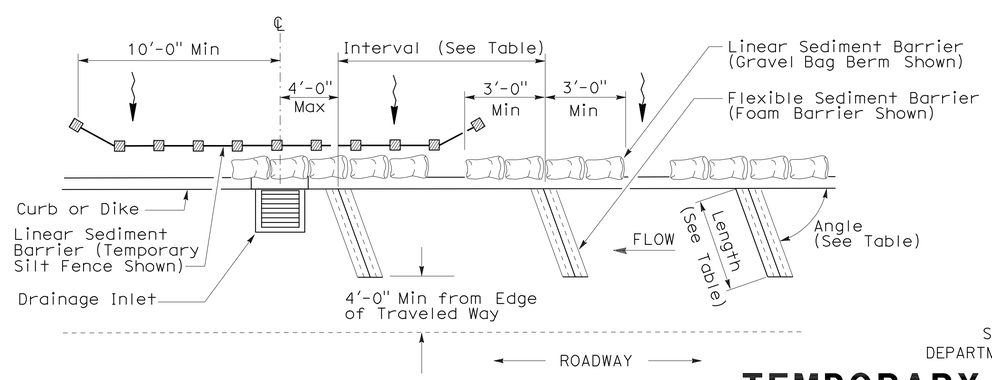


PLAN

## TEMPORARY DRAINAGE INLET PROTECTION (TYPE 4B) FLEXIBLE SEDIMENT BARRIER

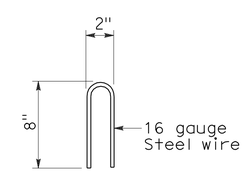


STAPLE DETAIL

STATE OF CALIFORNIA
DEPARTMENT OF TRANSPORTATION

# TEMPORARY WATER POLLUTION CONTROL DETAILS (TEMPORARY DRAINAGE INLET PROTECTION)

NO SCALE

NSP T63 DATED AUGUST 15, 2008 SUPPLEMENTS THE STANDARD PLANS BOOK DATED MAY 2006.

**NEW STANDARD PLAN NSP T63**

**2006 NEW STANDARD PLAN NSP T63**

7-11-08

| DIST | COUNTY | ROUTE | POST MILES TOTAL PROJECT | SHEET NO. | TOTAL SHEETS |
|---|---|---|---|---|---|
| 12 | Ora | 91 | R0.0/R10.1 | 280 | 294 |

REGISTERED CIVIL ENGINEER

October 5, 2007
PLANS APPROVAL DATE

REGISTERED PROFESSIONAL ENGINEER Efthymios Delis No. C51434 Exp. 6-30-08 CIVIL STATE OF CALIFORNIA

*The State of California or its officers or agents shall not be responsible for the accuracy or completeness of electronic copies of this plan sheet.*

*To accompany plans dated* 6-20-11

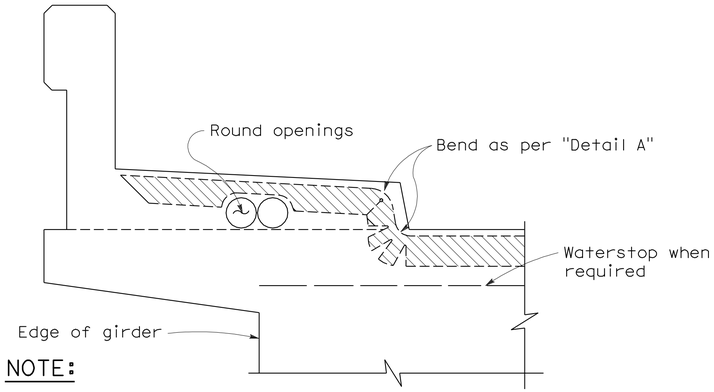


NOTE:

Type "B" seal shown. Type "A" seals to comform to the general path of seal shown, cuts for bending not required. Bend Type "A" seals 3" up into curb or barrier rail on only the low end of the seal.

CONCRETE BARRIER AND SIDEWALK

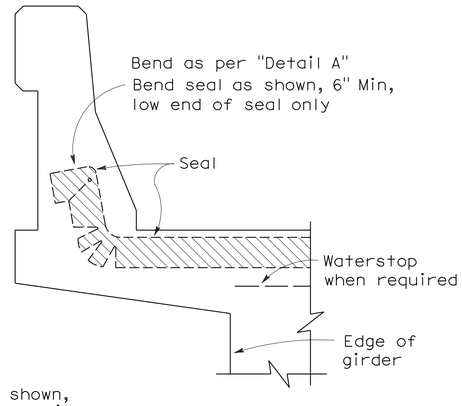


CONCRETE BARRIER

## JOINT SEALS DETAILS

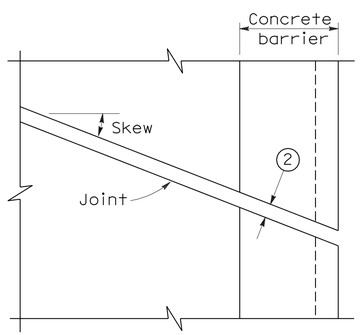


PLAN OF JOINT (SKEW ≤ 20°)

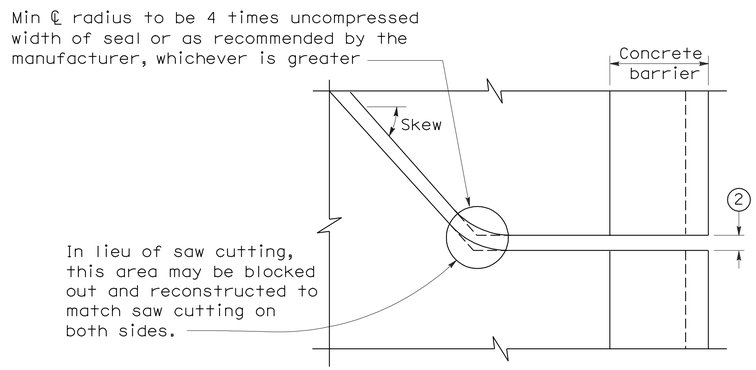


PLAN OF JOINT (SKEW > 20°)

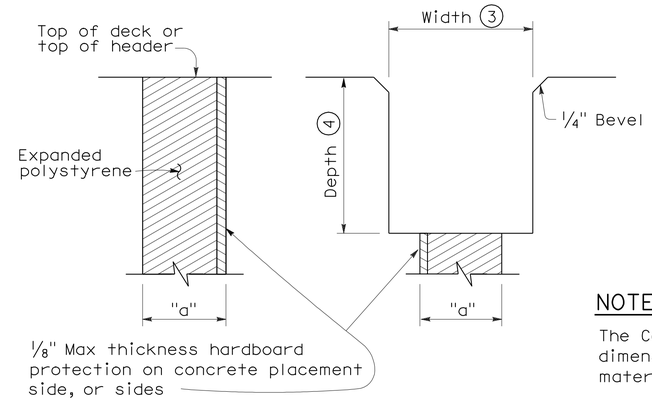


FORMING DETAIL SAWCUT DETAIL

NOTE:

The Contractor shall verify all controlling field dimensions before ordering or fabricatiing any material.

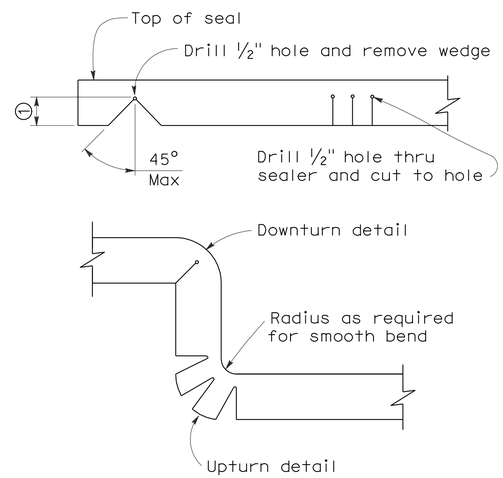


DETAIL A

NOTES:

1. Make smooth cuts from the bottom of seal to 1½" clear of top leaving at least one complete cell between the top of the cut and top of the seal. When necessary cut back of seal to clear conduit and round openings.
2. Opening in barrier to match width of sawn deck joint.
3. Sawcut groove widths shall be as ordered by the Engineer.
4. Depth of sawcut: Type A - Depth to be 2" minimum.
   Type B - Depth to be equal to or greater than the depth of seal measured along the contact surface, when compressed to minimum width position ($W_2$) plus dimensions shown.
5. MR (movement rating) as shown on other plan sheets.
6. Other depths must be approved by the Engineer.

DIMENSIONS "a" OF JOINT REQUIRED

| Movement Rating (MR) 5 | Bridge Type | "a" Dimension Deck Concrete Placed | | |
|---|---|---|---|---|
| | | Winter | Fall-Spring | Summer |
| 2" | All except CIP/PS | 1½" | 1¼" | ¾" |
| | CIP/PS | 1¼" | 1" | ½" |
| 1½" | All except CIP/PS | 1¼" | 1" | ½" |
| | CIP/PS | 1" | ¾" | ½" |
| 1" | All except CIP/PS | 1" | ¾" | ½" |
| | CIP/PS | ¾" | ½" | ½" |
| ½" | All except CIP/PS | ¾" | ¾" | ½" |
| | CIP/PS | ½" | ½" | ½" |

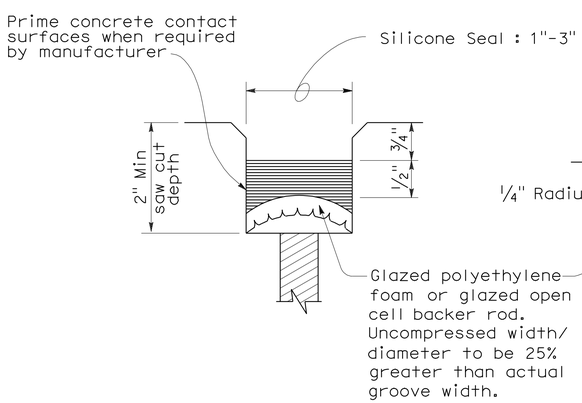


TYPE A SEAL

Movement rating : Silicone = 1" Max

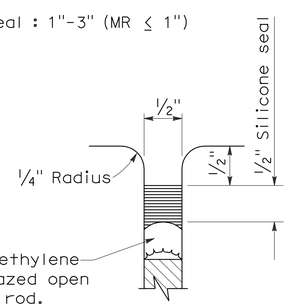


TYPE AL SEAL

Longitudinal joints only

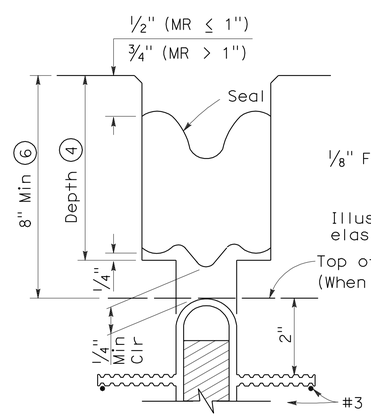


TYPE B JOINT SEAL IN MINIMUM WIDTH POSITION ($W_2$)

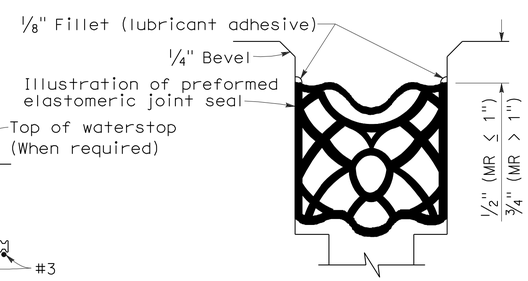


TYPE B SEAL

Movement Rating ≤ 2"

STATE OF CALIFORNIA
DEPARTMENT OF TRANSPORTATION

**JOINT SEALS (MAXIMUM MOVEMENT RATING = 2")**

NO SCALE

RSP B6-21 DATED OCTOBER 5, 2007 SUPERSEDES STANDARD PLAN B6-21 DATED MAY 1, 2006 - PAGE 258 OF THE STANDARD PLANS BOOK DATED MAY 2006.

**REVISED STANDARD PLAN RSP B6-21**

**2006 REVISED STANDARD PLAN RSP B6-21**

5-8-07

| DIST | COUNTY | ROUTE | POST MILES TOTAL PROJECT | SHEET NO. | TOTAL SHEETS |
|---|---|---|---|---|---|
| 12 | Ora | 91 | R0.0/R10.1 | 281 | 294 |

REGISTERED ELECTRICAL ENGINEER

October 5, 2007
PLANS APPROVAL DATE

REGISTERED PROFESSIONAL ENGINEER Jeffery G. McRae No. E14512 Exp. 6-30-08 ELECTRICAL STATE OF CALIFORNIA

*The State of California or its officers or agents shall not be responsible for the accuracy or completeness of electronic copies of this plan sheet.*

*To accompany plans dated* 6-20-11

2006 REVISED STANDARD PLAN RSP ES-1A

## ELECTROLIERS

| STANDARD TYPES |
|---|
| 15, 15D |
| 15 STRUCTURE |
| 21, 21D STRUCTURE |
| 30 |
| 31 |
| 32 |
| 35 |
| 36-20A |

High mast light pole

Double Arm lighting standard

Existing electrolier

Electrolier foundation (Future installation)

### NOTES:

1. Luminaires shall be 310 W HPS when installed on Type 21, 21D, 30, 31, 32, 35 and 36-20A Standards, unless otherwise specified. Luminaires shall be 200 W HPS when installed on other type standards or poles, unless otherwise specified.
2. Luminaires shall be the cutoff type, ANSI Type Ⅲ medium cutoff lighting distribution, unless otherwise specified.
3. Variations noted adjacent to symbol on project plans.

Electrolier (see project notes or project plans)

Luminaire on wood pole

## STANDARD NOTES:

- AB — Abandon. If applied to conduit, remove conductors.
- BC — Install pull box in existing conduit run.
- BP — Pedestrian barricade, type as indicated on plan.
- CB — Install conduit into existing pull box.
- CC — Connect new and existing conduit. Remove existing conductors and install conductors as indicated.
- CF — Conduit to remain for future use. Remove conductors. Install pull wire or rope.
- DH — Detector handhole.
- FA — Foundation to be abandoned.
- IS — Install sign on signal mast arm.
- NS — No slip base on standard.
- PEC — Photoelectric control.
- PEU — Photoelectric unit.
- RC — Equipment or material to be removed and become the property of the Contractor.
- RE — Remove electrolier, fuses and ballast. Tape ends of conductors.
- RL — Relocate equipment.
- RR — Remove and reuse equipment.
- RS — Remove and salvage equipment.
- SC — Splice new to existing conductors.
- SD — Service disconnect.
- SF — Standard to remain for future use. Remove luminaire, pole conductors, fuses and ballast.
- TSP — Telephone service point.

## ABBREVIATIONS AND EQUIPMENT DESIGNATIONS

| PROPOSED | EXISTING | |
|---|---|---|
| BBS | bbs | Battery backup system |
| BC | bc | Bolt circle |
| C | C | Conduit |
| CCTV | cctv | Closed circuit television |
| CKT | ckt | Circuit |
| CMS | cms | Changeable message sign |
| DLC | dlc | Loop detector lead-in cable |
| EMS | ems | Extinguishable message sign |
| EVC | evc | Emergency vehicle cable |
| EVD | evd | Emergency vehicle detector |
| FB | fb | Flashing beacon |
| FBCA | fbca | Flashing beacon control assembly |
| FBS | fbs | Flashing beacon with slip base |
| FO | fo | Fiber optic |
| G | G | Ground (Equipment Grounding Conductor) |
| GFCI | GFCI | Ground fault circuit interrupt |
| HAR | har | Highway advisory radio |
| HEX | hex | Hexagonal |
| HPS | hps | High pressure sodium |
| IISNS | iisns | Internally illuminated street name sign |
| ISL | isl | Induction sign lighting |
| LED | led | Light emitting diode |
| LMA | lma | Luminaire mast arm |
| LPS | lps | Low pressure sodium |
| LTG | ltg | Lighting |
| LUM | lum | Luminaire |
| MAT | mat | Mast arm mounting vehicle signal faces, top attachment |
| MAS | mas | Mast arm mounting vehicle signal faces, side attachment |
| MAS-4A | mas-4A | Mast arm mounting vehicle signal faces, side attachment - 4 signal section |
| MAS-4B | mas-4B | |
| MAS-4C | mas-4C | |
| MAS-5A | mas-5A | Mast arm mounting vehicle signal faces, side attachment - 5 signal section |
| MAS-5B | mas-5B | |
| MC | mc | Mercury contactor |
| M/M | m/m | Multiple to multiple transformer |
| MT | mt | Conduit with pull wire or rope only |
| MTG | mtg | Mounting |
| | mv | Mercury vapor lighting fixture |
| N | N | Neutral (Grounded Conductor) |
| NC | NC | Normally closed |
| NO | NO | Normally open |
| PB | pb | Pull box |
| PEC | pec | Photoelectric control (Type Ⅰ, Ⅱ, Ⅲ, Ⅳ or Ⅴ as shown) |
| PED | ped | Pedestrian |
| PEU | peu | Photoelectric unit |
| PPB | ppb | Pedestrian push button |
| RL | | Relocated equipment |
| RM | rm | Ramp metering |
| SB | sb | Slip base |
| SIC | sic | Signal interconnect cable |
| SIG | sig | Signal |
| SMA | sma | Signal mast arm |
| SNS | sns | Street name sign |
| SP | sp | Service point |
| TDC | tdc | Telephone demarcation cabinet |
| TMS | tms | Traffic monitoring station |
| TOS | tos | Traffic Operations System |
| VEH | veh | Vehicle |
| XFMR | xfmr | Transformer |
| COMM | comm | Communication |
| RWIS | rwis | Roadway weather information system |

## SOFFIT AND WALL MOUNTED LUMINAIRES

Pendant, 70 W HPS unless otherwise specified.

Flush, 70 W HPS unless otherwise specified.

Wall surface, 70 W HPS unless otherwise specified.

Existing soffit or wall luminaire to remain unmodified.

Existing soffit or wall luminaire to be modified as specified.

### NOTE:

Arrow indicates "street side" of luminaire.

STATE OF CALIFORNIA
DEPARTMENT OF TRANSPORTATION

# ELECTRICAL SYSTEMS (SYMBOLS AND ABBREVIATIONS)

NO SCALE

RSP ES-1A DATED OCTOBER 5, 2007 SUPERSEDES STANDARD PLAN ES-1A DATED MAY 1, 2006 - PAGE 400 OF THE STANDARD PLANS BOOK DATED MAY 2006.

**REVISED STANDARD PLAN RSP ES-1A**

| DIST | COUNTY | ROUTE | POST MILES TOTAL PROJECT | SHEET NO. | TOTAL SHEETS |
|---|---|---|---|---|---|
| 12 | Ora | 91 | R0.0/R10.1 | 282 | 294 |

REGISTERED ELECTRICAL ENGINEER

October 5, 2007
PLANS APPROVAL DATE

REGISTERED PROFESSIONAL ENGINEER
Jeffery G. McRae
No. E14512
Exp. 6-30-08
ELECTRICAL
STATE OF CALIFORNIA

*The State of California or its officers or agents shall not be responsible for the accuracy or completeness of electronic copies of this plan sheet.*

*To accompany plans dated* 6-20-11

## CONDUIT

| PROPOSED | EXISTING | |
|---|---|---|
| | | Lighting Conduit, unless otherwise indicated or noted |
| | | Traffic signal conduit |
| C | c | Communication conduit |
| T | t | Telephone conduit |
| F | f | Fire alarm conduit |
| FO | fo | Fiber optic conduit |
| | | Conduit termination (RSP ES-9A C) |
| R | r | Conduit riser in/on structure or service pole |

## SERVICE EQUIPMENT

| PROPOSED | EXISTING | |
|---|---|---|
| OH | oh | Overhead lines |
| U | U | Wood pole "U" indicates utility owned |
| | | Pole guy with anchor |
| | | Utility transformer - ground mounted |
| III | | Service equipment enclosure type |
| | | Service equipment enclosure door indicates front of enclosure |
| T | t | Telephone demarcation cabinet |

## POLE-MOUNTED SERVICE DESIGNATION

Type of installation

TYPE H SERVICE - 28'-10" ← Pole height above grade

## ILLUMINATED OVERHEAD SIGN

| PROPOSED | EXISTING | |
|---|---|---|
| | | Overhead sign - Single post |
| | | Overhead sign - Two post |
| | | Overhead sign - Mounted on structure |
| | | Overhead sign with electrolier |

## SIGNAL EQUIPMENT

| PROPOSED | EXISTING | |
|---|---|---|
| | | Pedestrian signal face |
| | | Pedestrian push button post |
| | | Pedestrian barricade |
| | | Vehicle signal face (with backplate, 3-Section: red, yellow and green) |
| | | Vehicle signal face with angle visors |
| PV | PV | Modifications of basic symbols: "L" indicates all non-arrow sections louvered "LG" indicates louvered green section only "PV" indicates 12" programmed visibility sections "8" indicates all 8" sections (only when specified) |
| | | Type 15TS and Vehicle signal face |
| | | Vehicle signal face with red, yellow and green left arrow sections |
| | | Vehicle signal face with red and yellow sections and up green arrow |
| | | Vehicle signal face (5 Section) with red, yellow and green sections and yellow and green right arrows |
| | | Type 1 Standard and attached vehicle signal faces |
| | | Standard with signal mast arm only and attached vehicle signal faces and internally illuminated street name sign |
| | | Type 33 Standard, Left-turn vehicle signal face and sign |
| | | Standard with luminaire and signal mast arms and attached vehicle signal faces |
| | | Cantilever flashing beacon Type 9 Frame, with a sign unless otherwise specified or indicated |
| | | Type 15-FBS Standard with two vehicle signal face sections with lens, backplate and visor with a sign |
| R | Y | Flashing beacon. One vehicle signal face section with lens, backplate and visor. "R" indicates red indication, "Y" indicates yellow indication |
| | | Controller assembly. Door indicates front of cabinet |

## SIGNAL EQUIPMENT Cont

| PROPOSED | EXISTING | |
|---|---|---|
| | | Guard post |
| | | Type 1 Standard with "Meter On" sign |
| | | Emergency Vehicle detector |

## NOTES:

1. All signal sections shall be 12" unless shown otherwise.
2. Signal heads shall be provided with backplates unless shown otherwise.
3. Signal indication shall be LED.

STATE OF CALIFORNIA
DEPARTMENT OF TRANSPORTATION

# ELECTRICAL SYSTEMS (SYMBOLS AND ABBREVIATIONS)

NO SCALE

RSP ES-1B DATED OCTOBER 5, 2007 SUPERCEDES STANDARD PLAN ES-1B
DATED MAY 1, 2006 - PAGE 401 OF THE STANDARD PLANS BOOK DATED MAY 2006.

**REVISED STANDARD PLAN RSP ES-1B**

**2006 REVISED STANDARD PLAN RSP ES-1B**

| DIST | COUNTY | ROUTE | POST MILES TOTAL PROJECT | SHEET NO. | TOTAL SHEETS |
|---|---|---|---|---|---|
| 12 | Ora | 91 | R0.0/R10.1 | 283 | 294 |

REGISTERED ELECTRICAL ENGINEER

October 5, 2007
PLANS APPROVAL DATE

REGISTERED PROFESSIONAL ENGINEER Jeffery G. McRae No. E14512 Exp. 6-30-08 ELECTRICAL STATE OF CALIFORNIA

*The State of California or its officers or agents shall not be responsible for the accuracy or completeness of electronic copies of this plan sheet.*

*To accompany plans dated* 6-20-11

# EQUIPMENT IDENTIFICATION

## ILLUMINATED SIGN IDENTIFICATION NUMBER:

Sign No. 12345 — Sign number - Place on post or structure

10 ISL SCI 1.0

- 1.0 — Transformer rating (kVA)
- SCI — Lighting control type
- ISL — Number and type of fixtures

Do NOT place on standard or structure

## ELECTROLIER OR EQUIPMENT IDENTIFICATION NUMBER:

12345 - 15'-0"

- 15'-0" — Mast arm length, if shown. Do not place on standard or structure.
- 12345 — Equipment number - Place on standard or structure. Existing equipment numbers are shown in parenthesis

## CONDUIT AND CONDUCTOR IDENTIFICATION:

1½"C, 2#10, 15#14, 2 DLC

- 2#10, 15#14, 2 DLC — Number and size of conductors and cables
- 1½"C — Size of conduit in inches

| | |
|---|---|
| Ø1, Ø2, Ø2P, etc. | Traffic phase identification for signal faces, detectors and phase diagrams |
| 1 2 3 | Project note numbers |
| A B C | Equipment description, installation or item numbers |
| 1 2 3 | Conduit run numbers |

## SIGNAL AND LIGHTING STANDARD (TYPICAL DESIGNATION):

19A - 3 - 100

- 100 — Wind velocity = 100 mph
- 3 — Case 3 arm loading
- 19A — Standard type
- Standard Plan sheet number
- Detail number or letter

## MISCELLANEOUS EQUIPMENT

| PROPOSED | EXISTING | |
|---|---|---|
| CMS | cms | Changeable message sign |
| | | Closed circuit television camera |
| | | Highway advisory radio pole and antenna |
| EMS | ems | Extinguishable message sign |
| M V | m v | Detection device<br>M = Microwave sensor<br>V = Video image sensor |

## WIRING DIAGRAM LEGEND

| | |
|---|---|
| P | Pole |
| CB | Circuit breaker |
| A | Ampere |
| V | Volt |
| M | Metered |
| UM | Unmetered |
| NB | Neutral bus |
| GB | Ground bus |
| G | Equipment grounding conductor |
| N | Grounded conductor (Neutral) |

- External conductor
- Conductor or bus
- Tie point
- Contactor coil
- Contactor, Contact NO
- Terminal blocks
- Contactor, Contact NC
- Enclosure bond
- Grounding electrode
- Circuit breaker
- Receptacle

## PULL BOXES

PROPOSED EXISTING

Pull box-No. 5 unless otherwise indicated or noted.

3 — 9A(21)

Pull box-Additional designations or descriptions

| | |
|---|---|
| 3 | = No. 3½ pull box |
| 5 | = No. 5 pull box |
| 6 | = No. 6 pull box |
| 7 | = No. 7 (Ceiling pull box) |
| 8 | = No. 8 (Pendant soffit pull box) |
| 9 | = No. 9 pull box |
| 9A | = No. 9A pull box |

(C) = Communications pull box
(E) = Pull box with extension
(S) = Sprinkler control pull box
(21) = Anchor bolts and conduit for future installation of Type 21 Standard
(T) = Traffic pull box

## VEHICLE DETECTORS

5 J 9 U

- U = Upper, L = Lower
- Slot number in input file
- Input file (I or J)
- Phase

| PROPOSED | EXISTING | |
|---|---|---|
| | | Type A detector loop. Outline of sawcut shown. |
| | | Type B detector loop. Outline of sawcut shown. |
| | | Type C detector loop. Outline of sawcut shown. |
| | | Type D detector loop. Outline of sawcut shown. |
| | | Type E detector loop. Outline of sawcut shown. |
| | | Type Q detector loop. Outline of sawcut shown. |
| | | Magnetic detector |
| DH | dh | Detector handhole |
| | | Microwave or video detection zone |

STATE OF CALIFORNIA
DEPARTMENT OF TRANSPORTATION

# ELECTRICAL SYSTEMS (SYMBOLS AND ABBREVIATIONS)

NO SCALE

RSP ES-1C DATED OCTOBER 5, 2007 SUPERCEDES STANDARD PLAN ES-1C DATED MAY 1, 2006 - PAGE 402 OF THE STANDARD PLANS BOOK DATED MAY 2006.

**REVISED STANDARD PLAN RSP ES-1C**

**2006 REVISED STANDARD PLAN RSP ES-1C**

| DIST | COUNTY | ROUTE | POST MILES TOTAL PROJECT | SHEET NO. | TOTAL SHEETS |
|---|---|---|---|---|---|
| 12 | Ora | 91 | R0.0/R10.1 | 284 | 294 |

REGISTERED ELECTRICAL ENGINEER

October 5, 2007
PLANS APPROVAL DATE

REGISTERED PROFESSIONAL ENGINEER Jeffery G. McRae No. E14512 Exp. 6-30-08 ELECTRICAL STATE OF CALIFORNIA

*The State of California or its officers or agents shall not be responsible for the accuracy or completeness of electronic copies of this plan sheet.*

*To accompany plans dated* 6-20-11

# 2006 REVISED STANDARD PLAN RSP ES-5A

## LOOP INSTALLATION PROCEDURE

1. Loops shall be centered in lanes.
2. Saw slots in pavement for loop conductors as shown in details.
3. Distance between side of loop and a lead-in saw cut from adjacent detectors shall be 2'-0" minimum. Distance between lead-in saw cuts shall be 6" minimum.
4. Bottom of saw slot shall be smooth with no sharp edges.
5. Slots shall be washed until clean, blown out and thoroughly dried before installing loop conductors.
6. Adjacent loops on the same sensor unit channel shall be wound in opposite directions.
7. Identify and tag loop circuit pairs in the pull box with loop number, start (S) and finish (F) of conductor. Identify and tag lead-in-cable with sensor number and phase.
8. Install loop conductor in slot using a 3/16" to 1/4" thick wood paddle. Hold loop conductors with wood paddles (at the bottom of the sawed slot) during sealant placement.
9. No more than 2 twisted pairs shall be installed in one sawed slot.
10. Allow additional 5'-0" of slack length of conductor for the lead-in run to pull box.
11. The additional length of each conductor for each loop shall be twisted together into a pair (6 turns per 3'-4" minimum) before being placed in the slot and conduit leading to pull box.
12. Test each loop circuit for continuity, circuit resistance and insulation resistance at the pull box before filling slots.
13. Fill slots as shown in details.
14. Splice loop conductors to lead-in-cable. Splices shall be soldered.
15. End of lead-in-cable and Type 2 loop conductor shall be waterproofed prior to installing in conduit to prevent moisture from entering the cable.
16. Lead-in-cable shall not be spliced between the pull box and the controller cabinet terminals.
17. Test each loop circuit for continuity, circuit resistance and insulation resistance at the controller cabinet location.
18. Where loop conductors are not to be spliced to a lead-in-cable, the ends of the conductors shall be taped and waterproofed with electrical insulating coating.

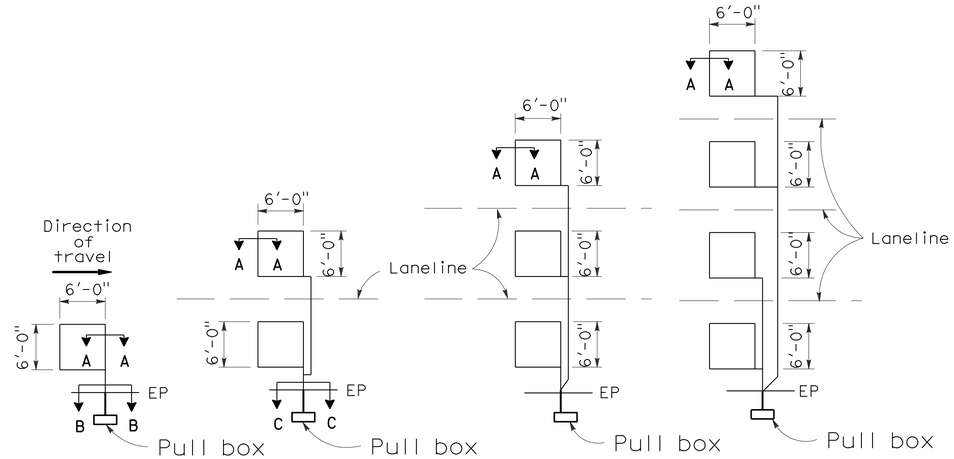


TYPE 1A INSTALLATION | TYPE 2A INSTALLATION | TYPE 3A INSTALLATION | TYPE 4A INSTALLATION

## SAWCUT DETAILS

(Type A loop detector configurations illustrated)

1. 1A thru 4A = 1 Type A loop configuration in each lane.
2. 1B thru 4B = 1 Type B loop configuration in each lane.
3. 1C = 1 Type C loop configuration entering lanes as required.
4. 1D thru 4D = 1 Type D loop configuration in each lane.
5. 1E thru 4E = 1 Type E loop configuration in each lane.
6. 1Q thru 4Q = 1 Type Q loop configuration in each lane. (Use Type A, B, C, D, E or Q loop detector configurations only when specified or shown on plans)

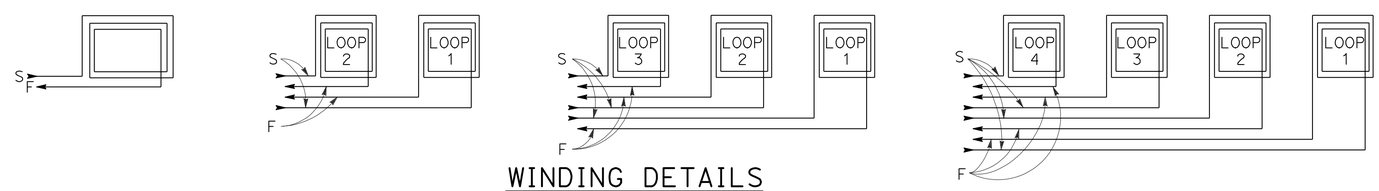


## WINDING DETAILS

See Notes 6 and 7

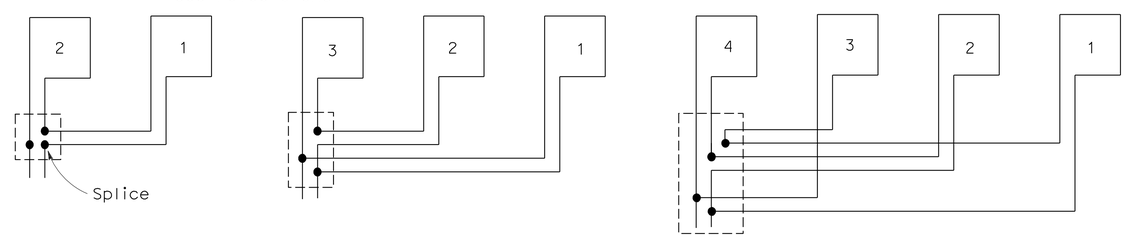


## TYPICAL LOOP CONNECTIONS

(Dashed lines represent the pull box)

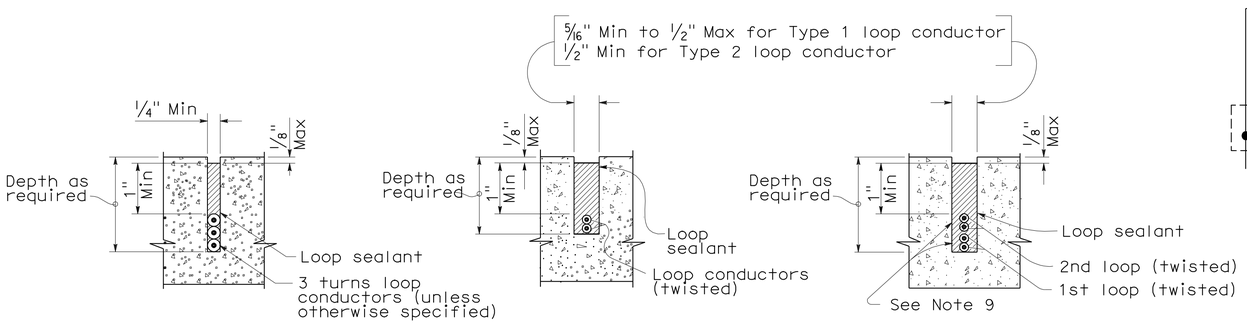


SECTION A-A | SECTION B-B | SECTION C-C

## SLOT DETAILS - TYPE 1 AND TYPE 2 LOOP CONDUCTOR

STATE OF CALIFORNIA
DEPARTMENT OF TRANSPORTATION

# ELECTRICAL SYSTEMS (DETECTORS)

NO SCALE

RSP ES-5A DATED OCTOBER 5, 2007 SUPERCEDES STANDARD PLAN ES-5A DATED MAY 1, 2006 - PAGE 423 OF THE STANDARD PLANS BOOK DATED MAY 2006.

**REVISED STANDARD PLAN RSP ES-5A**

| DIST | COUNTY | ROUTE | POST MILES TOTAL PROJECT | SHEET No. | TOTAL SHEETS |
|---|---|---|---|---|---|
| 12 | Ora | 91 | R0.0/R10.1 | 285 | 294 |

REGISTERED CIVIL ENGINEER 03-21-11 DATE

6-20-11
PLANS APPROVAL DATE

REGISTERED PROFESSIONAL ENGINEER MAMUNUR RAHMAN No. C 48515 Exp. 06-30-12 CIVIL STATE OF CALIFORNIA

*The State of California or its officers or agents shall not be responsible for the accuracy or completeness of electronic copies of this plan sheet.*

## LEGEND

Indicates Existing Structure.

Indicates limits of install new joint seal. Repair joint spalls prior to placement of new joint seal. For details see "JOINT SEAL DETAILS" sheet.

Indicates limits of Clean Expansion Joint prior to installing new Joint Seal.

Indicates limits of Structure Approach Slab Type R(30D). For details, see "STRUCTURE APPROACH TYPE R(30D)" sheet.

Indicates Direction of Traffic.

Indicates HOV Lane

**NOTE:**

1. For details not shown, see RSP B6-21
2. See DIPHRAGM ABUTMENT detail for joint seal on "JOINT SEAL DETAILS" sheet.

## STANDARD PLANS DATED MAY 2006

| | |
|---|---|
| A10A | ACRONYMS AND ABBREVIATIONS (A-L) |
| A10B | ACRONYMS AND ABBREVIATIONS (M-Z) |
| RSP B6-21 | JOINT SEALS (MAXIMUM MOVEMENT RATING = 2") |
| RSP P-10 | CONCRETE PAVEMENT - BAR DETAILS |

STANDARD PLAN SHEET NO.

DETAIL NO.

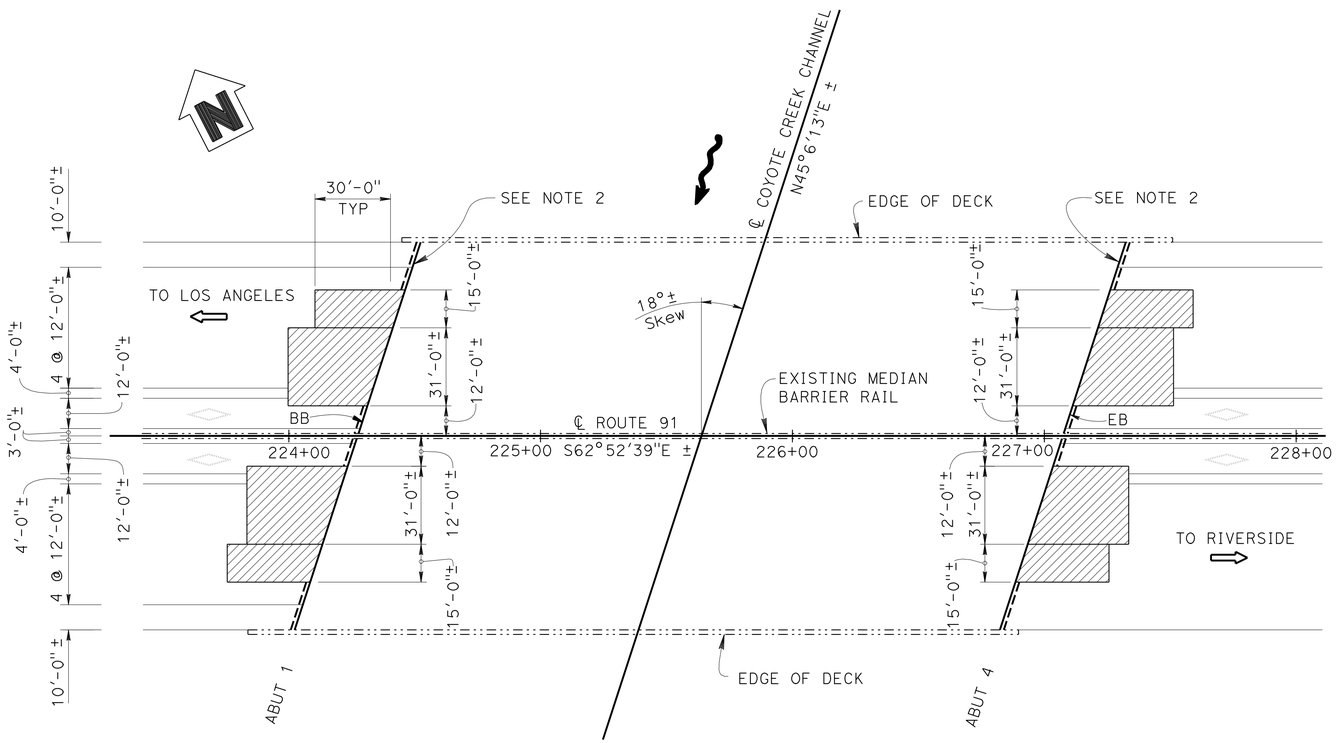


BR. NO. 55-0306, PM= R0.10

## COYOTE CREEK

1" = 30'

## INDEX TO PLANS


| NO. | SHEET NAME |
|---|---|
| 1. | GENERAL PLAN NO. 1 |
| 2. | GENERAL PLAN NO. 2 |
| 3. | GENERAL PLAN NO. 3 |
| 4. | GENERAL PLAN NO. 4 |
| 5. | GENERAL PLAN NO. 5 |
| 6. | GENERAL PLAN NO. 6 |
| 7. | GENERAL PLAN NO. 7 |
| 8. | GENERAL PLAN NO. 8 |
| 9. | JOINT SEAL DETAILS |
| 10. | STRUCTURE APPROACH TYPE R(30D) |


QUANTITIES

| | | |
|---|---|---|
| REMOVE UNSOUND CONCRETE | 2 | CF |
| AGGREGATE BASE (APPROACH SLAB) | 23 | CY |
| STRUCTURAL CONCRETE, APPROACH SLAB (TYPE R) | 233 | CY |
| PAVING NOTCH EXTENSION | 145 | CF |
| CLEAN EXPANSION JOINT | 130 | LF |
| RAPID SETTING CONCRETE (PATCH) | 2 | CF |
| JOINT SEAL (MR 2") | 326 | LF |

**NOTE:**

THE CONTRACTOR SHALL VERIFY ALL CONTROLLING FIELD DIMENSIONS BEFORE ORDERING OR FABRICATING ANY MATERIAL.

PAUL CHUNG
DESIGN ENGINEER

| | BY | CHECKED | | BY | CHECKED |
|---|---|---|---|---|---|
| DESIGN | MAMUNUR RAHMAN | CESAR SANCHEZ | | | |
| DETAILS | HENGAMEH MAHBOOBI / H.I. | MAMUNUR RAHMAN | LAYOUT | HECTOR INIGUEZ | MAMUNUR RAHMAN |
| QUANTITIES | CESAR SANCHEZ | MAMUNUR RAHMAN | SPECIFICATIONS | DAVE KLEIN | PLANS AND SPECS COMPARED DAVE KLEIN |

ORIGINAL SCALE IN INCHES FOR REDUCED PLANS 0 1 2 3

STATE OF CALIFORNIA
DEPARTMENT OF TRANSPORTATION

DIVISION OF ENGINEERING SERVICES
STRUCTURE DESIGN
DESIGN BRANCH 19

BRIDGE NO. VARIOUS
POST MILE VARIOUS

# ROUTE 91 BRIDGES
# GENERAL PLAN NO. 1

UNIT: 3621
PROJECT NUMBER & PHASE: 1200020045 1 CONTRACT NO.: 12-0H0291

DISREGARD PRINTS BEARING EARLIER REVISION DATES

REVISION DATES: 10-26-10 | 03-15-11 | 03-21-11

SHEET 1 OF 10

STRUCTURES DESIGN GENERAL PLAN SHEET (ENGLISH) (REV.09-01-10)

FILE => 01_EA12-0H0291-a-gp.dgn

USERNAME => s124496 DATE PLOTTED => 20-JUN-2011 TIME PLOTTED => 13:48

| DIST | COUNTY | ROUTE | POST MILES TOTAL PROJECT | SHEET No. | TOTAL SHEETS |
|---|---|---|---|---|---|
| 12 | Ora | 91 | R0.0/R10.1 | 286 | 294 |

REGISTERED CIVIL ENGINEER 03-21-11 DATE

6-20-11
PLANS APPROVAL DATE

REGISTERED PROFESSIONAL ENGINEER MAMUNUR RAHMAN No. C 48515 Exp. 06-30-12 CIVIL STATE OF CALIFORNIA

*The State of California or its officers or agents shall not be responsible for the accuracy or completeness of electronic copies of this plan sheet.*

# LEGEND

- Indicates Existing Structure.
- Indicates limits of install new joint seal. Repair joint spalls prior to placement of new joint seal. For details see "JOINT SEAL DETAILS" sheet.
- Indicates limits of Clean Expansion Joint prior to installing new Joint Seal.
- Indicates limits of Structure Approach Slab Type R(30D). For details, see "STRUCTURE APPROACH TYPE R(30D)" sheet.
- Indicates Direction of Traffic.
- Indicates HOV Lane

QUANTITIES

| | | |
|---|---|---|
| REMOVE UNSOUND CONCRETE | 2 | CF |
| AGGREGATE BASE (APPROACH SLAB) | 16 | CY |
| STRUCTURAL CONCRETE, APPROACH SLAB (TYPE R) | 157 | CY |
| PAVING NOTCH EXTENSION | 98 | CF |
| CLEAN EXPANSION JOINT | 234 | LF |
| RAPID SETTING CONCRETE (PATCH) | 2 | CF |
| JOINT SEAL (MR 2") | 365 | LF |

QUANTITIES

| | | |
|---|---|---|
| REMOVE UNSOUND CONCRETE | 2 | CF |
| AGGREGATE BASE (APPROACH SLAB) | 14 | CY |
| STRUCTURAL CONCRETE, APPROACH SLAB (TYPE R) | 136 | CY |
| PAVING NOTCH EXTENSION | 92 | CF |
| CLEAN EXPANSION JOINT | 250 | LF |
| RAPID SETTING CONCRETE (PATCH) | 2 | CF |
| JOINT SEAL (MR 2") | 374 | LF |

**NOTE:**

1. For details not shown, see RSP B6-21
2. See DIPHRAGM ABUTMENT detail for joint seal on "JOINT SEAL DETAILS" sheet.

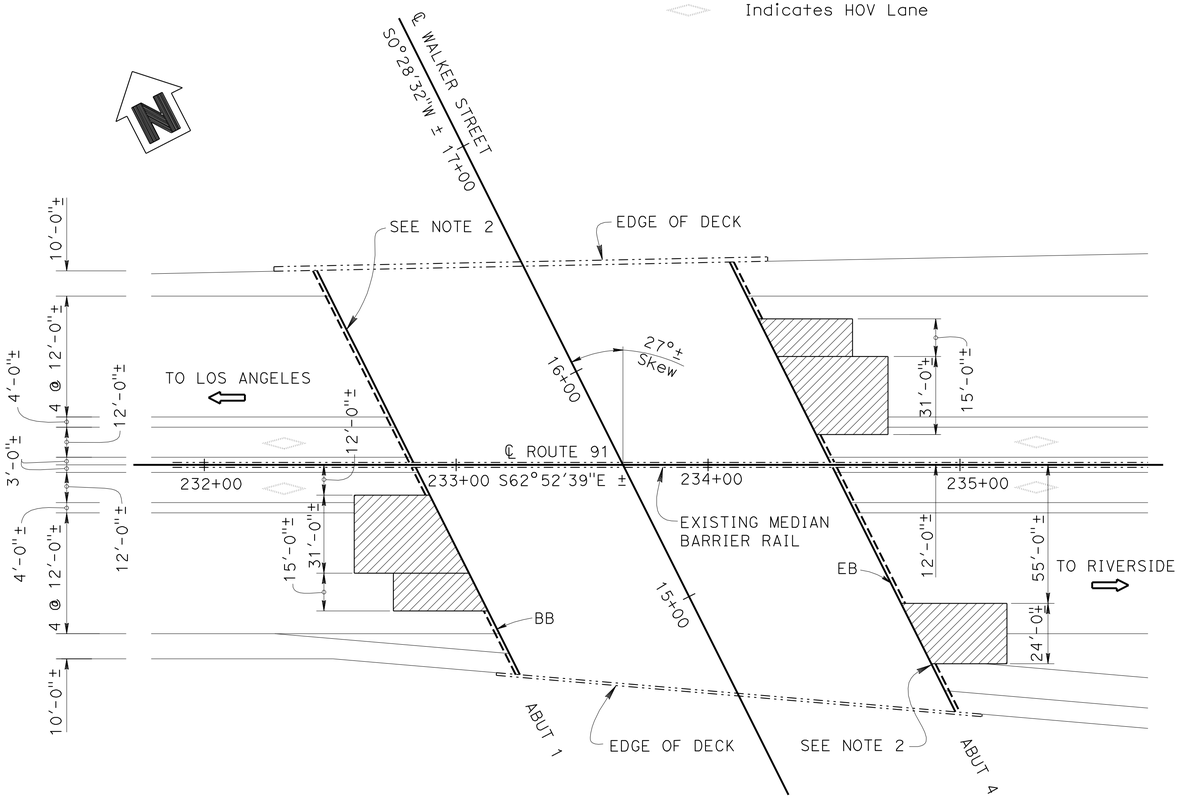


BR. NO. 55-0308, PM= R0.28

## WALKER STREET UC

1" = 30'

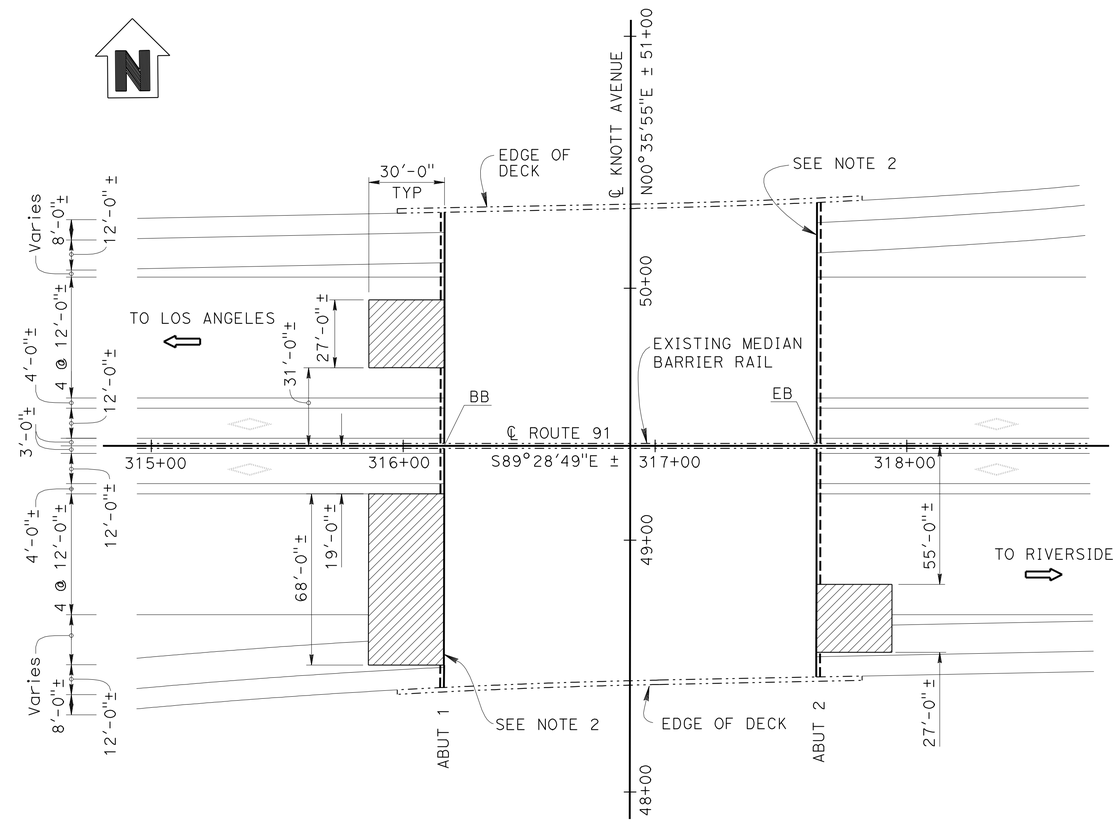


BR. NO. 55-0300, PM = R1.85

## KNOTT AVENUE UC

1" = 30'

NOTE:

THE CONTRACTOR SHALL VERIFY ALL CONTROLLING FIELD DIMENSIONS BEFORE ORDERING OR FABRICATING ANY MATERIAL.

| | | | | | |
|---|---|---|---|---|---|
| PAUL CHUNG<br>DESIGN ENGINEER | DESIGN | BY MAMUNUR RAHMAN | CHECKED CESAR SANCHEZ | | |
| | DETAILS | BY HENGAMEH MAHBOOBI / H.I. | CHECKED MAMUNUR RAHMAN | LAYOUT BY HECTOR INIGUEZ | CHECKED MAMUNUR RAHMAN |
| | QUANTITIES | BY CESAR SANCHEZ | CHECKED MAMUNUR RAHMAN | SPECIFICATIONS BY DAVE KLEIN | PLANS AND SPECS COMPARED DAVE KLEIN |

ORIGINAL SCALE IN INCHES FOR REDUCED PLANS 0 1 2 3

STATE OF CALIFORNIA
DEPARTMENT OF TRANSPORTATION

DIVISION OF ENGINEERING SERVICES
STRUCTURE DESIGN
DESIGN BRANCH 19

UNIT: 3621
PROJECT NUMBER & PHASE: 1200020045 1
CONTRACT NO.: 12-0H0291

BRIDGE NO. VARIOUS
POST MILE VARIOUS

# ROUTE 91 BRIDGES
# GENERAL PLAN NO. 2

DISREGARD PRINTS BEARING EARLIER REVISION DATES

REVISION DATES: ~~10-26-10~~ 03-21-11 ~~03-15-11~~

SHEET 2 OF 10

| DIST | COUNTY | ROUTE | POST MILES TOTAL PROJECT | SHEET No. | TOTAL SHEETS |
|---|---|---|---|---|---|
| 12 | Ora | 91 | R0.0/R10.1 | 287 | 294 |

REGISTERED CIVIL ENGINEER 03-21-11 DATE

6-20-11
PLANS APPROVAL DATE

REGISTERED PROFESSIONAL ENGINEER
MAMUNUR RAHMAN
No. C 48515
Exp. 06-30-12
CIVIL
STATE OF CALIFORNIA

*The State of California or its officers or agents shall not be responsible for the accuracy or completeness of electronic copies of this plan sheet.*

## LEGEND

- Indicates Existing Structure.
- Indicates limits of install new joint seal. Repair joint spalls prior to placement of new joint seal. For details see "JOINT SEAL DETAILS" sheet.
- Indicates limits of Clean Expansion Joint prior to installing new Joint Seal.
- Indicates limits of Structure Approach Slab Type R(30D). For details, see "STRUCTURE APPROACH TYPE R(30D)" sheet.
- Indicates Direction of Traffic.
- Indicates HOV Lane

QUANTITIES

| | | |
|---|---|---|
| REMOVE UNSOUND CONCRETE | 2 | CF |
| AGGREGATE BASE (APPROACH SLAB) | 4 | CY |
| STRUCTURAL CONCRETE, APPROACH SLAB (TYPE R) | 37 | CY |
| PAVING NOTCH EXTENSION | 40 | CF |
| CLEAN EXPANSION JOINT | 634 | LF |
| RAPID SETTING CONCRETE (PATCH) | 2 | CF |
| JOINT SEAL (MR 2") | 690 | LF |

NOTE:

1. For details not shown, see RSP B6-21
2. See DIPHRAGM ABUTMENT detail for joint seal on "JOINT SEAL DETAILS" sheet.

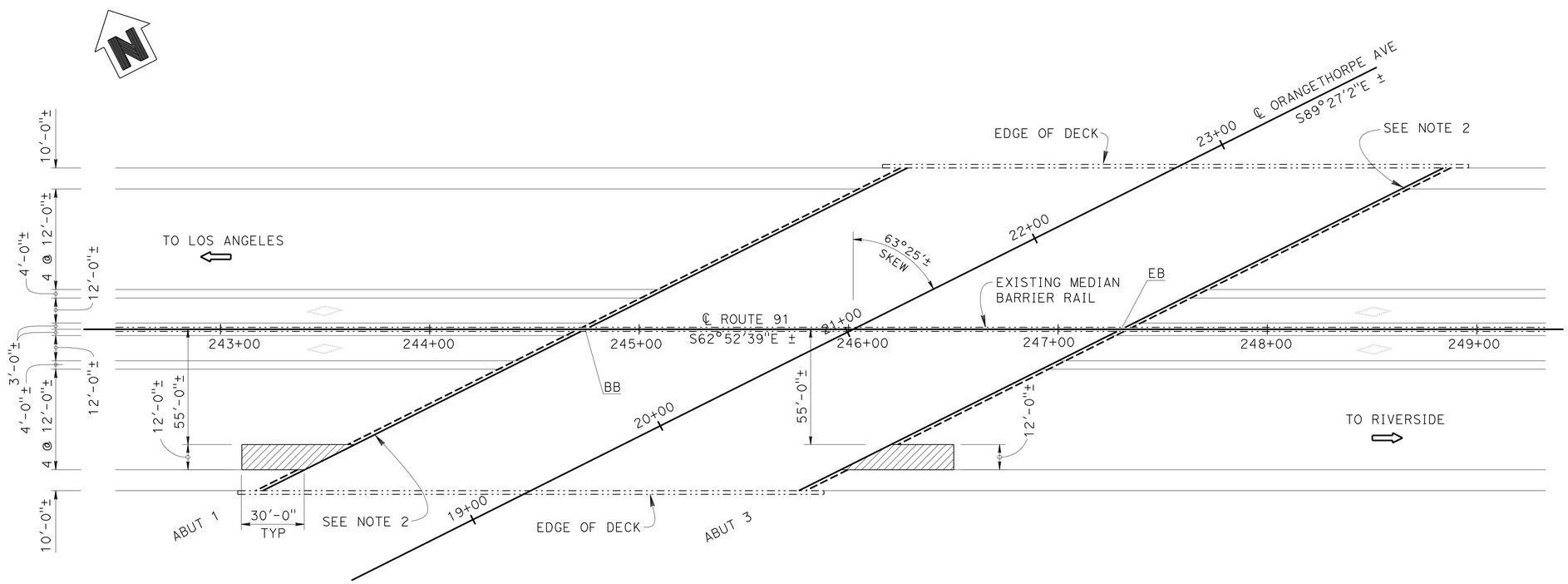


BR. NO. 55-0309, PM= R0.54

## ORANGETHORPE AVENUE UC

1" = 30'

NOTE:

THE CONTRACTOR SHALL VERIFY ALL CONTROLLING FIELD DIMENSIONS BEFORE ORDERING OR FABRICATING ANY MATERIAL.

PAUL CHUNG
DESIGN ENGINEER

| | BY | CHECKED | | BY | CHECKED |
|---|---|---|---|---|---|
| DESIGN | MAMUNUR RAHMAN | CESAR SANCHEZ | | | |
| DETAILS | HENGAMEH MAHBOOBI / H.I. | MAMUNUR RAHMAN | LAYOUT | HECTOR INIGUEZ | MAMUNUR RAHMAN |
| QUANTITIES | CESAR SANCHEZ | MAMUNUR RAHMAN | SPECIFICATIONS | DAVE KLEIN | PLANS AND SPECS COMPARED DAVE KLEIN |

ORIGINAL SCALE IN INCHES FOR REDUCED PLANS 0 1 2 3

STATE OF CALIFORNIA
DEPARTMENT OF TRANSPORTATION

DIVISION OF ENGINEERING SERVICES
STRUCTURE DESIGN
DESIGN BRANCH 19

BRIDGE NO. VARIOUS
POST MILE VARIOUS

# ROUTE 91 BRIDGES
# GENERAL PLAN NO. 3

UNIT: 3621
PROJECT NUMBER & PHASE: 1200020045 1 CONTRACT NO.: 12-0H0291

DISREGARD PRINTS BEARING EARLIER REVISION DATES

REVISION DATES: 10-29-10 03-15-11 03-21-11

SHEET 3 OF 10

STRUCTURES DESIGN GENERAL PLAN SHEET (ENGLISH) (REV.09-01-10)

FILE => 03_EA12-0H0291-a-gp.dgn

USERNAME => s124496 DATE PLOTTED => 20-JUN-2011 TIME PLOTTED => 13:48

| DIST | COUNTY | ROUTE | POST MILES TOTAL PROJECT | SHEET No. | TOTAL SHEETS |
|---|---|---|---|---|---|
| 12 | Ora | 91 | R0.0/R10.1 | 288 | 294 |

REGISTERED CIVIL ENGINEER 03-21-11 DATE

6-20-11
PLANS APPROVAL DATE

REGISTERED PROFESSIONAL ENGINEER MAMUNUR RAHMAN No. C 48515 Exp. 06-30-12 CIVIL STATE OF CALIFORNIA

*The State of California or its officers or agents shall not be responsible for the accuracy or completeness of electronic copies of this plan sheet.*

## LEGEND

- Indicates Existing Structure.
- Indicates limits of install new joint seal. Repair joint spalls prior to placement of new joint seal. For details see "JOINT SEAL DETAILS" sheet.
- Indicates limits of Clean Expansion Joint prior to installing new Joint Seal.
- Indicates limits of Structure Approach Slab Type R(30D). For details, see "STRUCTURE APPROACH TYPE R(30D)" sheet.
- Indicates Direction of Traffic.
- Indicates HOV Lane

QUANTITIES

| | | |
|---|---|---|
| REMOVE UNSOUND CONCRETE | 2 | CF |
| AGGREGATE BASE (APPROACH SLAB) | 8 | CY |
| STRUCTURAL CONCRETE, APPROACH SLAB (TYPE R) | 80 | CY |
| PAVING NOTCH EXTENSION | 54 | CF |
| CLEAN EXPANSION JOINT | 286 | LF |
| RAPID SETTING CONCRETE (PATCH) | 2 | CF |
| JOINT SEAL (MR 2") | 360 | LF |

QUANTITIES

| | | |
|---|---|---|
| REMOVE UNSOUND CONCRETE | 2 | CF |
| AGGREGATE BASE (APPROACH SLAB) | 11 | CY |
| STRUCTURAL CONCRETE, APPROACH SLAB (TYPE R) | 105 | CY |
| PAVING NOTCH EXTENSION | 70 | CF |
| CLEAN EXPANSION JOINT | 265 | LF |
| RAPID SETTING CONCRETE (PATCH) | 2 | CF |
| JOINT SEAL (MR 1") | 360 | LF |

**NOTE:**

1. For details not shown, see RSP B6-21
2. See DIPHRAGM ABUTMENT detail for joint seal on "JOINT SEAL DETAILS" sheet.

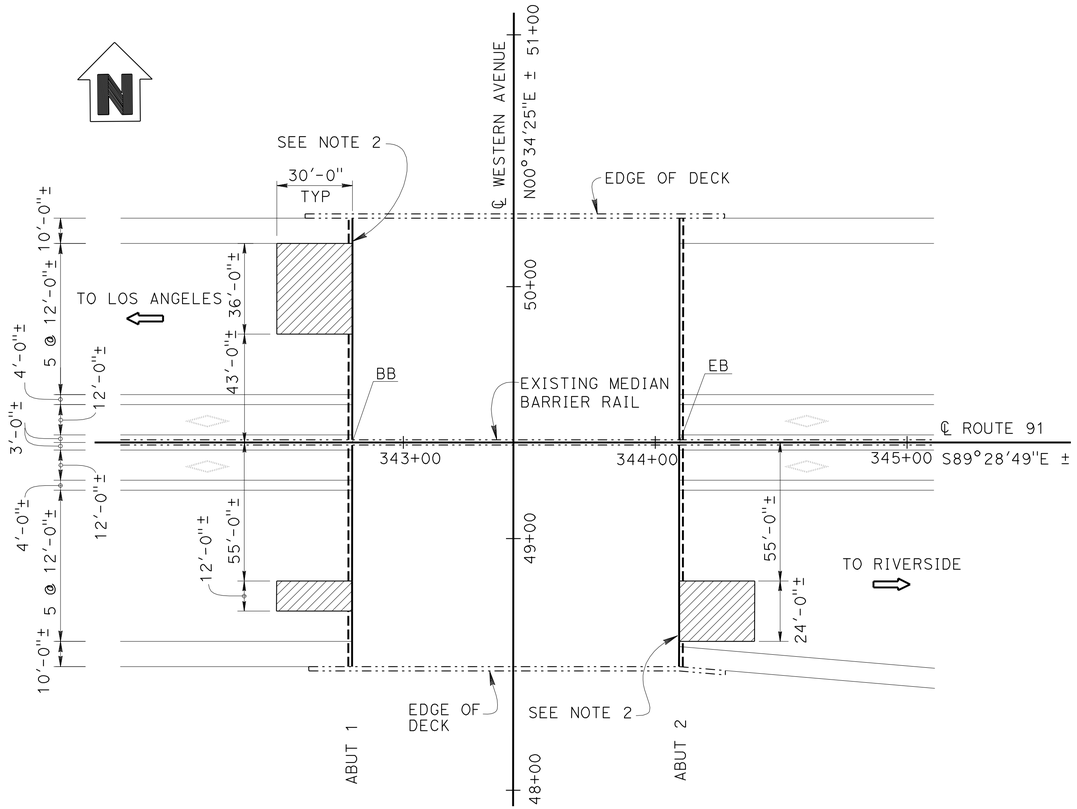


BR. NO. 55-0299, PM= R2.35

## WESTERN AVENUE UC

1" = 30'

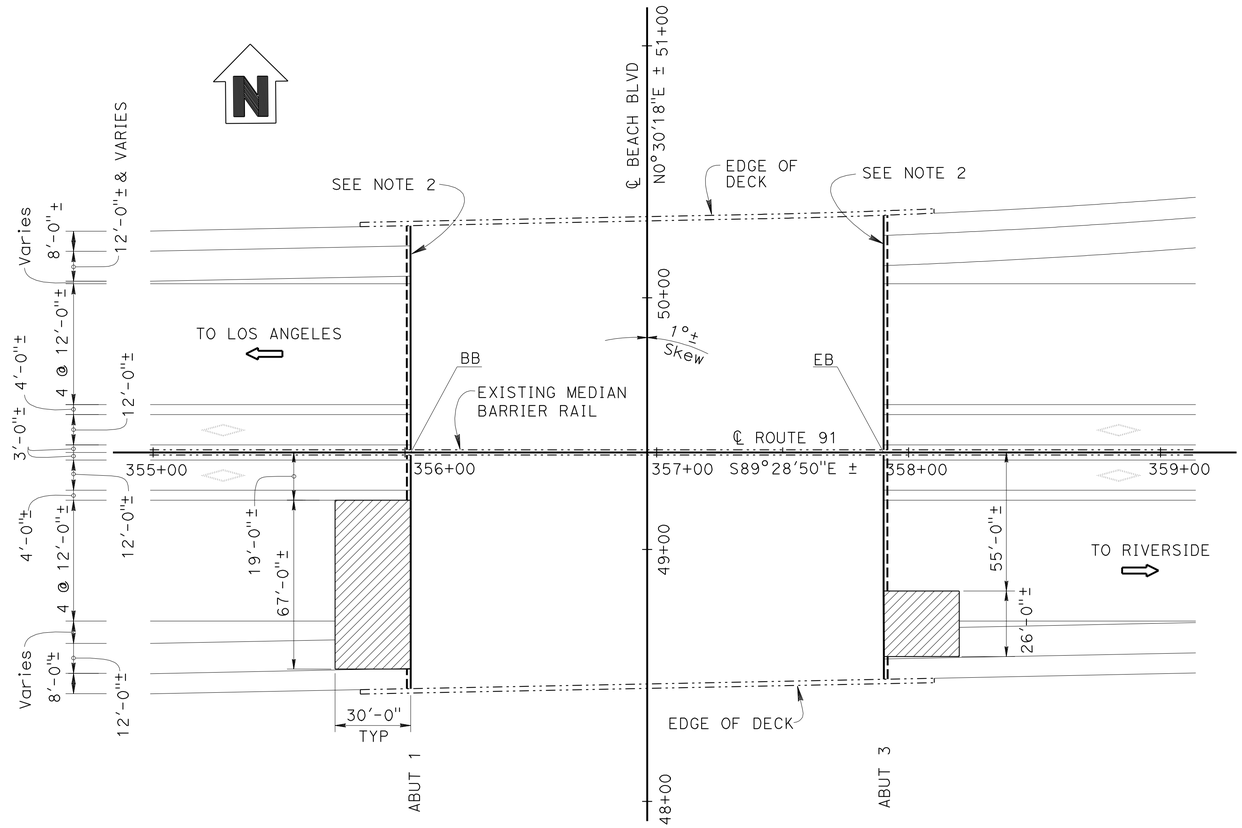


BR. NO. 55-0303, PM= R2.61

## ROUTE 91/39 SEPARATION

1" = 30'

NOTE:

THE CONTRACTOR SHALL VERIFY ALL CONTROLLING FIELD DIMENSIONS BEFORE ORDERING OR FABRICATING ANY MATERIAL.

| | | | | | |
|---|---|---|---|---|---|
| PAUL CHUNG<br>DESIGN ENGINEER | DESIGN | BY MAMUNUR RAHMAN | CHECKED CESAR SANCHEZ | | |
| | DETAILS | BY HENGAMEH MAHBOOBI / H.I. | CHECKED MAMUNUR RAHMAN | LAYOUT BY HECTOR INIGUEZ | CHECKED MAMUNUR RAHMAN |
| | QUANTITIES | BY CESAR SANCHEZ | CHECKED MAMUNUR RAHMAN | SPECIFICATIONS BY DAVE KLEIN | PLANS AND SPECS COMPARED DAVE KLEIN |

ORIGINAL SCALE IN INCHES FOR REDUCED PLANS 0 1 2 3

STATE OF CALIFORNIA
DEPARTMENT OF TRANSPORTATION

DIVISION OF ENGINEERING SERVICES
STRUCTURE DESIGN
DESIGN BRANCH 19

BRIDGE NO. VARIOUS
POST MILE VARIOUS

# ROUTE 91 BRIDGES
# GENERAL PLAN NO. 4

UNIT: 3621
PROJECT NUMBER & PHASE: 1200020045 1 CONTRACT NO.: 12-0H0291

DISREGARD PRINTS BEARING EARLIER REVISION DATES

REVISION DATES: ~~10-18-10~~ ~~03-18-11~~ 03-21-11

SHEET 4 OF 10

USERNAME => s124436 DATE PLOTTED => 20-JUN-2011 TIME PLOTTED => 13:48

STRUCTURES DESIGN GENERAL PLAN SHEET (ENGLISH) (REV.09-01-10)

FILE => 04_EA12-0H0291-a-gp.dgn

| DIST | COUNTY | ROUTE | POST MILES TOTAL PROJECT | SHEET No. | TOTAL SHEETS |
|---|---|---|---|---|---|
| 12 | Ora | 91 | R0.0/R10.1 | 289 | 294 |

REGISTERED CIVIL ENGINEER 03-21-11 DATE

6-20-11
PLANS APPROVAL DATE

REGISTERED PROFESSIONAL ENGINEER MAMUNUR RAHMAN No. C 48515 Exp. 06-30-12 CIVIL STATE OF CALIFORNIA

*The State of California or its officers or agents shall not be responsible for the accuracy or completeness of electronic copies of this plan sheet.*

# LEGEND

- Indicates Existing Structure.
- Indicates limits of install new joint seal. Repair joint spalls prior to placement of new joint seal. For details see "JOINT SEAL DETAILS" sheet.
- Indicates limits of Clean Expansion Joint prior to installing new Joint Seal.
- Indicates limits of Structure Approach Slab Type R(30D). For details, see "STRUCTURE APPROACH TYPE R(30D)" sheet.
- Indicates Direction of Traffic.
- ✳ Approach Slab extends to toe of Median Barrier.
- Indicates HOV Lane

QUANTITIES

| | | |
|---|---|---|
| REMOVE UNSOUND CONCRETE | 2 | CF |
| AGGREGATE BASE (APPROACH SLAB) | 17 | CY |
| STRUCTURAL CONCRETE, APPROACH SLAB (TYPE R) | 174 | CY |
| PAVING NOTCH EXTENSION | 110 | CF |
| CLEAN EXPANSION JOINT | 358 | LF |
| RAPID SETTING CONCRETE (PATCH) | 2 | CF |
| JOINT SEAL (MR 1/2") | 147 | LF |
| JOINT SEAL (MR 1") | 360 | LF |

QUANTITIES

| | | |
|---|---|---|
| REMOVE UNSOUND CONCRETE | 1 | CF |
| AGGREGATE BASE (APPROACH SLAB) | 3 | CY |
| STRUCTURAL CONCRETE, APPROACH SLAB (TYPE R) | 27 | CY |
| PAVING NOTCH EXTENSION | 18 | CF |
| CLEAN EXPANSION JOINT | 154 | LF |
| RAPID SETTING CONCRETE (PATCH) | 1 | CF |
| JOINT SEAL (MR 1") | 179 | LF |

**NOTE:**

1. For details not shown, see RSP B6-21
2. See DIPHRAGM ABUTMENT detail for joint seal on "JOINT SEAL DETAILS" sheet.
3. See ABUTMENT WITH BACKWALL AND PAVING NOTCH detail for joint seal on "JOINT SEAL DETAILS" sheet.

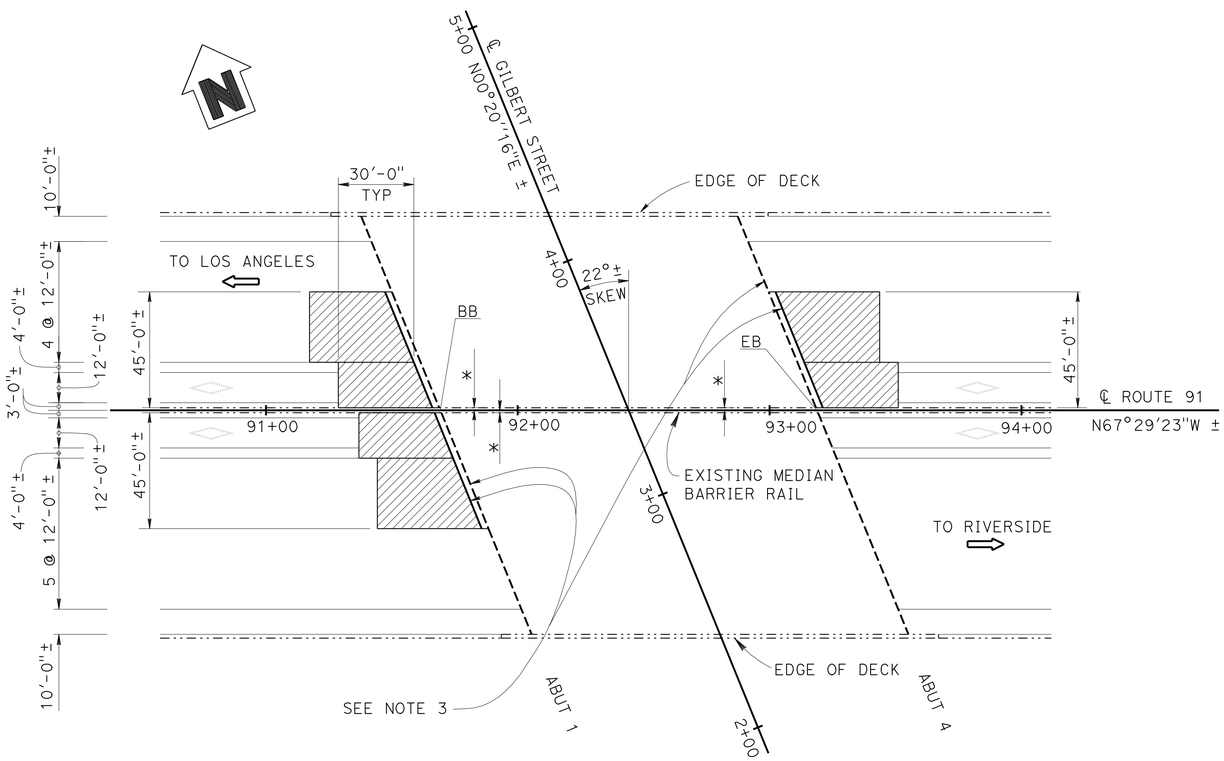


BR. NO. 55-0287, PM= 0.72

## GILBERT STREET UC

1" = 30'

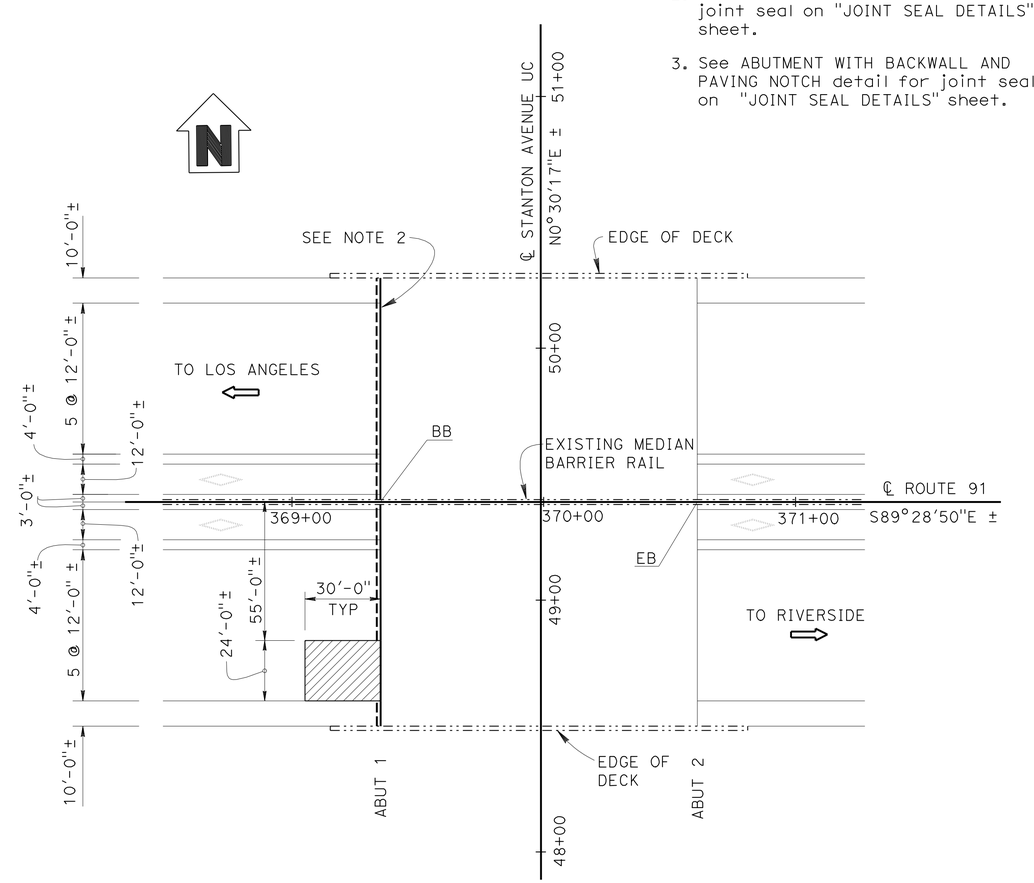


BR. NO. 55-0301, PM= R2.85

## STANTON AVENUE UC

1" = 30'

NOTE:

THE CONTRACTOR SHALL VERIFY ALL CONTROLLING FIELD DIMENSIONS BEFORE ORDERING OR FABRICATING ANY MATERIAL.

| | | | | | |
|---|---|---|---|---|---|
| PAUL CHUNG<br>DESIGN ENGINEER | DESIGN | BY MAMUNUR RAHMAN | CHECKED CESAR SANCHEZ | | |
| | DETAILS | BY HENGAMEH MAHBOOBI / H.I. | CHECKED MAMUNUR RAHMAN | LAYOUT BY HECTOR INIGUEZ | CHECKED MAMUNUR RAHMAN |
| | QUANTITIES | BY CESAR SANCHEZ | CHECKED MAMUNUR RAHMAN | SPECIFICATIONS BY DAVE KLEIN | PLANS AND SPECS COMPARED DAVE KLEIN |

ORIGINAL SCALE IN INCHES FOR REDUCED PLANS 0 1 2 3

STATE OF CALIFORNIA
DEPARTMENT OF TRANSPORTATION

DIVISION OF ENGINEERING SERVICES
STRUCTURE DESIGN
DESIGN BRANCH 19

BRIDGE NO. VARIOUS
POST MILE VARIOUS

# ROUTE 91 BRIDGES
# GENERAL PLAN NO. 5

UNIT: 3621
PROJECT NUMBER & PHASE: 1200020045 1 CONTRACT NO.: 12-0H0291

DISREGARD PRINTS BEARING EARLIER REVISION DATES

REVISION DATES: 10-26-10 03-15-11 03-21-11

SHEET 5 OF 10

STRUCTURES DESIGN GENERAL PLAN SHEET (ENGLISH) (REV.09-01-10)

FILE => 05_EA12-0H0291-a-gp.dgn

USERNAME => s124496 DATE PLOTTED => 20-JUN-2011 TIME PLOTTED => 13:48

| DIST | COUNTY | ROUTE | POST MILES TOTAL PROJECT | SHEET No. | TOTAL SHEETS |
|---|---|---|---|---|---|
| 12 | Ora | 91 | R0.0/R10.1 | 290 | 294 |

REGISTERED CIVIL ENGINEER 03-21-11 DATE

6-20-11
PLANS APPROVAL DATE

REGISTERED PROFESSIONAL ENGINEER MAMUNUR RAHMAN No. C 48515 Exp. 06-30-12 CIVIL STATE OF CALIFORNIA

*The State of California or its officers or agents shall not be responsible for the accuracy or completeness of electronic copies of this plan sheet.*

## LEGEND

- Indicates Existing Structure.
- Indicates limits of install new joint seal. Repair joint spalls prior to placement of new joint seal. For details see "JOINT SEAL DETAILS" sheet.
- Indicates limits of Clean Expansion Joint prior to installing new Joint Seal.
- Indicates limits of Structure Approach Slab Type R(30D). For details, see "STRUCTURE APPROACH TYPE R(30D)" sheet.
- Indicates Direction of Traffic.

QUANTITIES

| | | |
|---|---|---|
| REMOVE UNSOUND CONCRETE | 1 | CF |
| AGGREGATE BASE (APPROACH SLAB) | 3 | CY |
| STRUCTURAL CONCRETE, APPROACH SLAB (TYPE R) | 28 | CY |
| PAVING NOTCH EXTENSION | 26 | CF |
| CLEAN EXPANSION JOINT | 70 | LF |
| RAPID SETTING CONCRETE (PATCH) | 1 | CF |
| JOINT SEAL (MR 1") | 104 | LF |

**NOTE:**

1. For details not shown, see RSP B6-21
2. See DIPHRAGM ABUTMENT detail for joint seal on "JOINT SEAL DETAILS" sheet.

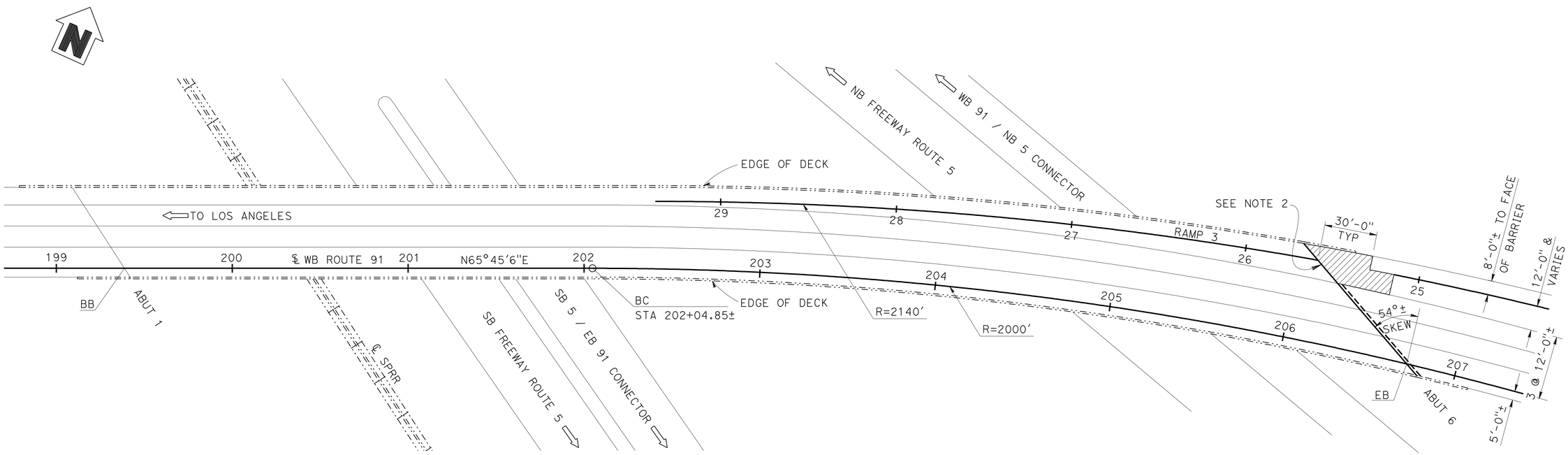


BR. NO. 55-0293L, PM= R3.56

# W91/5 SEPARATION & OH

1" = 30'

NOTE:

THE CONTRACTOR SHALL VERIFY ALL CONTROLLING FIELD DIMENSIONS BEFORE ORDERING OR FABRICATING ANY MATERIAL.

PAUL CHUNG
DESIGN ENGINEER

| | BY | CHECKED |
|---|---|---|
| DESIGN | MAMUNUR RAHMAN | CESAR SANCHEZ |
| DETAILS | HENGAMEH MAHBOOBI / H.I. | MAMUNUR RAHMAN |
| QUANTITIES | CESAR SANCHEZ | MAMUNUR RAHMAN |
| LAYOUT | HECTOR INIGUEZ | MAMUNUR RAHMAN |
| SPECIFICATIONS | DAVE KLEIN | PLANS AND SPECS COMPARED DAVE KLEIN |

ORIGINAL SCALE IN INCHES FOR REDUCED PLANS 0 1 2 3

STATE OF CALIFORNIA
DEPARTMENT OF TRANSPORTATION

DIVISION OF ENGINEERING SERVICES
STRUCTURE DESIGN
DESIGN BRANCH 19

BRIDGE NO. VARIOUS
POST MILE VARIOUS

ROUTE 91 BRIDGES
GENERAL PLAN NO. 6

UNIT: 3621
PROJECT NUMBER & PHASE: 1200020045 1 CONTRACT NO.: 12-0H0291

DISREGARD PRINTS BEARING EARLIER REVISION DATES

REVISION DATES 10-25-10 03-21-11 02-28-11

SHEET 6 OF 10

STRUCTURES DESIGN GENERAL PLAN SHEET (ENGLISH) (REV.09-01-10)

FILE => 06_EA12-0H0291-a-gp.dgn

USERNAME => s124496 DATE PLOTTED => 20-JUN-2011 TIME PLOTTED => 13:48

| DIST | COUNTY | ROUTE | POST MILES TOTAL PROJECT | SHEET No. | TOTAL SHEETS |
|---|---|---|---|---|---|
| 12 | Ora | 91 | R0.0/R10.1 | 291 | 294 |

REGISTERED CIVIL ENGINEER 03-21-11 DATE

6-20-11
PLANS APPROVAL DATE

REGISTERED PROFESSIONAL ENGINEER MAMUNUR RAHMAN No. C 48515 Exp. 06-30-12 CIVIL STATE OF CALIFORNIA

*The State of California or its officers or agents shall not be responsible for the accuracy or completeness of electronic copies of this plan sheet.*

# LEGEND

Indicates Existing Structure.

Indicates limits of install new joint seal. Repair joint spalls prior to placement of new joint seal. For details see "JOINT SEAL DETAILS" sheet.

Indicates limits of Clean Expansion Joint prior to installing new Joint Seal.

Indicates limits of Structure Approach Slab Type R(30D). For details, see "STRUCTURE APPROACH TYPE R(30D)" sheet.

Indicates Direction of Traffic.

* Approach Slab extends to toe of Median Barrier.

Indicates HOV Lane

## QUANTITIES

| | | |
|---|---|---|
| REMOVE UNSOUND CONCRETE | 2 | CF |
| AGGREGATE BASE (APPROACH SLAB) | 11 | CY |
| STRUCTURAL CONCRETE, APPROACH SLAB (TYPE R) | 110 | CY |
| PAVING NOTCH EXTENSION | 74 | CF |
| CLEAN EXPANSION JOINT | 284 | LF |
| RAPID SETTING CONCRETE (PATCH) | 2 | CF |
| JOINT SEAL (MR1/2") | 98 | LF |
| JOINT SEAL (MR 1") | 286 | LF |

## QUANTITIES

| | | |
|---|---|---|
| REMOVE UNSOUND CONCRETE | 1 | CF |
| AGGREGATE BASE (APPROACH SLAB) | 6 | CY |
| STRUCTURAL CONCRETE, APPROACH SLAB (TYPE R) | 60 | CY |
| PAVING NOTCH EXTENSION | 41 | CF |
| CLEAN EXPANSION JOINT | 142 | LF |
| RAPID SETTING CONCRETE (PATCH) | 1 | CF |
| JOINT SEAL (MR1/2") | 54 | LF |
| JOINT SEAL (MR 1") | 143 | LF |

**NOTE:**

1. For details not shown, see RSP B6-21
2. See ABUTMENT WITH BACKWALL AND PAVING NOTCH detail for joint seal on "JOINT SEAL DETAILS" sheet.

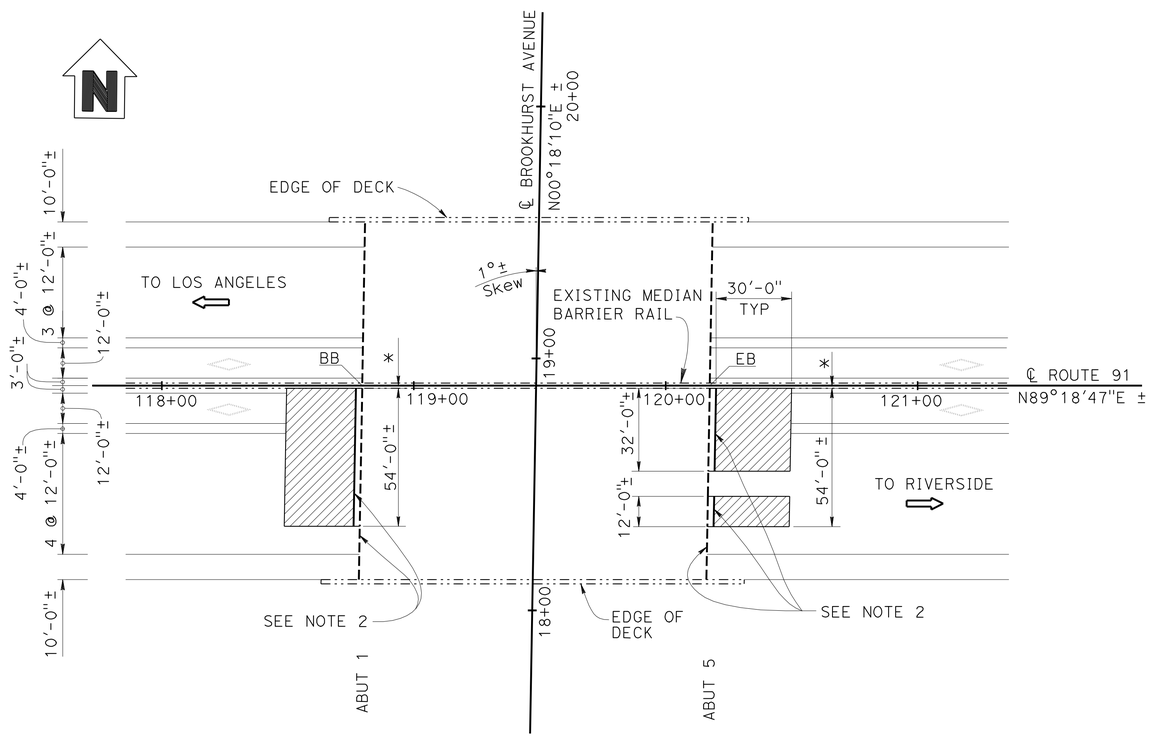


BR. NO. 55-0280, PM= 1.23

## BROOKHURST STREET UC

1" = 30'

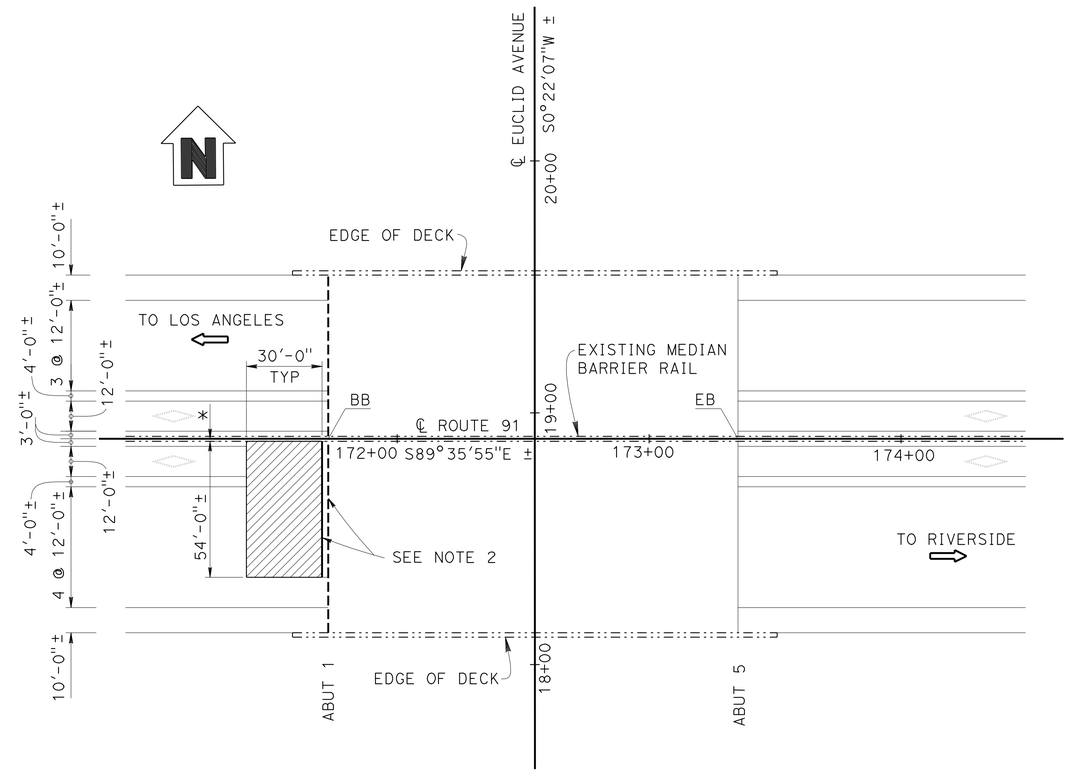


BR. NO. 55-0279, PM= 2.23

## EUCLID STREET UC

1" = 30'

**NOTE:**

THE CONTRACTOR SHALL VERIFY ALL CONTROLLING FIELD DIMENSIONS BEFORE ORDERING OR FABRICATING ANY MATERIAL.

| | | | | | |
|---|---|---|---|---|---|
| PAUL CHUNG<br>DESIGN ENGINEER | DESIGN | BY MAMUNUR RAHMAN | CHECKED CESAR SANCHEZ | | |
| | DETAILS | BY HENGAMEH MAHBOOBI / H.I. | CHECKED MAMUNUR RAHMAN | LAYOUT — BY HECTOR INIGUEZ | CHECKED MAMUNUR RAHMAN |
| | QUANTITIES | BY CESAR SANCHEZ | CHECKED MAMUNUR RAHMAN | SPECIFICATIONS — BY DAVE KLEIN | PLANS AND SPECS COMPARED DAVE KLEIN |

ORIGINAL SCALE IN INCHES FOR REDUCED PLANS 0 1 2 3

STATE OF CALIFORNIA
DEPARTMENT OF TRANSPORTATION

DIVISION OF ENGINEERING SERVICES
STRUCTURE DESIGN
DESIGN BRANCH 19

BRIDGE NO. VARIOUS
POST MILE VARIOUS

# ROUTE 91 BRIDGES
# GENERAL PLAN NO. 7

UNIT: 3621
PROJECT NUMBER & PHASE: 1200020045 1
CONTRACT NO.: 12-0H0291

DISREGARD PRINTS BEARING EARLIER REVISION DATES

REVISION DATES: 10-25-10 | 03-16-11 | 03-21-11

SHEET 7 OF 10

USERNAME => s124196 DATE PLOTTED => 20-JUN-2011 TIME PLOTTED => 13:49

| DIST | COUNTY | ROUTE | POST MILES TOTAL PROJECT | SHEET No. | TOTAL SHEETS |
|---|---|---|---|---|---|
| 12 | Ora | 91 | R0.0/R10.1 | 292 | 294 |

REGISTERED CIVIL ENGINEER 03-21-11 DATE

6-20-11
PLANS APPROVAL DATE

REGISTERED PROFESSIONAL ENGINEER MAMUNUR RAHMAN No. C 48515 Exp. 06-30-12 CIVIL STATE OF CALIFORNIA

*The State of California or its officers or agents shall not be responsible for the accuracy or completeness of electronic copies of this plan sheet.*

# LEGEND

- Indicates Existing Structure.
- Indicates limits of install new joint seal. Repair joint spalls prior to placement of new joint seal. For details see "JOINT SEAL DETAILS" sheet.
- Indicates limits of Clean Expansion Joint prior to installing new Joint Seal.
- Indicates limits of Structure Approach Slab Type R(30D). For details, see "STRUCTURE APPROACH TYPE R(30D)" sheet.
- Indicates Direction of Traffic.
- ✳ Approach Slab extends to toe of Median Barrier.
- Indicates HOV Lane

QUANTITIES

| | | |
|---|---|---|
| REMOVE UNSOUND CONCRETE | 1 | CF |
| AGGREGATE BASE (APPROACH SLAB) | 5 | CY |
| STRUCTURAL CONCRETE, APPROACH SLAB (TYPE R) | 50 | CY |
| PAVING NOTCH EXTENSION | 34 | CF |
| CLEAN EXPANSION JOINT | 166 | LF |
| RAPID SETTING CONCRETE (PATCH) | 1 | CF |
| JOINT SEAL (MR1/2") | 45 | LF |
| JOINT SEAL (MR 1") | 167 | LF |

QUANTITIES

| | | |
|---|---|---|
| REMOVE UNSOUND CONCRETE | 2 | CF |
| AGGREGATE BASE (APPROACH SLAB) | 10 | CY |
| STRUCTURAL CONCRETE, APPROACH SLAB (TYPE R) | 100 | CY |
| PAVING NOTCH EXTENSION | 68 | CF |
| CLEAN EXPANSION JOINT | 284 | LF |
| RAPID SETTING CONCRETE (PATCH) | 2 | CF |
| JOINT SEAL (MR1/2") | 90 | LF |
| JOINT SEAL (MR 1") | 286 | LF |

NOTE:

1. For details not shown, see RSP B6-21
2. See ABUTMENT WITH BACKWALL AND PAVING NOTCH detail for joint seal on "JOINT SEAL DETAILS" sheet.

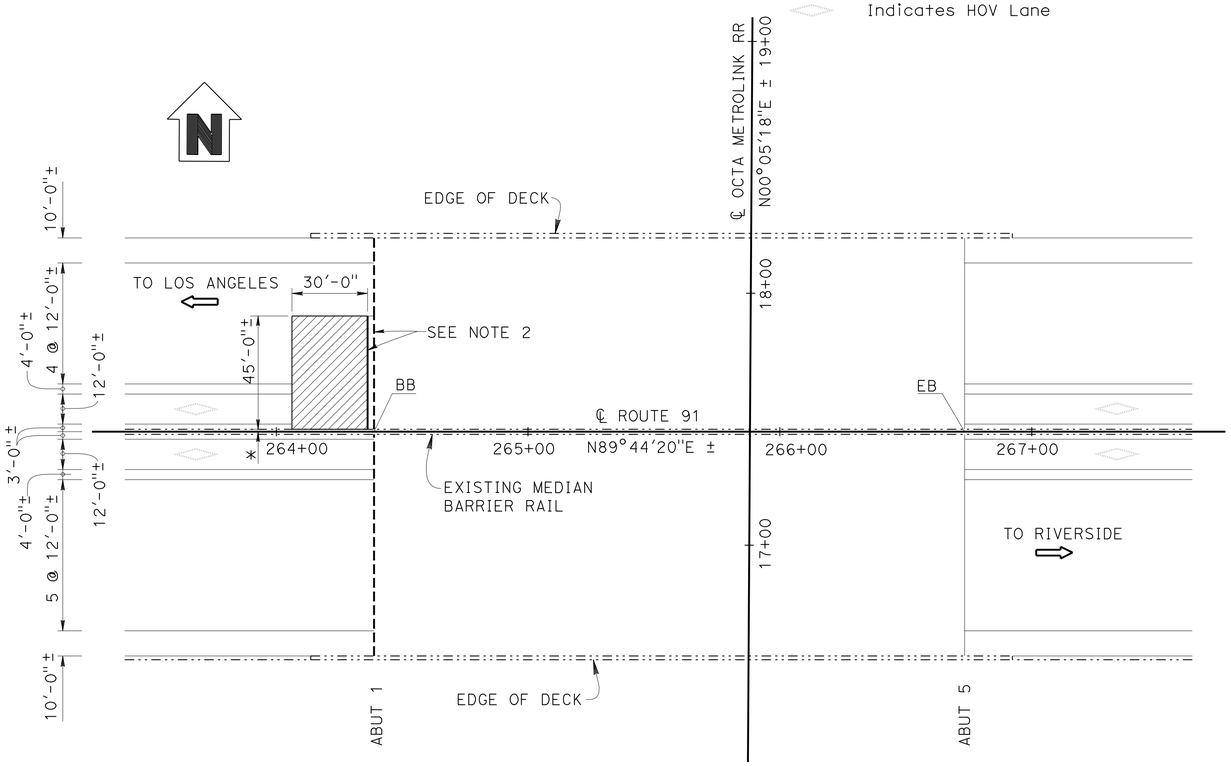


BR. NO. 55-0216, PM= 4.05

## NORTH ANAHEIM OH

1" = 30'

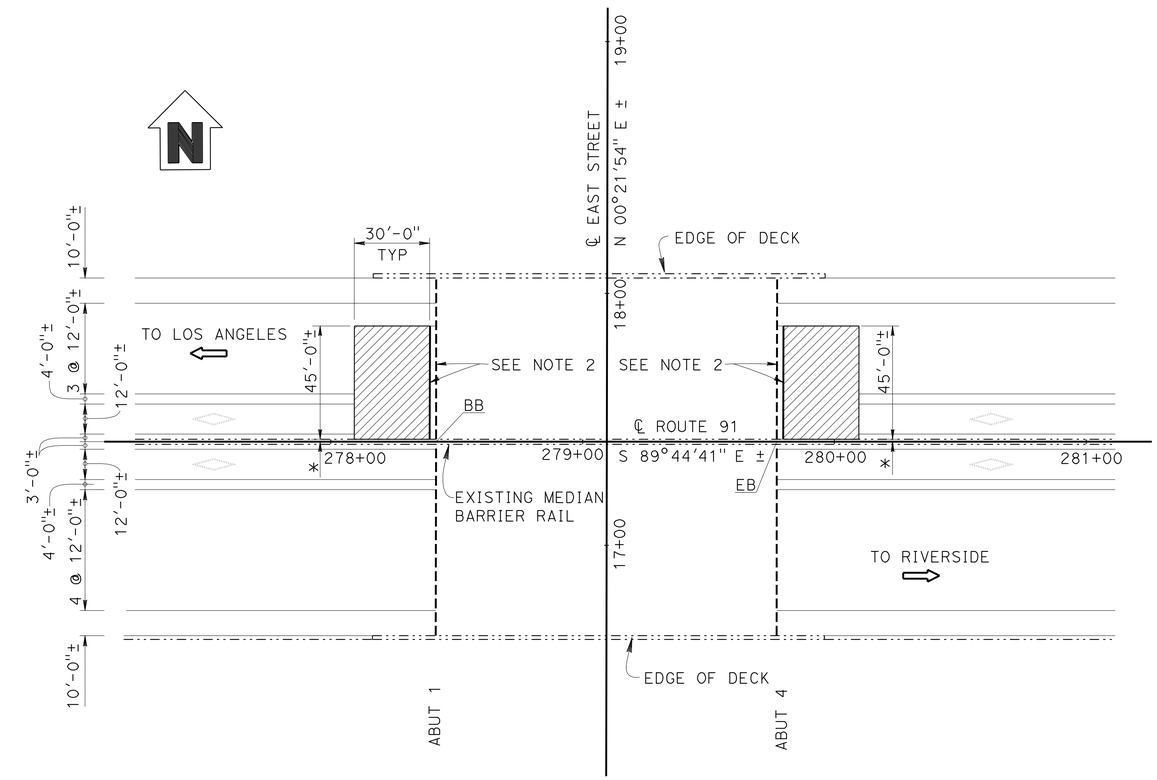


BR. NO. 55-0245, PM= 4.26

## EAST STREET UC

1" = 30'

NOTE:

THE CONTRACTOR SHALL VERIFY ALL CONTROLLING FIELD DIMENSIONS BEFORE ORDERING OR FABRICATING ANY MATERIAL.

PAUL CHUNG
DESIGN ENGINEER

| | BY | CHECKED | | BY | CHECKED |
|---|---|---|---|---|---|
| DESIGN | MAMUNUR RAHMAN | CESAR SANCHEZ | | | |
| DETAILS | HENGAMEH MAHBOOBI / H.I. | MAMUNUR RAHMAN | LAYOUT | HECTOR INIGUEZ | MAMUNUR RAHMAN |
| QUANTITIES | CESAR SANCHEZ | MAMUNUR RAHMAN | SPECIFICATIONS | DAVE KLEIN | PLANS AND SPECS COMPARED DAVE KLEIN |

ORIGINAL SCALE IN INCHES FOR REDUCED PLANS 0 1 2 3

STATE OF CALIFORNIA
DEPARTMENT OF TRANSPORTATION

DIVISION OF ENGINEERING SERVICES
STRUCTURE DESIGN
DESIGN BRANCH 19

BRIDGE NO. VARIOUS
POST MILE VARIOUS

# ROUTE 91 BRIDGES
# GENERAL PLAN NO. 8

UNIT: 3621
PROJECT NUMBER & PHASE: 1200020045 1
CONTRACT NO.: 12-0H0291

DISREGARD PRINTS BEARING EARLIER REVISION DATES

REVISION DATES: 12-13-10 | 03-16-11 | 03-21-11

SHEET 8 OF 10

STRUCTURES DESIGN GENERAL PLAN SHEET (ENGLISH) (REV.09-01-10)

FILE => 08_EA12-0H0291-a-gp.dgn

USERNAME => s124496 DATE PLOTTED => 20-JUN-2011 TIME PLOTTED => 13:49

| DIST | COUNTY | ROUTE | POST MILES TOTAL PROJECT | SHEET No. | TOTAL SHEETS |
|---|---|---|---|---|---|
| 12 | Ora | 91 | R0.0/R10.1 | 293 | 294 |

REGISTERED CIVIL ENGINEER 03-21-11 DATE

6-20-11
PLANS APPROVAL DATE

REGISTERED PROFESSIONAL ENGINEER MAMUNUR RAHMAN No. C 48515 Exp. 06-30-12 CIVIL STATE OF CALIFORNIA

*The State of California or its officers or agents shall not be responsible for the accuracy or completeness of electronic copies of this plan sheet.*

NOTES:

The following note apply to JOINT SEAL TYPE A:

1. Install joint seal (MR = 1/2") or Silicone joint seal 3" up into curb or barrier rail on the low side of the deck where deck joint aligns with curb or barrier rail joint.

The following notes apply to JOINT SEAL TYPE B:

1. Seal must satisfy both minimum Movement Rating (MR) and minimum W1 requirements.
2. Minimum W1 is the calculated maximum width of the joint based on field measurements. After the joints have been cleaned, minimum W1 is to be recalculated by the Engineer.
3. W1 shall be the smaller of the values determined as follows:
   A) 0.85 times the manufacturer's designed minimum uncompressed width of the seal.
   B) The width of the seal on the third successive test cycle of the pressure deflection test when compressed to an average presure of 3.0 Psi.
4. Bend Type B joint seal 6 inches up into curb or rail on the low side of the deck where deck joint matches curb or rail joint.

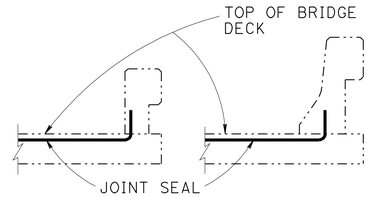


## JOINT SEAL AT LOW SIDE OF DECK

DETAILS SHOWN FOR ILLUSTRATION PURPOSE ONLY. FOR USE ONLY WHERE DECK JOINT MATCHES THE SIDEWALK, CURB OR BARRIER RAIL JOINT.

NO SCALE

## LEGEND

PN Indicates Paving Notch
BW Indicates Backwall
N/A Not Applicable

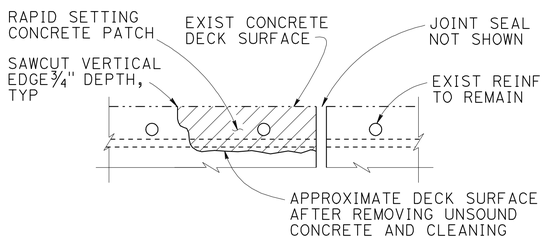


## JOINT SPALL REPAIR DETAIL

REINFORCEMENT MAY BE ENCOUNTERED DURING DECK CONCRETE REMOVAL AND IS TO REMAIN UNDAMAGED. LOCATIONS TO BE DETERMINED BY THE ENGINEER.

NO SCALE

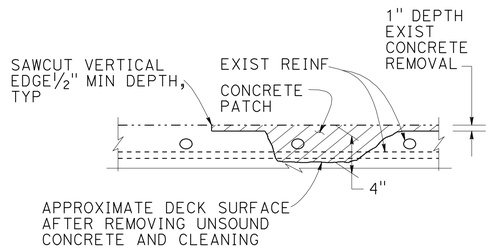


## DECK REPAIR DETAIL

REINFORCEMENT MAY BE ENCOUNTERED DURING DECK CONCRETE REMOVAL AND IS TO REMAIN UNDAMAGED. LOCATIONS TO BE DETERMINED BY THE ENGINEER.

NO SCALE

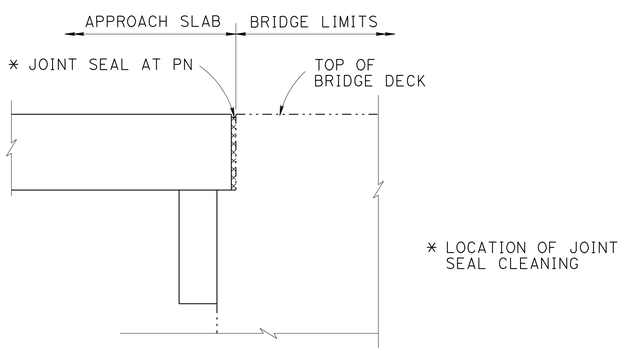


## DIAPHRAGM ABUTMENT

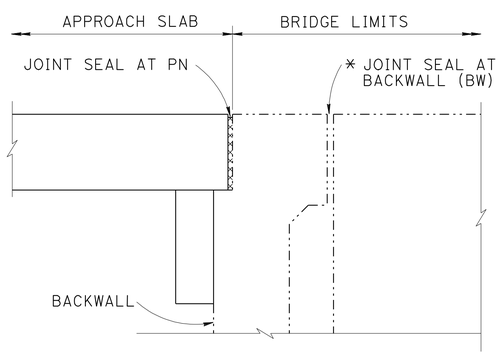


## ABUTMENT WITH BACKWALL AND PAVING NOTCH

NO SCALE

## JOINT SEAL DETAIL

NO SCALE

## JOINT SEAL TABLE

| BRIDGE NO. & NAME | LOCATION | | CLEAN JOINT LENGTH (Feet) | MINIMUM "MR" (Inch) | APPROX LENGTH (Feet) | EXISTING WATERSTOP (Y/N) | APPROX DEPTH OF EXP JOINT CLEANING (Inch) | APPROX DEPTH OF JOINT SPALLS (Inch) | APPROX WIDTH OF JOINT SPALLS (Inch) | APPROX LENGTH OF JOINT SPALLS (FEET) |
|---|---|---|---|---|---|---|---|---|---|---|
| BR NO. 55-0306 COYOTE CREEK | ABUT 1 | PN | 65 | 2 | 163 | N | 12" | 3 | 6 | 5 |
| | ABUT 4 | PN | 65 | 2 | 163 | N | 12" | 3 | 6 | 5 |
| BR NO. 55-0308 WALKER ST UC | ABUT 1 | PN | 126 | 2 | 178 | N | 12" | 3 | 6 | 5 |
| | ABUT 4 | PN | 108 | 2 | 187 | N | 12" | 3 | 6 | 5 |
| BR NO. 55-0300 KNOTT AVE UC | ABUT 1 | PN | 94 | 2 | 190 | N | 12" | 3 | 6 | 5 |
| | ABUT 2 | PN | 156 | 2 | 184 | N | 12" | 3 | 6 | 5 |
| BR NO. 55-0309 ORANGETHROPE AVE UC | ABUT 1 | PN | 317 | 2 | 345 | N | 12" | 3 | 6 | 5 |
| | ABUT 3 | PN | 317 | 2 | 345 | N | 12" | 3 | 6 | 5 |
| BR NO. 55-0299 WESTERN AVE UC | ABUT 1 | PN | 130 | 2 | 179 | N | 12" | 3 | 6 | 5 |
| | ABUT 2 | PN | 156 | 2 | 181 | N | 12" | 3 | 6 | 5 |
| BR NO. 55-0303 ROUTE 91/39 SEPERATION | ABUT 1 | PN | 112 | 1 | 180 | N | 12" | 3 | 6 | 5 |
| | ABUT 3 | PN | 153 | 1 | 180 | N | 12" | 3 | 6 | 5 |
| BR NO. 55-0287 GILBERT ST UC | ABUT 1 | BW | 179 | 1 | 180 | N | N/A | 3 | 6 | 5 |
| | ABUT 1 | PN | | 1/2 | 98 | N | 15" | | | |
| | ABUT 4 | BW | 179 | 1 | 180 | N | N/A | 3 | 6 | 5 |
| | ABUT 4 | PN | | 1/2 | 49 | N | 15" | | | |
| BR NO. 55-0301 STANTON AVE UC | ABUT 1 | PN | 154 | 1 | 179 | N | 12" | 3 | 6 | 5 |
| BR NO. 55-0293L ROUTE 91/5 SEPERATION & OH | ABUT 6 | PN | 70 | 1 | 104 | N | 12" | 3 | 6 | 5 |
| BR NO. 55-0280 BROOKHURST ST UC | ABUT 1 | BW | 142 | 1 | 143 | N | N/A | 3 | 6 | 5 |
| | ABUT 1 | PN | | 1/2 | 54 | N | 15" | | | |
| | ABUT 5 | BW | 142 | 1 | 143 | N | N/A | 3 | 6 | 5 |
| | ABUT 5 | PN | | 1/2 | 44 | N | 15" | | | |
| BR NO. 55-0279 EUCLID ST UC | ABUT 1 | BW | 142 | 1 | 143 | N | N/A | 3 | 6 | 5 |
| | ABUT 1 | PN | | 1/2 | 54 | N | 15" | | | |
| BR NO. 55-0216 NORTH ANAHEIM OH | ABUT 1 | BW | 166 | 1 | 167 | N | N/A | 3 | 6 | 5 |
| | ABUT 1 | PN | | 1/2 | 45 | N | 15" | | | |
| BR NO. 55-0245 EAST ST UC | ABUT 1 | BW | 142 | 1 | 143 | N | N/A | 3 | 6 | 5 |
| | ABUT 1 | PN | | 1/2 | 45 | N | 15" | | | |
| | ABUT 5 | BW | 142 | 1 | 143 | N | N/A | 3 | 6 | 5 |
| | ABUT 5 | PN | | 1/2 | 45 | N | 15" | | | |

NOTE:
THE CONTRACTOR SHALL VERIFY ALL CONTROLLING FIELD DIMENSIONS BEFORE ORDERING OR FABRICATING ANY MATERIAL.

| | BY | CHECKED |
|---|---|---|
| DESIGN | MAMUNUR RAHMAN | CESAR SANCHEZ |
| DETAILS | HENGAMEH MAHBOOBI /H.I. | MAMUNUR RAHMAN |
| QUANTITIES | CESAR SANCHEZ | MAMUNUR RAHMAN |

STATE OF CALIFORNIA
DEPARTMENT OF TRANSPORTATION

DIVISION OF ENGINEERING SERVICES
STRUCTURE DESIGN
DESIGN BRANCH 19

BRIDGE NO. VARIOUS
POST MILE VARIOUS

# ROUTE 91 BRIDGES
# JOINT SEAL DETAILS

STRUCTURES DESIGN DETAIL SHEET (ENGLISH) (REV. 09-01-10)

ORIGINAL SCALE IN INCHES FOR REDUCED PLANS 0 1 2 3

UNIT: 3621
PROJECT NUMBER & PHASE: 1200020045 1 CONTRACT NO.: 12-0H0291

DISREGARD PRINTS BEARING EARLIER REVISION DATES

REVISION DATES: 12-02-10 03-21-11 05-19-11

SHEET 9 OF 10

FILE => 09_EA12-0H0291-m-det.dgn

USERNAME => s124496 DATE PLOTTED => 20-JUN-2011 TIME PLOTTED => 13:49

| DIST | COUNTY | ROUTE | POST MILES TOTAL PROJECT | SHEET No. | TOTAL SHEETS |
|---|---|---|---|---|---|
| 12 | Ora | 91 | R0.0/R10.1 | 294 | 294 |

REGISTERED CIVIL ENGINEER 03-21-11 DATE

6-20-11
PLANS APPROVAL DATE

REGISTERED PROFESSIONAL ENGINEER MAMUNUR RAHMAN No. C 48515 Exp. 06/30/12 CIVIL STATE OF CALIFORNIA

*The State of California or its officers or agents shall not be responsible for the accuracy or completeness of electronic copies of this plan sheet.*

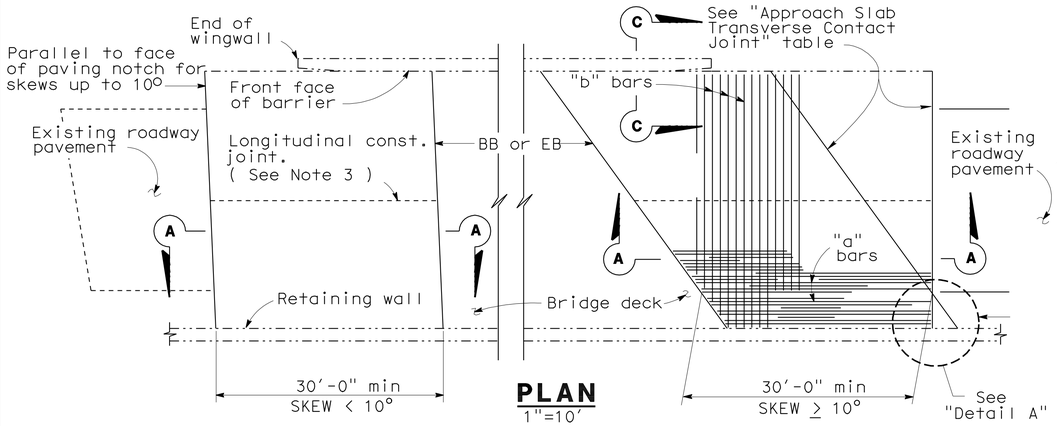


## PLAN
1"=10'

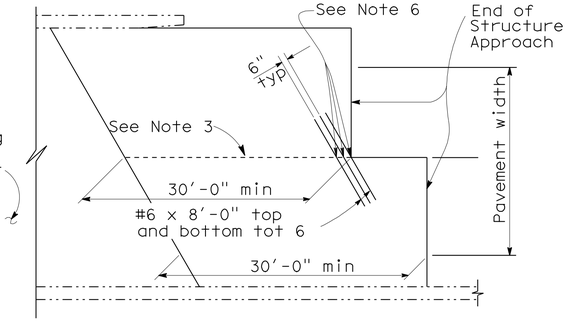


## STRUCTURE APPROACH - END STAGGER DETAIL

| APPROACH SLAB TRANSVERSE CONTACT JOINT | | |
|---|---|---|
| APPROACH SKEW | WITH AC ROADWAY PAVEMENT | WITH PCC ROADWAY PAVEMENT |
| < 10° | Parallel to face of paving notch | Parallel to face of paving notch |
| 10° - 45° | Parallel to face of P N use (Detail A) | Stagger lines 24' to 36' apart |
| > 45° | Parallel to face of P N use (Detail A) | Stagger at each lane line |

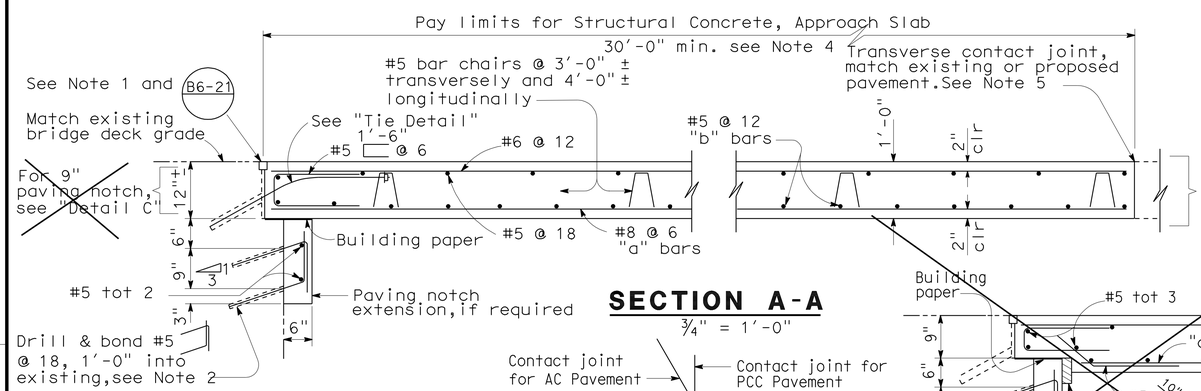


## SECTION A-A
¾" = 1'-0"

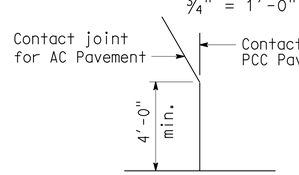


## DETAIL A
No Scale

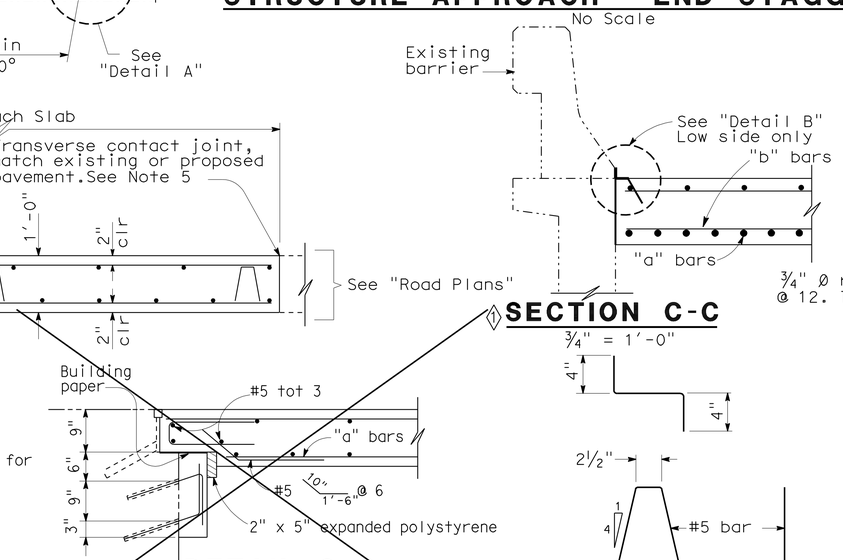


## SECTION C-C
¾" = 1'-0"

## DETAIL C
¾" = 1'-0"

NOTE: For details not shown, see "Section A-A".

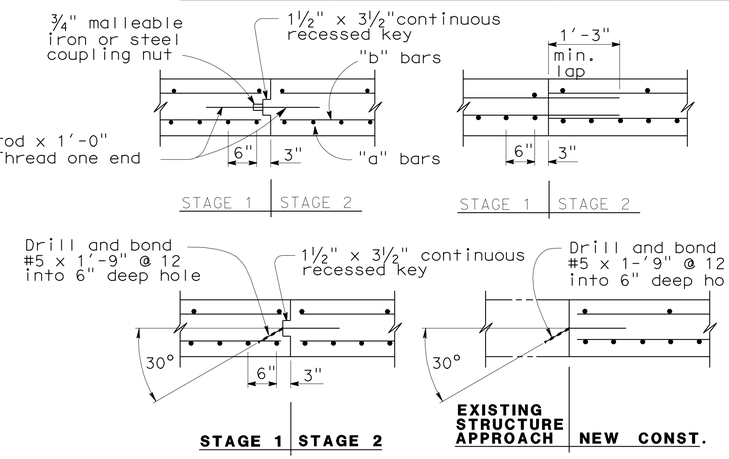


## BAR CHAIR DETAIL
1½" = 1'-0"

## LONGITUDINAL CONSTRUCTION JOINT ALTERNATIVES
¾" = 1'-0"

**NOTES:**

1. For details not shown or noted, see Structure Plans. Adjust bar reinforcement to clear a sawcut for sealed joint, when required.
2. Space to avoid existing prestress anchorages and main reinforcement.
3. Longitudinal construction joints, when permitted by the Engineer, shall be located on lane lines.
4. Transverse contact joint shall be a minimum of 5'-0" from an existing or constructed weakened plane joint.
5. For transverse contact joint with new PCC paving, refer to Revised Standard Plan P10.
6. Couplers are required for stage construction.
7. End angle or plate at beginning of barrier transition, end of wingwall or end of structure approach as applicable.

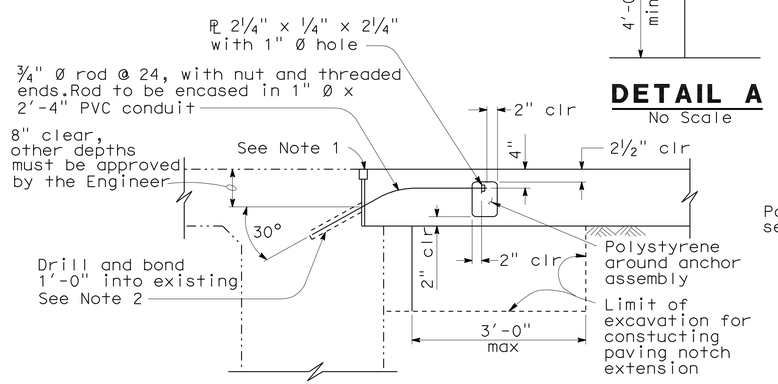


## TIE DETAIL
¾" = 1'-0"

NOTE:
THE CONTRACTOR SHALL VERIFY ALL CONTROLLING FIELD DIMENSIONS BEFORE ORDERING OR FABRICATING ANY MATERIAL.

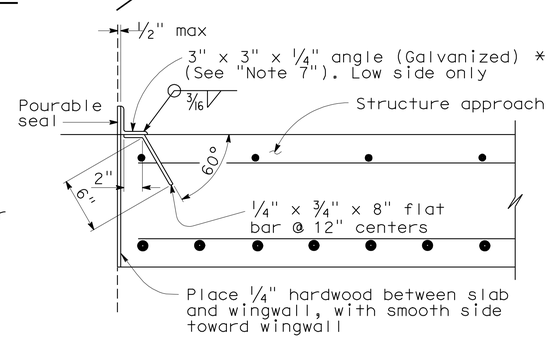


(2) *(TO BE USED WITH TYPE 25 CONCRETE BARRIER)

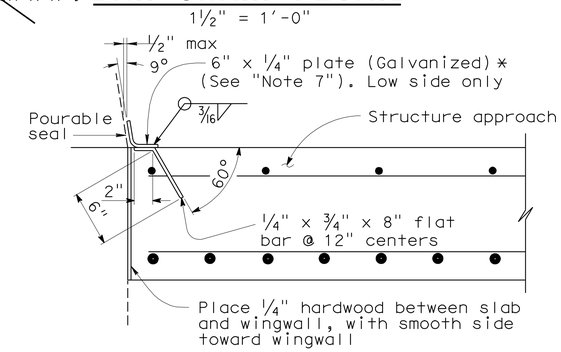


(1) * (TO BE USED WITH TYPE 60 CONCRETE BARRIER)

## DETAIL B
1½" = 1'-0"

STANDARD DRAWING

FILE NO. xs3-140e

APPROVED BY X — RESPONSIBLE TECHNICAL SPECIALIST
APPROVAL DATE X-X-X

RELEASED BY — RESPONSIBLE OFFICE CHIEF
RELEASE DATE 03-14-05

(1) Deleted Details (3) Revised Notes
(2) Revised Detail

STATE OF CALIFORNIA DEPARTMENT OF TRANSPORTATION

DIVISION OF ENGINEERING SERVICES

BRIDGE NO. VARIOUS
POST MILE VARIOUS

ROUTE 91 BRIDGES
STRUCTURE APPROACH TYPE R(30D)

DS OSD 2147A (ENGLISH STANDARD DRAWING "XS" BORDER REV. (08-10-10)

ORIGINAL SCALE IN INCHES FOR REDUCED PLANS 0 1 2 3

UNIT: 3621
PROJECT NUMBER & PHASE: 1200020045 1 CONTRACT NO.: 12-0H0291

DISREGARD PRINTS BEARING EARLIER REVISION DATES

REVISION DATES: 12-15-10 03-17-11 03-21-11

SHEET 10 OF 10

FILE => 10_EA12-0H0291-s-sa.dgn

USERNAME => s124496 DATE PLOTTED => 20-JUN-2011 TIME PLOTTED => 13:43