Dist	COUNTY	ROUTE	POST MILES TOTAL PROJECT	SHEET No.	TOTAL SHEETS
12	Ora	57	20.9	1	19

INDEX OF PLANS

SHEET No.	DESCRIPTION
1	TITLE AND LOCATION MAP
2	TYPICAL CROSS SECTIONS
3	LAYOUT
4-6	CONSTRUCTION DETAILS
7-8	TEMPORARY WATER POLLUTION CONTROL DETAILS
9	UTILITY PLAN
10	CONSTRUCTION AREA SIGNS
11-12	TRAFFIC HANDLING PLANS
13-14	PAVEMENT DELINEATION PLAN AND QUANTITIES
15	SUMMARY OF QUANTITIES
16-19	REVISED AND NEW STANDARD PLANS

THE STANDARD PLANS LIST APPLICABLE TO THIS CONTRACT IS INCLUDED IN THE NOTICE TO BIDDERS AND SPECIAL PROVISIONS BOOK.

STATE OF CALIFORNIA

DEPARTMENT OF TRANSPORTATION

PROJECT PLANS FOR CONSTRUCTION ON

STATE HIGHWAY

IN ORANGE COUNTY

IN BREA

AT LAMBERT ROAD UNDERCROSSING

TO BE SUPPLEMENTED BY STANDARD PLANS DATED MAY 2006

LOCATION MAP

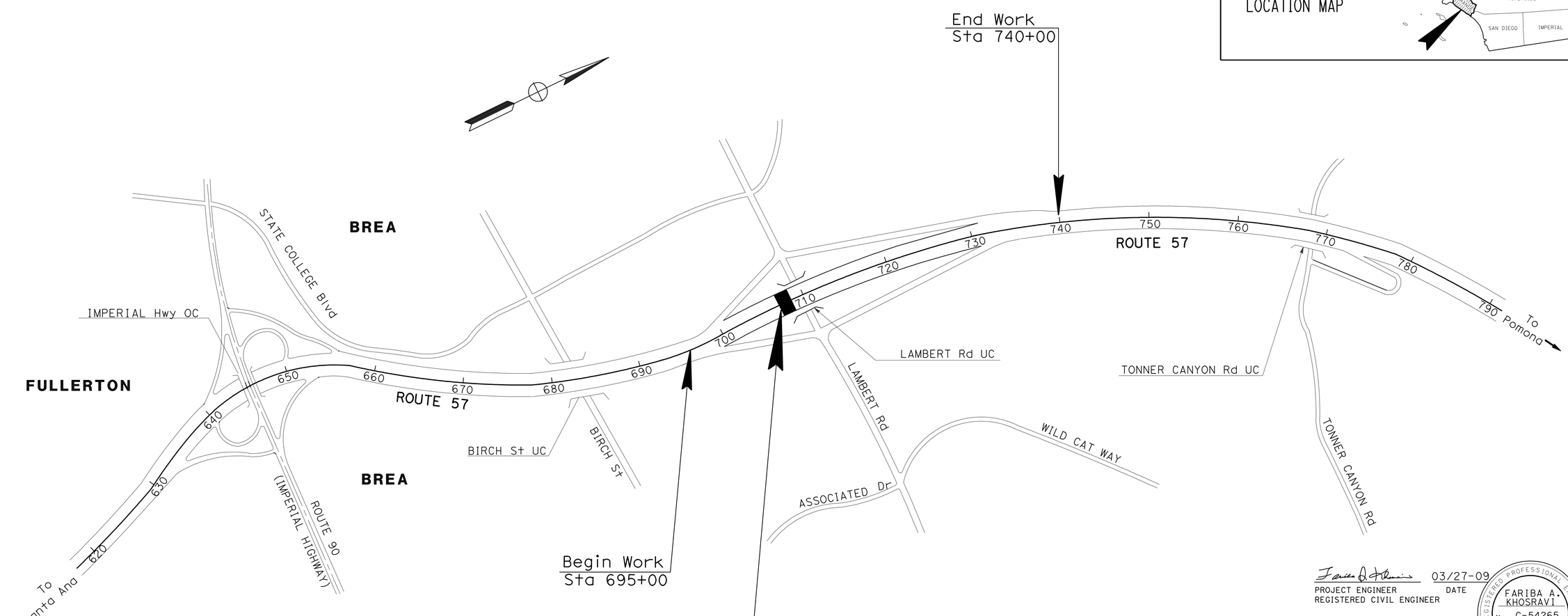

LOCATION OF CONSTRUCTION
PM 20.9

NO SCALE

THE CONTRACTOR SHALL POSSESS THE CLASS (OR CLASSES) OF LICENSE AS SPECIFIED IN THE "NOTICE TO BIDDERS."

PROJECT MANAGER: PIJA ANSARI

DESIGN ENGINEER: FARIBA A. KHOSRAVI

03/27-09
PROJECT ENGINEER REGISTERED CIVIL ENGINEER — DATE

REGISTERED PROFESSIONAL ENGINEER
FARIBA A. KHOSRAVI
No. C-54265
Exp. 12/31/09
CIVIL
STATE OF CALIFORNIA

April 20, 2009
PLANS APPROVAL DATE

THE STATE OF CALIFORNIA OR ITS OFFICERS OR AGENTS SHALL NOT BE RESPONSIBLE FOR THE ACCURACY OR COMPLETENESS OF SCANNED COPIES OF THIS PLAN SHEET.

CONTRACT No. **12-0J5404**

LAST REVISION 03-23-09

DATE PLOTTED => 15-JUL-2009
TIME PLOTTED => 12:52

Dist	COUNTY	ROUTE	POST MILES TOTAL PROJECT	SHEET No.	TOTAL SHEETS
12	Ora	57	20.9	2	19

REGISTERED CIVIL ENGINEER 03-27-09 DATE

4-20-09
PLANS APPROVAL DATE

REGISTERED PROFESSIONAL ENGINEER FARIBA A. KHOSRAVI No. C054265 EXP. 12/31/09 CIVIL STATE OF CALIFORNIA

THE STATE OF CALIFORNIA OR ITS OFFICERS OR AGENTS SHALL NOT BE RESPONSIBLE FOR THE ACCURACY OR COMPLETENESS OF SCANNED COPIES OF THIS PLAN SHEET.

NOTES:

1. DIMENSIONS OF THE STRUCTURAL SECTIONS ARE SUBJECT TO TOLERANCES SPECIFIED IN THE STANDARD SPECIFICATIONS.
2. FOR OTHER DETAILS OF SLOPE PAVING AESTHETIC TREATMENT, SEE SHEET C-2 & C-3.
3. SUPERELEVATION AS SHOWN OR AS DIRECTED BY THE ENGINEER.

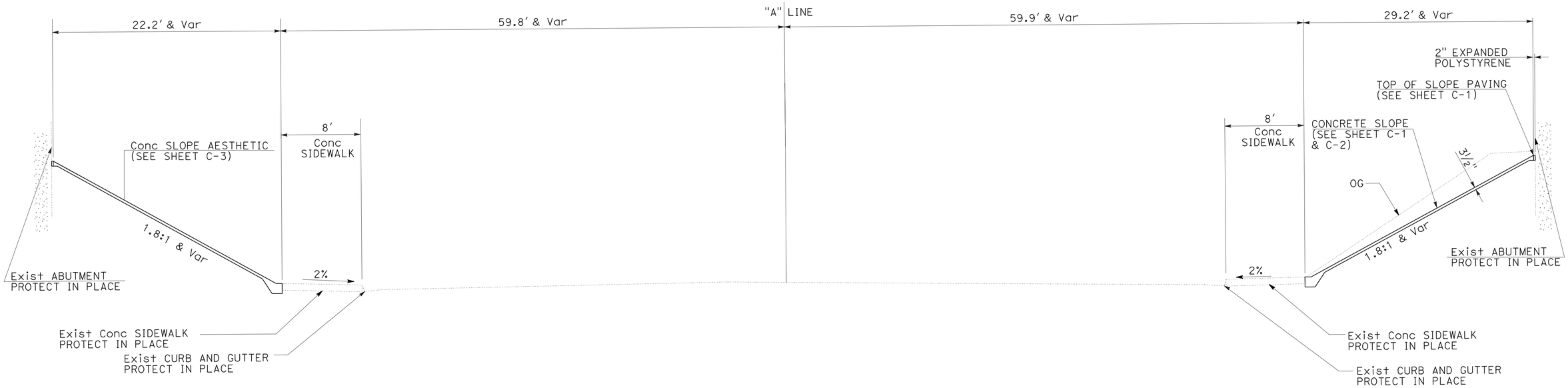

CONCRETE SLOPE AESTHETIC

WESTBOUND LAMBERT ROAD

CONCRETE SLOPE PAVING & AESTHETIC
STA 29+22.79 TO 30+75.00 "A" LINE

EASTBOUND LAMBERT ROAD

TYPICAL CROSS SECTIONS

NO SCALE

X-1

REVISED BY	DATE REVISED
FK	03-27-09

CALCULATED-DESIGNED BY: FARIBA KHOSRAVI
CHECKED BY: FARIBA KHOSRAVI

FUNCTIONAL SUPERVISOR: SUSAN YEE

STATE OF CALIFORNIA - DEPARTMENT OF TRANSPORTATION
Caltrans® **DESIGN**

LAST REVISION 03-27-09 | DATE PLOTTED => 15-JUL-2009 | TIME PLOTTED => 12:52

Dist	COUNTY	ROUTE	POST MILES TOTAL PROJECT	SHEET No.	TOTAL SHEETS
12	Ora	57	20.9	3	19

REGISTERED CIVIL ENGINEER 03-27-09 DATE

4-20-09
PLANS APPROVAL DATE

REGISTERED PROFESSIONAL ENGINEER FARIBA A. KHOSRAVI No. C054265 Exp. 12/31/09 CIVIL STATE OF CALIFORNIA

THE STATE OF CALIFORNIA OR ITS OFFICERS OR AGENTS SHALL NOT BE RESPONSIBLE FOR THE ACCURACY OR COMPLETENESS OF SCANNED COPIES OF THIS PLAN SHEET.

NOTE:

1. FOR COMPLETE RIGHT OF WAY AND ACCURATE ACCESS DATA, SEE DISTRICT RIGHT OF WAY RECORD MAPS AT DISTRICT OFFICE.

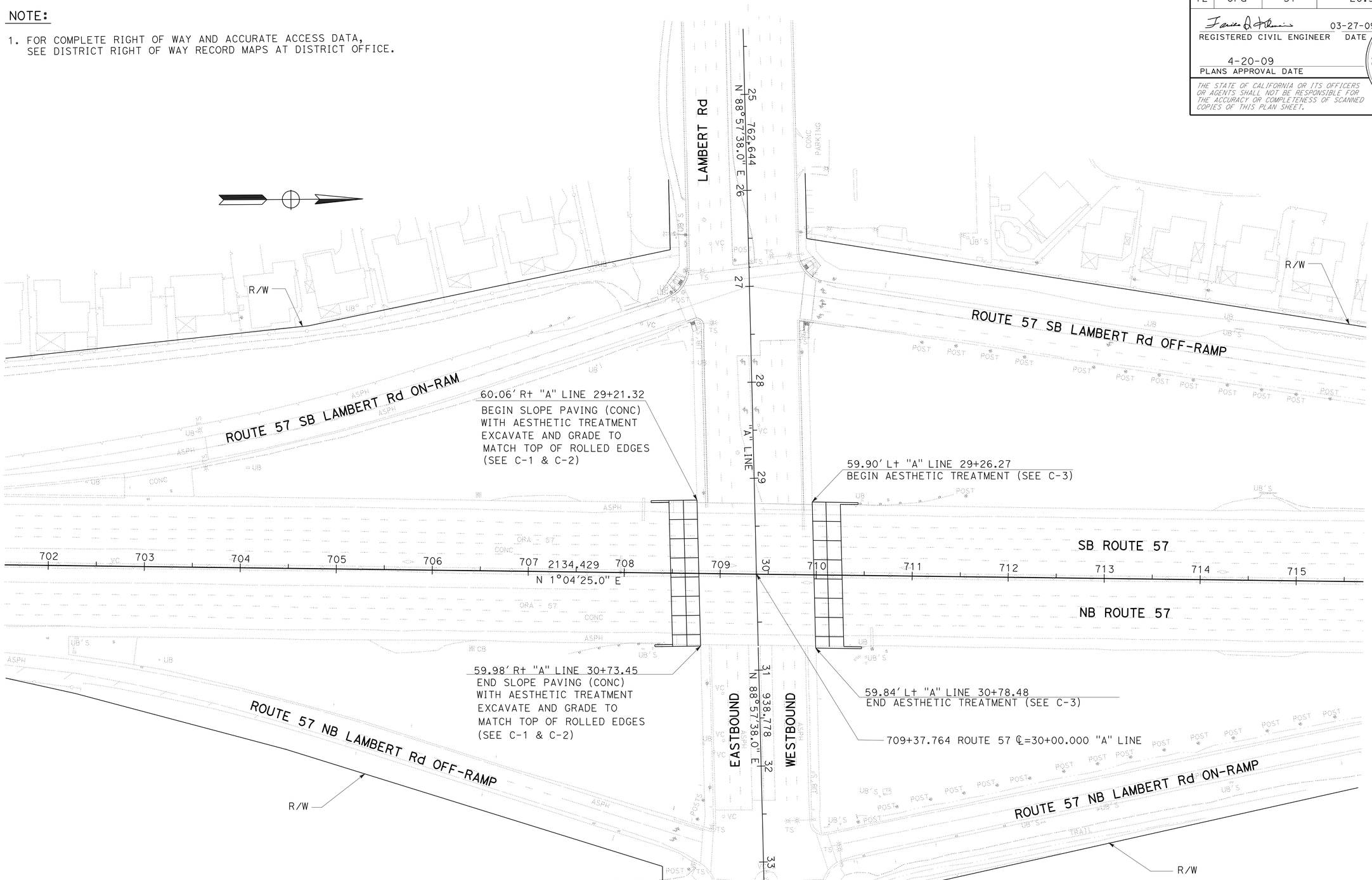

LAYOUT

SCALE: 1"=50'

L-1

STATE OF CALIFORNIA - DEPARTMENT OF TRANSPORTATION

Caltrans

DESIGN

FUNCTIONAL SUPERVISOR: SUSAN YEE

CALCULATED-DESIGNED BY: FARIBA KHOSRAVI

CHECKED BY: FARIBA KHOSRAVI

REVISED BY: FK

DATE REVISED: 03-27-09

LAST REVISION 03-27-09

DATE PLOTTED => 15-JUL-2009
TIME PLOTTED => 12:53

BORDER LAST REVISED 4/11/2008

RELATIVE BORDER SCALE IS IN INCHES 0 1 2 3

USERNAME => trmariak
DGN FILE => c0j540ea001.dgn

CU 12234

EA 0J5401

Dist	COUNTY	ROUTE	POST MILES TOTAL PROJECT	SHEET No.	TOTAL SHEETS
12	Ora	57	20.9	4	19

REGISTERED CIVIL ENGINEER DATE 03-27-09

PLANS APPROVAL DATE 4-20-09

REGISTERED PROFESSIONAL ENGINEER FARIBA A. KHOSRAVI No. C054265 EXP. 12/31/09 CIVIL STATE OF CALIFORNIA

THE STATE OF CALIFORNIA OR ITS OFFICERS OR AGENTS SHALL NOT BE RESPONSIBLE FOR THE ACCURACY OR COMPLETENESS OF SCANNED COPIES OF THIS PLAN SHEET.

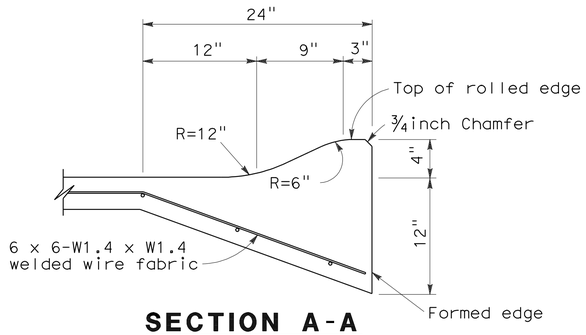

SECTION A-A

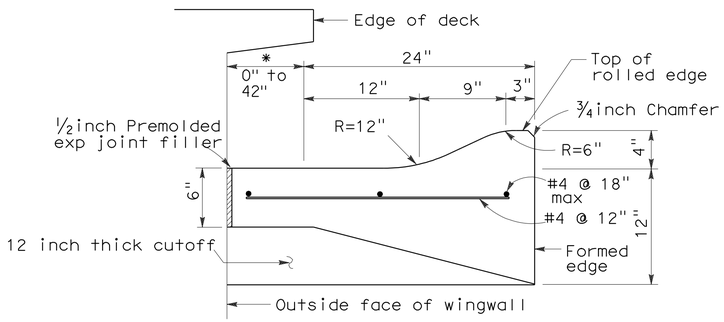

SECTION B-B

*This dimension becomes zero when edge of deck is at outside face of Wing Wall

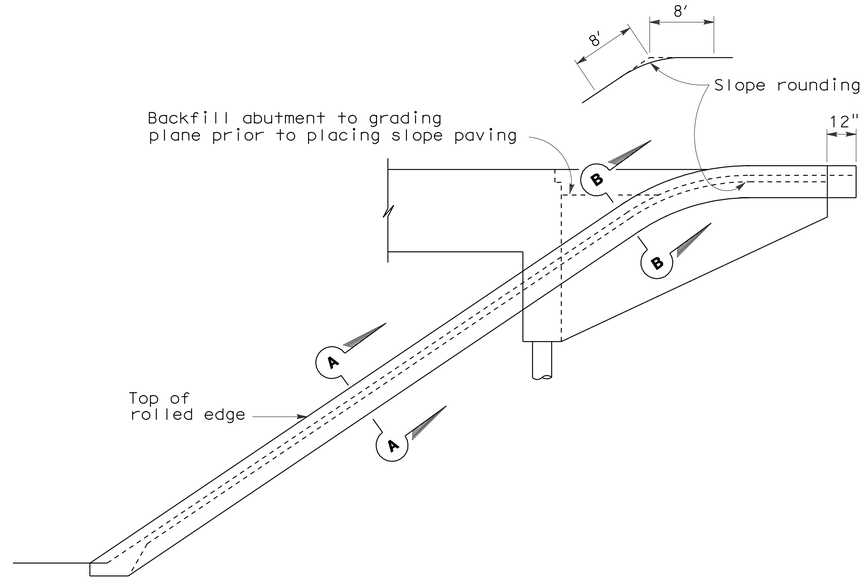

WINGWALL ELEVATION

LEGEND:

LIMIT OF EXPANDED POLYSTYRENE

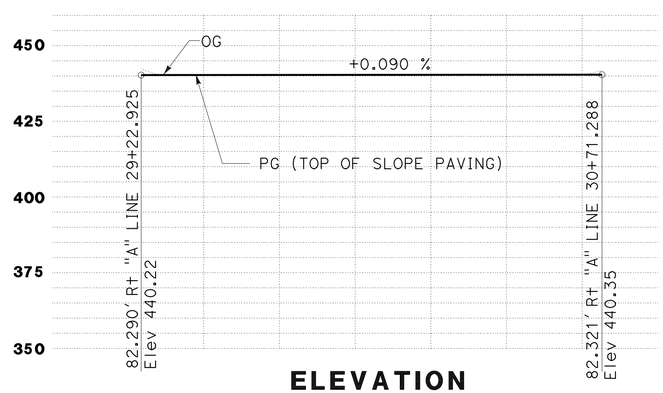

ELEVATION

TOP OF SLOPE PAVING

EASTBOUND LAMBERT RD SLOPE PAVING

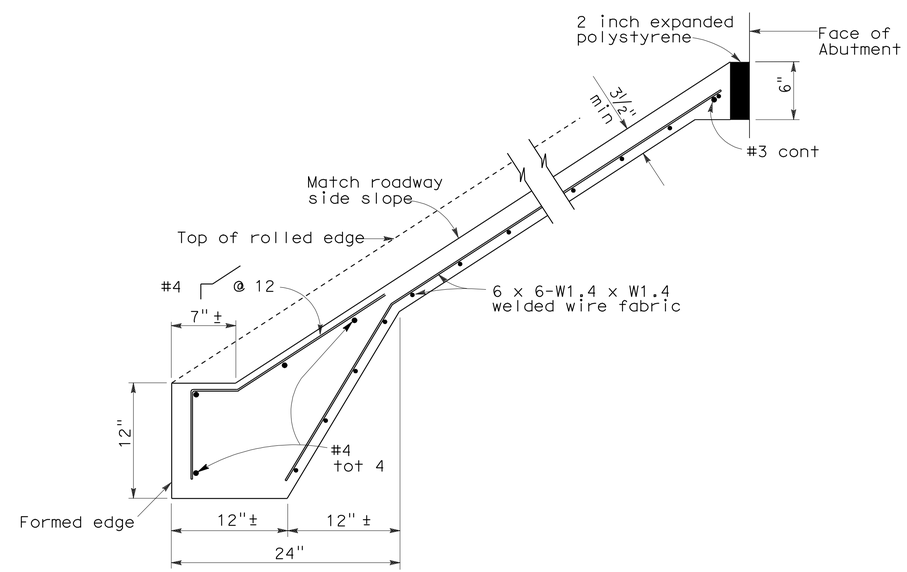

TYPICAL SECTION - CONCRETE SLOPE PAVING

CONSTRUCTION DETAILS

NO SCALE

C-1

STATE OF CALIFORNIA - DEPARTMENT OF TRANSPORTATION

Caltrans

DESIGN

FUNCTIONAL SUPERVISOR: SUSAN YEE

CALCULATED-DESIGNED BY: FARIBA KHOSRAVI

CHECKED BY: FARIBA KHOSRAVI

REVISED BY: FK

DATE REVISED: 03-27-09

LAST REVISION 03-23-09 | DATE PLOTTED => 15-JUL-2009 | TIME PLOTTED => 12:53

Dist	COUNTY	ROUTE	POST MILES TOTAL PROJECT	SHEET No.	TOTAL SHEETS
12	Ora	57	20.9	5	19

LICENSED LANDSCAPE ARCHITECT 03-27-09

4-20-09
PLANS APPROVAL DATE

LICENSED LANDSCAPE ARCHITECT I-HONG SUN 12-31-10 REVIEW DATE 03-27-09 DATE STATE OF CALIFORNIA

THE STATE OF CALIFORNIA OR ITS OFFICERS OR AGENTS SHALL NOT BE RESPONSIBLE FOR THE ACCURACY OR COMPLETENESS OF SCANNED COPIES OF THIS PLAN SHEET.

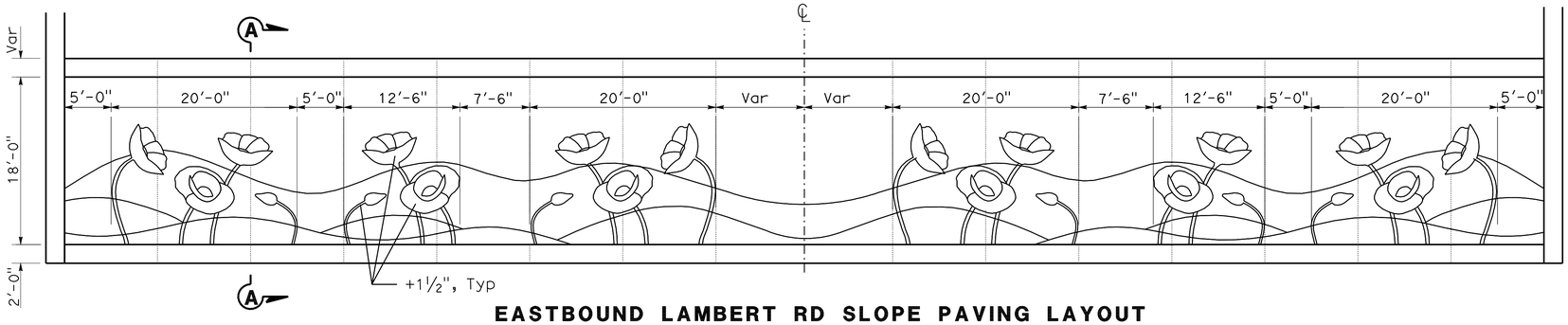

EASTBOUND LAMBERT RD SLOPE PAVING LAYOUT

SCALE: 1" = 8'-0"

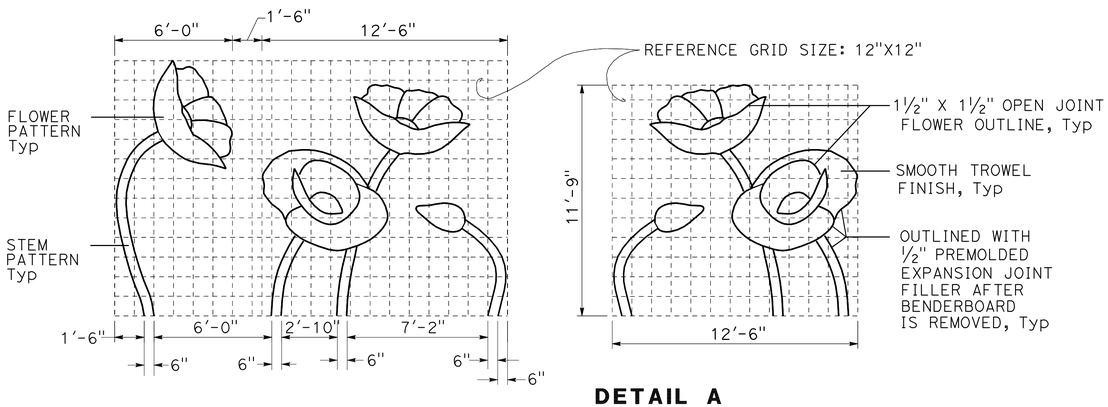

DETAIL A

SCALE: 1" = 4'-0"

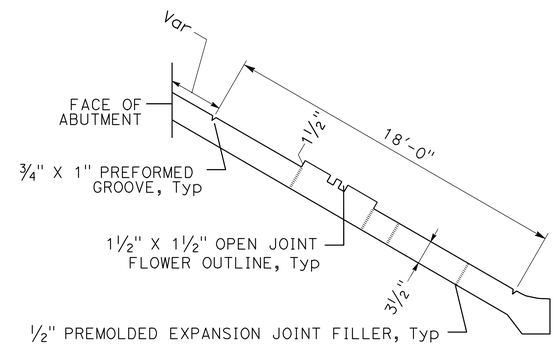

SECTION A-A

NO SCALE

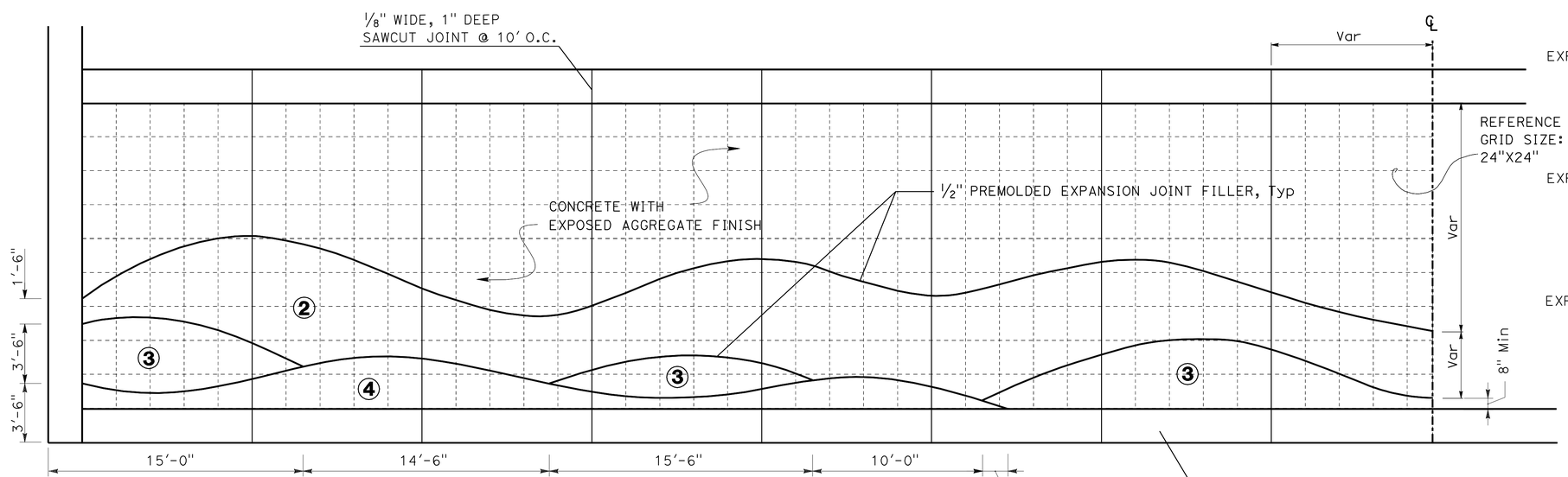

DETAIL B

SCALE: 1" = 4'-0"

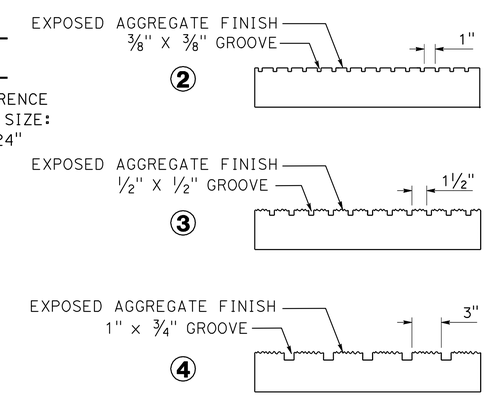

DETAIL C

NO SCALE

CONSTRUCTION DETAILS

NO SCALE

C-2

STATE OF CALIFORNIA - DEPARTMENT OF TRANSPORTATION
LANDSCAPE ARCHITECTURE
Caltrans

SENIOR LANDSCAPE ARCHITECT: ERIC DICKSON
CALCULATED-DESIGNED BY: PAUL SUN
CHECKED BY: ERIC DICKSON
REVISED BY
DATE REVISED

LAST REVISION 03-23-09
DATE PLOTTED => 15-JUL-2009
TIME PLOTTED => 12:53

Dist	COUNTY	ROUTE	POST MILES TOTAL PROJECT	SHEET No.	TOTAL SHEETS
12	Ora	57	20.9	6	19

LICENSED LANDSCAPE ARCHITECT 03-27-09

4-20-09
PLANS APPROVAL DATE

THE STATE OF CALIFORNIA OR ITS OFFICERS OR AGENTS SHALL NOT BE RESPONSIBLE FOR THE ACCURACY OR COMPLETENESS OF SCANNED COPIES OF THIS PLAN SHEET.

LICENSED LANDSCAPE ARCHITECT I-HONG SUN Signature 12-30-10 Renewal Date 03-27-09 Date STATE OF CALIFORNIA

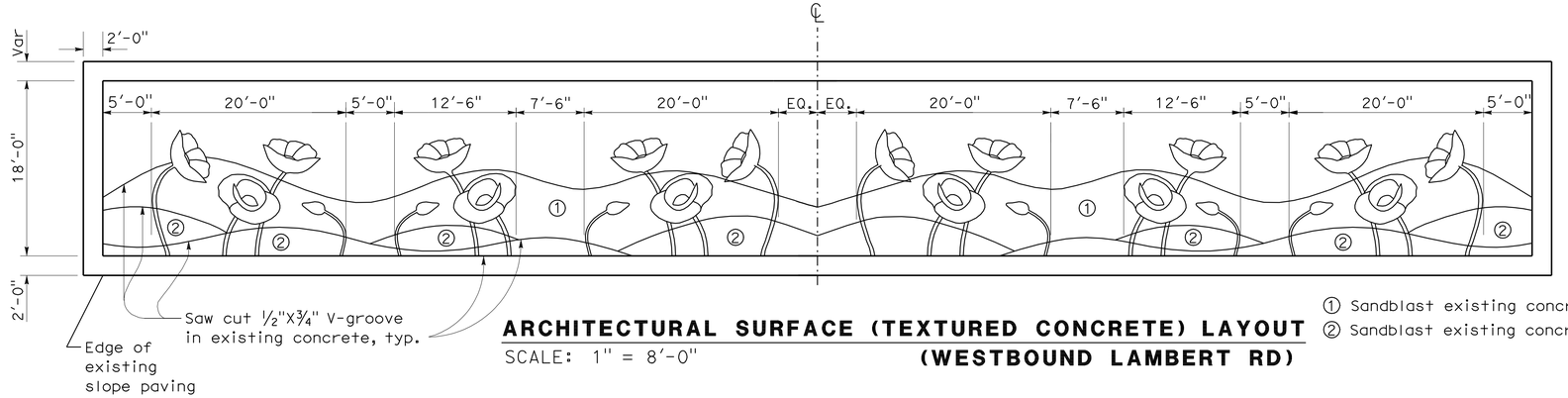

ARCHITECTURAL SURFACE (TEXTURED CONCRETE) LAYOUT (WESTBOUND LAMBERT RD)

SCALE: 1" = 8'-0"

① Sandblast existing concrete, fine texture
② Sandblast existing concrete, coarse texture

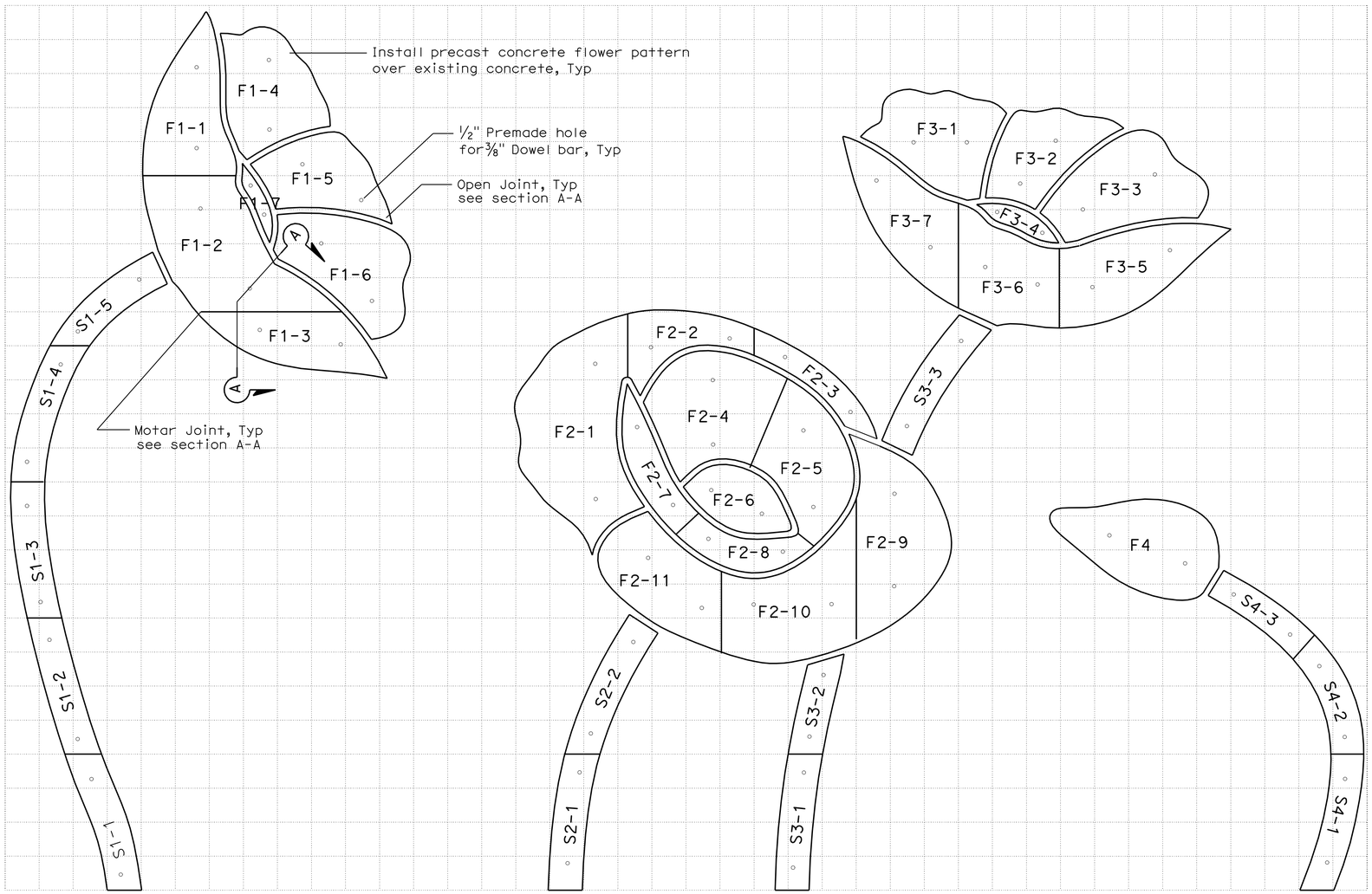

DETAIL C

SCALE: 1" = 1'-0"

REFERENCE GRID SIZE: 6"X6"

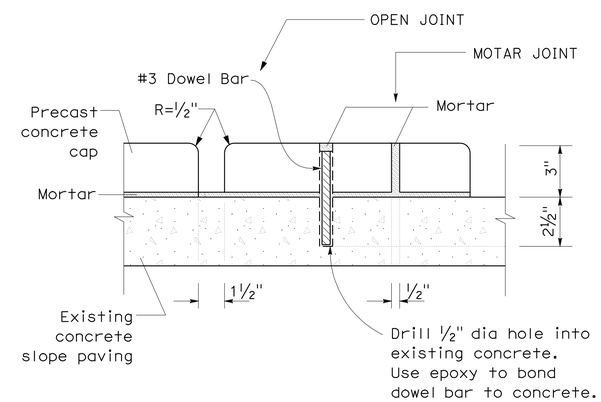

SECTION A-A

NO SCALE

CONSTRUCTION DETAILS

NO SCALE

C-3

STATE OF CALIFORNIA - DEPARTMENT OF TRANSPORTATION
Caltrans
LANDSCAPE ARCHITECTURE

SENIOR LANDSCAPE ARCHITECT: ERIC DICKSON
CALCULATED-DESIGNED BY: PAUL SUN
CHECKED BY: ERIC DICKSON
REVISED BY
DATE REVISED

LAST REVISION 03-23-09
DATE PLOTTED => 15-JUL-2009
TIME PLOTTED => 12:53

Dist	COUNTY	ROUTE	POST MILES TOTAL PROJECT	SHEET No.	TOTAL SHEETS
12	Ora	57	20.9	7	19

REGISTERED CIVIL ENGINEER 03-27-09 DATE

4-20-09
PLANS APPROVAL DATE

REGISTERED PROFESSIONAL ENGINEER FARIBA A. KHOSRAVI No. C054265 EXP. 12/31/09 CIVIL STATE OF CALIFORNIA

THE STATE OF CALIFORNIA OR ITS OFFICERS OR AGENTS SHALL NOT BE RESPONSIBLE FOR THE ACCURACY OR COMPLETENESS OF SCANNED COPIES OF THIS PLAN SHEET.

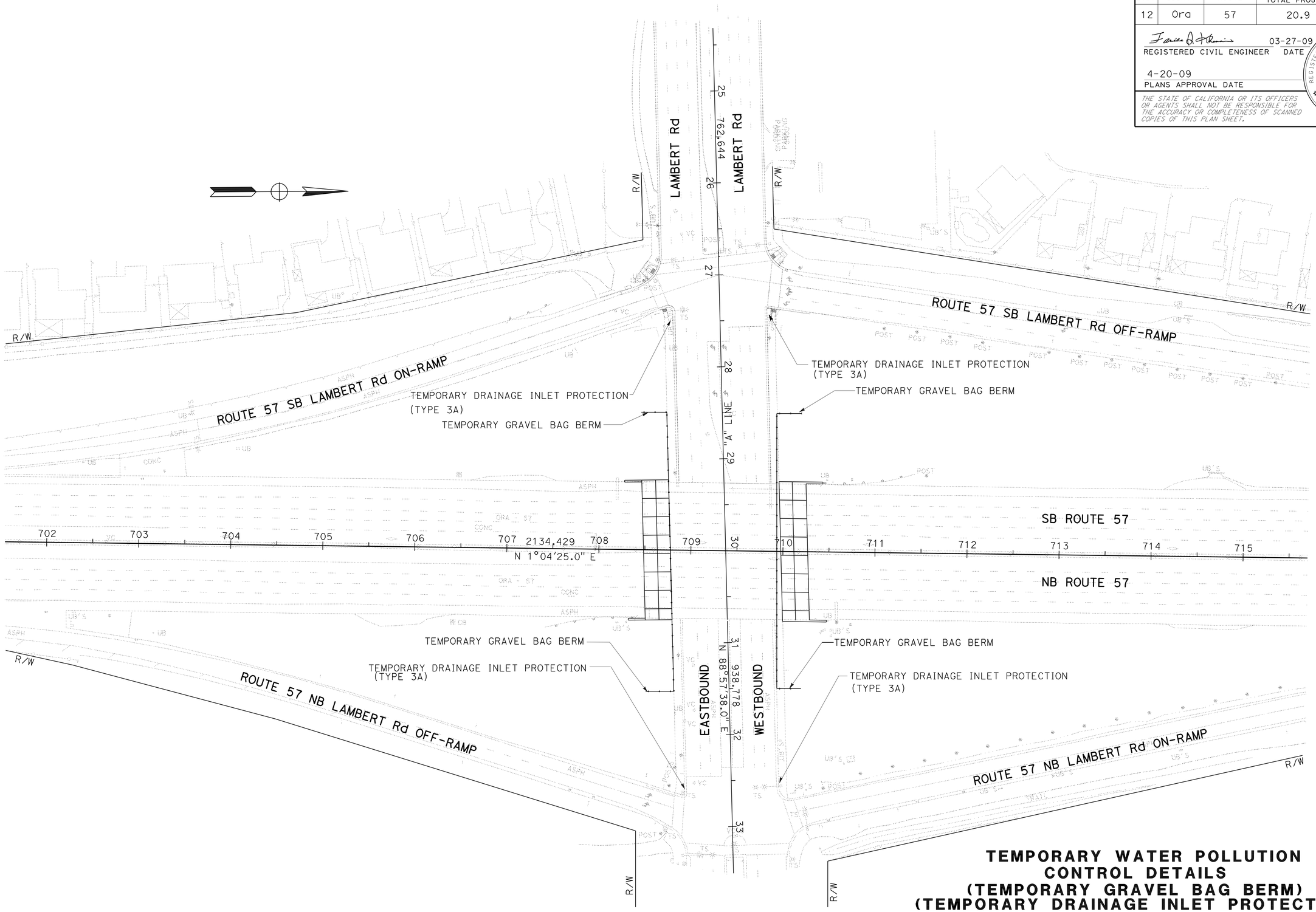

TEMPORARY WATER POLLUTION CONTROL DETAILS (TEMPORARY GRAVEL BAG BERM) (TEMPORARY DRAINAGE INLET PROTECTION)

NO SCALE

WPC-1

REVISED BY	FK
DATE REVISED	03-27-09
FARIBA KHOSRAVI	
FARIBA KHOSRAVI	
CALCULATED-DESIGNED BY	
CHECKED BY	
FUNCTIONAL SUPERVISOR	
SUSAN YEE	

STATE OF CALIFORNIA - DEPARTMENT OF TRANSPORTATION

Caltrans®

DESIGN

LAST REVISION 03-27-09 | DATE PLOTTED => 15-JUL-2009 | TIME PLOTTED => 12:53

Dist	COUNTY	ROUTE	POST MILES TOTAL PROJECT	SHEET No.	TOTAL SHEETS
12	Ora	57	20.9	8	19

REGISTERED CIVIL ENGINEER 03-27-09 DATE

4-20-09
PLANS APPROVAL DATE

REGISTERED PROFESSIONAL ENGINEER FARIBA A. KHOSRAVI No. C054265 Exp. 12/31/09 CIVIL STATE OF CALIFORNIA

THE STATE OF CALIFORNIA OR ITS OFFICERS OR AGENTS SHALL NOT BE RESPONSIBLE FOR THE ACCURACY OR COMPLETENESS OF SCANNED COPIES OF THIS PLAN SHEET.

GRAVEL BAG BARRIER (TYPE 3A) SPACING TABLE

SLOPE OF ROADWAY (PERCENT)	1 to 4	4 to 6	6 to 8	8 to 10	10+
INTERVAL BETWEEN BARRIERS (FT)	100'	75'	50'	25'	12'

For slope of less than 1%, install barriers only if erosion/sediment is prevalent

TEMPORARY WATER POLLUTION CONTROL QUANTITY SUMMARY

		TEMPORARY GRAVEL BAG BERM	TEMPORARY DRAINAGE INLET PROTECTION	TEMPORARY CONCRETE WASHOUT (PORTABLE)
SHEET	LOCATION	LF	EA	EA
WPC-1	"LAMBERT RD" 28+50 TO 31+50	700		1
WPC-1	"LAMBERT RD" , SEE WPC-1		4	
TOTAL		700	4	1

NOTES

1. All existing drainage inlets or facilities should be protected in place.
2. Place safety cones adjacent to drainage inlet protection.
3. Dimensions may vary to fit field conditions.
4. Install a minimum of 3 gravel bag barriers upstream of each drainage inlet to be protected.

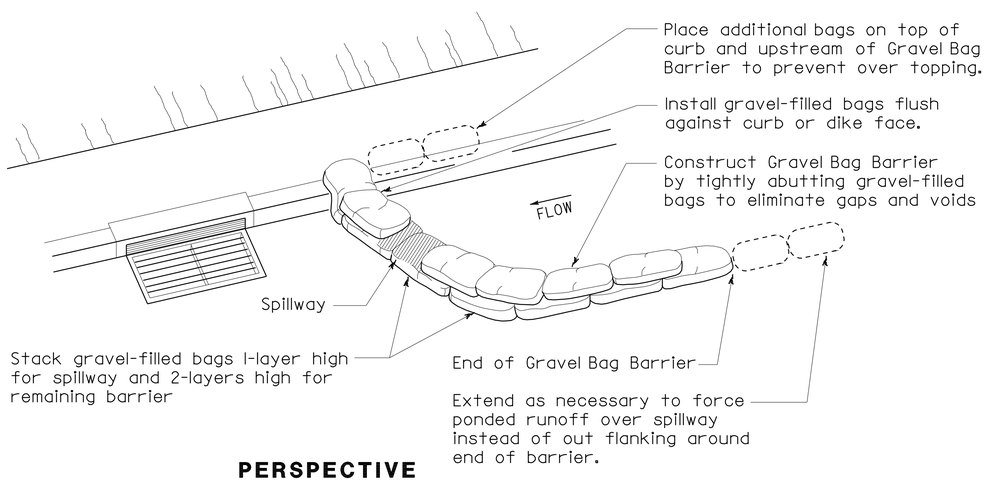

PERSPECTIVE

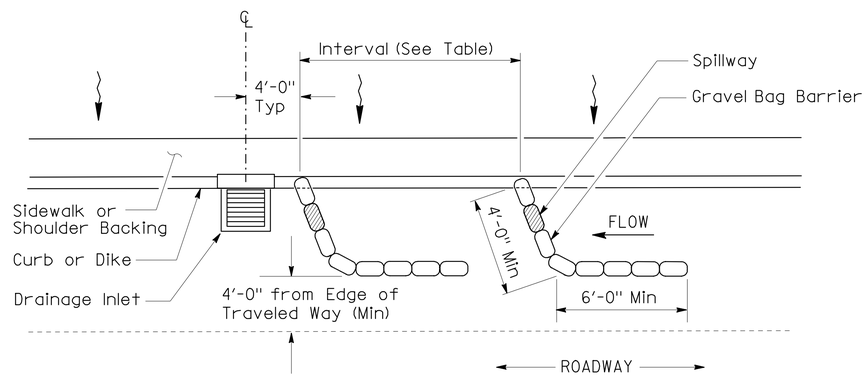

PLAN

TEMPORARY DRAINAGE INLET PROTECTION (TYPE 3A) (GRAVEL BAG BARRIER)

TEMPORARY WATER POLLUTION CONTROL DETAILS (TEMPORARY DRAINAGE INLET PROTECTION)

NO SCALE

THIS PLAN ACCURATE FOR TEMPORARY WATER POLLUTION CONTROL PLAN ONLY

WPCD-1

STATE OF CALIFORNIA - DEPARTMENT OF TRANSPORTATION
Caltrans DESIGN
FUNCTIONAL SUPERVISOR: SUSAN YEE
CALCULATED-DESIGNED BY: FARIBA KHOSRAVI
CHECKED BY: FARIBA KHOSRAVI
REVISED BY: FK
DATE REVISED: 03-27-09

LAST REVISION 03-27-09
DATE PLOTTED => 15-JUL-2009
TIME PLOTTED => 12:53

Dist	COUNTY	ROUTE	POST MILES TOTAL PROJECT	SHEET No.	TOTAL SHEETS
12	Ora	57	20.9	9	19

REGISTERED CIVIL ENGINEER 03-27-09 DATE

4-20-09
PLANS APPROVAL DATE

REGISTERED PROFESSIONAL ENGINEER FARIBA A. KHOSRAVI No. C054265 EXP. 12/31/09 CIVIL STATE OF CALIFORNIA

THE STATE OF CALIFORNIA OR ITS OFFICERS OR AGENTS SHALL NOT BE RESPONSIBLE FOR THE ACCURACY OR COMPLETENESS OF SCANNED COPIES OF THIS PLAN SHEET.

NOTE:

1- LOCATION OF UTILITY FACILITIES SHOWN ON THESE PLANS WERE OBTAINED FROM OWNERS RECORDS. THESE UTILITY MAPS ARE FOR REFERENCE ONLY, SUBJECT TO CHANGE, AND MAY NOT BE ACCURATE.
2- ALL INFORMATION SHOWN ON THESE PLANS SHALL BE FIELD VERIFIED.
3- ALL HIGH RISK UTILITIES REQUIRE MINIMUM 2 FEET CLEARANCE FROM ANY SIDES.
4- ALL UTILITY FACILITIES SHALL BE PROTECTED IN PLACE UNLESS OTHERWISE SHOWN.

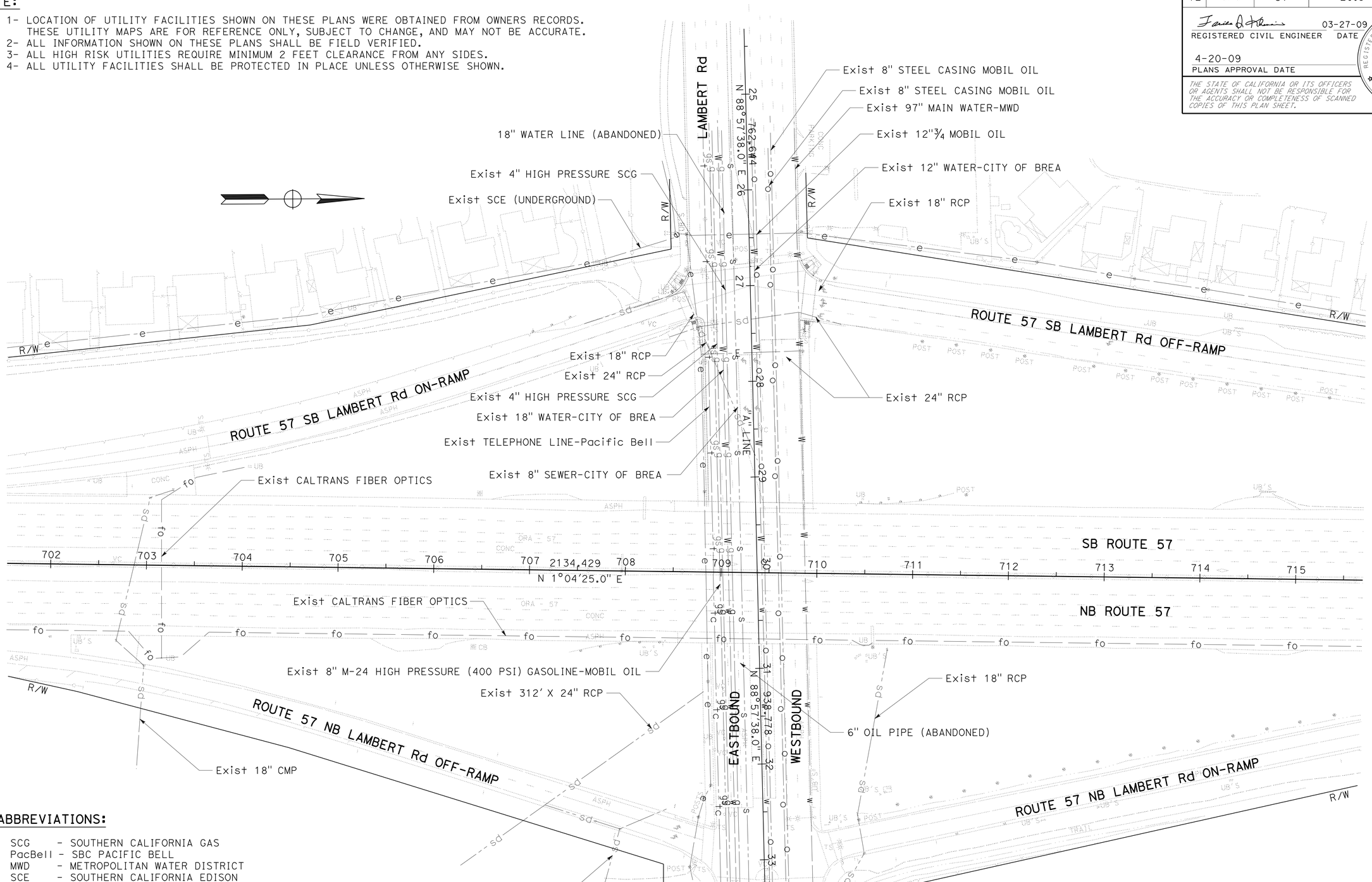

ABBREVIATIONS:

SCG - SOUTHERN CALIFORNIA GAS
PacBell - SBC PACIFIC BELL
MWD - METROPOLITAN WATER DISTRICT
SCE - SOUTHERN CALIFORNIA EDISON

UTILITY

SCALE: 1"=50'

U-1

REVISED BY	DATE REVISED
FK	03-27-09

FARIBA KHOSRAVI — FARIBA KHOSRAVI

CALCULATED-DESIGNED BY — CHECKED BY

FUNCTIONAL SUPERVISOR: SUSAN YEE

STATE OF CALIFORNIA - DEPARTMENT OF TRANSPORTATION — DESIGN

LAST REVISION 03-27-09 | DATE PLOTTED => 15-JUL-2009 | TIME PLOTTED => 12:54

Dist	COUNTY	ROUTE	POST MILES TOTAL PROJECT	SHEET No.	TOTAL SHEETS
12	Ora	57	20.9	10	19

REGISTERED CIVIL ENGINEER 03-27-09 DATE

4-20-09
PLANS APPROVAL DATE

REGISTERED PROFESSIONAL ENGINEER FARIBA A. KHOSRAVI No. C054265 EXP. 12/31/09 CIVIL STATE OF CALIFORNIA

THE STATE OF CALIFORNIA OR ITS OFFICERS OR AGENTS SHALL NOT BE RESPONSIBLE FOR THE ACCURACY OR COMPLETENESS OF SCANNED COPIES OF THIS PLAN SHEET.

NOTE:

1- LOCATIONS OF CONSTRUCTION AREA SIGNS AND PCMS SHOWN ARE APPROXIMATE EXACT LOCATIONS TO BE DETERMINED BY THE ENGINEER.

LEGEND:

CONSTRUCTION AREA SIGN 1 POST, STATIONARY MOUNTED

PCMS (PORTABLE CHANGEABLE MESSAGE SIGN)

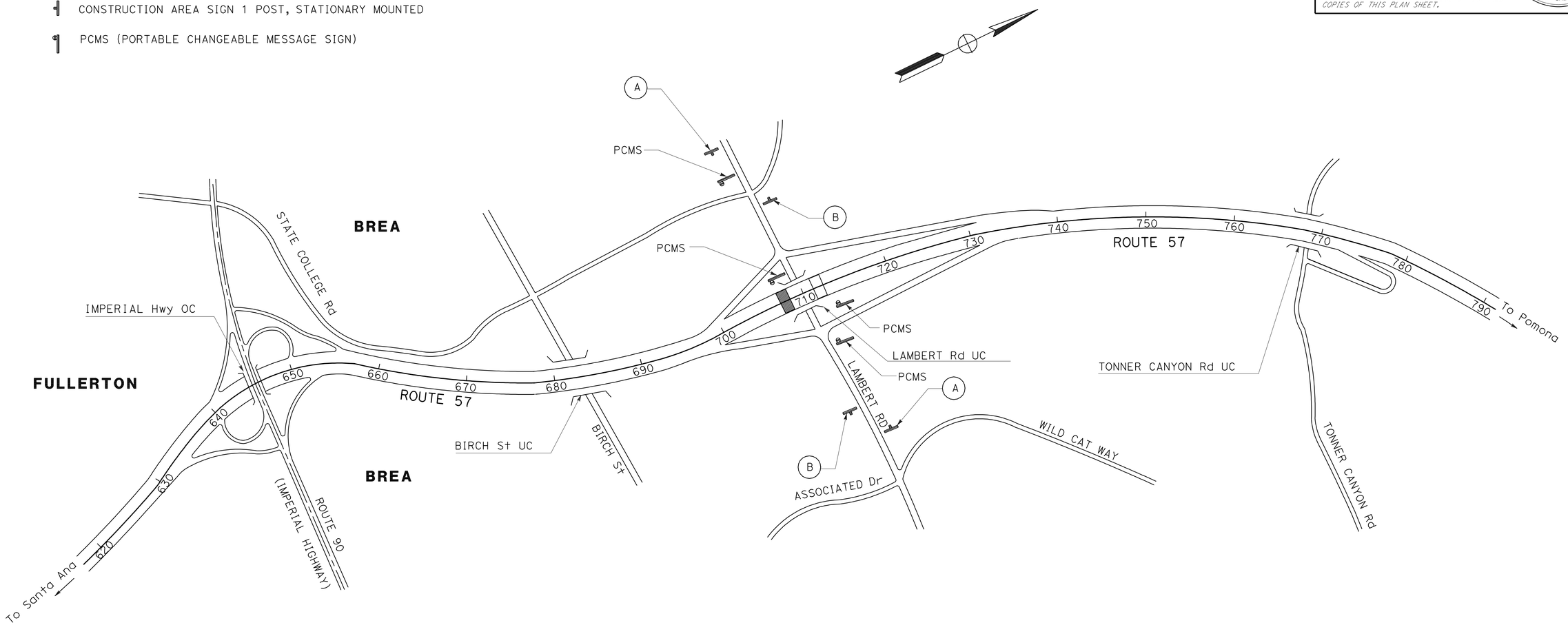

CONSTRUCTION AREA SIGNS

SIGN No.	TYPE	PANEL SIZE	SIGN MESSAGE	No. OF POST AND SIZE	No. OF SIGNS
A	W20-1	30" x 30"	ROAD WORK AHEAD	1-4" x 4"	2
B	G20-2	36" x 18"	END ROAD WORK	1-4" x 4"	2
			TOTAL		4

PORTABLE CHANGEABLE MESSAGE SIGN (PMCS)

SIGN CODE	SIGN MESSAGE	No. OF SIGNS
PMCS	TO BE DETERMINED BY THE ENGINEER	4

THIS PLAN ACCURATE FOR CONSTRUCTION AREA SIGN ONLY

CONSTRUCTION AREA SIGNS

NO SCALE

CS-1

STATE OF CALIFORNIA - DEPARTMENT OF TRANSPORTATION
DESIGN
Caltrans

FUNCTIONAL SUPERVISOR: SUSAN YEE
CALCULATED-DESIGNED BY: FARIBA KHOSRAVI
CHECKED BY: FARIBA KHOSRAVI
REVISED BY: FK
DATE REVISED: 03-27-09

LAST REVISION 03-27-09
DATE PLOTTED => 15-JUL-2009
TIME PLOTTED => 12:54

Dist	COUNTY	ROUTE	POST MILES TOTAL PROJECT	SHEET No.	TOTAL SHEETS
12	Ora	57	20.9	11	19

REGISTERED CIVIL ENGINEER 03-27-09 DATE

4-20-09
PLANS APPROVAL DATE

REGISTERED PROFESSIONAL ENGINEER FARIBA A. KHOSRAVI No. C054265 EXP. 12/31/09 CIVIL STATE OF CALIFORNIA

THE STATE OF CALIFORNIA OR ITS OFFICERS OR AGENTS SHALL NOT BE RESPONSIBLE FOR THE ACCURACY OR COMPLETENESS OF SCANNED COPIES OF THIS PLAN SHEET.

NOTE:

1-LOCATIONS OF CONSTRUCTION AREA SIGNS, BARRICADES, AND PCMS SHOWN ARE APPROXIMATE. EXACT LOCATIONS TO BE DETERMINED BY THE ENGINEER.

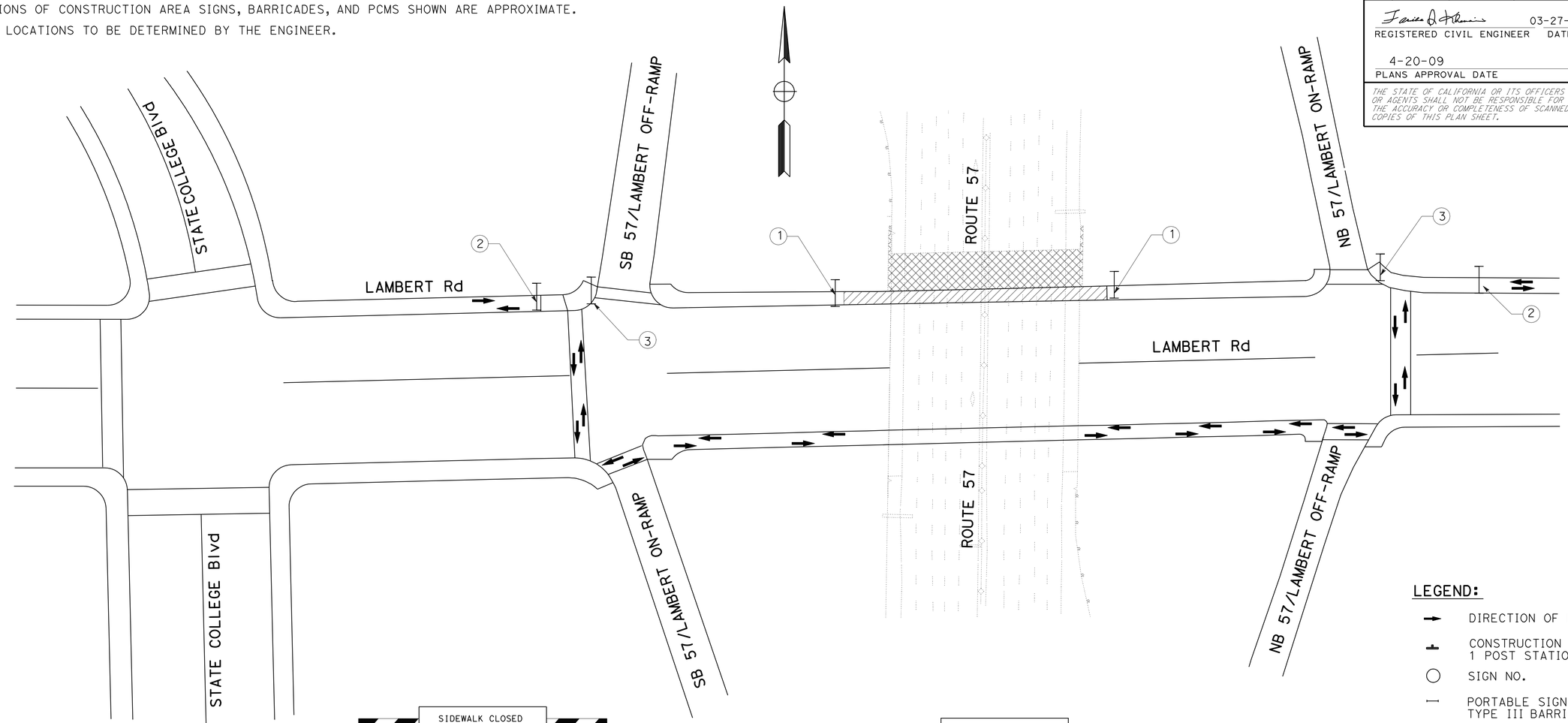

LEGEND:

- DIRECTION OF PEDESTRIANS
- CONSTRUCTION AREA SIGN 1 POST STATIONARY MOUNTED
- SIGN NO.
- PORTABLE SIGN MOUNTED ON TYPE III BARRICADE
- SIDEWALK CLOSED
- CONSTRUCTION AREA

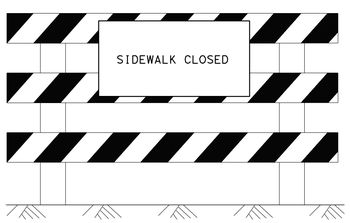

TYPE III BARRICADE

SIGN R9-9

1

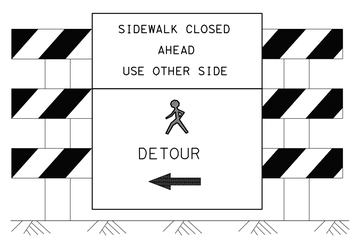

TYPE III BARRICADE

SIGN R9-10
M4-9b (LEFT, RIGHT)

2

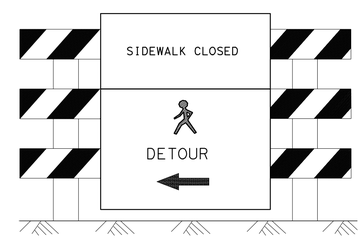

TYPE III BARRICADE

SIGN R9-9
M4-9b (LEFT, RIGHT)

3

CONSTRUCTION AREA SIGNS (PORTABLE)

SIGN NO	CODE	PANEL SIZE	SIGN MESSAGE	QUANTITY	TYPE III BARRICADE
1	R9-9	24" x 12"	SIDEWALK CLOSED	2	2
2	R9-10	24" x 12"	SIDEWALK CLOSED AHEAD USE OTHER SIDE	2	2
3	M4-9b	24" x 12"	DETOUR (LEFT,RIGHT)	2	2
TOTAL				6	6

THIS PLAN ACCURATE FOR DETOUR ONLY

STAGE 1
TRAFFIC HANDLING PLAN
(SIDEWALK DETOUR)
(WESTBOUND LAMBERT ROAD)

NO SCALE

TH-1

STATE OF CALIFORNIA - DEPARTMENT OF TRANSPORTATION
Caltrans® DESIGN

FUNCTIONAL SUPERVISOR: SUSAN YEE
CALCULATED-DESIGNED BY: FARIBA KHOSRAVI
CHECKED BY: FARIBA KHOSRAVI
REVISED BY: FK
DATE REVISED: 03-27-09

LAST REVISION 03-27-09 | DATE PLOTTED => 15-JUL-2009 | TIME PLOTTED => 12:54

Dist	COUNTY	ROUTE	POST MILES TOTAL PROJECT	SHEET No.	TOTAL SHEETS
12	Ora	57	20.9	12	19

REGISTERED CIVIL ENGINEER 03-27-09 DATE

4-20-09
PLANS APPROVAL DATE

REGISTERED PROFESSIONAL ENGINEER FARIBA A. KHOSRAVI No. C054265 EXP. 12/31/09 CIVIL STATE OF CALIFORNIA

THE STATE OF CALIFORNIA OR ITS OFFICERS OR AGENTS SHALL NOT BE RESPONSIBLE FOR THE ACCURACY OR COMPLETENESS OF SCANNED COPIES OF THIS PLAN SHEET.

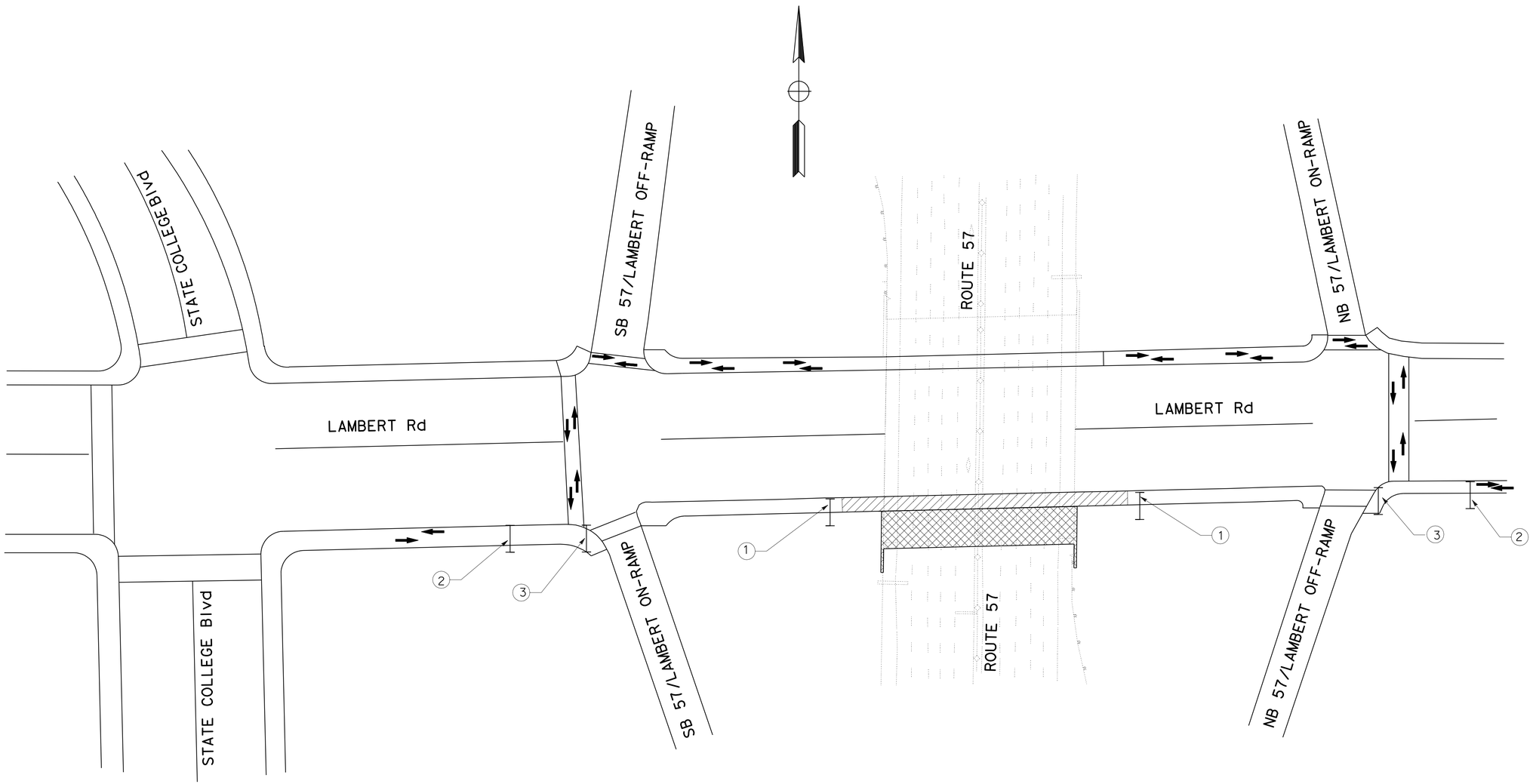

STAGE 2
TRAFFIC HANDLING PLAN
(SIDEWALK DETOUR)
(EASTBOUND LAMBERT ROAD)

NO SCALE

TH-2

THIS PLAN ACCURATE FOR DETOUR ONLY

STATE OF CALIFORNIA - DEPARTMENT OF TRANSPORTATION
Caltrans®
DESIGN

FUNCTIONAL SUPERVISOR: SUSAN YEE
CALCULATED-DESIGNED BY: FARIBA KHOSRAVI
CHECKED BY: FARIBA KHOSRAVI
REVISED BY: FK
DATE REVISED: 03-27-09

LAST REVISION 03-27-09
DATE PLOTTED => 15-JUL-2009
TIME PLOTTED => 12:55

Dist	COUNTY	ROUTE	POST MILES TOTAL PROJECT	SHEET No.	TOTAL SHEETS
12	Ora	57	20.9	13	19

Mostafa Aliakbarzadeh 03-27-09
REGISTERED CIVIL ENGINEER DATE

4-20-09
PLANS APPROVAL DATE

REGISTERED PROFESSIONAL ENGINEER
MOSTAFA ALIAKBARZADEH
No. C-53003
Exp. 03/31/09
CIVIL
STATE OF CALIFORNIA

THE STATE OF CALIFORNIA OR ITS OFFICERS OR AGENTS SHALL NOT BE RESPONSIBLE FOR THE ACCURACY OR COMPLETENESS OF SCANNED COPIES OF THIS PLAN SHEET.

LEGEND:

- (X) PAVEMENT DELINEATION DETAIL
- CHANGE IN PAVEMENT DELINEATION
- S SIGNAL
- A AHEAD

NOTES:

1. ALL CONFLICTING TRAFFIC STRIPE AND PAVEMENT MARKING SHALL BE REMOVED
2. ALL TRAFFIC STRIPES AND PAVEMENT MARKINGS SHALL BE THERMOPLASTIC UNLESS OTHERWISE NOTED.

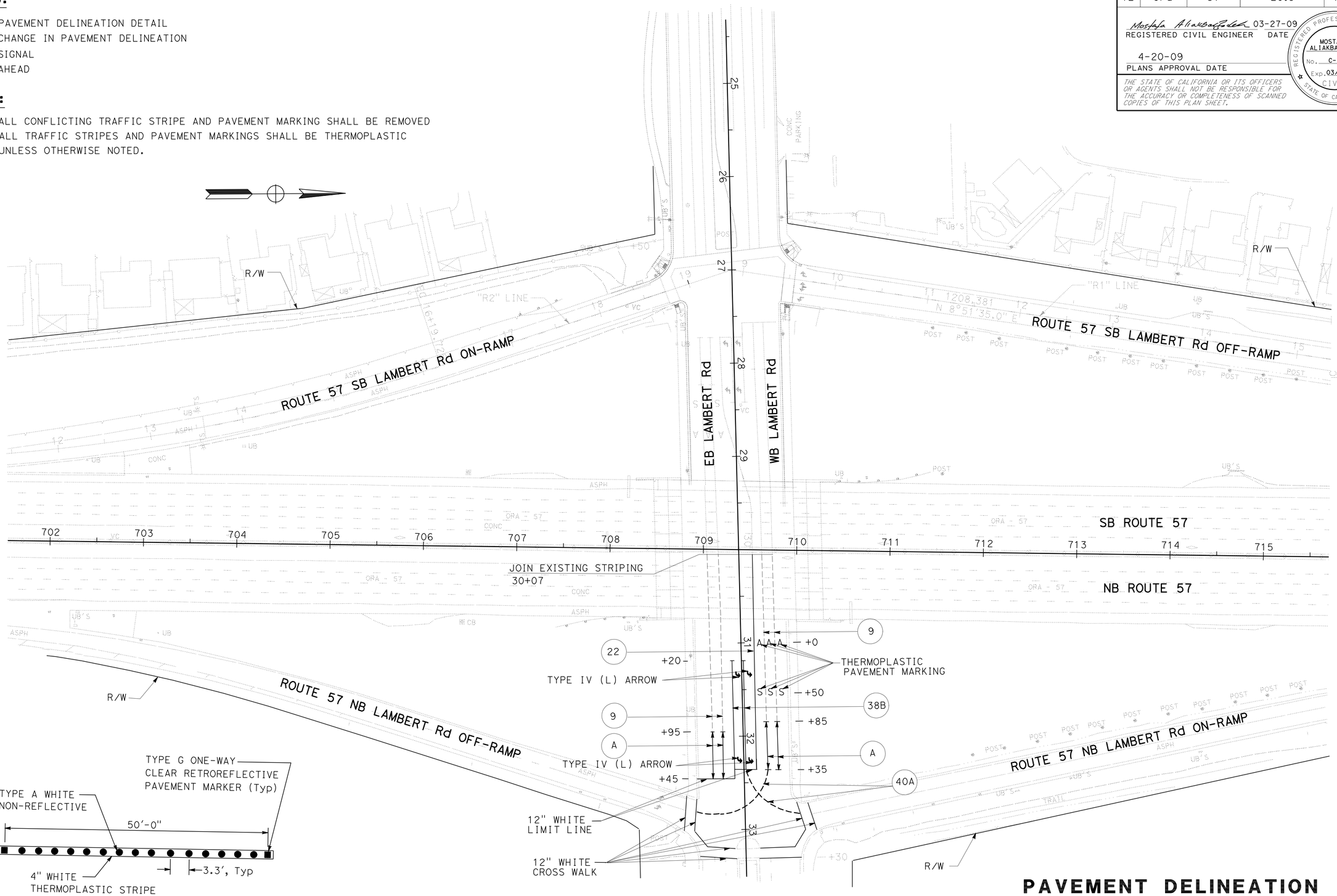

DETAIL A

PAVEMENT DELINEATION

SCALE: 1"=50'

PD-1

THIS PLAN ACCURATE FOR PAVEMENT DELINEATION ONLY

REVISED BY	FK
DATE REVISED	03-27-09
CALCULATED-DESIGNED BY	M ALIAKBARZADEH
CHECKED BY	M ALIAKBARZADEH
FUNCTIONAL SUPERVISOR	ADEL MALEK

STATE OF CALIFORNIA - DEPARTMENT OF TRANSPORTATION
Caltrans
TRAFFIC DESIGN

LAST REVISION 03-27-09 | DATE PLOTTED => 15-JUL-2009 | TIME PLOTTED => 12:55

Dist	COUNTY	ROUTE	POST MILES TOTAL PROJECT	SHEET No.	TOTAL SHEETS
12	Ora	57	20.9	14	19

Mostafa Aliakbarzadeh 03-27-09
REGISTERED CIVIL ENGINEER DATE

4-20-09
PLANS APPROVAL DATE

REGISTERED PROFESSIONAL ENGINEER
MOSTAFA ALIAKBARZADEH
No. C-53003
Exp. 03/31/09
CIVIL
STATE OF CALIFORNIA

THE STATE OF CALIFORNIA OR ITS OFFICERS OR AGENTS SHALL NOT BE RESPONSIBLE FOR THE ACCURACY OR COMPLETENESS OF SCANNED COPIES OF THIS PLAN SHEET.

PAVEMENT DELINEATION QUANTITIES

SHEET No.		THERMOPLASTIC TRAFFIC STRIPE					THERMOPLASTIC PAVEMENT MARKING			PAVEMENT MARKER			REMOVE			
		DETAIL A 4" SOLID WHITE	DETAIL 22	DETAIL 9 4" WHITE BROKEN (17-7)	DETAIL 38B 8" SOLID WHITE	DETAIL 40A (N)	SYMBOLS (ARROW)	SYMBOLS (WORD)	12" SOLID WHITE CROSSWALK & LIMIT LINE	NON-REFLECTIVE TYPE A WHITE	RETRO-REFLECTIVE TYPE G	RETRO-REFLECTIVE TYPE D	YELLOW THERMOPLASTIC TRAFFIC STRIPE	THERMOPLASTIC TRAFFIC STRIPE (WHITE)	THERMOPLASTIC PAVEMENT MARKING	PAVEMENT MARKER
		FT	FT	FT	FT	FT	SQFT	SQFT	SQFT	EA	EA	EA	FT	FT	SQFT	EA
PD-1	Rte 57 - LAMBERT Rd	200	228	732	240	130	60	189	456	93	48	22	228	1640	1096	70
	SUB-TOTAL	200	228	732	240	130	60	189	456	93	48	22	228	1640	1096	70
	TOTAL	428		732	240	130	705			93	70		228	1640	1096	70

(N) - NOT A SEPARATE PAY ITEM, FOR INFORMATION ONLY.

STATE OF CALIFORNIA - DEPARTMENT OF TRANSPORTATION
Caltrans
TRAFFIC DESIGN

FUNCTIONAL SUPERVISOR: ADEL MALEK

CALCULATED-DESIGNED BY: M ALIAKBARZADEH
CHECKED BY: M ALIAKBARZADEH

REVISED BY: FK
DATE REVISED: 03-27-09

PAVEMENT DELINEATION QUANTITIES

PDQ-1

LAST REVISION 03-27-09
DATE PLOTTED => 15-JUL-2009
TIME PLOTTED => 12:55

Dist	COUNTY	ROUTE	POST MILES TOTAL PROJECT	SHEET No.	TOTAL SHEETS
12	Ora	57	20.9	15	19

REGISTERED CIVIL ENGINEER DATE 03-27-09

4-20-09
PLANS APPROVAL DATE

REGISTERED PROFESSIONAL ENGINEER FARIBA A. KHOSRAVI No. C054265 EXP. 12/31/09 CIVIL STATE OF CALIFORNIA

THE STATE OF CALIFORNIA OR ITS OFFICERS OR AGENTS SHALL NOT BE RESPONSIBLE FOR THE ACCURACY OR COMPLETENESS OF SCANNED COPIES OF THIS PLAN SHEET.

ROADWAY QUANTITY SUMMARY

SHEET No.	STATION LIMIT	ROADWAY EXCAVATION	SLOPE PAVING (CONCRETE)	(N) 2" POLYSTYRENE	ARCHITECTURAL SURFACE (TEXTURED CONC)
		CY	SQFT	LF	SQFT
L-1	59.90′ Lt "A" LINE 29+26.27 TO 59.842′ Lt "A" LINE 30+78.483				4600
L-1	60.06′ Rt "A" LINE 29+21.32 TO 59.98′ Rt "A" LINE 30+73.45	50	4600	195	
SUBTOTAL		50	4600	195	4600
TOTAL		50	4600	195	4600

(N) NOT A SEPARATE PAY ITEM, FOR INFORMATION ONLY.

SUMMARY OF QUANTITIES

Q-1

STATE OF CALIFORNIA - DEPARTMENT OF TRANSPORTATION
Caltrans® DESIGN

FUNCTIONAL SUPERVISOR: SUSAN YEE

CALCULATED-DESIGNED BY: FARIBA KHOSRAVI
CHECKED BY: FARIBA KHOSRAVI

REVISED BY: FK
DATE REVISED: 03-27-09

LAST REVISION 03-27-09 | DATE PLOTTED => 15-JUL-2009 | TIME PLOTTED => 12:55

DIST	COUNTY	ROUTE	POST MILES TOTAL PROJECT	SHEET NO.	TOTAL SHEETS
12	Ora	57	20.9	16	19

Randell D. Hiatt
REGISTERED CIVIL ENGINEER

June 6, 2008
PLANS APPROVAL DATE

REGISTERED PROFESSIONAL ENGINEER
Randell D. Hiatt
No. C50200
Exp. 6-30-09
CIVIL
STATE OF CALIFORNIA

The State of California or its officers or agents shall not be responsible for the accuracy or completeness of electronic copies of this plan sheet.

To accompany plans dated 4-20-09

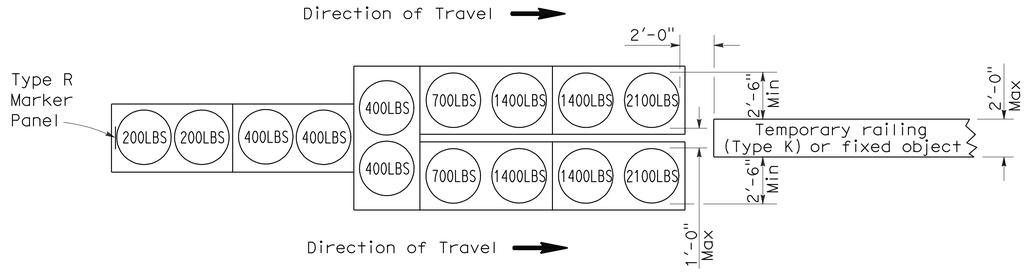

ARRAY 'TU14'

Approach speed 45 mph or more

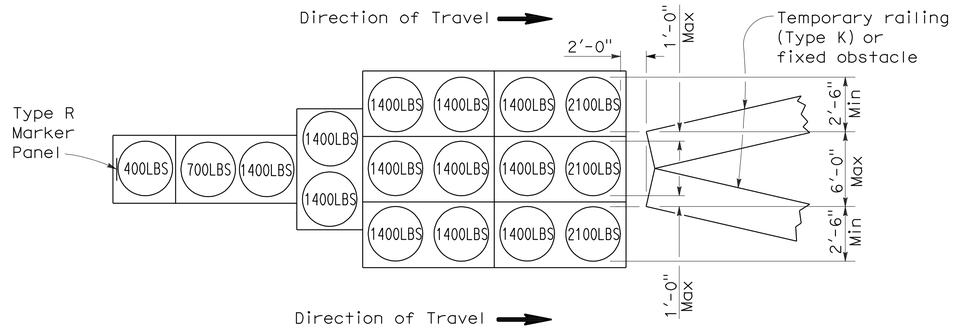

ARRAY 'TU17'

Approach speed less than 45 mph

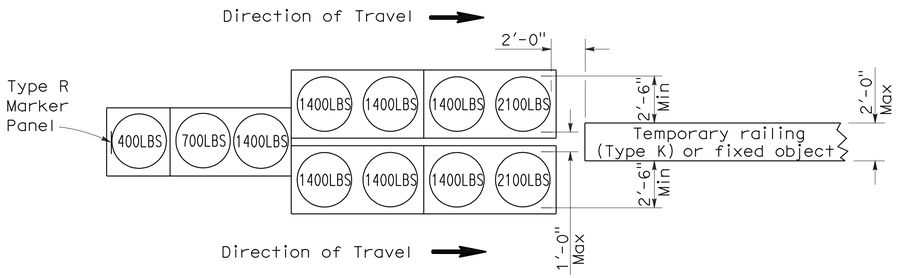

ARRAY 'TU11'

Approach speed less than 45 mph

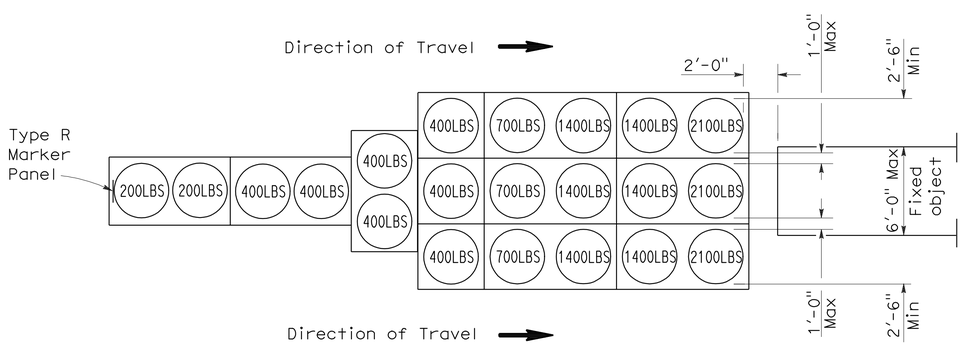

ARRAY 'TU21'

Approach speed 45 mph or more

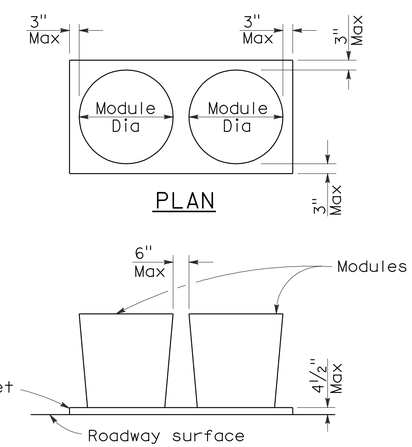

ELEVATION

CRASH CUSHION PALLET DETAIL

See Note 7

NOTES:

1. (XXX) Indicates sand filled module location and weight of sand in pounds for each module. Module spacing is based on the greater diameter of the module.
2. All sand weights are nominal.
3. Temporary crash cushion arrays shall not encroach on the traveled way.
4. Place the top of Type R marker panel 1" below the module lid.
5. Refer to Standard Plan A73B for marker details.
6. Approach speeds indicated conform to NCHRP 350 Report criteria.
7. Use of pallets is optional.

STATE OF CALIFORNIA
DEPARTMENT OF TRANSPORTATION

TEMPORARY CRASH CUSHION, SAND FILLED (UNIDIRECTIONAL)

NO SCALE

RSP T1A DATED JUNE 6, 2008 SUPERSEDES STANDARD PLAN T1A
DATED MAY 1, 2006 - PAGE 211 OF THE STANDARD PLANS BOOK DATED MAY 2006.

REVISED STANDARD PLAN RSP T1A

2006 REVISED STANDARD PLAN RSP T1A

5-15-08

DIST	COUNTY	ROUTE	POST MILES TOTAL PROJECT	SHEET NO.	TOTAL SHEETS
12	Ora	57	20.9	17	19

Randell D. Hiatt
REGISTERED CIVIL ENGINEER

June 6, 2008
PLANS APPROVAL DATE

REGISTERED PROFESSIONAL ENGINEER
Randell D. Hiatt
No. C50200
Exp. 6-30-09
CIVIL
STATE OF CALIFORNIA

The State of California or its officers or agents shall not be responsible for the accuracy or completeness of electronic copies of this plan sheet.

To accompany plans dated 4-20-09

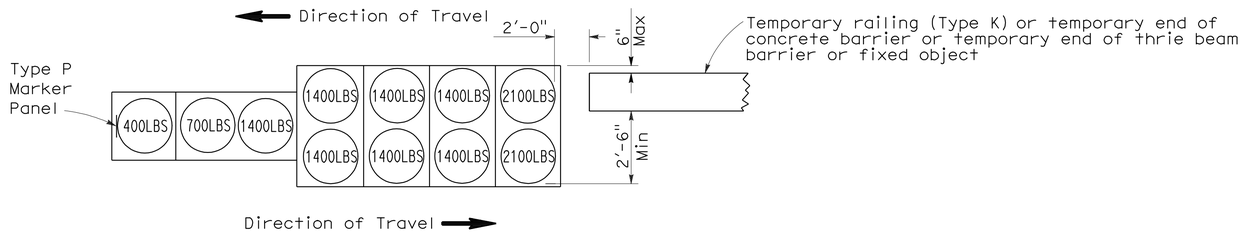

ARRAY 'TB11'

Approach speed less than 45 mph

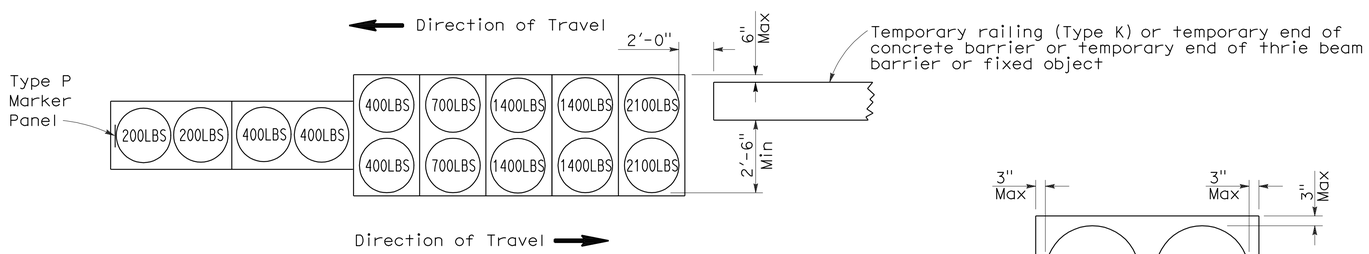

ARRAY 'TB14'

Approach speed 45 mph or more

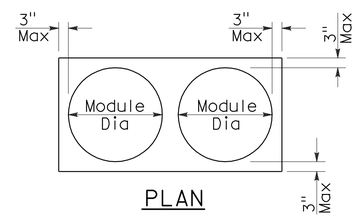

PLAN

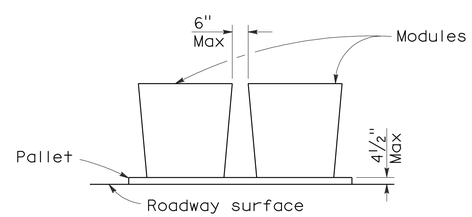

ELEVATION

CRASH CUSHION PALLET DETAIL

See Note 7

NOTES:

1. (XXX) Indicates sand filled module location and weight of sand in pounds for each module. Module spacing is based on the greater diameter of the module.
2. All sand weights are nominal.
3. Temporary crash cushion arrays shall not encroach on the traveled way.
4. Place the Type P marker panel so that the bottom of the panel rests upon the pallet.
5. Refer to Standard Plan A73B for marker details.
6. Approach speeds indicated conform to NCHRP 350 Report criteria.
7. Use of pallets is optional.

STATE OF CALIFORNIA
DEPARTMENT OF TRANSPORTATION

TEMPORARY CRASH CUSHION, SAND FILLED (BIDIRECTIONAL)

NO SCALE

RSP T1B DATED JUNE 6, 2008 SUPERSEDES STANDARD PLAN T1B
DATED MAY 1, 2006 - PAGE 212 OF THE STANDARD PLANS BOOK DATED MAY 2006.

REVISED STANDARD PLAN RSP T1B

2006 REVISED STANDARD PLAN RSP T1B

5-15-08

DIST	COUNTY	ROUTE	POST MILES TOTAL PROJECT	SHEET NO.	TOTAL SHEETS
12	Ora	57	20.9	18	19

Randell D. Hiatt
REGISTERED CIVIL ENGINEER

June 6, 2008
PLANS APPROVAL DATE

REGISTERED PROFESSIONAL ENGINEER
Randell D. Hiatt
No. C50200
Exp. 6-30-09
CIVIL
STATE OF CALIFORNIA

The State of California or its officers or agents shall not be responsible for the accuracy or completeness of electronic copies of this plan sheet.

To accompany plans dated 4-20-09

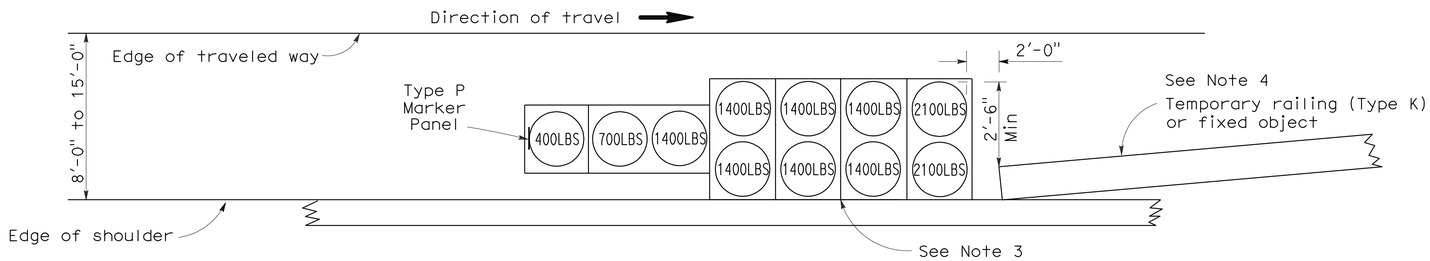

ARRAY 'TS11'

Approach speed less than 45 mph
See Note 9

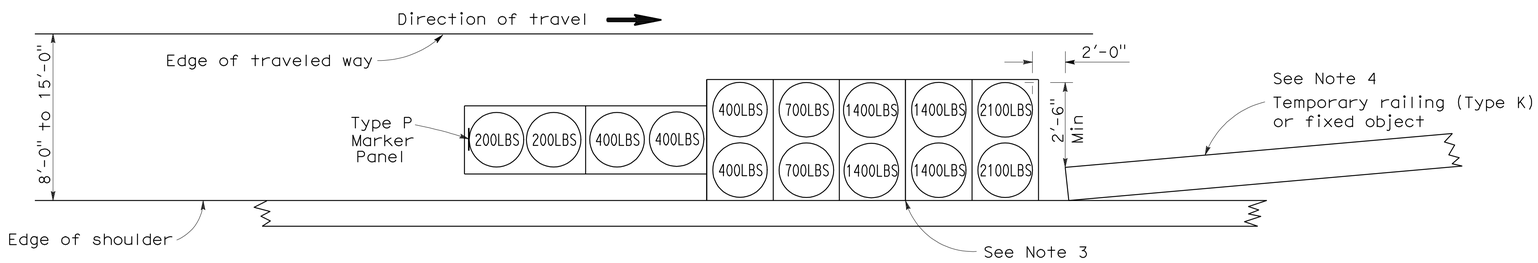

ARRAY 'TS14'

Approach speed 45 mph or more
See Note 9

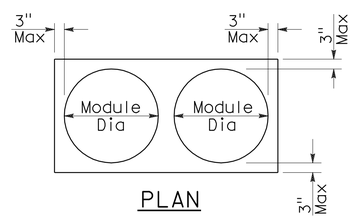

PLAN

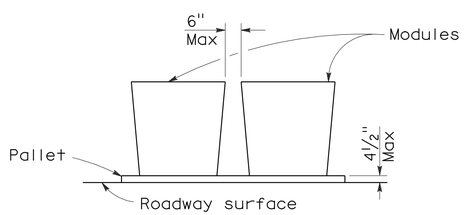

ELEVATION

CRASH CUSHION PALLET DETAIL

See Note 11

NOTES:

1. (XXX) Indicates sand filled module location and weight of sand in pounds for each module. Module spacing is based on the greater diameter of the module.
2. All sand weights are nominal.
3. The temporary crash cushion arrays shown on this plan shall be used only in locations where there will be traffic on one side of the temporary crash cushion array.
4. If the fixed object or approach end of the temporary railing is less than 15'-0" from the edge of traveled way, a temporary crash cushion is required in a construction or work zone.
5. Temporary crash cushion arrays shall not encroach on the traveled way.
6. Arrays for median shoulders shall conform to details shown on this plan for outside shoulders.
7. Place the Type P marker panel so that the bottom of the panel rests upon the pallet and faces traffic.
8. Refer to Standard Plan A73B for marker details.
9. For shoulder widths less than 8'-0", appropriate approved crash cushion protection, other than sand filled modules, shall be provided at fixed objects and at approach ends of temporary railing. The specific type of crash cushion shall be as shown on the project plans or as specified in the Special Provisions, or if not shown on the project plans or specified in the Special Provisions, shall be as approved by the Engineer.
10. Approach speeds indicated conform to NCHRP 350 Report criteria.
11. Use of pallets is optional.

STATE OF CALIFORNIA
DEPARTMENT OF TRANSPORTATION

TEMPORARY CRASH CUSHION, SAND FILLED (SHOULDER INSTALLATIONS)

NO SCALE

RSP T2 DATED JUNE 6, 2008 SUPERSEDES STANDARD PLAN T2
DATED MAY 1, 2006 - PAGE 213 OF THE STANDARD PLANS BOOK DATED MAY 2006.

REVISED STANDARD PLAN RSP T2

2006 REVISED STANDARD PLAN RSP T2

5-15-08

DIST	COUNTY	ROUTE	POST MILES TOTAL PROJECT	SHEET NO.	TOTAL SHEETS
12	Ora	57	20.9	19	19

Robert B Schott
LICENSED LANDSCAPE ARCHITECT

August 15, 2008
PLANS APPROVAL DATE

LICENSED LANDSCAPE ARCHITECT Robert B. Schott 3625 Signature 11-04-08 Renewal Date 08-11-08 Date STATE OF CALIFORNIA

The State of California or its officers or agents shall not be responsible for the accuracy or completeness of electronic copies of this plan sheet.

To accompany plans dated 4-20-09

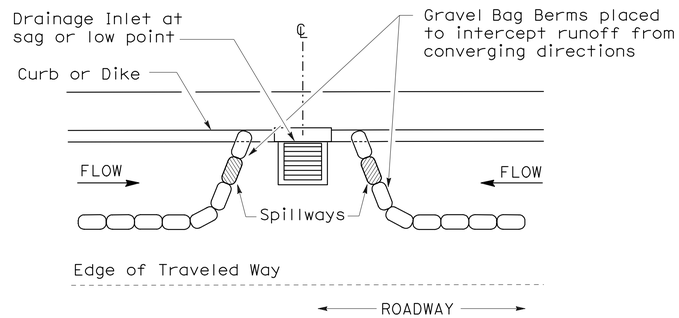

PLAN

CONFIGURATION FOR SAG POINT INLET (GRAVEL BAG BERM)

GRAVEL BAG BERM (TYPE 3A) SPACING TABLE

SLOPE OF ROADWAY (PERCENT)	1 to 3.9	4 to 5.9	6 to 7.9	8 to 10	10+
INTERVAL BETWEEN BERM	100′	75′	50′	25′	12′

For slope of less than 1%, install barriers only if erosion/sediment is prevalent

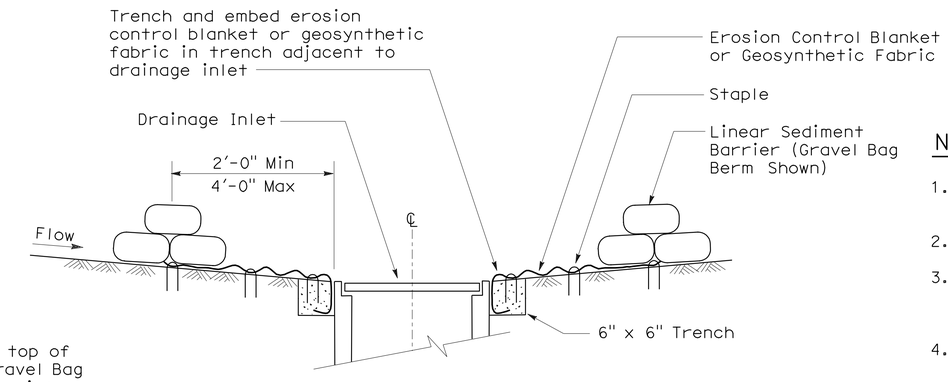

SECTION A-A

NOTES:

1. Place safety cones adjacent to drainage inlet protection.
2. Dimensions may vary to fit field conditions.
3. Install a minimum of 3 gravel bag berms upstream of each drainage inlet to be protected.
4. Position erosion control blanket or geosynthetic fabric at edge of concrete apron and secure in trench.
5. Erosion control blanket or geosynthetic fabric is not required if the area adjacent to the drainage inlet is vegetated or paved.

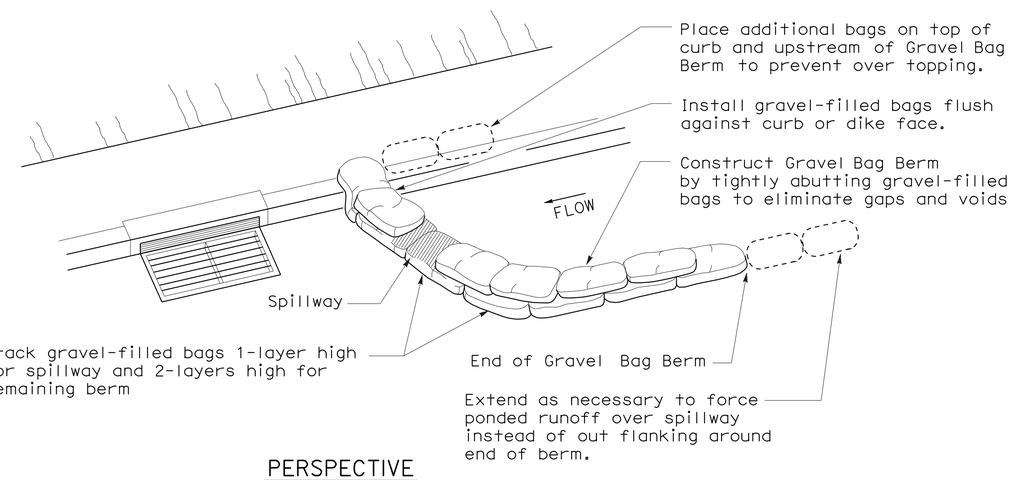

PERSPECTIVE

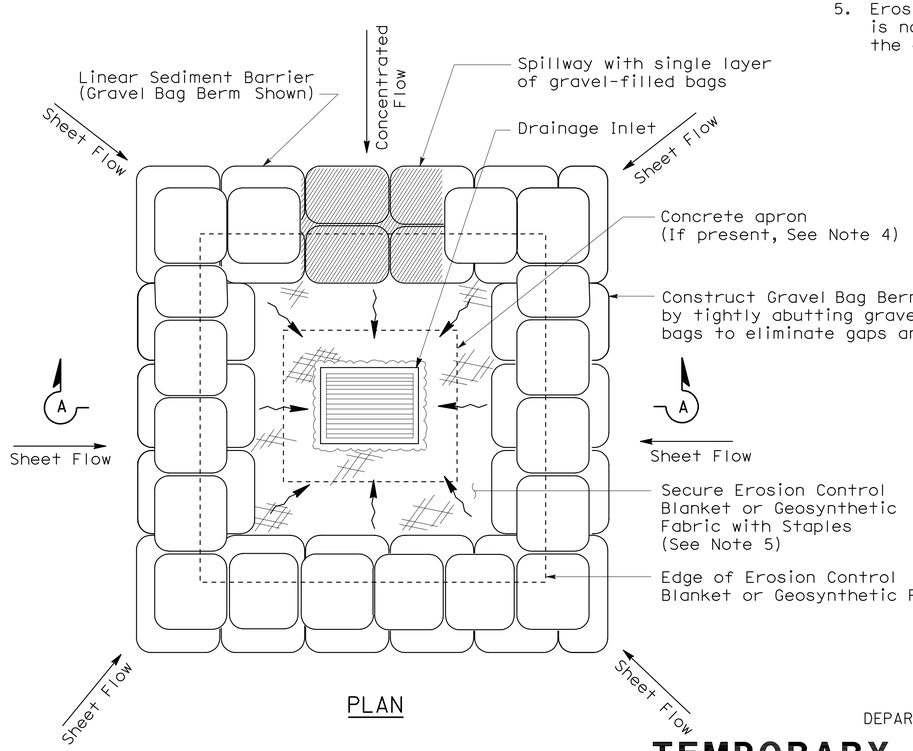

PLAN

TEMPORARY DRAINAGE INLET PROTECTION (TYPE 3B)

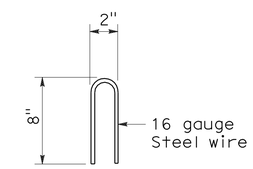

STAPLE DETAIL

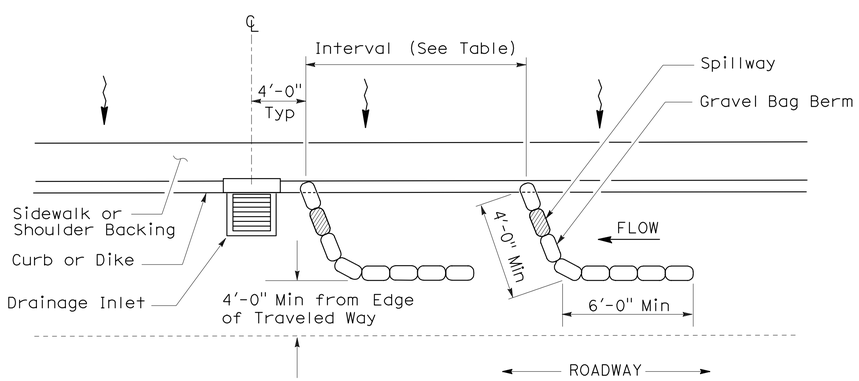

PLAN

TEMPORARY DRAINAGE INLET PROTECTION (TYPE 3A) (GRAVEL BAG BERM)

STATE OF CALIFORNIA
DEPARTMENT OF TRANSPORTATION

TEMPORARY WATER POLLUTION CONTROL DETAILS (TEMPORARY DRAINAGE INLET PROTECTION)

NO SCALE

NSP T62 DATED AUGUST 15, 2008 SUPPLEMENTS THE STANDARD PLANS BOOK DATED MAY 2006.

NEW STANDARD PLAN NSP T62

2006 NEW STANDARD PLAN NSP T62

7-11-08