| Dist | COUNTY | ROUTE | POST MILES TOTAL PROJECT | SHEET No. | TOTAL SHEETS |
|---|---|---|---|---|---|
| 12 | Ora | 5 | 24.9/30.3 | 1 | 67 |

INDEX OF PLANS


| SHEET No. | DESCRIPTION |
|---|---|
| 1 | TITLE AND LOCATION MAP |
| 2 | LAYOUT DETAILS PLAN |
| 3 | CONSTRUCTION DETAILS PLAN |
| 4 | CONTOUR GRADING PLAN |
| 5 | TRAFFIC HANDLING PLANS, DETAILS AND QUANTITIES PLAN |
| 6 | SUMMARY OF QUANTITIES PLAN |
| 7 | PLANTING PLAN |
| 8 | IRRIGATION PLAN AND SPRINKLER SCHEDULE PLAN |
| 9-14 | ELECTRICAL PLANS |
| 42-54 | REVISED AND NEW STANDARD PLANS |
| STRUCTURE PLANS | |
| 55-67 | COMMUNICATION HUB PLANS |


THE STANDARD PLANS LIST APPLICABLE TO THIS CONTRACT IS INCLUDED IN THE NOTICE TO BIDDERS AND SPECIAL PROVISIONS BOOK.

STATE OF CALIFORNIA

# DEPARTMENT OF TRANSPORTATION

# PROJECT PLANS FOR CONSTRUCTION ON

# STATE HIGHWAY

## IN ORANGE COUNTY
## IN IRVINE AND SANTA ANA
## FROM SAND CANYON AVENUE UNDERCROSSING TO ROUTE 5/55 SEPARATION

TO BE SUPPLEMENTED BY STANDARD PLANS DATED MAY 2006

LOCATION MAP

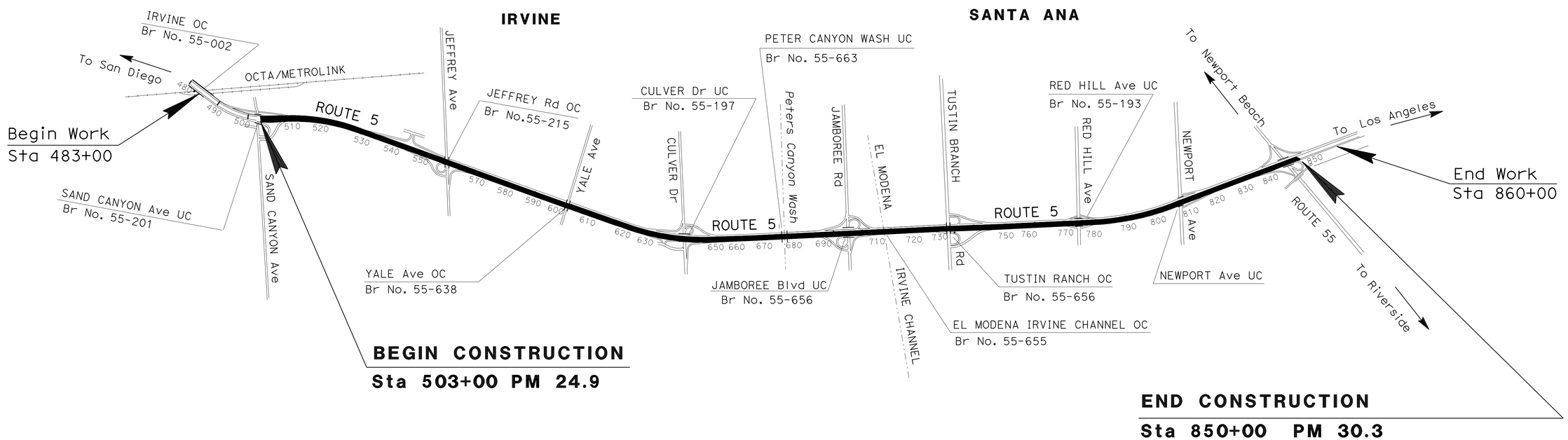


NO SCALE

THE CONTRACTOR SHALL POSSESS THE CLASS (OR CLASSES) OF LICENSE AS SPECIFIED IN THE "NOTICE TO BIDDERS."

PROJECT MANAGER: BERC IKIIZYAN

DESIGN ENGINEER: SEYED H. HASHEMI

S. Hashemi 12-28-09

PROJECT ENGINEER REGISTERED CIVIL ENGINEER — DATE

February 22, 2010

PLANS APPROVAL DATE

REGISTERED PROFESSIONAL ENGINEER — SEYED H. HASHEMI — No. C 71288 — Exp. 12/31/11 — CIVIL — STATE OF CALIFORNIA

*THE STATE OF CALIFORNIA OR ITS OFFICERS OR AGENTS SHALL NOT BE RESPONSIBLE FOR THE ACCURACY OR COMPLETENESS OF SCANNED COPIES OF THIS PLAN SHEET.*

LAST REVISION 12-17-09 — DATE PLOTTED => 01-MAR-2010 — TIME PLOTTED => 12:53

CONTRACT No. 12-0K1504

| Dist | COUNTY | ROUTE | POST MILES TOTAL PROJECT | SHEET No. | TOTAL SHEETS |
|---|---|---|---|---|---|
| 12 | Ora | 5 | 24.9/30.3 | 2 | 67 |

S. Hashemi 12-28-09
REGISTERED CIVIL ENGINEER DATE

2-22-10
PLANS APPROVAL DATE

REGISTERED PROFESSIONAL ENGINEER
SEYED H. HASHEMI
No. C 71288
Exp. 12/31/11
CIVIL
STATE OF CALIFORNIA

*THE STATE OF CALIFORNIA OR ITS OFFICERS OR AGENTS SHALL NOT BE RESPONSIBLE FOR THE ACCURACY OR COMPLETENESS OF SCANNED COPIES OF THIS PLAN SHEET.*

NOTE: FOR ACCURATE RIGHT OF WAY AND ACCESS DATA,
CONTACT RIGHT OF WAY ENGINEERING AT DISTRICT OFFICE.

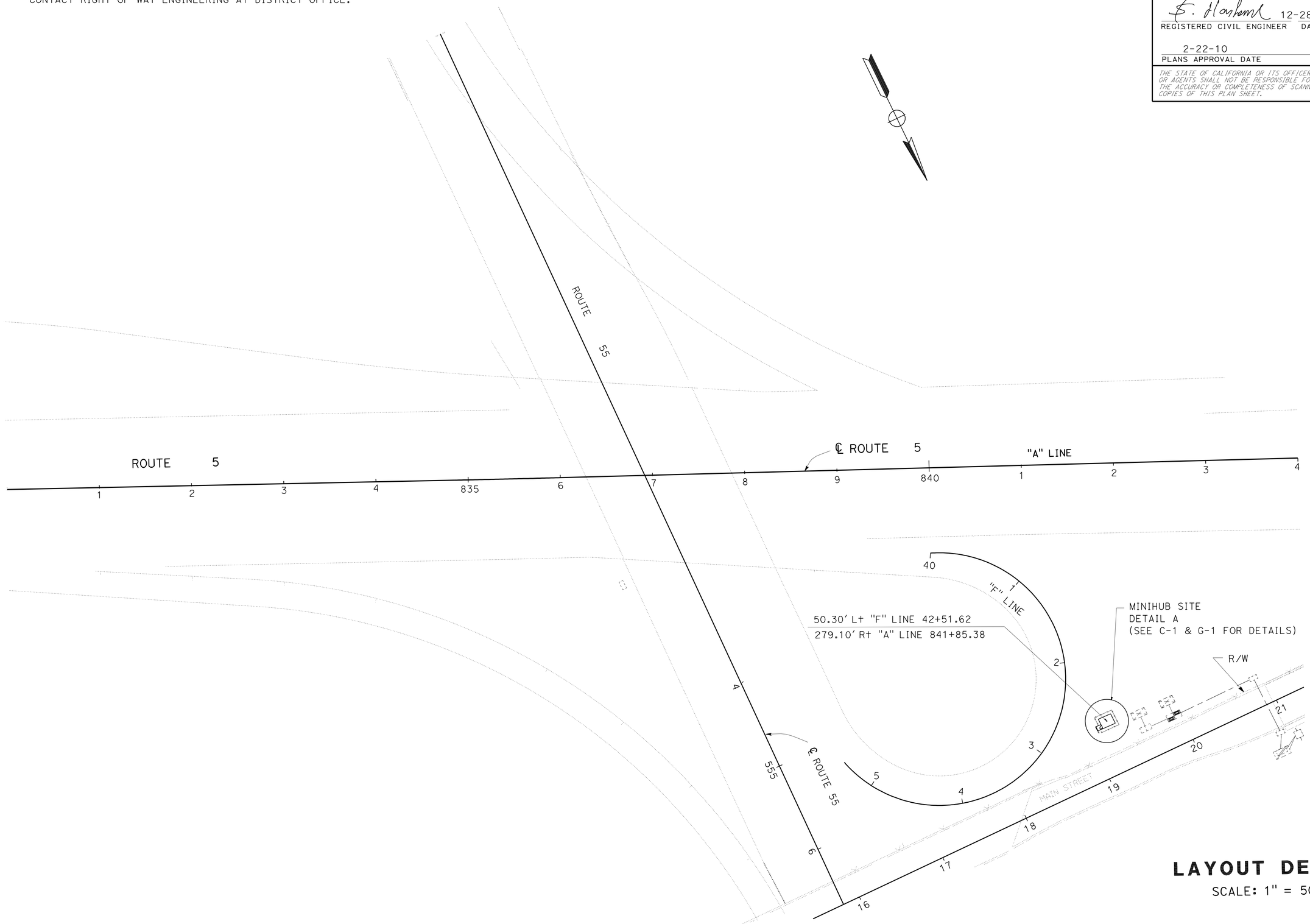


# LAYOUT DETAILS

SCALE: 1" = 50'

**L-1**

| REVISED BY | DATE REVISED |
|---|---|
| | |

CALCULATED-DESIGNED BY: S. HASHEMI
CHECKED BY: R. CARAIG
FUNCTIONAL SUPERVISOR: SON NGUYEN

STATE OF CALIFORNIA - DEPARTMENT OF TRANSPORTATION
Caltrans® DESIGN DEVISION

LAST REVISION 12-17-09
DATE PLOTTED => 01-MAR-2010
TIME PLOTTED => 12:53

| Dist | COUNTY | ROUTE | POST MILES TOTAL PROJECT | SHEET No. | TOTAL SHEETS |
|---|---|---|---|---|---|
| 12 | Ora | 5 | 24.9/30.3 | 3 | 67 |

REGISTERED CIVIL ENGINEER 12-28-09 DATE

2-22-10
PLANS APPROVAL DATE

REGISTERED PROFESSIONAL ENGINEER SEYED H. HASHEMI No. C 71288 Exp. 12/31/11 CIVIL STATE OF CALIFORNIA

*THE STATE OF CALIFORNIA OR ITS OFFICERS OR AGENTS SHALL NOT BE RESPONSIBLE FOR THE ACCURACY OR COMPLETENESS OF SCANNED COPIES OF THIS PLAN SHEET.*

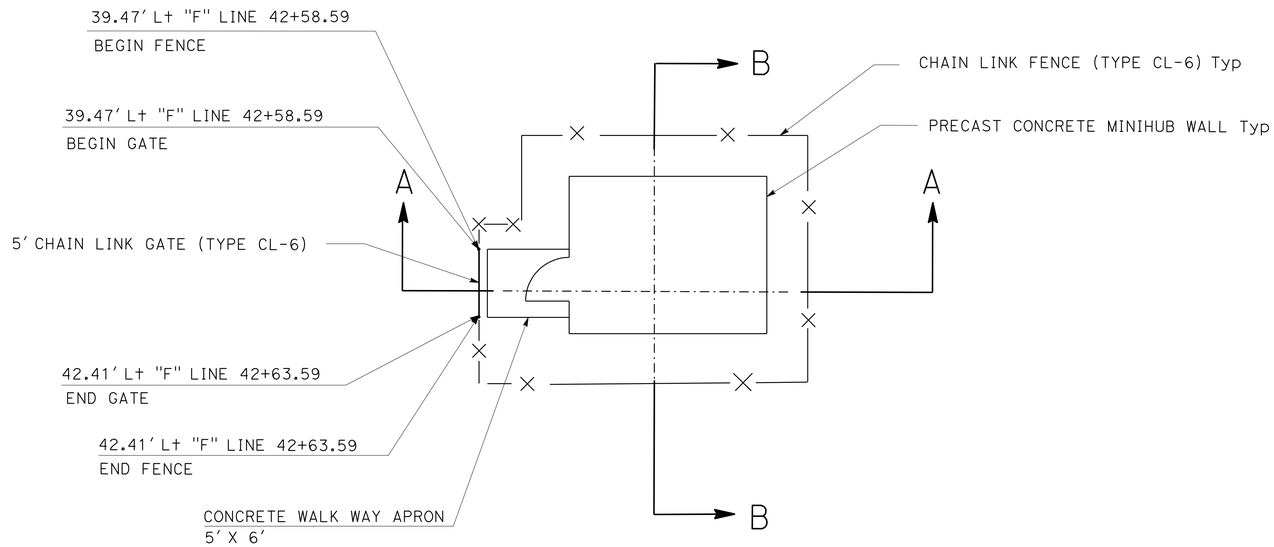


PRECAST MINIHUB
DETAIL A

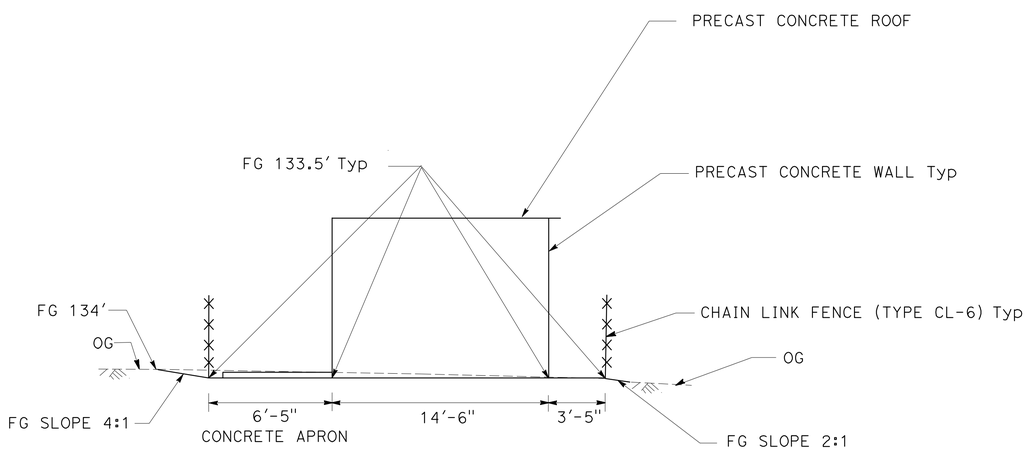


MINIHUB SECTION A-A

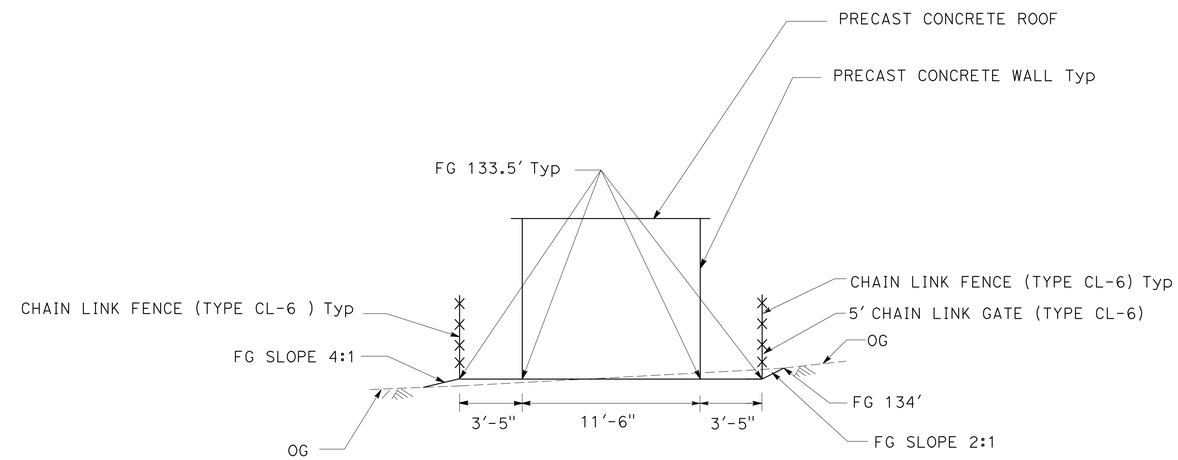


MINIHUB SECTION B-B

# CONSTRUCTION DETAILS

NO SCALE

C-1

STATE OF CALIFORNIA - DEPARTMENT OF TRANSPORTATION
Caltrans® DESIGN DIVISION

FUNCTIONAL SUPERVISOR: SON NGUYEN
CALCULATED-DESIGNED BY: S. HASHEMI
CHECKED BY: R. CARAIG
REVISED BY
DATE REVISED

LAST REVISION 12-17-09
DATE PLOTTED => 01-MAR-2010
TIME PLOTTED => 12:53

NOTE: FOR ACCURATE RIGHT OF WAY AND ACCESS DATA,
CONTACT RIGHT OF WAY ENGINEERING AT DISTRICT OFFICE.

| Dist | COUNTY | ROUTE | POST MILES TOTAL PROJECT | SHEET No. | TOTAL SHEETS |
|---|---|---|---|---|---|
| 12 | Ora | 5 | 24.9/30.3 | 4 | 67 |

S. Hashemi 12-28-09
REGISTERED CIVIL ENGINEER DATE

2-22-10
PLANS APPROVAL DATE

REGISTERED PROFESSIONAL ENGINEER
SEYED H. HASHEMI
No. C 71288
Exp. 12/31/11
CIVIL
STATE OF CALIFORNIA

*THE STATE OF CALIFORNIA OR ITS OFFICERS OR AGENTS SHALL NOT BE RESPONSIBLE FOR THE ACCURACY OR COMPLETENESS OF SCANNED COPIES OF THIS PLAN SHEET.*

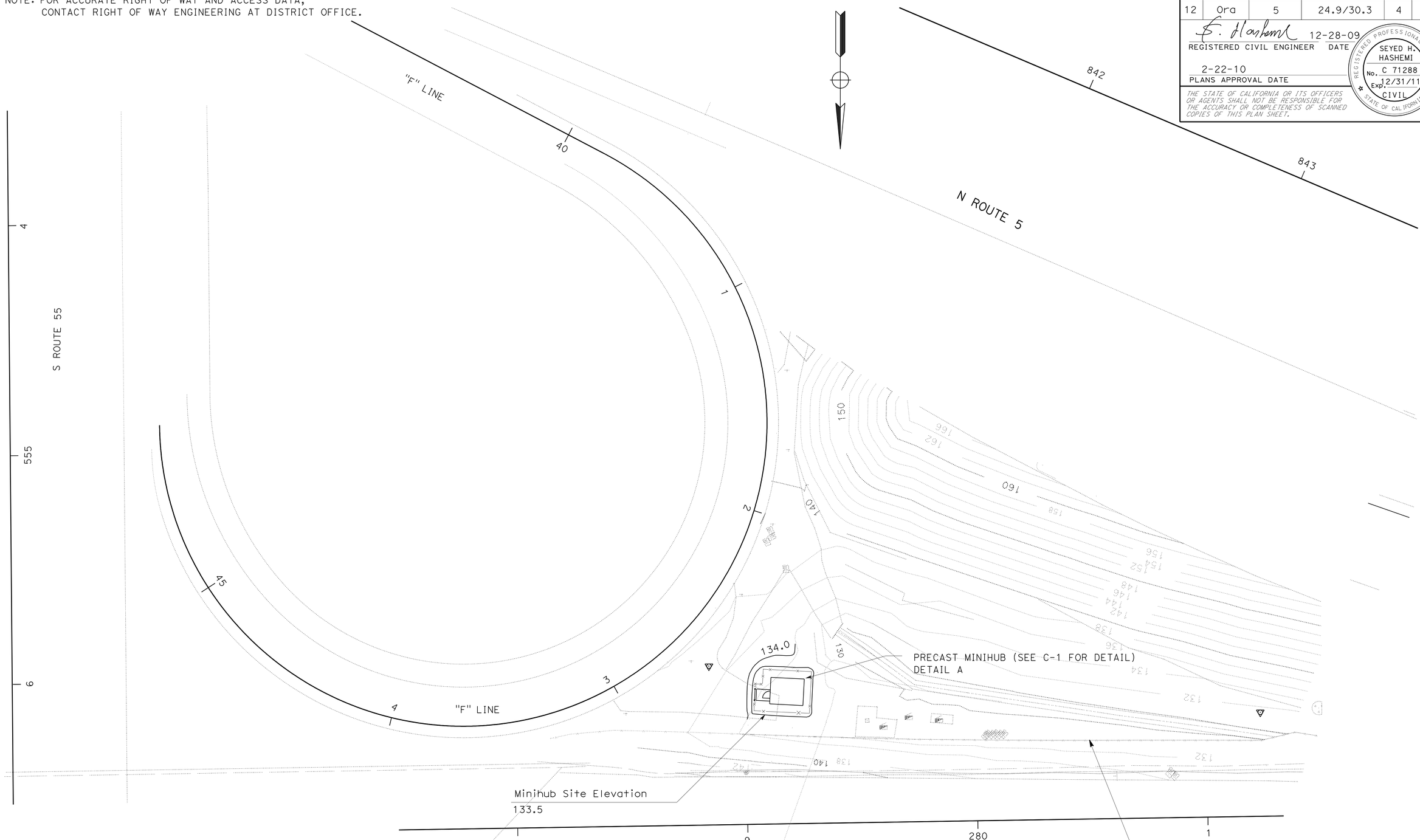


# CONTOUR GRADING

SCALE: 1" = 20'

**G-1**

STATE OF CALIFORNIA - DEPARTMENT OF TRANSPORTATION
Caltrans
DESIGN DIVISION

FUNCTIONAL SUPERVISOR: SON NGUYEN
CALCULATED-DESIGNED BY: S. HASHEMI
CHECKED BY: R. CARAIG
REVISED BY
DATE REVISED

LAST REVISION 12-17-09
DATE PLOTTED => 01-MAR-2010
TIME PLOTTED => 12:53

| Dist | COUNTY | ROUTE | POST MILES TOTAL PROJECT | SHEET No. | TOTAL SHEETS |
|---|---|---|---|---|---|
| 12 | Ora | 5 | 24.9/30.3 | 5 | 67 |

REGISTERED CIVIL ENGINEER 12-28-09 DATE

2-22-10
PLANS APPROVAL DATE

REGISTERED PROFESSIONAL ENGINEER SEYED H. HASHEMI No. C 71288 Exp. 12/31/11 CIVIL STATE OF CALIFORNIA

*THE STATE OF CALIFORNIA OR ITS OFFICERS OR AGENTS SHALL NOT BE RESPONSIBLE FOR THE ACCURACY OR COMPLETENESS OF SCANNED COPIES OF THIS PLAN SHEET.*

## NOTES:

1. LOCATIONS OF CONSTRUCTION AREA SIGNS (DETOUR) SHOWN ARE APPROXIMATE. EXACT LOCATIONS WILL BE DETERMINED BY THE ENGINEER.
2. CONSTRUCTION AREA SIGNS (DETOUR) SHALL BE LOCATED APPROXIMATELY 50 FEETS AWAY FROM THE INTERSECTION.
3. DURING THE 5/55 CONNECTOR CLOSURE, THE PCMS SHOULD READ :

| SB 55 CLOSED | → | USE NB 5 |
|---|---|---|
| 1st FRAME | | 2nd FRAME |

## LEGEND:

- DIRECTION OF TRAFFIC
- CLOSURE
- TYPE III BARRICADE
- (X) CONSTRUCT AREA SIGN
- PCMS PORTABLE CHANGEABLE MESSAGE SIGN

Type III Barricade

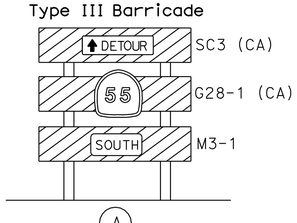


(A) Detour Sign (Mounted on Barricade)

Type III Barricade

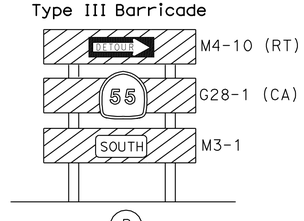


(B) Detour Sign (Mounted on Barricade)

Type III Barricade

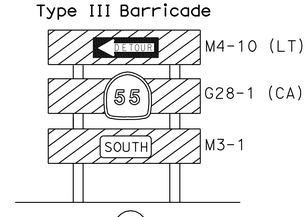


(C) Detour Sign (Mounted on Barricade)

## CONSTRUCTION AREA SIGNS (PORTABLE)

| SIGN | SIGN CODE | PANEL SIZE (in x in) | No. OF SIGN | SIGN MESSAGE |
|---|---|---|---|---|
| (A) | SC3 (CA) | 48"x18" | 1 | DETOUR |
| | G28-1 (CA) | 24"x24" | 1 | ROUTE 5 |
| | M3-1 | 12"x9" | 1 | SOUTH |
| (B) | M4-10 (RT) | 48"x18" | 2 | DETOUR |
| | G28-1 (CA) | 24"x24" | 2 | ROUTE 5 |
| | M3-1 | 12"x9" | 2 | SOUTH |
| (C) | M4-10 (LT) | 48"x18" | 4 | DETOUR |
| | G28-1 (CA) | 24"x24" | 4 | ROUTE 5 |
| | M3-1 | 12"x9" | 4 | SOUTH |
| TOTAL | | | 21 | |

CLOSURE: NB ROUTE 5 TO SB ROUTE 55 CONNECTOR CLOSED

DETOUR: Exit First St/Fourth St (103C)
Keep Left on First St
South on Mabury St
East on First St
South on Route 5
South on Route 55.

# TRAFFIC HANDLING PLAN (DETOUR) (SB SR/55 CONNECTOR CLOSURE)

NO SCALE

THIS PLAN ACCURATE FOR TRAFFIC HANDLING (DETOUR) WORK ONLY

TH-1

STATE OF CALIFORNIA - DEPARTMENT OF TRANSPORTATION
Caltrans DESIGN DEVISION

FUNCTIONAL SUPERVISOR: SON NGUYEN
CALCULATED-DESIGNED BY: S. HASHEMI
CHECKED BY: R. CARAIG
REVISED BY
DATE REVISED

LAST REVISION 12-17-09
DATE PLOTTED => 01-MAR-2010
TIME PLOTTED => 12:54

| Dist | COUNTY | ROUTE | POST MILES TOTAL PROJECT | SHEET No. | TOTAL SHEETS |
|---|---|---|---|---|---|
| 12 | Ora | 5 | 24.9/30.3 | 6 | 67 |

S. Hashemi 12-28-09
REGISTERED CIVIL ENGINEER DATE

2-22-10
PLANS APPROVAL DATE

REGISTERED PROFESSIONAL ENGINEER
SEYED H. HASHEMI
No. C 71288
Exp. 12/31/11
CIVIL
STATE OF CALIFORNIA

*THE STATE OF CALIFORNIA OR ITS OFFICERS OR AGENTS SHALL NOT BE RESPONSIBLE FOR THE ACCURACY OR COMPLETENESS OF SCANNED COPIES OF THIS PLAN SHEET.*

## CHAIN LINK FENCE

| SHEET No. | LOCATION | TYPE | UNIT (LF) |
|---|---|---|---|
| L-1 | "F" Line, Sta 42+00 | CL-6 | 85 |
| TOTAL | | | 85 |

## CHAIN LINK GATE

| SHEET No. | LOCATION | TYPE | EA |
|---|---|---|---|
| L-1 | "F" Line, Sta 42+00 | 5' WIDTH, CL-6 | 1 |
| TOTAL | | | 1 |

## TEMPORARY WATER POLLUTION CONTROL SUMMARY OF QUANTITIES

| SHEET No. | LOCATION | TEMPORARY DRAINAGE INLET PROTECTION (EA) |
|---|---|---|
| L-1 | "F" Line, Sta 42+00 | 1 |
| | TOTAL | 1 |

## TEMPORARY WATER POLLUTION CONTROL (FIBER ROLLS)

| SHEET No. | LOCATION | TEMPORARY FIBER ROLL (LF) |
|---|---|---|
| PP-1 | "F" Line, Sta 42+10 | 300 |
| | TOTAL | 300 |

## GRAVEL

| SHEET No. | LOCATION | UNIT (SQYD) |
|---|---|---|
| PP-1 | "F" Line, Sta 42+50 | 37 |
| | TOTAL | 37 |

# SUMMARY OF QUANTITIES

Q-1

STATE OF CALIFORNIA - DEPARTMENT OF TRANSPORTATION
Caltrans DESIGN DEVISION

FUNCTIONAL SUPERVISOR: SON NGUYEN
CALCULATED-DESIGNED BY: S. HASHEMI
CHECKED BY: R. CARAIG
REVISED BY
DATE REVISED

LAST REVISION 12-17-09
DATE PLOTTED => 01-MAR-2010
TIME PLOTTED => 12:54

NOTE: FOR ACCURATE RIGHT OF WAY AND ACCESS DATA, CONTACT RIGHT OF WAY ENGINEERING AT THE DISTRICT OFFICE.

| Dist | COUNTY | ROUTE | POST MILES TOTAL PROJECT | SHEET No. | TOTAL SHEETS |
|---|---|---|---|---|---|
| 12 | Ora | 5 | 24.9/30.3 | 7 | 67 |

LICENSED LANDSCAPE ARCHITECT

2-22-10
PLANS APPROVAL DATE

LICENSED LANDSCAPE ARCHITECT
STEPHEN SHUN-MIN SU
No. 4838
Signature
9-30-11
Renewal Date
12-28-09
Date
STATE OF CALIFORNIA

*THE STATE OF CALIFORNIA OR ITS OFFICERS OR AGENTS SHALL NOT BE RESPONSIBLE FOR THE ACCURACY OR COMPLETENESS OF SCANNED COPIES OF THIS PLAN SHEET.*

# PLANT LIST AND PLANTING SPECIFICATIONS

## ABBREVIATIONS

AMEND — amendment
B & B — balled and burlapped
Dia — diameter
EA — each
LB — pound
Oz — ounce
Ft — foot/feet
SQFT — square feet
SQYD — square yard
CF — cubic feet
Max — maximum
Min — minimum
NCN — no common name
No. — number
Pkt — packet
PLT ESTB — plant establishment
Pvmt — pavement
R/W — right of way
SF — state furnished
TRVD — traveled

## APPLICABLE WHEN CIRCLED:

1 - Quantities shown are "per plant" unless shown as SQFT or SQYD application rates.
2 - Sufficient to receive root ball.
3 - Does not apply to mulch areas.
4 - As shown on plans.
5 - Unless otherwise shown on plans.
6 - See detail.
7 - See Special Provisions.

## NOTE:

Underlined portions of botanical name indicate abbreviations used on Planting Plans.

| PLANT GROUP | PLANT No. | SYMBOL | BOTANICAL NAME | COMMON NAME | SIZE | QUANTITY EACH | HOLE SIZE (INCH) Dia | HOLE SIZE (INCH) DEPTH | BASIN TYPE | IRON SULFATE | SOIL AMEND 1 | COMMERCIAL FERTILIZER 1 PLANTING | COMMERCIAL FERTILIZER 1 PLT ESTB | BASIN MULCH | STAKING | PLANTING LIMITS MINIMUM DISTANCE (Ft) FROM TRVD WAY | PVMT | FENCE | WALL | PAVED DITCH | EARTH DITCH | ON CENTER (Ft) | REMARKS |
|---|---|---|---|---|---|---|---|---|---|---|---|---|---|---|---|---|---|---|---|---|---|---|---|
| A | 1 | | DIETES BICOLOR | AFRICAN IRIS | No. 1 | 46 | 12 | 12 | II | - | 0.4 CF | 4 Oz | - | 0.4 CF | - | - | 3 | - | - | 4 | - | 3 | 2 ROWS AT TRIANGULAR SPACING |
| H | 2 | | CARPOBROTUS EDULIS | HOTTENTOT FIG | CUTTING | 3000 | - | - | - | - | - | 5 lb/ 100 SQYD | - | - | - | - | 3 | - | - | 6 | - | 1 | |
| U | 3 | | PLATANUS RACEMOSA | CALIFORNIA SYCAMORE | No. 15 | 2 | 24 | 24 | II | - | 2.7 CF | 12 Oz | - | 2.7 CF | 6 | 30 | 10 | - | - | 10 | - | 4 | TREE |
| | 4 | | LAGERSTROMIA INDICA | CRAPE MYRTLE | No. 15 | 5 | 24 | 24 | II | - | 2.7 CF | 12 Oz | - | 2.7 CF | - | 30 | 10 | - | - | 10 | - | 12 | MULTI-TRUNK SHRUB |

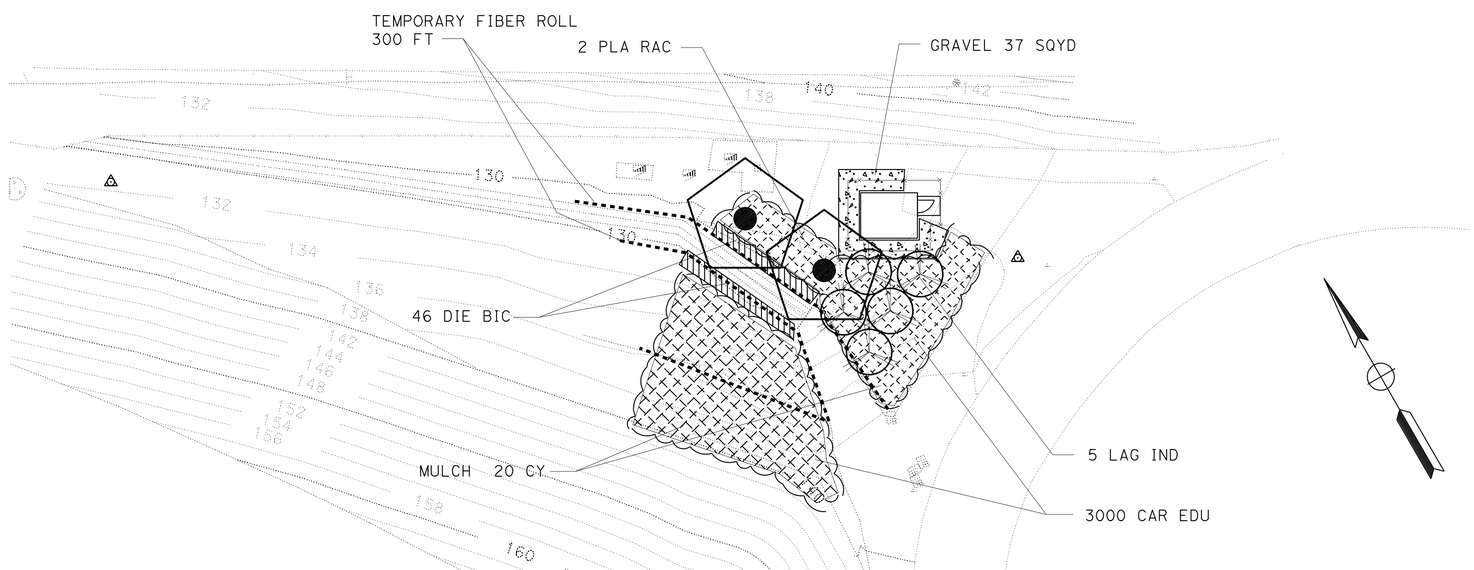


THIS PLAN ACCURATE FOR PLANTING WORK ONLY

LEGEND

GRAVEL 7

MULCH

TEMPORARY FIBER ROLL

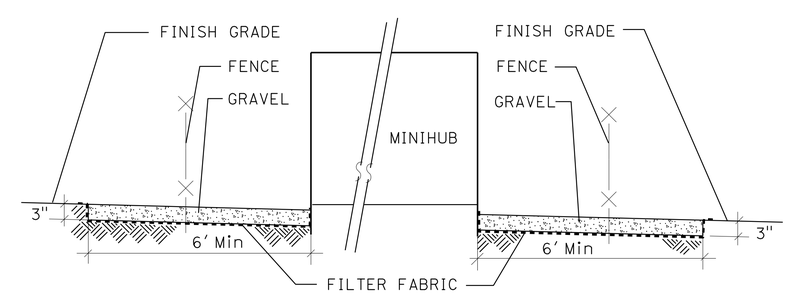


GRAVEL (MISCELLANEOUS AREAS) DETAIL
NO SCALE

# PLANTING PLAN AND PLANT LIST

SCALE: 1" = 20'

**PP-1**

REVISED BY | DATE REVISED
STEPHEN SU
CALCULATED-DESIGNED BY | CHECKED BY
SENIOR LANDSCAPE ARCHITECT
ERIC DICKSON
STATE OF CALIFORNIA - DEPARTMENT OF TRANSPORTATION
Caltrans
LANDSCAPE ARCHITECTURE

LAST REVISION 11-24-09
DATE PLOTTED => 01-MAR-2010
TIME PLOTTED => 12:54

NOTE: FOR ACCURATE RIGHT OF WAY AND ACCESS DATA, CONTACT RIGHT OF WAY ENGINEERING AT THE DISTRICT OFFICE.

| Dist | COUNTY | ROUTE | POST MILES TOTAL PROJECT | SHEET No. | TOTAL SHEETS |
|---|---|---|---|---|---|
| 12 | Ora | 5 | 24.9/30.3 | 8 | 67 |

LICENSED LANDSCAPE ARCHITECT

2-22-10
PLANS APPROVAL DATE

LICENSED LANDSCAPE ARCHITECT STEPHEN SHUN-MIN SU NO. 4838 STATE OF CALIFORNIA
Expiration Date 9-30-11
Renewal Date 12-28-09
Date

*THE STATE OF CALIFORNIA OR ITS OFFICERS OR AGENTS SHALL NOT BE RESPONSIBLE FOR THE ACCURACY OR COMPLETENESS OF SCANNED COPIES OF THIS PLAN SHEET.*

## SPRINKLER SCHEDULE (X IN BOX DENOTES REQUIREMENT)

| SYMBOL | TYPE | DESCRIPTION | SPRAY PATTERN | OPERATING PRESSURE (PSI) | PRESSURE COMPENSATING | PLUS/MINUS 10%② DISCHARGE GALLONS PER MINUTE (GPM) | DISCHARGE GALLONS PER HOUR (GPH) | RADIUS (Ft) | WIDTH x LENGTH (Ft) | MATERIAL | INLET CONNECTION (NPT INCH) | POSITIVE-LOCKING ADJ ARC STOP | BACKSPLASH PREVENTER | DIFFUSER PIN | DISTANCE CONTROL FLAP | ADJ DISCHARGE | RISER TYPE | RISER MATERIAL PLASTIC | RISER MATERIAL GALVANIZED | RISER SIZE (IPS INCH) | RISER HEIGHT (INCH) | RISER FLOW SHUTOFF DEVICE | SWING JOINT (TYPE) | RISER SUPPORT | SPRINKLER PROTECTOR (TYPE) | REMARKS |
|---|---|---|---|---|---|---|---|---|---|---|---|---|---|---|---|---|---|---|---|---|---|---|---|---|---|---|
| ① | A1 | Gear Driven | P | 40 | × | 1.0 | | 36 | | PL | ¾" | | | | | | IV | × | | ¾" | 16" | × | | × | | Shrub Spray |
| 1 | A1 | Gear Driven | F | 40 | × | 2.5 | | 41 | | PL | ¾" | | | | | | IV | × | | ¾" | 16" | × | | × | | Shrub Spray |
| ② | A2 | Gear Driven | P | 40 | × | 1.0 | | 36 | | PL | ¾" | | | | | | - | - | | - | - | - | II | - | I | 12" POP-UP |
| △ | B1 | Spray/Pop-up | H | 30 | | 1.3 | | 12 | | PL | ½" | | | | | | - | - | | - | - | - | II | - | I | 12" POP-UP |
| ▲ | B2 | Spray | H/Q | 30 | | 1.3/ 0.65 | | 12 | | PL | ½" | | | | | | II | × | | ¾" | 6" | | I | × | | 12" RISER |
| ■ | B2 | Spray | F | 30 | | 2.6 | | 12 | | PL | ½" | | | | | | II | × | | ¾" | 6" | | I | × | | 12" RISER |
| ● | C3 | Spray | Q | 30 | | 0.2 | | 5 | | PL | ½" | | | | | | II | × | | ¾" | 6" | | I | | | 6" RISER |

## ABBREVIATIONS

| | | | |
|---|---|---|---|
| F | full circle | Ft | feet/foot |
| P | part circle | GPM | gallons per minute |
| F/P | full/part circle | GPH | gallons per hour |
| Q | quarter circle | Adj | adjustable |
| T | third circle | PL | plastic |
| H | half circle | B/B | brass/bronze |
| TT | two third circle | B/PL | brass/plastic |
| TQ | three quarter circle | B/B/PL | brass/bronze/plastic |
| CST | center strip | NPT | national pipe thread |
| SST | side strip | IPS | iron pipe size |
| EST | end strip | PSI | pounds per square inch |

## APPLICABLE WHEN CIRCLED BELOW:

1 - See Special Provisions.
② - If a pressure compensating device is specified, the discharge and radii shown reflect its use.
3 - Arc Stop shall be fitted with a nut and bolt.
4 - Vinyl-coated cast iron housing.
5 - Swing Joints required adjacent to shoulders, curbs, sidewalks, and dikes.
6 - Unless otherwise shown on plans.

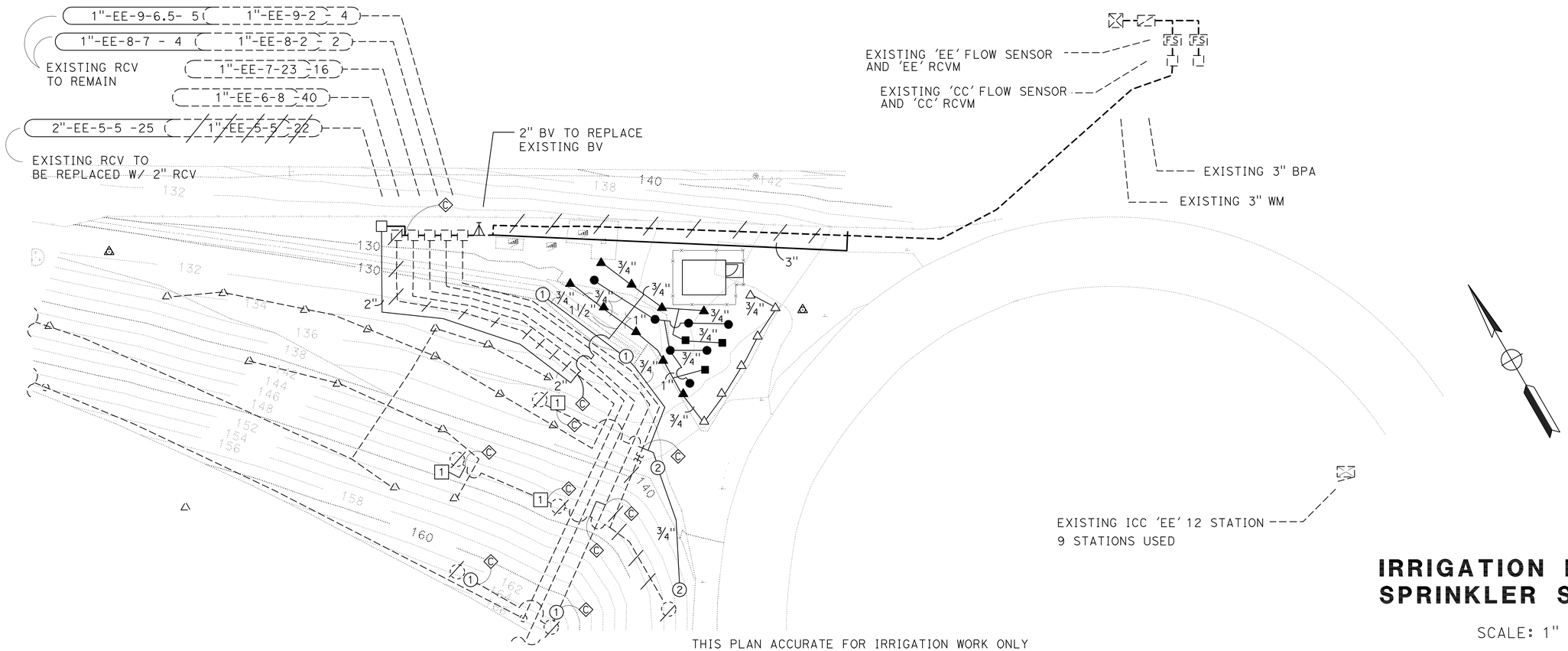


THIS PLAN ACCURATE FOR IRRIGATION WORK ONLY

# IRRIGATION PLAN AND SPRINKLER SCHEDULE

SCALE: 1" = 20'

**IP-1**

STATE OF CALIFORNIA - DEPARTMENT OF TRANSPORTATION
Caltrans® LANDSCAPE ARCHITECTURE

SENIOR LANDSCAPE ARCHITECT: ERIC DICKSON
CALCULATED-DESIGNED BY: STEPHEN SU
CHECKED BY
REVISED BY
DATE REVISED

LAST REVISION 10-13-09
DATE PLOTTED => 01-MAR-2010
TIME PLOTTED => 12:54

| Dist | COUNTY | ROUTE | POST MILES TOTAL PROJECT | SHEET No. | TOTAL SHEETS |
|---|---|---|---|---|---|
| 12 | Ora | 5 | 24.9/30.3 | 9 | 67 |

12-28-09
REGISTERED ELECTRICAL ENGINEER DATE

2-22-10
PLANS APPROVAL DATE

REGISTERED PROFESSIONAL ENGINEER
SHAHRAM SHAHRIARI
No. E13485
Exp. 9/30/10
ELECTRICAL
STATE OF CALIFORNIA

*THE STATE OF CALIFORNIA OR ITS OFFICERS OR AGENTS SHALL NOT BE RESPONSIBLE FOR THE ACCURACY OR COMPLETENESS OF SCANNED COPIES OF THIS PLAN SHEET.*

## ABBREVIATIONS

| | |
|---|---|
| 8P22 | TWISTED PAIR CABLE, 8 PAIR 22 AWG CONDUCTORS |
| 12P22 | TWISTED PAIR CABLE, 12 PAIR 22 AWG CONDUCTORS |
| 25P22 | TWISTED PAIR CABLE, 25 PAIR 22 AWG CONDUCTORS |
| 50P22 | TWISTED PAIR CABLE, 50 PAIR 22 AWG CONDUCTORS |
| 27C18 | 27 CONDUCTOR, 18 AWG CABLE |
| 36C18 | 36 CONDUCTOR, 18 AWG CABLE |
| 2MMFO | FIBER OPTIC CABLE, 2 MULTIMODE FIBERS |
| 12MMFO | FIBER OPTIC CABLE, 12 MULTIMODE FIBERS |
| 4SMFO | FIBER OPTIC CABLE, 4 SINGLEMODE FIBERS |
| 8SMFO | FIBER OPTIC CABLE, 8 SINGLEMODE FIBERS |
| 36SMFO | FIBER OPTIC CABLE, 36 SINGLEMODE FIBERS |
| 72SMFO | FIBER OPTIC CABLE, 72 SINGLEMODE FIBERS |
| CCR | CAMERA CONTROL RECEIVER |
| CN | CABLE NODE |
| DN | DATA NODE |
| FDU | FIBER DISTRIBUTION UNIT |
| F/O OR FO | FIBER OPTIC |
| ID No. | IDENTIFICATION NUMBER |
| MM | MULTIMODE |
| RX | RECEIVER |
| SH | SHORT HAUL |
| SM | SINGLEMODE |
| TM | TRAFFIC MONITORING STATION |
| TMC | TRAFFIC MANAGEMENT CENTER |
| TX | TRANSMITTER |
| WS | WEIGHT STATION |
| COAX | COAXIAL CABLE |
| OTDR | OPITICAL TIME DIVISION REFLECTOMETER |
| SCE | SOUTHERN CALIFORNIA EDISON |

## PROJECT NOTES

1. EXISTING MODEL 334-TV CABINET.
2. EXISTING MODEL 170 CONTROLLER.
3. EXISTING WEIGHT STATION CONTROLLER ASSEMBLY WITH TYPE M CABINET.
4. EXISTING MODEL 334-TV CABINET FOR VIDEO NODE.
5. EXISTING MODEL 334-TV CABINET FOR DATA NODE.
6. EXISTING TYPE III-BF SERVICE CABINET.
7. EXISTING TELEPHONE DEMARCATION CABINET.
8. AT MINI HUB 1; INSTALL FDU; COIL 100′ OF SLACK OF NEW 72 SMFO CABLE. LABEL & TERMINATE WITH SC CONNECTORS.

## LEGEND

[ V ] EXISTING SPLICE VAULT

[ ] EXISTING COMMUNICATION PULL BOX

THIS PLAN IS ACCURATE FOR ELECTRICAL WORK ONLY.

# COMMUNICATION SYSTEM (LEGEND AND NOTES)

NO SCALE

E-1

STATE OF CALIFORNIA - DEPARTMENT OF TRANSPORTATION
Caltrans® ELECTRICAL DESIGN

FUNCTIONAL SUPERVISOR: SHAHRAM SHAHRIARI
CALCULATED-DESIGNED BY: FRANCIS M. ALVIAR
CHECKED BY: VANESSA V. TRUONG
REVISED BY
DATE REVISED

LAST REVISION 12-21-09
DATE PLOTTED => 03-MAR-2010
TIME PLOTTED => 10:56

NOTES: 1. FOR ACCURATE RIGHT OF WAY AND ACCESS DATA, CONTACT RIGHT OF WAY ENGINEERING AT THE DISTRICT OFFICE.

2. EXISTING UTILITY FACILITIES HAVE NOT BEEN PLOTTED ON THESE PLANS.

| Dist | COUNTY | ROUTE | POST MILES TOTAL PROJECT | SHEET No. | TOTAL SHEETS |
|---|---|---|---|---|---|
| 12 | Ora | 5 | 24.9/30.3 | 10 | 67 |

REGISTERED ELECTRICAL ENGINEER 12-28-09 DATE

2-22-10
PLANS APPROVAL DATE

REGISTERED PROFESSIONAL ENGINEER SHAHRAM SHAHRIARI No. E13485 Exp. 9/30/10 ELECTRICAL STATE OF CALIFORNIA

*THE STATE OF CALIFORNIA OR ITS OFFICERS OR AGENTS SHALL NOT BE RESPONSIBLE FOR THE ACCURACY OR COMPLETENESS OF SCANNED COPIES OF THIS PLAN SHEET.*

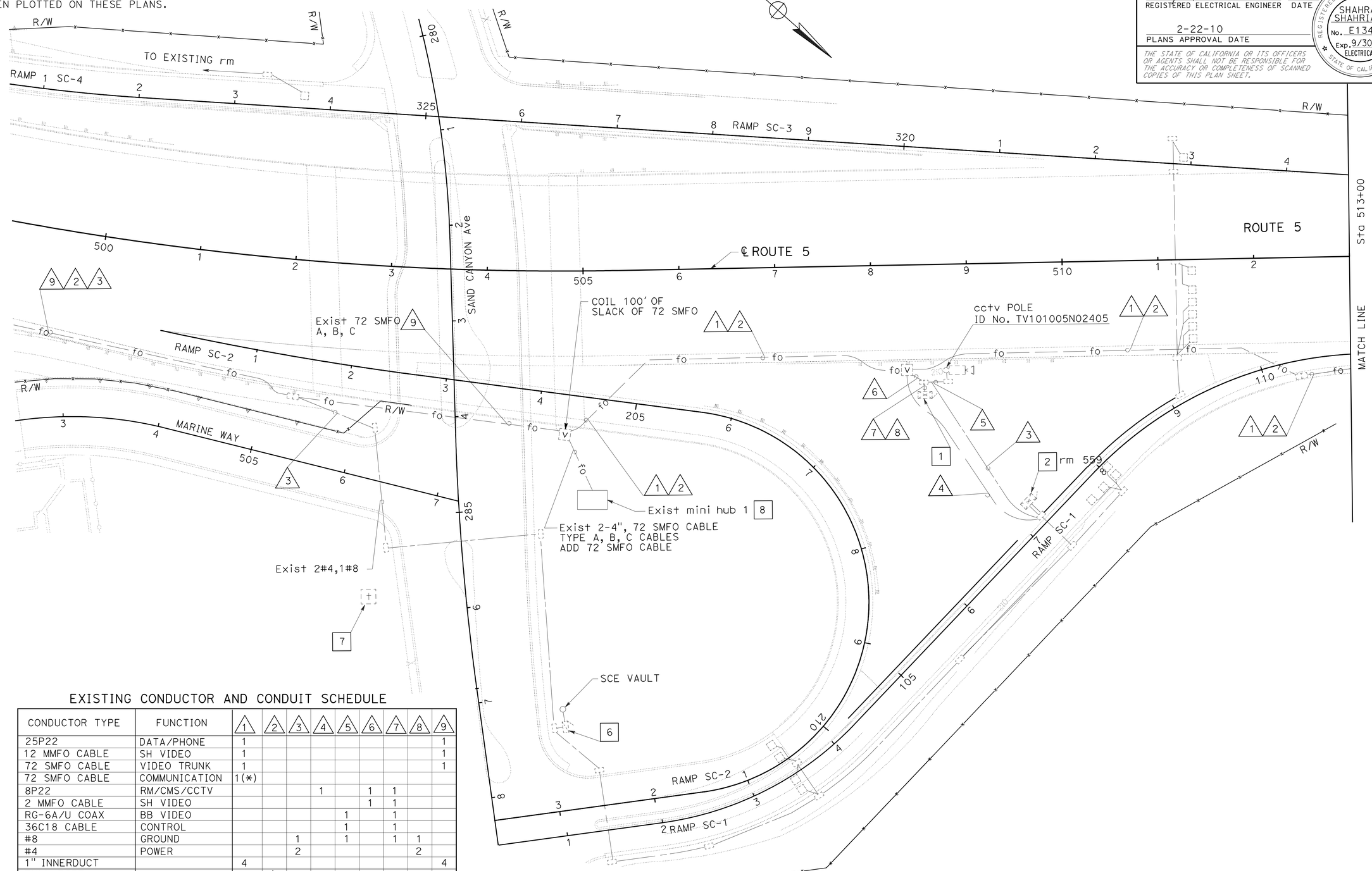


## EXISTING CONDUCTOR AND CONDUIT SCHEDULE

| CONDUCTOR TYPE | FUNCTION | 1 | 2 | 3 | 4 | 5 | 6 | 7 | 8 | 9 |
|---|---|---|---|---|---|---|---|---|---|---|
| 25P22 | DATA/PHONE | 1 | | | | | | | | 1 |
| 12 MMFO CABLE | SH VIDEO | 1 | | | | | | | | 1 |
| 72 SMFO CABLE | VIDEO TRUNK | 1 | | | | | | | | 1 |
| 72 SMFO CABLE | COMMUNICATION | 1(*) | | | | | | | | |
| 8P22 | RM/CMS/CCTV | | | | 1 | | 1 | 1 | | |
| 2 MMFO CABLE | SH VIDEO | | | | | | 1 | 1 | | |
| RG-6A/U COAX | BB VIDEO | | | | | 1 | | 1 | | |
| 36C18 CABLE | CONTROL | | | | | 1 | | 1 | | |
| #8 | GROUND | | | 1 | | 1 | | 1 | 1 | |
| #4 | POWER | | | 2 | | | | | 2 | |
| 1" INNERDUCT | | 4 | | | | | | | | 4 |
| PULL ROPE | | | 1 | | | | | | | |
| CONDUIT SIZE | | 4" | 4" | 2" | 2" | 3" | 3" | 3" | 3" | 4" |

(*) - INSTALL NEW CABLE INTO EXISTING 1" INNERDUCT

THIS PLAN IS ACCURATE FOR ELECTRICAL WORK ONLY.

# COMMUNICATION SYSTEM

SCALE: 1" = 50'

E-2

STATE OF CALIFORNIA - DEPARTMENT OF TRANSPORTATION
Caltrans ELECTRICAL DESIGN

FUNCTIONAL SUPERVISOR: SHAHRAM SHAHRIARI
CALCULATED-DESIGNED BY: FRANCIS M. ALVIAR
CHECKED BY: VANESSA V. TRUONG
REVISED BY / DATE REVISED

LAST REVISION 12-08-09
DATE PLOTTED => 01-MAR-2010
TIME PLOTTED => 12:55

| Dist | COUNTY | ROUTE | POST MILES TOTAL PROJECT | SHEET No. | TOTAL SHEETS |
|---|---|---|---|---|---|
| 12 | Ora | 5 | 24.9/30.3 | 11 | 67 |

REGISTERED ELECTRICAL ENGINEER 12-28-09 DATE

2-22-10
PLANS APPROVAL DATE

REGISTERED PROFESSIONAL ENGINEER SHAHRAM SHAHRIARI No. E13485 Exp. 9/30/10 ELECTRICAL STATE OF CALIFORNIA

*THE STATE OF CALIFORNIA OR ITS OFFICERS OR AGENTS SHALL NOT BE RESPONSIBLE FOR THE ACCURACY OR COMPLETENESS OF SCANNED COPIES OF THIS PLAN SHEET.*

NOTES:

1. FOR ACCURATE RIGHT OF WAY AND ACCESS DATA, CONTACT RIGHT OF WAY ENGINEERING AT THE DISTRICT OFFICE.
2. EXISTING UTILITY FACILITIES HAVE NOT BEEN PLOTTED ON THESE PLANS.

## EXISTING CONDUCTOR AND CONDUIT SCHEDULE

| CONDUCTOR TYPE | FUNCTION | 1 | 2 |
|---|---|---|---|
| 25P22 | DATA/PHONE | 1 | |
| 12 MMFO CABLE | SH VIDEO | 1 | |
| 72 SMFO CABLE | VIDEO TRUNK | 1 | |
| 72 SMFO CABLE | COMMUNICATION | 1(*) | |
| 1" INNERDUCT | | 4 | |
| PULL ROPE | | | 1 |
| CONDUIT SIZE | | 4" | 4" |

(*) - INSTALL NEW CABLE INTO EXISTING 1" INNERDUCT

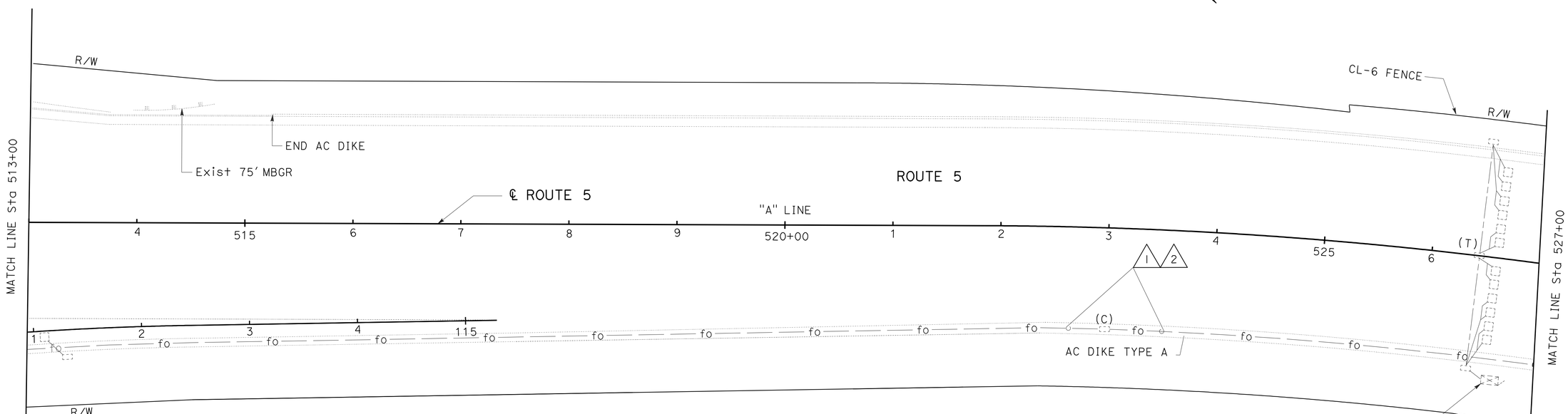


# COMMUNICATION SYSTEM

SCALE: 1" = 50'

**E-3**

THIS PLAN IS ACCURATE FOR ELECTRICAL WORK ONLY.

STATE OF CALIFORNIA - DEPARTMENT OF TRANSPORTATION
Caltrans
ELECTRICAL DESIGN

FUNCTIONAL SUPERVISOR: SHAHRAM SHAHRIARI
CALCULATED-DESIGNED BY: FRANCIS M. ALVIAR
CHECKED BY: VANESSA V. TRUONG
REVISED BY
DATE REVISED

LAST REVISION 11-25-09
DATE PLOTTED => 01-MAR-2010
TIME PLOTTED => 12:55

| Dist | COUNTY | ROUTE | POST MILES TOTAL PROJECT | SHEET No. | TOTAL SHEETS |
|---|---|---|---|---|---|
| 12 | Ora | 5 | 24.9/30.3 | 12 | 67 |

REGISTERED ELECTRICAL ENGINEER 12-28-09 DATE

2-22-10
PLANS APPROVAL DATE

REGISTERED PROFESSIONAL ENGINEER
SHAHRAM SHAHRIARI
No. E13485
Exp. 9/30/10
ELECTRICAL
STATE OF CALIFORNIA

*THE STATE OF CALIFORNIA OR ITS OFFICERS OR AGENTS SHALL NOT BE RESPONSIBLE FOR THE ACCURACY OR COMPLETENESS OF SCANNED COPIES OF THIS PLAN SHEET.*

NOTE:

1. FOR ACCURATE RIGHT OF WAY AND ACCESS DATA, CONTACT RIGHT OF WAY ENGINEERING AT DISTRICT OFFICE.
2. EXISTING UTILITY FACILITIES HAVE NOT BEEN PLOTTED ON THESE PLANS.

EXISTING CONDUCTOR AND CONDUIT SCHEDULE

| CONDUCTOR TYPE | FUNCTION | 1 | 2 |
|---|---|---|---|
| 25P22 | DATA/PHONE | 1 | |
| 12 MMFO CABLE | SH VIDEO | 1 | |
| 72 SMFO CABLE | VIDEO TRUNK | 1 | |
| 72 SMFO CABLE | COMMUNICATION | 1(*) | |
| 1" INNERDUCT | | 4 | |
| PULL ROPE | | | 1 |
| CONDUIT SIZE | | 4" | 4" |

(*) - INSTALL NEW CABLE INTO EXISTING 1" INNERDUCT

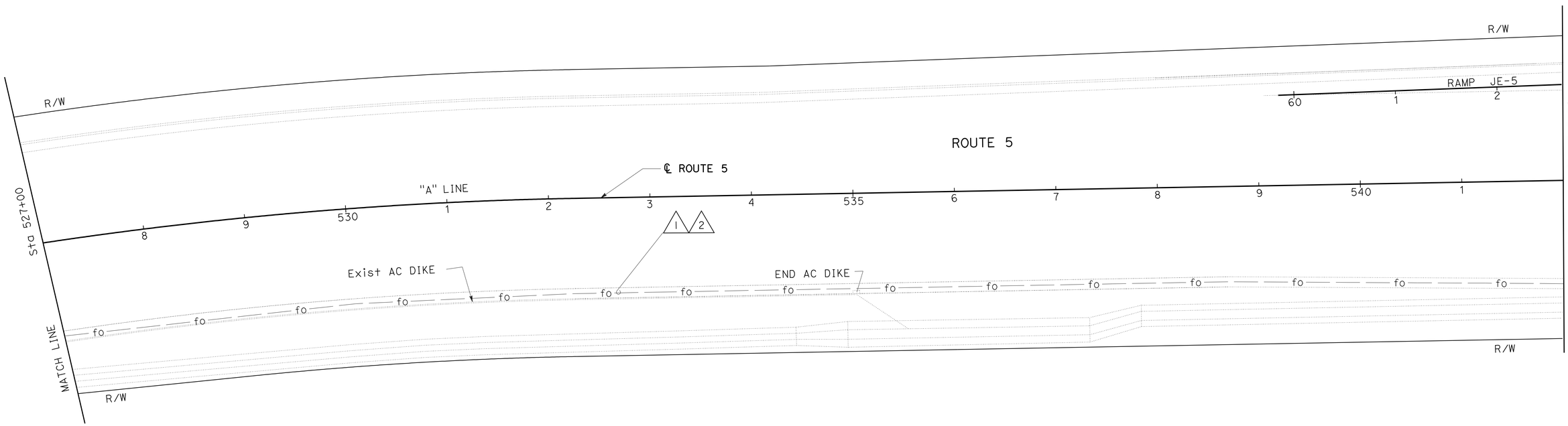


THIS PLAN IS ACCURATE FOR ELECTRICAL WORK ONLY.

# COMMUNICATION SYSTEM

SCALE: 1" = 50'

E-4

STATE OF CALIFORNIA - DEPARTMENT OF TRANSPORTATION
Caltrans
ELECTRICAL DESIGN

FUNCTIONAL SUPERVISOR: SHAHRAM SHAHRIARI
CALCULATED-DESIGNED BY: FRANCIS M. ALVIAR
CHECKED BY: VANESSA V. TRUONG
REVISED BY
DATE REVISED

LAST REVISION 11-25-09
DATE PLOTTED => 01-MAR-2010
TIME PLOTTED => 12:55

| Dist | COUNTY | ROUTE | POST MILES TOTAL PROJECT | SHEET No. | TOTAL SHEETS |
|---|---|---|---|---|---|
| 12 | Ora | 5 | 24.9/30.3 | 13 | 67 |

REGISTERED ELECTRICAL ENGINEER 12-28-09 DATE

2-22-10
PLANS APPROVAL DATE

REGISTERED PROFESSIONAL ENGINEER SHAHRAM SHAHRIARI No. E13485 Exp. 9/30/10 ELECTRICAL STATE OF CALIFORNIA

*THE STATE OF CALIFORNIA OR ITS OFFICERS OR AGENTS SHALL NOT BE RESPONSIBLE FOR THE ACCURACY OR COMPLETENESS OF SCANNED COPIES OF THIS PLAN SHEET.*

NOTE:

1. FOR ACCURATE RIGHT OF WAY AND ACCESS DATA, CONTACT RIGHT OF WAY ENGINEERING AT DISTRICT OFFICE.
2. EXISTING UTILITY FACILITIES HAVE NOT BEEN PLOTTED ON THESE PLANS.

## EXISTING CONDUCTOR AND CONDUIT SCHEDULE

| CONDUCTOR TYPE | FUNCTION | 1 | 2 | 3 | 4 |
|---|---|---|---|---|---|
| 25P22 | DATA/PHONE | 1 | | | |
| 12 MMFO CABLE | SH VIDEO | 1 | | | |
| 72 SMFO CABLE | VIDEO TRUNK | 1 | | | |
| 72 SMFO CABLE | COMMUNICATION | 1(*) | | | |
| 8P22 | RM/CMS/CCTV | | | 1 | 2 |
| 1" INNERDUCT | | 4 | | | |
| PULL ROPE | | | 1 | | |
| CONDUIT SIZE | | 4" | 4" | 2" | 2" |

(*) - INSTALL NEW CABLE INTO EXISTING 1" INNERDUCT

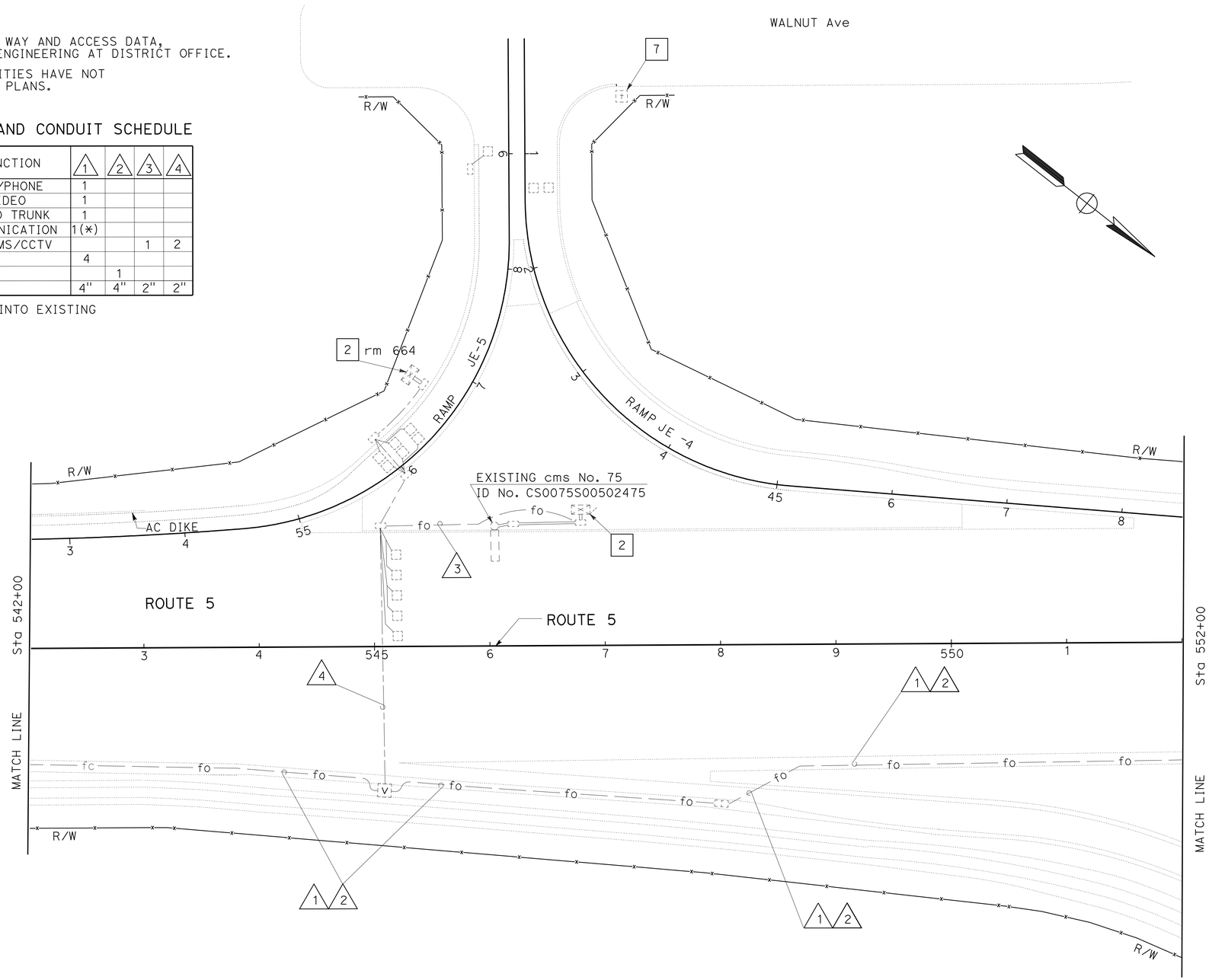


THIS PLAN IS ACCURATE FOR ELECTRICAL WORK ONLY.

# COMMUNICATION SYSTEM

SCALE: 1" = 50'

E-5

STATE OF CALIFORNIA - DEPARTMENT OF TRANSPORTATION
Caltrans ELECTRICAL DESIGN

FUNCTIONAL SUPERVISOR: SHAHRAM SHAHRIARI
CALCULATED-DESIGNED BY: FRANCIS M. ALVIAR
CHECKED BY: VANESSA V. TRUONG
REVISED BY / DATE REVISED

LAST REVISION 11-25-09 DATE PLOTTED => 01-MAR-2010 TIME PLOTTED => 12:55

| Dist | COUNTY | ROUTE | POST MILES TOTAL PROJECT | SHEET No. | TOTAL SHEETS |
|---|---|---|---|---|---|
| 12 | Ora | 5 | 24.9/30.3 | 14 | 67 |

REGISTERED ELECTRICAL ENGINEER 12-28-09 DATE

2-22-10
PLANS APPROVAL DATE

REGISTERED PROFESSIONAL ENGINEER SHAHRAM SHAHRIARI No. E13485 Exp. 9/30/10 ELECTRICAL STATE OF CALIFORNIA

*THE STATE OF CALIFORNIA OR ITS OFFICERS OR AGENTS SHALL NOT BE RESPONSIBLE FOR THE ACCURACY OR COMPLETENESS OF SCANNED COPIES OF THIS PLAN SHEET.*

NOTE:

1. FOR ACCURATE RIGHT OF WAY AND ACCESS DATA, CONTACT RIGHT OF WAY ENGINEERING AT DISTRICT OFFICE.
2. EXISTING UTILITY FACILITIES HAVE NOT BEEN PLOTTED ON THESE PLANS.

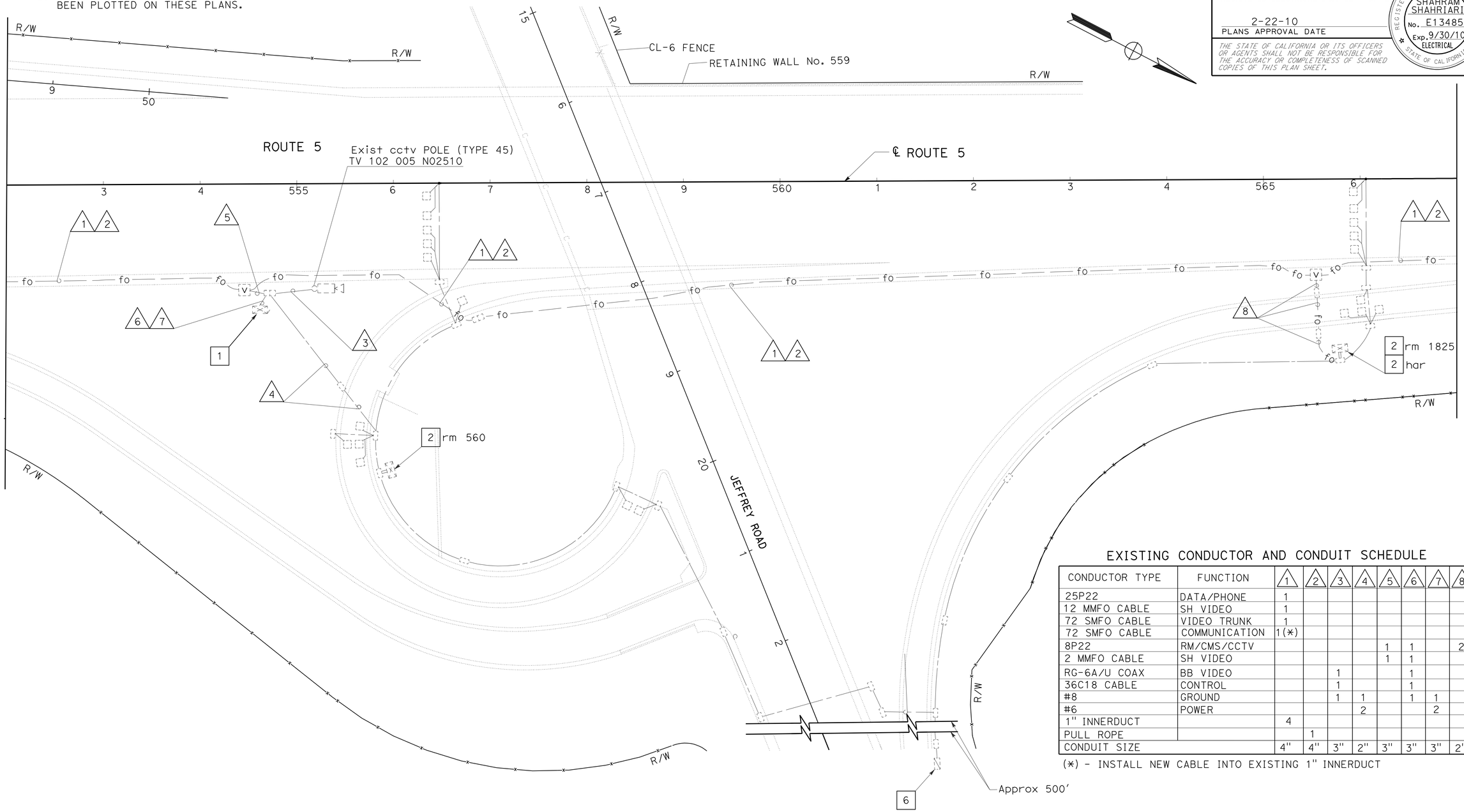


## EXISTING CONDUCTOR AND CONDUIT SCHEDULE

| CONDUCTOR TYPE | FUNCTION | 1 | 2 | 3 | 4 | 5 | 6 | 7 | 8 |
|---|---|---|---|---|---|---|---|---|---|
| 25P22 | DATA/PHONE | 1 | | | | | | | |
| 12 MMFO CABLE | SH VIDEO | 1 | | | | | | | |
| 72 SMFO CABLE | VIDEO TRUNK | 1 | | | | | | | |
| 72 SMFO CABLE | COMMUNICATION | 1(*) | | | | | | | |
| 8P22 | RM/CMS/CCTV | | | | | 1 | 1 | | 2 |
| 2 MMFO CABLE | SH VIDEO | | | | | 1 | 1 | | |
| RG-6A/U COAX | BB VIDEO | | | 1 | | | 1 | | |
| 36C18 CABLE | CONTROL | | | 1 | | | 1 | | |
| #8 | GROUND | | | 1 | 1 | | 1 | 1 | |
| #6 | POWER | | | | 2 | | | 2 | |
| 1" INNERDUCT | | 4 | | | | | | | |
| PULL ROPE | | | 1 | | | | | | |
| CONDUIT SIZE | | 4" | 4" | 3" | 2" | 3" | 3" | 3" | 2" |

(*) - INSTALL NEW CABLE INTO EXISTING 1" INNERDUCT

THIS PLAN IS ACCURATE FOR ELECTRICAL WORK ONLY.

# COMMUNICATION SYSTEM

SCALE: 1" = 50'

E-6

STATE OF CALIFORNIA - DEPARTMENT OF TRANSPORTATION
Caltrans
ELECTRICAL DESIGN

FUNCTIONAL SUPERVISOR: SHAHRAM SHAHRIARI
CALCULATED-DESIGNED BY: FRANCIS M. ALVIAR
CHECKED BY: VANESSA V. TRUONG
REVISED BY
DATE REVISED

LAST REVISION 11-25-09 DATE PLOTTED => 01-MAR-2010 TIME PLOTTED => 12:55

| Dist | COUNTY | ROUTE | POST MILES TOTAL PROJECT | SHEET No. | TOTAL SHEETS |
|---|---|---|---|---|---|
| 12 | Ora | 5 | 24.9/30.3 | 15 | 67 |

REGISTERED ELECTRICAL ENGINEER 12-28-09 DATE

2-22-10
PLANS APPROVAL DATE

REGISTERED PROFESSIONAL ENGINEER
SHAHRAM SHAHRIARI
No. E13485
Exp. 9/30/10
ELECTRICAL
STATE OF CALIFORNIA

*THE STATE OF CALIFORNIA OR ITS OFFICERS OR AGENTS SHALL NOT BE RESPONSIBLE FOR THE ACCURACY OR COMPLETENESS OF SCANNED COPIES OF THIS PLAN SHEET.*

## NOTES:

1. FOR ACCURATE RIGHT OF WAY AND ACCESS DATA, CONTACT RIGHT OF WAY ENGINEERING AT THE DISTRICT OFFICE.
2. EXISTING UTILITY FACILITIES HAVE NOT BEEN PLOTTED ON THESE PLANS.

### EXISTING CONDUCTOR AND CONDUIT SCHEDULE

| CONDUCTOR TYPE | FUNCTION | 1 | 2 |
|---|---|---|---|
| 25P22 | DATA/PHONE | 1 | |
| 12 MMFO CABLE | SH VIDEO | 1 | |
| 72 SMFO CABLE | VIDEO TRUNK | 1 | |
| 72 SMFO CABLE | COMMUNICATION | 1(*) | |
| 1" INNERDUCT | | 4 | |
| PULL ROPE | | | 1 |
| CONDUIT SIZE | | 4" | 4" |

(*) - INSTALL NEW CABLE INTO EXISTING 1" INNERDUCT

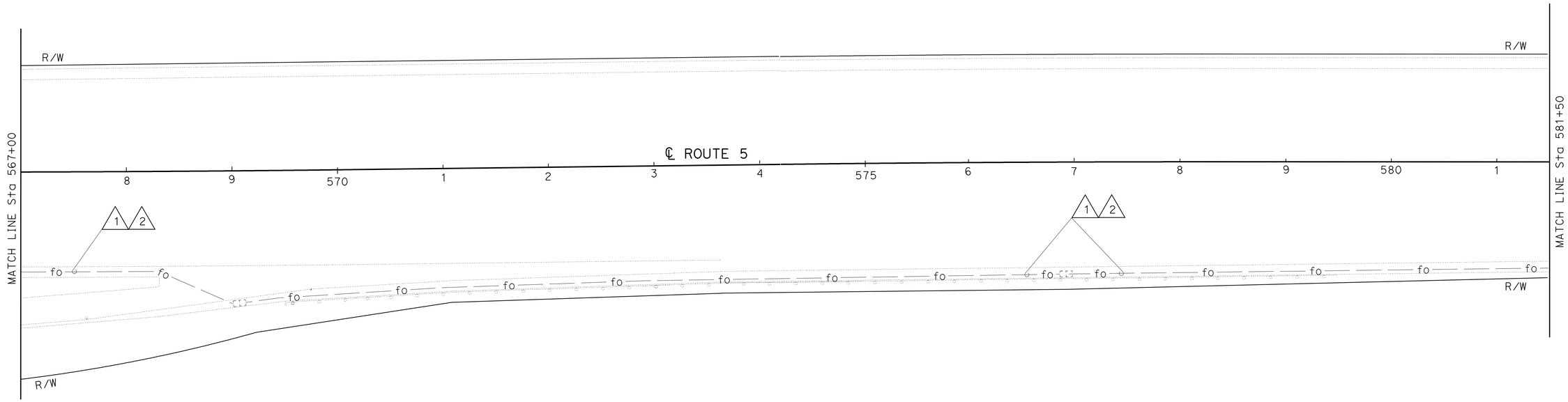


THIS PLAN IS ACCURATE FOR ELECTRICAL WORK ONLY.

## COMMUNICATION SYSTEM

SCALE: 1" = 50'

**E-7**

STATE OF CALIFORNIA - DEPARTMENT OF TRANSPORTATION
Caltrans® **ELECTRICAL DESIGN**

FUNCTIONAL SUPERVISOR: SHAHRAM SHAHRIARI
CALCULATED-DESIGNED BY: FRANCIS M. ALVIAR
CHECKED BY: VANESSA V. TRUONG
REVISED BY
DATE REVISED

LAST REVISION 11-25-09
DATE PLOTTED => 01-MAR-2010
TIME PLOTTED => 12:55

| Dist | COUNTY | ROUTE | POST MILES TOTAL PROJECT | SHEET No. | TOTAL SHEETS |
|---|---|---|---|---|---|
| 12 | Ora | 5 | 24.9/30.3 | 16 | 67 |

REGISTERED ELECTRICAL ENGINEER 12-28-09 DATE

2-22-10
PLANS APPROVAL DATE

REGISTERED PROFESSIONAL ENGINEER
SHAHRAM SHAHRIARI
No. E13485
Exp. 9/30/10
ELECTRICAL
STATE OF CALIFORNIA

*THE STATE OF CALIFORNIA OR ITS OFFICERS OR AGENTS SHALL NOT BE RESPONSIBLE FOR THE ACCURACY OR COMPLETENESS OF SCANNED COPIES OF THIS PLAN SHEET.*

## NOTES:

1. FOR ACCURATE RIGHT OF WAY AND ACCESS DATA, CONTACT RIGHT OF WAY ENGINEERING AT THE DISTRICT OFFICE.
2. EXISTING UTILITY FACILITIES HAVE NOT BEEN PLOTTED ON THESE PLANS.

## EXISTING CONDUCTOR AND CONDUIT SCHEDULE

| CONDUCTOR TYPE | FUNCTION | 1 | 2 |
|---|---|---|---|
| 25P22 | DATA/PHONE | 1 | |
| 12 MMFO CABLE | SH VIDEO | 1 | |
| 72 SMFO CABLE | VIDEO TRUNK | 1 | |
| 72 SMFO CABLE | COMMUNICATION | 1(*) | |
| PULL ROPE | | | 1 |
| 1" INNERDUCT | | 4 | |
| CONDUIT SIZE | | 4" | 4" |

(*) - INSTALL NEW CABLE INTO EXISTING 1" INNERDUCT

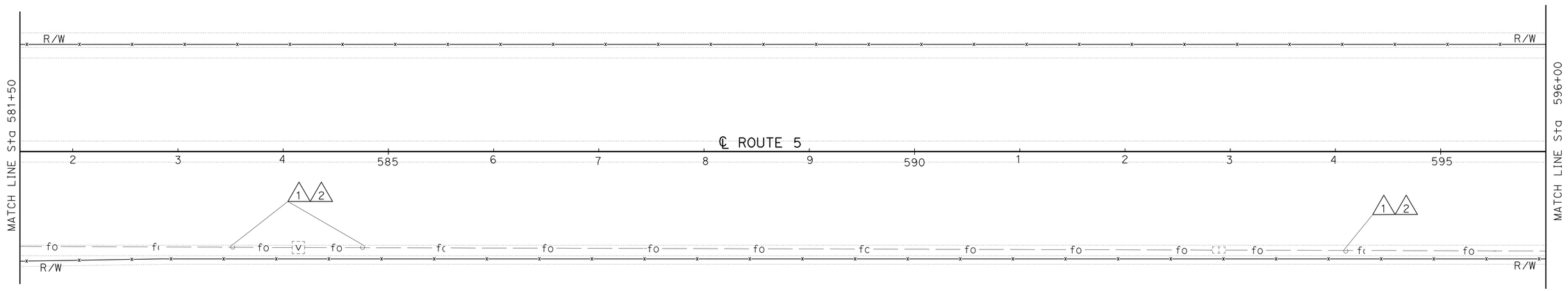


THIS PLAN IS ACCURATE FOR ELECTRICAL WORK ONLY.

# COMMUNICATION SYSTEM

SCALE: 1" = 50'

**E-8**

STATE OF CALIFORNIA - DEPARTMENT OF TRANSPORTATION
Caltrans
**ELECTRICAL DESIGN**

FUNCTIONAL SUPERVISOR: SHAHRAM SHAHRIARI
CALCULATED-DESIGNED BY: FRANCIS M. ALVIAR
CHECKED BY: VANESSA V. TRUONG
REVISED BY
DATE REVISED

LAST REVISION 11-25-09
DATE PLOTTED => 03-MAR-2010
TIME PLOTTED => 11:00

| Dist | COUNTY | ROUTE | POST MILES TOTAL PROJECT | SHEET No. | TOTAL SHEETS |
|---|---|---|---|---|---|
| 12 | Ora | 5 | 24.9/30.3 | 17 | 67 |

REGISTERED ELECTRICAL ENGINEER 12-28-09 DATE

2-22-10
PLANS APPROVAL DATE

REGISTERED PROFESSIONAL ENGINEER SHAHRAM SHAHRIARI No. E13485 Exp. 9/30/10 ELECTRICAL STATE OF CALIFORNIA

*THE STATE OF CALIFORNIA OR ITS OFFICERS OR AGENTS SHALL NOT BE RESPONSIBLE FOR THE ACCURACY OR COMPLETENESS OF SCANNED COPIES OF THIS PLAN SHEET.*

## NOTES:

1. FOR ACCURATE RIGHT OF WAY AND ACCESS DATA, CONTACT RIGHT OF WAY ENGINEERING AT THE DISTRICT OFFICE.
2. EXISTING UTILITY FACILITIES HAVE NOT BEEN PLOTTED ON THESE PLANS.

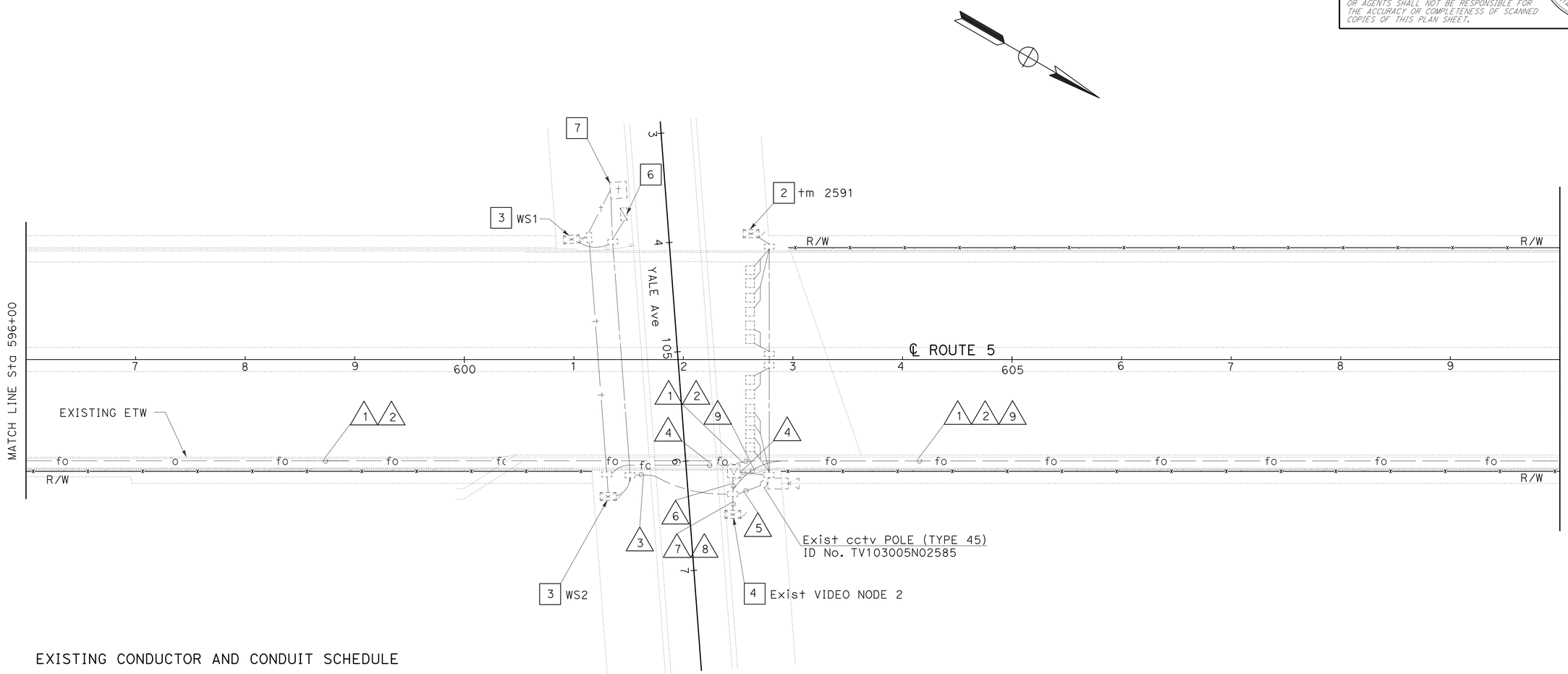


## EXISTING CONDUCTOR AND CONDUIT SCHEDULE

| CONDUCTOR TYPE | FUNCTION | 1 | 2 | 3 | 4 | 5 | 6 | 7 | 8 | 9 |
|---|---|---|---|---|---|---|---|---|---|---|
| 25P22 | DATA/PHONE | 1 | | | | | | | | |
| 12 MMFO CABLE | SH VIDEO | 1 | | | | | 1 | 1 | | |
| 72 SMFO CABLE | VIDEO TRUNK | 1 | | | | | 1 | 1 | | |
| 72 SMFO CABLE | COMMUNICATION | 1(*) | | | | | | | | |
| 8P22 | RM/CMS/CCTV | | | | 1 | | 1 | 1 | | |
| RG-6A/U COAX | BB VIDEO | | | | | 1 | | 1 | | |
| 36C18 CABLE | CONTROL | | | | | 1 | | 1 | | |
| #8 | GROUND | | | 2 | | 1 | | 1 | 1 | 1 |
| #6 | POWER | | | 2 | | | | | 2 | |
| #4 | POWER | | | 2 | | | | | | 2 |
| 1" INNERDUCT | | 4 | | | | | | | | |
| PULL ROPE | | | 1 | | | | | | | |
| CONDUIT SIZE | | 4" | 4" | 2" | 2" | 3" | 3" | 3" | 3" | 2" |

(*) - INSTALL NEW CABLE INTO EXISTING 1" INNERDUCT

THIS PLAN IS ACCURATE FOR ELECTRICAL WORK ONLY.

# COMMUNICATION SYSTEM

SCALE: 1" = 50'

**E-9**

STATE OF CALIFORNIA - DEPARTMENT OF TRANSPORTATION
Caltrans
ELECTRICAL DESIGN

FUNCTIONAL SUPERVISOR: SHAHRAM SHAHRIARI
CALCULATED-DESIGNED BY: FRANCIS M. ALVIAR
CHECKED BY: VANESSA V. TRUONG
REVISED BY
DATE REVISED

LAST REVISION 11-25-09
DATE PLOTTED => 01-MAR-2010
TIME PLOTTED => 12:56

| Dist | COUNTY | ROUTE | POST MILES TOTAL PROJECT | SHEET No. | TOTAL SHEETS |
|---|---|---|---|---|---|
| 12 | Ora | 5 | 24.9/30.3 | 18 | 67 |

REGISTERED ELECTRICAL ENGINEER 12-28-09 DATE

2-22-10
PLANS APPROVAL DATE

REGISTERED PROFESSIONAL ENGINEER SHAHRAM SHAHRIARI No. E13485 Exp. 9/30/10 ELECTRICAL STATE OF CALIFORNIA

*THE STATE OF CALIFORNIA OR ITS OFFICERS OR AGENTS SHALL NOT BE RESPONSIBLE FOR THE ACCURACY OR COMPLETENESS OF SCANNED COPIES OF THIS PLAN SHEET.*

NOTES:

1. FOR ACCURATE RIGHT OF WAY AND ACCESS DATA, CONTACT RIGHT OF WAY ENGINEERING AT THE DISTRICT OFFICE.
2. EXISTING UTILITY FACILITIES HAVE NOT BEEN PLOTTED ON THESE PLANS.

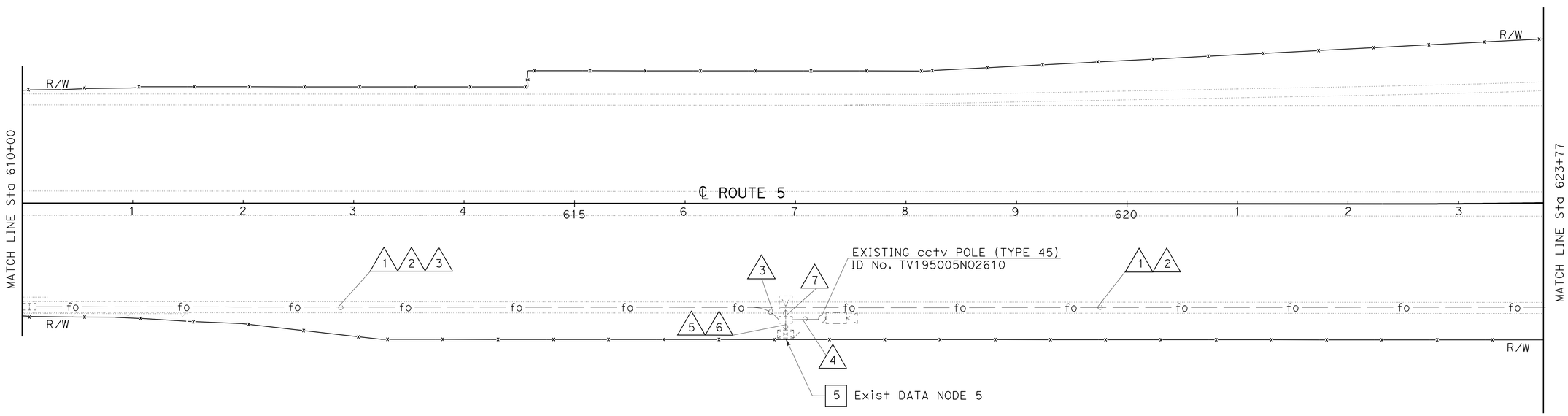


EXISTING CONDUCTOR AND CONDUIT SCHEDULE

| CONDUCTOR TYPE | FUNCTION | 1 | 2 | 3 | 4 | 5 | 6 | 7 |
|---|---|---|---|---|---|---|---|---|
| 25P22 | DATA/PHONE | 1 | | | | 2 | | 2 |
| 12 MMFO CABLE | SH VIDEO | 1 | | | | | | |
| 72 SMFO CABLE | VIDEO TRUNK | 1 | | | | | | |
| 72 SMFO CABLE | COMMUNICATION | 1(*) | | | | | | |
| 2 MMFO CABLE | SH VIDEO | | | | | 1 | | 1 |
| 8 SMFO CABLE | SH VIDEO | | | | | 1 | | 1 |
| RG-6A/U COAX | BB VIDEO | | | | 1 | 1 | | |
| 36C18 CABLE | CONTROL | | | | 1 | 1 | | |
| #8 | GROUND | | | 1 | 1 | 1 | 1 | |
| #4 | POWER | | | 2 | | | 2 | |
| 1" INNERDUCT | | 4 | | | | | | |
| PULL ROPE | | | 1 | | | | | |
| CONDUIT SIZE | | 4" | 4" | 2" | 3" | 3" | 3" | 3" |

(*) - INSTALL NEW CABLE INTO EXISTING 1" INNERDUCT

THIS PLAN IS ACCURATE FOR ELECTRICAL WORK ONLY.

# COMMUNICATION SYSTEM

SCALE: 1" = 50'

**E-10**

STATE OF CALIFORNIA - DEPARTMENT OF TRANSPORTATION
Caltrans® ELECTRICAL DESIGN

FUNCTIONAL SUPERVISOR: SHAHRAM SHAHRIARI
CALCULATED-DESIGNED BY: FRANCIS M. ALVIAR
CHECKED BY: VANESSA V. TRUONG
REVISED BY / DATE REVISED

LAST REVISION 11-25-09
DATE PLOTTED => 01-MAR-2010
TIME PLOTTED => 12:56

| Dist | COUNTY | ROUTE | POST MILES TOTAL PROJECT | SHEET No. | TOTAL SHEETS |
|---|---|---|---|---|---|
| 12 | Ora | 5 | 24.9/30.3 | 19 | 67 |

REGISTERED ELECTRICAL ENGINEER 12-28-09 DATE

2-22-10
PLANS APPROVAL DATE

REGISTERED PROFESSIONAL ENGINEER SHAHRAM SHAHRIARI No. E13485 Exp. 9/30/10 ELECTRICAL STATE OF CALIFORNIA

*THE STATE OF CALIFORNIA OR ITS OFFICERS OR AGENTS SHALL NOT BE RESPONSIBLE FOR THE ACCURACY OR COMPLETENESS OF SCANNED COPIES OF THIS PLAN SHEET.*

## NOTES:

1. FOR ACCURATE RIGHT OF WAY AND ACCESS DATA, CONTACT RIGHT OF WAY ENGINEERING AT THE DISTRICT OFFICE.
2. EXISTING UTILITY FACILITIES HAVE NOT BEEN PLOTTED ON THESE PLANS.

## EXISTING CONDUCTOR AND CONDUIT SCHEDULE

| CONDUCTOR TYPE | FUNCTION | 1 | 2 |
|---|---|---|---|
| 25P22 | DATA/PHONE | 1 | |
| 12 MMFO CABLE | SH VIDEO | 1 | |
| 72 SMFO CABLE | VIDEO TRUNK | 1 | |
| 72 SMFO CABLE | COMMUNICATION | 1(*) | |
| 1" INNERDUCT | | 4 | |
| PULL ROPE | | | 1 |
| CONDUIT SIZE | | 4" | 4" |

(*) - INSTALL NEW CABLE INTO EXISTING 1" INNERDUCT

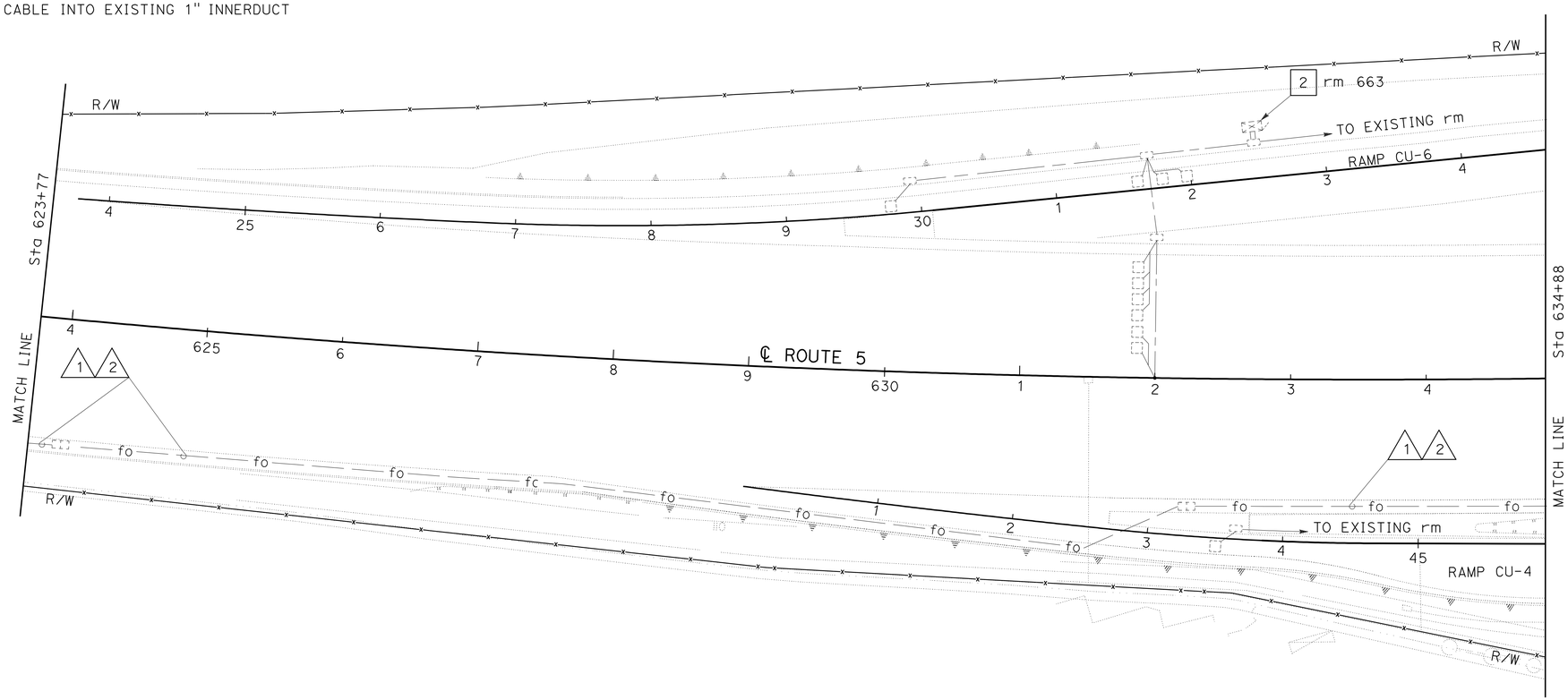


# COMMUNICATION SYSTEM

SCALE: 1" = 50'

**E-11**

THIS PLAN IS ACCURATE FOR ELECTRICAL WORK ONLY.

STATE OF CALIFORNIA - DEPARTMENT OF TRANSPORTATION
Caltrans® **ELECTRICAL DESIGN**

FUNCTIONAL SUPERVISOR: SHAHRAM SHAHRIARI
CALCULATED-DESIGNED BY: FRANCIS M. ALVIAR
CHECKED BY: VANESSA V. TRUONG
REVISED BY / DATE REVISED

LAST REVISION 11-25-09 | DATE PLOTTED => 01-MAR-2010 | TIME PLOTTED => 12:56

| Dist | COUNTY | ROUTE | POST MILES TOTAL PROJECT | SHEET No. | TOTAL SHEETS |
|---|---|---|---|---|---|
| 12 | Ora | 5 | 24.9/30.3 | 20 | 67 |

REGISTERED ELECTRICAL ENGINEER 12-28-09 DATE

2-22-10
PLANS APPROVAL DATE

REGISTERED PROFESSIONAL ENGINEER SHAHRAM SHAHRIARI No. E13485 Exp. 9/30/10 ELECTRICAL STATE OF CALIFORNIA

*THE STATE OF CALIFORNIA OR ITS OFFICERS OR AGENTS SHALL NOT BE RESPONSIBLE FOR THE ACCURACY OR COMPLETENESS OF SCANNED COPIES OF THIS PLAN SHEET.*

## NOTES:

1. FOR ACCURATE RIGHT OF WAY AND ACCESS DATA, CONTACT RIGHT OF WAY ENGINEERING AT THE DISTRICT OFFICE.
2. EXISTING UTILITY FACILITIES HAVE NOT BEEN PLOTTED ON THESE PLANS.

## EXISTING CONDUCTOR AND CONDUIT SCHEDULE

| CONDUCTOR TYPE | FUNCTION | 1 | 2 | 3 | 4 | 5 | 6 | 7 | 8 | 9 |
|---|---|---|---|---|---|---|---|---|---|---|
| 25P22 | DATA/PHONE | 1 | | | | | | | 1 | |
| 12 MMFO CABLE | SH VIDEO | 1 | | | | | | | 1 | |
| 72 SMFO CABLE | VIDEO TRUNK | 1 | | | | | | | 1 | |
| 72 SMFO CABLE | COMMUNICATION | 1(*) | | | | | | | | 1(N) |
| 8P22 | RM/CMS/CCTV | | | | | 1 | | 1 | | |
| 2 MMFO CABLE | SH VIDEO | | | | | 1 | | 1 | | |
| RG-6A/U COAX | BB VIDEO | | | 1 | | 1 | | | | |
| 27C18 CABLE | CONTROL | | | 1 | | 1 | | | | |
| #8 | GROUND | | | 1 | 1 | 1 | 1 | | | |
| #6 | POWER | | | | 2 | | 2 | | | |
| 1" INNERDUCT | FOR SMFO & MMFO | 4 | | | | | | | 2 | 3(N) |
| PULL ROPE | | | 1 | | | | | | | 1 |
| CONDUIT SIZE | | 4" | 4" | 3" | 2" | 3" | 3" | 3" | 3" | 3" |

(*) - INSTALL NEW CABLE INTO EXISTING 1" INNERDUCT
(N) - NEW

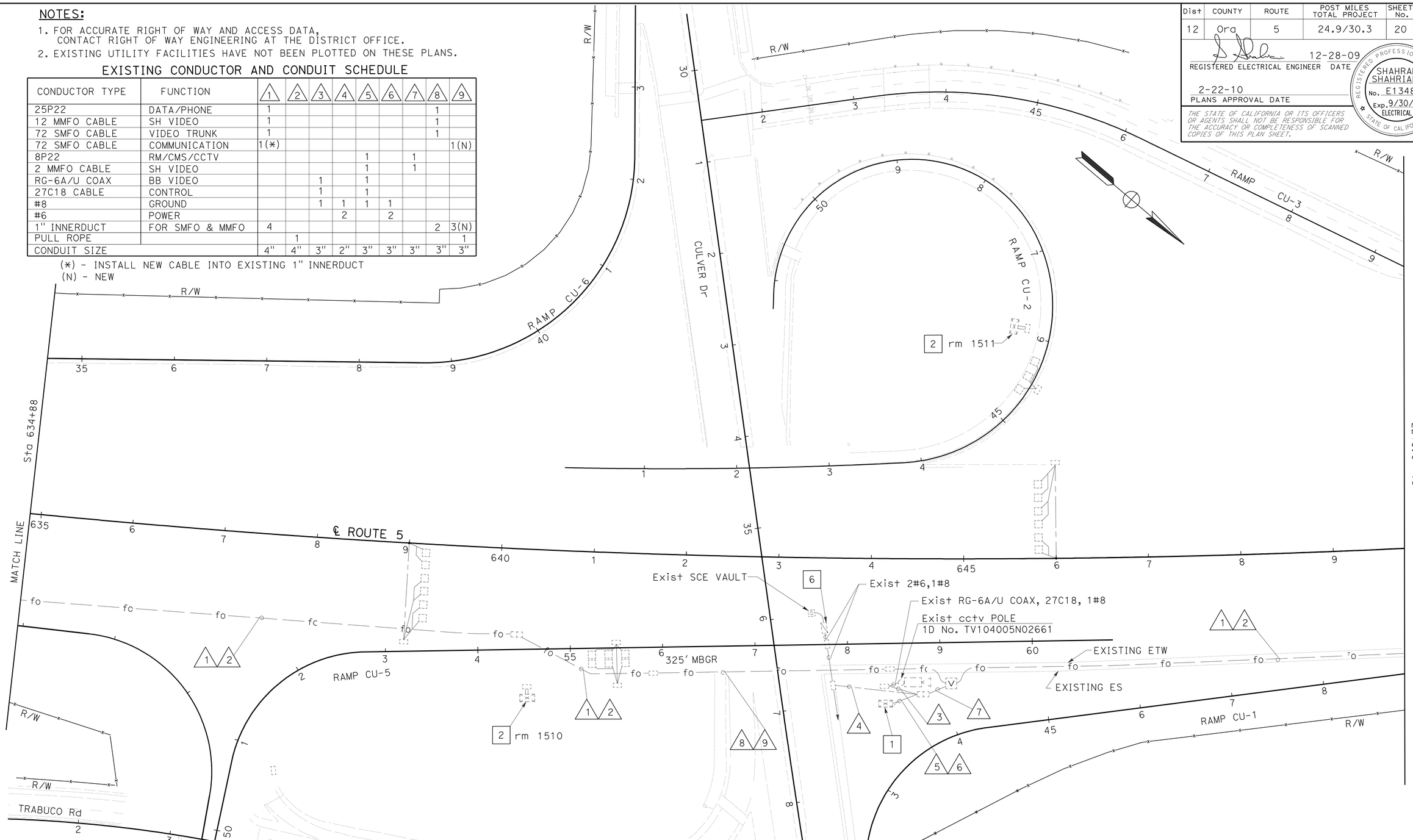


THIS PLAN IS ACCURATE FOR ELECTRICAL WORK ONLY.

# COMMUNICATION SYSTEM

SCALE: 1" = 50'

**E-12**

STATE OF CALIFORNIA - DEPARTMENT OF TRANSPORTATION
Caltrans®
**ELECTRICAL DESIGN**

FUNCTIONAL SUPERVISOR: SHAHRAM SHAHRIARI
CALCULATED-DESIGNED BY: FRANCIS M. ALVIAR
CHECKED BY: VANESSA V. TRUONG
REVISED BY / DATE REVISED

LAST REVISION 12-08-09 | DATE PLOTTED => 03-MAR-2010 | TIME PLOTTED => 11:00

BORDER LAST REVISED 4/11/2008 | RELATIVE BORDER SCALE IS IN INCHES 0 1 2 3 | USERNAME => trmikesl | DGN FILE => c0k150ua012.dgn | CU 12390 | EA 0K1501

| Dist | COUNTY | ROUTE | POST MILES TOTAL PROJECT | SHEET No. | TOTAL SHEETS |
|---|---|---|---|---|---|
| 12 | Ora | 5 | 24.9/30.3 | 21 | 67 |

REGISTERED ELECTRICAL ENGINEER 12-28-09 DATE

2-22-10
PLANS APPROVAL DATE

REGISTERED PROFESSIONAL ENGINEER SHAHRAM SHAHRIARI No. E13485 Exp. 9/30/10 ELECTRICAL STATE OF CALIFORNIA

*THE STATE OF CALIFORNIA OR ITS OFFICERS OR AGENTS SHALL NOT BE RESPONSIBLE FOR THE ACCURACY OR COMPLETENESS OF SCANNED COPIES OF THIS PLAN SHEET.*

## NOTES:

1. FOR ACCURATE RIGHT OF WAY AND ACCESS DATA, CONTACT RIGHT OF WAY ENGINEERING AT DISTRICT OFFICE.
2. EXISTING UTILITY FACILITIES HAVE NOT BEEN PLOTTED ON THESE PLANS.

## EXISTING CONDUCTOR AND CONDUIT SCHEDULE

| CONDUCTOR TYPE | FUNCTION | 1 | 2 | 3 |
|---|---|---|---|---|
| 50P22 | DATA/PHONE | 1 | | |
| 12 MMFO CABLE | SH VIDEO | 1 | | |
| 72 SMFO CABLE | VIDEO TRUNK | 1 | | |
| 72 SMFO CABLE | COMMUNICATION | 1(*) | | |
| 8P22 | RM/CMS/CCTV | | | 1 |
| PULL ROPE | | | 1 | |
| CONDUIT SIZE | | 4" | 4" | 2" |

(*) - INSTALL NEW CABLE INTO EXISTING 1" INNERDUCT

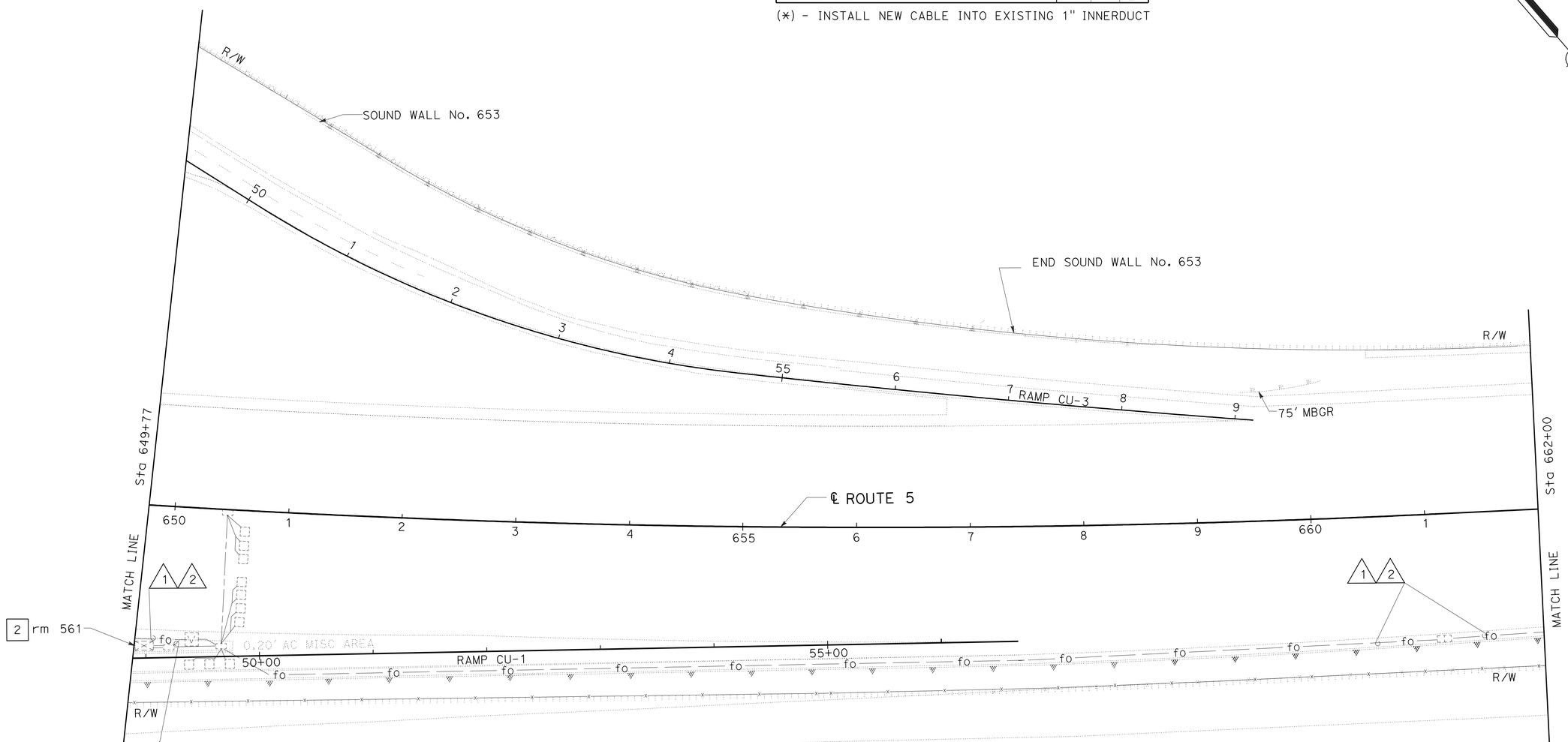


THIS PLAN IS ACCURATE FOR ELECTRICAL WORK ONLY.

# COMMUNICATION SYSTEM

SCALE: 1" = 50'

**E-13**

STATE OF CALIFORNIA - DEPARTMENT OF TRANSPORTATION
Caltrans® **ELECTRICAL DESIGN**

FUNCTIONAL SUPERVISOR: SHAHRAM SHAHRIARI
CALCULATED-DESIGNED BY: FRANCIS M. ALVIAR
CHECKED BY: VANESSA V. TRUONG
REVISED BY / DATE REVISED

LAST REVISION 11-25-09 | DATE PLOTTED => 01-MAR-2010 | TIME PLOTTED => 12:56

| Dist | COUNTY | ROUTE | POST MILES TOTAL PROJECT | SHEET No. | TOTAL SHEETS |
|---|---|---|---|---|---|
| 12 | Ora | 5 | 24.9/30.3 | 22 | 67 |

12-28-09
REGISTERED ELECTRICAL ENGINEER DATE

2-22-10
PLANS APPROVAL DATE

REGISTERED PROFESSIONAL ENGINEER
SHAHRAM SHAHRIARI
No. E13485
Exp. 9/30/10
ELECTRICAL
STATE OF CALIFORNIA

*THE STATE OF CALIFORNIA OR ITS OFFICERS OR AGENTS SHALL NOT BE RESPONSIBLE FOR THE ACCURACY OR COMPLETENESS OF SCANNED COPIES OF THIS PLAN SHEET.*

NOTES:

1. FOR ACCURATE RIGHT OF WAY AND ACCESS DATA, CONTACT RIGHT OF WAY ENGINEERING AT DISTRICT OFFICE.
2. EXISTING UTILITY FACILITIES HAVE NOT BEEN PLOTTED ON THESE PLANS.

EXISTING CONDUCTOR AND CONDUIT SCHEDULE

| CONDUCTOR TYPE | FUNCTION | 1 | 2 |
|---|---|---|---|
| 25P22 | DATA/PHONE | 1 | |
| 12 MMFO CABLE | SH VIDEO | 1 | |
| 72 SMFO CABLE | VIDEO TRUNK | 1 | |
| 72 SMFO CABLE | COMMUNICATION | 1(*) | |
| 1" INNERDUCT | | 4 | |
| PULL ROPE | | | 1 |
| CONDUIT SIZE | | 4" | 4" |

(*) - INSTALL NEW CABLE INTO EXISTING 1" INNERDUCT

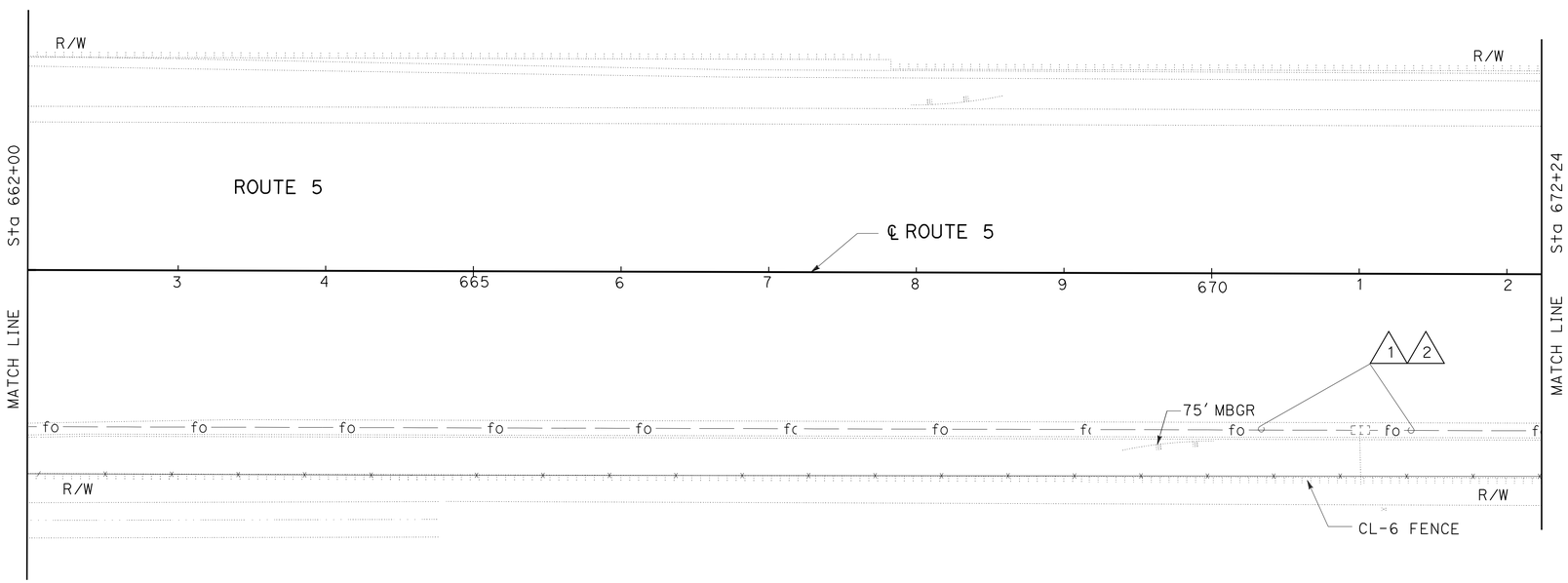


THIS PLAN IS ACCURATE FOR ELECTRICAL WORK ONLY.

# COMMUNICATION SYSTEM

SCALE: 1" = 50'

E-14

STATE OF CALIFORNIA - DEPARTMENT OF TRANSPORTATION
Caltrans ELECTRICAL DESIGN

FUNCTIONAL SUPERVISOR: SHAHRAM SHAHRIARI
CALCULATED-DESIGNED BY: FRANCIS M. ALVIAR
CHECKED BY: VANESSA V. TRUONG
REVISED BY
DATE REVISED

LAST REVISION 11-25-09
DATE PLOTTED => 01-MAR-2010
TIME PLOTTED => 12:56

| Dist | COUNTY | ROUTE | POST MILES TOTAL PROJECT | SHEET No. | TOTAL SHEETS |
|---|---|---|---|---|---|
| 12 | Ora | 5 | 24.9/30.3 | 23 | 67 |

REGISTERED ELECTRICAL ENGINEER 12-28-09 DATE

2-22-10
PLANS APPROVAL DATE

REGISTERED PROFESSIONAL ENGINEER SHAHRAM SHAHRIARI No. E13485 Exp. 9/30/10 ELECTRICAL STATE OF CALIFORNIA

*THE STATE OF CALIFORNIA OR ITS OFFICERS OR AGENTS SHALL NOT BE RESPONSIBLE FOR THE ACCURACY OR COMPLETENESS OF SCANNED COPIES OF THIS PLAN SHEET.*

NOTES:

1. FOR ACCURATE RIGHT OF WAY AND ACCESS DATA, CONTACT RIGHT OF WAY ENGINEERING AT DISTRICT OFFICE.
2. EXISTING UTILITY FACILITIES HAVE NOT BEEN PLOTTED ON THESE PLANS.

EXISTING CONDUCTOR AND CONDUIT SCHEDULE

| CONDUCTOR TYPE | FUNCTION | 1 | 2 | 3 | 4 |
|---|---|---|---|---|---|
| 25P22 | DATA/PHONE | 1 | | 1 | |
| 12 MMFO CABLE | SH VIDEO | 1 | | 1 | |
| 72 SMFO CABLE | VIDEO TRUNK | 1 | | 1 | |
| 72 SMFO CABLE | COMMUNICATION | 1(*) | | | 1(N) |
| 1" INNERDUCT | FOR SMFO & MMFO | 4 | | 2 | 3(N) |
| PULL ROPE | | | 1 | | |
| CONDUIT SIZE | | 4" | 4" | 3" | 3" |

(N) - NEW
(*) - INSTALL NEW CABLE INTO EXISTING 1" INNERDUCT

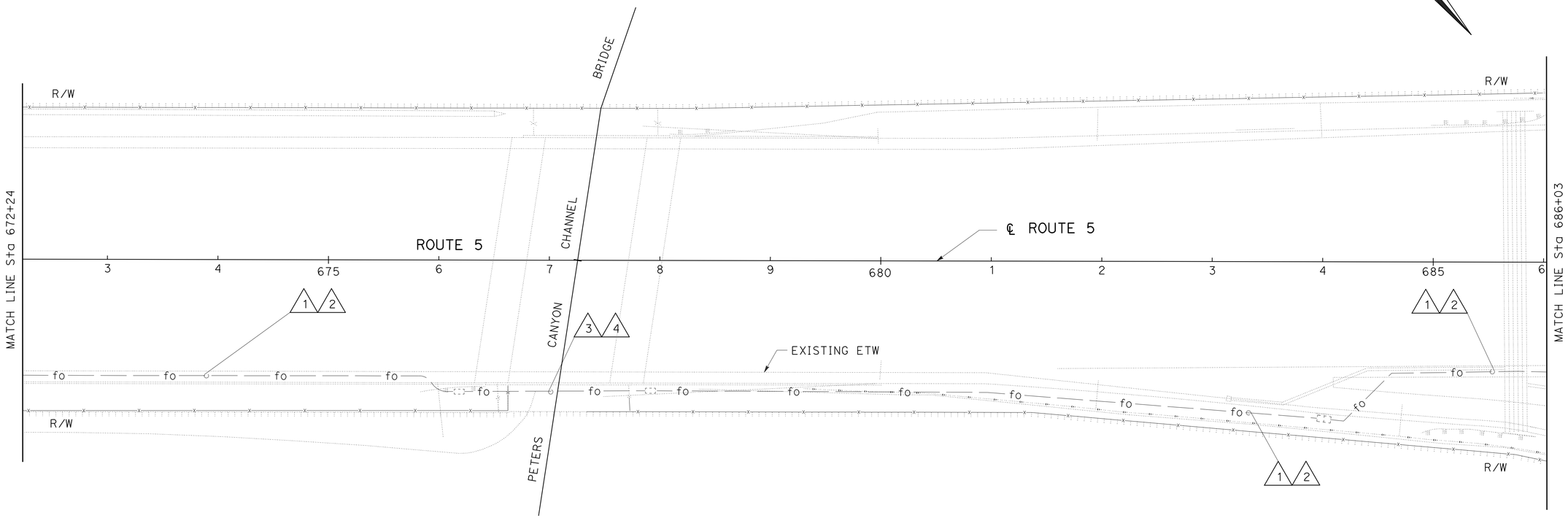


THIS PLAN IS ACCURATE FOR ELECTRICAL WORK ONLY.

# COMMUNICATION SYSTEM

SCALE: 1" = 50'

**E-15**

STATE OF CALIFORNIA - DEPARTMENT OF TRANSPORTATION
Caltrans® ELECTRICAL DESIGN

FUNCTIONAL SUPERVISOR: SHAHRAM SHAHRIARI
CALCULATED-DESIGNED BY: FRANCIS M. ALVIAR
CHECKED BY: VANESSA V. TRUONG
REVISED BY
DATE REVISED

LAST REVISION 11-25-09 DATE PLOTTED => 01-MAR-2010 TIME PLOTTED => 12:56

| Dist | COUNTY | ROUTE | POST MILES TOTAL PROJECT | SHEET No. | TOTAL SHEETS |
|---|---|---|---|---|---|
| 12 | Ora | 5 | 24.9/30.3 | 24 | 67 |

REGISTERED ELECTRICAL ENGINEER 12-28-09 DATE

2-22-10
PLANS APPROVAL DATE

REGISTERED PROFESSIONAL ENGINEER SHAHRAM SHAHRIARI No. E13485 Exp. 9/30/10 ELECTRICAL STATE OF CALIFORNIA

*THE STATE OF CALIFORNIA OR ITS OFFICERS OR AGENTS SHALL NOT BE RESPONSIBLE FOR THE ACCURACY OR COMPLETENESS OF SCANNED COPIES OF THIS PLAN SHEET.*

NOTES:

1. FOR ACCURATE RIGHT OF WAY AND ACCESS DATA, CONTACT RIGHT OF WAY ENGINEERING AT DISTRICT OFFICE.
2. EXISTING UTILITY FACILITIES HAVE NOT BEEN PLOTTED ON THESE PLANS.

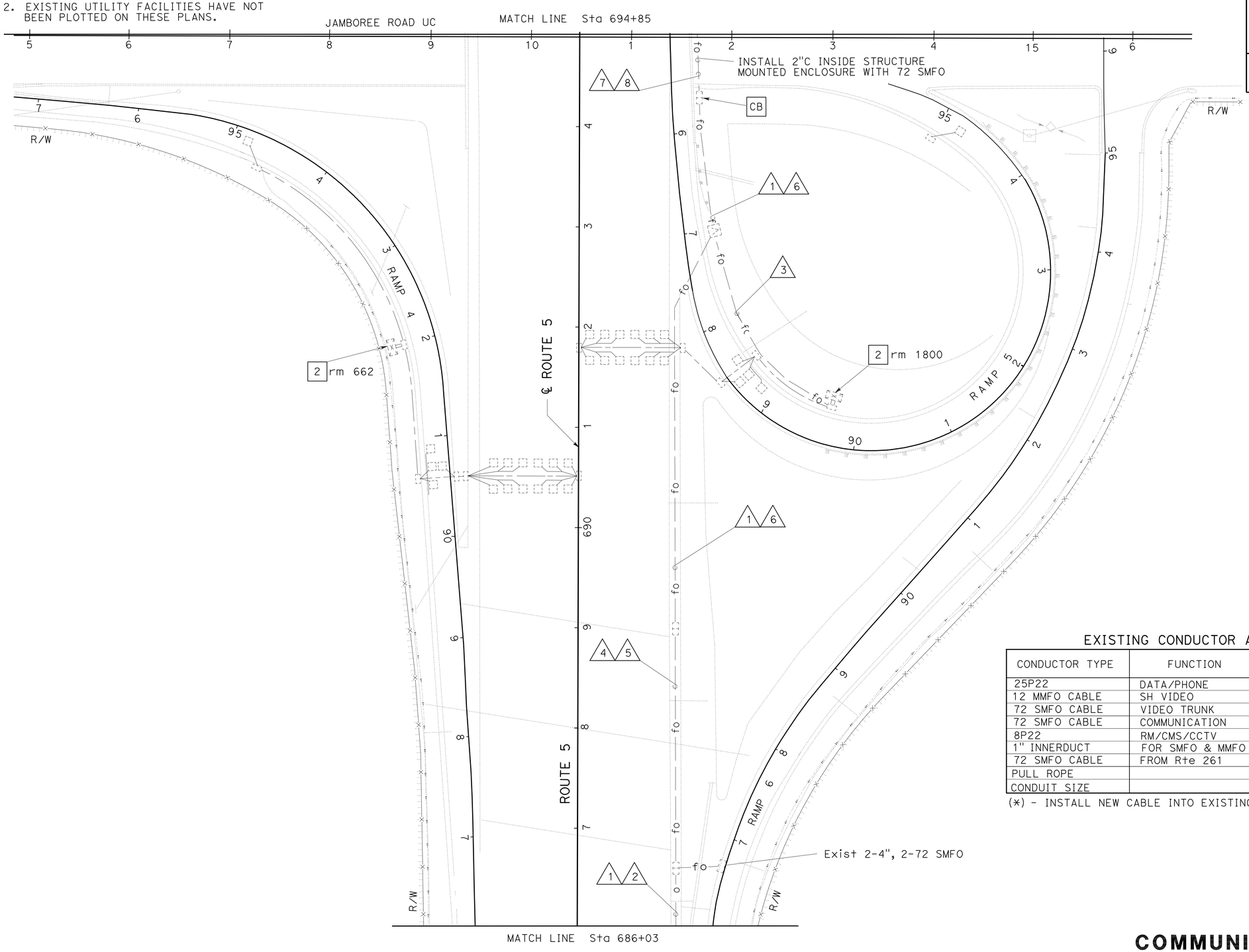


EXISTING CONDUCTOR AND CONDUIT SCHEDULE

| CONDUCTOR TYPE | FUNCTION | 1 | 2 | 3 | 4 | 5 | 6 | 7 | 8 |
|---|---|---|---|---|---|---|---|---|---|
| 25P22 | DATA/PHONE | 1 | | | 1 | | | 1 | |
| 12 MMFO CABLE | SH VIDEO | 1 | | | 1 | | | 1 | |
| 72 SMFO CABLE | VIDEO TRUNK | 1 | | | 1 | | | 1 | |
| 72 SMFO CABLE | COMMUNICATION | 1(*) | | | | 1(*) | | | |
| 8P22 | RM/CMS/CCTV | | | 1 | | | | | |
| 1" INNERDUCT | FOR SMFO & MMFO | 4 | | | 2 | | | | |
| 72 SMFO CABLE | FROM Rte 261 | | | | | 2 | 2 | 1 | 1 |
| PULL ROPE | | | 1 | | | 2 | 2 | 1 | 1 |
| CONDUIT SIZE | | 4" | 4" | 2" | 3" | 3" | 4" | 4" | 2" |

(*) - INSTALL NEW CABLE INTO EXISTING 1" INNERDUCT

THIS PLAN IS ACCURATE FOR ELECTRICAL WORK ONLY.

# COMMUNICATION SYSTEM

SCALE: 1" = 50'

**E-16**

STATE OF CALIFORNIA - DEPARTMENT OF TRANSPORTATION
Caltrans® **ELECTRICAL DESIGN**

FUNCTIONAL SUPERVISOR: SHAHRAM SHAHRIARI
CALCULATED-DESIGNED BY: FRANCIS M. ALVIAR
CHECKED BY: VANESSA V. TRUONG
REVISED BY / DATE REVISED

LAST REVISION 11-25-09
DATE PLOTTED => 01-MAR-2010
TIME PLOTTED => 12:57

| Dist | COUNTY | ROUTE | POST MILES TOTAL PROJECT | SHEET No. | TOTAL SHEETS |
|---|---|---|---|---|---|
| 12 | Ora | 5 | 24.9/30.3 | 25 | 67 |

REGISTERED ELECTRICAL ENGINEER 12-28-09 DATE

2-22-10
PLANS APPROVAL DATE

REGISTERED PROFESSIONAL ENGINEER SHAHRAM SHAHRIARI No. E13485 Exp. 9/30/10 ELECTRICAL STATE OF CALIFORNIA

*THE STATE OF CALIFORNIA OR ITS OFFICERS OR AGENTS SHALL NOT BE RESPONSIBLE FOR THE ACCURACY OR COMPLETENESS OF SCANNED COPIES OF THIS PLAN SHEET.*

NOTES:

1. FOR ACCURATE RIGHT OF WAY AND ACCESS DATA, CONTACT RIGHT OF WAY ENGINEERING AT DISTRICT OFFICE.
2. EXISTING UTILITY FACILITIES HAVE NOT BEEN PLOTTED ON THESE PLANS.

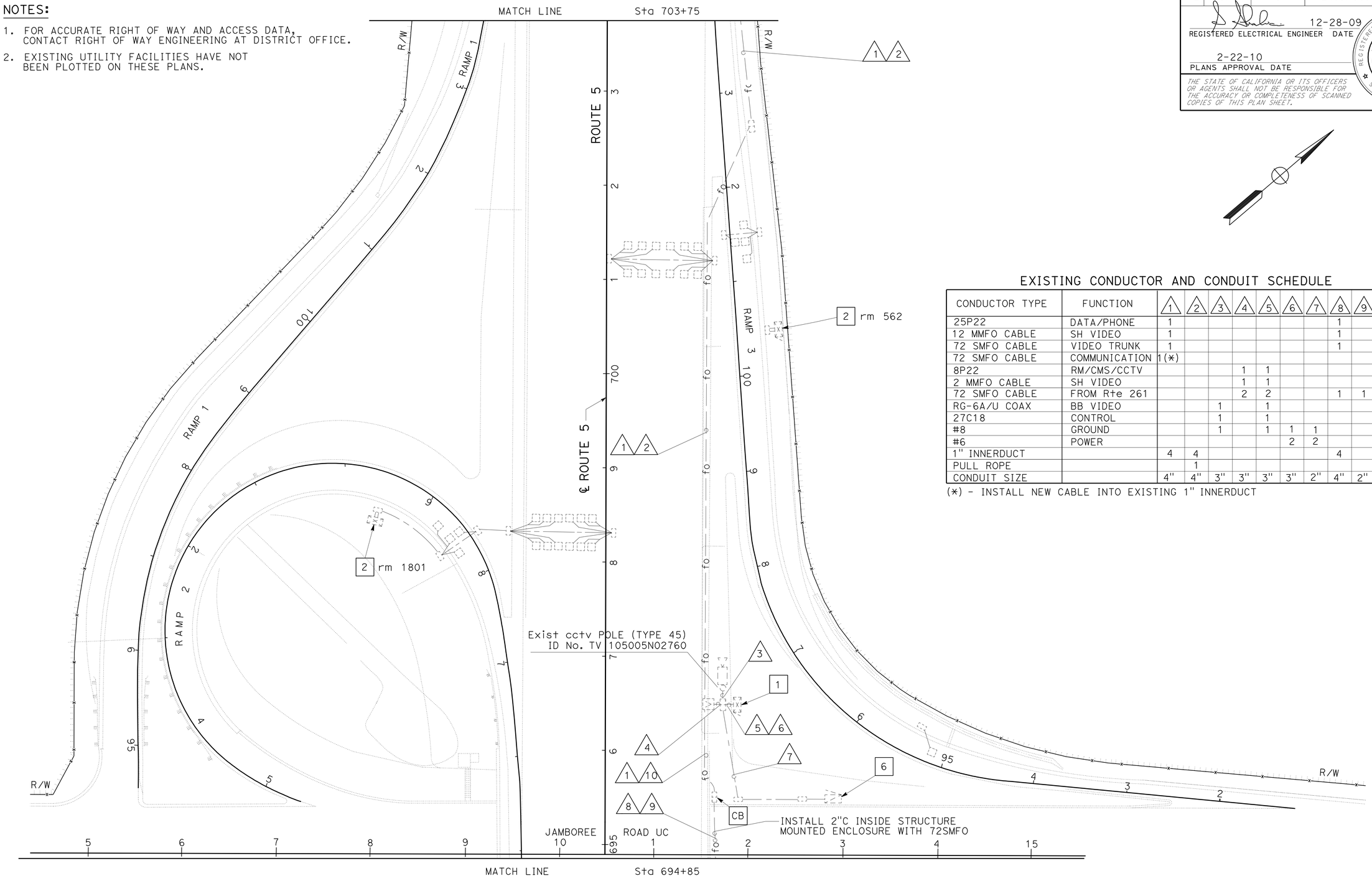


## EXISTING CONDUCTOR AND CONDUIT SCHEDULE

| CONDUCTOR TYPE | FUNCTION | 1 | 2 | 3 | 4 | 5 | 6 | 7 | 8 | 9 | 10 |
|---|---|---|---|---|---|---|---|---|---|---|---|
| 25P22 | DATA/PHONE | 1 | | | | | | | 1 | | |
| 12 MMFO CABLE | SH VIDEO | 1 | | | | | | | 1 | | |
| 72 SMFO CABLE | VIDEO TRUNK | 1 | | | | | | | 1 | | |
| 72 SMFO CABLE | COMMUNICATION | 1(*) | | | | | | | | | |
| 8P22 | RM/CMS/CCTV | | | | 1 | 1 | | | | | |
| 2 MMFO CABLE | SH VIDEO | | | | 1 | 1 | | | | | |
| 72 SMFO CABLE | FROM Rte 261 | | | | 2 | 2 | | | 1 | 1 | 2 |
| RG-6A/U COAX | BB VIDEO | | | 1 | | 1 | | | | | |
| 27C18 | CONTROL | | | 1 | | 1 | | | | | |
| #8 | GROUND | | | 1 | | 1 | 1 | 1 | | | |
| #6 | POWER | | | | | | 2 | 2 | | | |
| 1" INNERDUCT | | 4 | 4 | | | | | | 4 | | 4 |
| PULL ROPE | | | 1 | | | | | | | | |
| CONDUIT SIZE | | 4" | 4" | 3" | 3" | 3" | 3" | 2" | 4" | 2" | 3" |

(*) - INSTALL NEW CABLE INTO EXISTING 1" INNERDUCT

# COMMUNICATION SYSTEM

SCALE: 1" = 50'

THIS PLAN IS ACCURATE FOR ELECTRICAL WORK ONLY.

E-17

STATE OF CALIFORNIA - DEPARTMENT OF TRANSPORTATION
Caltrans ELECTRICAL DESIGN

FUNCTIONAL SUPERVISOR: SHAHRAM SHAHRIARI
CALCULATED-DESIGNED BY: FRANCIS M. ALVIAR
CHECKED BY: VANESSA V. TRUONG
REVISED BY
DATE REVISED

LAST REVISION 11-25-09
DATE PLOTTED => 01-MAR-2010
TIME PLOTTED => 12:57

| Dist | COUNTY | ROUTE | POST MILES TOTAL PROJECT | SHEET No. | TOTAL SHEETS |
|---|---|---|---|---|---|
| 12 | Ora | 5 | 24.9/30.3 | 26 | 67 |

REGISTERED ELECTRICAL ENGINEER 12-28-09 DATE

2-22-10
PLANS APPROVAL DATE

REGISTERED PROFESSIONAL ENGINEER SHAHRAM SHAHRIARI No. E13485 Exp. 9/30/10 ELECTRICAL STATE OF CALIFORNIA

*THE STATE OF CALIFORNIA OR ITS OFFICERS OR AGENTS SHALL NOT BE RESPONSIBLE FOR THE ACCURACY OR COMPLETENESS OF SCANNED COPIES OF THIS PLAN SHEET.*

## NOTES:

1. FOR ACCURATE RIGHT OF WAY AND ACCESS DATA, CONTACT RIGHT OF WAY ENGINEERING AT DISTRICT OFFICE.
2. EXISTING UTILITY FACILITIES HAVE NOT BEEN PLOTTED ON THESE PLANS.

## EXISTING CONDUCTOR AND CONDUIT SCHEDULE

| CONDUCTOR TYPE | FUNCTION | 1 | 2 | 3 |
|---|---|---|---|---|
| 25P22 | DATA/PHONE | 1 | | |
| 12 MMFO CABLE | SH VIDEO | 1 | | |
| 72 SMFO CABLE | VIDEO TRUNK | 1 | | |
| 72 SMFO CABLE | COMMUNICATION | 1(*) | | 1(N) |
| PULL ROPE | | | 1 | |
| 1" INNERDUCT | | 4 | | 3(N) |
| CONDUIT SIZE | | 4" | 4" | 3" |

(N) - NEW
(*) - INSTALL NEW CABLE INTO EXISTING 1" INNERDUCT

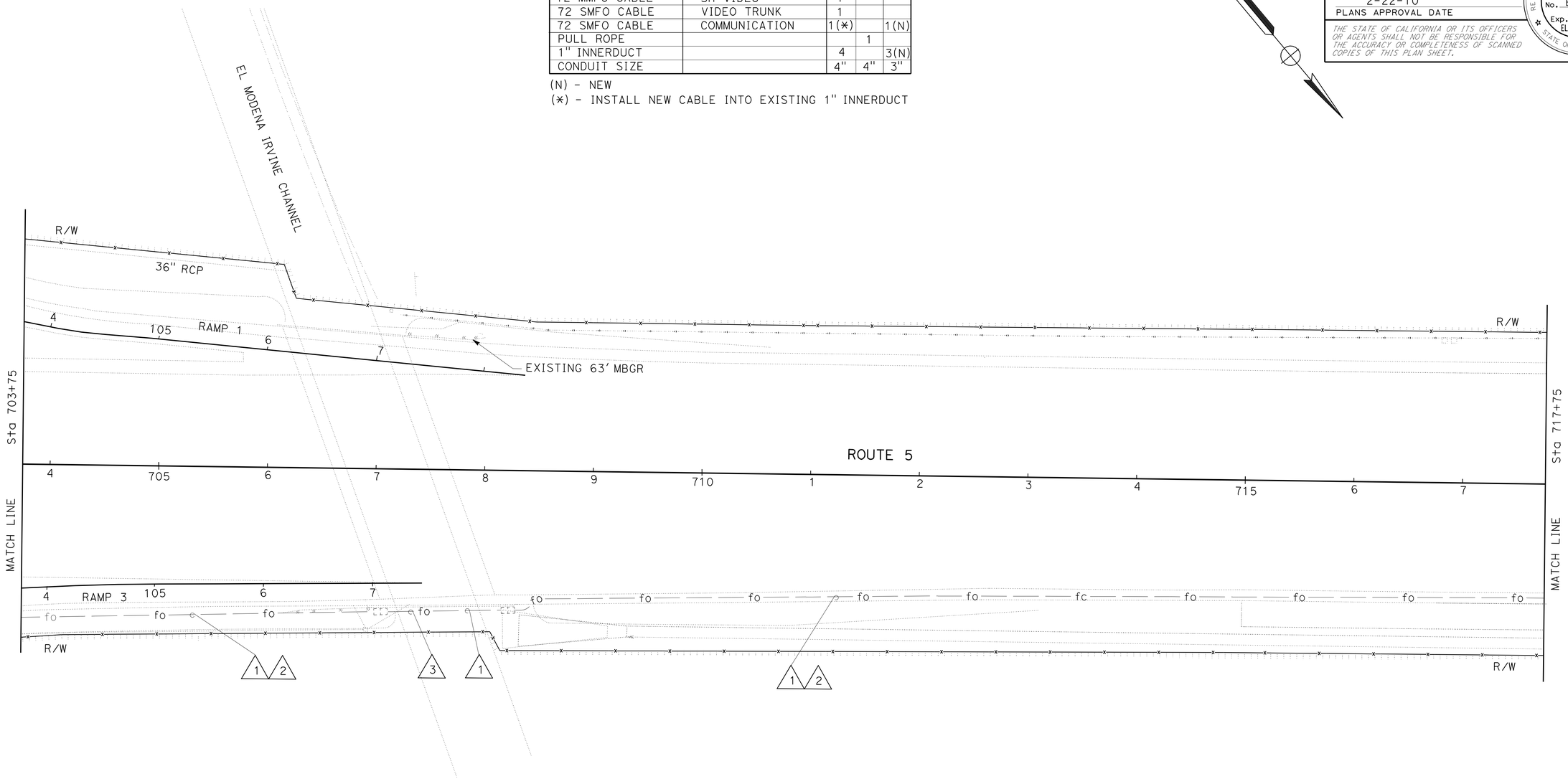


## COMMUNICATION SYSTEM

SCALE: 1" = 50'

**E-18**

THIS PLAN IS ACCURATE FOR ELECTRICAL WORK ONLY.

STATE OF CALIFORNIA - DEPARTMENT OF TRANSPORTATION
Caltrans® **ELECTRICAL DESIGN**

FUNCTIONAL SUPERVISOR: SHAHRAM SHAHRIARI
CALCULATED-DESIGNED BY: FRANCIS M. ALVIAR
CHECKED BY: VANESSA V. TRUONG
REVISED BY
DATE REVISED

LAST REVISION 11-25-09 | DATE PLOTTED => 01-MAR-2010 | TIME PLOTTED => 12:57

| Dist | COUNTY | ROUTE | POST MILES TOTAL PROJECT | SHEET No. | TOTAL SHEETS |
|---|---|---|---|---|---|
| 12 | Ora | 5 | 24.9/30.3 | 27 | 67 |

REGISTERED ELECTRICAL ENGINEER 12-28-09 DATE

2-22-10
PLANS APPROVAL DATE

REGISTERED PROFESSIONAL ENGINEER
SHAHRAM SHAHRIARI
No. E13485
Exp. 9/30/10
ELECTRICAL
STATE OF CALIFORNIA

*THE STATE OF CALIFORNIA OR ITS OFFICERS OR AGENTS SHALL NOT BE RESPONSIBLE FOR THE ACCURACY OR COMPLETENESS OF SCANNED COPIES OF THIS PLAN SHEET.*

## NOTES:

1. FOR ACCURATE RIGHT OF WAY AND ACCESS DATA, CONTACT RIGHT OF WAY ENGINEERING AT DISTRICT OFFICE.
2. EXISTING UTILITY FACILITIES HAVE NOT BEEN PLOTTED ON THESE PLANS.

## EXISTING CONDUCTOR AND CONDUIT SCHEDULE

| CONDUCTOR TYPE | FUNCTION | 1 | 2 |
|---|---|---|---|
| 50P22 | DATA/PHONE | 1 | |
| 12 MMFO CABLE | SH VIDEO | 1 | |
| 72 SMFO CABLE | VIDEO TRUNK | 1 | |
| 72 SMFO CABLE | COMMUNICATION | 1(*) | |
| PULL ROPE | | | 1 |
| 1" INNERDUCT | | 4 | |
| CONDUIT SIZE | | 4" | 4" |

(*) - INSTALL NEW CABLE INTO EXISTING 1" INNERDUCT

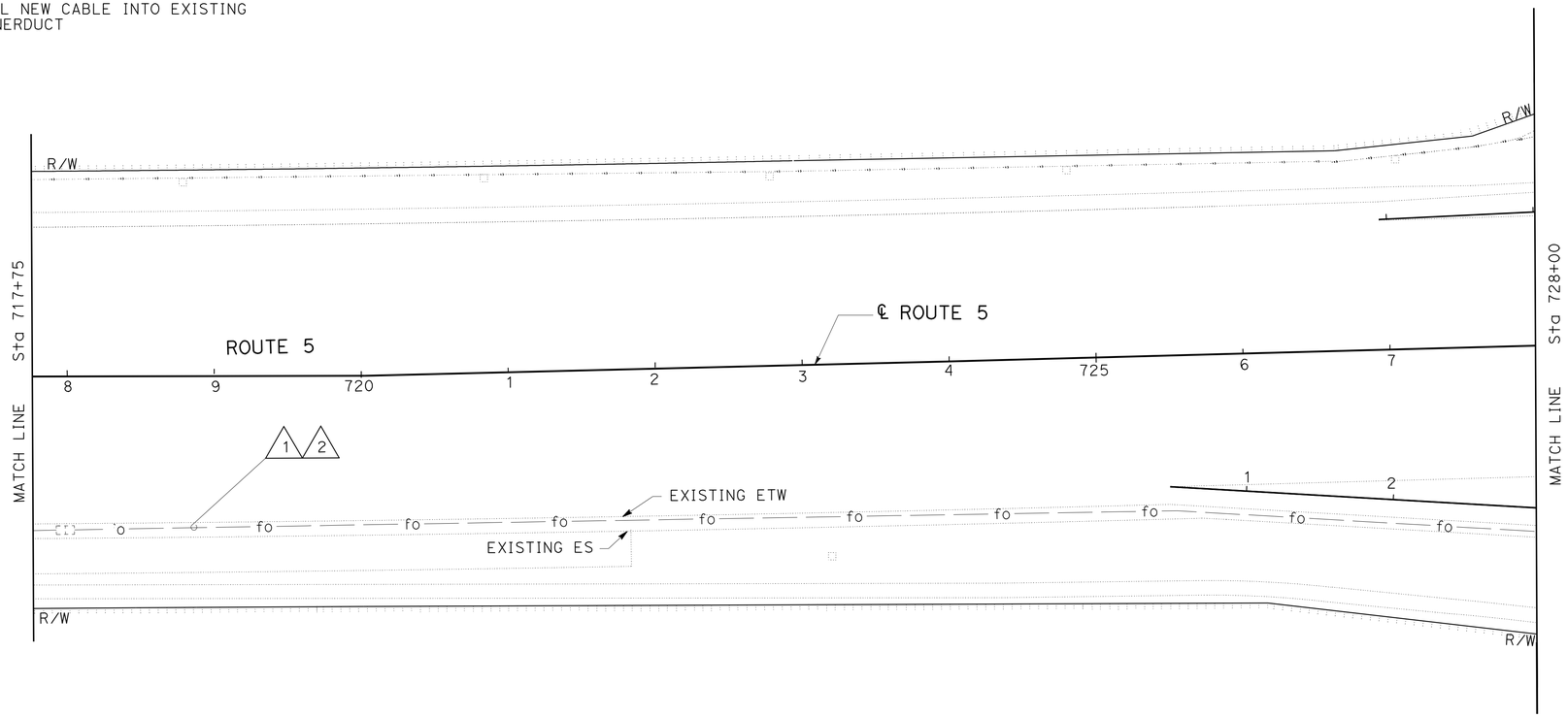


THIS PLAN IS ACCURATE FOR ELECTRICAL WORK ONLY.

# COMMUNICATION SYSTEM

SCALE: 1" = 50'

**E-19**

STATE OF CALIFORNIA - DEPARTMENT OF TRANSPORTATION
Caltrans
ELECTRICAL DESIGN

FUNCTIONAL SUPERVISOR: SHAHRAM SHAHRIARI
CALCULATED-DESIGNED BY: FRANCIS M. ALVIAR
CHECKED BY: VANESSA V. TRUONG
REVISED BY
DATE REVISED

LAST REVISION 11-25-09
DATE PLOTTED => 01-MAR-2010
TIME PLOTTED => 12:57

| Dist | COUNTY | ROUTE | POST MILES TOTAL PROJECT | SHEET No. | TOTAL SHEETS |
|---|---|---|---|---|---|
| 12 | Ora | 5 | 24.9/30.3 | 28 | 67 |

REGISTERED ELECTRICAL ENGINEER 12-28-09 DATE

2-22-10
PLANS APPROVAL DATE

REGISTERED PROFESSIONAL ENGINEER SHAHRAM SHAHRIARI No. E13485 Exp. 9/30/10 ELECTRICAL STATE OF CALIFORNIA

*THE STATE OF CALIFORNIA OR ITS OFFICERS OR AGENTS SHALL NOT BE RESPONSIBLE FOR THE ACCURACY OR COMPLETENESS OF SCANNED COPIES OF THIS PLAN SHEET.*

NOTES:

1. FOR ACCURATE RIGHT OF WAY AND ACCESS DATA, CONTACT RIGHT OF WAY ENGINEERING AT DISTRICT OFFICE.
2. EXISTING UTILITY FACILITIES HAVE NOT BEEN PLOTTED ON THESE PLANS.

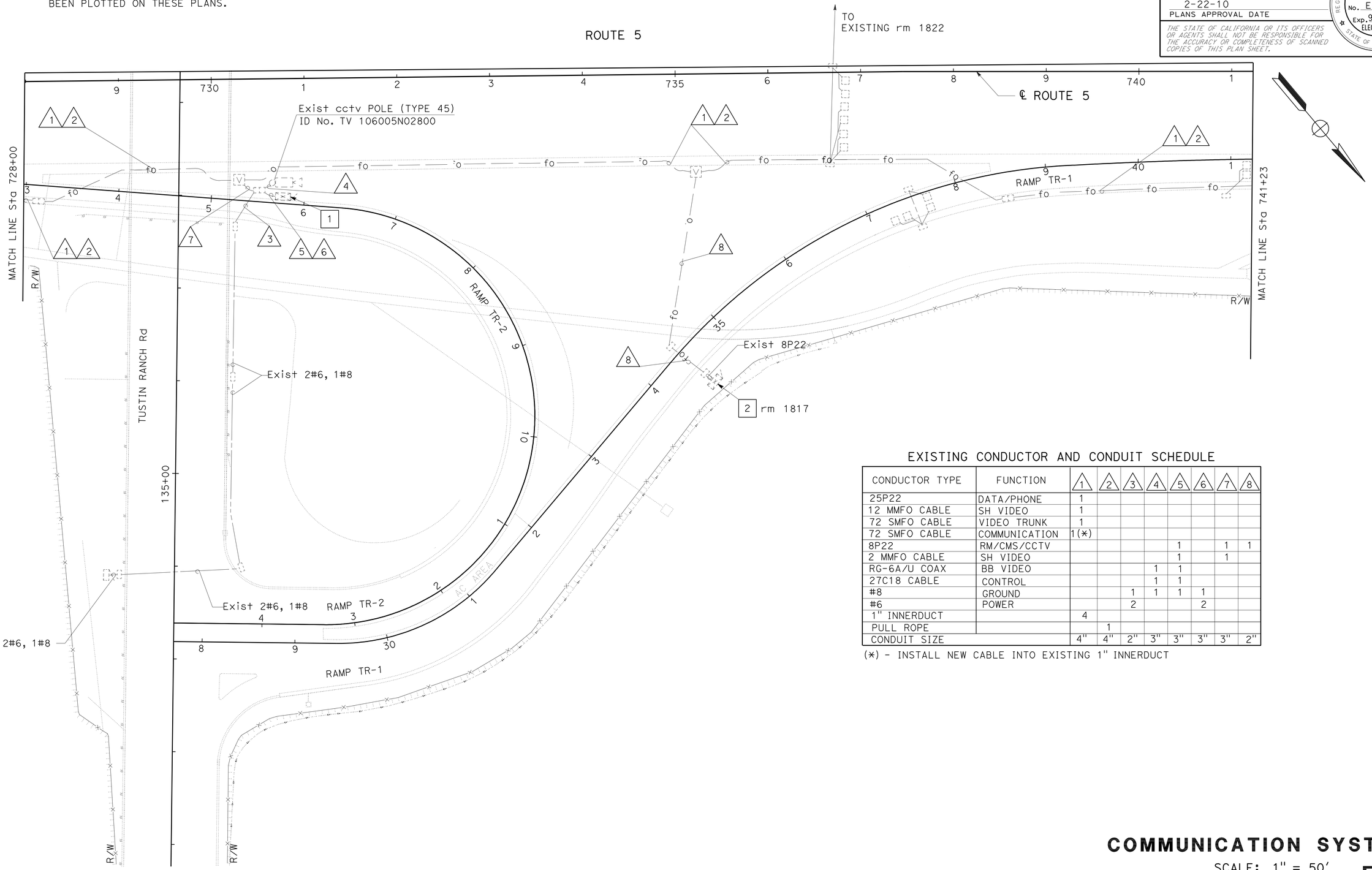


EXISTING CONDUCTOR AND CONDUIT SCHEDULE

| CONDUCTOR TYPE | FUNCTION | 1 | 2 | 3 | 4 | 5 | 6 | 7 | 8 |
|---|---|---|---|---|---|---|---|---|---|
| 25P22 | DATA/PHONE | 1 | | | | | | | |
| 12 MMFO CABLE | SH VIDEO | 1 | | | | | | | |
| 72 SMFO CABLE | VIDEO TRUNK | 1 | | | | | | | |
| 72 SMFO CABLE | COMMUNICATION | 1(*) | | | | | | | |
| 8P22 | RM/CMS/CCTV | | | | | 1 | | 1 | 1 |
| 2 MMFO CABLE | SH VIDEO | | | | | 1 | | 1 | |
| RG-6A/U COAX | BB VIDEO | | | | 1 | 1 | | | |
| 27C18 CABLE | CONTROL | | | | 1 | 1 | | | |
| #8 | GROUND | | | 1 | 1 | 1 | 1 | | |
| #6 | POWER | | | 2 | | | 2 | | |
| 1" INNERDUCT | | 4 | | | | | | | |
| PULL ROPE | | | 1 | | | | | | |
| CONDUIT SIZE | | 4" | 4" | 2" | 3" | 3" | 3" | 3" | 2" |

(*) - INSTALL NEW CABLE INTO EXISTING 1" INNERDUCT

THIS PLAN IS ACCURATE FOR ELECTRICAL WORK ONLY.

# COMMUNICATION SYSTEM

SCALE: 1" = 50'

**E-20**

STATE OF CALIFORNIA - DEPARTMENT OF TRANSPORTATION
Caltrans ELECTRICAL DESIGN

FUNCTIONAL SUPERVISOR: SHAHRAM SHAHRIARI
CALCULATED-DESIGNED BY: FRANCIS M. ALVIAR
CHECKED BY: VANESSA V. TRUONG
REVISED BY / DATE REVISED

LAST REVISION 12-08-09
DATE PLOTTED => 01-MAR-2010
TIME PLOTTED => 12:57

| Dist | COUNTY | ROUTE | POST MILES TOTAL PROJECT | SHEET No. | TOTAL SHEETS |
|---|---|---|---|---|---|
| 12 | Ora | 5 | 24.9/30.3 | 29 | 67 |

REGISTERED ELECTRICAL ENGINEER 12-28-09 DATE

2-22-10
PLANS APPROVAL DATE

REGISTERED PROFESSIONAL ENGINEER SHAHRAM SHAHRIARI No. E13485 Exp. 9/30/10 ELECTRICAL STATE OF CALIFORNIA

*THE STATE OF CALIFORNIA OR ITS OFFICERS OR AGENTS SHALL NOT BE RESPONSIBLE FOR THE ACCURACY OR COMPLETENESS OF SCANNED COPIES OF THIS PLAN SHEET.*

NOTE:

1. FOR ACCURATE RIGHT OF WAY AND ACCESS DATA, CONTACT RIGHT OF WAY ENGINEERING AT DISTRICT OFFICE.
2. EXISTING UTILITY FACILITIES HAVE NOT BEEN PLOTTED ON THESE PLANS.

EXISTING CONDUCTOR AND CONDUIT SCHEDULE

| CONDUCTOR TYPE | FUNCTION | 1 | 2 | 3 |
|---|---|---|---|---|
| 25P22 | DATA/PHONE | 1 | | |
| 12 MMFO CABLE | SH VIDEO | 1 | | |
| 72 SMFO CABLE | VIDEO TRUNK | 1 | | |
| 72 SMFO CABLE | COMMUNICATION | 1(*) | | |
| 8P22 | RM/CMS/CCTV | | | 1 |
| INNERDUCT | | 4 | | |
| PULL ROPE | | | 1 | |
| CONDUIT SIZE | | 4" | 4" | 2" |

(*) - INSTALL NEW CABLE INTO EXISTING 1" INNERDUCT

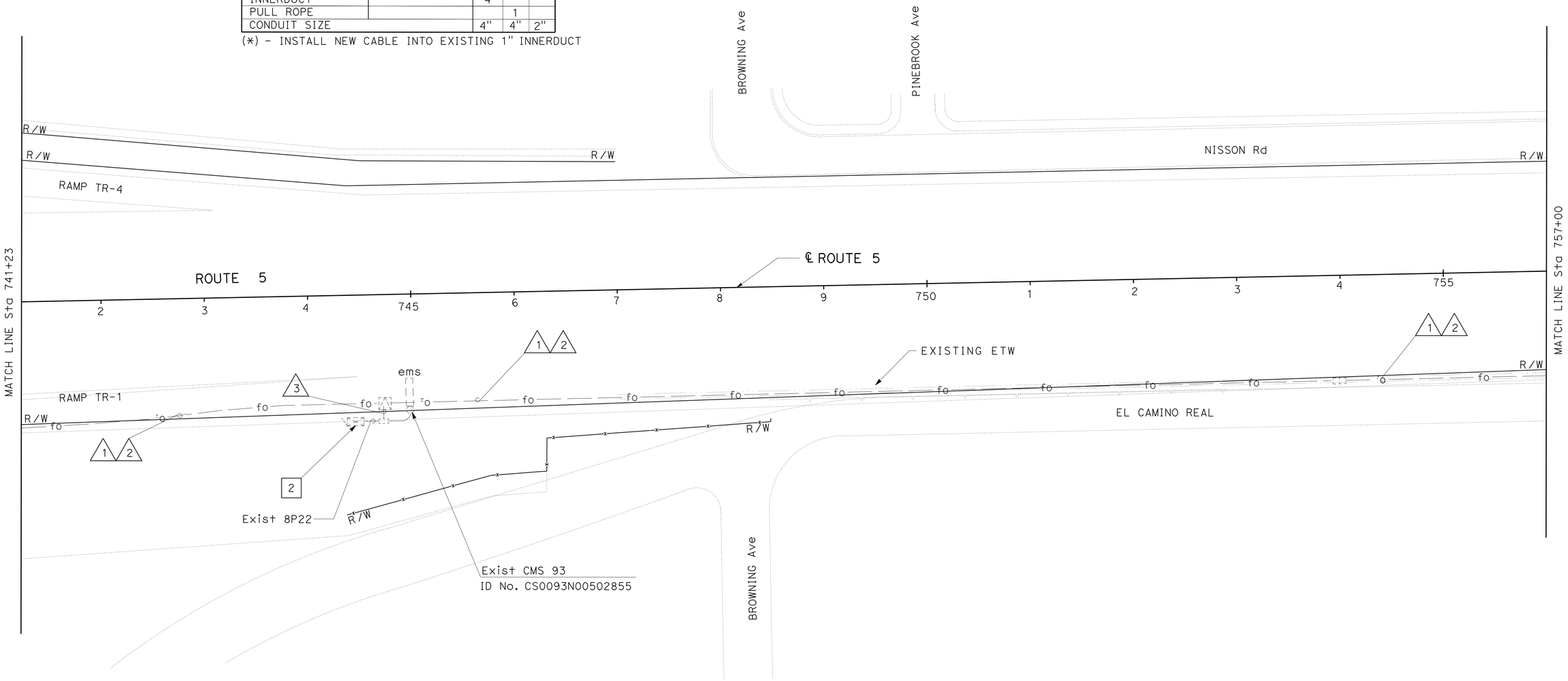


THIS PLAN IS ACCURATE FOR ELECTRICAL WORK ONLY.

# COMMUNICATION SYSTEM

SCALE: 1" = 50'

E-21

STATE OF CALIFORNIA - DEPARTMENT OF TRANSPORTATION
Caltrans ELECTRICAL DESIGN

FUNCTIONAL SUPERVISOR: SHAHRAM SHAHRIARI
CALCULATED-DESIGNED BY: FRANCIS M. ALVIAR
CHECKED BY: VANESSA V. TRUONG
REVISED BY / DATE REVISED

LAST REVISION 11-25-09 DATE PLOTTED => 01-MAR-2010 TIME PLOTTED => 12:57

| Dist | COUNTY | ROUTE | POST MILES TOTAL PROJECT | SHEET No. | TOTAL SHEETS |
|---|---|---|---|---|---|
| 12 | Ora | 5 | 24.9/30.3 | 30 | 67 |

REGISTERED ELECTRICAL ENGINEER 12-28-09 DATE

2-22-10
PLANS APPROVAL DATE

REGISTERED PROFESSIONAL ENGINEER SHAHRAM SHAHRIARI No. E13485 Exp. 9/30/10 ELECTRICAL STATE OF CALIFORNIA

*THE STATE OF CALIFORNIA OR ITS OFFICERS OR AGENTS SHALL NOT BE RESPONSIBLE FOR THE ACCURACY OR COMPLETENESS OF SCANNED COPIES OF THIS PLAN SHEET.*

NOTES:

1. FOR ACCURATE RIGHT OF WAY AND ACCESS DATA, CONTACT RIGHT OF WAY ENGINEERING AT DISTRICT OFFICE.
2. EXISTING UTILITY FACILITIES HAVE NOT BEEN PLOTTED ON THESE PLANS.

EXISTING CONDUCTOR AND CONDUIT SCHEDULE

| CONDUCTOR TYPE | FUNCTION | 1 | 2 | 3 | 4 | 5 | 6 | 7 |
|---|---|---|---|---|---|---|---|---|
| 25P22 | DATA/PHONE | 1 | | | | | | |
| 12 MMFO CABLE | SH VIDEO | 1 | | | | | | |
| 72 SMFO CABLE | VIDEO TRUNK | 1 | | | | | | |
| 72 SMFO CABLE | COMMUNICATION | 1(*) | | | | | | |
| 8P22 | RM/CMS/CCTV | | | | 1 | 1 | | 1 |
| 2 MMFO CABLE | SH VIDEO | | | | 1 | 1 | | 1 |
| RG-6A/U COAX | BB VIDEO | | | | 1 | 1 | | |
| 27C18 CABLE | CONTROL | | | | 1 | 1 | | |
| #8 | GROUND | | | 1 | 1 | 1 | 1 | |
| #6 | POWER | | | 2 | | | 2 | |
| INNERDUCT | | 4 | | | | | | |
| PULL ROPE | | | 1 | | | | | |
| CONDUIT SIZE | | 4" | 4" | 2" | 3" | 3" | 3" | 3" |

(*) - INSTALL NEW CABLE INTO EXISTING 1" INNERDUCT

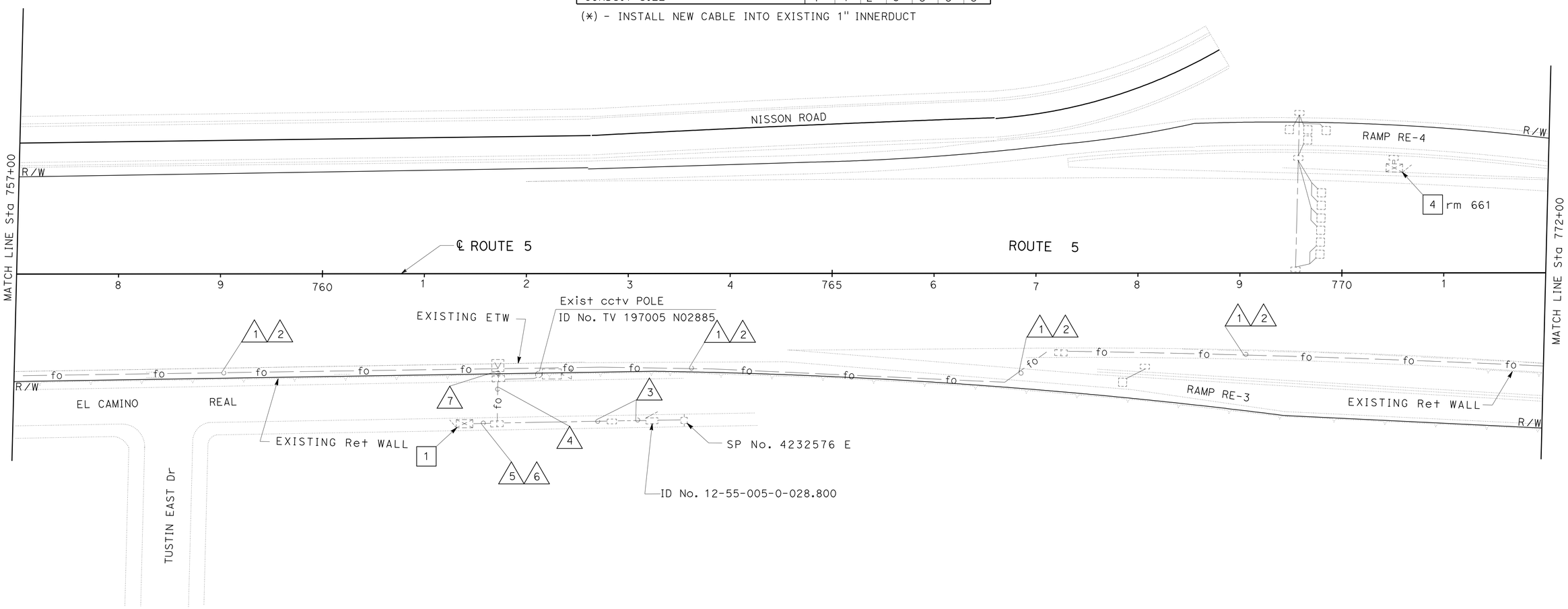


THIS PLAN IS ACCURATE FOR ELECTRICAL WORK ONLY.

# COMMUNICATION SYSTEM

SCALE: 1" = 50'

**E-22**

STATE OF CALIFORNIA - DEPARTMENT OF TRANSPORTATION
Caltrans® ELECTRICAL DESIGN

FUNCTIONAL SUPERVISOR: SHAHRAM SHAHRIARI
CALCULATED-DESIGNED BY: FRANCIS M. ALVIAR
CHECKED BY: VANESSA V. TRUONG
REVISED BY / DATE REVISED

LAST REVISION 11-25-09
DATE PLOTTED => 01-MAR-2010
TIME PLOTTED => 12:58

| Dist | COUNTY | ROUTE | POST MILES TOTAL PROJECT | SHEET No. | TOTAL SHEETS |
|---|---|---|---|---|---|
| 12 | Ora | 5 | 24.9/30.3 | 31 | 67 |

REGISTERED ELECTRICAL ENGINEER 12-28-09 DATE

2-22-10
PLANS APPROVAL DATE

REGISTERED PROFESSIONAL ENGINEER
SHAHRAM SHAHRIARI
No. E13485
Exp. 9/30/10
ELECTRICAL
STATE OF CALIFORNIA

*THE STATE OF CALIFORNIA OR ITS OFFICERS OR AGENTS SHALL NOT BE RESPONSIBLE FOR THE ACCURACY OR COMPLETENESS OF SCANNED COPIES OF THIS PLAN SHEET.*

NOTE:

1. FOR ACCURATE RIGHT OF WAY AND ACCESS DATA, CONTACT RIGHT OF WAY ENGINEERING AT DISTRICT OFFICE.
2. EXISTING UTILITY FACILITIES HAVE NOT BEEN PLOTTED ON THESE PLANS.

EXISTING CONDUCTOR AND CONDUIT SCHEDULE

| CONDUCTOR TYPE | FUNCTION | 1 | 2 | 3 | 4 |
|---|---|---|---|---|---|
| 25P22 | DATA/PHONE | 1 | | 1 | |
| 12 MMFO CABLE | SH VIDEO | 1 | | 1 | |
| 72 SMFO CABLE | VIDEO TRUNK | 1 | | 1 | |
| 72 SMFO CABLE | COMMUNICATION | 1(*) | | | 1(N) |
| 1" INNERDUCT | FOR SMFO & MMFO | 4 | | 3 | 3(N) |
| PULL ROPE | | | 1 | | 2(N) |
| CONDUIT SIZE | | 4" | 4" | 3" | 3" |

(N) - NEW
(*) - INSTALL NEW CABLE INTO EXISTING 1" INNERDUCT

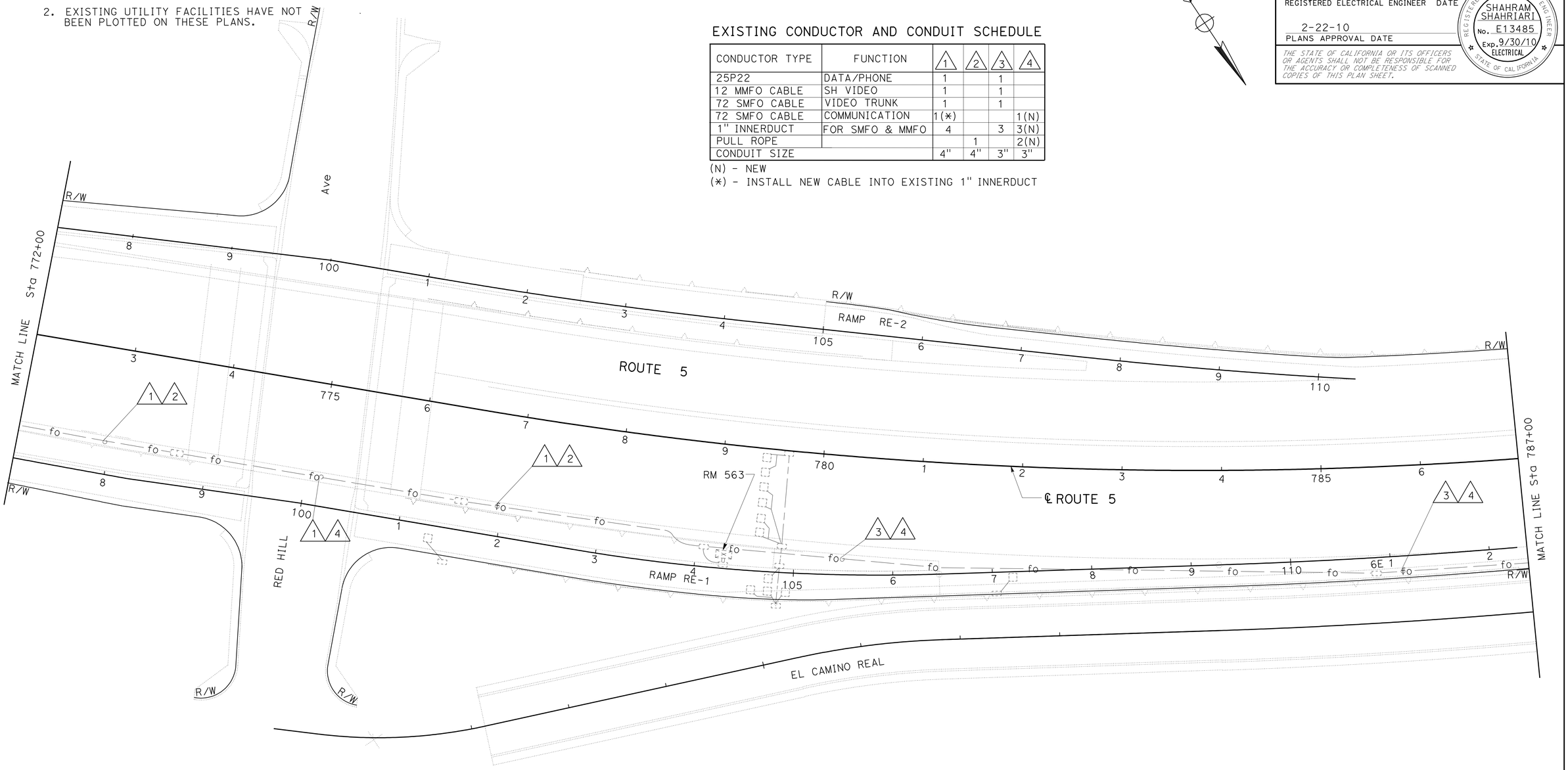


# COMMUNICATION SYSTEM

SCALE: 1" = 50'

E-23

THIS PLAN IS ACCURATE FOR ELECTRICAL WORK ONLY.

STATE OF CALIFORNIA - DEPARTMENT OF TRANSPORTATION
Caltrans
ELECTRICAL DESIGN

FUNCTIONAL SUPERVISOR: SHAHRAM SHAHRIARI
CALCULATED-DESIGNED BY: FRANCIS M. ALVIAR
CHECKED BY: VANESSA V. TRUONG
REVISED BY
DATE REVISED

LAST REVISION 12-21-09
DATE PLOTTED => 01-MAR-2010
TIME PLOTTED => 12:58

| Dist | COUNTY | ROUTE | POST MILES TOTAL PROJECT | SHEET No. | TOTAL SHEETS |
|---|---|---|---|---|---|
| 12 | Ora | 5 | 24.9/30.3 | 32 | 67 |

REGISTERED ELECTRICAL ENGINEER 12-28-09 DATE

2-22-10
PLANS APPROVAL DATE

REGISTERED PROFESSIONAL ENGINEER SHAHRAM SHAHRIARI No. E13485 Exp. 9/30/10 ELECTRICAL STATE OF CALIFORNIA

*THE STATE OF CALIFORNIA OR ITS OFFICERS OR AGENTS SHALL NOT BE RESPONSIBLE FOR THE ACCURACY OR COMPLETENESS OF SCANNED COPIES OF THIS PLAN SHEET.*

NOTE:

1. FOR COMPLETE RIGHT OF WAY AND ACCURATE ACCESS DATA, SEE RIGHT OF WAY RECORD MAPS AT DISTRICT OFFICE.
2. EXISTING UTILITY FACILITIES HAVE NOT BEEN PLOTTED ON THESE PLANS.

## EXISTING CONDUCTOR AND CONDUIT SCHEDULE

| CONDUCTOR TYPE | FUNCTION | 1 | 2 | 3 | 4 | 5 | 6 | 7 |
|---|---|---|---|---|---|---|---|---|
| 50P22 | DATA/PHONE | 1 | | | | | | |
| 12 MMFO CABLE | SH VIDEO | 1 | | | | | | |
| 72 SMFO CABLE | VIDEO TRUNK | 1 | | | | | | |
| 72 SMFO CABLE | COMMUNICATION | | 1(N) | | | | | |
| 8P22 | RM/CMS/CCTV | | | | | 1 | | 1 |
| 2 MMFO CABLE | SH VIDEO | | | | | 1 | | 1 |
| RG-6 A/U COAX | BB VIDEO | | | | 1 | 1 | | |
| 27C18 CABLE | CONTROL | | | | 1 | 1 | | |
| #8 | GROUND | | | 1 | 1 | 1 | 1 | |
| #6 | POWER | | | 2 | | | 2 | |
| 1" INNERDUCT | FOR SMFO & MMFO | 2 | 3(N) | | | | | |
| PULL ROPE | | | 2(N) | | | | | |
| CONDUIT SIZE | | 3" | 3" | 2" | 3" | 3" | 3" | 3" |

(N) - NEW

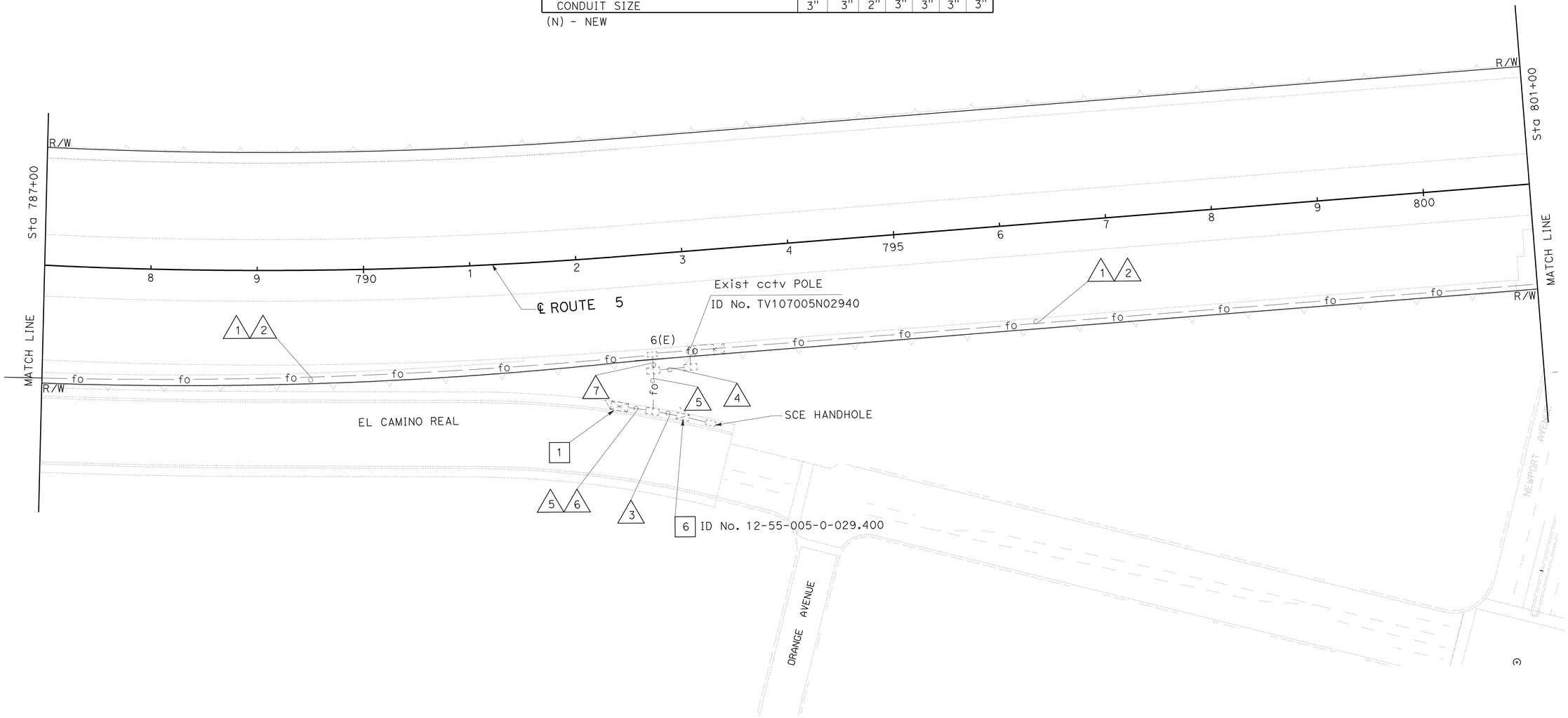


# COMMUNICATION SYSTEM

SCALE: 1" = 50'

**E-24**

THIS PLAN IS ACCURATE FOR ELECTRICAL WORK ONLY.

STATE OF CALIFORNIA - DEPARTMENT OF TRANSPORTATION
Caltrans® ELECTRICAL DESIGN

FUNCTIONAL SUPERVISOR: SHAHRAM SHAHRIARI
CALCULATED-DESIGNED BY: FRANCIS M. ALVIAR
CHECKED BY: VANESSA V. TRUONG
REVISED BY
DATE REVISED

LAST REVISION 11-25-09 | DATE PLOTTED => 01-MAR-2010 | TIME PLOTTED => 12:58

| Dist | COUNTY | ROUTE | POST MILES TOTAL PROJECT | SHEET No. | TOTAL SHEETS |
|---|---|---|---|---|---|
| 12 | Ora | 5 | 24.9/30.3 | 33 | 67 |

REGISTERED ELECTRICAL ENGINEER 12-28-09 DATE

2-22-10
PLANS APPROVAL DATE

REGISTERED PROFESSIONAL ENGINEER SHAHRAM SHAHRIARI No. E13485 Exp. 9/30/10 ELECTRICAL STATE OF CALIFORNIA

*THE STATE OF CALIFORNIA OR ITS OFFICERS OR AGENTS SHALL NOT BE RESPONSIBLE FOR THE ACCURACY OR COMPLETENESS OF SCANNED COPIES OF THIS PLAN SHEET.*

NOTE:

1. FOR ACCURATE RIGHT OF WAY AND ACCESS DATA, CONTACT RIGHT OF WAY ENGINEERING AT DISTRICT OFFICE.
2. EXISTING UTILITY FACILITIES HAVE NOT BEEN PLOTTED ON THESE PLANS.

## EXISTING CONDUCTOR AND CONDUIT SCHEDULE

| CONDUCTOR TYPE | FUNCTION | 1 | 2 |
|---|---|---|---|
| 50P22 | DATA/PHONE | 1 | |
| 12 MMFO CABLE | SH VIDEO | 1 | |
| 72 SMFO CABLE | VIDEO TRUNK | 1 | |
| 72 SMFO CABLE | COMMUNICATION | | 1(N) |
| 1" INNERDUCT | FOR SMFO & MMFO | 2 | 3(N) |
| PULL ROPE | | | 2(N) |
| CONDUIT SIZE | | 3" | 3" |

(N) - NEW

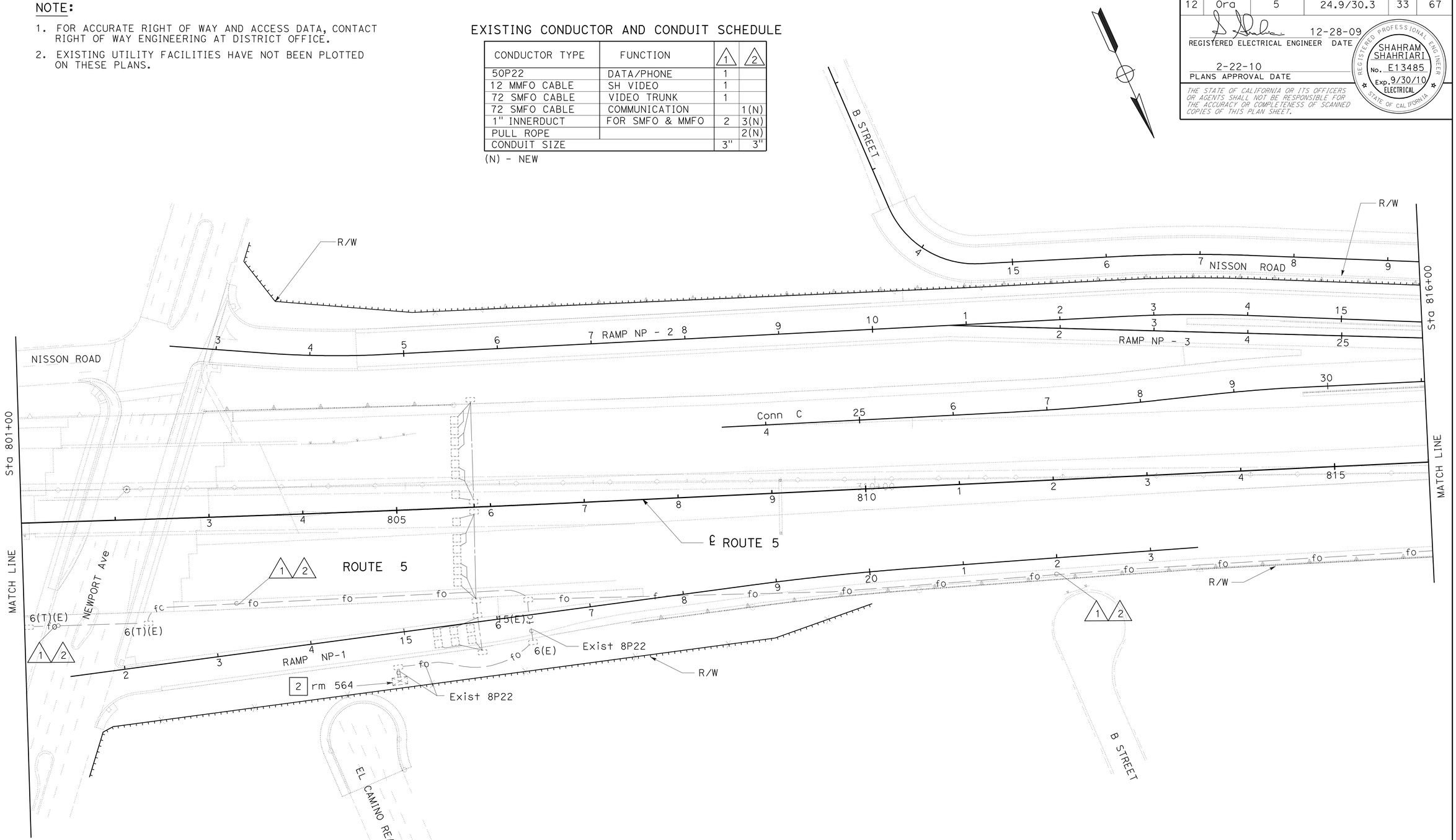


THIS PLAN IS ACCURATE FOR ELECTRICAL WORK ONLY.

# COMMUNICATION SYSTEM

SCALE: 1" = 50'

E-25

STATE OF CALIFORNIA - DEPARTMENT OF TRANSPORTATION
Caltrans® ELECTRICAL DESIGN

FUNCTIONAL SUPERVISOR: SHAHRAM SHAHRIARI
CALCULATED-DESIGNED BY: FRANCIS M. ALVIAR
CHECKED BY: VANESSA V. TRUONG
REVISED BY
DATE REVISED

LAST REVISION DATE PLOTTED => 01-MAR-2010
12-21-09 TIME PLOTTED => 12:58

| Dist | COUNTY | ROUTE | POST MILES TOTAL PROJECT | SHEET No. | TOTAL SHEETS |
|---|---|---|---|---|---|
| 12 | Ora | 5 | 24.9/30.3 | 34 | 67 |

REGISTERED ELECTRICAL ENGINEER 12-28-09 DATE

2-22-10
PLANS APPROVAL DATE

REGISTERED PROFESSIONAL ENGINEER SHAHRAM SHAHRIARI No. E13485 Exp. 9/30/10 ELECTRICAL STATE OF CALIFORNIA

*THE STATE OF CALIFORNIA OR ITS OFFICERS OR AGENTS SHALL NOT BE RESPONSIBLE FOR THE ACCURACY OR COMPLETENESS OF SCANNED COPIES OF THIS PLAN SHEET.*

NOTE:

1. FOR ACCURATE RIGHT OF WAY AND ACCESS DATA, CONTACT RIGHT OF WAY ENGINEERING AT DISTRICT OFFICE.
2. EXISTING UTILITY FACILITIES HAVE NOT BEEN PLOTTED ON THESE PLANS.

EXISTING CONDUCTOR AND CONDUIT SCHEDULE

| CONDUCTOR TYPE | FUNCTION | 1 | 2 | 3 |
|---|---|---|---|---|
| 50P22 | DATA/PHONE | 1 | | |
| 12 MMFO CABLE | SH VIDEO | 1 | | |
| 72 SMFO CABLE | VIDEO TRUNK | 1 | | |
| 72 SMFO CABLE | COMMUNICATION | | 1(N) | |
| 8P22 | RM/CMS/CCTV | | | 1 |
| 1" INNERDUCT | FOR SMFO & MMFO | 2 | 3(N) | |
| PULL ROPE | | | 2(N) | |
| CONDUIT SIZE | | 3" | 3" | 2" |

(N) - NEW

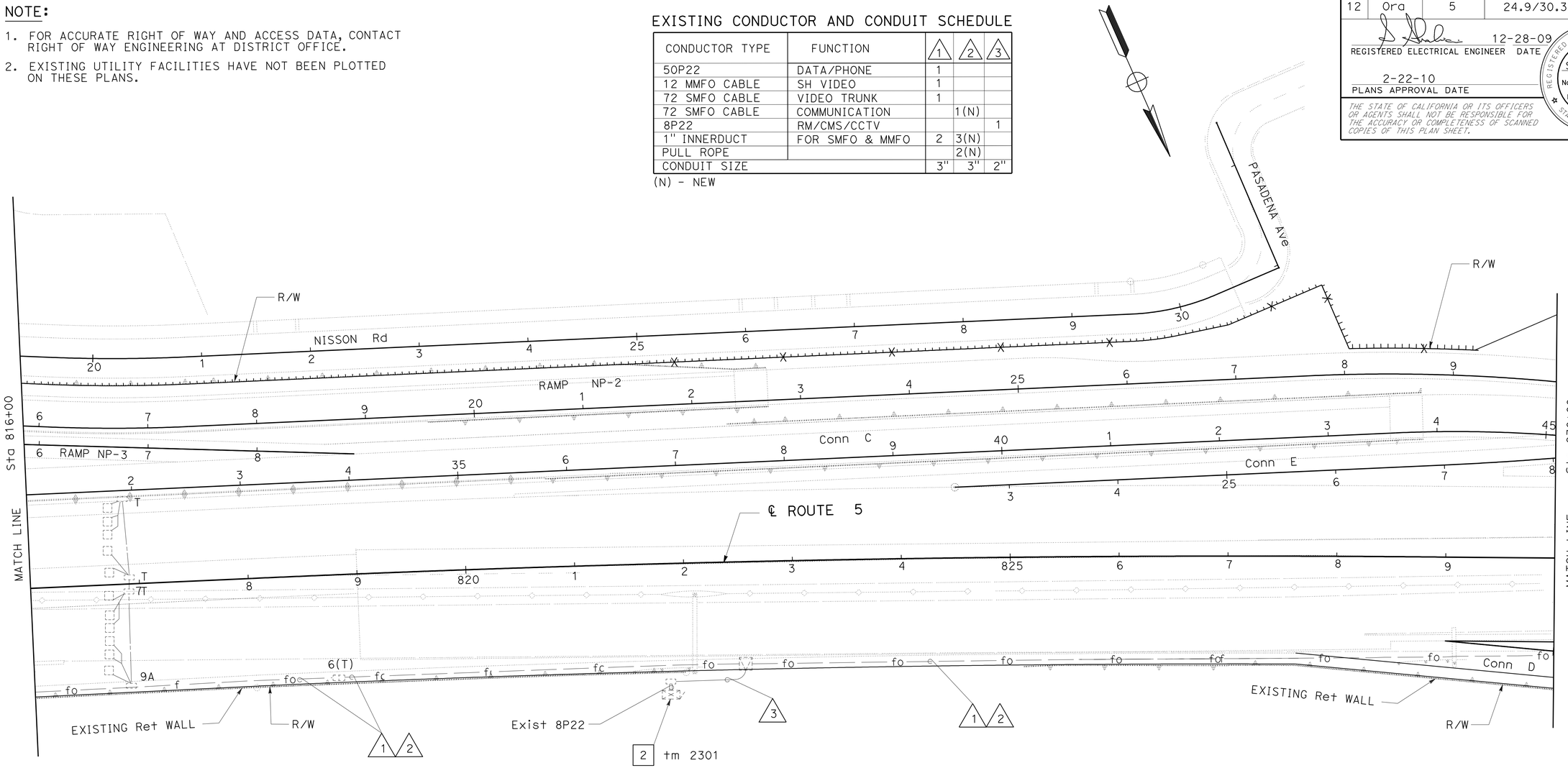


THIS PLAN IS ACCURATE FOR ELECTRICAL WORK ONLY.

# COMMUNICATION SYSTEM

SCALE: 1" = 50'

E-26

STATE OF CALIFORNIA - DEPARTMENT OF TRANSPORTATION
Caltrans ELECTRICAL DESIGN

FUNCTIONAL SUPERVISOR: SHAHRAM SHAHRIARI
CALCULATED-DESIGNED BY: FRANCIS M. ALVIAR
CHECKED BY: VANESSA V. TRUONG
REVISED BY / DATE REVISED

LAST REVISION 12-21-09 | DATE PLOTTED => 01-MAR-2010 | TIME PLOTTED => 12:58

BORDER LAST REVISED 4/11/2008 | RELATIVE BORDER SCALE IS IN INCHES 0 1 2 3 | USERNAME => trrichf | DGN FILE => c0k150ua026.dgn | CU 12390 | EA 0K1501

| Dist | COUNTY | ROUTE | POST MILES TOTAL PROJECT | SHEET No. | TOTAL SHEETS |
|---|---|---|---|---|---|
| 12 | Ora | 5 | 24.9/30.3 | 35 | 67 |

REGISTERED ELECTRICAL ENGINEER — DATE 12-28-09

2-22-10
PLANS APPROVAL DATE

REGISTERED PROFESSIONAL ENGINEER — SHAHRAM SHAHRIARI — No. E13485 — Exp. 9/30/10 — ELECTRICAL — STATE OF CALIFORNIA

*THE STATE OF CALIFORNIA OR ITS OFFICERS OR AGENTS SHALL NOT BE RESPONSIBLE FOR THE ACCURACY OR COMPLETENESS OF SCANNED COPIES OF THIS PLAN SHEET.*

NOTE:

1. FOR ACCURATE RIGHT OF WAY AND ACCESS DATA, CONTACT RIGHT OF WAY ENGINEERING AT DISTRICT OFFICE.
2. EXISTING UTILITY FACILITIES HAVE NOT BEEN PLOTTED ON THESE PLANS.

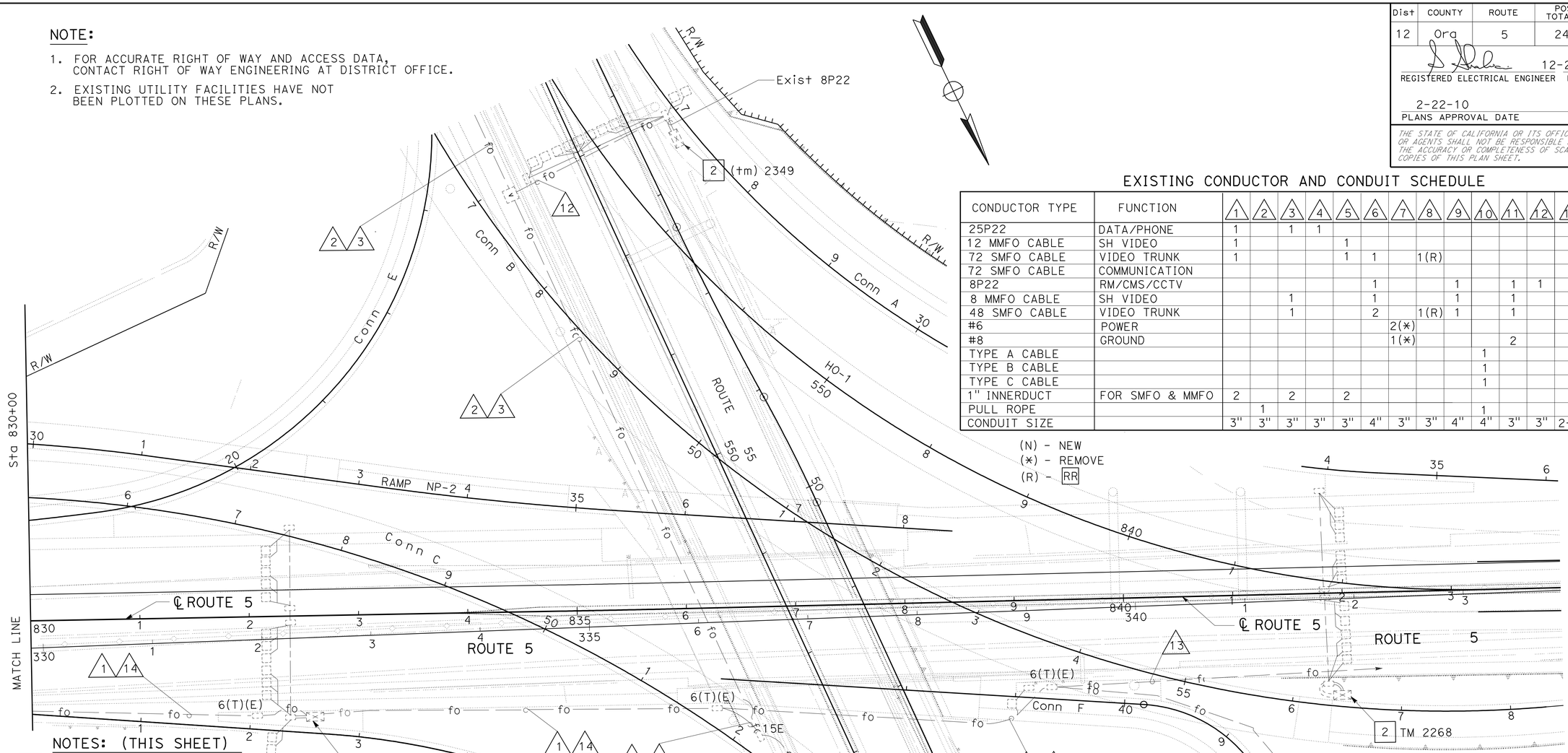


## EXISTING CONDUCTOR AND CONDUIT SCHEDULE

| CONDUCTOR TYPE | FUNCTION | 1 | 2 | 3 | 4 | 5 | 6 | 7 | 8 | 9 | 10 | 11 | 12 | 13 | 14 |
|---|---|---|---|---|---|---|---|---|---|---|---|---|---|---|---|
| 25P22 | DATA/PHONE | 1 | | 1 | 1 | | | | | | | | | | |
| 12 MMFO CABLE | SH VIDEO | 1 | | | | 1 | | | | | | | | | |
| 72 SMFO CABLE | VIDEO TRUNK | 1 | | | | 1 | 1 | | 1(R) | | | | | | |
| 72 SMFO CABLE | COMMUNICATION | | | | | | | | | | | | | | 1(N) |
| 8P22 | RM/CMS/CCTV | | | | | | 1 | | | 1 | | 1 | 1 | | |
| 8 MMFO CABLE | SH VIDEO | | | 1 | | | 1 | | | 1 | | 1 | | | |
| 48 SMFO CABLE | VIDEO TRUNK | | | 1 | | | 2 | | 1(R) | 1 | | 1 | | | |
| #6 | POWER | | | | | | | 2(*) | | | | | | | |
| #8 | GROUND | | | | | | | 1(*) | | | | 2 | | | |
| TYPE A CABLE | | | | | | | | | | | 1 | | | | |
| TYPE B CABLE | | | | | | | | | | | 1 | | | | |
| TYPE C CABLE | | | | | | | | | | | 1 | | | | |
| 1" INNERDUCT | FOR SMFO & MMFO | 2 | | 2 | | 2 | | | | | | | | | 3(N) |
| PULL ROPE | | | 1 | | | | | | | | 1 | | | 2 | 2(N) |
| CONDUIT SIZE | | 3" | 3" | 3" | 3" | 3" | 4" | 3" | 3" | 4" | 4" | 3" | 3" | 2-3" | 3" |

(N) - NEW
(*) - REMOVE
(R) - RR

## NOTES: (THIS SHEET)

A EXISTING TYPE III-BF SERVICE EQUIPMENT ENCLOSURE WITH 1-2P-125 A MAIN CB
1-1P-40 A FOR RAMP METERING
1-1P-15 A FOR TELEPHONE
1-1P-20 A FOR IRRIGATION
1-1P-40 A FOR TMS
1-1P-40 A FOR TMS
1-1P-20 A NOT LABELLED. REMOVE CIRCUIT BREAKER
ADD 1-2P-240 V-100 A FOR MINI HUB

B Exist 4"C, RR 5 SMFO PIGTAIL, RC 2#6
Exist 4"C, RR 12 SMFO, 72 SMFO, 72 SMFO, 48 SMFO
Exist 4"C, RR 48 SMFO
Exist 4"C, RR 72 SMFO, 36 SMFO

C Exist 2-4"C, RR 5 SMFO PIGTAILS, 72 SMFO, 12 SMFO, 72 SMFO 48 SMFO, 8 MMFO, 48 SMFO, 8P22, 72 SMFO

D Exist 2-3"C, RR 12 MMFO, 8 MMFO, 12 SMFO, 25P22
RR 2#6, 1#8 (GROUND), 50P22

E Exist 2-4"C, RR 5 SMFO PIGTAIL, 72 SMFO, 48 SMFO
RR 72 SMFO

F INSTALL 4"C, 4-1" INNERDUCT WITH TYPE A, B, C CABLES
4"C, 4-1" INNDERDUCT WITH 48 SMFO, 72 SMFO, 12 MMFO
4"C, 4-1" INNERDUCT WITH TYPE A, B, C CABLES
4"C, 4-1" INNERDUCT WITH 72 SMFO

G RC Exist MODEL 334 CABINET.
RL ALL EXISTING EQUIPMENT INSIDE MODEL 334 CABINET TO MINI HUB 3.

H PULL BOX SHALL HAVE "CALTRANS COMMUNICATION" MARKING ON THE STEEL COVER.

THIS PLAN IS ACCURATE FOR ELECTRICAL WORK ONLY.

# COMMUNICATION SYSTEM

SCALE: 1" = 50'

E-27

STATE OF CALIFORNIA - DEPARTMENT OF TRANSPORTATION
Caltrans® ELECTRICAL DESIGN

FUNCTIONAL SUPERVISOR: SHAHRAM SHAHRIARI
CALCULATED-DESIGNED BY: FRANCIS M. ALVIAR
CHECKED BY: VANESSA V. TRUONG
REVISED BY / DATE REVISED

LAST REVISION 12-21-09 DATE PLOTTED => 01-MAR-2010 TIME PLOTTED => 12:58

| Dist | COUNTY | ROUTE | POST MILES TOTAL PROJECT | SHEET No. | TOTAL SHEETS |
|---|---|---|---|---|---|
| 12 | Ora | 5 | 24.9/30.3 | 36 | 67 |

REGISTERED ELECTRICAL ENGINEER 12-28-09 DATE

2-22-10
PLANS APPROVAL DATE

REGISTERED PROFESSIONAL ENGINEER VIET NGO No. E18051 Exp. 6/30/11 ELECTRICAL STATE OF CALIFORNIA

*THE STATE OF CALIFORNIA OR ITS OFFICERS OR AGENTS SHALL NOT BE RESPONSIBLE FOR THE ACCURACY OR COMPLETENESS OF SCANNED COPIES OF THIS PLAN SHEET.*

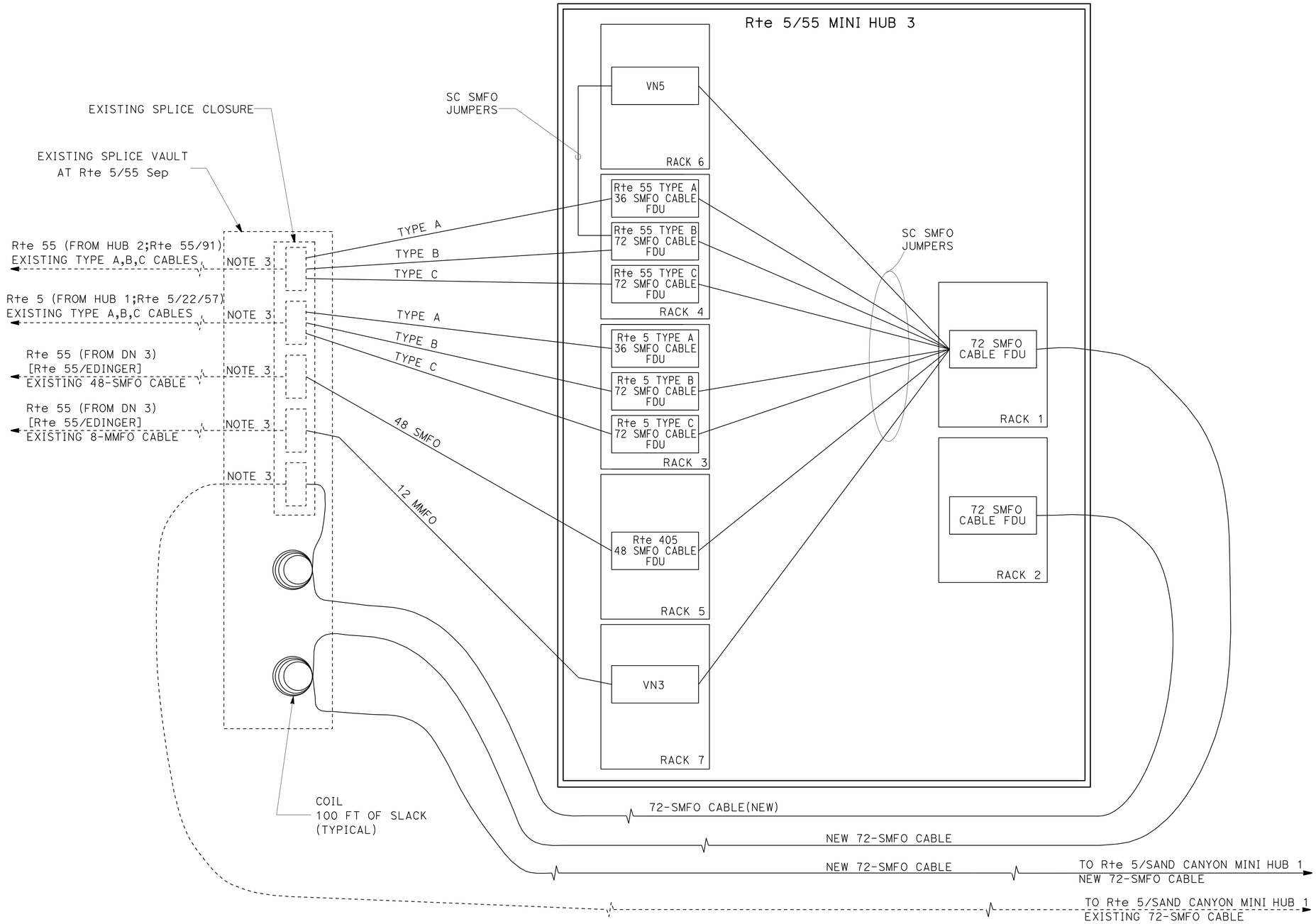


## LEGEND

TMC: Rte 5 NB AT SAND CANYON
HUB 1: Rte 5/22/57 Sep
HUB 2: Rte 55/91 Sep
MINI HUB 1: Rte 5 NB AT SAND CANYON
MINI HUB 3: Rte 5/55 Sep

DN3: Rte 55/EDINGER

VN3: VIDEO NODE 3 CABINET
VN5: VIDEO NODE 5 CABINET

SMFO: SINGLE MODE FIBER OPTIC CABLE
MMFO: MULTI-MODE FIBER OPTIC CABLE

TYPE A CABLE: 36 SMFO CABLE
TYPE B CABLE: 72 SMFO CABLE
TYPE C CABLE: 72 SMFO CABLE

## NOTES:

1. AT ROUTE 5/55 MINI HUB 3, PRIOR THE CUT-OVER PLAN, THE PROPOSED COMMUNICATION AND ELECTRICAL CONDUITS, CABLES AND EQUIPMENT SHALL BE INSTALLED AND TESTED.

2. THE CONTRACTOR SHALL PROVIDE A DETAIL CUT-OVER PLAN TO THE ENGINEER FOR APPROVAL AT LEAST 30 WORKING DAYS, PRIOR TO THE BEGINNING OF COMMUNINCATION SYSTEM CUT-OVER. THE CUT-OVER PLAN SHALL BE DESIGNED TO MINIMIZE THE DOWN TIME OF EACH CABLE TYPE. THE CONTRACTOR SHALL CO-ORDINATE ALL CUT-OVER ACTIVITY WITH THE ENGINEER.

3. THE CUT-OVER PLAN CONSISTS OF THE FOLLOWING STEPS:
   A. VERIFY THAT ALL EXISTING EQUIPMENT AND FIBER CABLES ARE AT WORKING CONDITION.
   B. VERIFY THAT ALL PROPOSED EQUIPMENT AND FIBER CABLES ARE AT WORKING CONDITION.
   C. ONLY ONE CABLE TYPE MAY BE CUT, SPLICED, LABELED AND TESTED FOR WORKING ONE AT THE TIME, BEFORE CONTINUE TO PERFORMING ON THE NEXT CABLE TYPE.
   D. FOR EACH CABLE TYPE, SPLICE FIBER TO FIBER.
   E. OTDR AND POWER METER TESTS SHALL BE USED TO VERIFY THE CONTINUITY ALL CABLES FROM DESIGNATED TEST LOCATIONS FDU'S TO Rte 5/SAND CANYON MINI HUB 1 FDU'S. BI-DIRECTIONAL TESTING SHALL BE REQUIRED FOR EACH CABLE TYPE.

THIS PLAN IS ACCURATE FOR ELECTRICAL WORK ONLY.

# COMMUNICATION SYSTEM DATA/VIDEO CONFIGURATION AT ROUTE 5/55 MINI HUB 3

NO SCALE

**E-28**

STATE OF CALIFORNIA - DEPARTMENT OF TRANSPORTATION
Caltrans ELECTRICAL SYSTEMS

FUNCTIONAL SUPERVISOR: HENRY PHAM
CALCULATED-DESIGNED BY: VIET NGO
CHECKED BY: HENRY PHAM
REVISED BY
DATE REVISED

LAST REVISION 12-10-09
DATE PLOTTED => 01-MAR-2010
TIME PLOTTED => 12:59

| Dist | COUNTY | ROUTE | POST MILES TOTAL PROJECT | SHEET No. | TOTAL SHEETS |
|---|---|---|---|---|---|
| 12 | Ora | 5 | 24.9/30.3 | 37 | 67 |

REGISTERED ELECTRICAL ENGINEER 12-28-09 DATE

2-22-10
PLANS APPROVAL DATE

REGISTERED PROFESSIONAL ENGINEER VIET NGO No. E18051 Exp. 6/30/11 ELECTRICAL STATE OF CALIFORNIA

*THE STATE OF CALIFORNIA OR ITS OFFICERS OR AGENTS SHALL NOT BE RESPONSIBLE FOR THE ACCURACY OR COMPLETENESS OF SCANNED COPIES OF THIS PLAN SHEET.*

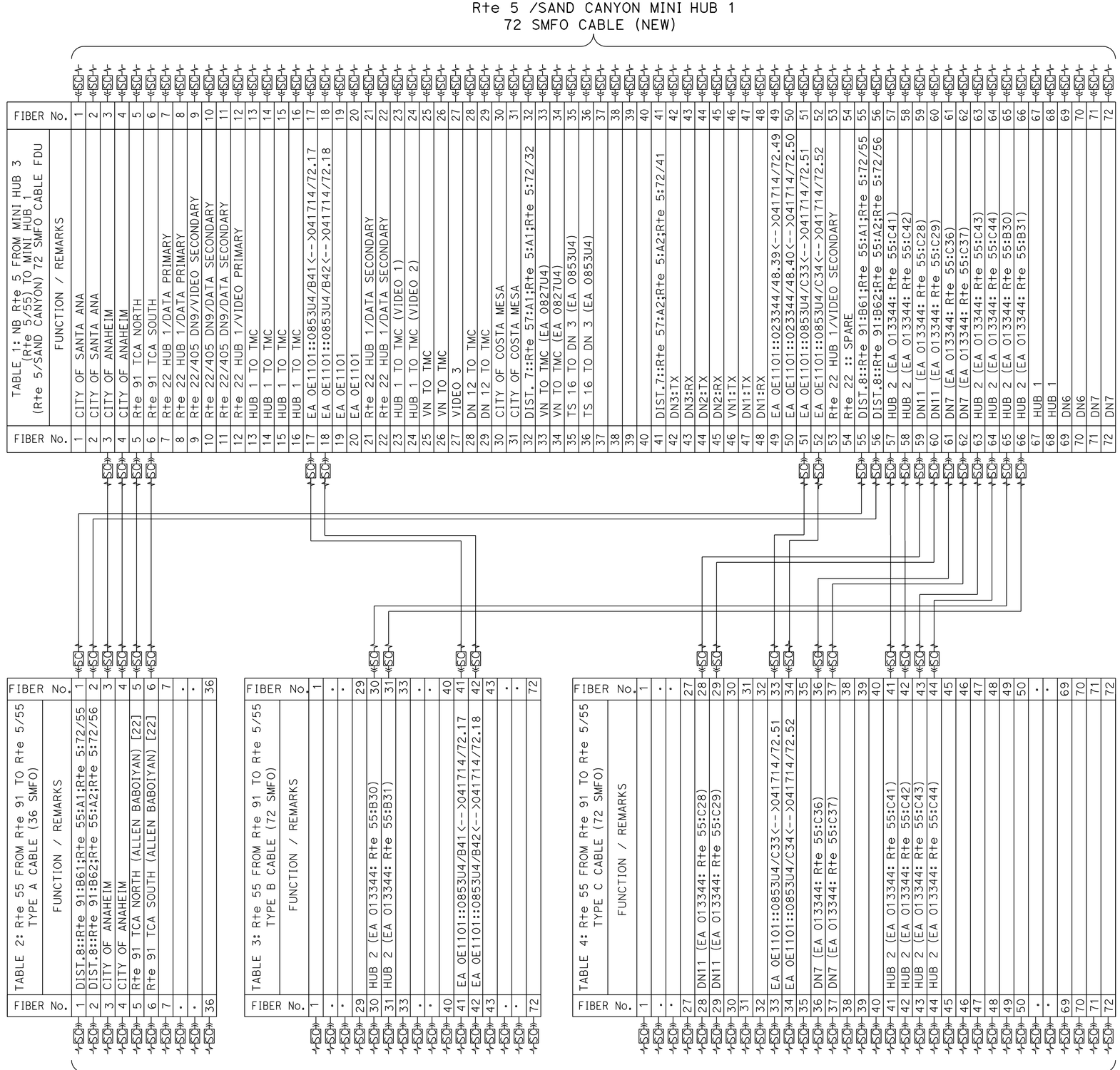


## NOTES AND LEGENDS

TMC: Rte 5 NB AT SAND CANYON

HUB 1: Rte 5/22/57 Sep
HUB 2: Rte 55/91 Sep
HUB 3: Rte 5 NB AT AVERY PARKWAY
HUB 4: Rte 405 NB AT EUCLID

MINI HUB 1: Rte 5 NB AT SAND CANYON
MINI HUB 2: Rte 22 WB AT VALLEY VIEW
MINI HUB 3: Rte 5/55 Sep

DN1: Rte 405/IRVINE CENTER Dr
DN2: Rte 405/JAMBOREE
DN3: Rte 55/EDINGER
DN4: Rte 5/ALICIA
DN5: Rte 5/YALE
DN6: Rte 91/BROOKHURST
DN7: Rte 5/LOARA
DN8: Rte 5/EL CAMINO REAL
DN9: Rte 22/405 Sep
DN10: Rte 57/IMPERIAL
DN11: Rte 55/CHAPMAN
DN12: Rte 55/19TH St

VN: VIDEO NODE

SMFO: SINGLE MODE FIBER OPTIC CABLE
MMFO: MULTI-MODE FIBER OPTIC CABLE

TYPE A CABLE: 36 SMFO CABLE
TYPE B CABLE: 72 SMFO CABLE
TYPE C CABLE: 72 SMFO CABLE

# COMMUNICATION SYSTEM FIBER ASSIGNMENT AT ROUTE 5/55 MINI HUB 3

NO SCALE

THIS PLAN IS ACCURATE FOR ELECTRICAL WORK ONLY.

**E-29**

STATE OF CALIFORNIA - DEPARTMENT OF TRANSPORTATION
Caltrans ELECTRICAL SYSTEMS

FUNCTIONAL SUPERVISOR: HENRY PHAM
CALCULATED-DESIGNED BY: VIET NGO
CHECKED BY: HENRY PHAM
REVISED BY
DATE REVISED

LAST REVISION 12-10-09
DATE PLOTTED => 01-MAR-2010
TIME PLOTTED => 12:59

| Dist | COUNTY | ROUTE | POST MILES TOTAL PROJECT | SHEET No. | TOTAL SHEETS |
|---|---|---|---|---|---|
| 12 | Ora | 5 | 24.9/30.3 | 38 | 67 |

REGISTERED ELECTRICAL ENGINEER 12-28-09 DATE

2-22-10
PLANS APPROVAL DATE

REGISTERED PROFESSIONAL ENGINEER VIET NGO No. E18051 Exp. 6/30/11 ELECTRICAL STATE OF CALIFORNIA

*THE STATE OF CALIFORNIA OR ITS OFFICERS OR AGENTS SHALL NOT BE RESPONSIBLE FOR THE ACCURACY OR COMPLETENESS OF SCANNED COPIES OF THIS PLAN SHEET.*

Rte 5 /SAND CANYON MINI HUB 1
72 SMFO CABLE (NEW)

TABLE 1: NB Rte 5 FROM MINI HUB 3 (Rte 5/55) TO MINI HUB 1 (Rte 5/SAND CANYON) 72 SMFO CABLE FDU

| FIBER No. | FUNCTION / REMARKS |
|---|---|
| 1 | CITY OF SANTA ANA |
| 2 | CITY OF SANTA ANA |
| 3 | CITY OF ANAHEIM |
| 4 | CITY OF ANAHEIM |
| 5 | Rte 91 TCA NORTH |
| 6 | Rte 91 TCA SOUTH |
| 7 | Rte 22 HUB 1/DATA PRIMARY |
| 8 | Rte 22 HUB 1/DATA PRIMARY |
| 9 | Rte 22/405 DN9/VIDEO SECONDARY |
| 10 | Rte 22/405 DN9/DATA SECONDARY |
| 11 | Rte 22/405 DN9/DATA SECONDARY |
| 12 | Rte 22 HUB 1/VIDEO PRIMARY |
| 13 | HUB 1 TO TMC |
| 14 | HUB 1 TO TMC |
| 15 | HUB 1 TO TMC |
| 16 | HUB 1 TO TMC |
| 17 | EA OE1101::0853U4/B41<-->041714/72.17 |
| 18 | EA OE1101::0853U4/B42<-->041714/72.18 |
| 19 | EA OE1101 |
| 20 | EA OE1101 |
| 21 | Rte 22 HUB 1/DATA SECONDARY |
| 22 | Rte 22 HUB 1/DATA SECONDARY |
| 23 | HUB 1 TO TMC (VIDEO 1) |
| 24 | HUB 1 TO TMC (VIDEO 2) |
| 25 | VN TO TMC |
| 26 | VN TO TMC |
| 27 | VIDEO 3 |
| 28 | DN 12 TO TMC |
| 29 | DN 12 TO TMC |
| 30 | CITY OF COSTA MESA |
| 31 | CITY OF COSTA MESA |
| 32 | DIST. 7::Rte 57:A1;Rte 5:A1;Rte 5:72/32 |
| 33 | VN TO TMC (EA 082TU4) |
| 34 | VN TO TMC (EA 082TU4) |
| 35 | TS 16 TO DN 3 (EA 0853U4) |
| 36 | TS 16 TO DN 3 (EA 0853U4) |
| 37 | |
| 38 | |
| 39 | |
| 40 | |
| 41 | DIST.7::Rte 57:A2;Rte 5:A2;Rte 5:72/41 |
| 42 | DN3:TX |
| 43 | DN3:RX |
| 44 | DN2:TX |
| 45 | DN2:RX |
| 46 | VN1:TX |
| 47 | DN1:TX |
| 48 | DN1:RX |
| 49 | EA OE1101::023344/48.39<-->041714/72.49 |
| 50 | EA OE1101::023344/48.40<-->041714/72.50 |
| 51 | EA OE1101::0853U4/C33<-->041714/72.51 |
| 52 | EA OE1101::0853U4/C34<-->041714/72.52 |
| 53 | Rte 22 HUB 1/VIDEO SECONDARY |
| 54 | Rte 22 :: SPARE |
| 55 | DIST.8::Rte 91:B61;Rte 55:A1;Rte 5:72/55 |
| 56 | DIST.8::Rte 91:B62;Rte 55:A2;Rte 5:72/56 |
| 57 | HUB 2 (EA 013344: Rte 55:C41) |
| 58 | HUB 2 (EA 013344: Rte 55:C42) |
| 59 | DN11 (EA 013344: Rte 55:C28) |
| 60 | DN11 (EA 013344: Rte 55:C29) |
| 61 | DN7 (EA 013344: Rte 55:C36) |
| 62 | DN7 (EA 013344: Rte 55:C37) |
| 63 | HUB 2 (EA 013344: Rte 55:C43) |
| 64 | HUB 2 (EA 013344: Rte 55:C44) |
| 65 | HUB 2 (EA 013344: Rte 55:B30) |
| 66 | HUB 2 (EA 013344: Rte 55:B31) |
| 67 | HUB 1 |
| 68 | HUB 1 |
| 69 | DN6 |
| 70 | DN6 |
| 71 | DN7 |
| 72 | DN7 |

TABLE 2: Rte 55 FROM Rte 405 TO Rte 5/55 48 SMFO CABLE FDU

| FIBER No. | FUNCTION / REMARKS |
|---|---|
| 1 | CITY OF SANTA ANA |
| 2 | CITY OF SANTA ANA |
| 3 | |
| 4 | |
| 5 | |
| 6 | |
| 7 | |
| 8 | |
| 9 | |
| 10 | |
| 11 | |
| 12 | |
| 13 | |
| 14 | |
| 15 | |
| 16 | |
| 17 | |
| 18 | |
| 19 | |
| 20 | |
| 21 | |
| 22 | |
| 23 | |
| 24 | |
| 25 | |
| 26 | |
| 27 | VOICE |
| 28 | DN12 TO TMC |
| 29 | DN12 TO TMC |
| 30 | CITY OF COSTA MESA |
| 31 | CITY OF COSTA MESA |
| 32 | |
| 33 | VN TO TMC |
| 34 | VN TO TMC |
| 35 | TS 16 TO DN 3 (EA 0853U4) |
| 36 | TS 16 TO DN 3 (EA 0853U4) |
| 37 | CCR 16 TO DN 3 (EA 0853U4) |
| 38 | CCR 16 TO DN 3 (EA 0853U4) |
| 39 | TO FIBER # 39, TABLE 4, E-31 |
| 40 | TO FIBER # 40, TABLE 4, E-31 |
| 41 | |
| 42 | DN3:TX |
| 43 | DN3:RX |
| 44 | DN2:TX |
| 45 | DN2:RX |
| 46 | VN1:TX |
| 47 | DN1:TX |
| 48 | DN1:RX |

Rte 55 FROM Rte 405
48 SMFO CABLE

## NOTES AND LEGENDS

TMC: Rte 5 NB AT SAND CANYON

HUB 1: Rte 5/22/57 Sep
HUB 2: Rte 55/91 Sep
HUB 3: Rte 5 NB AT AVERY PARKWAY
HUB 4: Rte 405 NB AT EUCLID

MINI HUB 1: Rte 5 NB AT SAND CANYON
MINI HUB 2: Rte 22 WB AT VALLEY VIEW
MINI HUB 3: Rte 5/55 Sep

DN1: Rte 405/IRVINE CENTER Dr
DN2: Rte 405/JAMBOREE
DN3: Rte 55/EDINGER
DN4: Rte 5/ALICIA
DN5: Rte 5/YALE
DN6: Rte 91/BROOKHURST
DN7: Rte 5/LOARA
DN8: Rte 5/EL CAMINO REAL
DN9: Rte 22/405 Sep
DN10: Rte 57/IMPERIAL
DN11: Rte 55/CHAPMAN
DN12: Rte 55/19TH St

VN: VIDEO NODE

SMFO: SINGLE MODE FIBER OPTIC CABLE
MMFO: MULTI-MODE FIBER OPTIC CABLE

TYPE A CABLE: 36 SMFO CABLE
TYPE B CABLE: 72 SMFO CABLE
TYPE C CABLE: 72 SMFO CABLE

THIS PLAN IS ACCURATE FOR ELECTRICAL WORK ONLY.

# COMMUNICATION SYSTEM FIBER ASSIGNMENT AT ROUTE 5/55 MINI HUB 3

NO SCALE

**E-30**

| | |
|---|---|
| CALCULATED-DESIGNED BY | VIET NGO |
| CHECKED BY | HENRY PHAM |
| FUNCTIONAL SUPERVISOR | HENRY PHAM |
| REVISED BY | |
| DATE REVISED | |

STATE OF CALIFORNIA - DEPARTMENT OF TRANSPORTATION
Caltrans ELECTRICAL SYSTEMS

LAST REVISION 12-10-09 | DATE PLOTTED => 01-MAR-2010 | TIME PLOTTED => 12:59

| Dist | COUNTY | ROUTE | POST MILES TOTAL PROJECT | SHEET No. | TOTAL SHEETS |
|---|---|---|---|---|---|
| 12 | Ora | 5 | 24.9/30.3 | 39 | 67 |

REGISTERED ELECTRICAL ENGINEER 12-28-09 DATE

2-22-10
PLANS APPROVAL DATE

REGISTERED PROFESSIONAL ENGINEER VIET NGO No. E18051 Exp. 6/30/11 ELECTRICAL STATE OF CALIFORNIA

*THE STATE OF CALIFORNIA OR ITS OFFICERS OR AGENTS SHALL NOT BE RESPONSIBLE FOR THE ACCURACY OR COMPLETENESS OF SCANNED COPIES OF THIS PLAN SHEET.*

# Rte 5 /SAND CANYON MINI HUB 1
## 72 SMFO CABLE (NEW)

TABLE 1: NB Rte 5 FROM MINI HUB 3 (Rte 5/SAND CANYON) TO MINI HUB 1 72 SMFO CABLE FDU

| FIBER No. | FUNCTION / REMARKS |
|---|---|
| 1 | CITY OF SANTA ANA |
| 2 | CITY OF SANTA ANA |
| 3 | CITY OF ANAHEIM |
| 4 | CITY OF ANAHEIM |
| 5 | Rte 91 TCA NORTH |
| 6 | Rte 91 TCA SOUTH |
| 7 | Rte 22 HUB 1/DATA PRIMARY |
| 8 | Rte 22 HUB 1/DATA PRIMARY |
| 9 | Rte 22/405 DN9/VIDEO SECONDARY |
| 10 | Rte 22/405 DN9/DATA SECONDARY |
| 11 | Rte 22/405 DN9/DATA SECONDARY |
| 12 | Rte 22 HUB 1/VIDEO PRIMARY |
| 13 | HUB 1 TO TMC |
| 14 | HUB 1 TO TMC |
| 15 | HUB 1 TO TMC |
| 16 | HUB 1 TO TMC |
| 17 | EA OE1101::0853U4/B41<-->041714/72.17 |
| 18 | EA OE1101::0853U4/B42<-->041714/72.18 |
| 19 | EA OE1101 |
| 20 | EA OE1101 |
| 21 | Rte 22 HUB 1/DATA SECONDARY |
| 22 | Rte 22 HUB 1/DATA SECONDARY |
| 23 | HUB 1 TO TMC (VIDEO 1) |
| 24 | HUB 1 TO TMC (VIDEO 2) |
| 25 | VN TO TMC |
| 26 | VN TO TMC |
| 27 | VIDEO 3 |
| 28 | DN 12 TO TMC |
| 29 | DN 12 TO TMC |
| 30 | CITY OF COSTA MESA |
| 31 | CITY OF COSTA MESA |
| 32 | DIST. 7::Rte 57:A1;Rte 5:A1;Rte 5:72/32 |
| 33 | VN TO TMC (EA 0827U4) |
| 34 | VN TO TMC (EA 0827U4) |
| 35 | TS 16 TO DN 3 (EA 0853U4) |
| 36 | TS 16 TO DN 3 (EA 0853U4) |
| 37 | |
| 38 | |
| 39 | |
| 40 | |
| 41 | DIST.7::Rte 57:A2;Rte 5:A2;Rte 5:72/41 |
| 42 | DN3:TX |
| 43 | DN3:RX |
| 44 | DN2:TX |
| 45 | DN2:RX |
| 46 | VN1:TX |
| 47 | DN1:TX |
| 48 | DN1:RX |
| 49 | EA OE1101::023344/48.39<-->041714/72.49 |
| 50 | EA OE1101::023344/48.40<-->041714/72.50 |
| 51 | EA OE1101::0853U4/C33<-->041714/72.51 |
| 52 | EA OE1101::0853U4/C34<-->041714/72.52 |
| 53 | Rte 22 HUB 1/VIDEO SECONDARY |
| 54 | Rte 22 :: SPARE |
| 55 | DIST.8::Rte 91:B61;Rte 55:A1;Rte 5:72/55 |
| 56 | DIST.8::Rte 91:B62;Rte 55:A2;Rte 5:72/56 |
| 57 | HUB 2 (EA 013344: Rte 55:C41) |
| 58 | HUB 2 (EA 013344: Rte 55:C42) |
| 59 | DN11 (EA 013344: Rte 55:C28) |
| 60 | DN11 (EA 013344: Rte 55:C29) |
| 61 | DN7 (EA 013344: Rte 55:C36) |
| 62 | DN7 (EA 013344: Rte 55:C37) |
| 63 | HUB 2 (EA 013344: Rte 55:C43) |
| 64 | HUB 2 (EA 013344: Rte 55:C44) |
| 65 | HUB 2 (EA 013344: Rte 55:B30) |
| 66 | HUB 2 (EA 013344: Rte 55:B31) |
| 67 | HUB 1 |
| 68 | HUB 1 |
| 69 | DN6 |
| 70 | DN6 |
| 71 | DN7 |
| 72 | DN7 |

TABLE 2: Rte 5 FROM Rte 5/22/57 TO Rte 5/55 TYPE A CABLE (36 SMFO) FDU

| FIBER No. | FUNCTION / REMARKS |
|---|---|
| 1 | DIST.7::Rte 57:A1;Rte 5:A1;Rte 5:72/32 |
| 2 | DIST.7::Rte 57:A2;Rte 5:A2;Rte 5:72/41 |
| . | |
| . | |
| . | |
| 36 | |

TABLE 3: Rte 5 FROM Rte 5/22/57 TO Rte 5/55 TYPE B CABLE (72 SMFO) FDU

| FIBER No. | FUNCTION / REMARKS |
|---|---|
| 1 | |
| . | |
| . | |
| . | |
| 7 | |
| 8 | HUB 1 TO TMC (VIDEO 1) [3] [9] |
| 9 | HUB 1 TO TMC (VIDEO 2) [3] [9] |
| 10 | |
| . | |
| 33 | VIDEO 3 [2] [3] |
| . | |
| 70 | VIDEO (LA VETA SECONDARY) |
| 71 | Rte 22/405 DN9/VIDEO SECONDARY-Rte 5/72.12 |
| 72 | Rte 22 HUB 1/VIDEO PRIMARY-Rte 5/72.9 |

TABLE 4: Rte 5 FROM Rte 5/22/57 TO Rte 5/55 TYPE C CABLE (72 SMFO) FDU

| FIBER No. | FUNCTION / REMARKS |
|---|---|
| 1 | |
| . | |
| . | |
| . | |
| 27 | |
| 28 | H1 TO TMC |
| 29 | H1 TO TMC |
| 30 | DN6 TO TMC |
| 31 | DN6 TO TMC |
| 32 | DN7 TO TMC |
| 33 | DN7 TO TMC |
| 34 | CH1 TO TMC (Rte 57: DN10) [3] [9] |
| 35 | H1 TO TMC (Rte 57: DN10) [3] [9] |
| 36 | H1 TO TMC (Rte 57: H1) [3] [9] |
| 37 | H1 TO TMC (Rte 57: H1) [3] [9] |
| 38 | TO FIBER # 39, TABLE 2, E-30 |
| 39 | TO FIBER # 40, TABLE 2, E-30 |
| 40 | EA OE1101::023344/48.39<-->041714/72.49 |
| 41 | EA OE1101::023344/48.40<-->041714/72.50 |
| 42 | |
| . | |
| . | |
| 59 | |
| 60 | Rte 22 HUB 1/DATA SECONDARY |
| 61 | Rte 22/405 DN9/DATA SECONDARY-Rte 5/72.10 |
| 62 | Rte 22/405 DN9/DATA SECONDARY-Rte 5/72.11 |
| 63 | Rte 22 HUB 1/DATA PRIMARY -Rte 5/72.7 |
| 64 | Rte 22 HUB 1/DATA PRIMARY-Rte 5/72.8 |
| 65 | Rte 22 :: SPARE |
| 66 | Rte 22 HUB 1/DATA SECONDARY |
| 67 | |
| . | |
| . | |
| 72 | |

Rte 5 FROM Rte 5/22/57 IC TYPE A,B,C CABLES

THIS PLAN IS ACCURATE FOR ELECTRICAL WORK ONLY.

## NOTES AND LEGENDS

TMC: Rte 5 NB AT SAND CANYON

HUB 1: Rte 5/22/57 Sep
HUB 2: Rte 55/91 Sep
HUB 3: Rte 5 NB AT AVERY PARKWAY
HUB 4: Rte 405 NB AT EUCLID

MINI HUB 1: Rte 5 NB AT SAND CANYON
MINI HUB 2: Rte 22 WB AT VALLEY VIEW
MINI HUB 3: 5/55 Sep

DN1: Rte 405/IRVINE CENTER Dr
DN2: Rte 405/JAMBOREE
DN3: Rte 55/EDINGER
DN4: Rte 5/ALICIA
DN5: Rte 5/YALE
DN6: Rte 91/BROOKHURST
DN7: Rte 5/LOARA
DN8: Rte 5/EL CAMINO REAL
DN9: Rte 22/405 Sep
DN10: Rte 57/IMPERIAL
DN11: Rte 55/CHAPMAN
DN12: Rte 55/19TH St

VN: VIDEO NODE

SMFO: SINGLE MODE FIBER OPTIC CABLE
MMFO: MULTI-MODE FIBER OPTIC CABLE

TYPE A CABLE: 36 SMFO CABLE
TYPE B CABLE: 72 SMFO CABLE
TYPE C CABLE: 72 SMFO CABLE

# COMMUNICATION SYSTEM FIBER ASSIGNMENT AT ROUTE 5/55 MINI HUB 3

NO SCALE

**E-31**

| | | | |
|---|---|---|---|
| CALCULATED-DESIGNED BY | VIET NGO | REVISED BY | |
| CHECKED BY | HENRY PHAM | DATE REVISED | |
| FUNCTIONAL SUPERVISOR | HENRY PHAM | | |

STATE OF CALIFORNIA - DEPARTMENT OF TRANSPORTATION
Caltrans® ELECTRICAL SYSTEMS

LAST REVISION 11-30-09 | DATE PLOTTED => 01-MAR-2010 | TIME PLOTTED => 12:59

| Dist | COUNTY | ROUTE | POST MILES TOTAL PROJECT | SHEET No. | TOTAL SHEETS |
|---|---|---|---|---|---|
| 12 | Ora | 5 | 24.9/30.3 | 40 | 67 |

REGISTERED ELECTRICAL ENGINEER 12-28-09 DATE

2-22-10
PLANS APPROVAL DATE

REGISTERED PROFESSIONAL ENGINEER VIET NGO No. E18051 Exp. 6/30/11 ELECTRICAL STATE OF CALIFORNIA

*THE STATE OF CALIFORNIA OR ITS OFFICERS OR AGENTS SHALL NOT BE RESPONSIBLE FOR THE ACCURACY OR COMPLETENESS OF SCANNED COPIES OF THIS PLAN SHEET.*

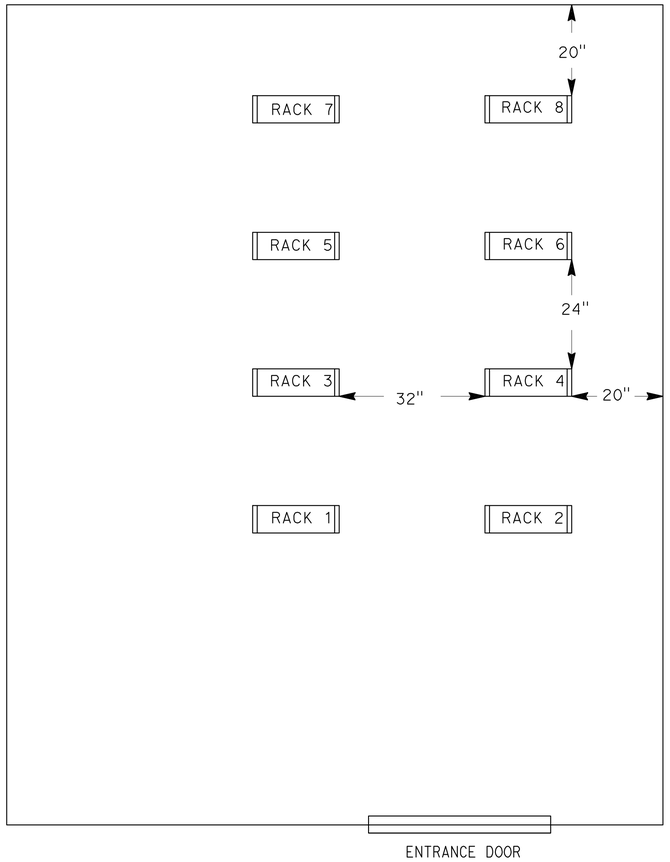


Rte 5/55 MINI HUB 3 FDU RACK LAY OUT

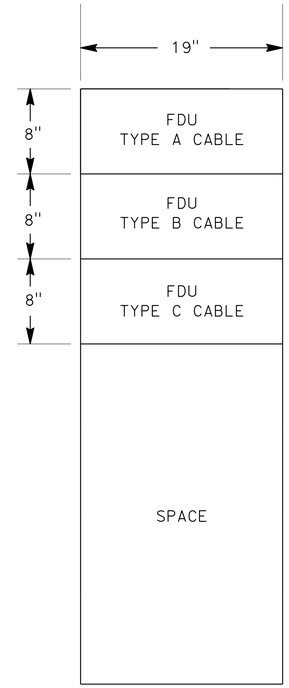


FDU RACK DETAIL
(TYPICAL)

## NOTES

RACK 1: NEW 72 SMFO CABLE
RACK 2: NEW-EXISTING 72 SMFO CABLE
RACK 3: Rte 5 (A,B,C TYPE)
RACK 4: Rte 55 (A,B,C TYPE)
RACK 5: Rte 55 (48 SMFO)
RACK 6: Rte 55 VN5
RACK 7: Rte 55 (12 MMFO & VN3)
RACK 8: FUTURE

VN3: VIDEO NODE 3 CABINET
VN5: VIDEO NODE 5 CABINET

SMFO: SINGLE MODE FIBER OPTIC CABLE
MMFO: MULTI-MODE FIBER OPTIC CABLE

TYPE A CABLE: 36 SMFO CABLE
TYPE B CABLE: 72 SMFO CABLE
TYPE C CABLE: 72 SMFO CABLE

## NOTES

1. ROUTE 55, DURING THE CUT-OVER ON 8-MMFO AND 12-MMFO CABLES, ALL VIDEO NODE 3 (VN3) EQUIPMENT, FIBER JUMPERS, CABLES AND WIRINGS SHALL BE RELOCATED TO RACK 7 OF Rte 5/55 MINI HUB 3, AS SHOWN ON PLAN.
2. ROUTE 55, DURING THE CUT-OVER ON TYPE B CABLE, ALL VIDEO NODE 5 (VN5) EQUIPMENT, FIBER JUMPERS, CABLES AND WIRINGS SHALL BE RELOCATED TO RACK 6 OF Rte 5/55 MINI HUB 3, AS SHOWN ON PLAN.
3. CCTV FUNCTIONAL AND PERFORMANCE TESTS SHALL BE CONDUCTED TO MAINTAIN THE CAMERA INTEGRITY.
4. ALL EQUIPMENT, FIBER JUMPERS, CABLES AND WIRINGS SHALL BE LABELED.

THIS PLAN IS ACCURATE FOR ELECTRICAL WORK ONLY.

# COMMUNICATION SYSTEM MIMI HUB 3 AT ROUTE 5/55 Sep

NO SCALE

E-32

STATE OF CALIFORNIA - DEPARTMENT OF TRANSPORTATION
Caltrans ELECTRICAL SYSTEMS

FUNCTIONAL SUPERVISOR: HENRY PHAM
CALCULATED-DESIGNED BY: VIET NGO
CHECKED BY: HENRY PHAM
REVISED BY
DATE REVISED

LAST REVISION 12-10-09 | DATE PLOTTED => 01-MAR-2010 | TIME PLOTTED => 12:59

| Dist | COUNTY | ROUTE | POST MILES TOTAL PROJECT | SHEET No. | TOTAL SHEETS |
|---|---|---|---|---|---|
| 12 | Ora | 5 | 24.9/30.3 | 41 | 67 |

REGISTERED ELECTRICAL ENGINEER 12-28-09 DATE

2-22-10
PLANS APPROVAL DATE

REGISTERED PROFESSIONAL ENGINEER VIET NGO No. E18051 Exp. 6/30/11 ELECTRICAL STATE OF CALIFORNIA

*THE STATE OF CALIFORNIA OR ITS OFFICERS OR AGENTS SHALL NOT BE RESPONSIBLE FOR THE ACCURACY OR COMPLETENESS OF SCANNED COPIES OF THIS PLAN SHEET.*

TABLE 1: DATA LINK TEST LOCATIONS (FDU BI-DIRECTION):

ROUTE 5 SB: BETWEEN MINI HUB 1 AND MINI HUB 3.
ROUTE 5 NB: BETWEEN HUB 1 AND MINI HUB 3.
ROUTE 55 NB: BETWEEN HUB 2 AND MINI HUB 3.
ROUTE 55 SB: BETWEEN DATA NODE 3 AND MINI HUB 3.
ROUTE 55 SB: BETWEEN CN 405/55 AND MINI HUB 3.

TABLE 2: VIDEO TEST LOCATIONS (FOR VN3 AND VN5 CABINETS)

TEST BEFORE AND AFTER CUT-OVER.
Rte 5 SB: CCTV # 106,197,107.
Rte 55 SB: CCTV # 22,21,20,23,24.
Rte 55 NB: CCTV # 200,201,202,204,205,19,230 AND CCR16.

VIDEO NODE 3 (VN3) Rte 55 SB 8-MMFO CABLE FIBER ASSIGNMENT

| FIBER No. | REMARKS |
|---|---|
| 1 | CCTV 22 |
| 2 | CCTV 21 |
| 3 | CCTV 20 |
| 4 | Not Used |
| 5 | CCTV 23 |
| 6 | CCTV 24 |
| 7 | Not Used |
| 8 | Not Used |

VIDEO NODE 3 (VN3) Rte 5 SB 12-MMFO CABLE FIBER ASSIGNMENT

| FIBER No. | REMARKS |
|---|---|
| 1 | Other |
| 2 | Other |
| 3 | Other |
| 4 | Other |
| 5 | CCTV 106 |
| 6 | CCTV 197 |
| 7 | CCTV 107 |
| 8 | Not Used |
| 9 | Not Used |
| 10 | Not Used |
| 11 | Not Used |
| 12 | Not Used |

VIDEO NODE 5 (VN5) Rte 55 NB TYPE B (72 SMFO) CABLE FIBER ASSIGNMENT

| FIBER No. | REMARKS |
|---|---|
| 1 | CCTV 198 |
| 2 | CCTV 199 |
| 3 | CCTV 200 |
| 4 | CCTV 201 |
| 5 | CCTV 202 |
| 6 | CCTV 204 |
| 7 | CCTV 205 |
| 8 | Not Used |
| 9 | CCTV 19 |
| 10 | CCTV 230 |
| 11-36 | Not Used |
| 37 | CCR 16 |
| 38 | CCR 16 |
| 39-72 | Not Used |

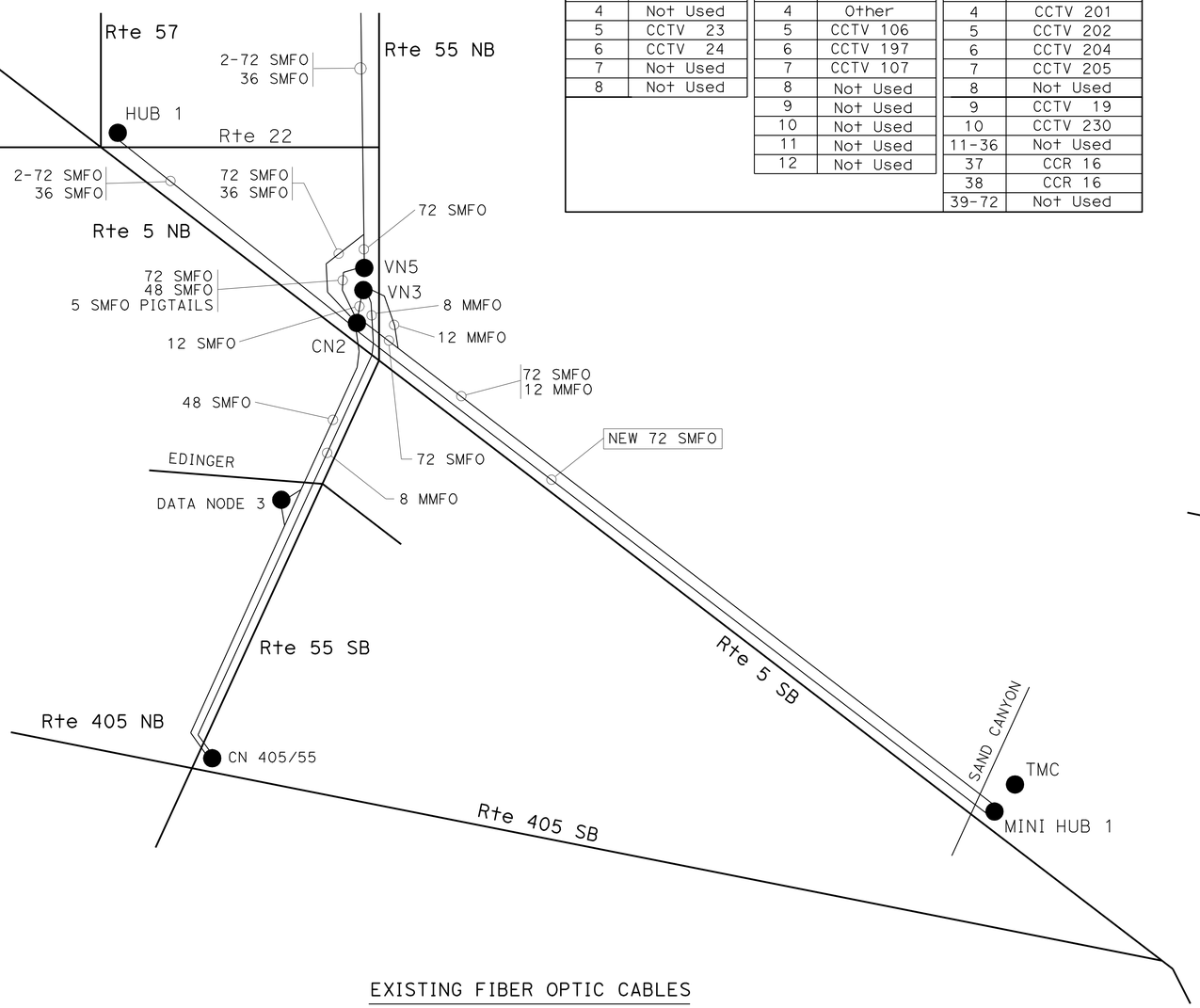


EXISTING FIBER OPTIC CABLES

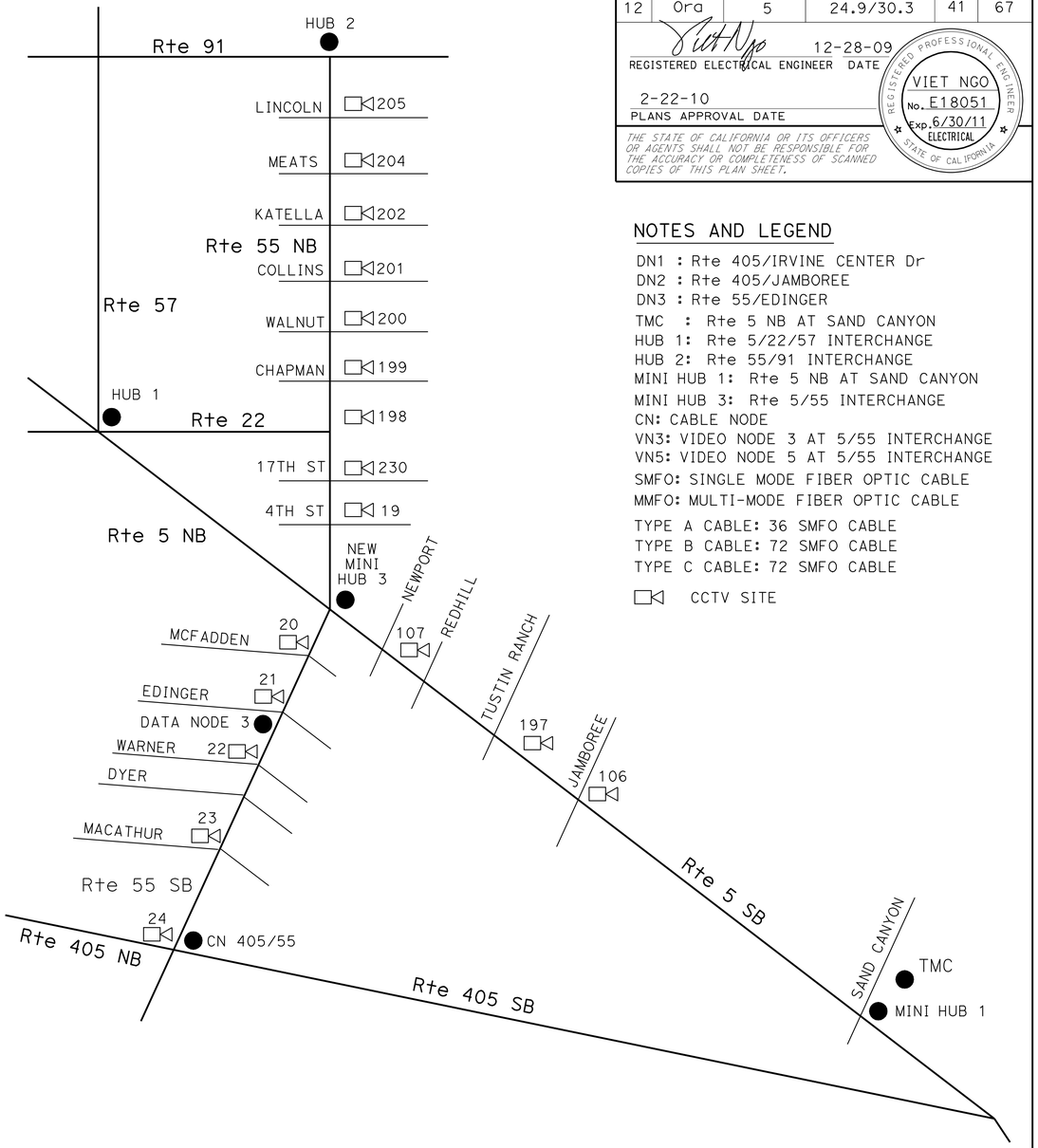


EXISTING CCTVS, NODES AND HUBS

## NOTES AND LEGEND

DN1 : Rte 405/IRVINE CENTER Dr
DN2 : Rte 405/JAMBOREE
DN3 : Rte 55/EDINGER
TMC : Rte 5 NB AT SAND CANYON
HUB 1: Rte 5/22/57 INTERCHANGE
HUB 2: Rte 55/91 INTERCHANGE
MINI HUB 1: Rte 5 NB AT SAND CANYON
MINI HUB 3: Rte 5/55 INTERCHANGE
CN: CABLE NODE
VN3: VIDEO NODE 3 AT 5/55 INTERCHANGE
VN5: VIDEO NODE 5 AT 5/55 INTERCHANGE
SMFO: SINGLE MODE FIBER OPTIC CABLE
MMFO: MULTI-MODE FIBER OPTIC CABLE
TYPE A CABLE: 36 SMFO CABLE
TYPE B CABLE: 72 SMFO CABLE
TYPE C CABLE: 72 SMFO CABLE
CCTV SITE

THIS PLAN IS ACCURATE FOR ELECTRICAL WORK ONLY.

# COMMUNICATION SYSTEM OVERALL SYSTEM DIAGRAM

NO SCALE

E-33

REVISED BY | DATE REVISED
VIET NGO | HENRY PHAM
CALCULATED-DESIGNED BY | CHECKED BY
FUNCTIONAL SUPERVISOR | HENRY PHAM
STATE OF CALIFORNIA - DEPARTMENT OF TRANSPORTATION
Caltrans ELECTRICAL SYSTEMS

LAST REVISION | DATE PLOTTED => 01-MAR-2010
11-30-09 | TIME PLOTTED => 13:00

| DIST | COUNTY | ROUTE | POST MILES TOTAL PROJECT | SHEET NO. | TOTAL SHEETS |
|---|---|---|---|---|---|
| 12 | Ora | 5 | 24.9/30.3 | 42 | 67 |

REGISTERED CIVIL ENGINEER

June 5, 2009
PLANS APPROVAL DATE

REGISTERED PROFESSIONAL ENGINEER Glenn DeCou No. C34547 Exp. 9-30-09 CIVIL STATE OF CALIFORNIA

*The State of California or its officers or agents shall not be responsible for the accuracy or completeness of electronic copies of this plan sheet.*

*To accompany plans dated* 2-22-10

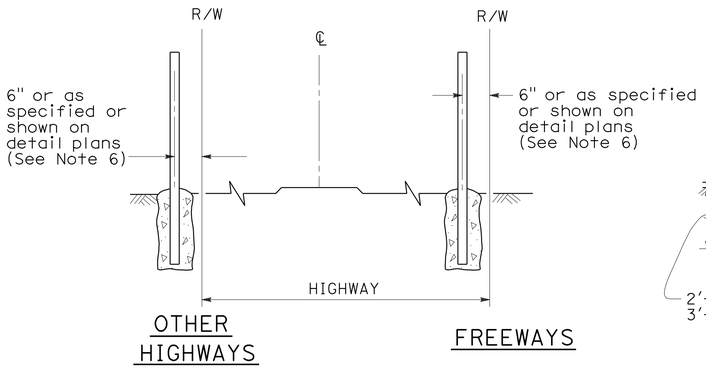


## FENCE LOCATION

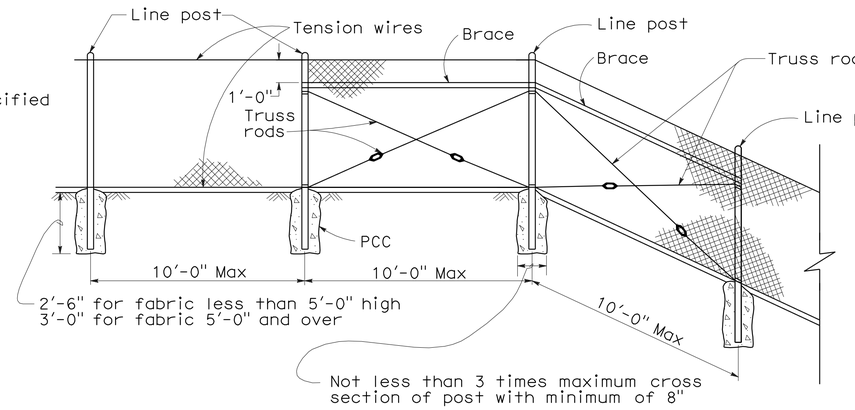


## CHAIN LINK FENCE ON SHARP BREAK IN GRADE

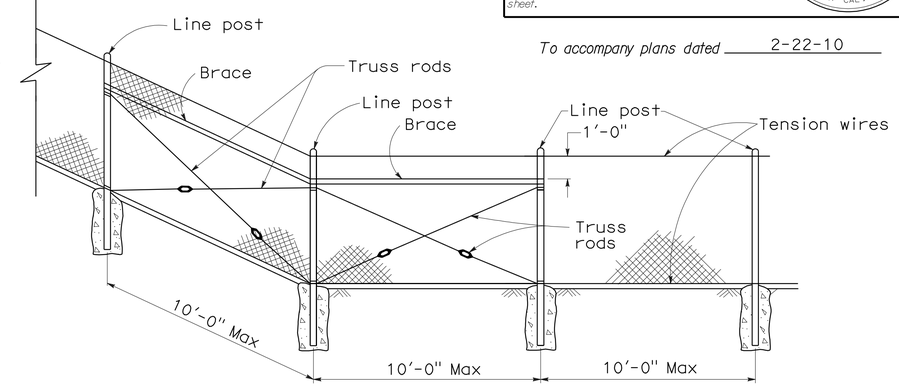


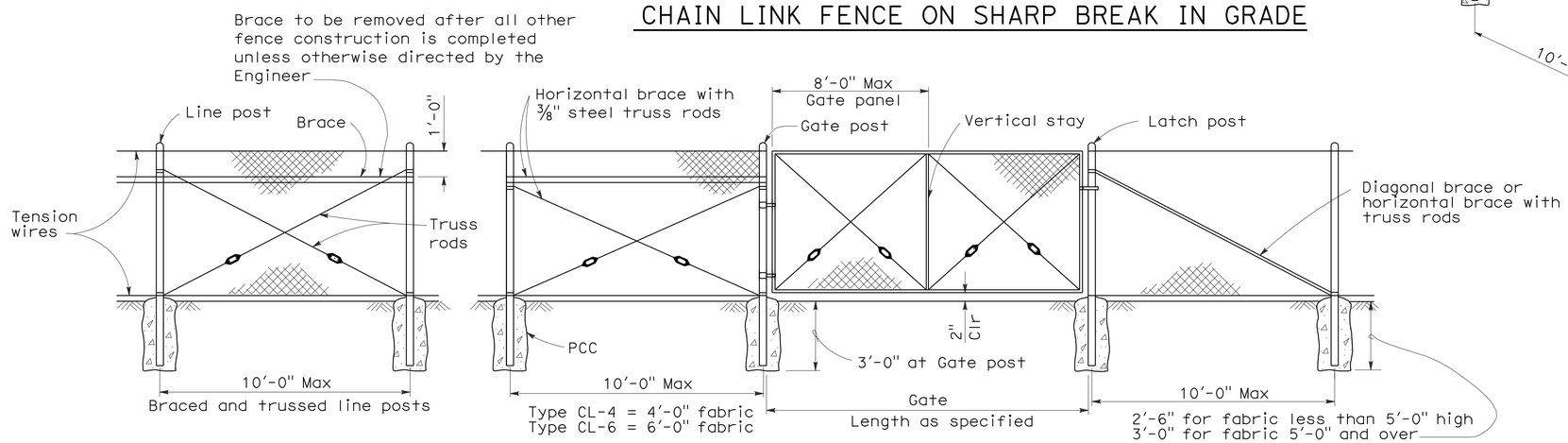


## CHAIN LINK GATE INSTALLATION

| GATE POST | | | |
|---|---|---|---|
| FENCE HEIGHT | GATE WIDTHS | NOMINAL ID | WEIGHT PER FOOT |
| 6'-0" and Less | Up thru 6'-0" | 2½" | 4.95 LB |
| | Over 6'-0" thru 12'-0" | 4" | 10.79 LB |
| | Over 12'-0" thru 18'-0" | 5" | 14.62 LB |
| | Over 18'-0" to 24'-0" Max | 6" | 18.97 LB |
| Over 6'-0" | Up thru 6'-0" | 3" | 7.58 LB |
| | Over 6'-0" thru 12'-0" | 5" | 14.62 LB |
| | Over 12'-0" thru 18'-0" | 6" | 18.97 LB |
| | Over 18'-0" to 24'-0" Max | 8" | 28.55 LB |

Above post dimensions and weights are minimums. Larger sizes may be used on approval of the Engineer.

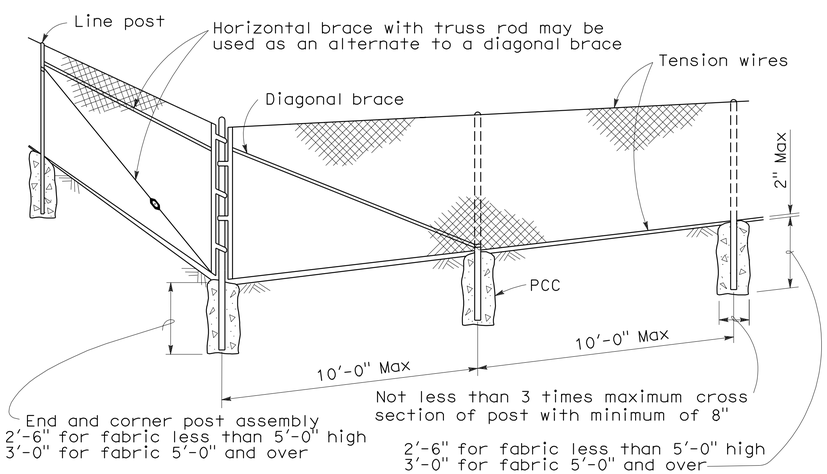


## CORNER POST

## NOTES:

1. The below table shows examples of post and brace sections which may comply with the Specifications.
2. Sections shown in the tables must also comply with the strength requirements and other provisions of the Specifications.
3. Other sections which comply with the strength requirements and other provisions of the Specifications may be used on approval of the Engineer.
4. Options exercised shall be uniform on any one project.
5. Dimensions shown are nominal.
6. Offset to be 2'-0" at monument locations, measured at right angles to R/W lines. Taper to achieve offset to be at least 20'-0" long.

| TYPICAL MEMBER DIMENSIONS (See Notes) | | | | | | | | | | | |
|---|---|---|---|---|---|---|---|---|---|---|---|
| FENCE HEIGHT | LINE POSTS | | | END, LATCH & CORNER POSTS | | | | BRACES | | | |
| | ROUND ID | H | ROLL FORMED | ROUND ID | ROLL FORMED | | | ROUND ID | H | ROLL FORMED | |
| | | | | | | | | | | | |
| 6' & less | 1½" | 1⅞" × 1⅝" | 1⅞" × 1⅝" | 2" | 3½" × 3½" | 2" × 1¾" | | 1¼" | 1½" × 1 5/16" | 1⅝" × 1¼" | 1¾" × 1¼" |
| Over 6' | 2" | 2¼" × 2" | 2" × 1¾" | 2½" | 3½" × 3½" | 2½" × 2½" | | 1¼" | 1½" × 1 5/16" | 1⅝" × 1¼" | 1¾" × 1¼" |

STATE OF CALIFORNIA
DEPARTMENT OF TRANSPORTATION

# CHAIN LINK FENCE

NO SCALE

RSP A85 DATED JUNE 5, 2009 SUPERSEDES STANDARD PLAN A85
DATED MAY 1, 2006 - PAGE 111 OF THE STANDARD PLANS BOOK DATED MAY 2006.

**REVISED STANDARD PLAN RSP A85**

**2006 REVISED STANDARD PLAN RSP A85**

5-7-09

| DIST | COUNTY | ROUTE | POST MILES TOTAL PROJECT | SHEET NO. | TOTAL SHEETS |
|---|---|---|---|---|---|
| 12 | Ora | 5 | 24.9/30.3 | 43 | 67 |

LICENSED LANDSCAPE ARCHITECT

June 5, 2009
PLANS APPROVAL DATE

LICENSED LANDSCAPE ARCHITECT Gregory A. Balzer 2576 STATE OF CALIFORNIA
10-01-09 (renewal date)
2-28-11 date
5-14-09 date

*The State of California or its officers or agents shall not be responsible for the accuracy or completeness of electronic copies of this plan sheet.*

*To accompany plans dated* 2-22-10

## A

| | |
|---|---|
| AB | aggregate base |
| ABS | acrylonitrile-butadiene-styrene |
| AC | asphalt concrete |
| Adj | adjacent/adjustable |
| AIC | auxiliary irrigation controller |
| Alt | alternative |
| AMEND | amendment |
| ARV | air release valve |
| AUTO | automatic |
| AUX | auxiliary |
| AVB | atmospheric vacuum breaker |

## B

| | |
|---|---|
| B&B | balled and burlapped |
| B/B | brass/bronze |
| B/B/PL | brass/bronze/plastic |
| B/PL | brass/plastic |
| BFM | bonded fiber matrix |
| Bit Ctd | bituminous coated |
| BP | booster pump |
| BPA | backflow preventer assembly |
| BPAE | backflow preventer assembly in enclosure |
| BPE | backflow preventer enclosure |
| BV | ball valve |

## C

| | |
|---|---|
| CAP | corrugated aluminum pipe |
| CARV | combination air release valve |
| CCA | cam coupler assembly |
| CEC | controller enclosure cabinet |
| CHDPE | corrugated high density polyethylene |
| CL | chain link |
| CNC | control and neutral conductors |
| Conc | concrete |
| Cond | conduit |
| CSP | corrugated steel pipe |
| CST | center strip |
| CV | check valve |

## D

| | |
|---|---|
| Dia | diameter |
| DIP | ductile iron pipe |
| DN | diameter nominal |

## E

| | |
|---|---|
| EA | each |
| Elect | electric/electrical |
| Elev | elevation |
| ENCL | enclosure |
| EP | edge of pavement |
| ES | edge of shoulder |
| EST | end strip |
| ESTB | establishment |
| ETW | edge of traveled way |

## F

| | |
|---|---|
| F | full circle |
| F/P | full/part circle |
| FAU | filter assembly unit |
| FCV | flow control valve |
| FERT | fertilizer |
| FG | finished grade |
| FIPT | female iron pipe thread |
| FIS | fertilizer injector system |
| FL | flow line |
| FM | flow monitor |
| FS | flow sensor |
| Ft | foot/feet |
| FV | flush valve |

## G

| | |
|---|---|
| GAL | Gallon(s) |
| Galv | galvanized |
| GARV | garden valve |
| GPH | gallons per hour |
| GPM | gallons per minute |
| GSP | galvanized steel pipe |
| GV | gate valve |

## H

| | |
|---|---|
| H | half circle |
| HB | hose bib |
| HDPE | high density polyethylene |
| HP | horsepower/hinge point |
| HPL | high pressure line |
| Hwy | highway |

## I

| | |
|---|---|
| IC | irrigation controller |
| ICC | irrigation controller(s) in controller enclosure cabinet |
| ID | inside diameter |
| In | inches |
| IFS | irrigation filtration system |
| IPS | iron pipe size |
| IPT | iron pipe thread |
| Irr | irrigation |

## L

| | |
|---|---|
| L | length |
| LF | linear foot |

## M

| | |
|---|---|
| Max | maximum |
| MBGR | metal beam guard railing |
| MCV | manual control valve |
| MIC | master irrigation controller |
| Min | minimum |
| MIPT | male iron pipe thread |
| Misc | miscellaneous |
| Mtl | material |
| MVP | maintenance vehicle pullout |

## N

| | |
|---|---|
| NCN | no common name |
| NL | nozzle line |
| No. | number |
| NPT | national pipe thread |

## O

| | |
|---|---|
| O/C | on center |
| OD | outside diameter |
| Oz | ounce |

## P

| | |
|---|---|
| P | part circle |
| PB | pull box |
| PCC | portland cement concrete |
| PE | polyethylene |
| Pkt | packet |
| PL | plastic |
| PLT | plant/planting |
| PLT ESTB | plant establishment |
| PM | post mile |
| PR | pressure rated |
| PRLV | pressure relief valve |
| PSFM | polymer stabilized fiber matrix |
| PSI | pounds per square inch |
| PRV | pressure reducing valve |
| PVC | polyvinyl chloride |
| Pvmt | pavement |

## Q

| | |
|---|---|
| Q | quarter circle |
| QCV | quick coupling valve |

## R

| | |
|---|---|
| R | radius |
| RCP | reinforced concrete pipe |
| RCV | remote control valve |
| RCVM | remote control valve (master) |
| RCVMF | remote control valve (master) w/ flow meter |
| RCW | recycled/reclaimed water |
| RECP | rolled erosion control product |
| REQ | required |
| R/W | right of way |

## S

| | |
|---|---|
| S | slip |
| SCC | sprinkler control conduit |
| SCH | schedule |
| SF | state-furnished |
| Shld | shoulder |
| SQFT | square foot/feet |
| SQYD | square yard(s) |
| SST | side strip |
| Sta | station |
| Std | standard |
| SW | sidewalk/sound wall |

## T

| | |
|---|---|
| T | third circle/thread |
| TLS | truck loading standpipe |
| TQ | three quarter circle |
| TRM | turf reinforcement mat |
| TRVD | traveled |
| TT | two third circle |
| Typ | typical |

## U

| | |
|---|---|
| UG | underground |

## V

| | |
|---|---|
| VAU | valve assembly unit |

## W

| | |
|---|---|
| W | width |
| W/ | with |
| WM | water meter |
| WS | wye strainer |
| WSP | welded steel pipe |
| WWM | welded wire mesh |

**NOTE:**

FOR ADDITIONAL ABBREVIATIONS, SEE STANDARD PLANS A10A AND A10B.

STATE OF CALIFORNIA
DEPARTMENT OF TRANSPORTATION

# PLANTING AND IRRIGATION ABBREVIATIONS

NO SCALE

RSP H1 DATED JUNE 5, 2009 SUPERSEDES STANDARD PLAN H1
DATED MAY 1, 2006 - PAGE 201 OF THE STANDARD PLANS BOOK DATED MAY 2006.

**REVISED STANDARD PLAN RSP H1**

**2006 REVISED STANDARD PLAN RSP H1**

5-28-09

| DIST | COUNTY | ROUTE | POST MILES TOTAL PROJECT | SHEET NO. | TOTAL SHEETS |
|---|---|---|---|---|---|
| 12 | Ora | 5 | 24.9/30.3 | 44 | 67 |

LICENSED LANDSCAPE ARCHITECT

June 5, 2009
PLANS APPROVAL DATE

*The State of California or its officers or agents shall not be responsible for the accuracy or completeness of electronic copies of this plan sheet.*

Gregory A. Balzer 2016 — 10 (expiration) — 2-28-11 (renewal date) — 5-14-09 (date) — LICENSED LANDSCAPE ARCHITECT — STATE OF CALIFORNIA

*To accompany plans dated* 2-22-10

| EXISTING | PROPOSED | ITEM DESCRIPTION |
|---|---|---|
| | | WATER METER (WM) |
| | | BACKFLOW PREVENTER ASSEMBLY (BPA) |
| | | BACKFLOW PREVENTER ASSEMBLY IN ENCLOSURE (BPAE) |
| | | BACKFLOW PREVENTER ENCLOSURE (BPE) |
| | | BOOSTER PUMP (BP) |
| | | TRUCK LOADING STANDPIPE (TLS) |
| FS | FS | FLOW SENSOR (FS) |
| X | X | MASTER IRRIGATION CONTROLLER (MIC) |
| | | AUXILIARY IRRIGATION CONTROLLER (AIC) |
| | | IRRIGATION CONTROLLER (IC)/ IRRIGATION CONTROLLER (IC) (BATTERY) IRRIGATION CONTROLLER (IC) (SOLAR) |
| | | IRRIGATION CONTROLLER(S) IN CONTROLLER ENCLOSURE CABINET (ICC) |
| | | CONTROL AND NEUTRAL CONDUCTORS (CNC) |
| SCC | SCC | SPRINKLER CONTROL CONDUIT (SCC) |
| | | IRRIGATION CROSSOVER |
| | | EXTEND IRRIGATION CROSSOVER |
| | | IRRIGATION SLEEVE |
| dip | DIP | DUCTILE IRON PIPE (SUPPLY LINE) (MAIN) (DIP) |
| | | GALVANIZED STEEL PIPE (SUPPLY LINE) (MAIN) (GSP) |
| | | GALVANIZED STEEL PIPE (SUPPLY LINE) (LATERAL) (GSP) |
| | | PLASTIC PIPE (PR 200) (SUPPLY LINE) (MAIN) |
| | | PLASTIC PIPE (PR 200) (SUPPLY LINE) (LATERAL) |
| | | PLASTIC PIPE (IRRIGATION LINE) |
| | | REMOTE CONTROL VALVE (RCV) REMOTE CONTROL VALVE (MASTER) (RCVM) REMOTE CONTROL VALVE (MASTER) W/FLOW METER (RCVMF) |
| | | MANUAL CONTROL VALVE (MCV) |
| | | VALVE ASSEMBLY UNIT (VAU) |
| | | WYE STRAINER (WS) |
| | | FILTER ASSEMBLY UNIT (FAU) |
| | | GATE VALVE (GV) |
| | | BALL VALVE (BV) |

| EXISTING | PROPOSED | ITEM DESCRIPTION |
|---|---|---|
| | | QUICK COUPLING VALVE (QCV) |
| | | CAM COUPLER ASSEMBLY (CCA) |
| | | PRESSURE REDUCING VALVE (PRV) |
| | | PRESSURE RELIEF VALVE (PRLV) |
| | | FLOW CONTROL VALVE (FCV) |
| | | COMBINATION AIR RELEASE VALVE (CARV) |
| | | CHECK VALVE (CV) |
| | | FLUSH VALVE (FV) |
| | | NOZZLE LINE W/TURNING UNION |
| | | IRRIGATION SYSTEM |
| | | IRRIGATION SYSTEM TO BE REMOVED |
| | | CHAIN LINK GATE |
| | | QUICK COUPLING VALVE W/SPRINKLER PROTECTOR |
| 3 | 3 | SPRINKLER W/SPRINKLER PROTECTOR |
| | C | CONNECT TO EXISTING SYSTEM |
| | | CAP |
| | | CAP EXISTING |

## VALVE CODE

RCV SIZE
IRRIGATION CONTROLLER
CONTROLLER STATION
VALVE IN PARALLEL (IF APPLICABLE)
GPM
QUANTITY OF SPRINKLERS (WHEN SHOWN)

* 2½"-A-2b-40 -60

MCV SIZE
VALVE NUMBER
GPM
QUANTITY OF TYPE SPRINKLERS (WHEN SHOWN)

* 2"-3-30 -50

* VALVE CODES FOR EXISTING VALVES ARE SHOWN IN A DASHED ENCLOSURE.

STATE OF CALIFORNIA
DEPARTMENT OF TRANSPORTATION

# PLANTING AND IRRIGATION SYMBOLS

NO SCALE

RSP H2 DATED JUNE 5, 2009 SUPERSEDES RSP H2 DATED MARCH 7, 2008 AND STANDARD PLAN H2 DATED MAY 1, 2006 - PAGE 202 OF THE STANDARD PLANS BOOK DATED MAY 2006.

**REVISED STANDARD PLAN RSP H2**

**2006 REVISED STANDARD PLAN RSP H2**

5-11-09

| DIST | COUNTY | ROUTE | POST MILES TOTAL PROJECT | SHEET NO. | TOTAL SHEETS |
|---|---|---|---|---|---|
| 12 | Ora | 5 | 24.9/30.3 | 45 | 67 |

LICENSED LANDSCAPE ARCHITECT

June 5, 2009
PLANS APPROVAL DATE

*The State of California or its officers or agents shall not be responsible for the accuracy or completeness of electronic copies of this plan sheet.*

LICENSED LANDSCAPE ARCHITECT — Gregory A. Balzer — 2576 — 10 January — 2-28-11 (Renewal Date) — 5-14-09 (Date) — STATE OF CALIFORNIA

*To accompany plans dated* 2-22-10

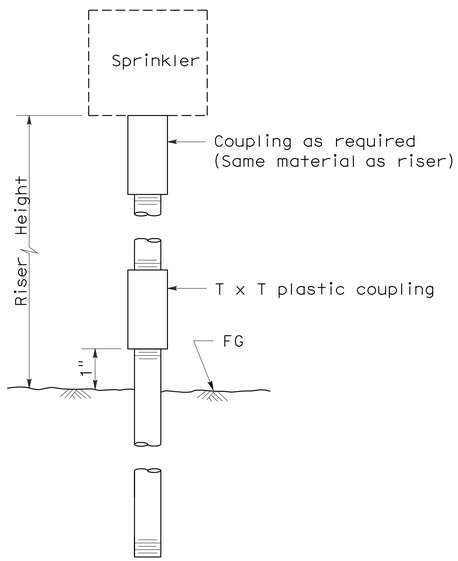


ELEVATION
RISER TYPE I

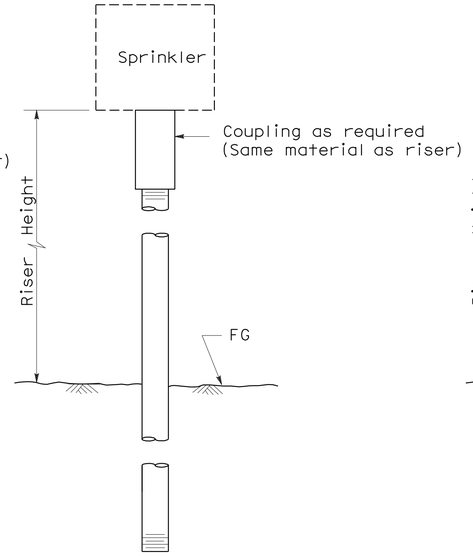


ELEVATION
RISER TYPE II

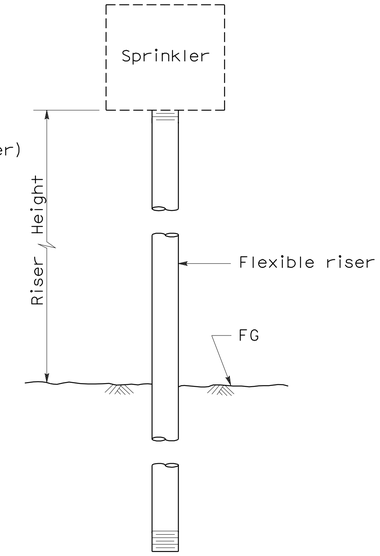


ELEVATION
RISER TYPE III

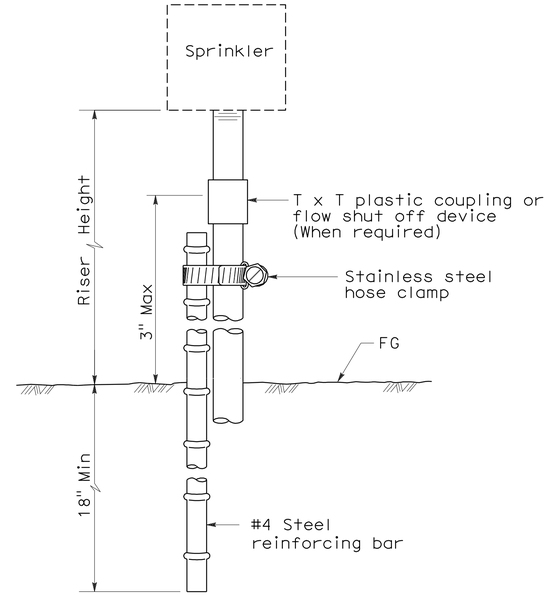


ELEVATION
RISER TYPE IV

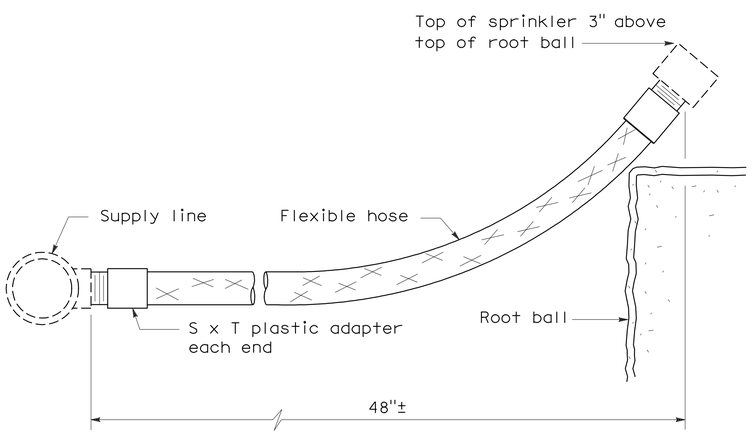


ELEVATION
RISER TYPE V

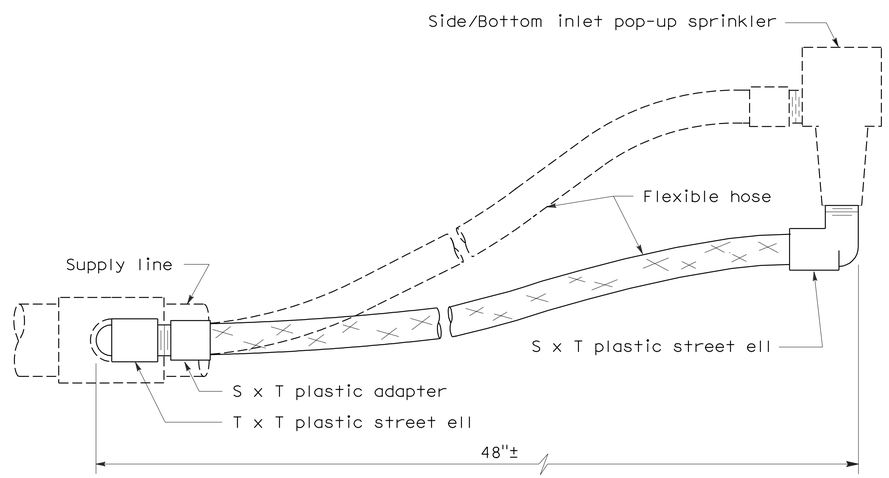


ELEVATION
RISER TYPE VI

STATE OF CALIFORNIA
DEPARTMENT OF TRANSPORTATION

# PLANTING AND IRRIGATION DETAILS

NO SCALE

RSP H5 DATED JUNE 5, 2009 SUPERSEDES STANDARD PLAN H5
DATED MAY 1, 2006 - PAGE 205 OF THE STANDARD PLANS BOOK DATED MAY 2006.

**REVISED STANDARD PLAN RSP H5**

**2006 REVISED STANDARD PLAN RSP H5**

| DIST | COUNTY | ROUTE | POST MILES TOTAL PROJECT | SHEET NO. | TOTAL SHEETS |
|---|---|---|---|---|---|
| 12 | Ora | 5 | 24.9/30.3 | 46 | 67 |

LICENSED LANDSCAPE ARCHITECT

June 5, 2009
PLANS APPROVAL DATE

Gregory A. Baker 2576 LICENSED LANDSCAPE ARCHITECT STATE OF CALIFORNIA
10-28-10 Expiration date
2-28-11 Renewal date
5-14-09 Date

*The State of California or its officers or agents shall not be responsible for the accuracy or completeness of electronic copies of this plan sheet.*

*To accompany plans dated* 2-22-10

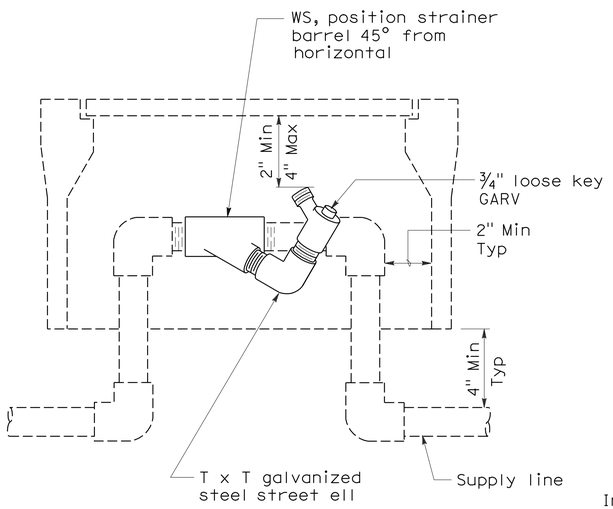


ELEVATION
## WYE STRAINER

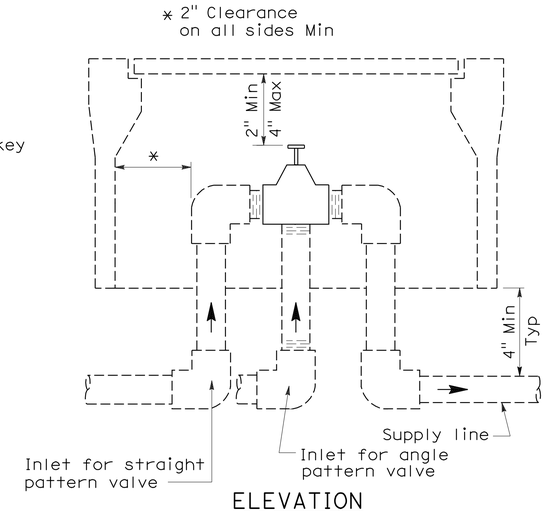


ELEVATION
## VALVE

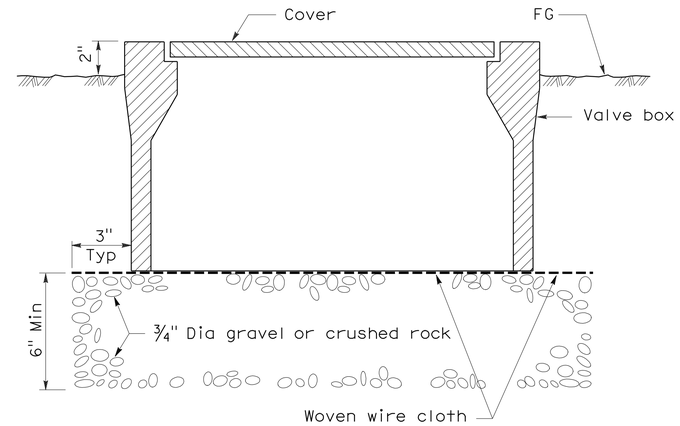


SECTION
## VALVE BOX

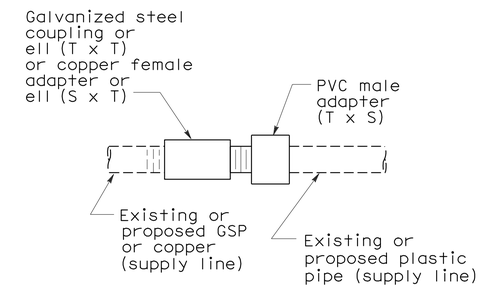


PLAN
## GALVANIZED OR COPPER PIPE CONNECTION TO PLASTIC PIPE

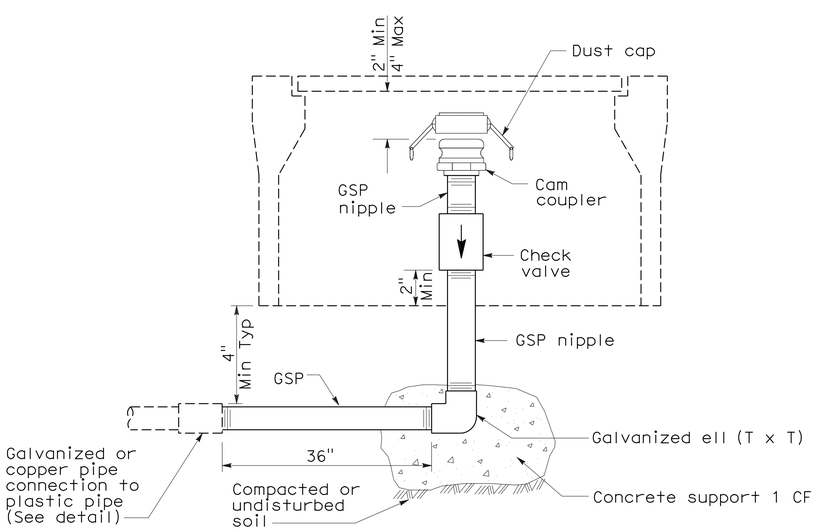


ELEVATION
## CAM COUPLER ASSEMBLY

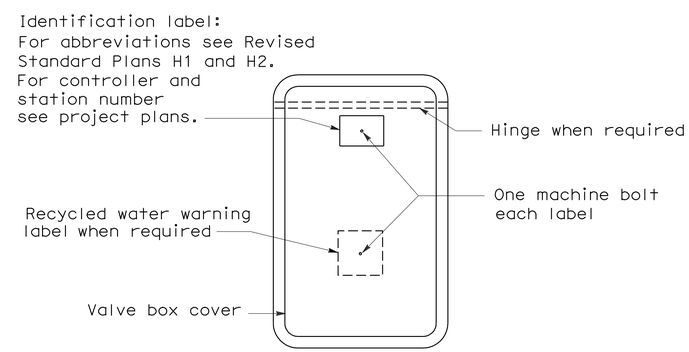


PLAN

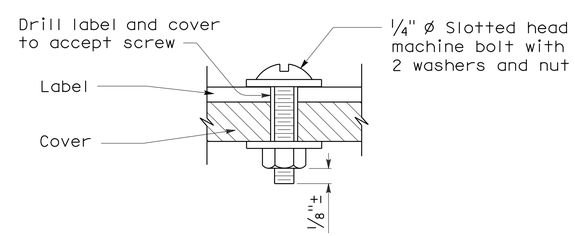


SECTION
## VALVE BOX IDENTIFICATION

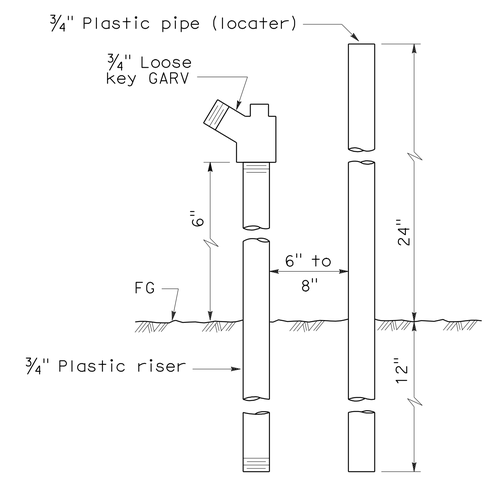


ELEVATION
## FLUSH VALVE

STATE OF CALIFORNIA
DEPARTMENT OF TRANSPORTATION

# PLANTING AND IRRIGATION DETAILS

NO SCALE

RSP H7 DATED JUNE 5, 2009 SUPERSEDES STANDARD PLAN H7
DATED MAY 1, 2006 - PAGE 207 OF THE STANDARD PLANS BOOK DATED MAY 2006.

**REVISED STANDARD PLAN RSP H7**

**2006 REVISED STANDARD PLAN RSP H7**

5-28-09

| DIST | COUNTY | ROUTE | POST MILES TOTAL PROJECT | SHEET NO. | TOTAL SHEETS |
|---|---|---|---|---|---|
| 12 | Ora | 5 | 24.9/30.3 | 47 | 67 |

Randell D. Hiatt
REGISTERED CIVIL ENGINEER

June 6, 2008
PLANS APPROVAL DATE

REGISTERED PROFESSIONAL ENGINEER
Randell D. Hiatt
No. C50200
Exp. 6-30-09
CIVIL
STATE OF CALIFORNIA

*The State of California or its officers or agents shall not be responsible for the accuracy or completeness of electronic copies of this plan sheet.*

*To accompany plans dated* 2-22-10

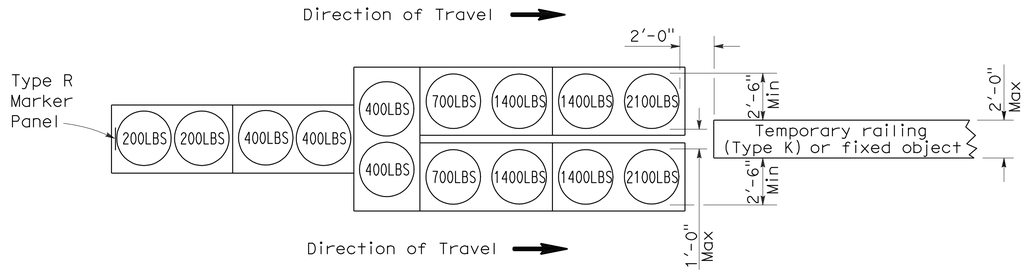


## ARRAY 'TU14'

Approach speed 45 mph or more

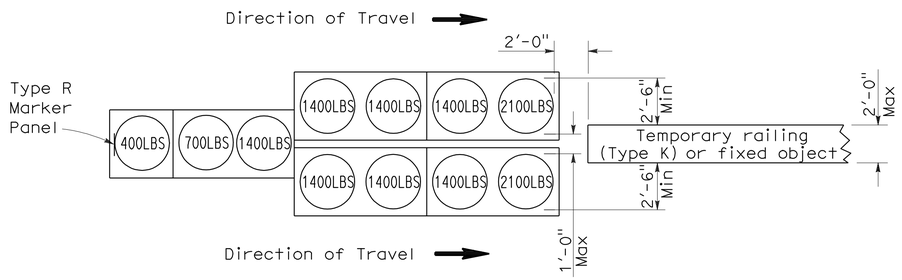


## ARRAY 'TU11'

Approach speed less than 45 mph

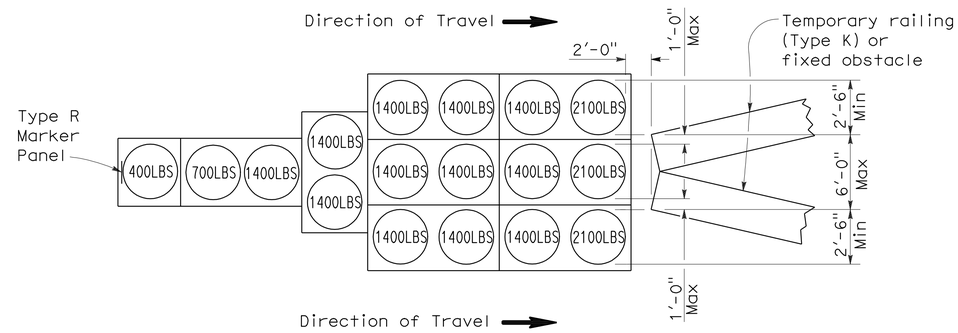


## ARRAY 'TU17'

Approach speed less than 45 mph

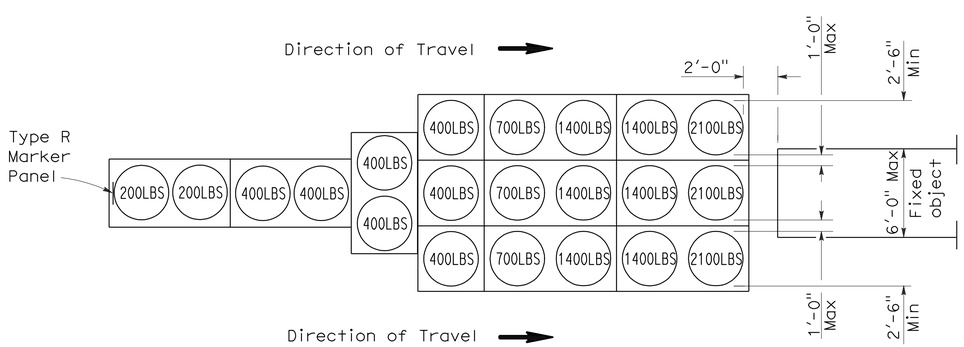


## ARRAY 'TU21'

Approach speed 45 mph or more

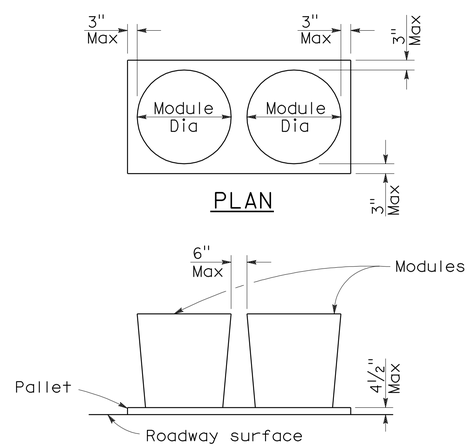


## ELEVATION

## CRASH CUSHION PALLET DETAIL

See Note 7

## NOTES:

1. (XXX) Indicates sand filled module location and weight of sand in pounds for each module. Module spacing is based on the greater diameter of the module.
2. All sand weights are nominal.
3. Temporary crash cushion arrays shall not encroach on the traveled way.
4. Place the top of Type R marker panel 1" below the module lid.
5. Refer to Standard Plan A73B for marker details.
6. Approach speeds indicated conform to NCHRP 350 Report criteria.
7. Use of pallets is optional.

STATE OF CALIFORNIA
DEPARTMENT OF TRANSPORTATION

# TEMPORARY CRASH CUSHION, SAND FILLED (UNIDIRECTIONAL)

NO SCALE

RSP T1A DATED JUNE 6, 2008 SUPERSEDES STANDARD PLAN T1A
DATED MAY 1, 2006 - PAGE 211 OF THE STANDARD PLANS BOOK DATED MAY 2006.

**REVISED STANDARD PLAN RSP T1A**

**2006 REVISED STANDARD PLAN RSP T1A**

5-15-08

| DIST | COUNTY | ROUTE | POST MILES TOTAL PROJECT | SHEET NO. | TOTAL SHEETS |
|---|---|---|---|---|---|
| 12 | Ora | 5 | 24.9/30.3 | 48 | 67 |

Randell D. Hiatt
REGISTERED CIVIL ENGINEER

June 6, 2008
PLANS APPROVAL DATE

REGISTERED PROFESSIONAL ENGINEER
Randell D. Hiatt
No. C50200
Exp. 6-30-09
CIVIL
STATE OF CALIFORNIA

*The State of California or its officers or agents shall not be responsible for the accuracy or completeness of electronic copies of this plan sheet.*

*To accompany plans dated* 2-22-10

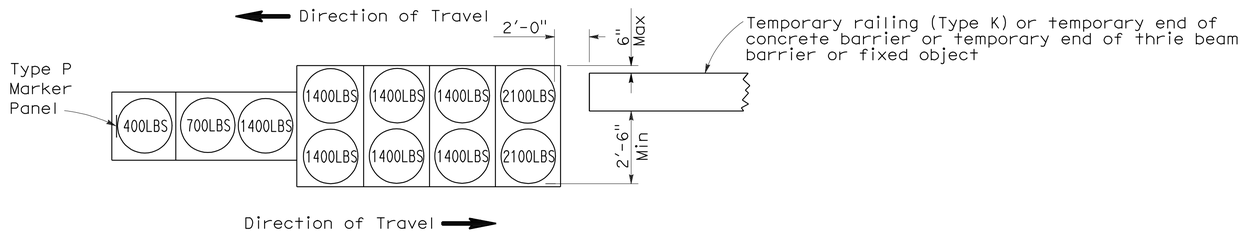


ARRAY 'TB11'

Approach speed less than 45 mph

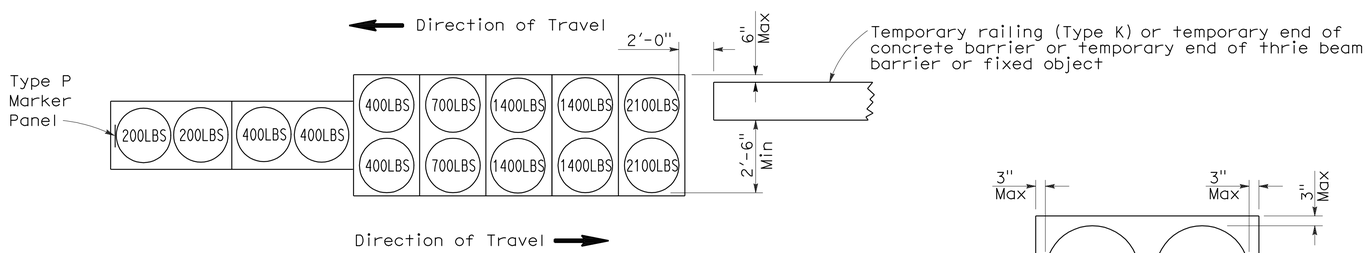


ARRAY 'TB14'

Approach speed 45 mph or more

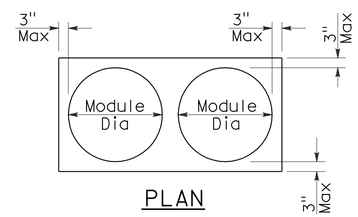


PLAN

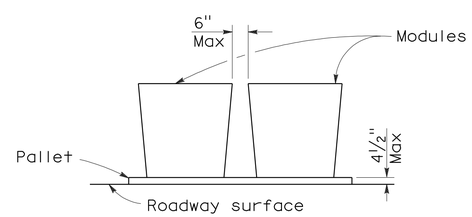


ELEVATION

CRASH CUSHION PALLET DETAIL

See Note 7

## NOTES:

1. (XXX) Indicates sand filled module location and weight of sand in pounds for each module. Module spacing is based on the greater diameter of the module.
2. All sand weights are nominal.
3. Temporary crash cushion arrays shall not encroach on the traveled way.
4. Place the Type P marker panel so that the bottom of the panel rests upon the pallet.
5. Refer to Standard Plan A73B for marker details.
6. Approach speeds indicated conform to NCHRP 350 Report criteria.
7. Use of pallets is optional.

STATE OF CALIFORNIA
DEPARTMENT OF TRANSPORTATION

# TEMPORARY CRASH CUSHION, SAND FILLED (BIDIRECTIONAL)

NO SCALE

RSP T1B DATED JUNE 6, 2008 SUPERSEDES STANDARD PLAN T1B
DATED MAY 1, 2006 - PAGE 212 OF THE STANDARD PLANS BOOK DATED MAY 2006.

**REVISED STANDARD PLAN RSP T1B**

**2006 REVISED STANDARD PLAN RSP T1B**

5-15-08

| DIST | COUNTY | ROUTE | POST MILES TOTAL PROJECT | SHEET NO. | TOTAL SHEETS |
|---|---|---|---|---|---|
| 12 | Ora | 5 | 24.9/30.3 | 49 | 67 |

Randell D. Hiatt
REGISTERED CIVIL ENGINEER

June 6, 2008
PLANS APPROVAL DATE

REGISTERED PROFESSIONAL ENGINEER
Randell D. Hiatt
No. C50200
Exp. 6-30-09
CIVIL
STATE OF CALIFORNIA

*The State of California or its officers or agents shall not be responsible for the accuracy or completeness of electronic copies of this plan sheet.*

*To accompany plans dated* 2-22-10

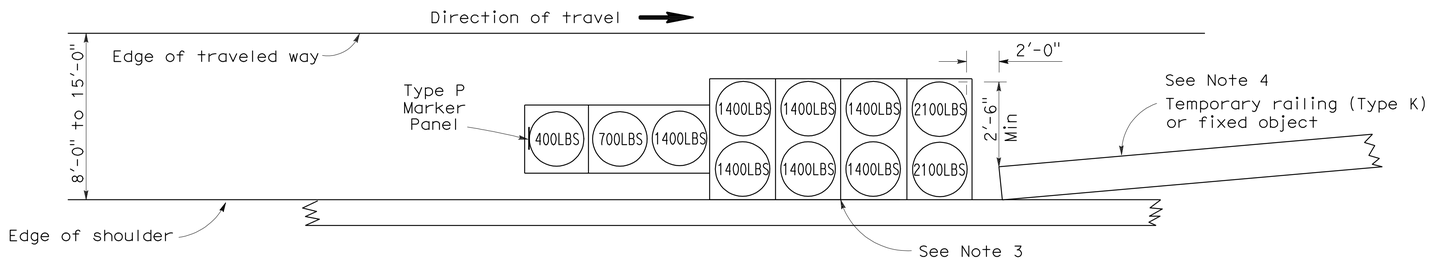


## ARRAY 'TS11'

Approach speed less than 45 mph
See Note 9

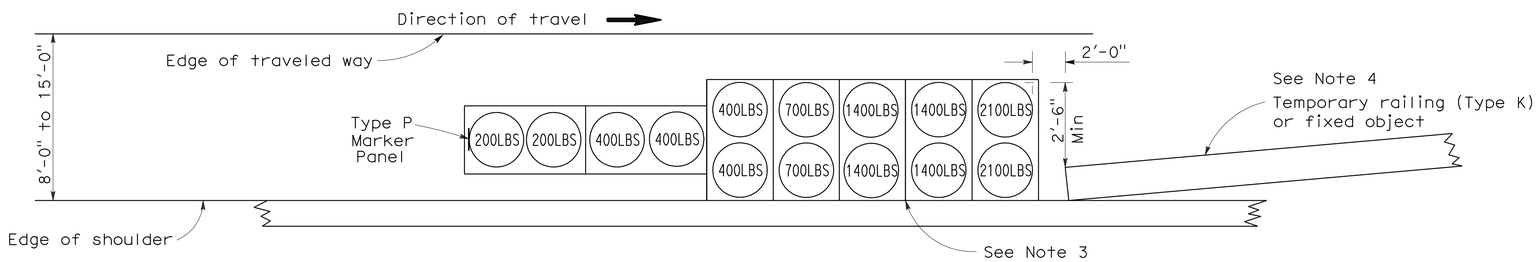


## ARRAY 'TS14'

Approach speed 45 mph or more
See Note 9

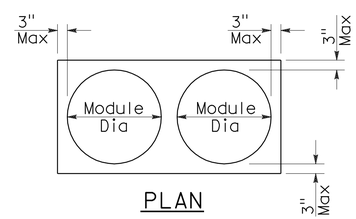


PLAN

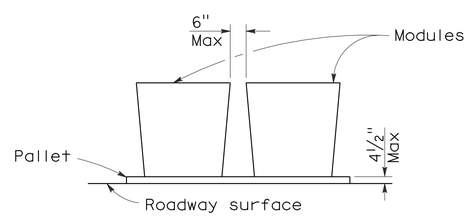


ELEVATION

## CRASH CUSHION PALLET DETAIL

See Note 11

## NOTES:

1. (XXX) Indicates sand filled module location and weight of sand in pounds for each module. Module spacing is based on the greater diameter of the module.
2. All sand weights are nominal.
3. The temporary crash cushion arrays shown on this plan shall be used only in locations where there will be traffic on one side of the temporary crash cushion array.
4. If the fixed object or approach end of the temporary railing is less than 15'-0" from the edge of traveled way, a temporary crash cushion is required in a construction or work zone.
5. Temporary crash cushion arrays shall not encroach on the traveled way.
6. Arrays for median shoulders shall conform to details shown on this plan for outside shoulders.
7. Place the Type P marker panel so that the bottom of the panel rests upon the pallet and faces traffic.
8. Refer to Standard Plan A73B for marker details.
9. For shoulder widths less than 8'-0", appropriate approved crash cushion protection, other than sand filled modules, shall be provided at fixed objects and at approach ends of temporary railing. The specific type of crash cushion shall be as shown on the project plans or as specified in the Special Provisions, or if not shown on the project plans or specified in the Special Provisions, shall be as approved by the Engineer.
10. Approach speeds indicated conform to NCHRP 350 Report criteria.
11. Use of pallets is optional.

STATE OF CALIFORNIA
DEPARTMENT OF TRANSPORTATION

# TEMPORARY CRASH CUSHION, SAND FILLED (SHOULDER INSTALLATIONS)

NO SCALE

RSP T2 DATED JUNE 6, 2008 SUPERSEDES STANDARD PLAN T2
DATED MAY 1, 2006 - PAGE 213 OF THE STANDARD PLANS BOOK DATED MAY 2006.

**REVISED STANDARD PLAN RSP T2**

**2006 REVISED STANDARD PLAN RSP T2**

5-15-08

| DIST | COUNTY | ROUTE | POST MILES TOTAL PROJECT | SHEET NO. | TOTAL SHEETS |
|---|---|---|---|---|---|
| 12 | Ora | 5 | 24.9/30.3 | 50 | 67 |

LICENSED LANDSCAPE ARCHITECT

April 3, 2009
PLANS APPROVAL DATE

LICENSED LANDSCAPE ARCHITECT — Robert B. Schott — 3625 — Registered Expires 11-30-10 — Renewal Date 2-25-09 — Date — STATE OF CALIFORNIA

*The State of California or its officers or agents shall not be responsible for the accuracy or completeness of electronic copies of this plan sheet.*

*To accompany plans dated* 2-22-10

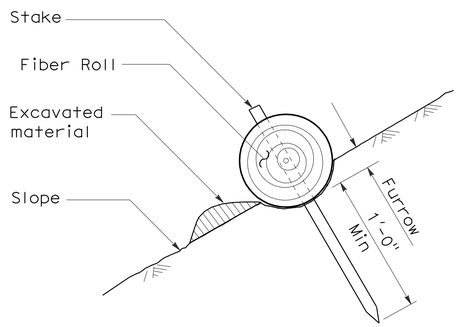


SECTION

TEMPORARY FIBER ROLL (TYPE 1)

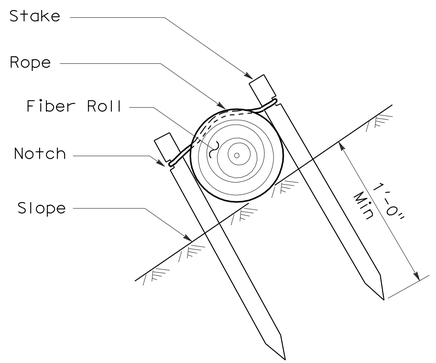


SECTION

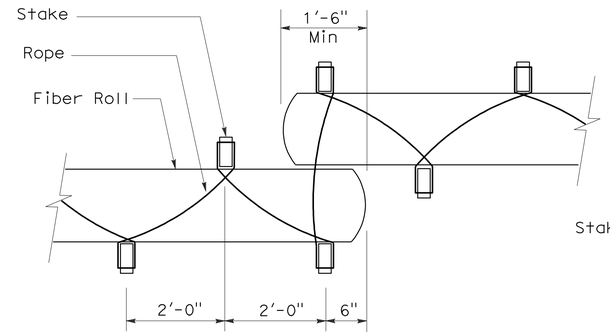


PLAN

TEMPORARY FIBER ROLL (TYPE 2)

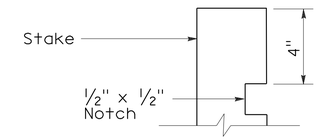


ELEVATION

STAKE NOTCH DETAIL

NOTES:

1. Temporary fiber roll spacing varies depending upon slope inclination.
2. Installations shown in the perspectives are for slope inclination of 10:1 and steeper.

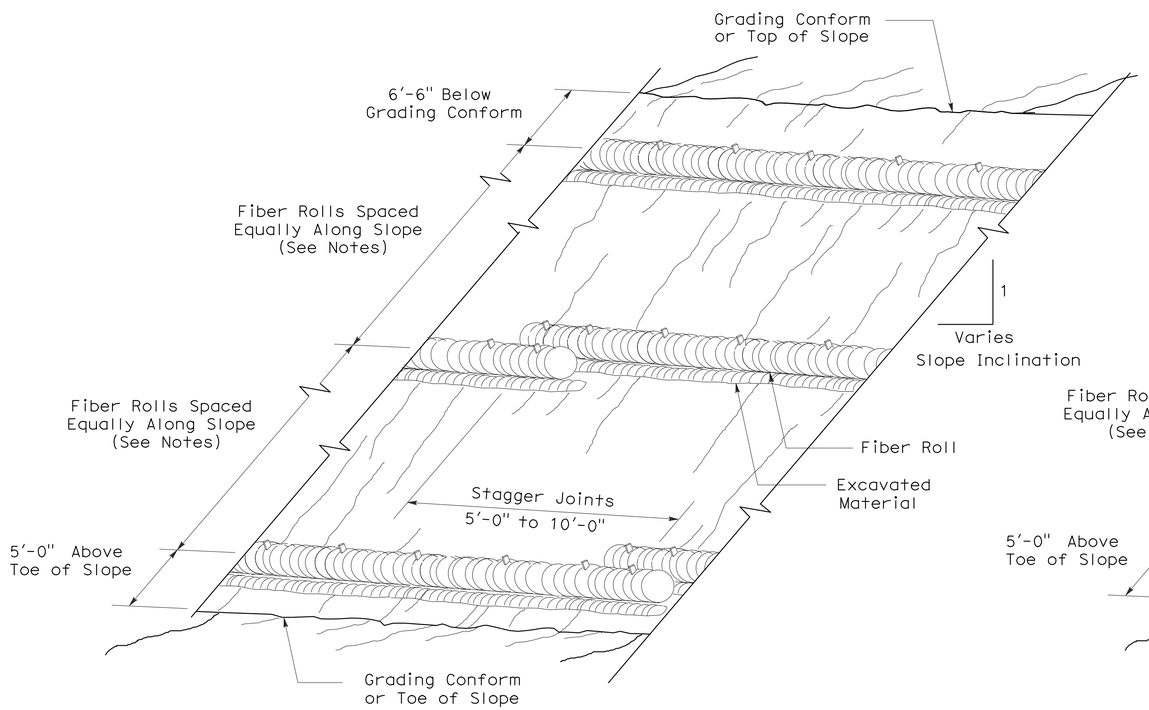


PERSPECTIVE

TEMPORARY FIBER ROLL (TYPE 1)

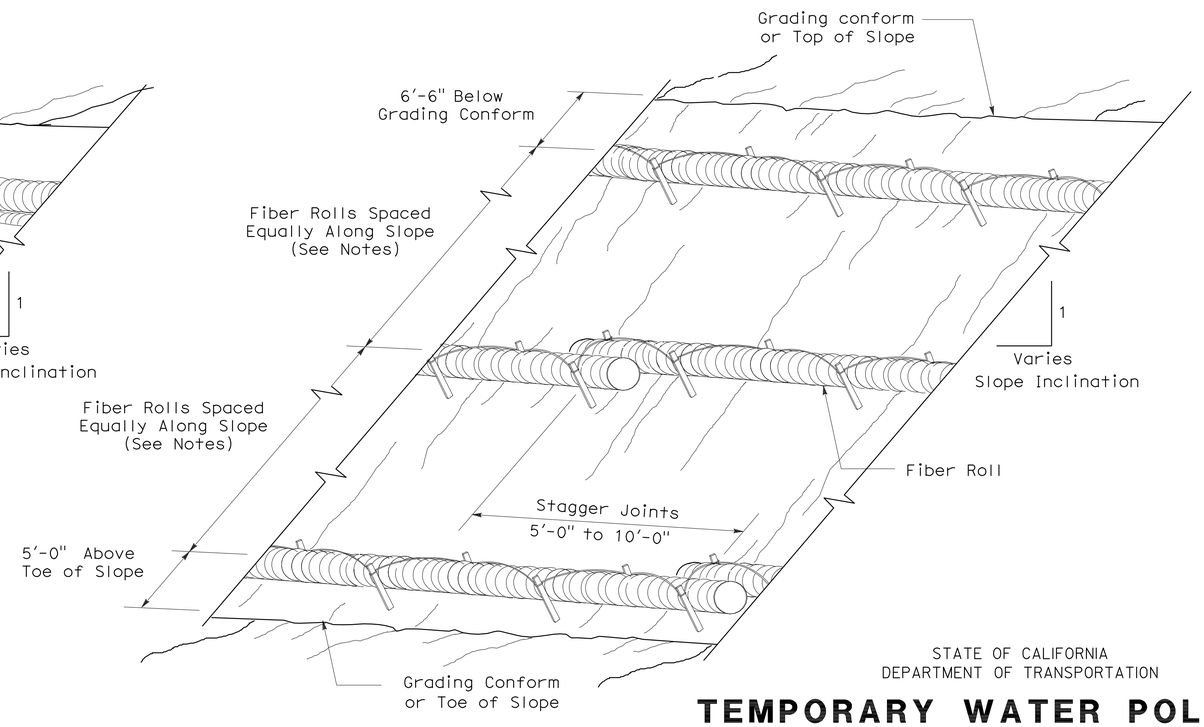


PERSPECTIVE

TEMPORARY FIBER ROLL (TYPE 2)

STATE OF CALIFORNIA
DEPARTMENT OF TRANSPORTATION

# TEMPORARY WATER POLLUTION CONTROL DETAILS (TEMPORARY FIBER ROLL)

NO SCALE

RSP T56 DATED APRIL 3, 2009 SUPERSEDES STANDARD PLAN T56
DATED MAY 1, 2006 - PAGE 232 OF THE STANDARD PLANS BOOK DATED MAY 2006.

**REVISED STANDARD PLAN RSP T56**

**2006 REVISED STANDARD PLAN RSP T56**

| DIST | COUNTY | ROUTE | POST MILES TOTAL PROJECT | SHEET NO. | TOTAL SHEETS |
|---|---|---|---|---|---|
| 12 | Ora | 5 | 24.9/30.3 | 51 | 67 |

LICENSED LANDSCAPE ARCHITECT

August 15, 2008
PLANS APPROVAL DATE

*The State of California or its officers or agents shall not be responsible for the accuracy or completeness of electronic copies of this plan sheet.*

LICENSED LANDSCAPE ARCHITECT — Robert B. Schott — Signature — 11-04-08 Renewal Date — 08-11-08 Date — STATE OF CALIFORNIA

*To accompany plans dated* 2-22-10

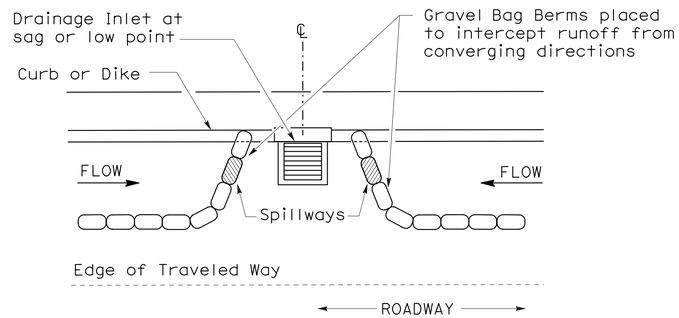


PLAN

## CONFIGURATION FOR SAG POINT INLET (GRAVEL BAG BERM)

## GRAVEL BAG BERM (TYPE 3A) SPACING TABLE

| SLOPE OF ROADWAY (PERCENT) | 1 to 3.9 | 4 to 5.9 | 6 to 7.9 | 8 to 10 | 10+ |
|---|---|---|---|---|---|
| INTERVAL BETWEEN BERM | 100′ | 75′ | 50′ | 25′ | 12′ |

For slope of less than 1%, install barriers only if erosion/sediment is prevalent

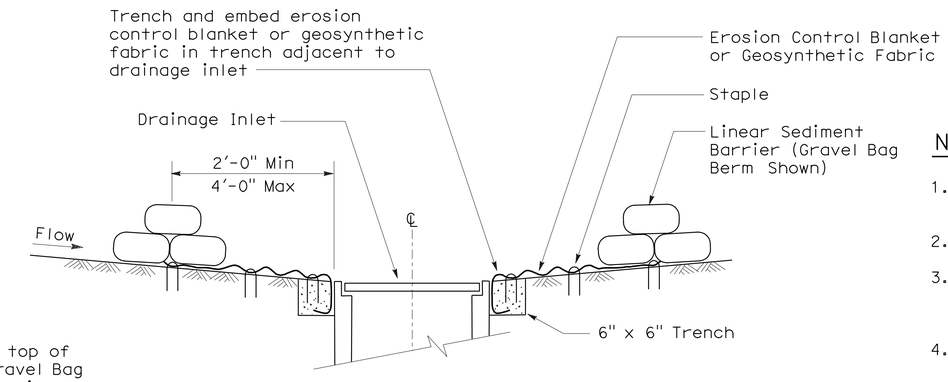


SECTION A-A

## NOTES:

1. Place safety cones adjacent to drainage inlet protection.
2. Dimensions may vary to fit field conditions.
3. Install a minimum of 3 gravel bag berms upstream of each drainage inlet to be protected.
4. Position erosion control blanket or geosynthetic fabric at edge of concrete apron and secure in trench.
5. Erosion control blanket or geosynthetic fabric is not required if the area adjacent to the drainage inlet is vegetated or paved.

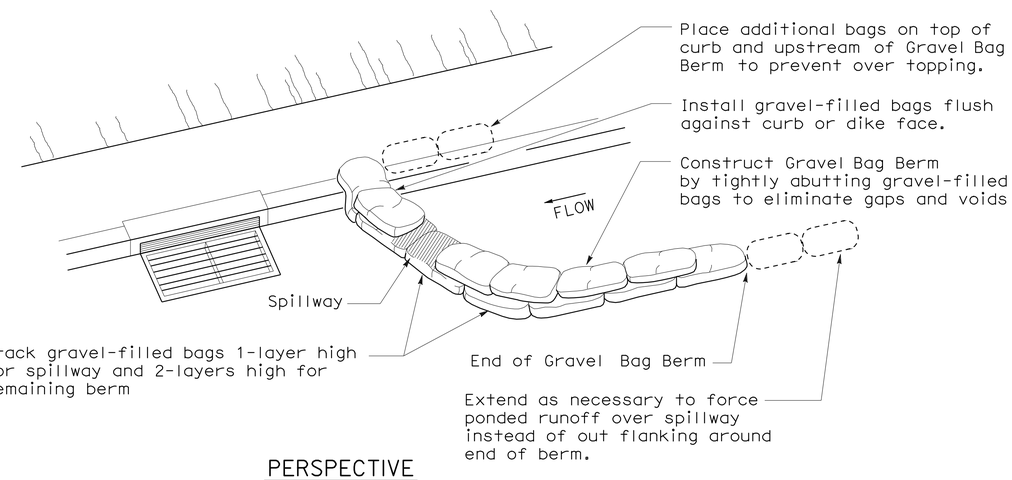


PERSPECTIVE

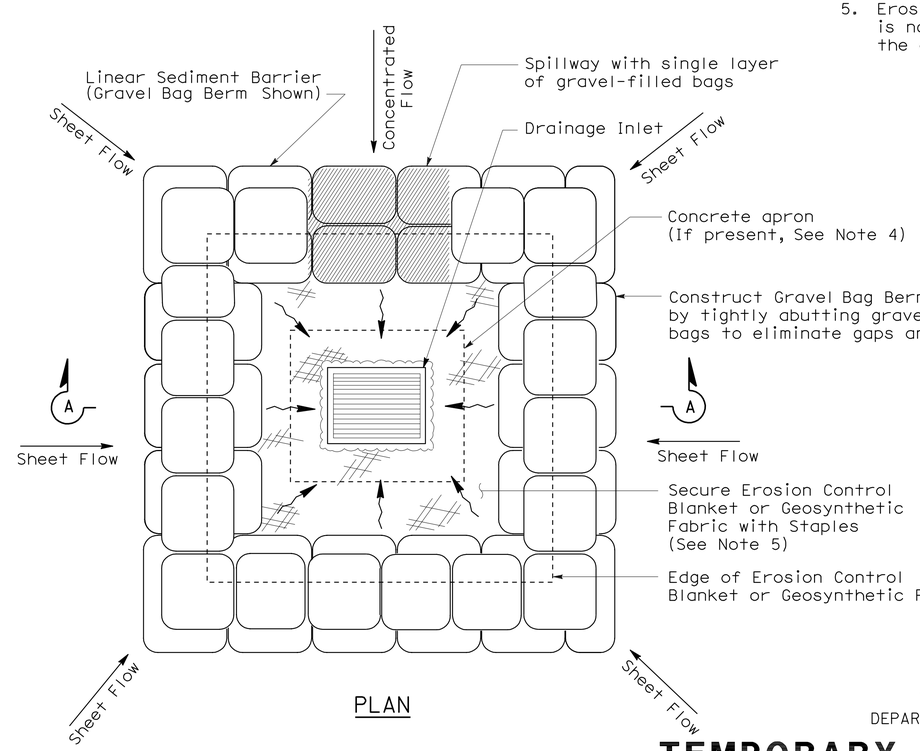


PLAN

## TEMPORARY DRAINAGE INLET PROTECTION (TYPE 3B)

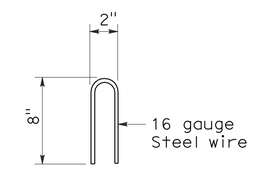


STAPLE DETAIL

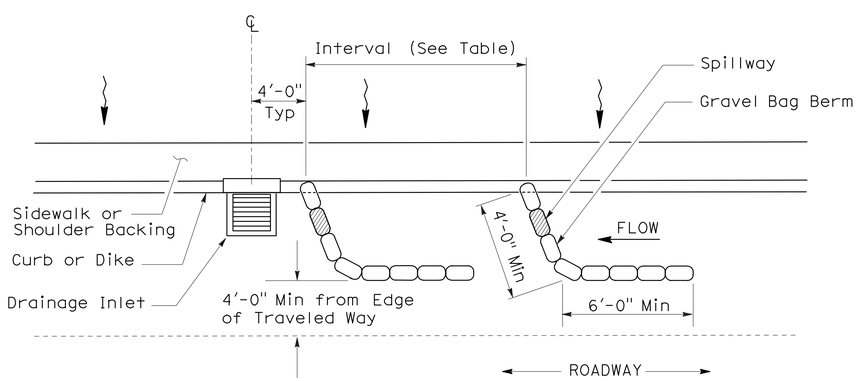


PLAN

## TEMPORARY DRAINAGE INLET PROTECTION (TYPE 3A) (GRAVEL BAG BERM)

STATE OF CALIFORNIA
DEPARTMENT OF TRANSPORTATION

# TEMPORARY WATER POLLUTION CONTROL DETAILS (TEMPORARY DRAINAGE INLET PROTECTION)

NO SCALE

NSP T62 DATED AUGUST 15, 2008 SUPPLEMENTS THE STANDARD PLANS BOOK DATED MAY 2006.

**NEW STANDARD PLAN NSP T62**

**2006 NEW STANDARD PLAN NSP T62**

7-11-08

| DIST | COUNTY | ROUTE | POST MILES TOTAL PROJECT | SHEET NO. | TOTAL SHEETS |
|---|---|---|---|---|---|
| 12 | Ora | 5 | 24.9/30.3 | 52 | 67 |

REGISTERED ELECTRICAL ENGINEER

October 5, 2007
PLANS APPROVAL DATE

REGISTERED PROFESSIONAL ENGINEER Jeffery G. McRae No. E14512 Exp. 6-30-08 ELECTRICAL STATE OF CALIFORNIA

*The State of California or its officers or agents shall not be responsible for the accuracy or completeness of electronic copies of this plan sheet.*

*To accompany plans dated* 2-22-10

2006 REVISED STANDARD PLAN RSP ES-1A

## ELECTROLIERS

| STANDARD TYPES |
|---|
| 15, 15D |
| 15 STRUCTURE |
| 21, 21D STRUCTURE |
| 30 |
| 31 |
| 32 |
| 35 |
| 36-20A |

High mast light pole

Double Arm lighting standard

Existing electrolier

Electrolier foundation (Future installation)

### NOTES:

1. Luminaires shall be 310 W HPS when installed on Type 21, 21D, 30, 31, 32, 35 and 36-20A Standards, unless otherwise specified. Luminaires shall be 200 W HPS when installed on other type standards or poles, unless otherwise specified.
2. Luminaires shall be the cutoff type, ANSI Type III medium cutoff lighting distribution, unless otherwise specified.
3. Variations noted adjacent to symbol on project plans.

Electrolier (see project notes or project plans)

Luminaire on wood pole

## STANDARD NOTES:

- AB — Abandon. If applied to conduit, remove conductors.
- BC — Install pull box in existing conduit run.
- BP — Pedestrian barricade, type as indicated on plan.
- CB — Install conduit into existing pull box.
- CC — Connect new and existing conduit. Remove existing conductors and install conductors as indicated.
- CF — Conduit to remain for future use. Remove conductors. Install pull wire or rope.
- DH — Detector handhole.
- FA — Foundation to be abandoned.
- IS — Install sign on signal mast arm.
- NS — No slip base on standard.
- PEC — Photoelectric control.
- PEU — Photoelectric unit.
- RC — Equipment or material to be removed and become the property of the Contractor.
- RE — Remove electrolier, fuses and ballast. Tape ends of conductors.
- RL — Relocate equipment.
- RR — Remove and reuse equipment.
- RS — Remove and salvage equipment.
- SC — Splice new to existing conductors.
- SD — Service disconnect.
- SF — Standard to remain for future use. Remove luminaire, pole conductors, fuses and ballast.
- TSP — Telephone service point.

## ABBREVIATIONS AND EQUIPMENT DESIGNATIONS

| PROPOSED | EXISTING | |
|---|---|---|
| BBS | bbs | Battery backup system |
| BC | bc | Bolt circle |
| C | C | Conduit |
| CCTV | cctv | Closed circuit television |
| CKT | ckt | Circuit |
| CMS | cms | Changeable message sign |
| DLC | dlc | Loop detector lead-in cable |
| EMS | ems | Extinguishable message sign |
| EVC | evc | Emergency vehicle cable |
| EVD | evd | Emergency vehicle detector |
| FB | fb | Flashing beacon |
| FBCA | fbca | Flashing beacon control assembly |
| FBS | fbs | Flashing beacon with slip base |
| FO | fo | Fiber optic |
| G | G | Ground (Equipment Grounding Conductor) |
| GFCI | GFCI | Ground fault circuit interrupt |
| HAR | har | Highway advisory radio |
| HEX | hex | Hexagonal |
| HPS | hps | High pressure sodium |
| IISNS | iisns | Internally illuminated street name sign |
| ISL | isl | Induction sign lighting |
| LED | led | Light emitting diode |
| LMA | lma | Luminaire mast arm |
| LPS | lps | Low pressure sodium |
| LTG | ltg | Lighting |
| LUM | lum | Luminaire |
| MAT | mat | Mast arm mounting vehicle signal faces, top attachment |
| MAS | mas | Mast arm mounting vehicle signal faces, side attachment |
| MAS-4A | mas-4A | Mast arm mounting vehicle signal faces, side attachment - 4 signal section |
| MAS-4B | mas-4B | |
| MAS-4C | mas-4C | |
| MAS-5A | mas-5A | Mast arm mounting vehicle signal faces, side attachment - 5 signal section |
| MAS-5B | mas-5B | |
| MC | mc | Mercury contactor |
| M/M | m/m | Multiple to multiple transformer |
| MT | mt | Conduit with pull wire or rope only |
| MTG | mtg | Mounting |
| | mv | Mercury vapor lighting fixture |
| N | N | Neutral (Grounded Conductor) |
| NC | NC | Normally closed |
| NO | NO | Normally open |
| PB | pb | Pull box |
| PEC | pec | Photoelectric control (Type I, II, III, IV or V as shown) |
| PED | ped | Pedestrian |
| PEU | peu | Photoelectric unit |
| PPB | ppb | Pedestrian push button |
| RL | | Relocated equipment |
| RM | rm | Ramp metering |
| SB | sb | Slip base |
| SIC | sic | Signal interconnect cable |
| SIG | sig | Signal |
| SMA | sma | Signal mast arm |
| SNS | sns | Street name sign |
| SP | sp | Service point |
| TDC | tdc | Telephone demarcation cabinet |
| TMS | tms | Traffic monitoring station |
| TOS | tos | Traffic Operations System |
| VEH | veh | Vehicle |
| XFMR | xfmr | Transformer |
| COMM | comm | Communication |
| RWIS | rwis | Roadway weather information system |

## SOFFIT AND WALL MOUNTED LUMINAIRES

Pendant, 70 W HPS unless otherwise specified.

Flush, 70 W HPS unless otherwise specified.

Wall surface, 70 W HPS unless otherwise specified.

Existing soffit or wall luminaire to remain unmodified.

Existing soffit or wall luminaire to be modified as specified.

### NOTE:

Arrow indicates "street side" of luminaire.

STATE OF CALIFORNIA
DEPARTMENT OF TRANSPORTATION

# ELECTRICAL SYSTEMS (SYMBOLS AND ABBREVIATIONS)

NO SCALE

RSP ES-1A DATED OCTOBER 5, 2007 SUPERSEDES STANDARD PLAN ES-1A DATED MAY 1, 2006 - PAGE 400 OF THE STANDARD PLANS BOOK DATED MAY 2006.

**REVISED STANDARD PLAN RSP ES-1A**

| DIST | COUNTY | ROUTE | POST MILES TOTAL PROJECT | SHEET NO. | TOTAL SHEETS |
|---|---|---|---|---|---|
| 12 | Ora | 5 | 24.9/30.3 | 53 | 67 |

REGISTERED ELECTRICAL ENGINEER

October 5, 2007
PLANS APPROVAL DATE

REGISTERED PROFESSIONAL ENGINEER Jeffery G. McRae No. E14512 Exp. 6-30-08 ELECTRICAL STATE OF CALIFORNIA

*The State of California or its officers or agents shall not be responsible for the accuracy or completeness of electronic copies of this plan sheet.*

*To accompany plans dated* 2-22-10

## CONDUIT

| PROPOSED | EXISTING | |
|---|---|---|
| | | Lighting Conduit, unless otherwise indicated or noted |
| | | Traffic signal conduit |
| C | c | Communication conduit |
| T | t | Telephone conduit |
| F | f | Fire alarm conduit |
| FO | fo | Fiber optic conduit |
| | | Conduit termination (RSP ES-9A C) |
| R | r | Conduit riser in/on structure or service pole |

## SERVICE EQUIPMENT

| PROPOSED | EXISTING | |
|---|---|---|
| OH | oh | Overhead lines |
| U | U | Wood pole "U" indicates utility owned |
| | | Pole guy with anchor |
| | | Utility transformer - ground mounted |
| III | | Service equipment enclosure type |
| | | Service equipment enclosure door indicates front of enclosure |
| T | t | Telephone demarcation cabinet |

## POLE-MOUNTED SERVICE DESIGNATION

Type of installation

TYPE H SERVICE - 28'-10" ← Pole height above grade

## ILLUMINATED OVERHEAD SIGN

| PROPOSED | EXISTING | |
|---|---|---|
| | | Overhead sign - Single post |
| | | Overhead sign - Two post |
| | | Overhead sign - Mounted on structure |
| | | Overhead sign with electrolier |

## SIGNAL EQUIPMENT

| PROPOSED | EXISTING | |
|---|---|---|
| | | Pedestrian signal face |
| | | Pedestrian push button post |
| | | Pedestrian barricade |
| | | Vehicle signal face (with backplate, 3-Section: red, yellow and green) |
| | | Vehicle signal face with angle visors |
| PV | PV | Modifications of basic symbols: "L" indicates all non-arrow sections louvered "LG" indicates louvered green section only "PV" indicates 12" programmed visibility sections "8" indicates all 8" sections (only when specified) |
| | | Type 15TS and Vehicle signal face |
| | | Vehicle signal face with red, yellow and green left arrow sections |
| | | Vehicle signal face with red and yellow sections and up green arrow |
| | | Vehicle signal face (5 Section) with red, yellow and green sections and yellow and green right arrows |
| | | Type 1 Standard and attached vehicle signal faces |
| | | Standard with signal mast arm only and attached vehicle signal faces and internally illuminated street name sign |
| | | Type 33 Standard, Left-turn vehicle signal face and sign |
| | | Standard with luminaire and signal mast arms and attached vehicle signal faces |
| | | Cantilever flashing beacon Type 9 Frame, with a sign unless otherwise specified or indicated |
| | | Type 15-FBS Standard with two vehicle signal face sections with lens, backplate and visor with a sign |
| R | Y | Flashing beacon. One vehicle signal face section with lens, backplate and visor. "R" indicates red indication, "Y" indicates yellow indication |
| | | Controller assembly. Door indicates front of cabinet |

## SIGNAL EQUIPMENT Cont

| PROPOSED | EXISTING | |
|---|---|---|
| | | Guard post |
| | | Type 1 Standard with "Meter On" sign |
| | | Emergency Vehicle detector |

## NOTES:

1. All signal sections shall be 12" unless shown otherwise.
2. Signal heads shall be provided with backplates unless shown otherwise.
3. Signal indication shall be LED.

STATE OF CALIFORNIA
DEPARTMENT OF TRANSPORTATION

# ELECTRICAL SYSTEMS (SYMBOLS AND ABBREVIATIONS)

NO SCALE

RSP ES-1B DATED OCTOBER 5, 2007 SUPERCEDES STANDARD PLAN ES-1B DATED MAY 1, 2006 - PAGE 401 OF THE STANDARD PLANS BOOK DATED MAY 2006.

**REVISED STANDARD PLAN RSP ES-1B**

**2006 REVISED STANDARD PLAN RSP ES-1B**

7-10-07

| DIST | COUNTY | ROUTE | POST MILES TOTAL PROJECT | SHEET NO. | TOTAL SHEETS |
|---|---|---|---|---|---|
| 12 | Ora | 5 | 24.9/30.3 | 54 | 67 |

REGISTERED ELECTRICAL ENGINEER

October 5, 2007
PLANS APPROVAL DATE

REGISTERED PROFESSIONAL ENGINEER Jeffery G. McRae No. E14512 Exp. 6-30-08 ELECTRICAL STATE OF CALIFORNIA

*The State of California or its officers or agents shall not be responsible for the accuracy or completeness of electronic copies of this plan sheet.*

*To accompany plans dated* 2-22-10

# EQUIPMENT IDENTIFICATION

## ILLUMINATED SIGN IDENTIFICATION NUMBER:

Sign No. 12345 — Sign number - Place on post or structure

10 ISL SCI 1.0

- 1.0 — Transformer rating (kVA)
- SCI — Lighting control type
- ISL — Number and type of fixtures

Do NOT place on standard or structure

## ELECTROLIER OR EQUIPMENT IDENTIFICATION NUMBER:

12345 - 15'-0"

- 15'-0" — Mast arm length, if shown. Do not place on standard or structure.
- 12345 — Equipment number - Place on standard or structure. Existing equipment numbers are shown in parenthesis

## CONDUIT AND CONDUCTOR IDENTIFICATION:

1½"C, 2#10, 15#14, 2 DLC

- 2#10, 15#14, 2 DLC — Number and size of conductors and cables
- 1½"C — Size of conduit in inches

| | |
|---|---|
| Ø1, Ø2, Ø2P, etc. | Traffic phase identification for signal faces, detectors and phase diagrams |
| 1 2 3 | Project note numbers |
| A B C | Equipment description, installation or item numbers |
| 1 2 3 | Conduit run numbers |

## SIGNAL AND LIGHTING STANDARD (TYPICAL DESIGNATION):

19A - 3 - 100

- 100 — Wind velocity = 100 mph
- 3 — Case 3 arm loading
- 19A — Standard type
- Standard Plan sheet number
- Detail number or letter

## MISCELLANEOUS EQUIPMENT

| PROPOSED | EXISTING | |
|---|---|---|
| CMS | cms | Changeable message sign |
| | | Closed circuit television camera |
| | | Highway advisory radio pole and antenna |
| EMS | ems | Extinguishable message sign |
| M V | m v | Detection device<br>M = Microwave sensor<br>V = Video image sensor |

## WIRING DIAGRAM LEGEND

| | |
|---|---|
| P | Pole |
| CB | Circuit breaker |
| A | Ampere |
| V | Volt |
| M | Metered |
| UM | Unmetered |
| NB | Neutral bus |
| GB | Ground bus |
| G | Equipment grounding conductor |
| N | Grounded conductor (Neutral) |

- External conductor
- Conductor or bus
- Tie point
- Contactor coil
- Contactor, Contact NO
- Terminal blocks
- Contactor, Contact NC
- Enclosure bond
- Grounding electrode
- Circuit breaker
- Receptacle

## PULL BOXES

| PROPOSED | EXISTING | |
|---|---|---|
| | | Pull box-No. 5 unless otherwise indicated or noted. |
| 3 | 9A(21) | Pull box-Additional designations or descriptions |

3 = No. 3½ pull box
5 = No. 5 pull box
6 = No. 6 pull box
7 = No. 7 (Ceiling pull box)
8 = No. 8 (Pendant soffit pull box)
9 = No. 9 pull box
9A = No. 9A pull box

(C) = Communications pull box
(E) = Pull box with extension
(S) = Sprinkler control pull box
(21) = Anchor bolts and conduit for future installation of Type 21 Standard
(T) = Traffic pull box

## VEHICLE DETECTORS

5 J 9 U

- U — U = Upper, L = Lower
- 9 — Slot number in input file
- J — Input file (I or J)
- 5 — Phase

Vehicle detector designation

| PROPOSED | EXISTING | |
|---|---|---|
| | | Type A detector loop. Outline of sawcut shown. |
| | | Type B detector loop. Outline of sawcut shown. |
| | | Type C detector loop. Outline of sawcut shown. |
| | | Type D detector loop. Outline of sawcut shown. |
| | | Type E detector loop. Outline of sawcut shown. |
| | | Type Q detector loop. Outline of sawcut shown. |
| | | Magnetic detector |
| DH | dh | Detector handhole |
| | | Microwave or video detection zone |

STATE OF CALIFORNIA
DEPARTMENT OF TRANSPORTATION

# ELECTRICAL SYSTEMS (SYMBOLS AND ABBREVIATIONS)

NO SCALE

RSP ES-1C DATED OCTOBER 5, 2007 SUPERCEDES STANDARD PLAN ES-1C DATED MAY 1, 2006 - PAGE 402 OF THE STANDARD PLANS BOOK DATED MAY 2006.

**REVISED STANDARD PLAN RSP ES-1C**

**2006 REVISED STANDARD PLAN RSP ES-1C**

| DIST. | COUNTY | ROUTE | POST MILES TOTAL PROJECT | SHEET NO. | TOTAL SHEETS |
|---|---|---|---|---|---|
| 12 | Ora | 5 | 24.9/30.3 | 55 | 67 |

## SHEET INDEX


ARCHITECTURAL

TITLE SHEET
A-0 SITE PLAN
A0-1 ARCHITECTURAL ABBREVIATIONS & SYMBOLS
A0-3.3 ACCESSIBILITY STANDARD DETAILS
A-1 FLOOR PLAN, ELEVATION, SECTION & DETAILS

STRUCTURAL

ST-1 CONCRETE NOTES
ST-2 PRE-ENGINEERED COMMUNICATION VAULT FOUNDATION PLAN & SECTIONS
ST-3 PRE-ENGINEERED COMMUNICATION VAULT FOUNDATION PLAN & SECTIONS

ELECTRICAL

EE-0 ELECTRICAL LEGEND
EE-1.1 TITLE 24 COMPLIANCE FORM 1
EE-1.2 TITLE 24 COMPLIANCE FORM 2
EE-2 POWER PLAN 1 AND 2
EE-3 LIGHTING AND INTRUSION ALARM SYSTEM PLAN
EE-4 PANEL SCHEDULES


## BUILDING DATA

CONSTRUCTION AREA: 14'-6" X 11'-6" = 167.00 SQ. FT.
OCCUPANCY: B
TYPE OF CONSTRUCTION: TYPE II-B
2007 CBC: CALIFORNIA BUILDING CODE
2007 CEC: CALIFORNIA ELECTRICAL CODE
2007 CFC: CALIFORNIA FIRE CODE
CALIFORNIA ENERGY CODE &
CURRENT EDITION OF ADA:
AMERICANS W/ DISABILITIES ACT

LICENSED ARCHITECT — DATE
Licensed Architect

LICENSED ARCHITECT — CARLOS A. SANCHEZ — No. C-15202 Ren. 12/31/11 — STATE OF CALIFORNIA

2-22-10
PLANS APPROVAL DATE

*The State of California or its officers or agents shall not be responsible for the accuracy or completeness of electronic copies of this plan sheet.*

**ACCESSIBILITY DESIGN APPROVAL STAMP**
**DOT / DES / OTA**
**12-0k1501**
DISTRICT - EA
Reviewed by: YA WANG
Date: 02-24-10

**CALIFORNIA STATE FIRE MARSHAL APPROVED**
Approval of this plan does not authorize or approve any omission or deviation from applicable regulations. Final approval is subject to field inspection. One set of approved plans shall be available on the project site at all times.
Reviewed by: MIKE TANAKA
Approval date: 12-14-09

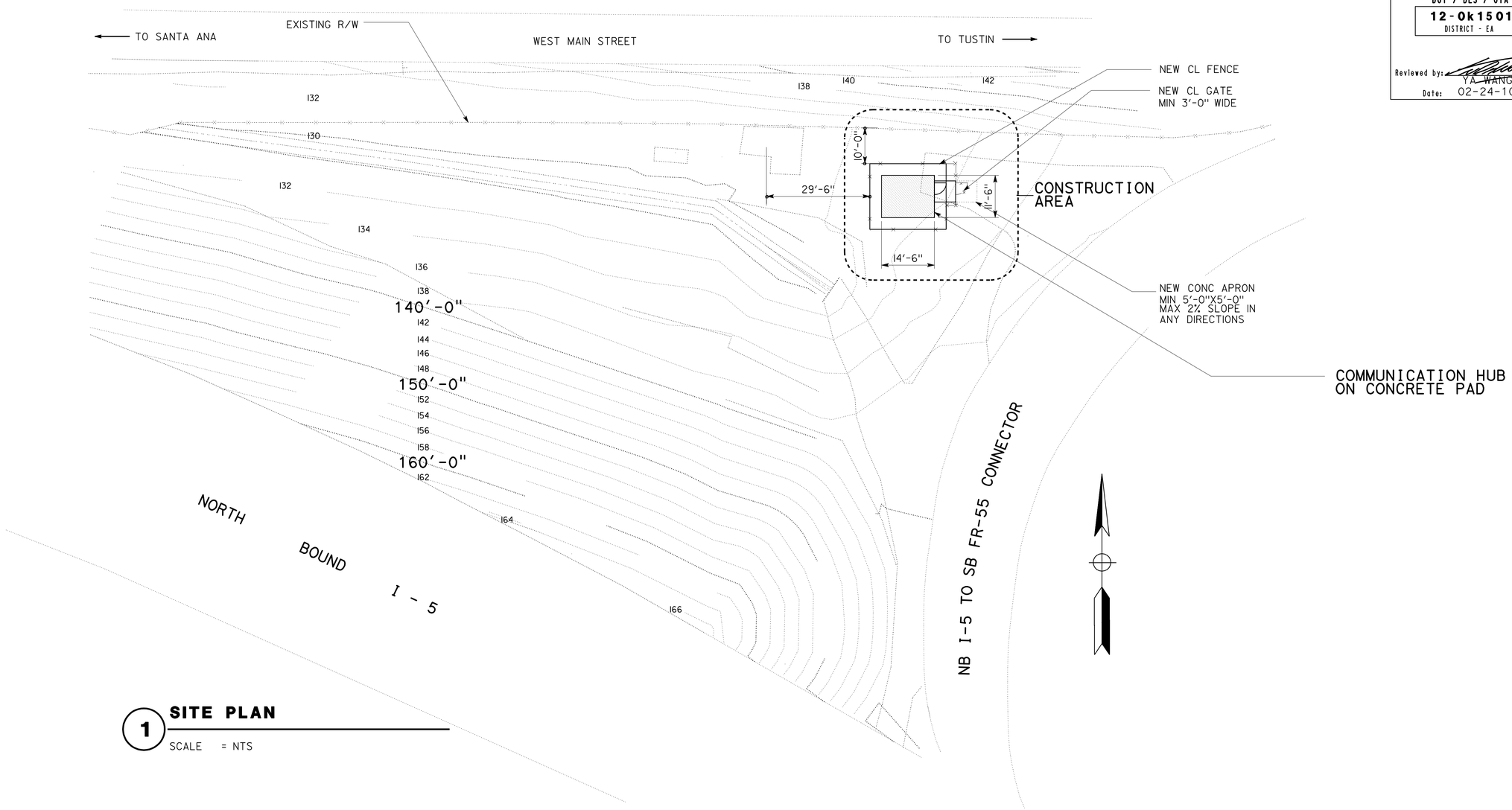


**1 SITE PLAN**
SCALE = NTS

| | | | | | | | |
|---|---|---|---|---|---|---|---|
| R.E. Travis DESIGN SUPERVISOR | DESIGNERS: C. SANCHEZ | CHECKED BY: | DESIGN | BY C SANCHEZ | CHECKED Dave Lane | STATE OF CALIFORNIA DEPARTMENT OF TRANSPORTATION | DIVISION OF ENGINEERING SERVICES ARCHITECTURAL AND STRUCTURAL DESIGN |
| DESIGN ARCHITECT | DRAWN BY: C. SANCHEZ | STRUCTURAL REVIEW: | DETAILS | BY | CHECKED Dave Lane | | |
| | | | QUANTITIES | BY - | CHECKED - | | |

BRIDGE NO. 4550191
POST MILE 30.3

**DISTRICT 12 COMMUNICATION HUB**
SITE PLAN

SHEET **A-0**

A_0_site.dgn
DS OSD Imperial Rev. 11/98 01-MAR-2010 13:03

ORIGINAL SCALE IN INCHES FOR REDUCED PLANS 0 1 2 3

CU 12375
EA 0K1501

DISREGARD PRINTS BEARING EARLIER REVISION DATES → 09-14-09
REVISION DATES (PRELIMINARY STAGE ONLY) SHEET OF

01-MAR-2010 13:03
A_0_site.dgn

| DIST. | COUNTY | ROUTE | POST MILES TOTAL PROJECT | SHEET NO. | TOTAL SHEETS |
|---|---|---|---|---|---|
| 12 | Ora | 5 | 24.9/30.3 | 56 | 67 |

LICENSED ARCHITECT — DATE
Licensed Architect

LICENSED ARCHITECT — CARLOS A. SANCHEZ — No. C-15202 Ren. 12/31/11 — STATE OF CALIFORNIA

2-22-10
PLANS APPROVAL DATE

*The State of California or its officers or agents shall not be responsible for the accuracy or completeness of electronic copies of this plan sheet.*

**ACCESSIBILITY DESIGN APPROVAL STAMP**
**DOT / DES / OTA**
**12-0k1501**
DISTRICT - EA
Reviewed by: YA WANG
Date: 02-24-10

**CALIFORNIA STATE FIRE MARSHAL APPROVED**
Approval of this plan does not authorize or approve any omission or deviation from applicable regulations. Final approval is subject to field inspection. One set of approved plans shall be available on the project site at all times.
Reviewed by: MIKE TANAKA
Approval date: 12-14-09

# ARCHITECTURAL ABBREVIATIONS

| | |
|---|---|
| & | AND |
| ∟ | ANGLE |
| ℄ | CENTER LINE |
| ∅ | DIAMETER OR ROUND |
| □ | SQUARE |
| d | PENNY |
| ° | DEGREE |
| A/C | AIR CONDITIONING |
| AC | ASPHALT CONCRETE |
| AB | ANCHOR BOLT |
| ABV | ABOVE |
| ACOUS | ACOUSTICAL |
| ADJ | ADJUSTABLE |
| ALT | ALTERNATE |
| ALUM | ALUMINUM |
| APA | AMERICAN PLYWOOD ASSOCIATION |
| ARCH | ARCHITECTURAL, ARCHITECT |
| ASPH | ASPHALT |
| BD | BOARD |
| BIT | BITUMINOUS |
| BLDG | BUILDING |
| BLK | BLOCK |
| BLKG | BLOCKING |
| BM | BEAM |
| BN | BOUNDARY NAILING |
| BOT | BOTTOM |
| BR | BRIDGE |
| BTWN | BETWEEN |
| BUR | BUILT-UP-ROOFING |
| CJ | CONTROL JOINT |
| CL | CHAIN LINK |
| CAB | CABINET |
| CB | CATCH BASIN |
| CEM | CEMENT |
| CER | CERAMIC |
| CIP | CAST IN PLACE |
| CKBD | CHALKBOARD |
| CLG | CEILING |
| CMU | CONCRETE MASONRY UNIT |
| CLO | CLOSET |
| CLR | CLEAR |
| COL | COLUMN |
| CONC | CONCRETE |
| CONN | CONNECTION |
| CONST | CONSTRUCTION |
| CONT | CONTINUOUS |
| CORR | CORRIDOR |
| CPT | CARPET |
| CT | CERAMIC TILE |
| CTR | CENTER |
| CTSK | COUNTERSUNK |
| CY | CUBIC YARD |
| DBL | DOUBLE |
| DEPT | DEPARTMENT |
| DET | DETAIL |
| DF | DOUGLAS FIR |
| DIA | DIAMETER |
| DIM | DIMENSION |
| DN | DOWN |
| DP | DEEP |
| DR | DOOR |
| DS | DOWNSPOUT |
| DWG | DRAWING |
| DWR | DRAWER |
| (E) | EXISTING |
| E | EAST |
| EA | EACH |
| EHD | ELECTRIC HAND DRYER |
| EJ | EXPANSION JOINT |
| EL | ELEVATION (HEIGHT) |
| ELECT | ELECTRICAL |
| ELEV | ELEVATION (VIEW) |
| ELVR | ELEVATOR |
| EMER | EMERGENCY |
| ENCL | ENCLOSURE |
| EQ | EQUAL |
| EPB | ELECTRICAL PANELBOARD |
| EQUIP | EQUIPMENT |
| ESCL | ESCALATOR |
| EWC | ELECTRIC WATER COOLER |
| EXP | EXPANSION |
| EXPO | EXPOSED, EXPOSURE |
| EXT | EXTERIOR |
| FD | FLOOR DRAIN |
| FDN | FOUNDATION |
| FE | FIRE EXTINGUISHER |
| FEC | FIRE EXTINGUISHER CABINET |
| FG | FINISH GRADE |
| FH | FIRE HYDRANT |
| FHC | FIRE HOSE CABINET |
| FHMS | FLATHEAD METAL SCREW |
| FHWS | FLATHEAD WOOD SCREW |
| FIN | FINISH |
| FJ | FLOOR JOIST |
| FLASH | FLASHING |
| FLR | FLOOR |
| FLUOR | FLUORESCENT |
| FOC | FACE OF CONCRETE |
| FOF | FACE OF FINISH |
| FOM | FACE OF MASONRY |
| FOS | FACE OF STUD |
| FRP | FIBERGLASS REINFORCED PANEL |
| FT | FEET, FOOT |
| FTG | FOOTING |
| FURR | FURRING |
| FWY | FREEWAY |
| GA | GAUGE |
| GAL | GALLON |
| GALV | GALVANIZED |
| GB | GRAB BAR |
| GI | GALVANIZED IRON |
| GL | GLASS |
| GLM | GLUE LAMINATED MEMBER |
| GLZ | GLAZING |
| GR | GRADE |
| GSM | GALVANIZED SHEET METAL |
| GYBD | GYPSUM BOARD |
| GYP SHTG | GYPSUM SHEATHING |
| HB | HOSE BIB |
| HC | HOLLOW CORE |
| HD | HEAD, HOLD DOWN |
| HDR | HEADER |
| HDWD | HARDWOOD |
| HDWR | HARDWARE |
| HEX | HEXAGONAL |
| HF | HEMLOCK-FIR |
| HGR | HANGER |
| HM | HOLLOW METAL |
| HORIZ | HORIZONTAL |
| HP | HIGH POINT |
| HR | HOUR |
| HSB | HIGH STRENGTH BOLT |
| HT | HEIGHT |
| HVAC | HEATING, VENTILATING, AIR CONDITIONING |
| HWY | HIGHWAY |
| ID | INSIDE DIAMETER |
| IN | INCH |
| INSUL | INSULATION |
| INT | INTERIOR |
| JAN | JANITOR |
| JB | JUNCTION BOX |
| JH | JOIST HANGER |
| JST | JOIST |
| JT | JOINT |
| KIT | KITCHEN |
| LAB | LABORATORY |
| LAV | LAVATORY |
| LBS | POUNDS |
| LF | LINEAR FEET |
| LKR | LOCKER |
| LPG | LIQUIFIED PETROLEUM GAS |
| M | METER |
| MAT | MATERIAL |
| MAX | MAXIMUM |
| MB | MACHINE BOLT |
| MBR | MEMBER |
| MECH | MECHANICAL |
| MEMB | MEMBRANE |
| MET | METAL |
| MFR | MANUFACTURER |
| MH | MAN HOLE |
| MIN | MINIMUM |
| MIR | MIRROR |
| MISC | MISCELLANEOUS |
| MIW | MALLEABLE IRON WASHER |
| MM | MILLIMETER |
| MO | MASONRY OPENING |
| MTD | MOUNTED |
| MUL | MULLION |
| N | NORTH |
| ND | NAPKIN DISPOSAL |
| NIC | NOT IN CONTRACT |
| NO | NUMBER |
| NOM | NOMINAL |
| NTS | NOT TO SCALE |
| OBSC | OBSCURE |
| OC | ON CENTER |
| OD | OUTSIDE DIAMETER |
| OFF | OFFICE |
| OH | OPPOSITE HAND |
| OHD | OVERHEAD |
| OHWS | OVALHEAD WOOD SCREW |
| OPNG | OPENING |
| OPP | OPPOSITE |
| OPT | OPTION, OPTIONAL |
| P | PITCH |
| PB | POST BASE |
| PC | POST CAP |
| PCC | PORTLAND CEMENT CONCRETE |
| PH | PHILLIPS HEAD |
| PL | PLATE |
| PLAM | PLASTIC LAMINATE |
| PLAS | PLASTER |
| PLWD | PLYWOOD |
| PMF | PRESSED METAL FRAME |
| PR | PAIR |
| PRTN | PARTITION |
| PT | POINT |
| PTD | PAPER TOWEL DISPENSER |
| PTD/R | COMBINATION PTD & WASTE RECEPTACLE |
| PVC | POLYVINYL CHLORIDE |
| PWB | PREFABRICATED WOOD I BEAM |
| QT | QUARRY TILE |
| (R) | RELOCATED |
| R | RADIUS, RISER |
| R/W | RIGHT OF WAY |
| RD | ROOF DRAIN |
| RDWD | REDWOOD |
| REF | REFERENCE |
| REFG | REFRIGERATOR |
| REINF | REINFORCED(ING) |
| REQ | REQUIRED |
| RFG | ROOFING |
| RFSWN | ROUGHSAWN |
| RH | ROUND HEAD |
| RHWS | ROUNDHEAD WOOD SCREW |
| RJ | ROOF JOIST |
| RM | ROOM |
| RO | ROUGH OPENING |
| RSWN | RESAWN |
| RTE | ROUTE |
| RWL | RAINWATER LEADER |
| S | SOUTH |
| SC | SOLID CORE |
| SCHED | SCHEDULE |
| SD | SOAP DISPENSER |
| SDST | SELF DRILLING SELF TAPPING |
| SF | SQUARE FEET |
| SH | SHELF |
| SHWR | SHOWER |
| SHT | SHEET |
| SHTG | SHEATHING |
| SIM | SIMILAR |
| SMS | SHEET METAL SCREW |
| SOHD | SECTIONAL OVERHEAD DOOR |
| SPEC | SPECIFICATION |
| SPS | STRUCTURAL PLYWOOD SHEATHING |
| SQ | SQUARE |
| SRRA | SAFETY ROADSIDE REST AREA |
| SS | SERVICE SINK |
| SST | STAINLESS STEEL |
| STA | STATION |
| STAG | STAGGER |
| STD | STANDARD |
| STL | STEEL |
| STOR | STORAGE |
| STRUC | STRUCTURAL |
| SUSP | SUSPENDED |
| T | TREAD |
| T&G | TONGUE & GROOVE |
| TB | TOLL BOOTH |
| TEL | TELEPHONE |
| TEMP | TEMPERED |
| TER | TERRAZZO |
| THK | THICK |
| THLD | THRESHOLD |
| TJ | TOOLED JOINT |
| TKBD | TACKBOARD |
| TN | TOE NAIL |
| TOC | TOP OF CURB OR CONCRETE |
| TOP | TOP OF PAVEMENT |
| TOS | TOE OF SLOPE |
| TOT | TOTAL |
| TOW | TOP OF WALL |
| TS | TUBULAR STEEL |
| TSCD | TOILET SEAT COVER DISPENSER |
| TTD | TOILET TISSUE DISPENSER |
| TYP | TYPICAL |
| UNF | UNFINISHED |
| UON | UNLESS OTHERWISE NOTED |
| UR | URINAL |
| VAR | VARIES |
| VCT | VINYL COMPOSITION TILE |
| VERT | VERTICAL |
| VEST | VESTIBULE |
| VR | VENT RISER |
| VTR | VENT THROUGH ROOF |
| W | WEST |
| W/ | WITH |
| W/O | WITHOUT |
| WC | WATER CLOSET |
| WD | WOOD |
| WDW | WINDOW |
| WH | WATER HEATER |
| WP | WORKING POINT |
| WR | WATER RESISTANT |
| WSCT | WAINSCOT |
| WT | WEIGHT |
| WTPR | WATERPROOFING |
| WWF | WELDED WIRE FABRIC |
| YD | YARD |

# SYMBOLS

EARTH
AC PAVING
PARTITION
EXISTING CONSTRUCTION
EXISTING TO BE REMOVED
CONCRETE
PRECAST CONCRETE
MASONRY UNIT
STEEL
SAND/MORTAR/PLASTER
BATT INSULATION
RIGID INSULATION
EXPANSION JOINT FILLER
PLYWOOD
GYPSUM BOARD
CONTINUOUS WOOD FRAMING
WOOD BLOCKING
FINISH WOOD
102 — ROOM DESIGNATION
3 — DOOR DESIGNATION
A — WINDOW DESIGNATION
L2 — LOUVER DESIGNATION
ELEVATION
MATCH LINE (SHADED PORTION IS THE SIDE CONSIDERED)
N / W A12 E / S — INTERIOR ELEVATION IDENTIFICATION; SHADED PORTION INDICATES ELEVATION; SHEET NUMBER

2 / A14 — ELEVATION INDENTIFICATION; SHEET NUMBER
C / A12 — SECTION LETTER; SHEET NUMBER
2 / A21 — DETAIL NUMBER; SHEET NUMBER
2 / — DETAIL NUMBER; SAME SHEET
A / 1 — GRID LINE (LETTER IN ONE DIRECTION, NUMBERS IN OTHER DIRECTION)

Reviewed by:
Approval date:

## ACCESSIBILITY NOTES

1. PEDESTRIAN PATH OF TRAVEL FROM SITE ENTRANCE ON PROPERTY LINE TO NEW BLDG. IS NOT REQUIRED, AS NO PUBLIC TRANSPORTATION IS AVAILABLE ON THE ADJACENT STREETS, AND ALL USERS AND ANY VISITORS SHALL ARRIVE BY PRIVATE VEHICLES ONLY.
2. ANY ACCESSIBLE PARKING SPACE IS NOT REQUIRED, AS NO PARKING SPACE IS DESIGNATED/ IDENTIFIED ON THE SITE.
3. VEHICLE MAY PARK NEXT TO NEW CONC. APRON (OUTSIDE NEW CL GATE ) TO ACCESS NEW BLDG.
4. ANY LEVEL CHANGE BETWEEN NEW CONC. APRON (OUTSIDE NEW CL GATE) AND ADJACENT GRADE, AND BETWEEN TWO NEW CONC. APRONS ON BOTH SIDES OF NEW CL GATE SHALL BE MAX. 1/2" W/MAX. 1:2 SLOPE IN THE DIRECTION OF TRAVEL. LEVEL CHANGE NOT EXCEEDING 1/4" MAY BE VERTICAL.
5. ANY LEVEL CHANGE AT THE DOORWAY, INCLUDING THRESHOLD THICKNESS, SHALL BE MAX. 1/2" W/MAX. 1:2 SLOPE. LEVEL CHANGE NOT EXCEEDING 1/4" MAY BE VERTICAL.
6. NEW FENCE GATE SHALL HAVE DISABLED ACCESSIBLE HARDWARE NOT REQUIRING TIGHT GRASPING, PINCHING, OR TWISTING OF THE WRIST TO OPERATE. HARDWARE SHALL BE CENTERED BETWEEN 34 TO 44 INCHES ABOVE CONC. FLOOR.

| | BY | CHECKED |
|---|---|---|
| DESIGN | C SANCHEZ | DOUG LOWE |
| DETAILS | | DOUG LOWE |
| QUANTITIES | - | - |

STATE OF CALIFORNIA
DEPARTMENT OF TRANSPORTATION

DIVISION OF ENGINEERING SERVICES
ARCHITECTURAL AND STRUCTURAL DESIGN

BRIDGE NO. 4550191
POST MILE 30.3

**DISTRICT 12 COMMUNICATION HUB**
ARCHITECTURAL ABBREVIATIONS & SYMBOLS

SHEET **A0-1**

a0-01_abbr.dgn
DS OSD Imperial Rev. 11/98 01-MAR-2010 13:03

ORIGINAL SCALE IN INCHES FOR REDUCED PLANS 0 1 2 3

CU 12375
EA 0K1501

DISREGARD PRINTS BEARING EARLIER REVISION DATES → 09-14-09

REVISION DATES (PRELIMINARY STAGE ONLY) SHEET OF

01-MAR-2010 13:03

a0-01_abbr.dgn

| DIST. | COUNTY | ROUTE | POST MILES TOTAL PROJECT | SHEET NO. | TOTAL SHEETS |
|---|---|---|---|---|---|
| 12 | Ora | 5 | 24.9/30.3 | 57 | 67 |

LICENSED ARCHITECT — DATE 01-02-10

LICENSED ARCHITECT Y.A. WANG No. C14891 Exp. 11-30-11 STATE OF CALIFORNIA

2-22-10
PLANS APPROVAL DATE

*The State of California or its officers or agents shall not be responsible for the accuracy or completeness of electronic copies of this plan sheet.*

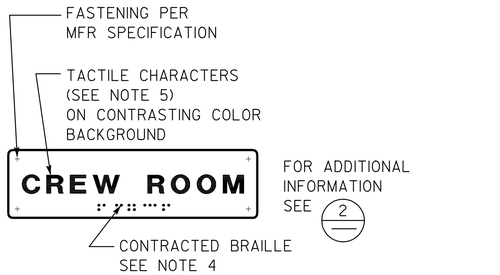


## 1 ROOM IDENTIFICATION SIGN

INSTALL PER DETAIL 5
TEXT VARIES
SEE PLANS, EXT ELEVATIONS, OR DOOR SCHEDULE FOR LOCATIONS AND TEXT
SEE DETAIL 7 FOR TEXT MOUNTING HEIGHT

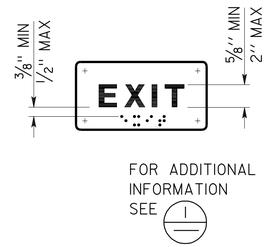


## 2 INTERIOR EXIT SIGN

INSTALL PER DETAIL 5
TEXT MAY VARY
SEE PLANS, OR DOOR SCHEDULE FOR LOCATIONS AND TEXT
SEE DETAIL 7 FOR TEXT MOUNTING HEIGHT

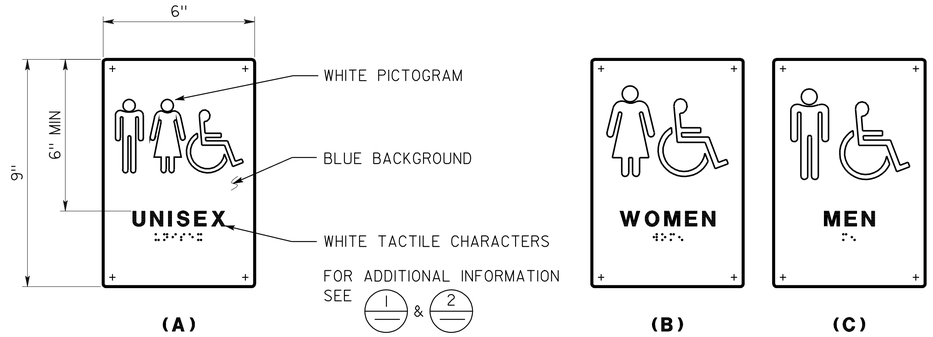


## 3 RESTROOM SIGNS

INSTALL PER DETAIL 5
SEE DETAIL 7 FOR TEXT MOUNTING HEIGHT

| ACCESSIBILITY DESIGN APPROVAL STAMP DOT / DES / OTA | CALIFORNIA STATE FIRE MARSHAL APPROVED |
|---|---|
| 12-0k1501 DISTRICT - EA | Approval of this plan does not authorize or approve any omission or deviation from applicable regulations. Final approval is subject to field inspection. One set of approved plans shall be available on the project site at all times. |
| Reviewed by: YA WANG | Reviewed by: MIKE TANAKA |
| Date: 02-24-10 | Approval date: 12-14-09 |

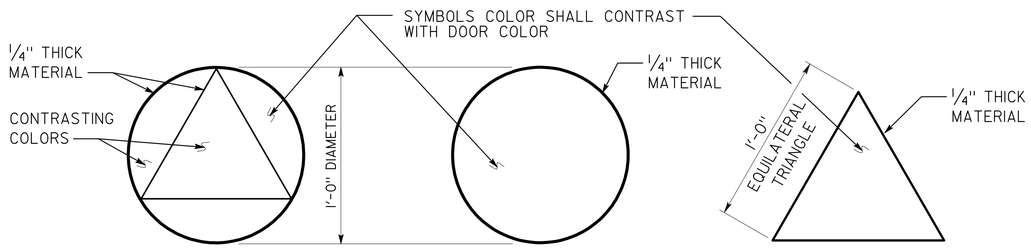


## 4 RESTROOM IDENTIFICATION SYMBOLS

INSTALL PER DETAIL 5
ANY PICTOGRAM AND TEXT ARE NOT REQUIRED

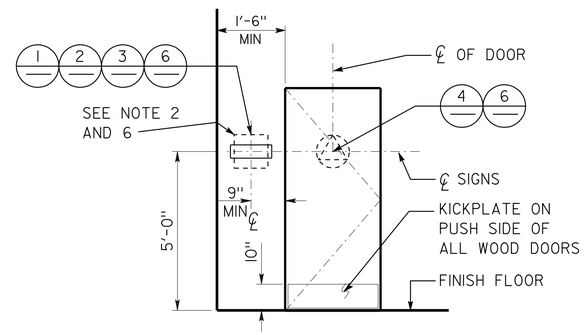


## 5 SIGN LOCATIONS

REFER TO SIGNAGE NOTES FOR ADDITIONAL INFORMATION

## SIGNAGE NOTES:

1. LOCATE ROOM IDENTIFICATION SIGNS, EXIT SIGNS, AND RESTROOM SIGNS ON WALL ADJACENT TO DOOR ON LATCH SIDE. IF WALL SPACE IS NOT AVAILABLE ON LATCH SIDE, LOCATE ON NEAREST ADJACENT WALL.
2. REFER TO SPECIFICATIONS FOR SIGN MATERIAL AND OTHER COLOR SELECTION. EXCEPT DETAIL 6, SIGN COLORS MAY VARY FROM DETAILS.
3. SEE DOOR SCHEDULE FOR TEXT AND SIGN LOCATIONS, UON.
4. CONTRACTED BRAILLE: DOTS SHALL BE 1/10" OC IN EACH CELL WITH 2/10" SPACE BETWEEN CELLS MEASURED FROM THE SECOND COLUMN OF DOTS IN THE FIRST CELL TO THE FIRST COLUMN OF DOTS IN THE SECOND CELL. DOTS SHALL BE RAISED A MINIMUM OF 1/40" ABOVE THE BACKGROUND. DOTS SHALL BE DOMED OR ROUNDED.
5. TACTILE CHARACTERS SHALL BE UPPERCASE SANS SERIF RAISED 1/32" MIN WITH A WIDTH TO HEIGHT RATIO BETWEEN 3:5 AND 1:1 AND A STROKE WIDTH TO HEIGHT RATIO BETWEEN 1:5 AND 1:10.
6. PROVIDE 18"x18" MIN CLEAR FLOOR SPACE IN FRONT OF AND CENTERED ON THE SIGN.

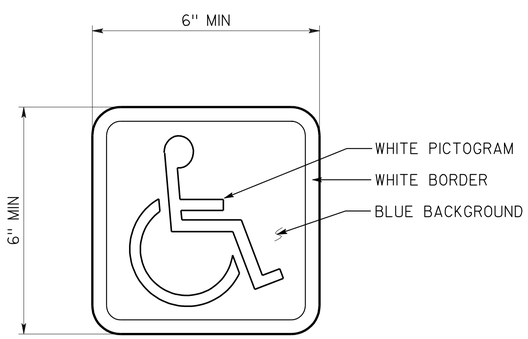


## 6 INTERNATIONAL SYMBOL OF ACCESSIBILITY SIGN

INSTALL PER DETAIL 5
SEE PLANS, EXT ELEVATIONS, OR SCHEDULE FOR SIGN LOCATIONS
SIGN MAY BE ON DOORS OR WALLS.
DECAL MAY BE USED ON SMOOTH SURFACE

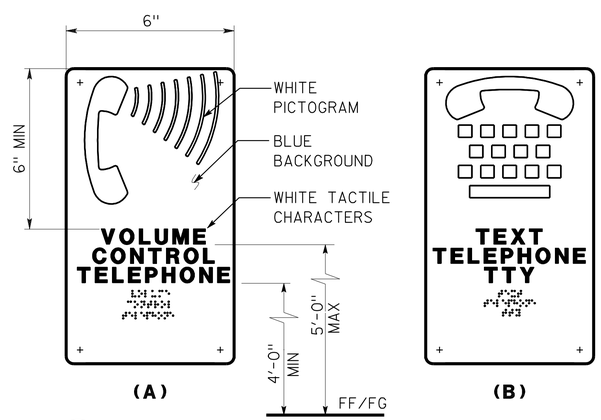


FOR ADDITIONAL INFORMATION SEE 1 & 2

## 7 TELEPHONE SIGNS

TEXT MAY VARY
SEE PLANS OR EXT ELEVATIONS FOR SIGN LOCATIONS AND MOUNTING HEIGHTS

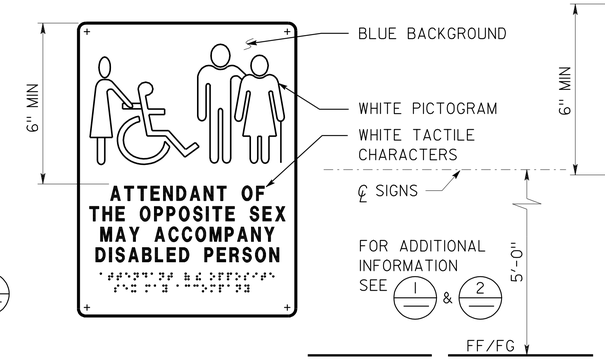


## 8 RESTROOM ACCOMPANY SIGN

SEE PLANS OR ELEVATIONS FOR LOCATIONS
SEE DETAIL 7 FOR TEXT MOUNTING HEIGHT

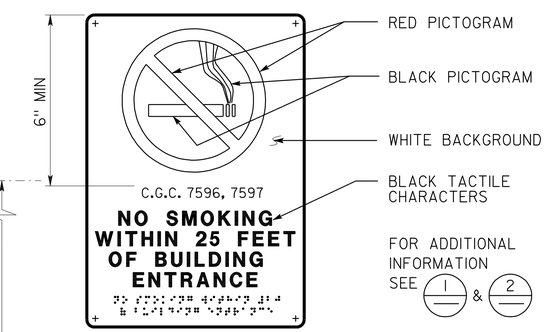


## 9 NO SMOKING SIGN

SEE PLANS OR EXTERIOR ELEVATIONS FOR LOCATIONS
SEE DETAIL 7 FOR TEXT MOUNTING HEIGHT

# DETAILS

NO SCALE UNLESS OTHERWISE NOTED

NOTE: SPECIFIC DETAILS OR NOTES ON OTHER SHEETS SHALL PREVAIL OVER STANDARD DETAILS AND NOTES ON THIS SHEET

| STANDARD DRAWING | | | | |
|---|---|---|---|---|
| FILE NO. __-__-_ | DESIGN | BY D. ALSEY | CHECKED Y.A. WANG | APPROVED R.E. Travis DESIGN SUPERVISOR |
| DRAWING DATE 01-10 | DETAILS | BY D. GOOD | CHECKED Y.A. WANG | |
| | SUBMITTED BY Y.A. WANG | | | |

STATE OF CALIFORNIA DEPARTMENT OF TRANSPORTATION

DIVISION OF ENGINEERING SERVICES ARCHITECTURAL AND STRUCTURAL DESIGN

BRIDGE NO. 4550191
POST MILE 30.3

DISTRICT 12 COMMUNICATION HUB
ACCESSIBILITY — ACCESSIBILITY STANDARD DETAILS

SHEET A0-3.3

a0-3.3.dgn
DS OSD Imperial Rev. 11/98 01-MAR-2010 13:03

ORIGINAL SCALE IN INCHES FOR REDUCED PLANS 0 1 2 3

CU 12375
EA 0K1501

DISREGARD PRINTS BEARING EARLIER REVISION DATES → 09-14-09

REVISION DATES (PRELIMINARY STAGE ONLY) SHEET OF

01-MAR-2010 13:03

a0-3.3.dgn

| DIST. | COUNTY | ROUTE | POST MILES TOTAL PROJECT | SHEET NO. | TOTAL SHEETS |
|---|---|---|---|---|---|
| 12 | Ora | 5 | 24.9/30.3 | 58 | 67 |

LICENSED ARCHITECT — DATE
Licensed Architect

LICENSED ARCHITECT — CARLOS A. SANCHEZ — No. C-15202 — Ren. 12/31/11 — STATE OF CALIFORNIA

2-22-10
PLANS APPROVAL DATE

*The State of California or its officers or agents shall not be responsible for the accuracy or completeness of electronic copies of this plan sheet.*

**CALIFORNIA STATE FIRE MARSHAL APPROVED**
Approval of this plan does not authorize or approve any omission or deviation from applicable regulations. Final approval is subject to field inspection. One set of approved plans shall be available on the project site at all times.
Reviewed by: MIKE TANAKA
Approval date: 12-14-09

**ACCESSIBILITY DESIGN APPROVAL STAMP**
DOT / DES / OTA
**12-Ok1501**
DISTRICT - EA
Reviewed by: YA WANG
Date: 02-24-10

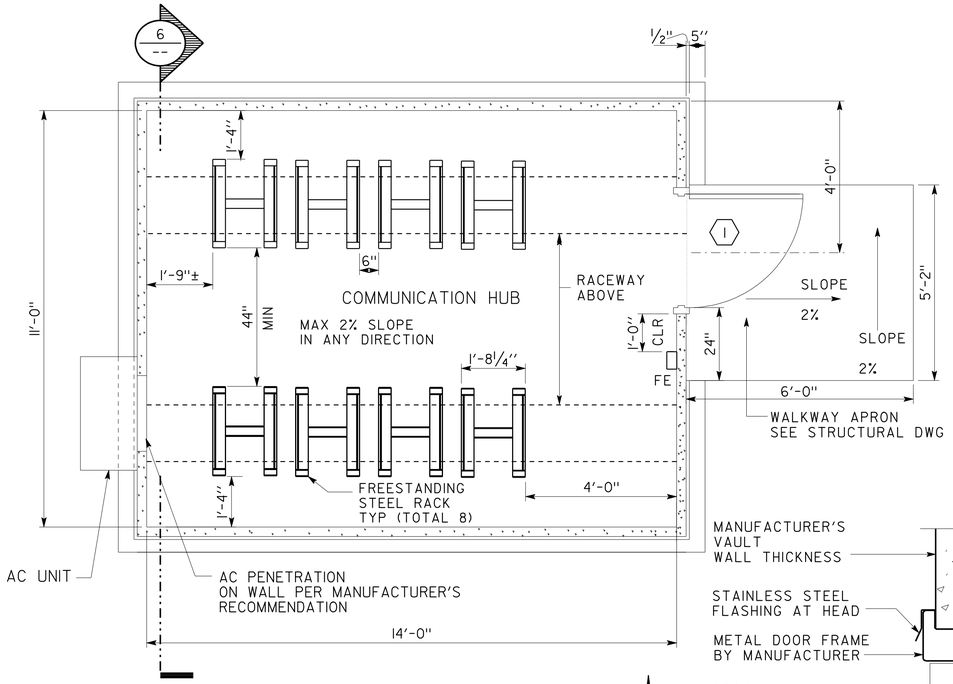


## 1 FLOOR PLAN
SCALE 1/2" = 1'-0"

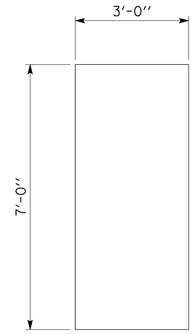


HOLLOW METAL DOOR

## 2 DOOR TYPE A
SCALE: 1/2"=1'-0"

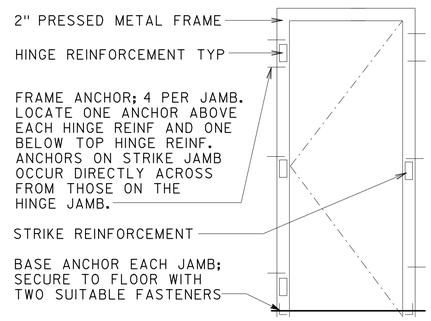


## 3 TYPICAL DOOR FRAME ANCHORAGE
SCALE: NTS

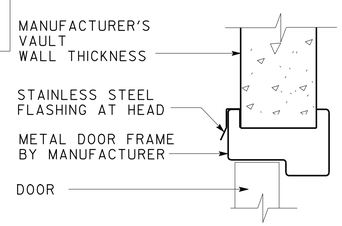


## 7 DOOR FRAME
SCALE: 4"=1'-0"

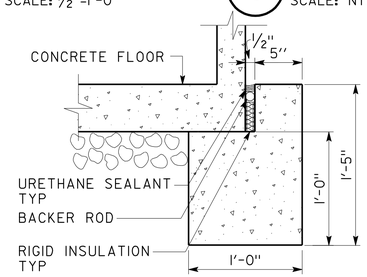


## 8 PERIMETER FOUNDATION DETAIL
SCALE 1 1/2" = 1'-0"

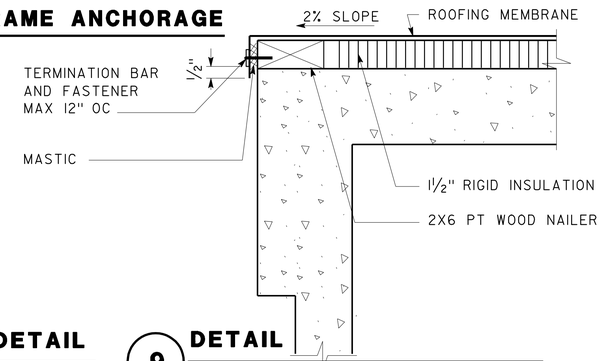


## 9 DETAIL
SCALE 1" = 1'-0"

## EXTERIOR FINISH

| | |
|---|---|
| METAL DOOR: KELLY-MOORE-SEATTLE RED 74 | OR EQ. |
| METAL FRAME: KELLY-MOORE-SPANISH SAND 231 | OR EQ. |
| FLUTED CONCRETE: KELLY-MOORE-COLOR:GRAYSTONE 230 | OR EQ. |
| CONCRETE WALL: KELLY-MOORE-COLOR: SWISS COFFEE 23 | OR EQ. |

## INTERIOR FINISH

| | |
|---|---|
| CONCRETE WALL: KELLY-MOORE-COLOR: SWISS COFFEE 23 | OR EQ. |
| FLOORING: 12"X12"X1/8" VINYL COMPOSITION TILE- COLOR: TAN | |
| 4" RESILIENT RUBBER BASE - COLOR: DARK BROWN | |

## DOOR SCHEDULE

| No. | DOOR | | | | | | FRAME | | REMARKS |
|---|---|---|---|---|---|---|---|---|---|
| | TYPE | WIDTH | HEIGHT | THICK | MAT | HARDWARE GROOP | MAT | SIZE | |
| 1 | A | 3'-0" | 7'-0" | 1 3/4" | STEEL | 1 | STEEL | - | EXTERIOR DOOR |

NOTES

1. ACCESS TO SERVICE ALL EQUIPMENT SHALL BE FROM THE CENTRAL AISLE ONLY
2. 44" MIN WIDTH OF CENTRAL AISLE SHALL BE MAINTAINED TO THE EDGE OF RACK OR EQUIPMENT WHICHEVER PROJECTS FARTHEST
3. DOOR STRIKE SIDE CLEARANCE ON BOTH SIDES AS NOTED ON THE PLAN SHALL BE FREE FROM EQUIPMENT, INCLUDING THOSE INDICATED ON THE ELECT. PLANS

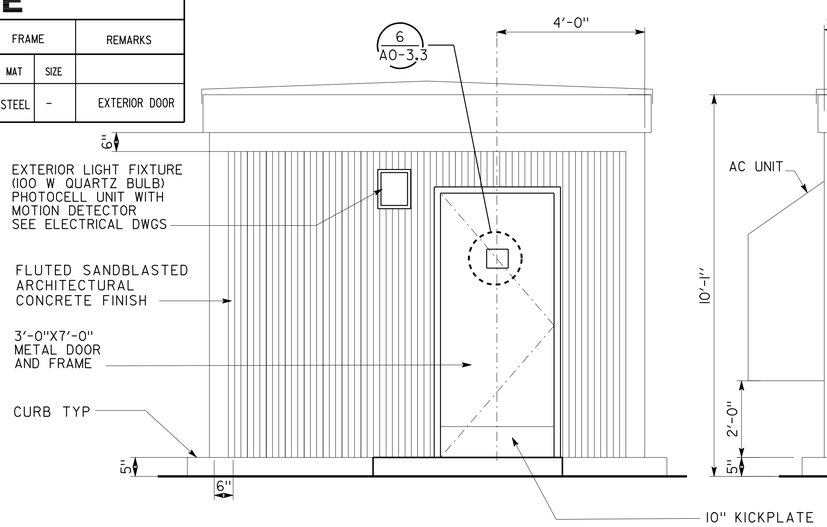


## 4 EAST ELEVATION
SCALE 1/2" = 1'-0"

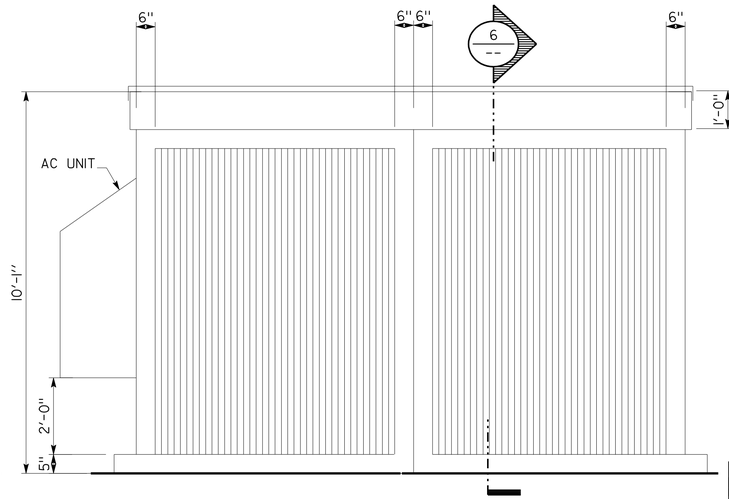


## 5 NORTH ELEVATION/ SOUTH ELEVATION SIMILAR
SCALE 1/2" = 1'-0"

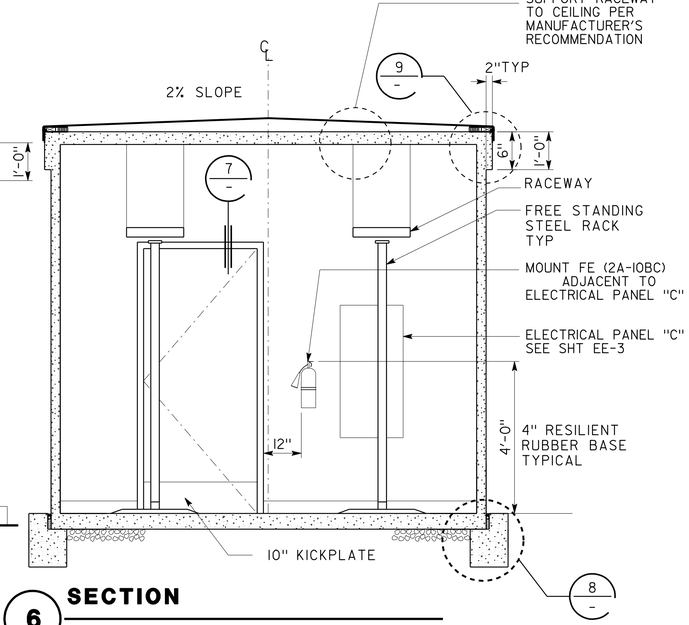


## 6 SECTION
SCALE 1/2" = 1'-0"

| | | | |
|---|---|---|---|
| DESIGN | BY C SANCHEZ | CHECKED | |
| DETAILS | BY | CHECKED | |
| QUANTITIES | BY - | CHECKED - | |

STATE OF CALIFORNIA
DEPARTMENT OF TRANSPORTATION

DIVISION OF ENGINEERING SERVICES
ARCHITECTURAL AND STRUCTURAL DESIGN

BRIDGE NO. 4550191
POST MILE 30.3

**DISTRICT 12 COMMUNICATION HUB**
FLOOR PLAN, ELEVATION, SECTION & DETAILS

SHEET **A-1**

A1_01_flrpln.dgn
DS OSD Imperial Rev. 11/98 01-MAR-2010 13:03

ORIGINAL SCALE IN INCHES FOR REDUCED PLANS 0 1 2 3

CU 12375
EA 0K1501

DISREGARD PRINTS BEARING EARLIER REVISION DATES → 09-14-09

REVISION DATES (PRELIMINARY STAGE ONLY) — SHEET X OF X

01-MAR-2010 13:03
A1_01_flrpln.dgn

| DIST. | COUNTY | ROUTE | POST MILES TOTAL PROJECT | SHEET NO. | TOTAL SHEETS |
|---|---|---|---|---|---|
| 12 | Ora | 5 | 24.9/30.3 | 59 | 67 |

REGISTERED CIVIL ENGINEER

2-22-10
PLANS APPROVAL DATE

REGISTERED PROFESSIONAL ENGINEER Sean R. Samuel No. 54569 Exp. 12-31-09 CIVIL STATE OF CALIFORNIA

The State of California or its officers or agents shall not be responsible for the accuracy or completeness of electronic copies of this plan sheet.

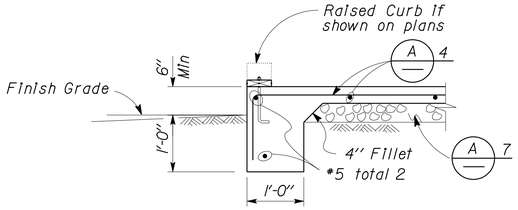


1 EXTERIOR FOOTING
No Scale

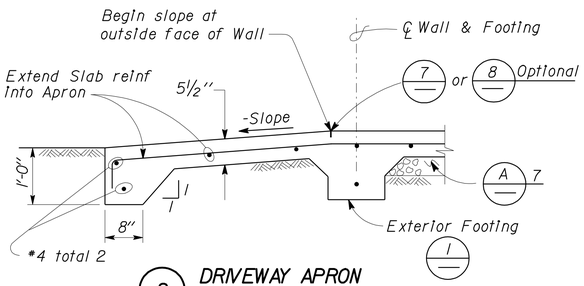


2 DRIVEWAY APRON
No Scale

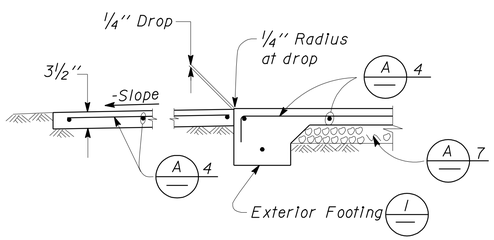


3 WALKWAY APRON
No Scale

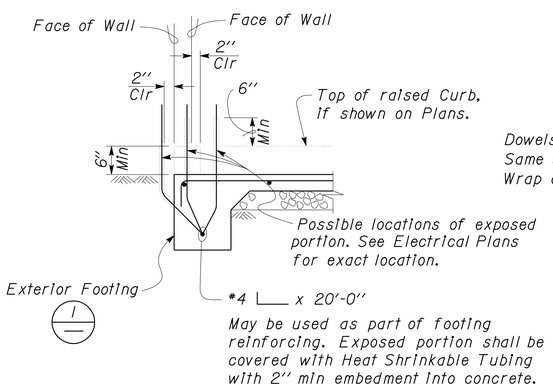


4 GROUND BAR DETAIL
No Scale

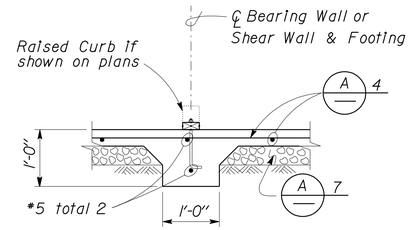


5 INTERIOR FOOTING
No Scale

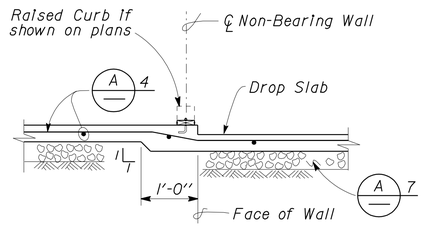


6 DROP SLAB AT NON-BEARING WALL
No Scale

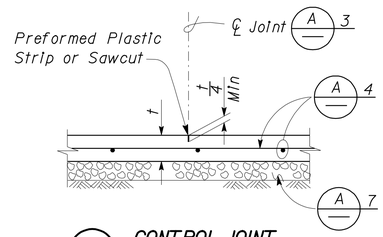


7 CONTROL JOINT
No Scale

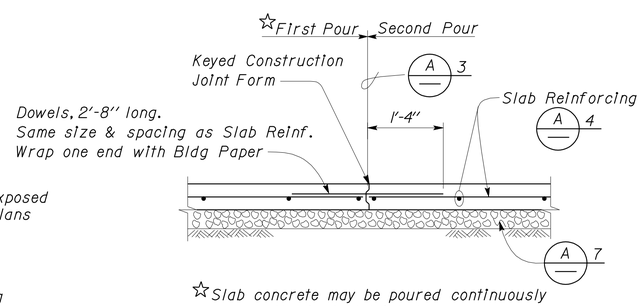


☆Slab concrete may be poured continuously across the Control Joint, to cover as large an area as practical.

8 CONTRACTION JOINT
No Scale

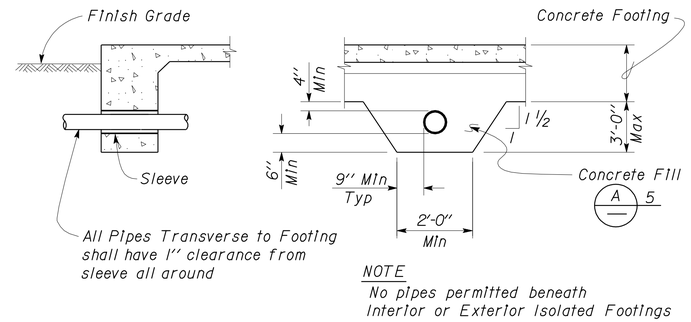


NOTE
No pipes permitted beneath Interior or Exterior Isolated Footings

9 PIPE DETAILS THROUGH FOOTING
No Scale

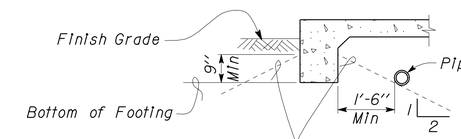


NOTE
For Pipe Cover, see Specifications: Earthwork for Building Work

Exterior Footing shown, Interior or Exterior Isolated Footings are similar.

10 PIPE DETAILS PARALLEL TO FOOTING
No Scale

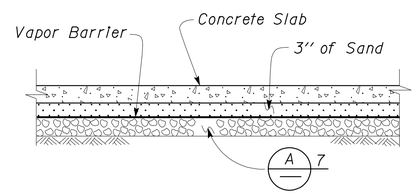


11 MOISTURE BARRIER
No Scale

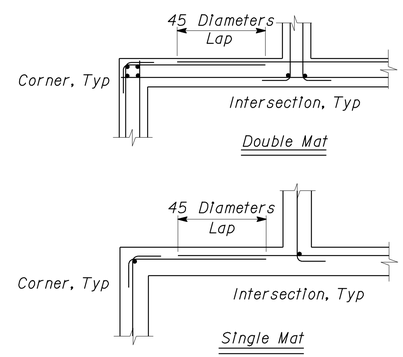


12 CORNER/INTERSECTION REINF SPLICE, TYPICAL
No Scale

## A CONCRETE NOTES

1. The following minimum concrete cover shall be provided for reinforcement.

| | Minimum Cover |
|---|---|
| a. Concrete cast against and permanently exposed to earth | 3" |
| b. Concrete exposed to earth or weather but cast in forms : | |
| *6 thru *18 bars | 2" |
| *5 bar and smaller, W31 or D31 Wire, and smaller | 1½" |
| c. Concrete not exposed to weather or in contact with ground : Slabs, Walls and Joists : | |
| *14 and *18 Bar | 1½" |
| *11 Bar and smaller | ¾" |
| Beams and Columns : Primary Reinforcement, Ties, Stirrups and Spirals | 1½" |

2. Splices in continuous reinforcement as in Walls, Wall Footings, etc. *8 or smaller shall have a lap of 45 diameters and the splices in adjacent bars shall not be less than 5'-0" apart.

   Continuous Bars in spandrels, Wall Beams, etc. shall lap Top Bars at center of span and Bottom Bars at supports.

3. Contraction Joints and Control Joints shall divide slab into areas not exceeding 25 square yards without reentrant corners and with length to width ratios not exceeding 1.5 to 1. Joint spacing shall not exceed 15'-0".

4.

| Slab Thickness (t) | Reinforcement | |
|---|---|---|
| 3½" | *3 @ 18 | Each way, place in center of Slab |
| 5½" | *4 @ 18 | Each way, place in center of Slab |

5. Concrete fill is to be placed before Footing is poured. Make the same width as the Footing and the full width of the Pipe trench. Concrete fill not required for pipes less than 2" diameter for pipes more than 3'-0" below bottom of footing.

6. See Mechanical and Architectural Plans for size and locations of pipe, vents, ducts and other similar openings. See Electrical Plans for conduits and outlet boxes in floors, walls, etc.

7. Place 6" of free draining granular material under slabs.

STATE OF CALIFORNIA DEPARTMENT OF TRANSPORTATION

DIVISION OF ENGINEERING SERVICES ARCHITECTURAL AND STRUCTURAL DESIGN

BRIDGE NO. 4550191
POST MILE 30.3

DISTRICT 12 COMMUNICATION HUB

CONCRETE NOTES

SHEET ST-1

DOES SD ImperialRev. 9/02

SCALE: ALL DIMENSIONS ARE IN MILLIMETERS UNLESS OTHERWISE NOTED.

ORIGINAL SCALE IN INCHES FOR REDUCED PLANS 0 1 2 3

CU 12375
EA 0K1501

DISREGARD PRINTS BEARING EARLIER REVISION DATES → - -06

REVISION DATES (PRELIMINARY STAGE ONLY) SHEET OF

01-MAR-2010 13:04

st_01.dgn

| DIST. | COUNTY | ROUTE | POST MILES TOTAL PROJECT | SHEET NO. | TOTAL SHEETS |
|---|---|---|---|---|---|
| 12 | Ora | 5 | 24.9/30.3 | 60 | 67 |

REGISTERED CIVIL ENGINEER DATE

REGISTERED PROFESSIONAL ENGINEER Sean R. Samuel No. 54569 Exp. 12-31-09 CIVIL STATE OF CALIFORNIA

2-22-10
PLANS APPROVAL DATE

The State of California or its officers or agents shall not be responsible for the accuracy or completeness of electronic copies of this plan sheet.

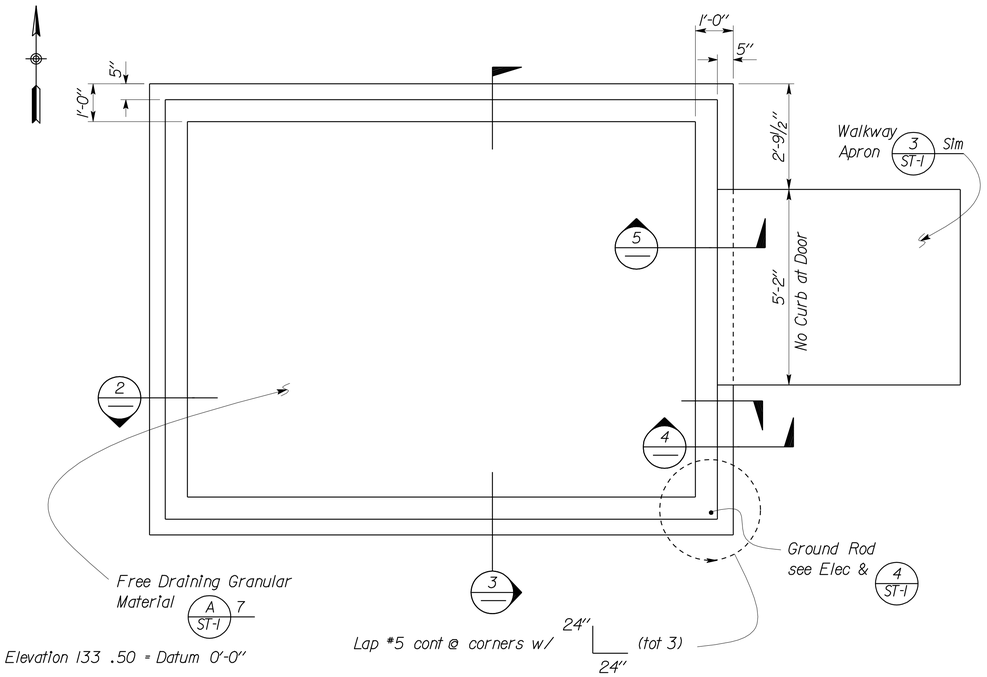


NOTE: Overall foundation dimension depend on Precast Manufacturers submittal.

1 **FOUNDATION PLAN**
Scale 1/2" = 1' - 0"

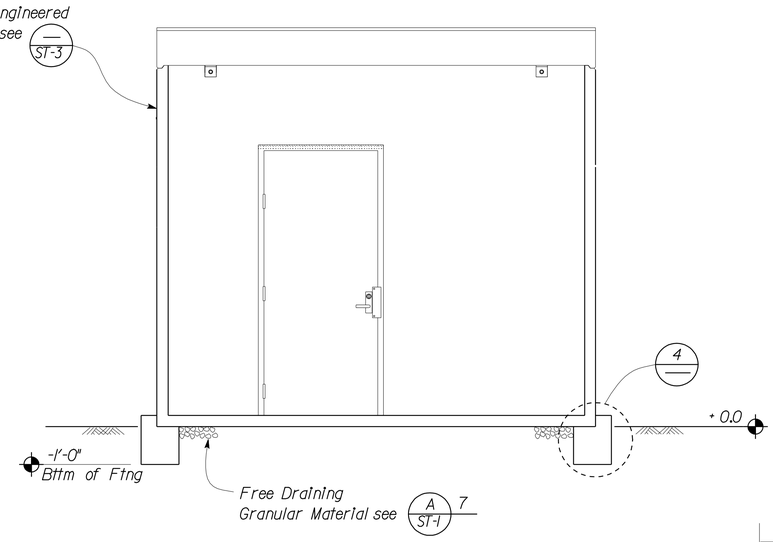


3 **SECTION**
Scale 1/2" = 1' - 0"

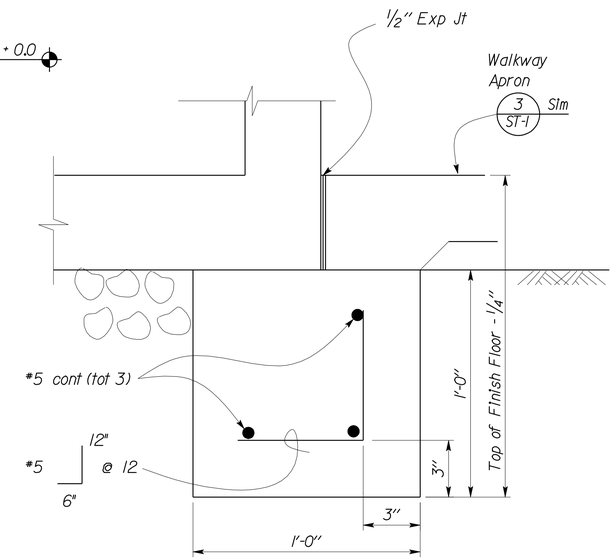


NOTE: Lap #5 cont @ corners w/ 24" 24" (tot 3)

5 **FOOTING SECTION @ CURB**
Scale 3" = 1' - 0"

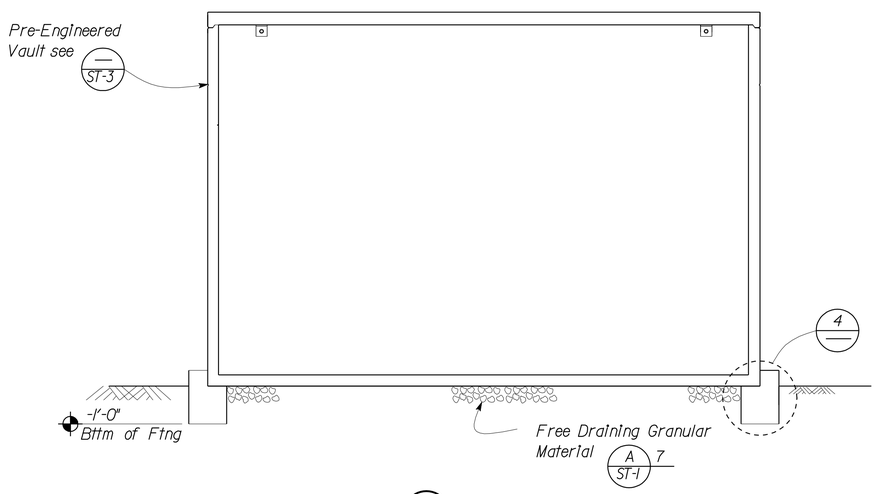


2 **LONGITUDINAL SECTION**
Scale 1/2" = 1' - 0"

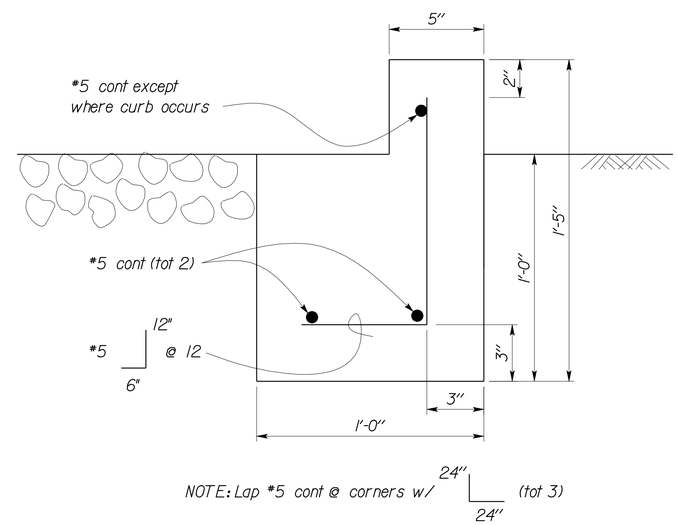


NOTE: Lap #5 cont @ corners w/ 24" 24" (tot 3)

4 **FOOTING SECTION**
Scale 3" = 1' - 0"

| | | | |
|---|---|---|---|
| DESIGN | BY Sean Samuel | CHECKED | |
| DETAILS | BY Sean Samuel | CHECKED | |
| QUANTITIES | BY | CHECKED | |

STATE OF CALIFORNIA
DEPARTMENT OF TRANSPORTATION

DIVISION OF ENGINEERING SERVICES
ARCHITECTURAL AND STRUCTURAL DESIGN

BRIDGE NO. 4550191
POST MILE 30.3

**DISTRICT 12 COMMUNICATION HUB**
PRE-ENGINEERED COMMUNICATIONS VAULT FOUNDATION PLAN & SECTION

SHEET **ST-2**

DOES SD Imperial Rev. 9/02

ORIGINAL SCALE IN INCHES FOR REDUCED PLANS 0 1 2 3

CU 12375
EA 0K1501

DISREGARD PRINTS BEARING EARLIER REVISION DATES →
REVISION DATES (PRELIMINARY STAGE ONLY) SHEET OF

st_02.dgn

01-MAR-2010 13:04

| DIST. | COUNTY | ROUTE | POST MILES TOTAL PROJECT | SHEET NO. | TOTAL SHEETS |
|---|---|---|---|---|---|
| 12 | Ora | 5 | 24.9/30.3 | 61 | 67 |

REGISTERED CIVIL ENGINEER DATE

REGISTERED PROFESSIONAL ENGINEER Sean R. Samuel No. 54569 Exp. 12-31-09 CIVIL STATE OF CALIFORNIA

2-22-10
PLANS APPROVAL DATE

The State of California or its officers or agents shall not be responsible for the accuracy or completeness of electronic copies of this plan sheet.

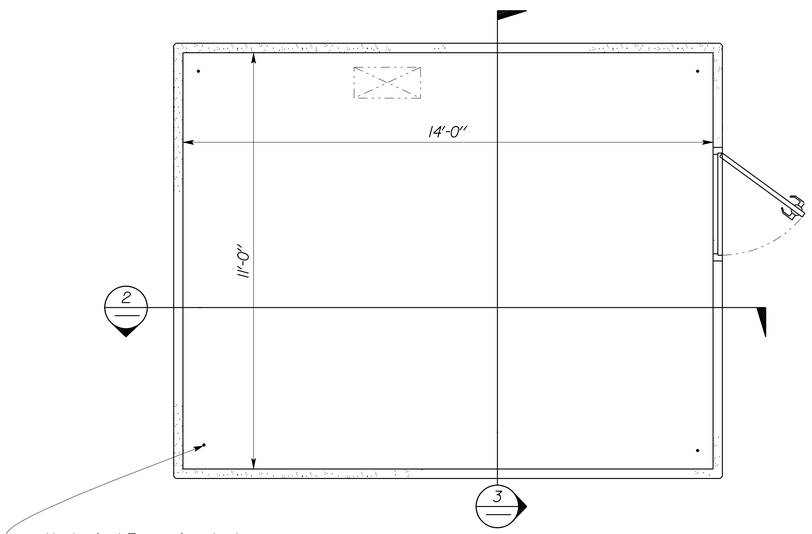


1 FLOOR PLAN
Scale ½" = 1'-0"

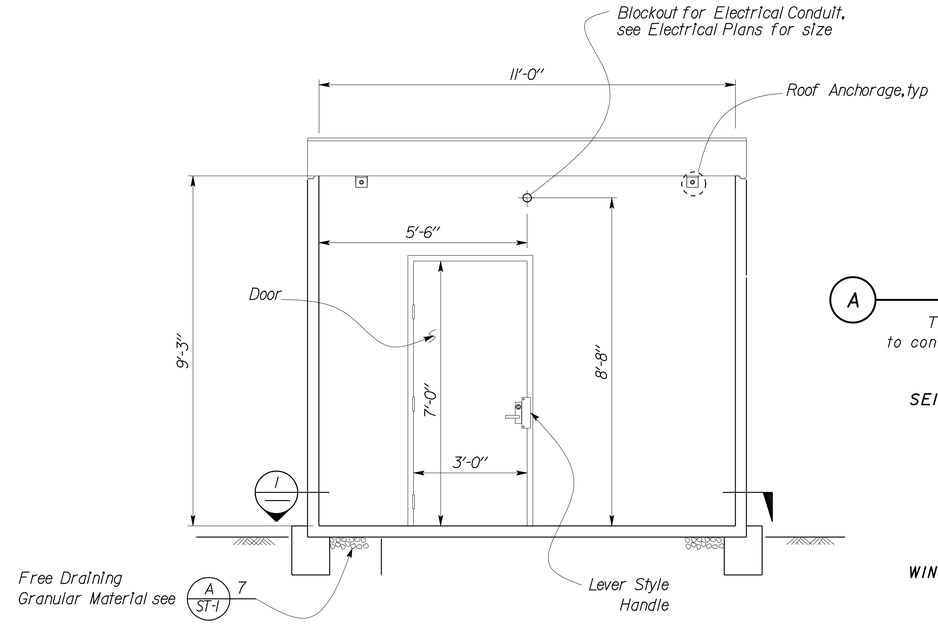


Note
Anti Graffiti Finish,
all exterior, vertical surfaces.

3 FRONT ELEVATION
Scale ½" = 1'-0"

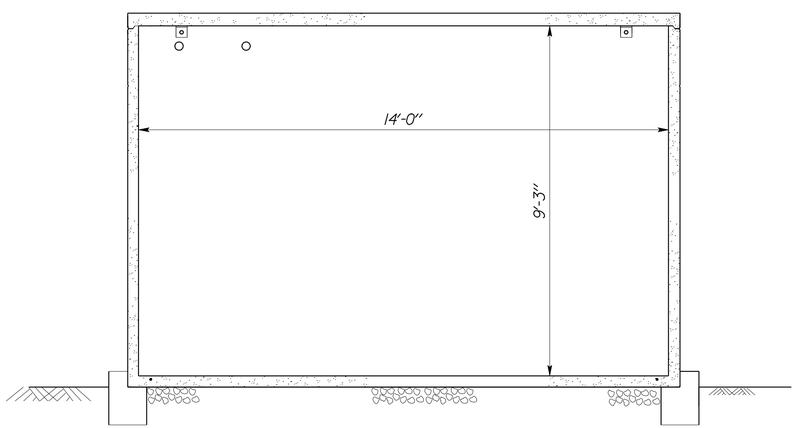


2 LONGITUDINAL SECTION
Scale ½" = 1'-0"

## A PROJECT DESIGN CRITERIA

The building work on this project has been designed to conform to the 2007 Californina Building Code (2006 IBC).

### LOADS

**SEISMIC:** Occupancy Category = II
Importance Factor I = 1.0
Site Soil Class = D
$S_S$ = 1.155 $S_{DS}$ = 0.767
$S_1$ = 0.657 $S_{D1}$ = 0.436
Seismic Design Category = D

**WIND:** Basic Wind Speed = 85 mph I = 1.0
$\lambda$ = 1.3 $P_s$ 30 = ± 14.4
$K_{zt}$ = 1.0
Wind Pressure on Components and Cladding = XX psf
Parapet: Windward Parapet $GC_{pi}$ = 0.55
Leeward Parapet $GC_{pn}$ = 0.XX

**LIVE LOAD:** Roof = 20 psf

## B MATERIALS

**REINFORCED CONCRETE:** (Ultimate Strength Design):
f'c = 3,000 psi
$f_y$ = 60,000 psi

**STRUCTURAL STEEL:** (Allowable Strength Design):
Plates $F_y$ = 36 ksi

**FOUNDATION:**
Allowable Soil Pressure (DL + LL): = 1,500 psf assumed

| | | | |
|---|---|---|---|
| DESIGN | BY Sean Samuel | CHECKED | |
| DETAILS | BY Sean Samuel | CHECKED | |
| QUANTITIES | BY | CHECKED | |

STATE OF CALIFORNIA
DEPARTMENT OF TRANSPORTATION

DIVISION OF ENGINEERING SERVICES
ARCHITECTURAL AND STRUCTURAL DESIGN

BRIDGE NO. 4550191
POST MILE 30.3

**DISTRICT 12 COMMUNICATION HUB**
PRE-ENGINEERED COMMUNICATIONS VAULT PLAN & SECTIONS

SHEET ST-3

DOES SD Imperial Rev. 9/02

ORIGINAL SCALE IN INCHES FOR REDUCED PLANS 0 1 2 3

CU 12375
EA 0K1501

DISREGARD PRINTS BEARING EARLIER REVISION DATES →
REVISION DATES (PRELIMINARY STAGE ONLY) SHEET OF

01-MAR-2010 13:04
st_03.dgn

| DIST. | COUNTY | ROUTE | POST MILES TOTAL PROJECT | SHEET NO. | TOTAL SHEETS |
|---|---|---|---|---|---|
| 12 | Ora | 5 | 24.9/30.3 | 62 | 67 |

REGISTERED ELECTRICAL ENGINEER — 12-16-09 DATE

REGISTERED PROFESSIONAL ENGINEER — J. ABDELSAYED — No. 18915 — Exp. 12-31-09 — ELEC — STATE OF CALIFORNIA

2-22-10
PLANS APPROVAL DATE

The State of California or its officers or agents shall not be responsible for the accuracy or completeness of electronic copies of this plan sheet.

# GRAPHIC SYMBOLS FOR ELECTRICAL WIRING AND LAYOUT DIAGRAMS

| SYMBOL | DESCRIPTION |
|---|---|
| | POLE-TOP ELECTROLIER |
| | POLE-ARM ELECTROLIER |
| CEILING WALL | |
| S S | SURFACE FLUORESCENT, METAL HALIDE OR SODIUM VAPOR FIXTURE |
| R R | RECESSED FLUORESCENT, METAL HALIDE, OR SODIUM VAPOR FIXTURE |
| X X | EXIT LIGHT |
| | SURFACE OR PENDANT INDIVIDUAL FLUORESCENT FIXTURE |
| R | RECESSED INDIVIDUAL FLUORESCENT FIXTURE |
| | SURFACE OR PENDANT CONTINUOUS ROW FLUORESCENT FIXTURES |
| NOTE: | A LOWER CASE LETTER NEAR GRAPHIC LIGHTING FIXTURE SYMBOL DENOTES THAT FIXTURE IS CONTROLLED BY A SIMILARLY MARKED SWITCH, AN ALPHA-NUMERIC SYMBOL NEAR GRAPHIC LIGHTING FIXTURE SYMBOL DENOTES FIXTURE TYPE, (I=INCANDESCENT, F=FLUORESCENT, MH=METAL HALIDE, H=HIGH PRESSURE SODIUM VAPOR), DESIGN TYPE, NUMBER OF LAMPS AND WATTAGE. |
| | EXAMPLE : (4) F 2 - 2 x 32 — 32 WATT LAMPS; 2 LAMPS; DESIGN TYPE; FLUORESCENT; NUMBER OF FIXTURES |
| B B | BLANK OUTLET |
| J J | JUNCTION BOX |
| D | DROP CORD |
| | SINGLE RECEPTACLE OUTLET |
| | DUPLEX RECEPTACLE OUTLET |
| (GFCI) | DUPLEX RECEPTACLE OUTLET (WITH GFCI) |
| (GFCI) WP | DUPLEX RECEPTACLE OUTLET, WEATHERPROOF (WITH GFCI) |
| | SINGLE, SPECIAL PURPOSE RECEPTACLE OUTLET |
| | DUPLEX, SPECIAL PURPOSE RECEPTACLE OUTLET |
| R | RANGE OUTLET |
| C | CLOCK HANGER RECEPTACLE |
| F | FAN HANGER RECEPTACLE |
| | FLOOR SINGLE RECEPTACLE OUTLET |
| | FLOOR DUPLEX RECEPTACLE OUTLET |
| | FLOOR SPECIAL PURPOSE OUTLET |
| | FLOOR RADIO OUTLET |
| | FLOOR TELEPHONE OUTLET |
| | MULTI-FLOOR OUTLET, 2 OR MORE GANG |
| | MULTI-OUTLET ASSEMBLY |
| S | SINGLE POLE SWITCH |
| $S_2$ | DOUBLE POLE SWITCH |
| $S_3$ | THREE WAY SWITCH |
| $S_4$ | FOUR WAY SWITCH |
| $S_D$ | AUTOMATIC DOOR |
| $S_K$ | KEY OPERATED SWITCH |
| $S_P$ | SWITCH AND PILOT LIGHT |
| $S_{MC}$ | MOMENTARY CONTACT SWITCH |
| $S_{RC}$ | REMOTE CONTROL SWITCH |
| $S_{WP}$ | WEATHERPROOF SWITCH |
| $S_F$ | FAN SWITCH |
| $S_L$ | LIGHT SWITCH |
| $S_H$ | HEATER SWITCH |
| $S_{VS}$ | VARIABLE SPEED MOTOR CONTROL SWITCH |
| $S_{CHLF}$ | TWO SWITCHES, ONE SWITCH FOR LIGHT AND FAN AND TIMER SWITCH FOR HEAT LAMP |

| SYMBOL | DESCRIPTION |
|---|---|
| $S^{O}_{1}$ | OCCUPANCY SENSOR WALL SWITCH, SINGLE LEVEL |
| $S^{O}_{2}$ | OCCUPANCY SENSOR WALL SWITCH, BILEVEL |
| $S_M$ | MOTION SENSOR SWITCH |
| $S_T$ | MANUAL MOTOR STARTING SWITCH, THERMAL OVERLOAD TYPE |
| $S_{HP}$ | MANUAL MOTOR STARTING SWITCH, WITHOUT OVERLOAD ELEMENT |
| Ts | TIMER SWITCH |
| S | SWITCH AND SINGLE RECEPTACLE |
| S | SWITCH AND DUPLEX RECEPTACLE |
| | HAND DRYER NOZZLE |
| H | HAND DRYER |
| | RADIO OUTLET |
| | TELEPHONE OUTLET |
| | SOUND SYSTEM LOUD SPEAKER OUTLET |
| | PUSHBUTTON |
| L | PUSHBUTTON STATION, NC, WITH LOCKING DEVICE FOR OPEN |
| | PUSHBUTTON STATION MOTOR CONTROL |
| | BUZZER |
| | BELL |
| | COMBINATION BELL-BUZZER |
| T | THERMOSTAT |
| PS | PRESSURE SWITCH |
| R | CONTROL RELAY |
| FS | FLOW SWITCH |
| PEC | PHOTOELECTRIC CELL |
| R | RADIO OUTLET |
| TV | TELEVISION OUTLET |
| M | MICROPHONE OUTLET |
| | FLUSH-MOUNTED PANELBOARD AND CABINET |
| | SURFACE-MOUNTED PANELBOARD AND CABINET |
| | LIGHTING PANEL |
| | POWER PANEL |
| | COMBINATION LIGHTING AND POWER |
| MC | MOTOR CONTROLLER |
| | DISCONNECT SWITCH |
| | CONDUIT CONCEALED IN CEILING OR WALL |
| | CONDUIT CONCEALED IN FLOOR |
| | CONDUIT EXPOSED |
| | CROSS-LINES INDICATE NUMBER OF #12 AWG CONDUCTORS. LONGER CROSS-LINE INDICATES 1#12 AWG (G) FOR EQUIPMENT GROUNDING CONDUCTOR. NO CROSS-LINE INDICATES 2#12 WITH 1#12 (G) UNLESS OTHERWISE NOTED. ALL CONDUIT ½" UNLESS OTHERWISE NOTED. |
| A1, A2 | HOMERUN TO PANELBOARD, ARROWS INDICATE NUMBER OF CIRCUITS, LETTER DENOTES PANELBOARD, NUMERAL DENOTES CIRCUIT. |
| SM | SURFACE METAL RACEWAY |
| (2) ½"C, PVC, 2#12 | CONDUCTOR INFO (PER CONDUIT); CONDUIT TYPE; CONDUIT SIZE; NUMBER OF CONDUITS (NO NUMBER INDICATES ONE CONDUIT) |
| MC | CONDUIT, RIGID STEEL, UNDERGROUND |
| PVC | CONDUIT, POLYVINYL CHLORIDE, UNDERGROUND |
| | CONDUIT, FLEXIBLE |
| | CONDUIT, TURN UP |
| | CONDUIT, TURN DOWN |
| | CONDUIT SEAL, EXPLOSION-PROOF |
| X | CONDUIT, EXPANSION JOINT |
| | ADAPTER, ONE TYPE CONDUIT TO ANOTHER |
| | POLE |

| SYMBOL | DESCRIPTION |
|---|---|
| OC | OCCUPANCY SENSOR |
| H | HEAT DETECTOR |
| S | SMOKE DETECTOR |
| P | MANUAL PULL STATION |
| AV | AUDIO/VISUAL ALARM DEVICE |
| G | GLASS BREAK DISCRIMINATOR |
| C | MAGNETIC CONTACT SWITCH-PEDESTRIAN DOOR |
| C | MAGNETIC CONTACT SWITCH-VEHICLE DOOR |
| K | KEYPAD FOR ALARM SYSTEM |
| W | COMBINATION DETECTOR (MICROWAVE/PASSIVE INFRARED) |
| | PULL BOX-LETTER INDICATES TYPE OF PULL BOX (E-ELECTRICAL, T-TELEPHONE, R-RADIO) |
| (T) | PULL BOX (TRAFFIC RATED)-LETTER INDICATES TYPE OF PULL BOX (E-ELECTRICAL, T-TELEPHONE, R-RADIO) |
| CHLF | COMBINATION HEAT, LIGHT AND FAN UNIT |
| A / EE-2 | SECTION/ELEVATION LETTER; SHEET NUMBER |
| I / EE-2 | DETAIL NUMBER; SHEET NUMBER |

## REMODEL WORK

| SYMBOL | DESCRIPTION |
|---|---|
| | EXISTING FLUORESCENT FIXTURE-TO REMAIN |
| | EXISTING FLUORESCENT FIXTURE-REMOVE |
| | EXISTING INCANDESCENT FIXTURE-TO REMAIN |
| | EXISTING INCANDESCENT FIXTURE-REMOVE |
| | EXISTING OUTLET-TO REMAIN |
| | EXISTING RECEPTACLE OUTLET-TO REMAIN |
| | EXISTING RECEPTACLE OUTLET-REMOVE |
| -E-E- | EXISTING CONDUIT AND CONDUCTORS-TO REMAIN UNLESS OTHERWISE NOTED |
| -**- | EXISTING CONDUIT AND CONDUCTORS-REMOVE |
| S | EXISTING SWITCH-TO REMAIN |
| | EXISTING SWITCH-REMOVE |
| J | EXISTING JUNCTION BOX-TO REMAIN |
| | EXISTING JUNCTION BOX-REMOVE |

## STANDARD NOTES

| | |
|---|---|
| AB | ABANDON, IF APPLIED TO CONDUIT, REMOVE CONDUCTORS. |
| BC | INSTALL PULL BOX IN EXISTING CONDUIT RUN. |
| CB | INSTALL CONDUIT INTO EXISTING PULL BOX. |
| CC | CONNECT NEW AND EXISTING CONDUIT. REMOVE EXISTING CONDUCTORS AND INSTALL CONDUCTORS AS INDICATED. |
| CF | CONDUIT TO REMAIN FOR FUTURE USE. REMOVE CONDUCTORS, INSTALL PULL ROPE AND PLUG. |
| FA | REMOVE FOUNDATION ABOVE GRADE AND ABANDON FOUNDATION BELOW GRADE. |
| RL | RELOCATE EQUIPMENT. |
| RLD | RELOCATED EQUIPMENT. |
| SC | SPLICE NEW TO EXISTING CONDUCTORS. |

## STANDARD PLANS

DATED MAY, 2006

- (ADD OR DELETE AS REQUIRED)
- (ADD OR DELETE AS REQUIRED)
- (ADD OR DELETE AS REQUIRED)
- (ADD OR DELETE AS REQUIRED)
- (ADD OR DELETE AS REQUIRED)

# GRAPHIC SYMBOLS FOR ELECTRICAL DIAGRAMS

| SYMBOL | DESCRIPTION |
|---|---|
| | CIRCUIT BREAKER, SINGLE POLE |
| | CIRCUIT BREAKER, DOUBLE POLE |
| | CIRCUIT BREAKER, THREE POLE |
| GFCI | CIRCUIT BREAKER, WITH GROUND FAULT CIRCUIT INTERRUPTER |
| | CONTACT, NORMALLY OPEN |
| | CONTACT, NORMALLY CLOSED |
| | CONTACT, NORMALLY CLOSED, TIME DELAY CLOSING ON DE-ENERGIZING |
| | CONTACT, NORMALLY OPEN, TIME DELAY OPENING ON DE-ENERGIZING |
| | CONTACT, NORMALLY OPEN, TIME DELAY CLOSING ON ENERGIZING |
| | CONTACT, NORMALLY CLOSED, TIME DELAY OPENING ON ENERGIZING |
| | CONTACT, SINGLE POLE DOUBLE-THROW |
| | OPERATING COIL |
| | LIQUID LEVEL ACTUATED SWITCH, NORMALLY CLOSED |
| | LIQUID LEVEL ACTUATED SWITCH, NORMALLY OPEN |
| | PRESSURE ACTUATED SWITCH, NORMALLY CLOSED |
| | PRESSURE ACTUATED SWITCH, NORMALLY OPEN |
| | FLOW ACTUATED SWITCH, NORMALLY CLOSED |
| | FLOW ACTUATED SWITCH, NORMALLY OPEN |
| | TEMPERATURE ACTUATED SWITCH, NORMALLY CLOSED |
| | TEMPERATURE ACTUATED SWITCH, NORMALLY OPEN |
| | LIMIT SWITCH, NORMALLY CLOSED |
| | LIMIT SWITCH, NORMALLY OPEN |
| | PUSHBUTTON SWITCH, NORMALLY CLOSED |
| | PUSHBUTTON SWITCH, NORMALLY OPEN |
| | SWITCH, SINGLE-POLE |
| | SWITCH, SINGLE-POLE, DOUBLE-THROW |
| | SWITCH, DOUBLE-POLE |
| | SWITCH, DOUBLE-POLE, DOUBLE-THROW |
| | SWITCH, SINGLE-POLE, 3-POSITION |
| | THERMAL OVERLOAD |
| | FUSE |
| | RESISTOR |
| | VARIABLE RESISTOR |
| | TRANSFORMER WINDING |
| | GROUNDING ELECTRODE |
| | ENCLOSURE BOND |
| A | PILOT LIGHT (A=AMBER, G=GREEN, R=RED) |
| G | GENERATOR |
| M | MOTOR |
| F | FAN MOTOR |

**CALIFORNIA STATE FIRE MARSHAL APPROVED**

Approval of this plan does not authorize or approve any omission or deviation from applicable regulations. Final approval is subject to field inspection. One set of approved plans shall be available on the project site at all times.

Reviewed by: MIKE TANAKA
Approval date: 12-14-09

## PROJECT NOTES

A. SEPARATE GROUNDED (NEUTRAL) CONDUCTOR SHALL BE USED FOR EACH 120-VOLT CIRCUIT.

B. HOMERUNS TO PANELBOARDS SHALL BE INSTALLED AS SHOWN ON THE PLANS. HOMERUNS SHALL NOT BE COMBINED.

C. A SINGLE INSULATED EQUIPMENT GROUNDING CONDUCTOR (SIZED AS REQUIRED) SHALL BE INSTALLED IN EACH CONDUIT RUN.

## ABBREVIATIONS

| | |
|---|---|
| A | AMPERES |
| A/C | AIR CONDITIONING UNIT |
| ACS | AIR COMPRESSOR STARTER |
| AI | ANALOG INPUT |
| AL | ALARM LIGHT |
| AO | ANALOG OUTPUT |
| AVC | AIR VOLUME CONTROLLER |
| BD | BUILDING DISCONNECT |
| BRK | BREAKER |
| C | CONDUIT |
| CB | CIRCUIT BREAKER |
| CKT | CIRCUIT |
| CR | CONTROL RELAY |
| CSW | CURRENT SWITCH |
| DI | DIGITAL INPUT |
| DO | DIGITAL OUTPUT |
| DP | DUPLEX PLUG RECEPTACLE |
| DS | DOOR SWITCH |
| (E) | EXISTING |
| EF | EXHAUST FAN |
| F | FUSE |
| FL | FAILURE LIGHT |
| FLA | FLASHER |
| FLEX | FLEXIBLE CONDUIT |
| FLS | FLOW SWITCH |
| FR | FAILURE RESET |
| FS | FLOAT SWITCH |
| G | GROUND |
| GFCI | GROUND FAULT CIRCUIT INTERRUPTER |
| GRS | GALVANIZED RIGID STEEL |
| IR | INDUCTION RELAY |
| JB | JUNCTION BOX |
| L | LIGHT |
| LC | LIGHTING CONTACTOR |
| LCP | LIGHTING CONTROL PANEL |
| LD | LIGHT DISCONNECT |
| LL | LIQUID LEVEL RELAY |
| LLC | LIQUID LEVEL CONTROLLER |
| LP | LIGHT PANEL |
| LS | LIGHT SWITCH |
| LT | LIGHT TRANSFORMER |
| LTO | LIGHT TRANSFORMER OVERLOAD |
| MB | MAIN BREAKER |
| MC | METALLIC CONDUIT |
| MCP | MOTOR CIRCUIT PROTECTOR |
| MCC | MOTOR CONTROL CENTER |
| MSB | MAIN SWITCHBOARD |
| MT | EMPTY CONDUIT |
| (N) | NEW |
| NC | NORMALLY CLOSED |
| NO | NORMALLY OPEN |
| NSW | NEUTRAL SWITCHING BREAKER |
| OL | OVERLOAD |
| P | POLE |
| PB | PULL BOX |
| PB | PUSH BUTTON |
| PFR | PHASE FAILURE RELAY |
| PFRD | PHASE FAILURE RELAY DISCONNECT |
| PEC | PHOTOELECTRIC CELL |
| PL | PILOT LIGHT |
| PS | PRESSURE SWITCH |
| PTS | POWER TRANSFER SWITCH |
| PVC | POLYVINYL CHLORIDE |
| RES | RESISTOR |
| RTB | RADIO TERMINAL BOARD |
| S | STARTER COIL |
| SD | SERVICE DISCONNECT |
| SFR | SEAL FAILURE RELAY |
| SL | SUMP LIGHT |
| SPR | STANDBY POWER RECEPTACLE |
| SS | SELECTOR SWITCH |
| ST | STARTER |
| SV | SOLENOID VALVE |
| T | TRANSFORMER |
| TB | TERMINAL BLOCK |
| TDR | TIME DELAY RELAY |
| TGLS | TOGGLE SWITCH |
| TM | TIME METER |
| TOT | TOTAL |
| TS | TIMER SWITCH |
| TSW | TEST SWITCH |
| TTB | TELEPHONE TERMINAL BOARD |
| TYP | TYPICAL |
| UPS | UNINTERRUPTIBLE POWER SUPPLY |
| WLS | WATER LEVEL SWITCH |
| WP | WEATHERPROOF |

| | BY | CHECKED |
|---|---|---|
| DESIGN | Joseph Abdelsayed | J.S. Sandhu |
| DETAILS | Joseph Abdelsayed | J.S. Sandhu |
| QUANTITIES | Joseph Abdelsayed | J.S. Sandhu |

STATE OF CALIFORNIA
DEPARTMENT OF TRANSPORTATION

DIVISION OF ENGINEERING SERVICES
ELECTRICAL-MECHANICAL-WATER AND WASTEWATER DESIGN

BRIDGE NO. 4550191
POST MILE 30.3

**DISTRICT 12 COMMUNICATION HUB**

ELECTRICAL LEGEND

SHEET **EE-0**

DOES SD Imperial Rev. 9/02

ORIGINAL SCALE IN INCHES FOR REDUCED PLANS 0 1 2 3

CU 12375
EA 0K1501

DISREGARD PRINTS BEARING EARLIER REVISION DATES → 12/16/09

REVISION DATES (PRELIMINARY STAGE ONLY) SHEET OF

01-MAR-2010 13:04

ee_0.dgn

| DIST. | COUNTY | ROUTE | POST MILES TOTAL PROJECT | SHEET NO. | TOTAL SHEETS |
|---|---|---|---|---|---|
| 12 | Ora | 5 | 24.9/30.3 | 63 | 67 |

REGISTERED ELECTRICAL ENGINEER — 12-16-09 DATE

REGISTERED PROFESSIONAL ENGINEER — J. ABDELSAYED — No. 18915 — Exp. 12-31-09 — ELEC — STATE OF CALIFORNIA

2-22-10
PLANS APPROVAL DATE

The State of California or its officers or agents shall not be responsible for the accuracy or completeness of electronic copies of this plan sheet.

# CERTIFICATE OF COMPLIANCE (Part 1 of 4) LTG-1-C

| | | | |
|---|---|---|---|
| PROJECT NAME: DISTRICT 12 COMMUNICATION HUB | | DATE: 10/08/2009 | |
| PROJECT ADDRESS: INTERCHANGE OF INTERSTATE 5 AND INTERSTATE 55 | | NOT APPLICABLE Building Permit # | |
| PRINCIPAL DESIGNER-LIGHTING: JOSEPH H. ABDELSAYED | TELEPHONE: (916)227-8062 | | |
| DOCUMENTATION AUTHOR: JOSEPH H. ABDELSAYED | TELEPHONE: (916)227-8062 | Checked by/Date Enforcement Agency Use | |

**GENERAL INFORMATION**

| | | | |
|---|---|---|---|
| DATE OF PLANS: 10/8/2009 | BUILDING CONDITIONED FLOOR AREA | CLIMATE ZONE | 8 |
| BUILDING TYPE | ☑ NONRESIDENTIAL ☐ HIGH RISE RESIDENTIAL | ☐ HOTEL/MOTEL GUEST | |
| ☐ CONDITIONED SPACES | ☑ UNCONDITIONED SPACES ☐ INDOOR / OUTDOOR SIGNS | | |
| PHASE OF CONSTRUCTION | ☑ NEW CONSTRUCTION ☐ ADDITION ☐ ALTERATION | | |

**METHOD OF COMPLIANCE**

☐ PERFORMANCE ☑ COMPLETE BUILDING ☐ AREA CATEGORY ☐ TAILORED ☐ COMMON LIGHTING

**STATEMENT OF COMPLIANCE**

This Certificate of Compliance lists the building features and performance specifications needed to comply with Title 24, Parts 1 and 6 of the California Code of Regulations. This certificate applies only to building lighting requirements.

The documentation preparer hereby certifies that the documentation is accurate and complete.

| DOCUMENTATION AUTHOR | SIGNATURE | DATE |
|---|---|---|
| JOSEPH H. ABDELSAYED | Joe Abdelsayed | 10/08/2009 |

The Principal Lighting Designer hereby certifies that the proposed building design represented in this set of construction documents is consistent with the other compliance forms and worksheets, with the specifications, and with any other calculations submitted with this permit application. The proposed building has been designed to meet the lighting requirements contained in the applicable parts of Sections 110, 119, 130 through 132, 146, 148, and 149 of Title 24, Part 6.

☑ The plans & specifications meet the requirements of Part 6 (Sections 10-103a). ☐ The installation certificates meet the requirements of Part 6 (10-103a3).

☐ The operation & maintenance information meets the requirements of Part 6 (10-103c).
Please check one: (These sections of the Business and Professions Code are printed in full in the Nonresidential Manual.)

☑ I hereby affirm that I am eligible under the provisions of Division 3 of the Business and Professions Code to sign this document as the person responsible for its preparation; and that I am licensed in the State of California as a civil engineer or electrical engineer, or I am a licensed architect.

☐ I affirm that I am eligible under the provisions of Division 3 of the Business and Professions Code by section 5537.2 or 6737.3 to sign this document as the person responsible for its preparation; and that I am a licensed contractor performing this work.

☐ I affirm that I am eligible under Division 3 of the Business and Professions Code to sign this document because it pertains to a structure or type of work described as exempt pursuant to Business and Professions Code Sections 5537, 5538 and 6737.1.

| PRINCIPAL LIGHTING DESIGNER-NAME | SIGNATURE | DATE | LIC.# |
|---|---|---|---|
| JOSEPH H. ABDELSAYED | Joe Abdelsayed | 10/08/2009 | 18915 |

**LIGHTING MANDATORY MEASURES**

✓ ☑ Indicate location on plans of Note Block for Mandatory Measures EE-3

**LIGHTING COMPLIANCE FORMS & WORKSHEETS (Check box if worksheet is included)**

| | | |
|---|---|---|
| ☑ | LTG-1-C, Parts 1 of 4 and 2 of 4 | Certificate of Compliance. Part 1 of 4 and 2 of 4 are required for all submittals. |
| ☐ | LTG-1-C, Part 3 of 4 | Certificate of Compliance. Part 3 of 4 submittal is required only if Control Credits are claimed. |
| ☑ | LTG-1-C, Part 4 of 4 | Certificate of Compliance. Part 4 of 4 submittal is required when lighting controls are installed. |
| ☑ | LTG-2-C | Indoor Lighting Schedule |
| ☐ | LTG-3-C | Portable Lighting Worksheet |
| ☐ | LTG-4-C | Lighting Controls Credit Worksheet |
| ☑ | LTG-5-C | Indoor Lighting Power Allowance |
| ☐ | LTG-6-C | Tailored Method Worksheet |
| ☐ | LTG-7-C | Room Cavity Ratio Worksheet |
| ☐ | LTG-8-C | Common Lighting Systems Method Worksheet |
| ☐ | LTG-9-C | Line Voltage Track Lighting Worksheet |
| ☐ | OLTG-4-C | Signs (See OLTG-4-C Sign Worksheet in Chapter 6, Outdoor Lighting and Signs Chapter) |

*2005 Nonresidential Compliance Forms* *January 2006*

# CERTIFICATE OF COMPLIANCE (Part 2 of 4) LTG-1-C

| | |
|---|---|
| PROJECT NAME: DISTRICT 12 COMMUNICATION HUB | DATE: 10/08/2009 |

**INSTALLED INDOOR LIGHTING POWER FOR CONDITIONED AND UNCONDITIONED SPACES**

| | | INSTALLED WATTS |
|---|---|---|
| INSTALLED LIGHTING, CONDITIONED SPACES (From LTG-2-C) | | 0 |
| PORTABLE LIGHTING (From LTG-3-C) | + | 0 |
| LIGHTING CONTROL CREDIT, CONDITIONED SPACES (From LTG-4-C) | - | 0 |
| CONDITIONED SPACE ADJUSTED INSTALLED LIGHTING POWER | = | 0 |
| | | |
| INSTALLED LIGHTING, UNCONDITIONED SPACES (From LTG-2-C) | | 128 |
| LIGHTING CONTROL CREDIT, UNCONDITIONED SPACES (From LTG-4-C) | - | 0 |
| UNCONDITIONED SPACE ADJUSTED INSTALLED LIGHTING POWER | = | 128 |

**ALLOWED INTERIOR LIGHTING POWER FOR CONDITIONED SPACES**

✓
☑ COMPLETE BUILDING METHOD (From LTG-5-C)

☐ AREA CATEGORY METHOD (From LTG-5-C)

☐ TAILORED METHOD (From LTG-5-C)

ALLOWED LIGHTING POWER — ALLOWED WATTS: 154

**ALTERNATE COMPLIANCE**

✓
☐ PERFORMANCE METHOD

☐ COMMON LIGHTING SYSTEM (From LTG-8-C)

ALLOWED INTERIOR LIGHTING POWER FOR UNCONDITIONED SPACE (From LTG-5-C) 154 Watts

**MANDATORY LIGHTING MEASURES FOR INDOOR AND DAYLIT AREAS**

**MANDATORY INDOOR AND DAYLIGHTING AUTOMATIC CONTROLS**

| CONTROL LOCATION (Room #, Area #, or Description) | CONTROL IDENTIFICATION | CONTROL TYPE (Auto Time Switch, Dimming, Photosensor, etc.) | SPACE CONTROLLED Lists the location of controlled lights | ✓ If Control is for Daylighting | NOTE TO FIELD |
|---|---|---|---|---|---|
| COMM. HUB | OC | OCCUPANCY SENSOR | COMM. HUB | | |
| | | | | | |
| | | | | | |
| | | | | | |
| | | | | | |
| | | | | | |
| | | | | | |
| | | | | | |
| | | | | | |
| | | | | | |

*2005 Nonresidential Compliance Forms* *January 2006*

**CALIFORNIA STATE FIRE MARSHAL APPROVED**
Approval of this plan does not authorize or approve any omission or deviation from applicable regulations. Final approval is subject to field inspection. One set of approved plans shall be available on the project site at all times.
Reviewed by: MIKE TANAKA
Approval date: 12-14-09

GENERAL NOTE:

Only forms LTG-1-C, Parts 1 of 4 and 2 of 4 are shown on this sheet.
Other checked forms are available upon request.

| | | | |
|---|---|---|---|
| DESIGN | BY Joseph Abdelsayed | CHECKED J.S. Sandhu | |
| DETAILS | BY Joseph Abdelsayed | CHECKED J.S. Sandhu | |
| QUANTITIES | BY Joseph Abdelsayed | CHECKED J.S. Sandhu | |

STATE OF CALIFORNIA DEPARTMENT OF TRANSPORTATION

DIVISION OF ENGINEERING SERVICES ELECTRICAL-MECHANICAL-WATER AND WASTEWATER DESIGN

BRIDGE NO. 4550191
POST MILE 30.3

**DISTRICT 12 COMMUNICATION HUB**
TITLE 24 COMPLIANCE FORM I

SHEET EE-1.1

DOES SD Imperial Rev. 9/02

ORIGINAL SCALE IN INCHES FOR REDUCED PLANS 0 1 2 3

CU 12375
EA 0K1501

DISREGARD PRINTS BEARING EARLIER REVISION DATES → 12/16/09

REVISION DATES (PRELIMINARY STAGE ONLY) SHEET OF

01-MAR-2010 13:05
ee_1_1.dgn

| DIST. | COUNTY | ROUTE | POST MILES TOTAL PROJECT | SHEET NO. | TOTAL SHEETS |
|---|---|---|---|---|---|
| 12 | Ora | 5 | 24.9/30.3 | 64 | 67 |

REGISTERED ELECTRICAL ENGINEER — 12-16-09 DATE

REGISTERED PROFESSIONAL ENGINEER J. ABDELSAYED No. 18915 Exp. 12-31-09 ELEC STATE OF CALIFORNIA

2-22-10
PLANS APPROVAL DATE

The State of California or its officers or agents shall not be responsible for the accuracy or completeness of electronic copies of this plan sheet.

# CERTIFICATE OF COMPLIANCE (Part 1 of 2) OLTG-1-C

| | | |
|---|---|---|
| PROJECT NAME DISTRICT 12 COMMUNICATION HUB | | DATE 10/08/2009 |
| PROJECT ADDRESS INTERCHANGE OF INTERSTATE 5 AND INTERSTATE 55 | | NOT APPLICABLE Building Permit # |
| PRINCIPAL DESIGNER-LIGHTING JOSEPH H. ABDELSAYED | TELEPHONE (916)227-8062 | |
| DOCUMENTATION AUTHOR JOSEPH H. ABDELSAYED | TELEPHONE (916)227-8062 | Checked by/Date Enforcement Agency Use |

**GENERAL INFORMATION**

DATE OF PLANS | OUTDOOR LIGHTING ZONE (✓ One) ☐ LZ1 ☐ LZ2 ☑ LZ3 ☐ LZ4

**FUNCTION TYPE** ☑ OUTDOOR LIGHTING ☐ OUTDOOR SIGNS ☐ INDOOR SIGNS

**PHASE OF CONSTRUCTION** ☑ NEW CONSTRUCTION ☐ ADDITIONS ☐ ALTERATIONS

**STATEMENT OF COMPLIANCE**

This Certificate of Compliance lists outdoor lighting system specifications needed to comply with Title 24, Parts 1 and 6 of the California Code of Regulations. This certificate applies only to building lighting requirements.

The documentation preparer hereby certifies that the documentation is accurate and complete.

| DOCUMENTATION AUTHOR | SIGNATURE | DATE |
|---|---|---|
| JOSEPH H. ABDELSAYED | Joe Abdelsayed | 10/08/2009 |

The Principal Lighting Designer hereby certifies that the proposed outdoor lighting and signs design represented in this set of construction documents is consistent with the other compliance forms and worksheets, with the specifications, and with any other calculations submitted with this permit application. The proposed building has been designed to meet the lighting requirements contained in the applicable parts of Sections 110, 119, 130 through 132, 146, and 149 of Title 24, Part 6.

☑ I hereby affirm that I am eligible under the provisions of Division 3 of the Business and Professions Code to sign this document as the person responsible for its preparation; and that I am licensed in the State of California as a civil engineer or electrical engineer, or I am a licensed architect.

☐ I affirm that I am eligible under the provisions of Division 3 of the Business and Professions Code by section 5537.2 or 6737.3 to sign this document as the person responsible for its preparation; and that I am a licensed contractor performing this work.

☐ I affirm that I am eligible under Division 3 of the Business and Professions Code to sign this document because it pertains to a structure or type of work described as exempt pursuant to Business and Professions Code Sections 5537, 5538 and 6737.1.

(These sections of the Business and Professions Code are printed in full in the Nonresidential Manual.)

| PRINCIPAL LIGHTING DESIGNER-NAME | SIGNATURE | DATE | LIC.# |
|---|---|---|---|
| JOSEPH H. ABDELSAYED | Joe Abdelsayed | 10/08/2009 | 18915 |

**INSTRUCTIONS TO APPLICANT OUTDOOR LIGHTING COMPLIANCE & WORKSHEETS (Check box if worksheet is included)**

*For detailed instructions on the use of this and all Energy Efficiency Standards compliance forms, please refer to the Nonresidential Manual published by the California Energy Commission.*

| | |
|---|---|
| ☑ OLTG-1-C | Certificate of Compliance. Required on plans for all submittals for outdoor lighting. Part 2 of 2 may be incorporated in schedules on the plans. |
| | Either LTG-1-C or OLTG-1-C may be used for signs as follows:<br>1. Use LTG-1-C if the project consists solely of indoor signs.<br>2. Use LTG-1-C if the project consists of indoor lighting, and outdoor or indoor signs, but no other outdoor lighting.<br>3. Use OLTG-1-C if the project consists solely of outdoor signs.<br>4. Use OLTG-1-C if the project consists of outdoor lighting, and indoor or outdoor signs, but no other indoor lighting. |
| ☑ OLTG-2-C | LIGHTING COMPLIANCE SUMMARY. Applicable Parts required for ALL outdoor lighting allowances (Except for Signs). |
| ☑ OLTG-3-C | AREA CALCULATIONS WORKSHEETS. Applicable parts required for all outdoor area calculations. |
| ☐ OLTG-4-C | SIGN LIGHTING COMPLIANCE. Required for all internally and externally illuminated signs, for both indoor and outdoor signs. |

***2005 Nonresidential Compliance Forms*** ***January 2006***

# CERTIFICATE OF COMPLIANCE (Part 2 of 2) OLTG-1-C

PROJECT NAME DISTRICT 12 COMMUNICATION HUB

**Lighting Schedules on Plans Show that Outdoor Lighting Meets Allowed Lighting Power**

✓

☑ Lighting power allowances for general site illumination on OLTG-2-C Part 1 of 4
☐ Not applicable

☐ Lighting power allowances for local ordinances or for security multipliers on OLTG-2-C Part 2 of 4
☑ Not applicable

☐ Lighting power allowances for specific applications, other than vehicle service stations with canopies on OLTG-2-C Part 3 of 4
☑ Not applicable

☐ Lighting power allowances for vehicle service station canopies on OLTG-2-C Part 4 of 4
☑ Not applicable

☐ Sign lighting compliance on OLTG-4-C
☑ Not applicable

**Mandatory Measures on Plans Show that Outdoor Lighting Meets Outdoor Lighting Controls and Equipment**
Indicate location on plans of Note Block for Mandatory Measure

✓

☑ Installed lighting power has been determined in accordance with § 130(c)1
☐ Not applicable

☑ All permanently installed luminaires with lamps rated over 100 watts either have a lamp efficacy of at least 60 lumens per watt or are controlled by a motion sensor § 132(a)
☐ Not applicable

☐ All Luminaires with lamps rated greater than 175 watts in hardscape areas, including parking lots, building entrances, canopies, and all outdoor sales areas meet the Cutoff Requirements of S§132(b)
☑ Not applicable

☑ All permanently installed outdoor lighting meets the Control Requirements of § 132(c)1
☐ Not applicable

☐ Building facades, parking lots, garages, canopies, and outdoor sales areas meet the Multi-Level Lighting Requirements of § 132(c)2
☑ Not applicable

**MANDATORY AUTOMATIC CONTROLS**

| CONTROL LOCATION | CONTROL IDENTIFICATION | CONTROL TYPE Auto Time Switch/ Photosensor, etc | AREA CONTROLLED | NOTE TO FIELD |
|---|---|---|---|---|
| COMM HUB | NA | OCCUPANCY SENSOR | LIGHTING ABOVE DOOR | |
| | | | | |
| | | | | |
| | | | | |
| | | | | |
| | | | | |
| | | | | |

***2005 Nonresidential Compliance Forms*** ***January 2006***

**CALIFORNIA STATE FIRE MARSHAL APPROVED**
Approval of this plan does not authorize or approve any omission or deviation from applicable regulations. Final approval is subject to field inspection. One set of approved plans shall be available on the project site at all times.
Reviewed by: MIKE TANAKA
Approval date: 12-14-09

GENERAL NOTE:

Only forms OLTG-1-C, Parts 1 of 2 and 2 of 2 are shown on this sheet.
Other checked forms are available upon request.

| | BY | CHECKED |
|---|---|---|
| DESIGN | Joseph Abdelsayed | J.S. Sandhu |
| DETAILS | Joseph Abdelsayed | J.S. Sandhu |
| QUANTITIES | Joseph Abdelsayed | J.S. Sandhu |

STATE OF CALIFORNIA DEPARTMENT OF TRANSPORTATION

DIVISION OF ENGINEERING SERVICES ELECTRICAL-MECHANICAL-WATER AND WASTEWATER DESIGN

BRIDGE NO. 4550191
POST MILE 30.3

**DISTRICT 12 COMMUNICATION HUB**
TITLE 24 COMPLIANCE FORM 2

SHEET **EE-1.2**

DOES SD Imperial Rev. 9/02

ORIGINAL SCALE IN INCHES FOR REDUCED PLANS 0 1 2 3

CU 12375
EA 0K1501

DISREGARD PRINTS BEARING EARLIER REVISION DATES → 00/00/00

REVISION DATES (PRELIMINARY STAGE ONLY) SHEET OF

01-MAR-2010 13:05
ee_1_2.dgn

| DIST. | COUNTY | ROUTE | POST MILES TOTAL PROJECT | SHEET NO. | TOTAL SHEETS |
|---|---|---|---|---|---|
| 12 | Ora | 5 | 24.9/30.3 | 65 | 67 |

REGISTERED ELECTRICAL ENGINEER — 12-16-09 DATE

REGISTERED PROFESSIONAL ENGINEER — J. ABDELSAYED — No. 18915 — Exp. 12-31-09 — ELEC — STATE OF CALIFORNIA

2-22-10
PLANS APPROVAL DATE

The State of California or its officers or agents shall not be responsible for the accuracy or completeness of electronic copies of this plan sheet.

**CALIFORNIA STATE FIRE MARSHAL APPROVED**

Approval of this plan does not authorize or approve any omission or deviation from applicable regulations. Final approval is subject to field inspection. One set of approved plans shall be available on the project site at all times.

Reviewed by: MIKE TANAKA
Approval date: 12-14-09

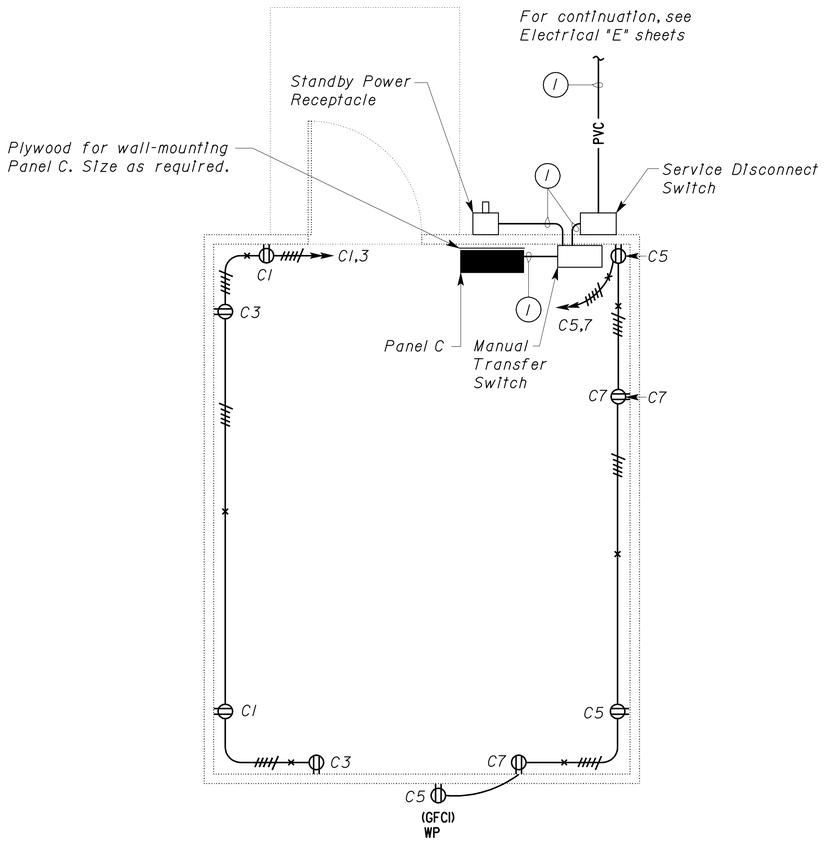


## PLAN NO. 1

SCALE 1/2" = 1'-0"

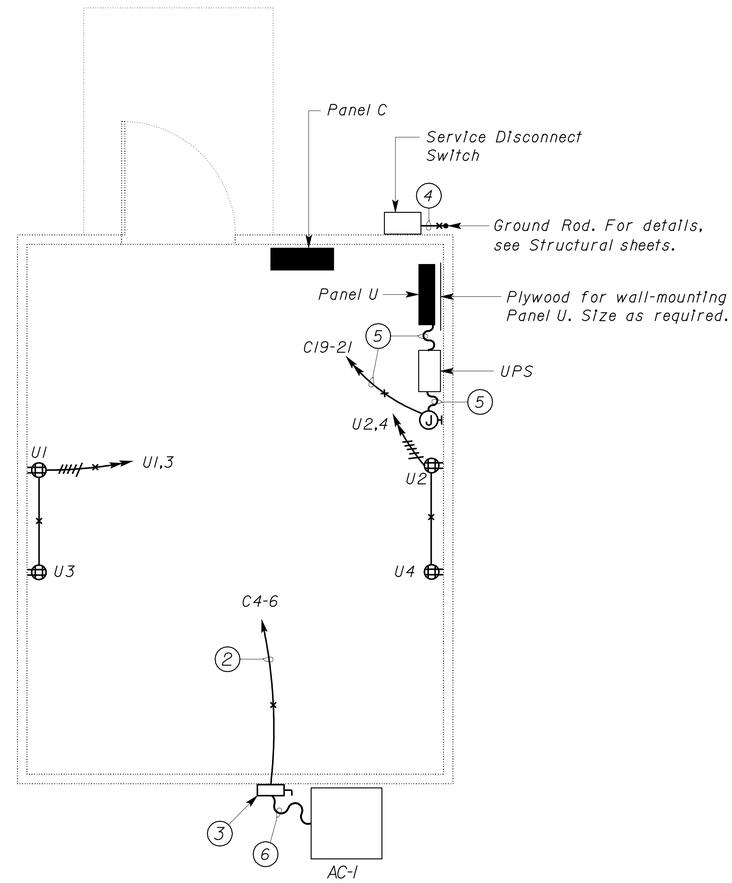


## PLAN NO. 2

SCALE 1/2" = 1'-0"

*Notes:*

1. 2"C, 3*1/0, 1*4G.
2. 3/4"C, 2*8 (C6-8), 1*10G
3. Air conditioning disconnect switch. Disconnect shall be mounted at a height as recommended by the air conditioning unit manufacturer.
4. 3/4"C, 1*4G to ground rod.
5. 1" liquidtight flexible metallic conduit, 2*6, 1*6G.
6. 3/4" liquidtight flexible metallic conduit, 2*8, 1*10G.

DESIGN SUPERVISOR
DESIGN ENGINEER

| | BY | CHECKED |
|---|---|---|
| DESIGN | Joseph Abdelsayed | J.S. Sandhu |
| DETAILS | Joseph Abdelsayed | J.S. Sandhu |
| QUANTITIES | Joseph Abdelsayed | J.S. Sandhu |

STATE OF CALIFORNIA
DEPARTMENT OF TRANSPORTATION

DIVISION OF ENGINEERING SERVICES
ELECTRICAL-MECHANICAL-WATER AND WASTEWATER DESIGN

BRIDGE NO. 4550191
POST MILE 30.3

**DISTRICT 12 COMMUNICATION HUB**

POWER PLAN 1 & 2

SHEET **EE-2**

DOES SD Imperial Rev. 9/02

ORIGINAL SCALE IN INCHES FOR REDUCED PLANS 0 1 2 3

CU 12375
EA 0K1501

DISREGARD PRINTS BEARING EARLIER REVISION DATES → 12/16/09

REVISION DATES (PRELIMINARY STAGE ONLY) SHEET OF

01-MAR-2010 13:05

ee_2.dgn

| DIST. | COUNTY | ROUTE | POST MILES TOTAL PROJECT | SHEET NO. | TOTAL SHEETS |
|---|---|---|---|---|---|
| 12 | Ora | 5 | 24.9/30.3 | 66 | 67 |

REGISTERED ELECTRICAL ENGINEER — DATE 12-16-09

REGISTERED PROFESSIONAL ENGINEER — J. ABDELSAYED — No. 18915 — Exp. 12-31-09 — ELEC — STATE OF CALIFORNIA

2-22-10
PLANS APPROVAL DATE

The State of California or its officers or agents shall not be responsible for the accuracy or completeness of electronic copies of this plan sheet.

**CALIFORNIA STATE FIRE MARSHAL APPROVED**

Approval of this plan does not authorize or approve any omission or deviation from applicable regulations. Final approval is subject to field inspection. One set of approved plans shall be available on the project site at all times.

Reviewed by: MIKE TANAKA
Approval date: 12-14-09

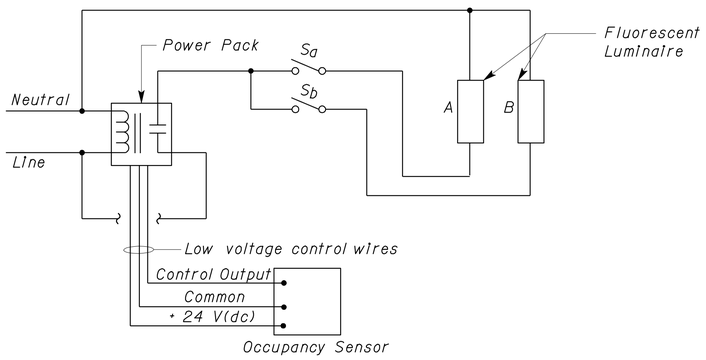


## CEILING MOUNTED OCCUPANCY SENSOR WIRING DIAGRAM

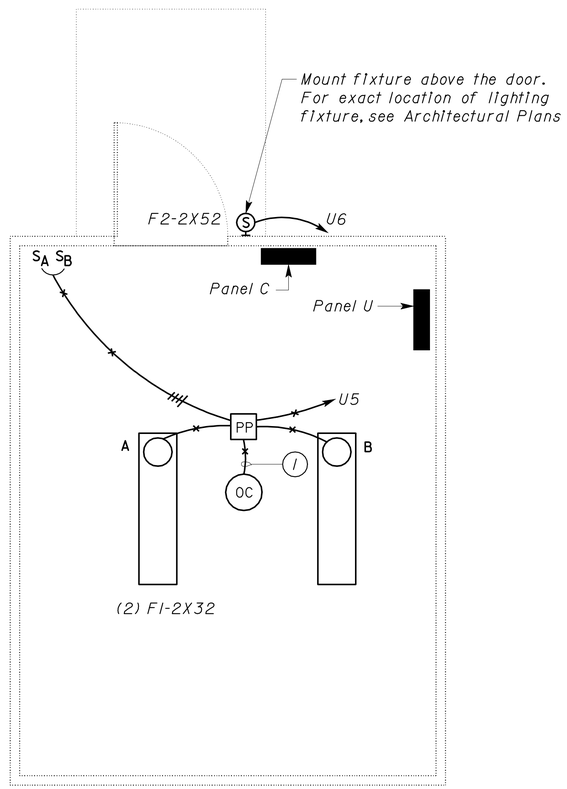


## LIGHTING PLAN

SCALE 1/2" = 1'-0"

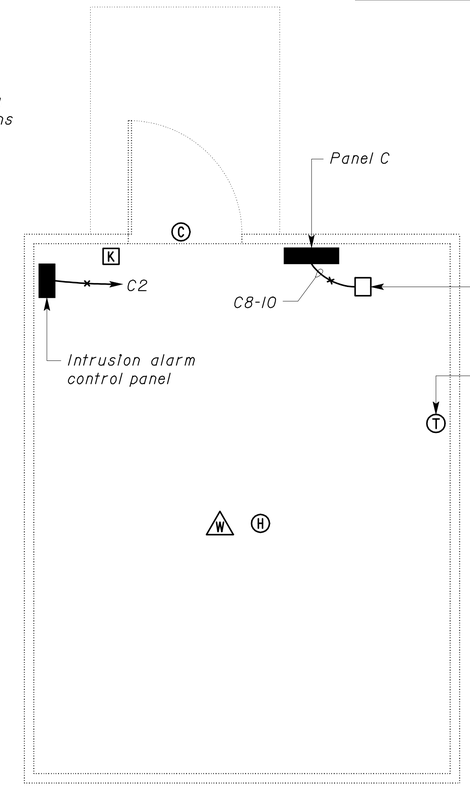


## INTRUSION ALARM SYSTEM PLAN

SCALE 1/2" = 1'-0"

Notes:

1. 1/2"C, conductors as required.

General Notes:

A. Conduit and conductor system for intrusion alarm panel is not shown.

B. Submit conduit and conductor layout for approval prior to installation.

C. Prior to installation of the heat detector, submit to the State Fire Marshall a data sheet and CSFM listing for that heat detector for approval.

CALIFORNIA ENERGY COMMISSION MANDATORY MEASURES:

BUILDING LIGHTING SHUT-OFF

1. Occupancy sensor for Communication Hub

INDOOR MULTI-LEVEL LIGHTING CONTROL

1. Multiple switches for Communication Hub. Switches are connected on load of the automatic shut-off switch that is provided for the area.

| | | |
|---|---|---|
| DESIGN | BY Joseph Abdelsayed | CHECKED J.S. Sandhu |
| DETAILS | BY Joseph Abdelsayed | CHECKED J.S. Sandhu |
| QUANTITIES | BY Joseph Abdelsayed | CHECKED J.S. Sandhu |

STATE OF CALIFORNIA DEPARTMENT OF TRANSPORTATION

DIVISION OF ENGINEERING SERVICES
ELECTRICAL-MECHANICAL-WATER AND WASTEWATER DESIGN

BRIDGE NO. 4550191
POST MILE 30.3

**DISTRICT 12 COMMUNICATION HUB**

LIGHTING AND INTRUSION ALARM SYSTEM PLAN

SHEET **EE-3**

DOES SD Imperial Rev. 9/02

ORIGINAL SCALE IN INCHES FOR REDUCED PLANS 0 1 2 3

CU 12375
EA 0K1501

DISREGARD PRINTS BEARING EARLIER REVISION DATES → 12/16/09

REVISION DATES (PRELIMINARY STAGE ONLY) SHEET OF

01-MAR-2010 13:05

ee_3.dgn

| DIST. | COUNTY | ROUTE | POST MILES TOTAL PROJECT | SHEET NO. | TOTAL SHEETS |
|---|---|---|---|---|---|
| 12 | Ora | 5 | 24.9/30.3 | 67 | 67 |

REGISTERED ELECTRICAL ENGINEER — 12-16-09 DATE

REGISTERED PROFESSIONAL ENGINEER — J. ABDELSAYED — No. 18915 — Exp. 12-31-09 — ELEC — STATE OF CALIFORNIA

2-22-10
PLANS APPROVAL DATE

The State of California or its officers or agents shall not be responsible for the accuracy or completeness of electronic copies of this plan sheet.

**CALIFORNIA STATE FIRE MARSHAL APPROVED**

Approval of this plan does not authorize or approve any omission or deviation from applicable regulations. Final approval is subject to field inspection. One set of approved plans shall be available on the project site at all times.

Reviewed by: MIKE TANAKA
Approval date: 12-14-09

MAIN: 100 A/2P CB
VOLTS: 120/240 V, 1-PHASE, 3-WIRE

PANEL C

FEEDER SIZE: 3#1/0, 1#4G
LOCATION: COMMUNICATION HUB

| DESCRIPTION | AMPERES A | AMPERES C | BRK | CKT | A C | CKT | BRK | AMPERES A | AMPERES C | DESCRIPTION |
|---|---|---|---|---|---|---|---|---|---|---|
| NORTH AND WEST RECEPTACLES | 6 | | 20/1 | 1 | | 2 | 20/1 | 2 | | INTRUSION ALARM CONTROL PANEL |
| WEST AND SOUTH RECEPTACLES | | 5 | 20/1 | 3 | | 4 | 40/2 | | 32 | AIR CONDITIONER |
| NORTH, EAST, AND OUTDOOR RECEPT. | 6 | | 20/1 | 5 | | 6 | | 32 | | |
| EAST AND SOUTH RECEPTACLES | | 5 | 20/1 | 7 | | 8 | 15/2 | | - | PHASE FAILURE RELAY |
| SPARE | - | | 20/1 | 9 | | 10 | | - | | |
| SPARE | | - | 20/1 | 11 | | 12 | 20/1 | | - | SPARE |
| SPARE | - | | 20/1 | 13 | | 14 | 20/1 | - | | SPARE |
| SPARE | | - | 20/1 | 15 | | 16 | 20/1 | | - | SPARE |
| SPARE | - | | 20/1 | 17 | | 18 | 20/1 | - | | SPARE |
| UPS | | 12 | 50/2 | 19 | | 20 | 20/1 | | - | SPARE |
| | 15 | | | 21 | | 22 | 20/1 | - | | SPARE |
| SPACE | | | | 23 | | 24 | | | | SPACE |
| SPACE | | | | 25 | | 26 | | | | SPACE |
| SPACE | | | | 27 | | 28 | | | | SPACE |
| SPACE | | | | 29 | | 30 | | | | SPACE |
| SPACE | | | | 31 | | 32 | | | | SPACE |
| SPACE | | | | 33 | | 34 | | | | SPACE |
| SPACE | | | | 35 | | 36 | | | | SPACE |
| SPACE | | | | 37 | | 38 | | | | SPACE |
| SPACE | | | | 39 | | 40 | | | | SPACE |
| SPACE | | | | 41 | | 42 | | | | SPACE |

| A | C | |
|---|---|---|
| 61 | 54 | TOTAL CONNECTED LOAD (AMPERES PER PHASE) |

MAIN: 100 A MAIN LUGS
VOLTS: 120/240 V, 1-PHASE, 3-WIRE

PANEL U

FEEDER SIZE: 2#8, 1#10G
LOCATION: COMMUNICATION HUB

| DESCRIPTION | AMPERES A | AMPERES C | BRK | CKT | A C | CKT | BRK | AMPERES A | AMPERES C | DESCRIPTION |
|---|---|---|---|---|---|---|---|---|---|---|
| WEST FOURPLEX | 6 | | 20/1 | 1 | | 2 | 20/1 | 6 | | EAST FOURPLEX |
| WEST FOURPLEX | | 6 | 20/1 | 3 | | 4 | 20/1 | | 6 | EAST FOURPLEX |
| INDOOR LIGHTS | 2 | | 20/1 | 5 | | 6 | 20/1 | 1 | | OUTDOOR LIGHT |
| SPACE | | | | 7 | | 8 | | | | SPACE |
| SPACE | | | | 9 | | 10 | | | | SPACE |
| SPACE | | | | 11 | | 12 | | | | SPACE |

| A | C | |
|---|---|---|
| 15 | 12 | TOTAL CONNECTED LOAD (AMPERES PER PHASE) |

| | | | |
|---|---|---|---|
| DESIGN | BY Joseph Abdelsayed | CHECKED J.S. Sandhu | |
| DETAILS | BY Joseph Abdelsayed | CHECKED J.S. Sandhu | |
| QUANTITIES | BY Joseph Abdelsayed | CHECKED J.S. Sandhu | |

STATE OF CALIFORNIA
DEPARTMENT OF TRANSPORTATION

DIVISION OF ENGINEERING SERVICES
ELECTRICAL-MECHANICAL-WATER AND WASTEWATER DESIGN

BRIDGE NO. 4550191
POST MILE 30.3

# DISTRICT 12 COMMUNICATION HUB

## PANEL SCHEDULE

SHEET EE-4

DOES SD Imperial Rev. 9/02

ORIGINAL SCALE IN INCHES FOR REDUCED PLANS 0 1 2 3

CU 12375
EA 0K1501

DISREGARD PRINTS BEARING EARLIER REVISION DATES → 12/16/09

REVISION DATES (PRELIMINARY STAGE ONLY) | SHEET | OF

01-MAR-2010 13:06

ee_4.dgn