Dist	COUNTY	ROUTE	POST MILES TOTAL PROJECT	SHEET No.	TOTAL SHEETS
12	Ora	39	3.6	1	45

ACHSSTPH-P039(022)E

STATE OF CALIFORNIA
DEPARTMENT OF TRANSPORTATION

PROJECT PLANS FOR CONSTRUCTION ON
STATE HIGHWAY

IN ORANGE COUNTY
IN HUNTINGTON BEACH
AT TALBERT AVENUE

TO BE SUPPLEMENTED BY STANDARD PLANS DATED MAY 2006

INDEX OF PLANS

SHEET No.	DESCRIPTION
1	TITLE AND LOCATION MAP
2	TYPICAL CROSS SECTIONS
3	LAYOUT
4-6	CONSTRUCTION DETAILS
7	UTILITY PLAN
8	CONSTRUCTION AREA SIGNS
9-15	TRAFFIC HANDLING PLANS AND QUANTITIES
16-17	PAVEMENT DELINEATION PLAN AND QUANTITIES
18-19	SIGN PLAN AND QUANTITIES
20	SUMMARY OF QUANTITIES
21	PLANTING LIST AND PLANT REMOVAL
22	STAMPED CONCRETE AND PLANTING PLAN
23	IRRIGATION PLAN
24-25	ELECTRICAL PLANS
26-45	REVISED AND NEW STANDARD PLANS

THE STANDARD PLANS LIST APPLICABLE TO THIS CONTRACT IS INCLUDED IN THE NOTICE TO BIDDERS AND SPECIAL PROVISIONS BOOK.

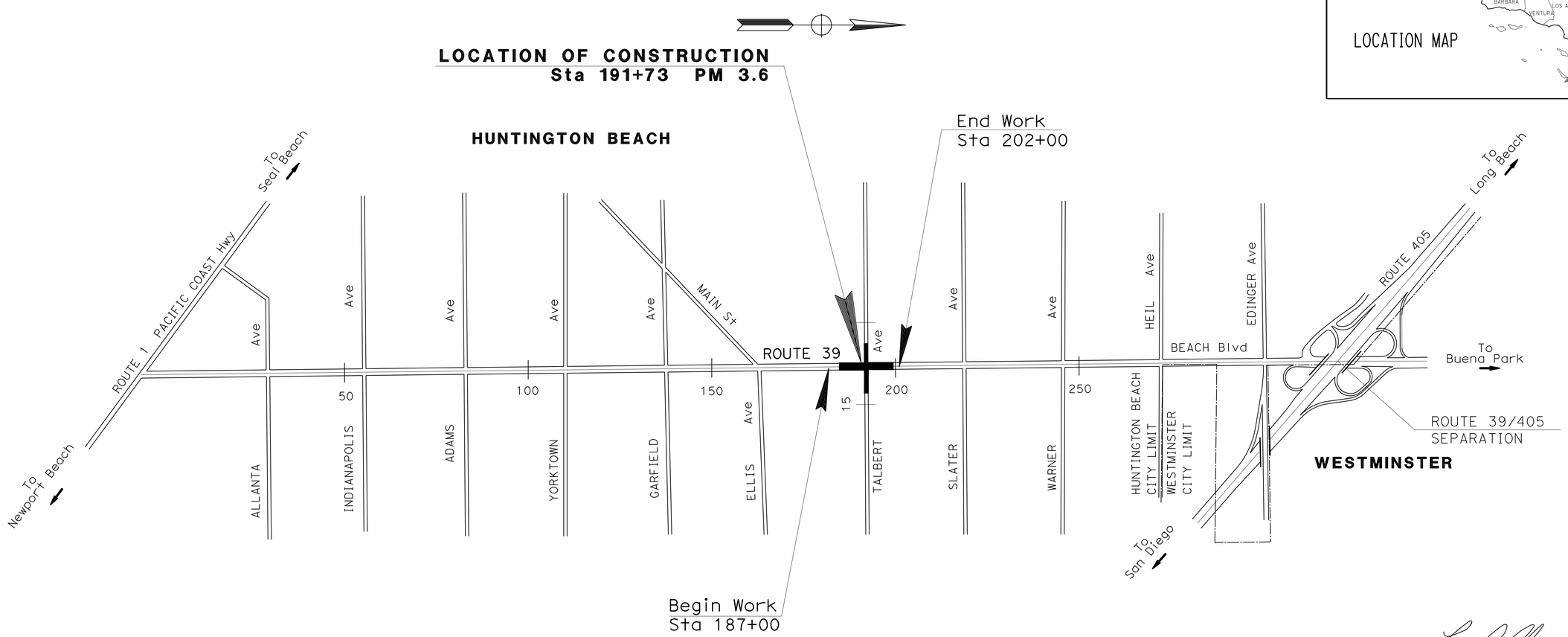

NO SCALE

PROJECT MANAGER: VINH PHAM

DESIGN ENGINEER: LISA ALVISO

10-01-09
PROJECT ENGINEER DATE
REGISTERED CIVIL ENGINEER

December 21, 2009
PLANS APPROVAL DATE

REGISTERED PROFESSIONAL ENGINEER — LISA ALVISO — No. C46382 — Exp. 3-31-11 — CIVIL — STATE OF CALIFORNIA

THE STATE OF CALIFORNIA OR ITS OFFICERS OR AGENTS SHALL NOT BE RESPONSIBLE FOR THE ACCURACY OR COMPLETENESS OF SCANNED COPIES OF THIS PLAN SHEET.

THE CONTRACTOR SHALL POSSESS THE CLASS (OR CLASSES) OF LICENSE AS SPECIFIED IN THE "NOTICE TO BIDDERS."

CONTRACT No. **12-0K2604**

LAST REVISION 09-10-09 | DATE PLOTTED => 10-MAR-2010 | TIME PLOTTED => 08:16

Dist	COUNTY	ROUTE	POST MILES TOTAL PROJECT	SHEET No.	TOTAL SHEETS
12	Ora	39	3.6	2	45

REGISTERED CIVIL ENGINEER DATE 10-01-09

PLANS APPROVAL DATE 12-21-09

REGISTERED PROFESSIONAL ENGINEER LISA ALVISO No. C46382 Exp. 3-31-11 CIVIL STATE OF CALIFORNIA

THE STATE OF CALIFORNIA OR ITS OFFICERS OR AGENTS SHALL NOT BE RESPONSIBLE FOR THE ACCURACY OR COMPLETENESS OF ELECTRONIC COPIES OF THIS PLAN SHEET.

NOTES:

1. DIMENSIONS OF THE STRUCTURAL SECTIONS ARE SUBJECT TO TOLERANCES SPECIFIED IN THE STANDARD SPECIFICATIONS.
2. SUPERELEVATION AS SHOWN OR AS DIRECTED BY THE ENGINEER.

ABBREVIATION:

R-HMA - RUBBERIZED HOT MIX ASPHALT (TYPE G)

EXISTING STRUCTURAL SECTIONS

4 — 0.40' AC
1.17' AB

5 — 0.10' RUBBERIZED AC (TYPE G)
0.50' AC
1.67' AB

TYPICAL STRUCTURAL SECTIONS

1 — OVERLAY 0.20' R-HMA (TYPE G)
1.35' HMA (TYPE A)
0.50' AS CLASS 2

2 — 1.40' AS CLASS 2

3 — COLD PLANE AC PAVEMENT (0.20' Max)
0.20' HMA (TYPE A)

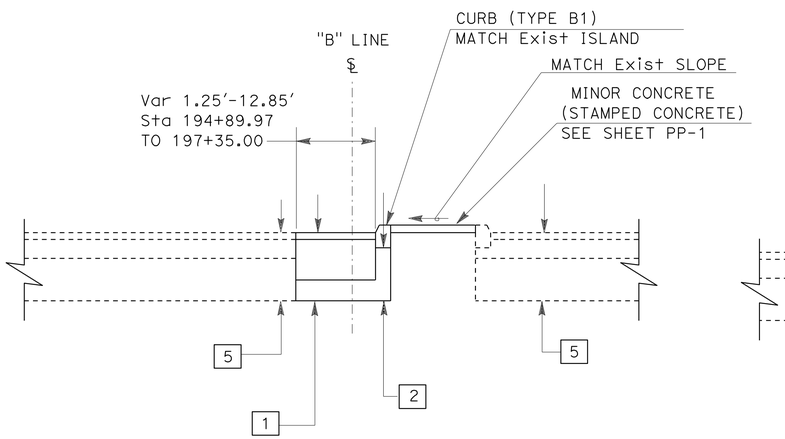

ROUTE 39
SOUTHBOUND LEFT TURN MEDIAN ISLAND
"B" Sta 194+89.97 TO 197+35.00

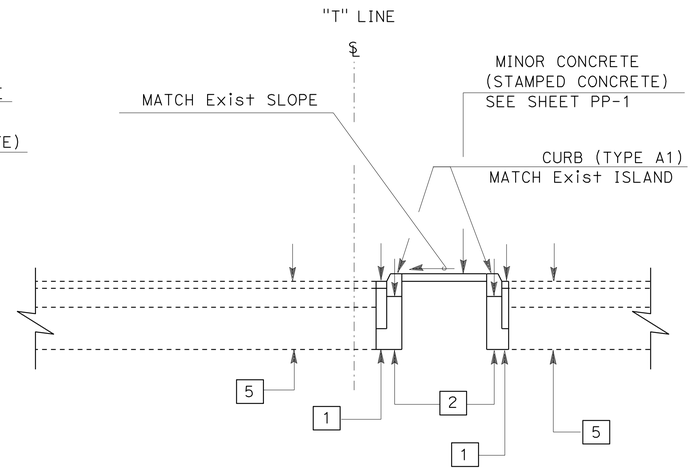

TALBERT Ave
EAST MEDIAN ISLAND
"T" Sta 10+39.31 TO Sta 10+49.07

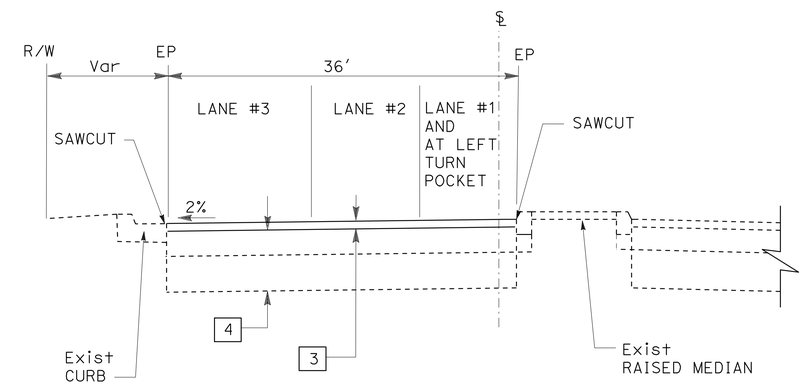

EAST TALBERT Ave
"T" Sta 10+39.78 To Sta 10+89.78
"T" Sta 12+39.80 To Sta 12+49.80

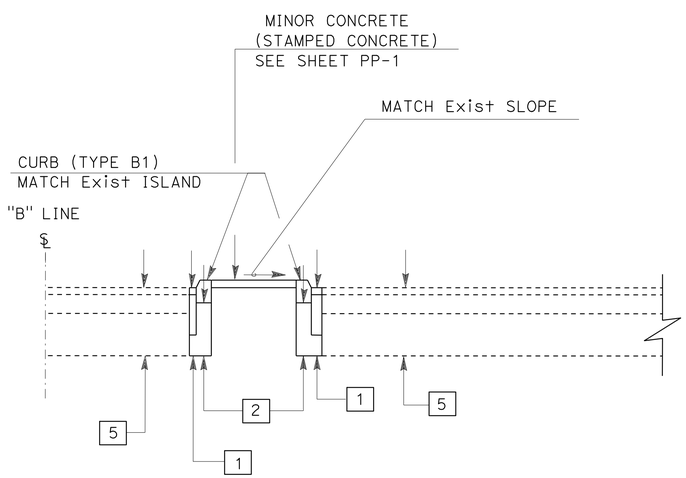

ROUTE 39
NORTH MEDIAN ISLAND
"B" Sta 192+32.61 TO 192+42.84

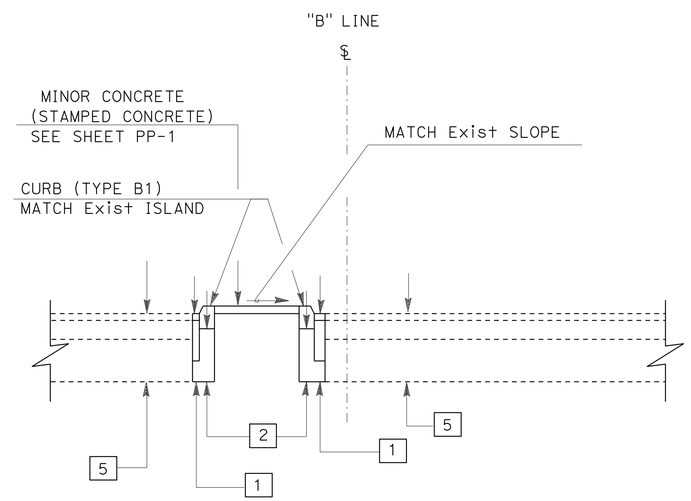

ROUTE 39
SOUTH MEDIAN ISLAND
"B" Sta 191+00.72 TO 191+14.91

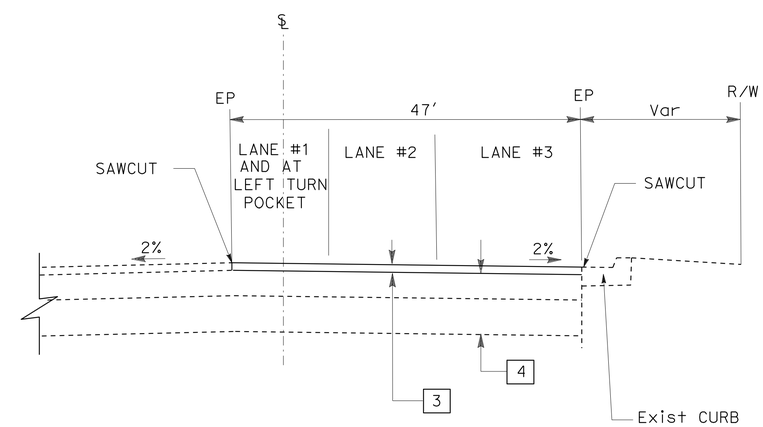

WEST TALBERT Ave
"T" Sta 6+78.40 To Sta 6+88.40
"T" Sta 8+38.68 To Sta 8+88.68

TYPICAL CROSS SECTIONS
NO SCALE

X-1

STATE OF CALIFORNIA - DEPARTMENT OF TRANSPORTATION
Caltrans
DESIGN BRANCH B
FUNCTIONAL SUPERVISOR: LISA ALVISO
CALCULATED-DESIGNED BY: JOLENE MAI
CHECKED BY: LISA ALVISO
REVISED BY
DATE REVISED

LAST REVISION 9-21-09
DATE PLOTTED => 22-DEC-2009
TIME PLOTTED => 13:14

Dist	COUNTY	ROUTE	POST MILES TOTAL PROJECT	SHEET No.	TOTAL SHEETS
12	Ora	39	3.6	3	45

REGISTERED CIVIL ENGINEER 10-01-09 DATE

12-21-09
PLANS APPROVAL DATE

REGISTERED PROFESSIONAL ENGINEER LISA ALVISO No. C46382 Exp. 3-31-11 CIVIL STATE OF CALIFORNIA

THE STATE OF CALIFORNIA OR ITS OFFICERS OR AGENTS SHALL NOT BE RESPONSIBLE FOR THE ACCURACY OR COMPLETENESS OF SCANNED COPIES OF THIS PLAN SHEET.

NOTE:

FOR ACCURATE RIGHT OF WAY DATA, CONTACT RIGHT OF WAY ENGINEERING AT THE DISTRICT OFFICE.

LEGEND:

- ROADWAY EXCAVATION
- REMOVE CONCRETE CURB
- REMOVE CONCRETE ISLAND (PORTION)
- CONCRETE B-1 CURB
- REMOVE CONCRETE
- MINOR CONCRETE (MISCELLANEOUS CONSTRUCTION)
- MINOR CONCRETE (STAMPED CONCRETE)
- COLD PLANE ASPHALT CONCRETE PAVEMENT (0.20' Max)
- PLANTING

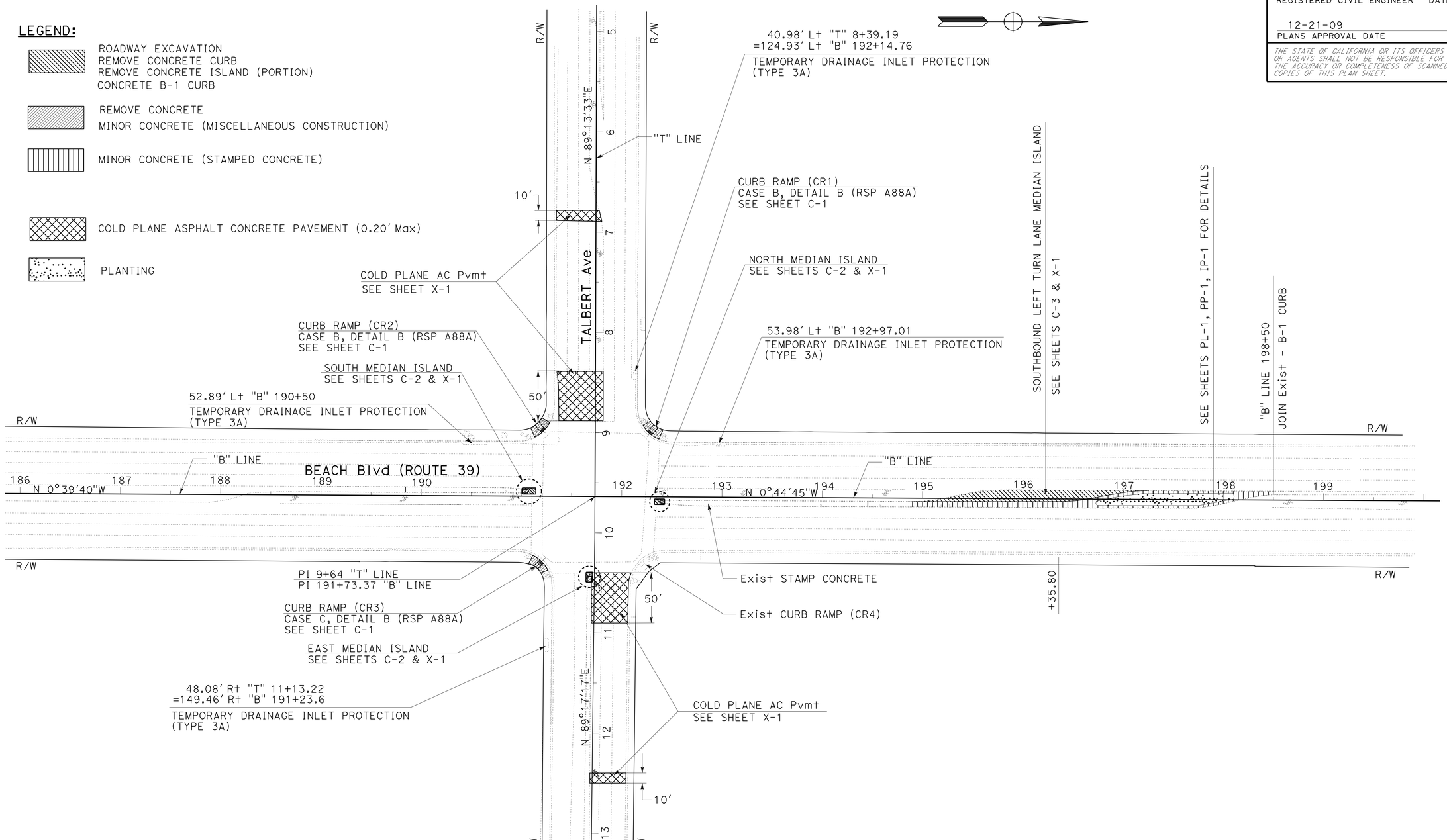

LAYOUT

SCALE: 1" = 50'

L-1

REVISED BY	DATE REVISED
JOLENE MAI	LISA ALVISO

CALCULATED-DESIGNED BY / CHECKED BY

FUNCTIONAL SUPERVISOR: LISA ALVISO

STATE OF CALIFORNIA - DEPARTMENT OF TRANSPORTATION

Caltrans®

DESIGN BRANCH B

LAST REVISION 09-10-09 | DATE PLOTTED => 22-DEC-2009 | TIME PLOTTED => 13:14

Dist	COUNTY	ROUTE	POST MILES TOTAL PROJECT	SHEET No.	TOTAL SHEETS
12	Ora	39	3.6	4	45

REGISTERED CIVIL ENGINEER 10-01-09 DATE

12-21-09
PLANS APPROVAL DATE

REGISTERED PROFESSIONAL ENGINEER LISA ALVISO No. C46382 Exp. 3-31-11 CIVIL STATE OF CALIFORNIA

THE STATE OF CALIFORNIA OR ITS OFFICERS OR AGENTS SHALL NOT BE RESPONSIBLE FOR THE ACCURACY OR COMPLETENESS OF ELECTRONIC COPIES OF THIS PLAN SHEET.

LEGEND:

OVERLAY 0.20′ R-HMA (TYPE G)
1.35′ HMA (TYPE A)
0.50′ AS CLASS 2
MINOR CONCRETE (STAMPED CONCRETE)

ABBREVATION:

R-HMA - RUBBERIZED HOT MIX ASPHALT (TYPE G)

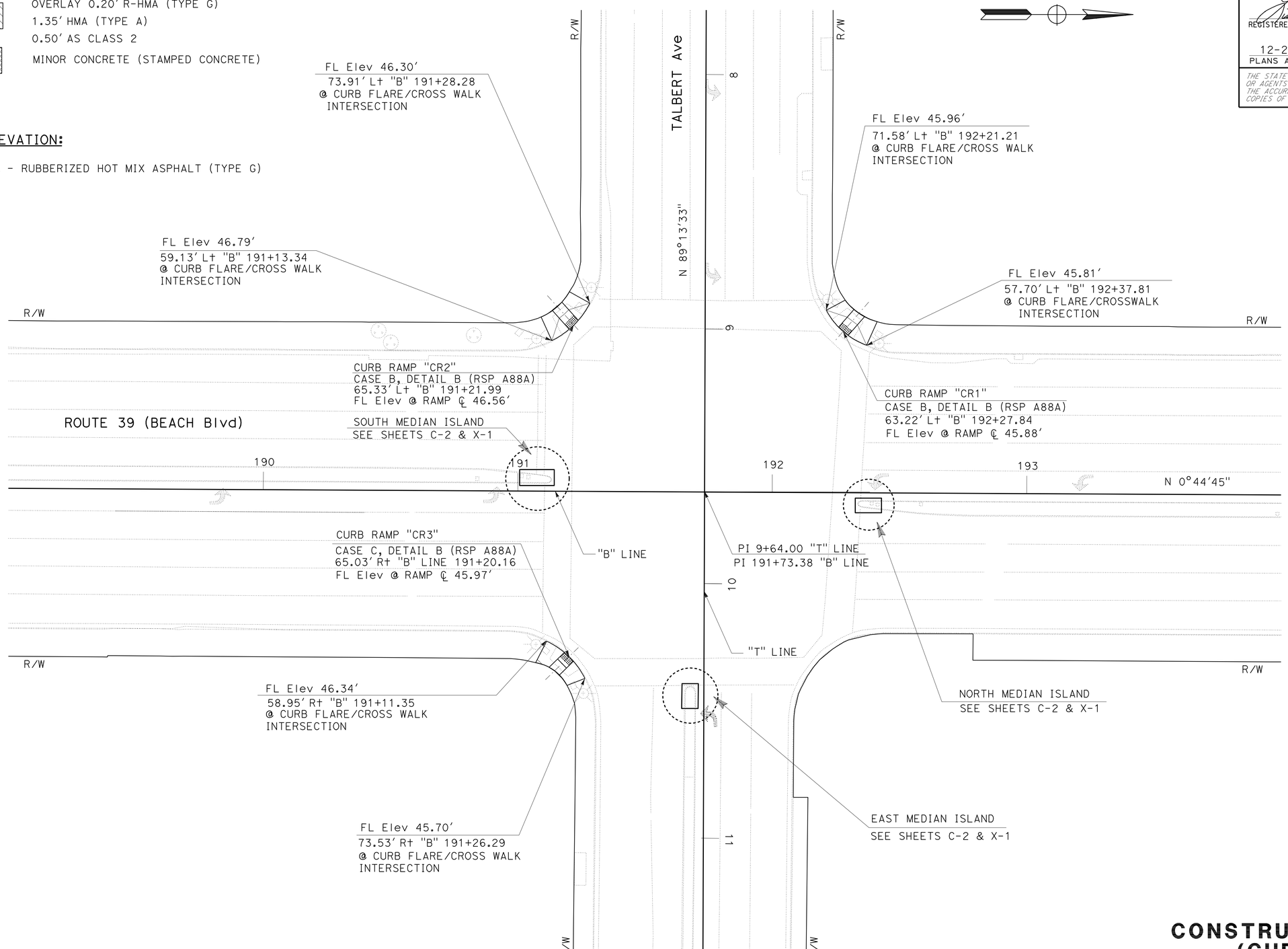

CONSTRUCTION DETAILS (CURB RAMPS)

SCALE: 1" = 20′

C-1

REVISED BY	DATE REVISED
JOLENE MAI	LISA ALVISO
CALCULATED-DESIGNED BY	CHECKED BY
FUNCTIONAL SUPERVISOR	LISA ALVISO

STATE OF CALIFORNIA - DEPARTMENT OF TRANSPORTATION
Caltrans DESIGN BRANCH B

LAST REVISION 06-30-09 | DATE PLOTTED => 22-DEC-2009 | TIME PLOTTED => 13:14

Dist	COUNTY	ROUTE	POST MILES TOTAL PROJECT	SHEET No.	TOTAL SHEETS
12	Ora	39	3.6	5	45

REGISTERED CIVIL ENGINEER 10-01-09 DATE

12-21-09
PLANS APPROVAL DATE

REGISTERED PROFESSIONAL ENGINEER LISA ALVISO No. C46382 Exp. 3-31-11 CIVIL STATE OF CALIFORNIA

THE STATE OF CALIFORNIA OR ITS OFFICERS OR AGENTS SHALL NOT BE RESPONSIBLE FOR THE ACCURACY OR COMPLETENESS OF ELECTRONIC COPIES OF THIS PLAN SHEET.

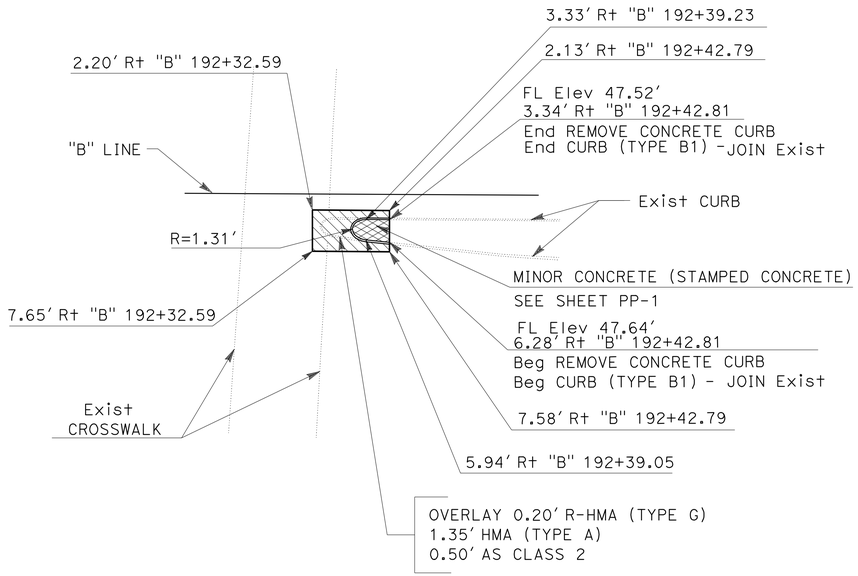

ROUTE 39
NORTH MEDIAN ISLAND
(SEE SHEET X-1 FOR DETAILS)

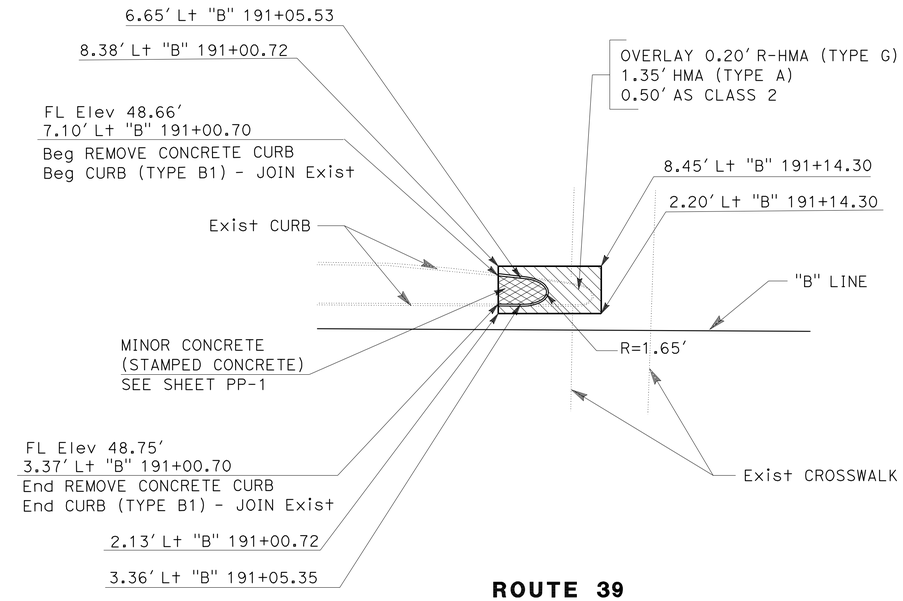

ROUTE 39
SOUTH MEDIAN ISLAND
(SEE SHEET X-1 FOR DETAILS)

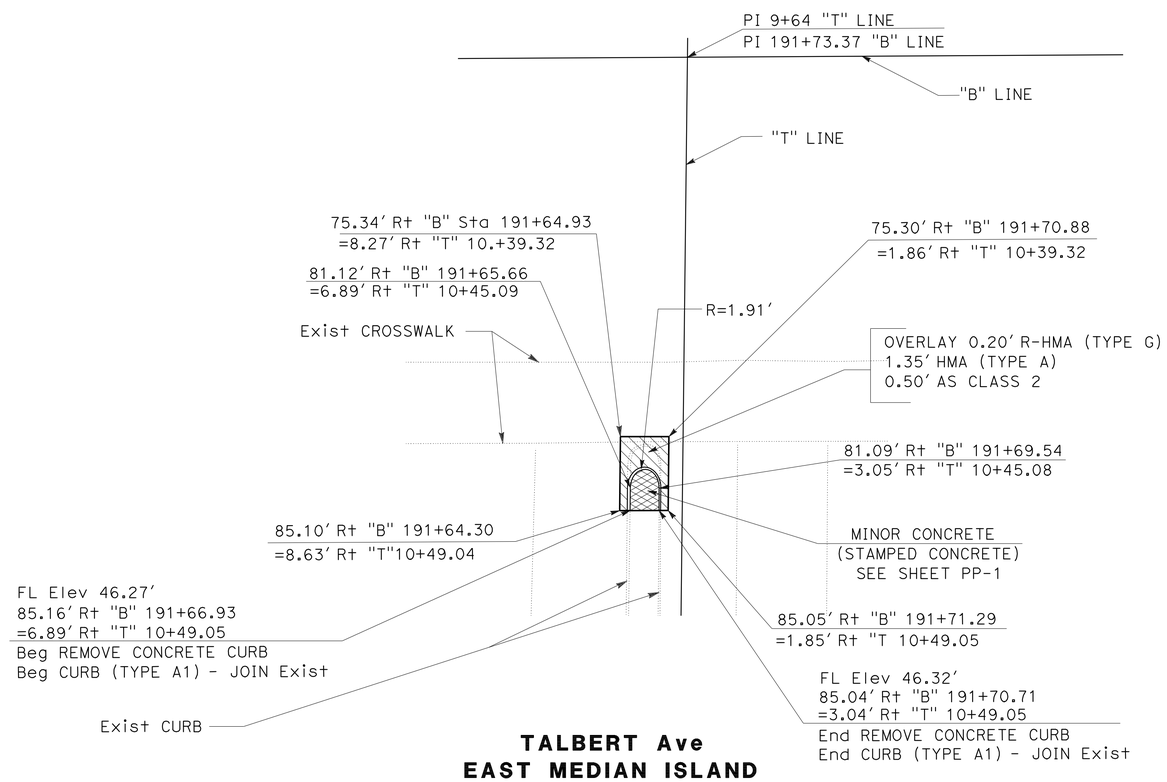

TALBERT Ave
EAST MEDIAN ISLAND
(SEE SHEET X-1 FOR DETAILS)

CONSTRUCTION DETAILS

NO SCALE

C-2

STATE OF CALIFORNIA - DEPARTMENT OF TRANSPORTATION
Caltrans
DESIGN BRANCH B
FUNCTIONAL SUPERVISOR: LISA ALVISO
CALCULATED-DESIGNED BY: JOLENE MAI
CHECKED BY: LISA ALVISO
REVISED BY
DATE REVISED

LAST REVISION 09-10-09
DATE PLOTTED => 22-DEC-2009
TIME PLOTTED => 13:14

Dist	COUNTY	ROUTE	POST MILES TOTAL PROJECT	SHEET No.	TOTAL SHEETS
12	Ora	39	3.6	6	45

REGISTERED CIVIL ENGINEER 10-01-09 DATE

12-21-09
PLANS APPROVAL DATE

REGISTERED PROFESSIONAL ENGINEER
LISA ALVISO
No. C46382
Exp. 3-31-11
CIVIL
STATE OF CALIFORNIA

THE STATE OF CALIFORNIA OR ITS OFFICERS OR AGENTS SHALL NOT BE RESPONSIBLE FOR THE ACCURACY OR COMPLETENESS OF SCANNED COPIES OF THIS PLAN SHEET.

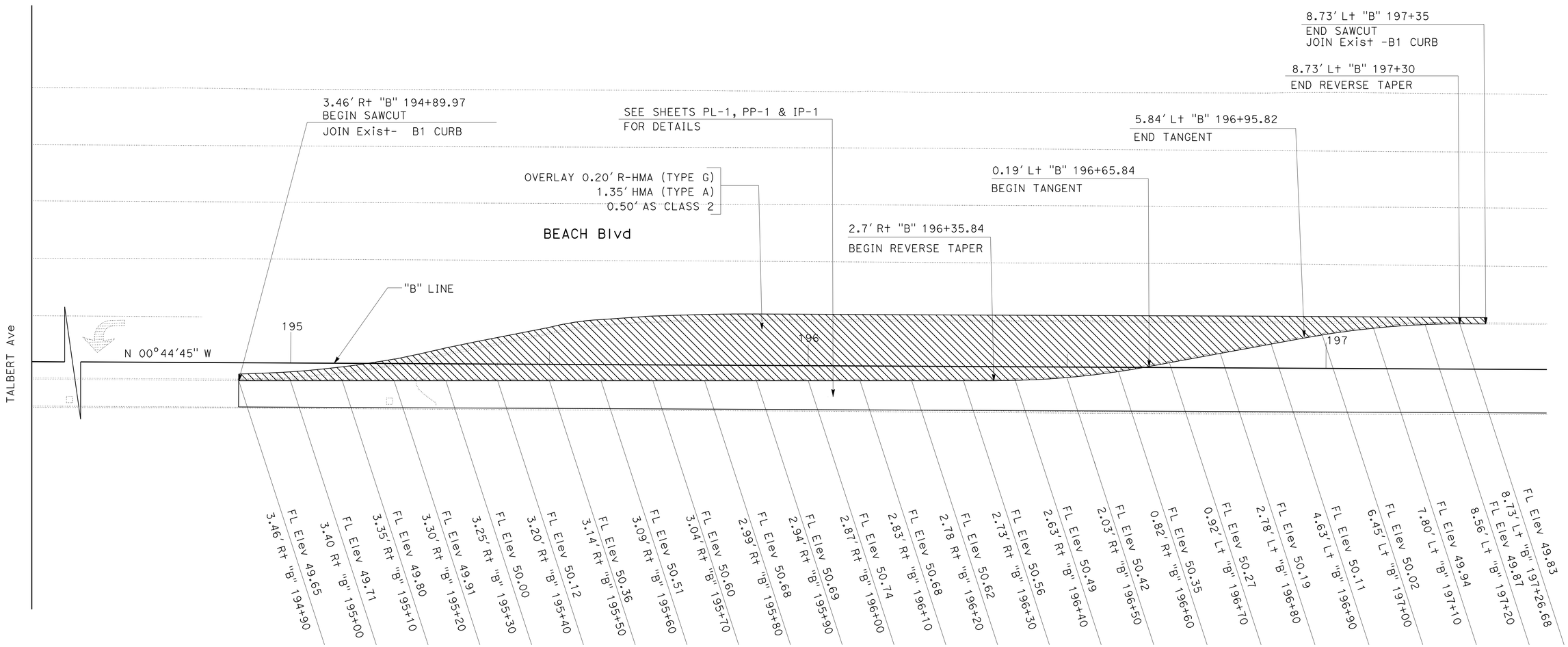

ROUTE 39
SOUTHBOUND LEFT TURN LANE MEDIAN ISLAND

(SEE SHEET X-1 FOR DETAILS)

CONSTRUCTION DETAILS
PAVEMENT AND MEDIAN ISLAND

SCALE: 1" = 10'

C-3

REVISED BY	DATE REVISED
JOLENE MAI	LISA ALVISO
CALCULATED-DESIGNED BY	CHECKED BY
FUNCTIONAL SUPERVISOR	LISA ALVISO

STATE OF CALIFORNIA - DEPARTMENT OF TRANSPORTATION
Caltrans
DESIGN BRANCH B

LAST REVISION 09-10-09 | DATE PLOTTED => 22-DEC-2009 | TIME PLOTTED => 13:14

Dist	COUNTY	ROUTE	POST MILES TOTAL PROJECT	SHEET No.	TOTAL SHEETS
12	Ora	39	3.6	7	45

REGISTERED CIVIL ENGINEER 10-01-09 DATE

12-21-09
PLANS APPROVAL DATE

REGISTERED PROFESSIONAL ENGINEER LISA ALVISO No. C46382 Exp. 3-31-11 CIVIL STATE OF CALIFORNIA

THE STATE OF CALIFORNIA OR ITS OFFICERS OR AGENTS SHALL NOT BE RESPONSIBLE FOR THE ACCURACY OR COMPLETENESS OF SCANNED COPIES OF THIS PLAN SHEET.

NOTES:

1. LOCATIONS OF EXISTING UTILITY FACILITIES SHOW ON THIS PLAN ARE APPROXIMATE AND SHALL BE VERIFIED BY THE CONTRACTOR PRIOR TO CONSTRUCTION.
2. UTILITY OWNERSHIP ON THIS PROJECT:

   STORM DRAIN - ORANGE COUNTY FLOOD CONTROL DISTRICT
   WATER - CITY OF HUNTINGTON BEACH
   GAS - SOUTHERN CALIFORNIA GAS
   ELECTRIC - SOUTHERN CALIFORNIA EDISON
   TELEPHONE - VERIZON
   CABLE - TIME WARNER
   SEWER - ORANGE COUNTY SANITATION DISTRICT

ABBREVIATIONS

HB - CITY OF HUNTINGTON BEACH
OCFCD - ORANGE COUNTY FLOOD CONTROL DISTRICT
OCSD - ORANGE COUNTY SANITATION DISTRICT
SCE - SOUTHERN CALIFORNIA EDISON
SCG - SOUTHERN CALIFORNIA GAS
TW - TIME WARNER
VER - VERIZON
CMPA - CORRUGATED METAL PIPE ARCH
COMM - COMMUNICATON
UG - UNDERGROUND

LEGEND

(X) POTHOLE NUMBER

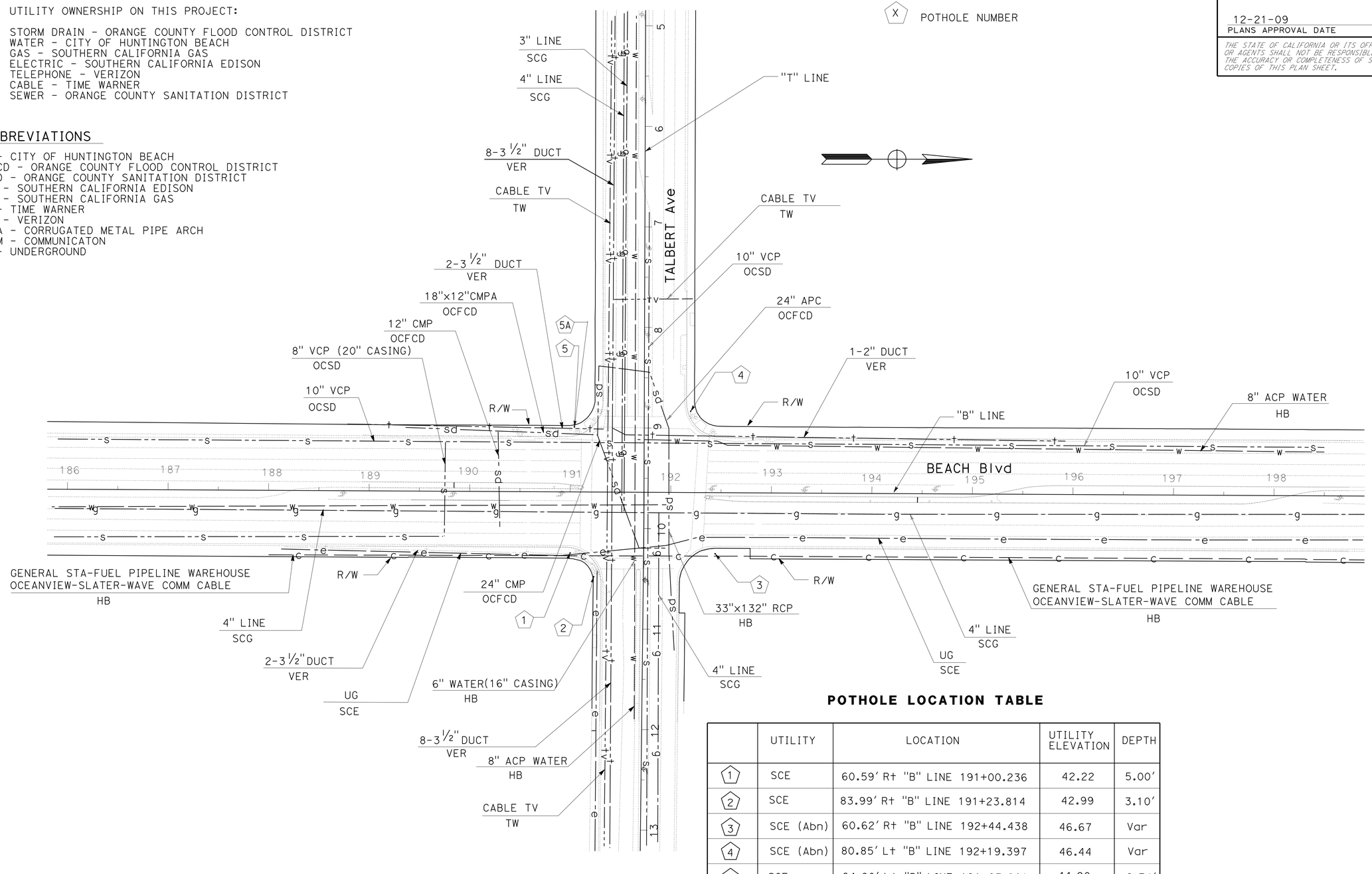

POTHOLE LOCATION TABLE

	UTILITY	LOCATION	UTILITY ELEVATION	DEPTH
1	SCE	60.59' R+ "B" LINE 191+00.236	42.22	5.00'
2	SCE	83.99' R+ "B" LINE 191+23.814	42.99	3.10'
3	SCE (Abn)	60.62' R+ "B" LINE 192+44.438	46.67	Var
4	SCE (Abn)	80.85' L+ "B" LINE 192+19.397	46.44	Var
5	SCE	64.80' L+ "B" LINE 191+03.901	44.90	2.74'
5A	VER	64.80' L+ "B" LINE 191+03.901	42.74	4.90'

THIS PLAN ACCURATE FOR UTILITY WORK ONLY.

EXISTING UTILITY PLAN

SCALE: 1" = 50'

U-1

REVISED BY	DATE REVISED
JOLENE MAI	LISA ALVISO
CALCULATED-DESIGNED BY	CHECKED BY
FUNCTIONAL SUPERVISOR	LISA ALVISO

STATE OF CALIFORNIA - DEPARTMENT OF TRANSPORTATION
Caltrans
DESIGN BRANCH B

LAST REVISION 9-21-09
DATE PLOTTED => 22-DEC-2009
TIME PLOTTED => 13:15

Dist	COUNTY	ROUTE	POST MILES TOTAL PROJECT	SHEET No.	TOTAL SHEETS
12	Ora	39	3.6	8	45

REGISTERED CIVIL ENGINEER DATE 10-01-09

12-21-09
PLANS APPROVAL DATE

REGISTERED PROFESSIONAL ENGINEER
LISA ALVISO
No. C46382
Exp. 3-31-11
CIVIL
STATE OF CALIFORNIA

THE STATE OF CALIFORNIA OR ITS OFFICERS OR AGENTS SHALL NOT BE RESPONSIBLE FOR THE ACCURACY OR COMPLETENESS OF ELECTRONIC COPIES OF THIS PLAN SHEET.

NOTE:

LOCATION OF CONSTRUCTION AREA SIGNS SHOWN ARE APPROXIMATE.
EXACT LOCATION TO BE DETERMINED BY THE ENGINEER.

LEGEND:

CONSTRUCTION AREA SIGN, MOUNTED ON TYPE III BARRICADE

CONSTRUCTION AREA SIGN NUMBER

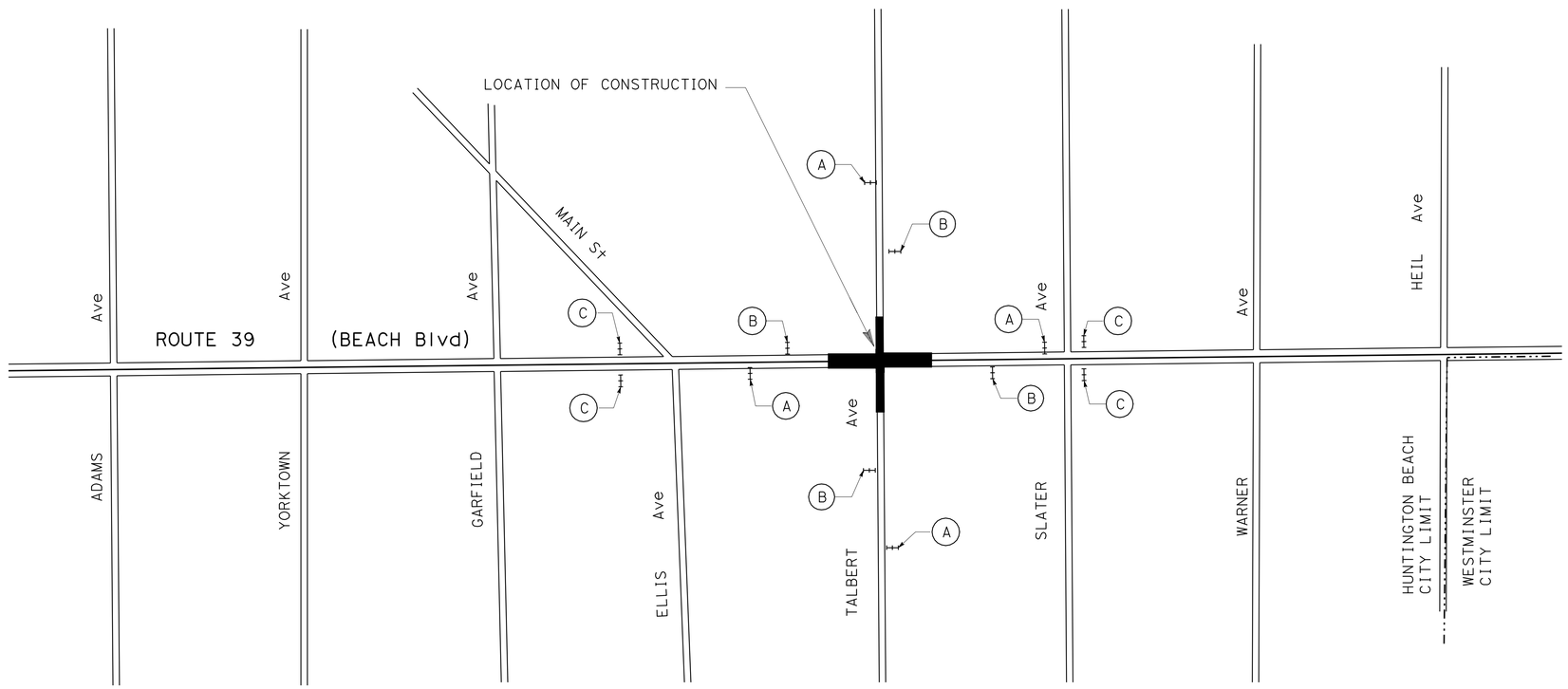

CONSTRUCTION AREA SIGNS

SIGN No.	SIGN CODE	PANEL SIZE	DESCRIPTION	TOTAL No. OF SIGNS
A	W20-1	36" x 36"	ROAD WORK AHEAD	4
B	G20-2	36" x 18"	END ROAD WORK	4
C	R9-11	36" x 24"	SIDEWALK CLOSED AHEAD ← CROSS HERE	4

CONSTRUCTION AREA SIGNS

NO SCALE

THIS PLAN ACCURATE FOR CONSTRUCTION AREA SIGNS WORK ONLY.

CS-1

STATE OF CALIFORNIA - DEPARTMENT OF TRANSPORTATION
Caltrans
DESIGN BRANCH B

FUNCTIONAL SUPERVISOR: LISA ALVISO
CALCULATED-DESIGNED BY: JOLENE MAI
CHECKED BY: LISA ALVISO
REVISED BY
DATE REVISED

LAST REVISION 09-10-09
DATE PLOTTED => 22-DEC-2009
TIME PLOTTED => 13:15

Dist	COUNTY	ROUTE	POST MILES TOTAL PROJECT	SHEET No.	TOTAL SHEETS
12	Ora	39	3.6	9	45

REGISTERED CIVIL ENGINEER 10-01-09 DATE

12-21-09
PLANS APPROVAL DATE

REGISTERED PROFESSIONAL ENGINEER LISA ALVISO No. C46382 Exp. 3-31-11 CIVIL STATE OF CALIFORNIA

THE STATE OF CALIFORNIA OR ITS OFFICERS OR AGENTS SHALL NOT BE RESPONSIBLE FOR THE ACCURACY OR COMPLETENESS OF SCANNED COPIES OF THIS PLAN SHEET.

NOTES:

1- LOCATION OF PORTABLE CHANGEABLE MESSAGE SIGNS ARE APPROXIMATE. EXACT LOCATION AND FINAL MESSAGE DISPLAY WILL BE DETERMINE BY ENGINEER.

2- TRAFFIC CONES 20′ Max SPACING.

LEGEND:

- BARRICADE (TYPE II) WITH CONSTRUCTION AREA SIGN
- FAS- FLASHING ARROW SIGN
- TRAFFIC CONE
- WORK AREA
- PCMS- PORTABLE CHANGEABLE MESSAGE SIGN

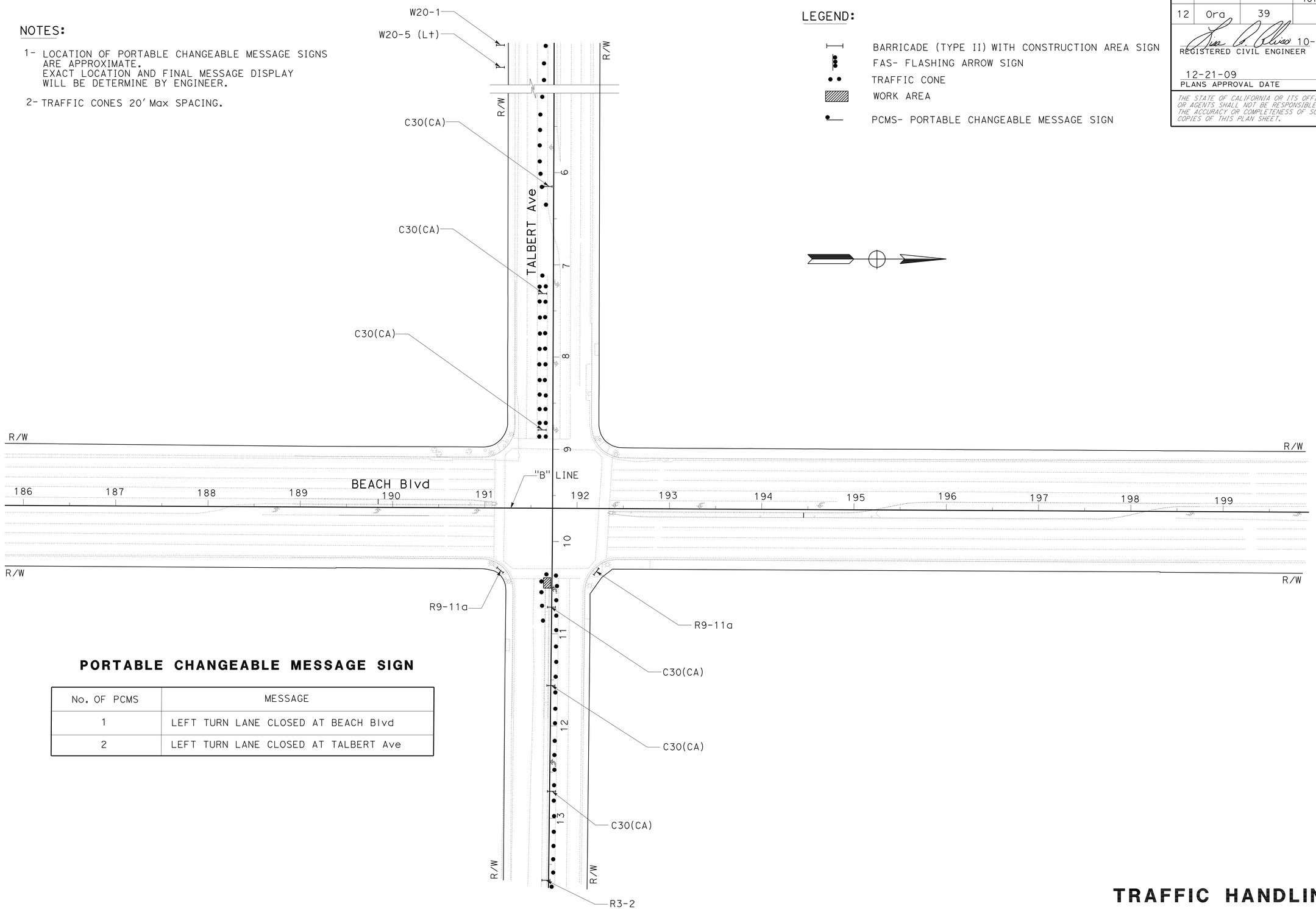

PORTABLE CHANGEABLE MESSAGE SIGN

No. OF PCMS	MESSAGE
1	LEFT TURN LANE CLOSED AT BEACH Blvd
2	LEFT TURN LANE CLOSED AT TALBERT Ave

TRAFFIC HANDLING PLAN

SCALE: 1" = 50′

TH-1

THIS PLAN ACCURATE FOR TRAFFIC HANDLING WORK ONLY.

STATE OF CALIFORNIA - DEPARTMENT OF TRANSPORTATION

Caltrans

DESIGN BRANCH B

FUNCTIONAL SUPERVISOR: LISA ALVISO

CALCULATED-DESIGNED BY: JOLENE MAI

CHECKED BY: LISA ALVISO

REVISED BY / DATE REVISED

LAST REVISION 09-10-09

DATE PLOTTED => 23-DEC-2009
TIME PLOTTED => 05:46

Dist	COUNTY	ROUTE	POST MILES TOTAL PROJECT	SHEET No.	TOTAL SHEETS
12	Org	39	3.6	10	45

REGISTERED CIVIL ENGINEER 10-01-09 DATE

12-21-09
PLANS APPROVAL DATE

REGISTERED PROFESSIONAL ENGINEER
LISA ALVISO
No. C46382
Exp. 3-31-11
CIVIL
STATE OF CALIFORNIA

THE STATE OF CALIFORNIA OR ITS OFFICERS OR AGENTS SHALL NOT BE RESPONSIBLE FOR THE ACCURACY OR COMPLETENESS OF SCANNED COPIES OF THIS PLAN SHEET.

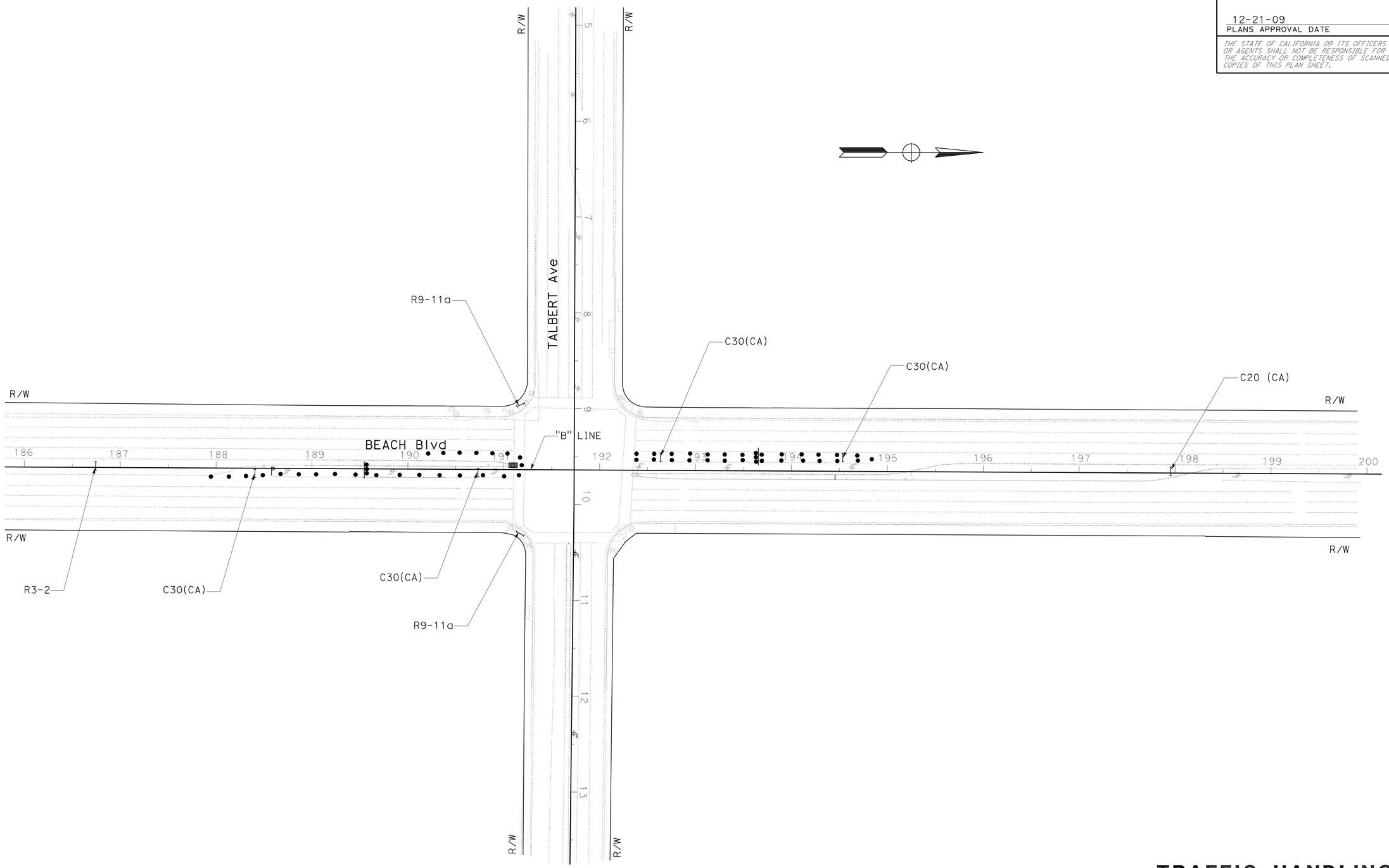

TRAFFIC HANDLING PLAN

SCALE: 1" = 50'

THIS PLAN ACCURATE FOR TRAFFIC HANDLING WORK ONLY.

TH-2

STATE OF CALIFORNIA - DEPARTMENT OF TRANSPORTATION
Caltrans
DESIGN BRANCH B

FUNCTIONAL SUPERVISOR: LISA ALVISO

CALCULATED-DESIGNED BY: JOLENE MAI
CHECKED BY: LISA ALVISO

REVISED BY
DATE REVISED

LAST REVISION 09-10-09
DATE PLOTTED => 23-DEC-2009
TIME PLOTTED => 05:46

BORDER LAST REVISED 2/1/2008

RELATIVE BORDER SCALE IS IN INCHES 0 1 2 3

USERNAME => trmikesl
DGN FILE => c0k260md002.dgn

CU 12221

EA 0K2601

Dist	COUNTY	ROUTE	POST MILES TOTAL PROJECT	SHEET No.	TOTAL SHEETS
12	Ora	39	3.6	11	45

REGISTERED CIVIL ENGINEER 10-01-09 DATE

12-21-09
PLANS APPROVAL DATE

REGISTERED PROFESSIONAL ENGINEER
LISA ALVISO
No. C46382
Exp. 3-31-11
CIVIL
STATE OF CALIFORNIA

THE STATE OF CALIFORNIA OR ITS OFFICERS OR AGENTS SHALL NOT BE RESPONSIBLE FOR THE ACCURACY OR COMPLETENESS OF SCANNED COPIES OF THIS PLAN SHEET.

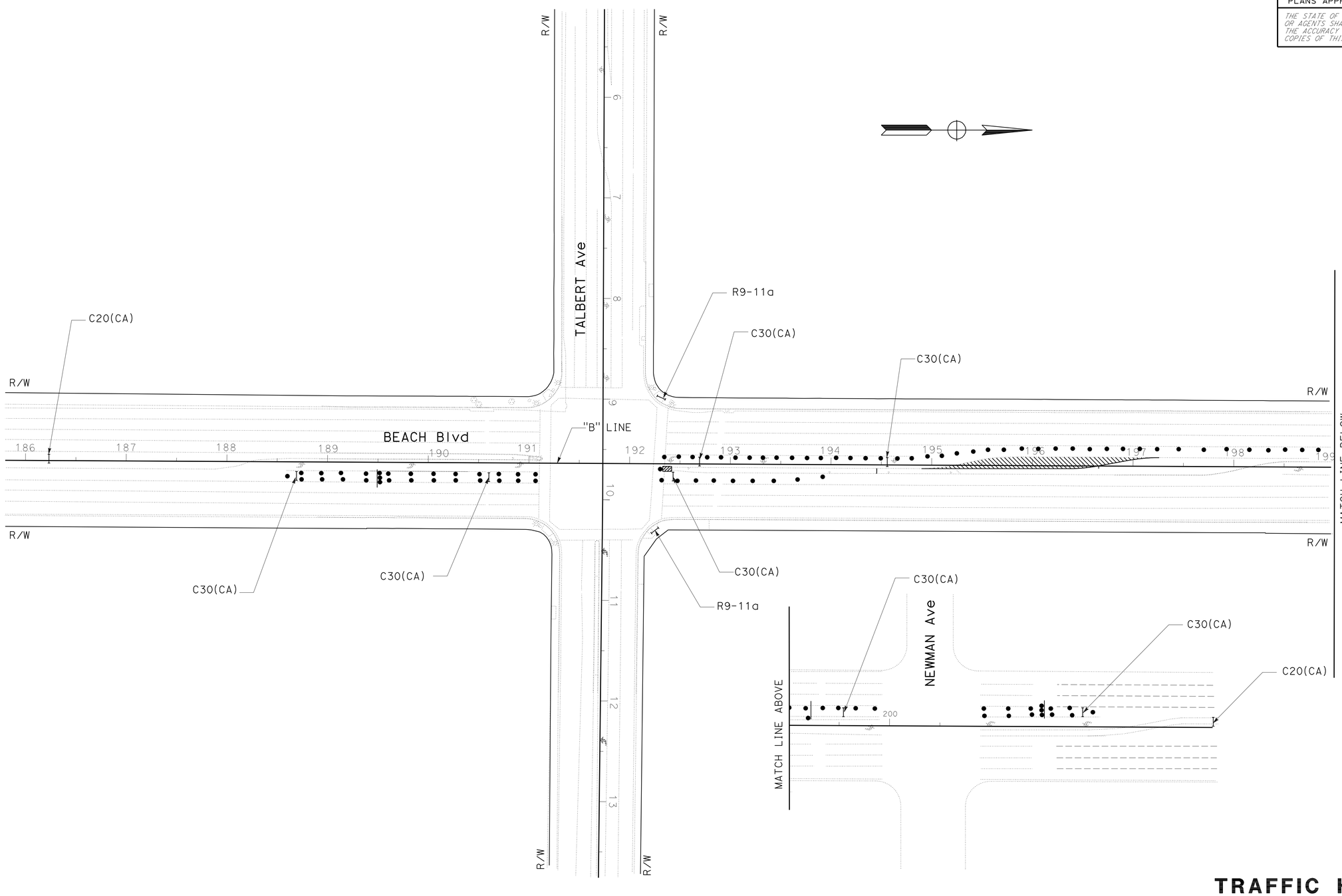

TRAFFIC HANDLING PLAN

SCALE: 1" = 50'

THIS PLAN ACCURATE FOR TRAFFIC HANDLING WORK ONLY.

TH-3

STATE OF CALIFORNIA - DEPARTMENT OF TRANSPORTATION
Caltrans®
DESIGN BRANCH B
FUNCTIONAL SUPERVISOR: LISA ALVISO
CALCULATED-DESIGNED BY: JOLENE MAI
CHECKED BY: LISA ALVISO
REVISED BY
DATE REVISED

LAST REVISION 09-10-09
DATE PLOTTED => 22-DEC-2009
TIME PLOTTED => 13:15

Dist	COUNTY	ROUTE	POST MILES TOTAL PROJECT	SHEET No.	TOTAL SHEETS
12	Ora	39	3.6	12	45

REGISTERED CIVIL ENGINEER 10-01-09 DATE

12-21-09
PLANS APPROVAL DATE

REGISTERED PROFESSIONAL ENGINEER
LISA ALVISO
No. C46382
Exp. 3-31-11
CIVIL
STATE OF CALIFORNIA

THE STATE OF CALIFORNIA OR ITS OFFICERS OR AGENTS SHALL NOT BE RESPONSIBLE FOR THE ACCURACY OR COMPLETENESS OF SCANNED COPIES OF THIS PLAN SHEET.

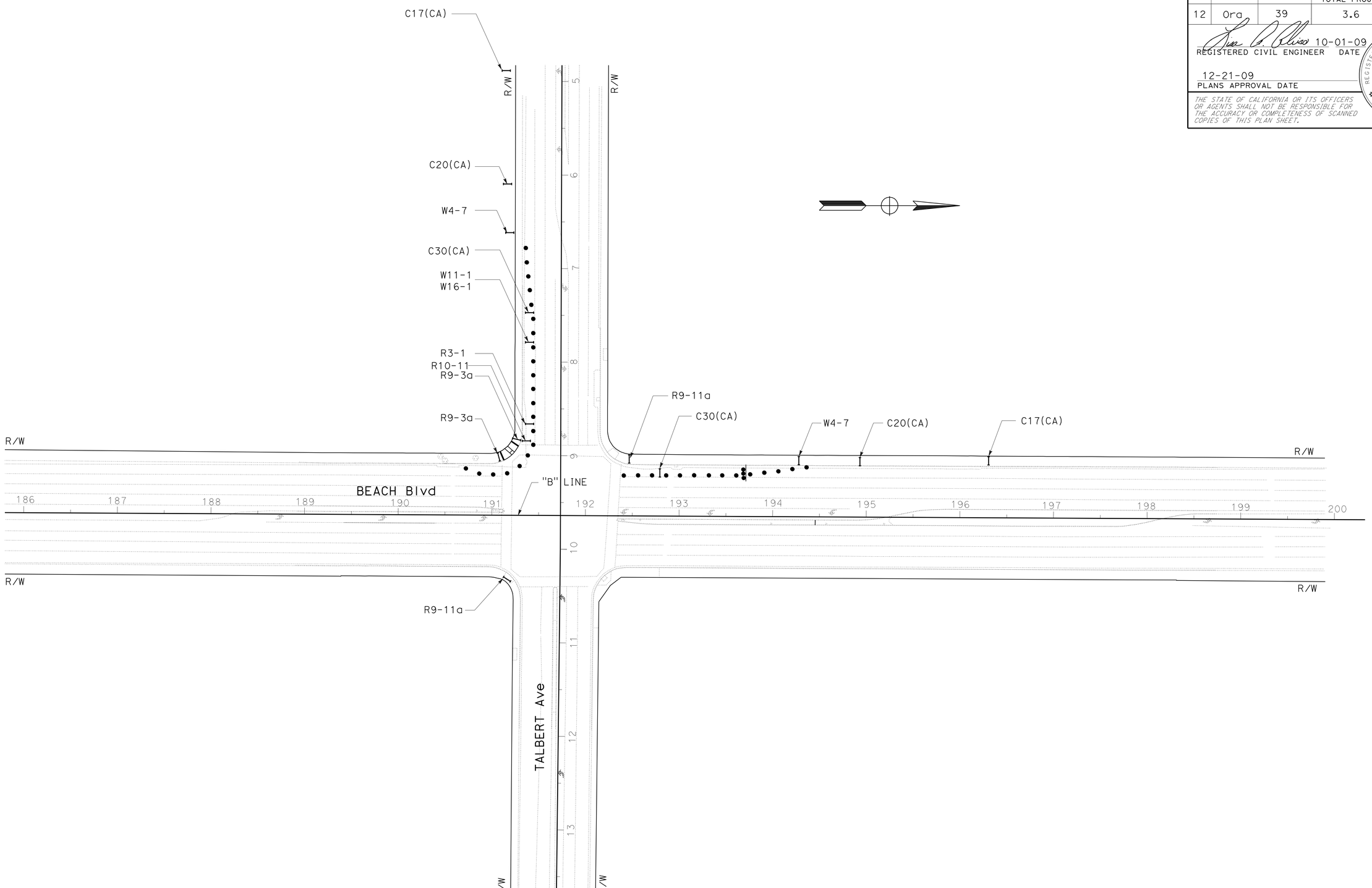

TRAFFIC HANDLING PLAN

SCALE: 1" = 50'

THIS PLAN ACCURATE FOR TRAFFIC HANDLING WORK ONLY.

TH-4

STATE OF CALIFORNIA - DEPARTMENT OF TRANSPORTATION
Caltrans®
DESIGN BRANCH B

FUNCTIONAL SUPERVISOR: LISA ALVISO

CALCULATED-DESIGNED BY: JOLENE MAI
CHECKED BY: LISA ALVISO

REVISED BY | DATE REVISED

LAST REVISION 09-10-09
DATE PLOTTED => 23-DEC-2009
TIME PLOTTED => 05:47

Dist	COUNTY	ROUTE	POST MILES TOTAL PROJECT	SHEET No.	TOTAL SHEETS
12	Ora	39	3.6	13	45

REGISTERED CIVIL ENGINEER 10-01-09 DATE

12-21-09
PLANS APPROVAL DATE

REGISTERED PROFESSIONAL ENGINEER
LISA ALVISO
No. C46382
EXP. 3-31-11
CIVIL
STATE OF CALIFORNIA

THE STATE OF CALIFORNIA OR ITS OFFICERS OR AGENTS SHALL NOT BE RESPONSIBLE FOR THE ACCURACY OR COMPLETENESS OF SCANNED COPIES OF THIS PLAN SHEET.

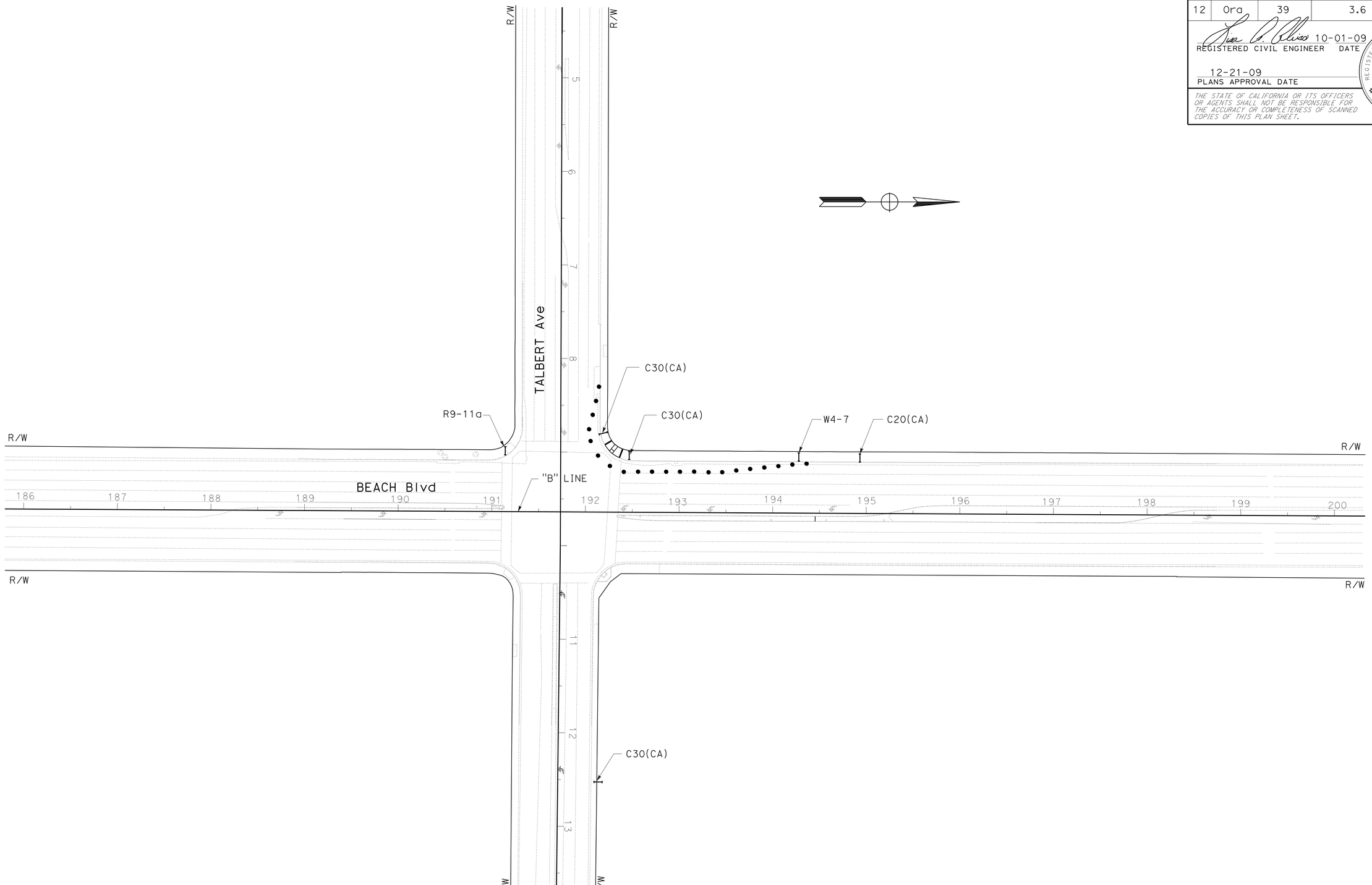

THIS PLAN ACCURATE FOR TRAFFIC HANDLING WORK ONLY

TRAFFIC HANDLING PLAN

SCALE: 1" = 50'

TH-5

STATE OF CALIFORNIA - DEPARTMENT OF TRANSPORTATION
Caltrans
DESIGN BRANCH B

FUNCTIONAL SUPERVISOR: LISA ALVISO

CALCULATED-DESIGNED BY: JOLENE MAI
CHECKED BY: LISA ALVISO

REVISED BY
DATE REVISED

LAST REVISION 09-10-09
DATE PLOTTED => 22-DEC-2009
TIME PLOTTED => 13:15

Dist	COUNTY	ROUTE	POST MILES TOTAL PROJECT	SHEET No.	TOTAL SHEETS
12	Ora	39	3.6	14	45

REGISTERED CIVIL ENGINEER 10-01-09 DATE

12-21-09
PLANS APPROVAL DATE

REGISTERED PROFESSIONAL ENGINEER
LISA ALVISO
No. C46382
Exp. 3-31-11
CIVIL
STATE OF CALIFORNIA

THE STATE OF CALIFORNIA OR ITS OFFICERS OR AGENTS SHALL NOT BE RESPONSIBLE FOR THE ACCURACY OR COMPLETENESS OF SCANNED COPIES OF THIS PLAN SHEET.

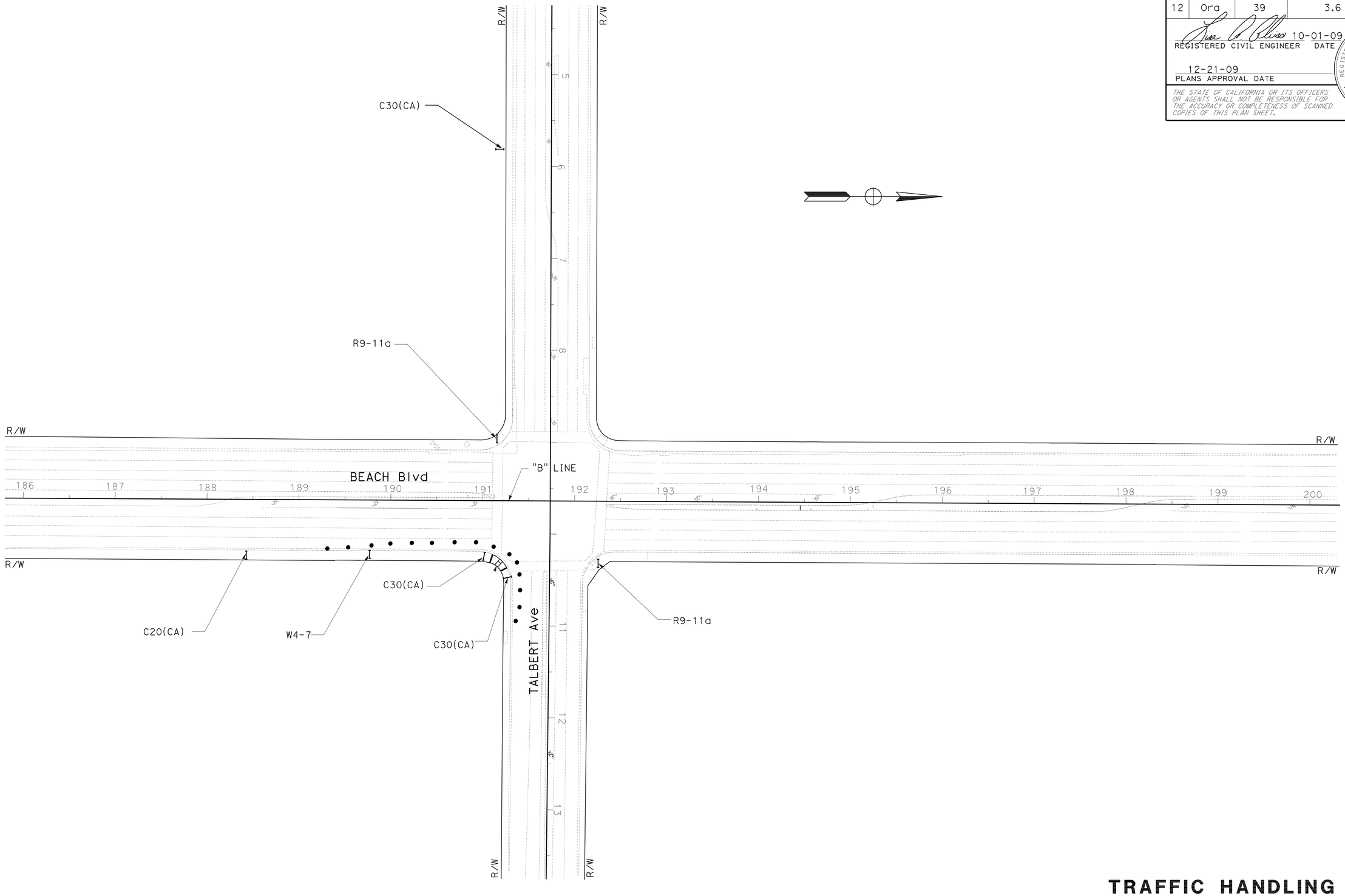

THIS PLAN ACCURATE FOR TRAFFIC HANDLING WORK ONLY

TRAFFIC HANDLING PLAN

SCALE: 1" = 50'

TH-6

STATE OF CALIFORNIA - DEPARTMENT OF TRANSPORTATION
Caltrans
DESIGN BRANCH B

FUNCTIONAL SUPERVISOR: LISA ALVISO
CALCULATED-DESIGNED BY: JOLENE MAI
CHECKED BY: LISA ALVISO
REVISED BY
DATE REVISED

LAST REVISION 09-10-09
DATE PLOTTED => 22-DEC-2009
TIME PLOTTED => 13:16

Dist	COUNTY	ROUTE	POST MILES TOTAL PROJECT	SHEET No.	TOTAL SHEETS
12	Ora	39	3.6	15	45

REGISTERED CIVIL ENGINEER DATE 10-01-09

12-21-09
PLANS APPROVAL DATE

REGISTERED PROFESSIONAL ENGINEER LISA ALVISO No. C46382 Exp. 7-31-11 CIVIL STATE OF CALIFORNIA

THE STATE OF CALIFORNIA OR ITS OFFICERS OR AGENTS SHALL NOT BE RESPONSIBLE FOR THE ACCURACY OR COMPLETENESS OF ELECTRONIC COPIES OF THIS PLAN SHEET.

CONSTRUCTION AREA SIGNS (PORTABLE)

SIGN CODE	SIGN MESSAGE	PANEL SIZE	NUMBER OF SIGNS SHEET No.					
			TH-1	TH-2	TH-3	TH-4	TH-5	TH-6
C17(CA)	ROAD WORK SPEED LIMIT					2		
C20(CA)	RIGHT(or LEFT) LANE CLOSED AHEAD	30" x 30"		1	2	2	1	1
C30(CA)	LANE CLOSED	30" x 30"	6	4	7	2	3	3
R3-1	SYMBOL	24" x 24"				1		
R3-2	SYMBOL	24" x 24"	1	1				
R9-3a	SYMBOL	24" x 24"				2		
R9-11a	SIDEWALK CLOSED (ARROW) CROSS HERE	24" x 12"	2	2	2	2	1	2
R10-11	NO TURN ON RED	24" x 12"				1		
W4-7	THROUGH TRAFFIC MERGE LEFT	30" x 30"				2	1	1
W11-1	BYCICLE WARNING	18" x 18"				1		
W16-1	SHARE THE ROAD PLAQUE	18" x 24"				1		
W20-1	ROAD WORK AHEAD	30" x 30"	1					
W20-5 (Lt)	LEFT LANE CLOSED AHEAD	30" x 30"	1					

TRAFFIC HANDLING QUANTITIES

THQ-1

STATE OF CALIFORNIA - DEPARTMENT OF TRANSPORTATION
Caltrans
DESIGN BRANCH B
FUNCTIONAL SUPERVISOR: LISA ALVISO
CALCULATED-DESIGNED BY: JOLENE MAI
CHECKED BY: LISA ALVISO
REVISED BY
DATE REVISED

LAST REVISION 09-10-09 | DATE PLOTTED => 22-DEC-2009 | TIME PLOTTED => 13:16

Dist	COUNTY	ROUTE	POST MILES TOTAL PROJECT	SHEET No.	TOTAL SHEETS
12	Ora	39	3.6	16	45

Mostafa Aliakbarzadeh 11-09-09
REGISTERED CIVIL ENGINEER DATE

12-21-09
PLANS APPROVAL DATE

REGISTERED PROFESSIONAL ENGINEER
MOSTAFA ALIAKBARZADEH
No. 53003
Exp. 03-31-11
CIVIL
STATE OF CALIFORNIA

THE STATE OF CALIFORNIA OR ITS OFFICERS OR AGENTS SHALL NOT BE RESPONSIBLE FOR THE ACCURACY OR COMPLETENESS OF SCANNED COPIES OF THIS PLAN SHEET.

LEGEND:

(X) PAVEMENT DELINEATION DETAIL

CHANGE IN PAVEMENT DELINEATION

ABBREVIATIONS:

B BIKE
L LANE

NOTES:

1. ALL CONFLICTING TRAFFIC STRIPES AND PAVEMENT MARKINGS SHALL BE REMOVED.
2. ALL TRAFFIC STRIPES AND PAVEMENT MARKINGS SHALL BE PAINT (2-COAT) UNLESS OTHERWISE NOTED.

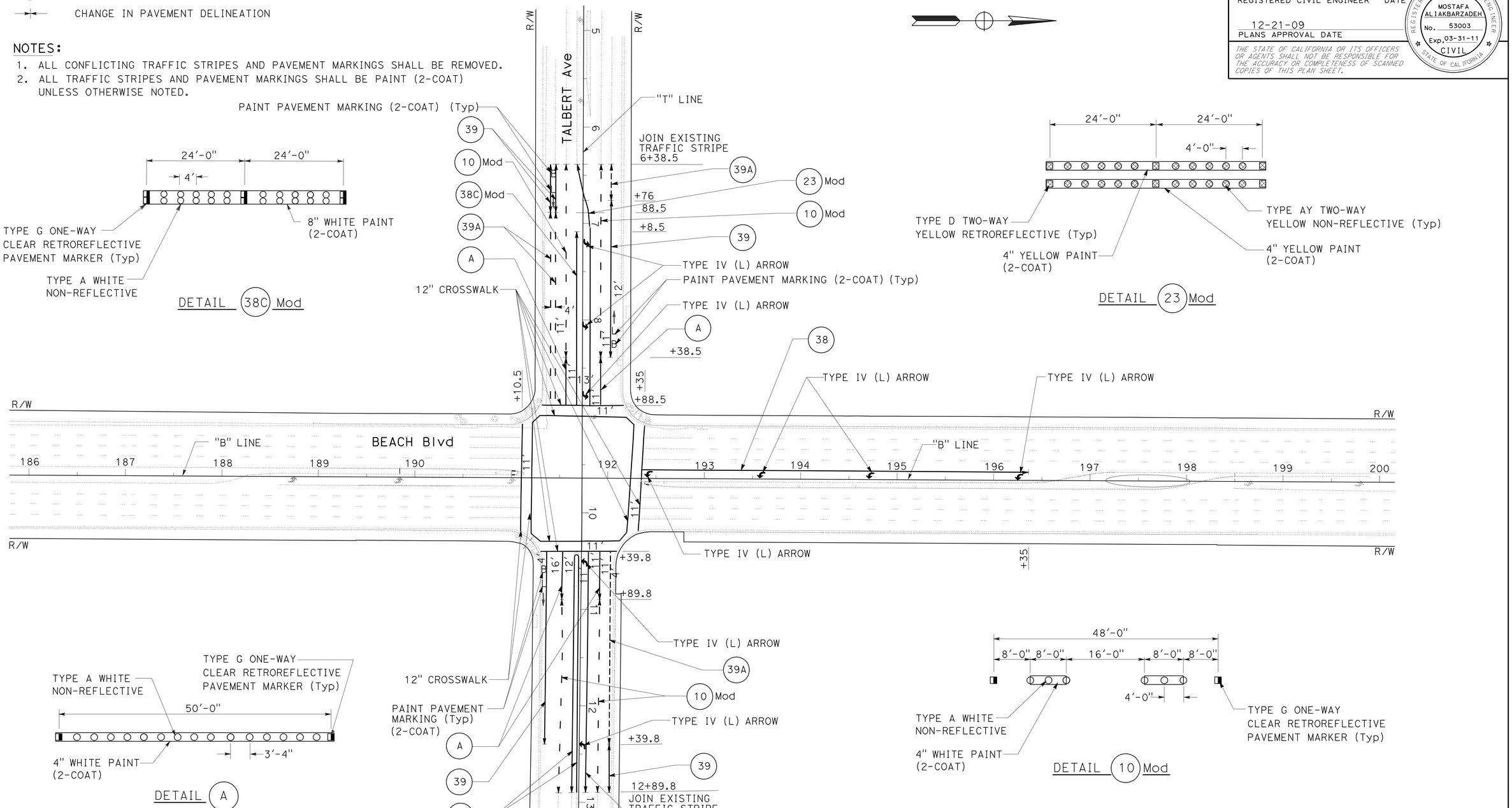

PAVEMENT DELINEATION PLAN

SCALE: 1" = 50'

THIS PLAN ACCURATE FOR PAVEMENT DELINEATION WORK ONLY.

PD-1

STATE OF CALIFORNIA - DEPARTMENT OF TRANSPORTATION
Caltrans® TRAFFIC DESIGN

FUNCTIONAL SUPERVISOR: ADEL MALEK
CALCULATED-DESIGNED BY: RICHARD DANG
CHECKED BY: MOSTAFA ALIAKBARZADEH
REVISED BY
DATE REVISED

LAST REVISION 11-01-09
DATE PLOTTED => 22-DEC-2009
TIME PLOTTED => 13:16

Dist	COUNTY	ROUTE	POST MILES TOTAL PROJECT	SHEET No.	TOTAL SHEETS
12	Ora	39	3.6	17	45

Mostafa Aliakbarzadeh 11-09-09
REGISTERED CIVIL ENGINEER DATE

12-21-09
PLANS APPROVAL DATE 03-31-11

REGISTERED PROFESSIONAL ENGINEER
MOSTAFA ALIAKBARZADEH
No. 53003
Exp. 03-31-11
CIVIL
STATE OF CALIFORNIA

THE STATE OF CALIFORNIA OR ITS OFFICERS OR AGENTS SHALL NOT BE RESPONSIBLE FOR THE ACCURACY OR COMPLETENESS OF SCANNED COPIES OF THIS PLAN SHEET.

PAVEMENT DELINEATION QUANTITIES

SHEET No.	LOCATION	PAINT TRAFFIC STRIPE (2-COAT)							PAINT PAVEMENT MARKING (2-COAT)			PAVEMENT MARKER					REMOVE			
												NON-REFLECTIVE		RETROREFLECTIVE						
		DETAIL 26 (N)	DETAIL A 4" SOLID WHITE	DETAIL 23 Mod 4" SOLID YELLOW	DETAIL 10 Mod 4" WHITE BROKEN (16-8)	DETAIL 38C Mod 8" SOLID WHITE	DETAIL 39 6" SOLID WHITE	DETAIL 39A 6" BROKEN WHITE (8-4)	SYMBOLS (ARROW)	SYMBOLS (WORD)	12" SOLID WHITE CROSSWALK	TYPE A WHITE	TYPE AY YELLOW	TYPE D	TYPE G	TYPE H	YELLOW PAINTED TRAFFIC STRIPE	PAINTED TRAFFIC STRIPE (WHITE)	PAVEMENT MARKER	PAINTED PAVEMENT MARKING
		LF	LF						SQFT			EA		EA			LF	LF	EA	SQFT
PD-1	TALBERT Ave - "T" LINE	500	200	250	800	430	612	237.5	75	135	910	347	110	26	63	12	250	2279.50	558	1120
	BEACH Blvd - "B" LINE					400			45			170			36				206	45
SUB-TOTAL			200	250	800	830	612	237.5	120	135	910	517	110	26	99	12	250	2279.50	764	1165
TOTAL			2929.5						1165			627		137			250	2279.50	764	1165

(N) - NOT A SEPARATE PAY ITEM, FOR INFORMATION ONLY.

STATE OF CALIFORNIA - DEPARTMENT OF TRANSPORTATION
Caltrans® TRAFFIC DESIGN

FUNCTIONAL SUPERVISOR: ADEL MALEK
CALCULATED-DESIGNED BY / CHECKED BY: MOSTAFA ALIAKBARZADEH
RICHARD DANG
REVISED BY / DATE REVISED

PAVEMENT DELINEATION QUANTITIES

PDQ-1

LAST REVISION 11-01-09
DATE PLOTTED => 22-DEC-2009
TIME PLOTTED => 13:16

Dist	COUNTY	ROUTE	POST MILES TOTAL PROJECT	SHEET No.	TOTAL SHEETS
12	Ora	39	3.6	18	45

Mostafa Aliakbarzadeh 10-01-09
REGISTERED CIVIL ENGINEER DATE

12-21-09
PLANS APPROVAL DATE

REGISTERED PROFESSIONAL ENGINEER
MOSTAFA ALIAKBARZADEH
No. 53003
Exp. 03-31-11
CIVIL
STATE OF CALIFORNIA

THE STATE OF CALIFORNIA OR ITS OFFICERS OR AGENTS SHALL NOT BE RESPONSIBLE FOR THE ACCURACY OR COMPLETENESS OF SCANNED COPIES OF THIS PLAN SHEET.

NOTE:

1. EXACT LOCATION AND POSITION OF SIGN WILL BE DETERMINED BY THE ENGINEER.

LEGEND:

[No.] SIGN IDENTIFICATION NUMBER

ABBREVIATIONS:

IS ROADSIDE SIGN
RM REMOVE ROADSIDE SIGN
RP REMAIN IN PLACE
RL RELOCATE

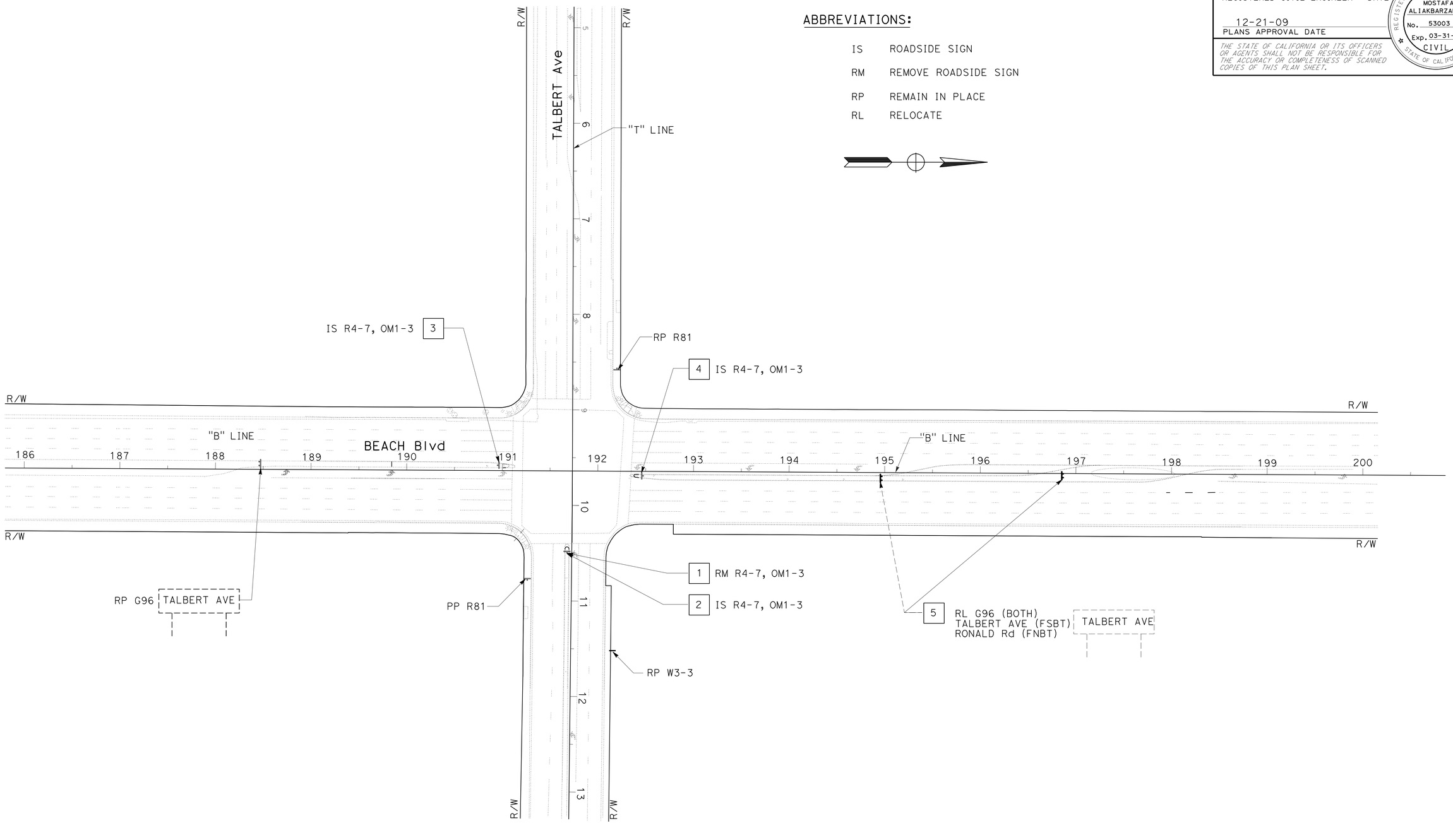

THIS PLAN ACCURATE FOR SIGN WORK ONLY.

SIGN PLAN

SCALE: 1" = 50'

S-1

STATE OF CALIFORNIA - DEPARTMENT OF TRANSPORTATION
TRAFFIC DESIGN
Caltrans
FUNCTIONAL SUPERVISOR: ADEL MALEK
CALCULATED-DESIGNED BY: RICHARD DANG
CHECKED BY: MOSTAFA ALIAKBARZADEH
REVISED BY
DATE REVISED

LAST REVISION 10-01-09
DATE PLOTTED => 22-DEC-2009
TIME PLOTTED => 13:16

Dist	COUNTY	ROUTE	POST MILES TOTAL PROJECT	SHEET No.	TOTAL SHEETS
12	Ora	39	3.6	19	45

REGISTERED CIVIL ENGINEER DATE 10-01-09

12-21-09
PLANS APPROVAL DATE

REGISTERED PROFESSIONAL ENGINEER MOSTAFA ALIAKBARZADEH No. 53003 Exp. 03-31-11 CIVIL STATE OF CALIFORNIA

THE STATE OF CALIFORNIA OR ITS OFFICERS OR AGENTS SHALL NOT BE RESPONSIBLE FOR THE ACCURACY OR COMPLETENESS OF SCANNED COPIES OF THIS PLAN SHEET.

ROADSIDE SIGNS

SHEET No.	SIGN No.	CODE	PANEL SIZE L x D	POST SIZE & LENGTH 4" x 4"	REMOVE ROADSIDE SIGN	ROADSIDE SIGN (ONE POST)	RELOCATE ROADSIDE SIGN
				LF	EA	EA	EA
S-1	1	R4-7, OM1-3	EXISTING		1		
	2	R4-7	24" x 30"	8.5		1	
		OM1-3	18" x 18"				
	3	R4-7	24" x 30"	8.5		1	
		OM1-3	18" x 18"				
	4	R4-7	24" x 30"	8.5		1	
		OM1-3	18" x 18"				
	5		EXISTING				1
TOTAL					1	3	1

MATERIAL SUMMARY-ROADSIDE SIGNS

SHEET No.	SIGN No.	SIGN CODE	SIGN SIZE L x D	SIGN AREA SQFT	SINGLE FACED	BACKGROUND		LEGEND		GRAFFITI FILM	ROADSIDE SINGLE-SHEET UNFRAMED ALUMINUM
						SHEETING COLOR	RETROREFLECTIVE ASTM TYPE	SHEETING COLOR	RETROREFLECTIVE ASTM TYPE	STANDARD	0.063 INCHES
S-1	2	R4-7	24" x 30"	5	X	WHITE	VII	BLACK	VII	X	5
		OM1-3	18" x 18"	2.25	X	YELLOW	VII	NONE	VII	X	2.25
	3	R4-7	24" x 30"	5	X	WHITE	VII	BLACK	VII	X	5
		OM1-3	18" x 18"	2.25	X	YELLOW	VII	NONE	VII	X	2.25
	4	R4-7	24" x 30"	5	X	WHITE	VII	BLACK	VII	X	5
		OM1-3	18" x 18"	2.25	X	YELLOW	VII	NONE	VII	X	2.25
E-1		R73-2(CA)	36" x 36"	9	X	WHITE	VII	BLACK	VII	X	9
		R73-2(CA)	36" x 36"	9	X	WHITE	VII	BLACK	VII	X	9
TOTAL (SQFT)											39.75

NOTE: CALIFORNIA SIGN CODES ARE DESIGNATED BY (CA).
OTHERWISE, FEDERAL SIGN CODES ARE SHOWN

SIGN QUANTITIES

SQ-1

STATE OF CALIFORNIA - DEPARTMENT OF TRANSPORTATION
Caltrans
TRAFFIC DESIGN

FUNCTIONAL SUPERVISOR: ADEL MALEK
CALCULATED-DESIGNED BY: RICHARD DANG
CHECKED BY: MOSTAFA ALIAKBARZADEH
REVISED BY
DATE REVISED

LAST REVISION 10-01-09
DATE PLOTTED => 22-DEC-2009
TIME PLOTTED => 13:16

Dist	COUNTY	ROUTE	POST MILES TOTAL PROJECT	SHEET No.	TOTAL SHEETS
12	Ora	39	3.6	20	45

REGISTERED CIVIL ENGINEER 10-01-09 DATE

12-21-09
PLANS APPROVAL DATE

REGISTERED PROFESSIONAL ENGINEER LISA ALVISO No. C46382 Exp. 3-31-11 CIVIL STATE OF CALIFORNIA

THE STATE OF CALIFORNIA OR ITS OFFICERS OR AGENTS SHALL NOT BE RESPONSIBLE FOR THE ACCURACY OR COMPLETENESS OF SCANNED COPIES OF THIS PLAN SHEET.

ROADWAY QUANTITIES

SHEET No.	STATION LIMIT	REMOVE CONCRETE CURB	REMOVE CONCRETE	REMOVE CONCRETE ISLAND (PORTION)	ROADWAY EXCAVATION	TEMPORARY DRAINAGE INLET PROTECTION	MINOR CONCRETE (Misc Const) CURB (TYPE A1)	MINOR CONCRETE (Misc Const) CURB (TYPE B1)	MINOR CONCRETE (Misc Const) CURB RAMP	MINOR CONCRETE (STAMPED CONCRETE)	CLASS 2 - AGGREGATE SUBBASE	HOT MIX ASPHALT (TYPE A)	OVERLAY 0.2' RUBBERIZED ASPHALT CONCRETE (TYPE G)	COLD PLANE ASPHALT CONCRETE PAVEMENT (0.20' Max)	TACK COAT
		LF	CY	CY	CY	EA	CY			SQFT	CY	TON	TON	SQYD	TON
L1, C1, C2	"B" 192+32.61 TO 192+42.84 SR 39 NORTH MEDIAN ISLAND	22		0.5	3.0			0.4		16	0.7	4.1	0.6		0.1
L1, C1, C2	"B" 191+00.72 TO 191+14.91 SR 39 SOUTH MEDIAN ISLAND	30		0.9	4.6			0.5		21	1.1	6.2	0.9		0.1
L1, C1, C2	"B" 191+64.93 TO 191+71.29 TALBERT AVE. EAST MEDIAN ISLAND	20		1.4	3.0		0.4			21	0.7	3.9	0.6		0.1
L1, C3	"B" 194+89.97 TO 197+35.00 SR 39 SOUTHBOUND LEFT TURN MEDIAN	240		35	128			7.0		2038	31	170	26		0.7
L1, C1	"B" 192+27.84 NORTH WEST CORNER (CR1)		3.6		1	2			3.6						
L1, C1	"B" 191+21.99 SOUTHWEST CORNER (CR2)		3.7		1	1			3.7						
L1, C1	"B" 191+20.16 SOUTHEAST CORNER (CR 3)		3.4		1	1			3.4						
L1, X1	"T" 6+78.40 TO 6+88.40 "T" 8+38.68 TO 8+88.68 WEST TALBERT Ave											42.3		313.3	0.5
L1, X1	"T" 10+39.78 TO 10+89.78 "T" 12+39.80 TO 12+49.80 EAST TALBERT Ave											32.4		240	0.5
	SUBTOTAL	312	10.7	37.8	141.6	4	0.4	7.9	10.7	2096	33.5	258.9	28.1	553.3	2.0
	TOTAL	312	10.7	37.8	141.6	4	19			2096	33.5	258.9	28.1	553.3	2.0

SUMMARY OF QUANTITIES

Q-1

STATE OF CALIFORNIA - DEPARTMENT OF TRANSPORTATION
Caltrans
DESIGN BRANCH B
FUNCTIONAL SUPERVISOR: LISA ALVISO
CALCULATED-DESIGNED BY: JOLENE MAI
CHECKED BY: LISA ALVISO
REVISED BY
DATE REVISED

LAST REVISION 9-21-09
DATE PLOTTED => 22-DEC-2009
TIME PLOTTED => 13:16

Dist	COUNTY	ROUTE	POST MILES TOTAL PROJECT	SHEET No.	TOTAL SHEETS
12	Ora	39	3.6	21	45

Ronald Wong 10-01-09
LICENSED LANDSCAPE ARCHITECT

12-21-09
PLANS APPROVAL DATE

LICENSED LANDSCAPE ARCHITECT
RONALD WONG NO. 1555
Ronald Wong
Signature
1-31-10
Renewal Date
10-01-09
Date
STATE OF CALIFORNIA

THE STATE OF CALIFORNIA OR ITS OFFICERS OR AGENTS SHALL NOT BE RESPONSIBLE FOR THE ACCURACY OR COMPLETENESS OF SCANNED COPIES OF THIS PLAN SHEET.

NOTE: FOR ACCURATE RIGHT OF WAY DATA, CONTACT RIGHT OF WAY RECORD ENGINEERING AT THE DISTRICT OFFICE.

PLANT LIST AND PLANTING SPECIFICATIONS

PLANT GROUP	PLANT No.	SYMBOL	BOTANICAL NAME	COMMON NAME	SIZE	QUANTITY EACH	HOLE SIZE (INCH) Dia	HOLE SIZE (INCH) DEPTH	BASIN TYPE	IRON SULFATE (1)	SOIL AMEND (1)	COMMERCIAL FERTILIZER (1) PLANTING	COMMERCIAL FERTILIZER (1) PLT ESTB	BASIN MULCH	STAKING	PLANTING LIMITS MINIMUM DISTANCE (Ft) FROM TRVD WAY	PVMT	FENCE	WALL	PAVED DITCH	EARTH DITCH	ON CENTER (Ft)	REMARKS
A	1		LAVANDULA DENTATA	FRENCH LAVENDER	No. 1	26	12	9	-	-	0.40 CF	4.0 OZ (9)	2.0 OZ (9)	-	-	-	-	-	-	-	-	2.0	SHRUB
	2		ALOE STRIATA	CORAL ALOE	No. 1	28	12	9	-	-	0.40 CF	4.0 OZ (9)	2.0 OZ (9)	-	-	-	-	-	-	-	-	2.0	SHRUB
B	3		PITTOSPORUM CRASSIFOLIUM 'COMPACTUM'	DWARF PITTOSPORUM	No. 5	4	16	12	-	-	0.40 CF	4.0 OZ (9)	2.0 OZ (9)	-	-	-	-	-	-	-	-	(4)	SHRUB
I	4		GAZANIAS SPLENDENS	YELLOW FLOWER GAZANIA	4" POT	870	6	6	-	-	-	5.0 LB/1000SF (9)	-	-	-	-	-	-	-	-	-	1.0	GROUND COVER
	5		SENECIO MANDRALISCAE	BLUE PICKLE	4" POT	270	6	6	-	-	-	5.0 LB/1000SF (9)	-	-	-	-	-	-	-	-	-	1.0	GROUND COVER

APPLICABLE WHEN CIRCLED:

(1) - Quantities shown are "per plant" unless shown as SQFT or SQYD application rates.
2 - Sufficient to receive root ball.
3 - Does not apply to mulch areas.
(4) - As shown on plans.
5 - Unless otherwise shown on plans.
6 - See detail.
7 - See Special Provisions.
8 - Double rows, triangular spaced.
(9) - Slow release fertilizer
10 - Packet fertilizer

LEGEND

MULCH

REMOVE EXISTING SHRUBS AND GROUNDCOVER

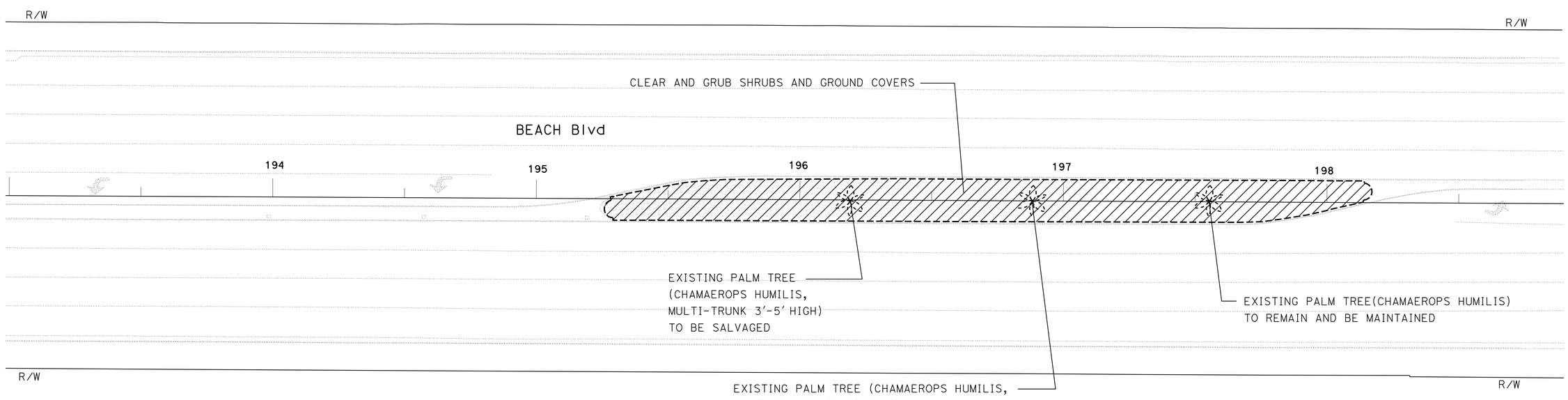

THIS PLAN ACCURATE FOR PLANT REMOVAL WORK ONLY

PLANTING LIST AND PLANT REMOVAL PLAN

SCALE: 1" = 20'

PL-1

STATE OF CALIFORNIA - DEPARTMENT OF TRANSPORTATION
LANDSCAPE ARCHITECTURE
SENIOR LANDSCAPE ARCHITECT: ERIC DICKSON
CALCULATED-DESIGNED BY: STEPHEN SU
CHECKED BY: RONLAD WONG
REVISED BY
DATE REVISED

LAST REVISION 02-04-09
DATE PLOTTED => 07-JAN-2010
TIME PLOTTED => 05:38

NOTE: FOR ACCURATE RIGHT OF WAY DATA, CONTACT RIGHT OF WAY RECORD ENGINEERING AT THE DISTRICT OFFICE.

Dist	COUNTY	ROUTE	POST MILES TOTAL PROJECT	SHEET No.	TOTAL SHEETS
12	Ora	39	3.6	22	45

Ronald Wong 10-01-09
LICENSED LANDSCAPE ARCHITECT

12-21-09
PLANS APPROVAL DATE

LICENSED LANDSCAPE ARCHITECT — RONALD WONG No. 1524 — 10-01-09 — Signature — Renewal Date 1-31-10 — Date 10-01-09 — STATE OF CALIFORNIA

THE STATE OF CALIFORNIA OR ITS OFFICERS OR AGENTS SHALL NOT BE RESPONSIBLE FOR THE ACCURACY OR COMPLETENESS OF SCANNED COPIES OF THIS PLAN SHEET.

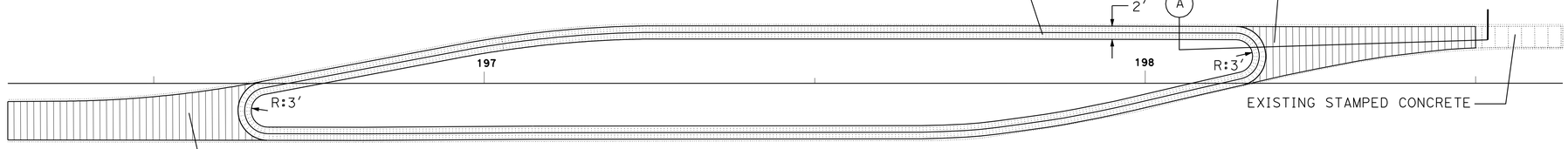

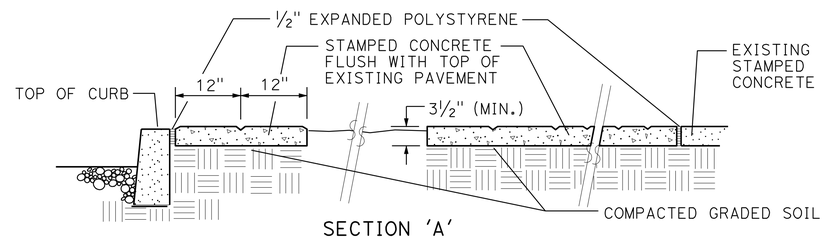

STAMPED CONCRETE LAYOUT DETAIL
SCALE: 1" = 10′

SECTION 'A'
NO SCALE

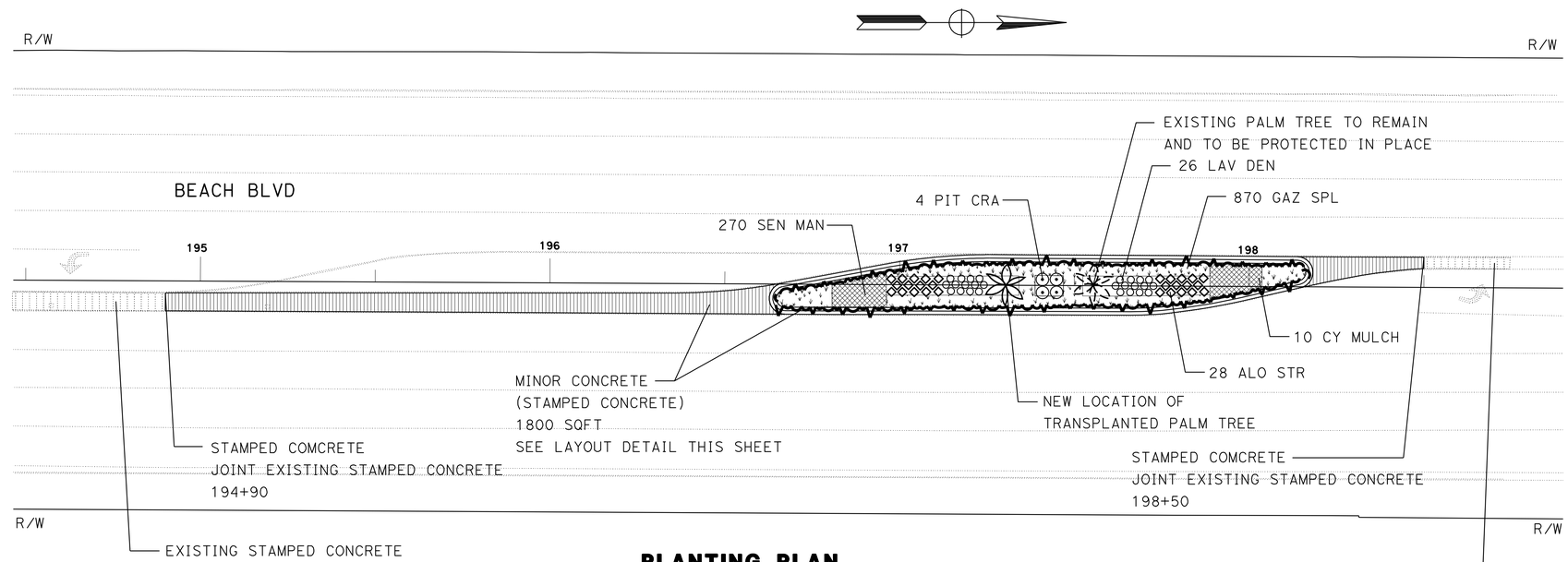

PLANTING PLAN
SCALE: 1" = 20′

THIS PLAN ACCURATE FOR PLANTING WORK ONLY.

STAMPED CONCRETE AND PLANTING PLAN

PP-1

STATE OF CALIFORNIA - DEPARTMENT OF TRANSPORTATION
Caltrans® LANDSCAPE ARCHITECTURE

SENIOR LANDSCAPE ARCHITECT: ERIC DICKSON
CALCULATED-DESIGNED BY / CHECKED BY
STEPHEN SU / RONLAD WONG
REVISED BY / DATE REVISED

LAST REVISION 02-04-09
DATE PLOTTED => 06-JAN-2010
TIME PLOTTED => 14:03

NOTE: FOR ACCURATE RIGHT OF WAY DATA, CONTACT RIGHT OF WAY RECORD ENGINEERING AT THE DISTRICT OFFICE.

Dist	COUNTY	ROUTE	POST MILES TOTAL PROJECT	SHEET No.	TOTAL SHEETS
12	Ora	39	3.6	23	45

Ronald Wong 10-01-09
LICENSED LANDSCAPE ARCHITECT

12-21-09
PLANS APPROVAL DATE

LICENSED LANDSCAPE ARCHITECT — RONALD WONG NO. 1524 — Signature — Renewal Date 1-31-10 — Date 10-01-09 — STATE OF CALIFORNIA

THE STATE OF CALIFORNIA OR ITS OFFICERS OR AGENTS SHALL NOT BE RESPONSIBLE FOR THE ACCURACY OR COMPLETENESS OF SCANNED COPIES OF THIS PLAN SHEET.

SPRINKLER SCHEDULE

SYMBOL	TYPE	MANUFACTURER	MODEL	DESCRIPTION	SPRAY PATTERN	OPERATING PRESSURE (PSI)	PRESSURE COMPENSATING	PLUS/MINUS 5% DISCHARGE GALLONS PER MINUTE (GPM)	GALLONS PER HOUR (GPH)	RADIUS (Ft)	WIDTH x LENGTH (Ft)	MATERIAL	INLET CONNECTION (NPT INCH)	POSITIVE-LOCKING ADJ ARC STOP	BACKSPLASH PREVENTER	DIFFUSER PIN	DISTANCE CONTROL FLAP	ADJ DISCHARGE	SWING JOINT (TYPE) ⑤	RISER SUPPORT	SPRINKLER PROTECTOR (TYPE)	REMARKS
△	B	RAINBIRD	1800 SAM	12" POP-UP SHRUB SPRAY	H	30	-	1.3	-	12	-	PL	-	-	-	-	-	-	II	-	-	
△	B	RAINBIRD	1800 SAM	12" POP-UP SHRUB SPRAY	H	30	-	0.79	-	10	-	PL	-	-	-	-	-	-	II	-	-	
▲	B	RAINBIRD	1800 SAM	12" POP-UP SHRUB SPRAY	H	30	-	0.52	-	8	-	PL	-	-	-	-	-	-	II	-	-	
●	B	RAINBIRD	1800 SAM	12" POP-UP SHRUB SPRAY	H/Q	30	-	0.20/ 0.1	-	5	-	PL	-	-	-	-	-	-	II	-	-	
□		GRISWOLD	2000 SERIES	1" RCV								B/B										
▨		FEBCO	825Y	1" BPA								B/B										
⬡		RAINBIRD	33-DNP	QUICK COUPLING VALVE								B/B										
⊠		DIG	LEIT 4004 ENCL 4000	IRRIGATION CONTROLLER (SOLAR) CONTROLLER ENCLOSURE CABINET																		

ABBREVIATIONS

F	full circle	Ft	feet/foot
P	part circle	GPM	gallons per minute
F/P	full/part circle	GPH	gallons per hour
Q	quarter circle	Adj	adjustable
T	third circle	PL	plastic
H	half circle	B/B	brass/bronze
TT	two third circle	B/PL	brass/plastic
TQ	three quarter circle	B/B/PL	brass/bronze/plastic
CST	center strip	NPT	national pipe thread
SST	side strip	IPS	iron pipe size
EST	end strip	PSI	pounds per square inch

APPLICABLE WHEN CIRCLED BELOW:

1 - See Special Provisions.
2 - If a pressure compensating device is specified, the discharge and radii shown reflect its use.
3 - Arc Stop shall be fitted with a nut and bolt.
4 - Vinyl-coated cast iron housing.
⑤ - Swing Joints required adjacent to shoulders, curbs, sidewalks, and dikes.
6 - Unless otherwise shown on plans.

X IN BOX DENOTES REQUIREMENT

NOTE: REMOVE ALL OF EXISTING IRRIGATION EQUIPMENTS IN THE MEDIAN ISLAND INCLUDING SPRINKLER HEADS, PLASTIC PIPE, VALVES, VALVE BOXES, BPA, IRRIGATION CONTROLLER AND CABINET.

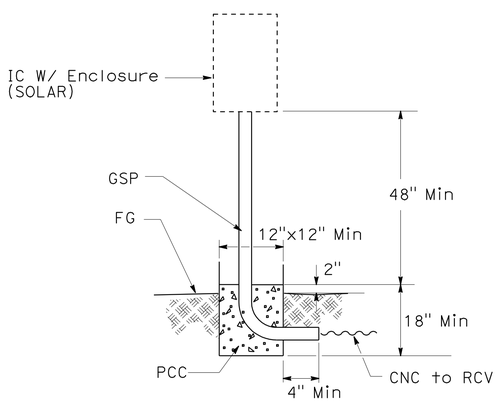

IRRIGATION CONTROLLER (SOLAR)

SECTION

NO SCALE

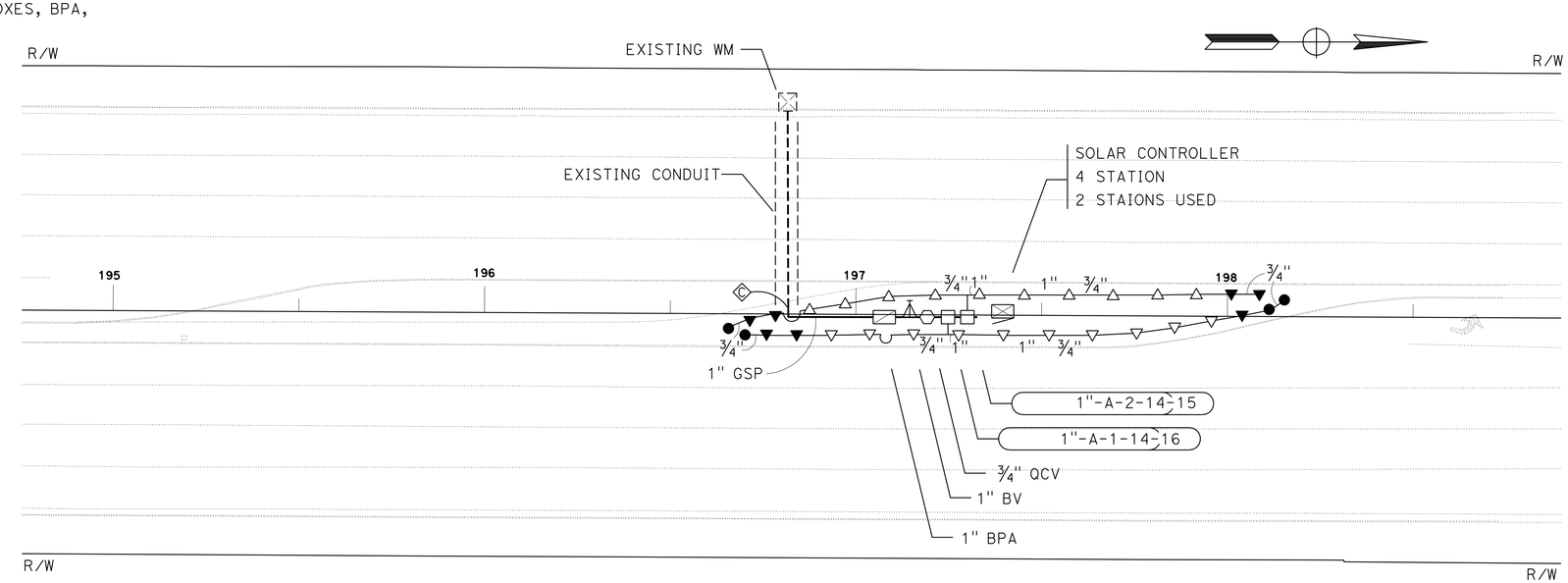

THIS PLAN ACCURATE FOR IRRIGATION WORK ONLY

IRRIGATION PLAN

SCALE: 1" = 20'

IP-1

STATE OF CALIFORNIA - DEPARTMENT OF TRANSPORTATION
Caltrans LANDSCAPE ARCHITECTURE

SENIOR LANDSCAPE ARCHITECT: ERIC DICKSON
CALCULATED-DESIGNED BY: STEPHEN SU
CHECKED BY: RONLAD WONG
REVISED BY / DATE REVISED

LAST REVISION 02-04-09
DATE PLOTTED => 06-JAN-2010
TIME PLOTTED => 14:03

Dist	COUNTY	ROUTE	POST MILES TOTAL PROJECT	SHEET No.	TOTAL SHEETS
12	Ora	39	3.6	24	45

Mansour Feiz 10-01-09
REGISTERED ELECTRICAL ENGINEER DATE

12-21-09
PLANS APPROVAL DATE

REGISTERED PROFESSIONAL ENGINEER M.FEIZ No. E015688 Exp. 06/30/10 ELECT. STATE OF CALIFORNIA

THE STATE OF CALIFORNIA OR ITS OFFICERS OR AGENTS SHALL NOT BE RESPONSIBLE FOR THE ACCURACY OR COMPLETENESS OF SCANNED COPIES OF THIS PLAN SHEET.

NOTE: FOR ACCURATE RIGHT OF WAY DATA, CONTACT RIGHT OF WAY ENGINEERING AT THE DISTRICT OFFICE.

EXISTING CONDUCTOR AND CONDUIT SCHEDULE

CONDUCTOR	CONDUCTOR RUN	1	2	3	4	5	6	7	8	9
12CSC	VEHICULAR SIGNAL	8	4	3	2	2	1	2	2	1
3CSC	ppb	8	5	4	3	2	1	3	2	1
EVC*	evd	4	2	1	1	1	-	1	1	1
#14	pec	2	-	-	-	-	-	-	-	-
#12	iisns	2	2	2	2	2	-	2	2	2
#10	LUMINAIRE	2	2	2	2	2	-	2	2	2
#8	SERVICE	2	-	-	-	-	-	-	-	-
dlc	Ø1	1	-	-	-	-	-	1	-	-
	Ø2	4	4	4	4	-	-	-	-	-
	Ø3	1	-	-	-	-	-	-	-	-
	Ø4	4	4	4	4	4	4	-	-	-
	Ø5	1	1	1	1	-	-	-	-	-
	Ø6	4	-	-	-	-	-	4	-	-
	Ø7	2	1	1	1	1	1	1	1	1
	Ø8	4	-	-	-	-	-	-	-	-
	TOTAL dlc	21	10	10	10	5	5	6	1	1
	CONDUIT SIZE	2-3"	2½"	2½"	2½"	2½"	2½"	2½"	2½"	2½"

* =OPTICAL CABLE TYPE 3M MODEL M-138
evc TO BE REUSED

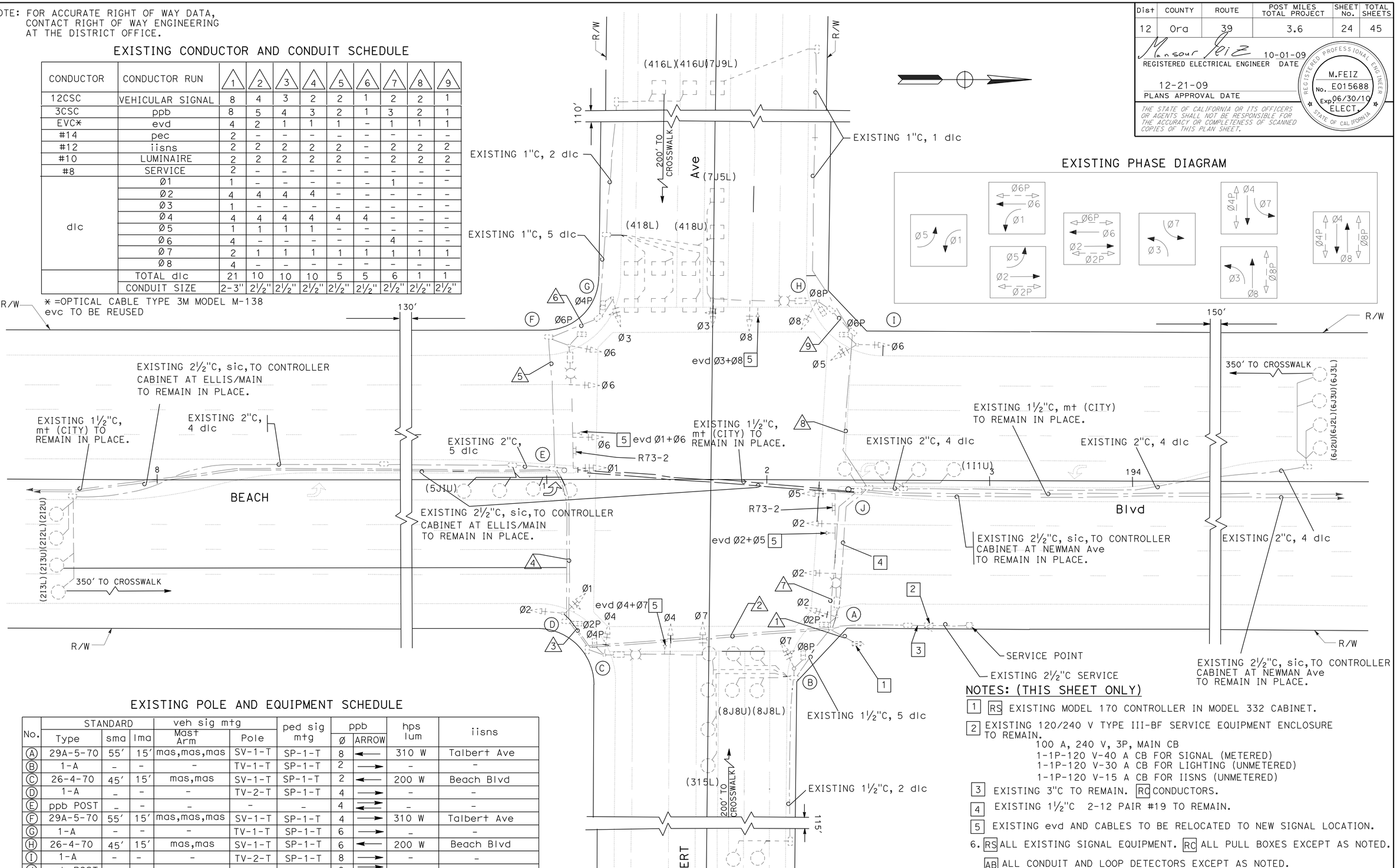

EXISTING PHASE DIAGRAM

EXISTING POLE AND EQUIPMENT SCHEDULE

No.	STANDARD Type	STANDARD sma	STANDARD lma	veh sig mtg Mast Arm	veh sig mtg Pole	ped sig mtg	ppb Ø	ppb ARROW	hps lum	iisns
A	29A-5-70	55'	15'	mas,mas,mas	SV-1-T	SP-1-T	8	←	310 W	Talbert Ave
B	1-A	-	-	-	TV-1-T	SP-1-T	2	→	-	-
C	26-4-70	45'	15'	mas,mas	SV-1-T	SP-1-T	2	←	200 W	Beach Blvd
D	1-A	-	-	-	TV-2-T	SP-1-T	4	→	-	-
E	ppb POST	-	-	-	-	-	4	⇄	-	-
F	29A-5-70	55'	15'	mas,mas,mas	SV-1-T	SP-1-T	4	→	310 W	Talbert Ave
G	1-A	-	-	-	TV-1-T	SP-1-T	6	→	-	-
H	26-4-70	45'	15'	mas,mas	SV-1-T	SP-1-T	6	←	200 W	Beach Blvd
I	1-A	-	-	-	TV-2-T	SP-1-T	8	→	-	-
J	ppb POST	-	-	-	-	-	8	⇄	-	-

NOTES: (THIS SHEET ONLY)

1. RS EXISTING MODEL 170 CONTROLLER IN MODEL 332 CABINET.
2. EXISTING 120/240 V TYPE III-BF SERVICE EQUIPMENT ENCLOSURE TO REMAIN.
   100 A, 240 V, 3P, MAIN CB
   1-1P-120 V-40 A CB FOR SIGNAL (METERED)
   1-1P-120 V-30 A CB FOR LIGHTING (UNMETERED)
   1-1P-120 V-15 A CB FOR IISNS (UNMETERED)
3. EXISTING 3"C TO REMAIN. RC CONDUCTORS.
4. EXISTING 1½"C 2-12 PAIR #19 TO REMAIN.
5. EXISTING evd AND CABLES TO BE RELOCATED TO NEW SIGNAL LOCATION.
6. RS ALL EXISTING SIGNAL EQUIPMENT. RC ALL PULL BOXES EXCEPT AS NOTED.
   AB ALL CONDUIT AND LOOP DETECTORS EXCEPT AS NOTED.

SIGNAL AND LIGHTING (REMOVE)

SCALE: 1" = 20'

E-1

THIS PLAN IS ACCURATE FOR ELECTRICAL WORK ONLY.

STATE OF CALIFORNIA - DEPARTMENT OF TRANSPORTATION
Caltrans
ELECTRICAL DESIGN
FUNCTIONAL SUPERVISOR: SHAHRAM SHAHRIARI
CALCULATED-DESIGNED BY: MANSOUR FEIZ
CHECKED BY: SHAHRAM SHAHRIARI
REVISED BY
DATE REVISED

LAST REVISION 12-15-08
DATE PLOTTED => 22-DEC-2009
TIME PLOTTED => 13:17

Dist	COUNTY	ROUTE	POST MILES TOTAL PROJECT	SHEET No.	TOTAL SHEETS
12	Ora	39	3.6	25	45

REGISTERED ELECTRICAL ENGINEER — DATE: 10-01-09

12-21-09
PLANS APPROVAL DATE

REGISTERED PROFESSIONAL ENGINEER — M.FEIZ — No. E015688 — EXP. 06/30/10 — ELECT — STATE OF CALIFORNIA

THE STATE OF CALIFORNIA OR ITS OFFICERS OR AGENTS SHALL NOT BE RESPONSIBLE FOR THE ACCURACY OR COMPLETENESS OF ELECTRONIC COPIES OF THIS PLAN SHEET.

NOTE: FOR ACCURATE RIGHT OF WAY DATA, CONTACT RIGHT OF WAY ENGINEERING AT THE DISTRICT OFFICE.

CONDUCTOR AND CONDUIT SCHEDULE

CONDUCTOR	CONDUCTOR RUN	1	2	3	4	5	6	7	8	9	10	11
12 CSC	VEHICULAR SIGNAL	8	1	4	3	2	2	1	2	2	1	-
3 CSC	PPB	8	1	4	3	2	2	1	2	2	1	-
EVC*	EVD	4(E)	-	2(E)	1(E)	1(E)	1(E)	-	1(E)	1(E)	1(E)	-
#12	IISNS	-	-	2	2	2	2	-	2	2	2	-
#10	LUMINAIRE	-	2	2	2	2	2	2	2	2	2	-
#8	SERVICE	2	-	-	-	-	-	-	-	-	-	-
DLC	Ø1	1	-	-	-	-	-	-	1	-	-	-
	Ø2	4	-	4	4	-	-	-	-	-	-	-
	Ø3	1	1	-	-	-	-	-	-	-	-	-
	Ø4	4	-	4	4	4	4	4	-	-	-	-
	Ø5	1	-	1	1	1	-	-	-	-	-	-
	Ø6	4	-	-	-	-	-	-	4	4	-	-
	Ø7	2	-	2	2	2	2	2	-	-	-	-
	Ø8	4	4	-	-	-	-	-	-	-	-	-
	TOTAL DLC	21	5	11	11	7	6	6	5	4	-	-
SIC	12 PAIR #19	2	-	-	-	-	-	-	-	-	-	2
CONDUIT SIZE		2-3"	4"	3½"	3"	3"	3"	2½"	2½"	2½"	2½"	2½"(E)

(E) = EXISTING
* = OPTICAL CABLE TYPE 3M MODEL M-138
ALL CONDUCTOR AND CONDUIT ARE NEW UNLESS OTHERWISE SHOWN.

POLE AND EQUIPMENT SCHEDULE

No.	STANDARD Type	SMA	LMA	VEH SIG MTG Mast Arm	Pole	PED SIG MTG	PPB Ø	ARROW	HPS LUM	IISNS
(A)	29A-5-100	55′	15′	3-MAS	SV-1-T	SP-1-T	8	←	310 W	Talbert Ave
(B)	15TS	-	15′	-	SV-2-TA	SP-1-T	2	→	200 W	-
(C)	26A-4-100	45′	15′	2-MAS	SV-1-T	SP-1-T	2	←	310 W	Beach Blvd
(D)	15TS	-	15′	-	SV-2-TA	SP-1-T	4	→	200 W	-
(E)	29A-5-100	55′	15′	3-MAS	SV-1-T	SP-1-T	4	←	310 W	Talbert Ave
(F)	15TS	-	15′		SV-2-TA	SP-1-T	6	→	200 W	-
(G)	26A-4-100	45′	15′	2-MAS	SV-1-T	SP-1-T	6	←	310 W	Beach Blvd
(H)	15TS	-	15′	-	SV-2-TA	SP-1-T	8	→	200 W	-

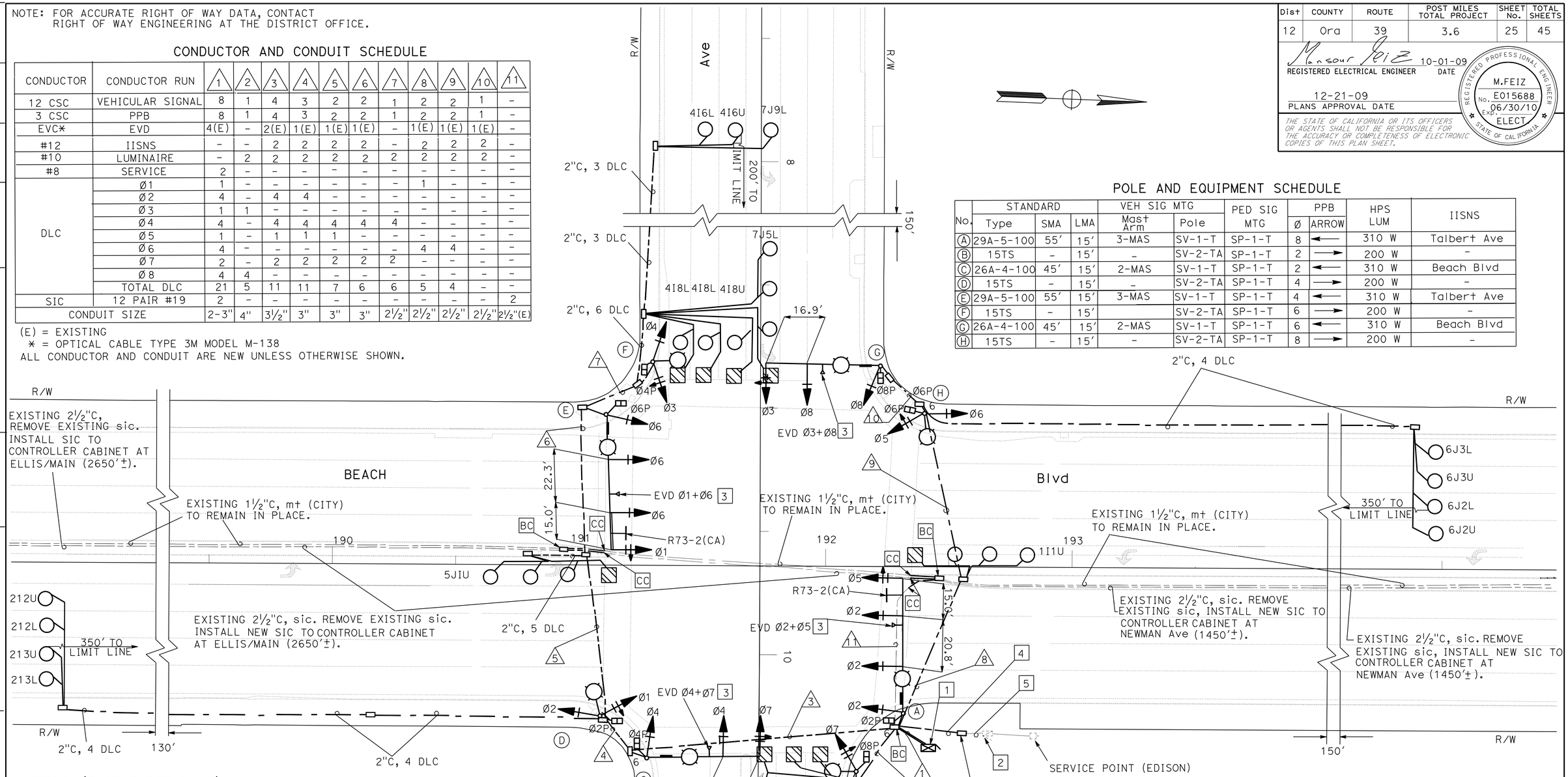

NOTES: (THIS SHEET ONLY)

1. INSTALL STATE-FURNISHED MODEL 2070 CONTROLLER WITH MODEL 332 CABINET AND BATTERY BACK UP SYSTEM
   THE CONTRACTOR SHALL PROVIDE BATTERIES AND BBS ENCLOSURE.
2. EXISTING 120/240 V TYPE III-BF SERVICE EQUIPMENT ENCLOSURE TO REMAIN IN PLACE. ID No. 12-55-039-0-03.50. INSTALL NEW TYPE V PEC.
   100 A, 240 V, 3P MAIN CB
   1-1P-120 V-40 A CB FOR SIGNAL (METERED)
   1-1P-120 V-30 A CB FOR LIGHTING (UNMETERED)
   1-1P-120 V-15 A CB FOR IISNS (UNMETERED)
3. INSTALL RELOCATED EMERGENCY VEHICLE DETECTOR.
4. 3"C, 2#10 (LTG), 2#12 (IISNS) AND 2#8 (SIG).
5. EXISTING 3"C, INSTALL 2#10 (LTG), 2#12 (IISNS) AND 2#8 (SIG).

THIS PLAN IS ACCURATE FOR ELECTRICAL WORK ONLY.

PHASE DIAGRAM

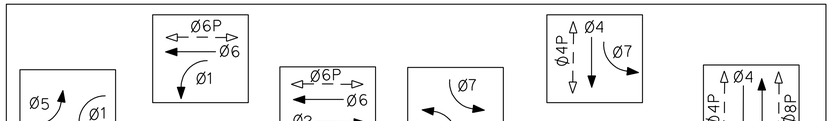

SIGNAL AND LIGHTING

SCALE: 1" = 20′

E-2

STATE OF CALIFORNIA - DEPARTMENT OF TRANSPORTATION
Caltrans
ELECTRICAL DESIGN
FUNCTIONAL SUPERVISOR: SHAHRAM SHAHRIARI
CALCULATED-DESIGNED BY: MANSOUR FEIZ
CHECKED BY: SHAHRAM SHAHRIARI
REVISED BY / DATE REVISED

LAST REVISION 12-15-08 | DATE PLOTTED => 23-DEC-2009 | TIME PLOTTED => 05:47

DIST	COUNTY	ROUTE	POST MILES TOTAL PROJECT	SHEET NO.	TOTAL SHEETS
12	Ora	39	3.6	26	45

REGISTERED CIVIL ENGINEER

November 17, 2006
PLANS APPROVAL DATE

REGISTERED PROFESSIONAL ENGINEER Michael Janzen No. 44788 Exp. 03-31-08 CIVIL STATE OF CALIFORNIA

The State of California or its officers or agents shall not be responsible for the accuracy or completeness of electronic copies of this plan sheet.

To accompany plans dated 12-21-09

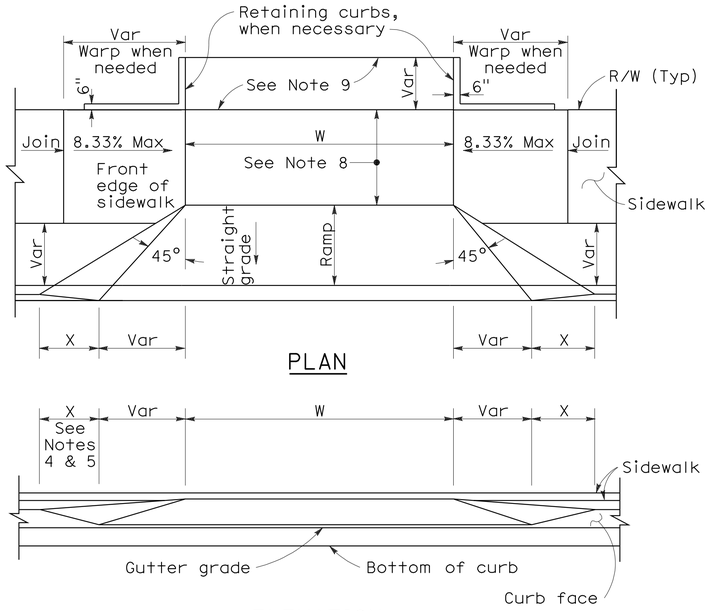

PLAN

ELEVATION

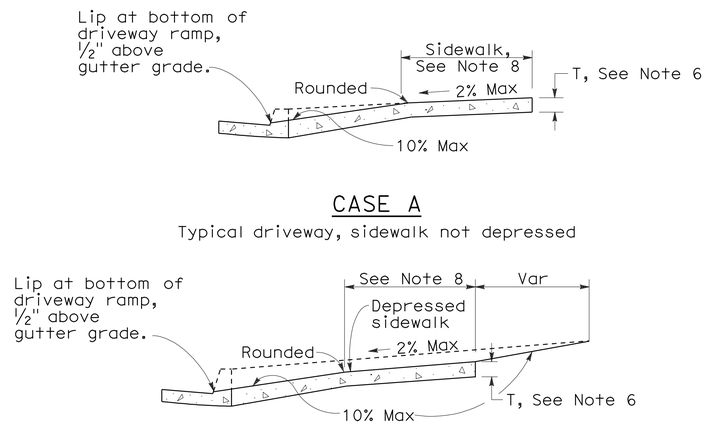

CASE A

Typical driveway, sidewalk not depressed

CASE B

Driveway with depressed sidewalk

SECTIONS

CURB QUANTITIES

TYPE	CUBIC YARDS PER LINEAR FOOT
A1-6	0.02585
A1-8	0.03084
A2-6	0.05903
A2-8	0.06379
A3-6	0.01036
A3-8	0.01435
B1-4	0.02185
B1-6	0.02930
B2-4	0.05515
B2-6	0.06171
B3-4	0.00641
B3-6	0.01074
B4	0.05709
D-4	0.04083
D-6	0.06804
E	0.06661

TABLE A

CURB TYPE	DIMENSIONS "H1"	"H2"	"W1"	"W2"
A1-6	1'-2"	6"	7½"	1½"
A1-8	1'-4"	8"	8"	2"
A2-6	1'-0"	6"	2'-7½"	1½"
A2-8	1'-2"	8"	2'-8"	2"
A3-6	6"	5"	7¼"	1¼"
A3-8	8"	7"	7¾"	1¾"
B1-4	1'-0"	4"	7½"	2½"
B1-6	1'-2"	6"	9"	4"
B2-4	10"	4"	2'-7½"	2½"
B2-6	1'-0"	6"	2'-9"	4"
B3-4	4"	3"	7"	2"
B3-6	6"	5"	8½"	3½"
D-4	10"	4"	1'-6"	1'-1"
D-6	1'-0"	6"	2'-2"	1'-8"

DRIVEWAYS

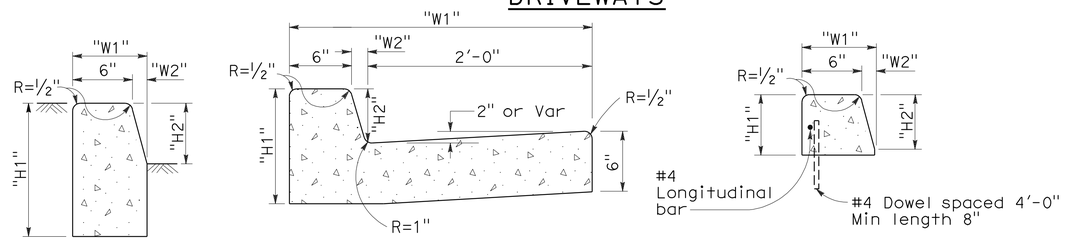

TYPE A1 CURBS
See Table A

TYPE A2 CURBS
See Table A

TYPE A3 CURBS
Superimposed on existing pavement
See Table A

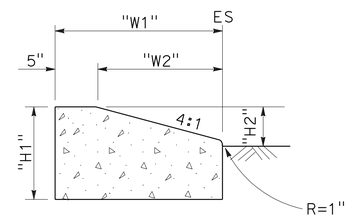

TYPE D CURBS
See Table A

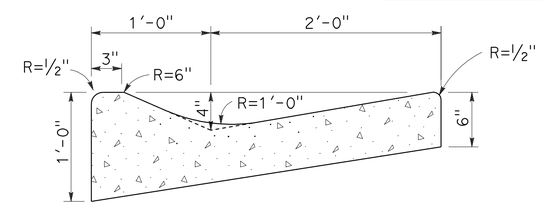

TYPE E CURB

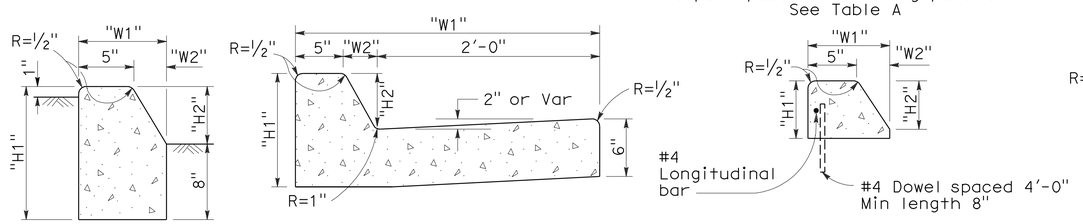

TYPE B1 CURBS
See Table A

TYPE B2 CURBS
See Table A

TYPE B3 CURBS
Superimposed on existing pavement
See Table A

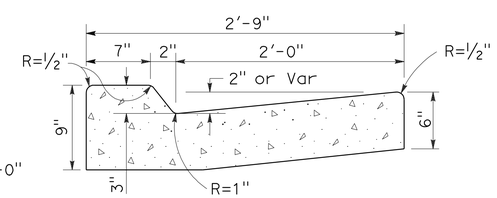

TYPE B4 CURBS

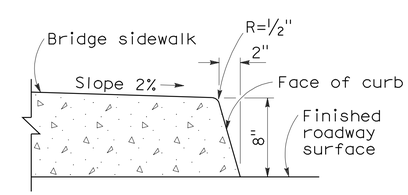

TYPE H CURB
On Bridges

CURBS

NOTES:

1. Case A driveway section typically applies.
2. Use Case B driveway section when ramp slopes would exceed 10% in Case A.
3. Use Case B driveway section when sidewalk cross slope would exceed 2% in Case A.
4. X=3'-0" except for curb heights over 10" where 4:1 slopes shall be used on curb slope.
5. X is a variable when sidewalk is located where wheelchairs may traverse the surface. Slopes shall not exceed 8.33%.
6. Sidewalk and ramp thickness "T" at driveway shall be 4" for residental and 6" for commercial.
7. Difference in slope of the driveway ramp and the slope of a line between the gutter and a point on the roadway 5'-0" from gutter line shall not exceed 15%. Reduce driveway ramp slope, not gutter slope, where required.
8. Minimum width of clear passageway for sidewalk shall be 4'-0".
9. Retaining curbs and acquisition of construction easement may be necessary for narrow sidewalks or curb heights in excess of 6".
10. Across the pedestrian route at curb ramp locations, the gutter pan slope shall not exceed 1" of depth for each 2'-0" of width.

STATE OF CALIFORNIA
DEPARTMENT OF TRANSPORTATION

CURBS AND DRIVEWAYS

NO SCALE

RSP A87A DATED NOVEMBER 17, 2006 SUPERSEDES STANDARD PLAN A87A DATED MAY 1, 2006 - PAGE 113 OF THE STANDARD PLANS BOOK DATED MAY 2006.

REVISED STANDARD PLAN RSP A87A

2006 REVISED STANDARD PLAN RSP A87A

10-25-06

DIST	COUNTY	ROUTE	POST MILES TOTAL PROJECT	SHEET NO.	TOTAL SHEETS
12	Ora	39	3.6	27	45

REGISTERED CIVIL ENGINEER

September 1, 2006
PLANS APPROVAL DATE

REGISTERED PROFESSIONAL ENGINEER — Hector David Cordova — No. C41957 — Exp. 3-31-08 — CIVIL — STATE OF CALIFORNIA

The State of California or its officers or agents shall not be responsible for the accuracy or completeness of electronic copies of this plan sheet.

To accompany plans dated 12-21-09

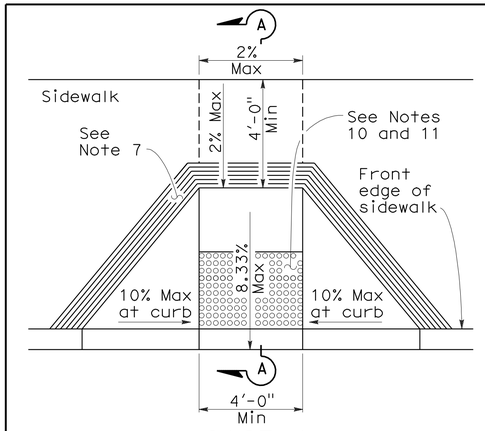

CASE A

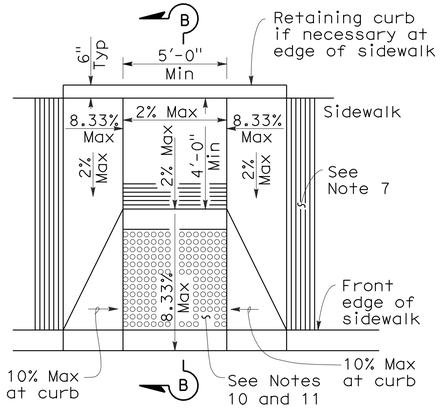

CASE B

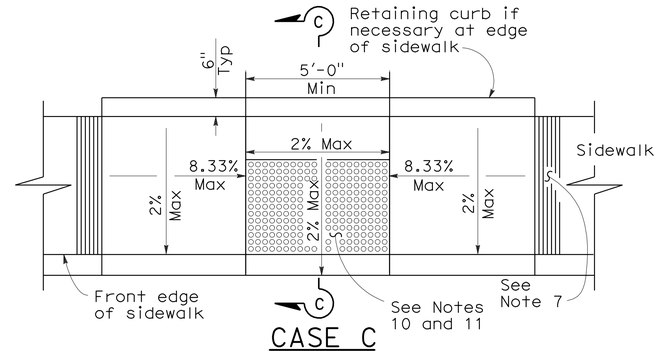

CASE C

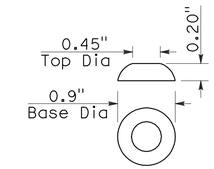

RAISED TRUNCATED DOME

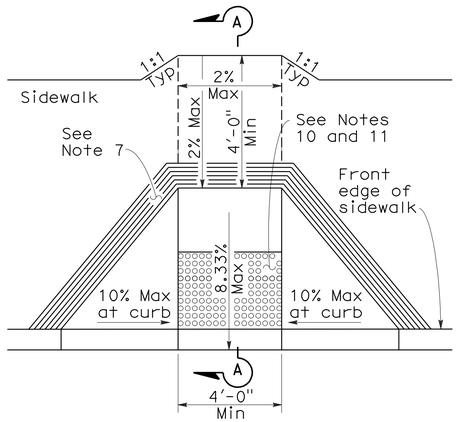

CASE D

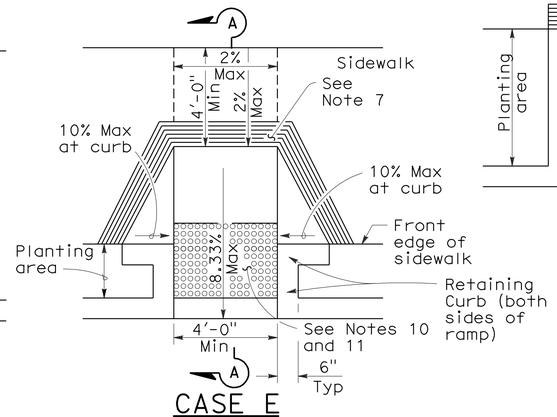

CASE E

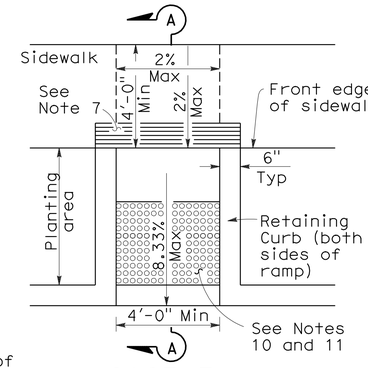

CASE F

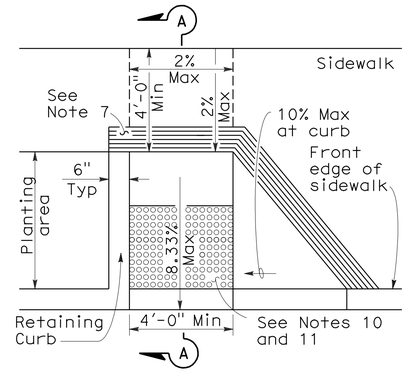

CASE G

See Note 4

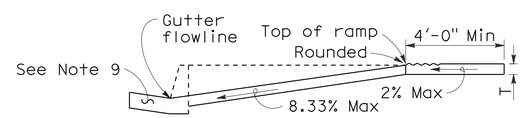

SECTION A-A

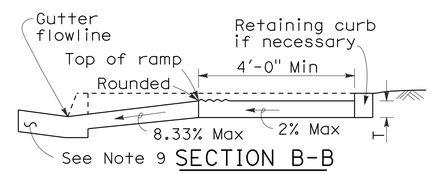

SECTION B-B

Depress entire sidewalk as required

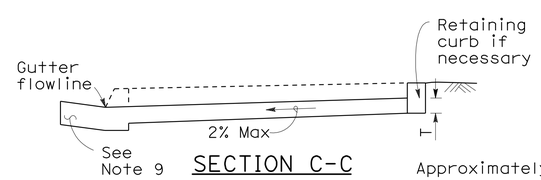

SECTION C-C

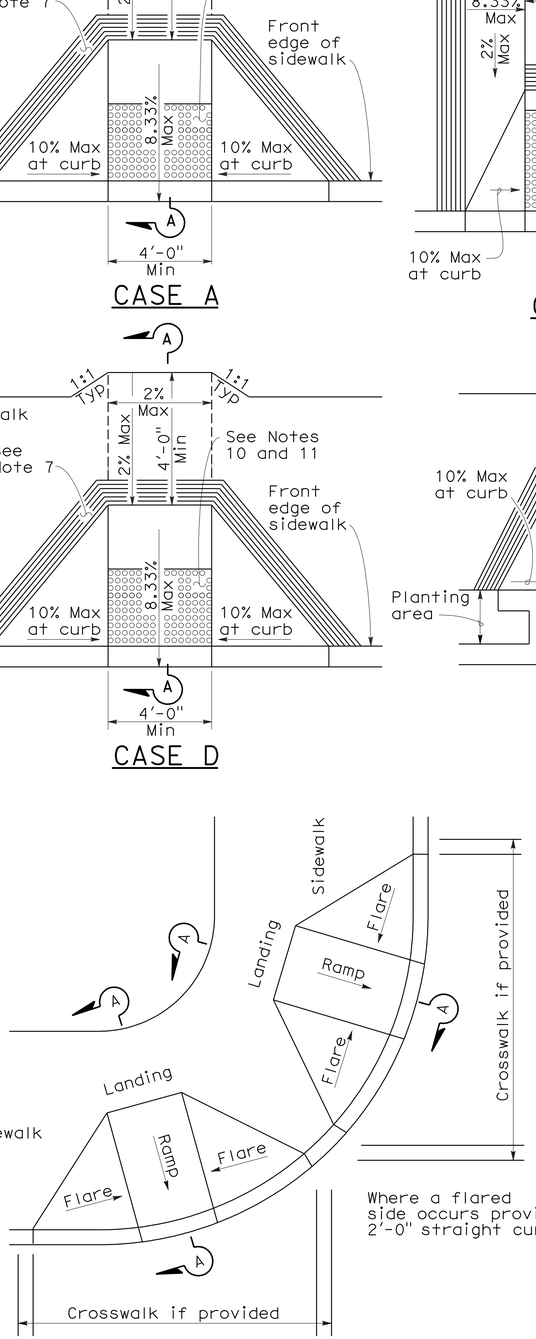

DETAIL A

TYPICAL TWO-RAMP CORNER INSTALLATION

See Note 1

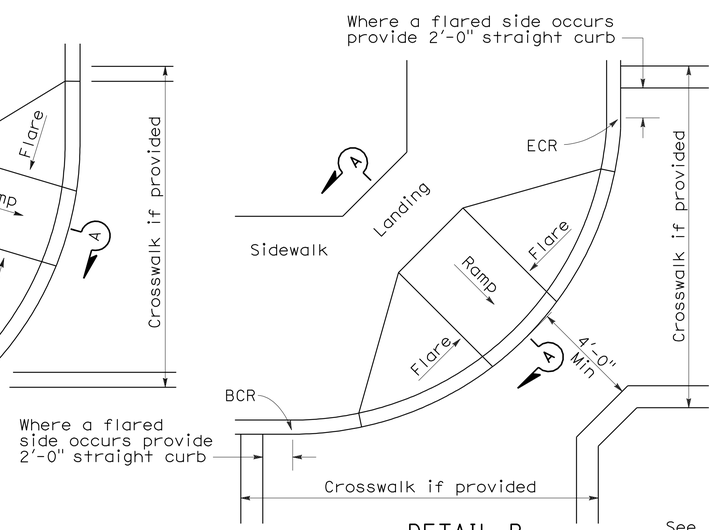

DETAIL B

TYPICAL ONE-RAMP CORNER INSTALLATION

See Notes 1 and 3

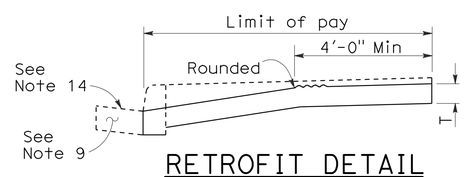

RETROFIT DETAIL

Existing curb and sidewalk

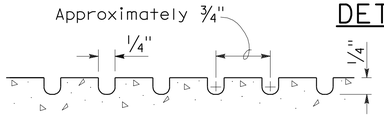

GROOVING DETAIL

NOTES:

1. As site conditions dictate, Case A through Case G curb ramps may be used for corner installations similar to those shown in Detail A and Detail B. The case of curb ramps used in Detail A do not have to be the same. Case A through Case G curb ramps also may be used at mid block locations, as site conditions dictate.
2. If distance from curb to back of sidewalk is too short to accommodate ramp and 4'-0" platform (landing) as shown in Case A, the sidewalk may be depressed longitudinally as in Case B, or C or may be widened as in Case D.
3. When ramp is located in center of curb return, crosswalk configuration must be similar to that shown for Detail B.
4. As site conditions dictate, the retaining curb side and the flared side of the Case G ramp shall be constructed in reversed position.
5. If located on a curve, the sides of the ramp need not be parallel, but the minimum width of the ramp shall be 4'-0".
6. Side slope of ramp flares vary uniformly from a maximum of 10% at curb to conform with longitudinal sidewalk slope adjacent to top of the ramp, except in Case C and Case F.
7. The curb ramp shall be outlined, as shown, with a 1'-0" wide border with 1/4" grooves approximately 3/4" on center. See grooving detail.
8. Transitions from ramps and landing to walks, gutters or streets shall be flush and free of abrupt changes.
9. Maximum slopes of adjoining gutters, the road surface immediately adjacent to the curb ramp or accessible route shall not exceed 5 percent within 4'-0" of the top and bottom of the curb ramp.
10. Curb ramps shall have a detectable warning surface that extends the full width and 3'-0" depth of the ramp. Detectable Warning Surfaces shall conform to the details on this plan and the requirements in the Special Provisions.
11. The edge of the detectable warning surface nearest the street shall be between 6" and 8" from the gutter flowline.
12. Sidewalk and ramp thickness, "T", shall be 3 1/2" minimum.
13. Utility pull boxes, manholes, vaults and all other utility facilities within the boundaries of the curb ramp will be relocated or adjusted to grade by the owner prior to, or in conjunction with, curb ramp construction.
14. For retrofit conditions, removal and replacement of curb apron will be at the Contractor's option, unless otherwise shown on project plans.

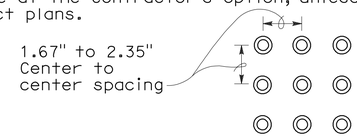

RAISED TRUNCATED DOME PATTERN (IN-LINE)

DETECTABLE WARNING SURFACE

See Note 10

STATE OF CALIFORNIA
DEPARTMENT OF TRANSPORTATION

CURB RAMP DETAILS

NO SCALE

RSP A88A DATED SEPTEMBER 1, 2006 SUPERSEDES STANDARD PLAN A88A DATED MAY 1, 2006 - PAGE 115 OF THE STANDARD PLANS BOOK DATED MAY 2006.

REVISED STANDARD PLAN RSP A88A

2006 REVISED STANDARD PLAN RSP A88A

8-3-06

DIST	COUNTY	ROUTE	POST MILES TOTAL PROJECT	SHEET NO.	TOTAL SHEETS
12	Ora	39	3.6	28	45

LICENSED LANDSCAPE ARCHITECT

June 5, 2009
PLANS APPROVAL DATE

The State of California or its officers or agents shall not be responsible for the accuracy or completeness of electronic copies of this plan sheet.

LICENSED LANDSCAPE ARCHITECT — Gregory A. Balzer — 2576 — 10 expiration date — 2-28-11 renewal date — 5-14-09 date — STATE OF CALIFORNIA

To accompany plans dated 12-21-09

A

AB	aggregate base
ABS	acrylonitrile-butadiene-styrene
AC	asphalt concrete
Adj	adjacent/adjustable
AIC	auxiliary irrigation controller
Alt	alternative
AMEND	amendment
ARV	air release valve
AUTO	automatic
AUX	auxiliary
AVB	atmospheric vacuum breaker

B

B&B	balled and burlapped
B/B	brass/bronze
B/B/PL	brass/bronze/plastic
B/PL	brass/plastic
BFM	bonded fiber matrix
Bit Ctd	bituminous coated
BP	booster pump
BPA	backflow preventer assembly
BPAE	backflow preventer assembly in enclosure
BPE	backflow preventer enclosure
BV	ball valve

C

CAP	corrugated aluminum pipe
CARV	combination air release valve
CCA	cam coupler assembly
CEC	controller enclosure cabinet
CHDPE	corrugated high density polyethylene
CL	chain link
CNC	control and neutral conductors
Conc	concrete
Cond	conduit
CSP	corrugated steel pipe
CST	center strip
CV	check valve

D

Dia	diameter
DIP	ductile iron pipe
DN	diameter nominal

E

EA	each
Elect	electric/electrical
Elev	elevation
ENCL	enclosure
EP	edge of pavement
ES	edge of shoulder
EST	end strip
ESTB	establishment
ETW	edge of traveled way

F

F	full circle
F/P	full/part circle
FAU	filter assembly unit
FCV	flow control valve
FERT	fertilizer
FG	finished grade
FIPT	female iron pipe thread
FIS	fertilizer injector system
FL	flow line
FM	flow monitor
FS	flow sensor
Ft	foot/feet
FV	flush valve

G

GAL	Gallon(s)
Galv	galvanized
GARV	garden valve
GPH	gallons per hour
GPM	gallons per minute
GSP	galvanized steel pipe
GV	gate valve

H

H	half circle
HB	hose bib
HDPE	high density polyethylene
HP	horsepower/hinge point
HPL	high pressure line
Hwy	highway

I

IC	irrigation controller
ICC	irrigation controller(s) in controller enclosure cabinet
ID	inside diameter
In	inches
IFS	irrigation filtration system
IPS	iron pipe size
IPT	iron pipe thread
Irr	irrigation

L

L	length
LF	linear foot

M

Max	maximum
MBGR	metal beam guard railing
MCV	manual control valve
MIC	master irrigation controller
Min	minimum
MIPT	male iron pipe thread
Misc	miscellaneous
Mtl	material
MVP	maintenance vehicle pullout

N

NCN	no common name
NL	nozzle line
No.	number
NPT	national pipe thread

O

O/C	on center
OD	outside diameter
Oz	ounce

P

P	part circle
PB	pull box
PCC	portland cement concrete
PE	polyethylene
Pkt	packet
PL	plastic
PLT	plant/planting
PLT ESTB	plant establishment
PM	post mile
PR	pressure rated
PRLV	pressure relief valve
PSFM	polymer stabilized fiber matrix
PSI	pounds per square inch
PRV	pressure reducing valve
PVC	polyvinyl chloride
Pvmt	pavement

Q

Q	quarter circle
QCV	quick coupling valve

R

R	radius
RCP	reinforced concrete pipe
RCV	remote control valve
RCVM	remote control valve (master)
RCVMF	remote control valve (master) w/ flow meter
RCW	recycled/reclaimed water
RECP	rolled erosion control product
REQ	required
R/W	right of way

S

S	slip
SCC	sprinkler control conduit
SCH	schedule
SF	state-furnished
Shld	shoulder
SQFT	square foot/feet
SQYD	square yard(s)
SST	side strip
Sta	station
Std	standard
SW	sidewalk/sound wall

T

T	third circle/thread
TLS	truck loading standpipe
TQ	three quarter circle
TRM	turf reinforcement mat
TRVD	traveled
TT	two third circle
Typ	typical

U

UG	underground

V

VAU	valve assembly unit

W

W	width
W/	with
WM	water meter
WS	wye strainer
WSP	welded steel pipe
WWM	welded wire mesh

NOTE:

FOR ADDITIONAL ABBREVIATIONS, SEE STANDARD PLANS A10A AND A10B.

STATE OF CALIFORNIA
DEPARTMENT OF TRANSPORTATION

PLANTING AND IRRIGATION ABBREVIATIONS

NO SCALE

RSP H1 DATED JUNE 5, 2009 SUPERSEDES STANDARD PLAN H1
DATED MAY 1, 2006 - PAGE 201 OF THE STANDARD PLANS BOOK DATED MAY 2006.

REVISED STANDARD PLAN RSP H1

2006 REVISED STANDARD PLAN RSP H1

5-28-09

DIST	COUNTY	ROUTE	POST MILES TOTAL PROJECT	SHEET NO.	TOTAL SHEETS
12	Ora	39	3.6	29	45

LICENSED LANDSCAPE ARCHITECT

June 5, 2009
PLANS APPROVAL DATE

The State of California or its officers or agents shall not be responsible for the accuracy or completeness of electronic copies of this plan sheet.

LICENSED LANDSCAPE ARCHITECT — Gregory A. Balzer — 2576 — 10 (expiration) 2-28-11 (renewal date) 5-14-09 (date) — STATE OF CALIFORNIA

To accompany plans dated 12-21-09

EXISTING	PROPOSED	ITEM DESCRIPTION
		WATER METER (WM)
		BACKFLOW PREVENTER ASSEMBLY (BPA)
		BACKFLOW PREVENTER ASSEMBLY IN ENCLOSURE (BPAE)
		BACKFLOW PREVENTER ENCLOSURE (BPE)
		BOOSTER PUMP (BP)
		TRUCK LOADING STANDPIPE (TLS)
FS	FS	FLOW SENSOR (FS)
X	X	MASTER IRRIGATION CONTROLLER (MIC)
		AUXILIARY IRRIGATION CONTROLLER (AIC)
		IRRIGATION CONTROLLER (IC)/ IRRIGATION CONTROLLER (IC) (BATTERY) IRRIGATION CONTROLLER (IC) (SOLAR)
		IRRIGATION CONTROLLER(S) IN CONTROLLER ENCLOSURE CABINET (ICC)
		CONTROL AND NEUTRAL CONDUCTORS (CNC)
SCC	SCC	SPRINKLER CONTROL CONDUIT (SCC)
		IRRIGATION CROSSOVER
		EXTEND IRRIGATION CROSSOVER
		IRRIGATION SLEEVE
dip	DIP	DUCTILE IRON PIPE (SUPPLY LINE) (MAIN) (DIP)
		GALVANIZED STEEL PIPE (SUPPLY LINE) (MAIN) (GSP)
		GALVANIZED STEEL PIPE (SUPPLY LINE) (LATERAL) (GSP)
		PLASTIC PIPE (PR 200) (SUPPLY LINE) (MAIN)
		PLASTIC PIPE (PR 200) (SUPPLY LINE) (LATERAL)
		PLASTIC PIPE (IRRIGATION LINE)
		REMOTE CONTROL VALVE (RCV) REMOTE CONTROL VALVE (MASTER) (RCVM) REMOTE CONTROL VALVE (MASTER) W/FLOW METER (RCVMF)
		MANUAL CONTROL VALVE (MCV)
		VALVE ASSEMBLY UNIT (VAU)
		WYE STRAINER (WS)
		FILTER ASSEMBLY UNIT (FAU)
		GATE VALVE (GV)
		BALL VALVE (BV)

EXISTING	PROPOSED	ITEM DESCRIPTION
		QUICK COUPLING VALVE (QCV)
		CAM COUPLER ASSEMBLY (CCA)
		PRESSURE REDUCING VALVE (PRV)
		PRESSURE RELIEF VALVE (PRLV)
		FLOW CONTROL VALVE (FCV)
		COMBINATION AIR RELEASE VALVE (CARV)
		CHECK VALVE (CV)
		FLUSH VALVE (FV)
		NOZZLE LINE W/TURNING UNION
		IRRIGATION SYSTEM
		IRRIGATION SYSTEM TO BE REMOVED
		CHAIN LINK GATE
		QUICK COUPLING VALVE W/SPRINKLER PROTECTOR
3	3	SPRINKLER W/SPRINKLER PROTECTOR
	C	CONNECT TO EXISTING SYSTEM
		CAP
		CAP EXISTING

VALVE CODE

RCV SIZE
IRRIGATION CONTROLLER
CONTROLLER STATION
VALVE IN PARALLEL (IF APPLICABLE)
GPM
QUANTITY OF SPRINKLERS (WHEN SHOWN)

* 2½"-A-2b-40 -60

MCV SIZE
VALVE NUMBER
GPM
QUANTITY OF TYPE SPRINKLERS (WHEN SHOWN)

* 2"-3-30 -50

* VALVE CODES FOR EXISTING VALVES ARE SHOWN IN A DASHED ENCLOSURE.

STATE OF CALIFORNIA
DEPARTMENT OF TRANSPORTATION

PLANTING AND IRRIGATION SYMBOLS

NO SCALE

RSP H2 DATED JUNE 5, 2009 SUPERSEDES RSP H2 DATED MARCH 7, 2008 AND STANDARD PLAN H2 DATED MAY 1, 2006 - PAGE 202 OF THE STANDARD PLANS BOOK DATED MAY 2006.

REVISED STANDARD PLAN RSP H2

2006 REVISED STANDARD PLAN RSP H2

5-11-09

DIST	COUNTY	ROUTE	POST MILES TOTAL PROJECT	SHEET NO.	TOTAL SHEETS
12	Ora	39	3.6	30	45

LICENSED LANDSCAPE ARCHITECT

June 5, 2009
PLANS APPROVAL DATE

LICENSED LANDSCAPE ARCHITECT — Gregory A. Bolzer — 2576 — STATE OF CALIFORNIA
10-28-10 Expiration date
2-28-11 Renewal date
5-14-09 Date

The State of California or its officers or agents shall not be responsible for the accuracy or completeness of electronic copies of this plan sheet.

To accompany plans dated 12-21-09

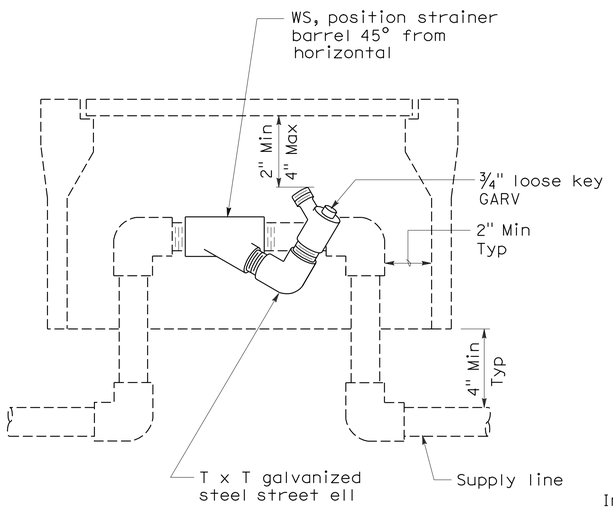

ELEVATION
WYE STRAINER

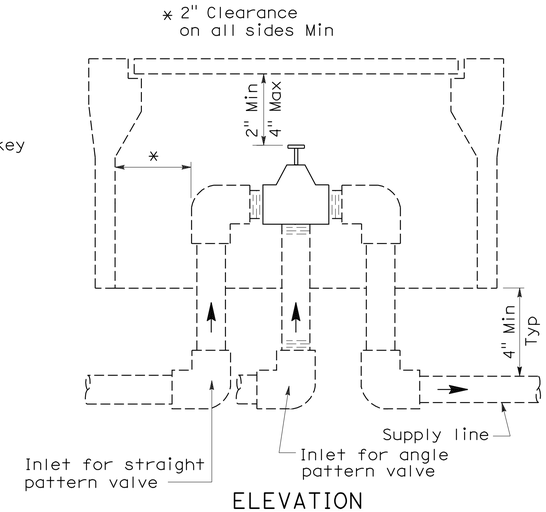

ELEVATION
VALVE

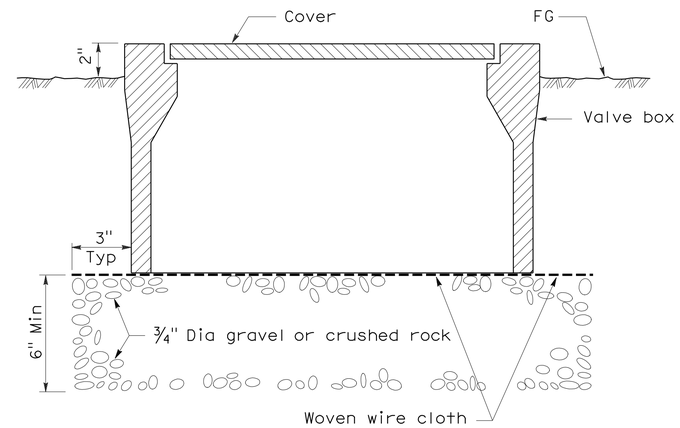

SECTION
VALVE BOX

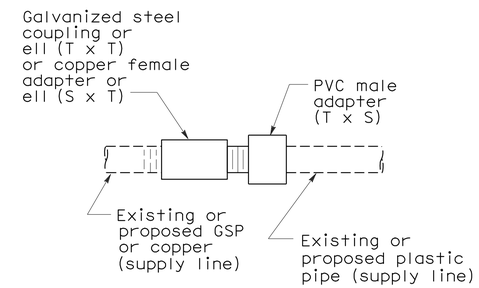

PLAN
GALVANIZED OR COPPER PIPE CONNECTION TO PLASTIC PIPE

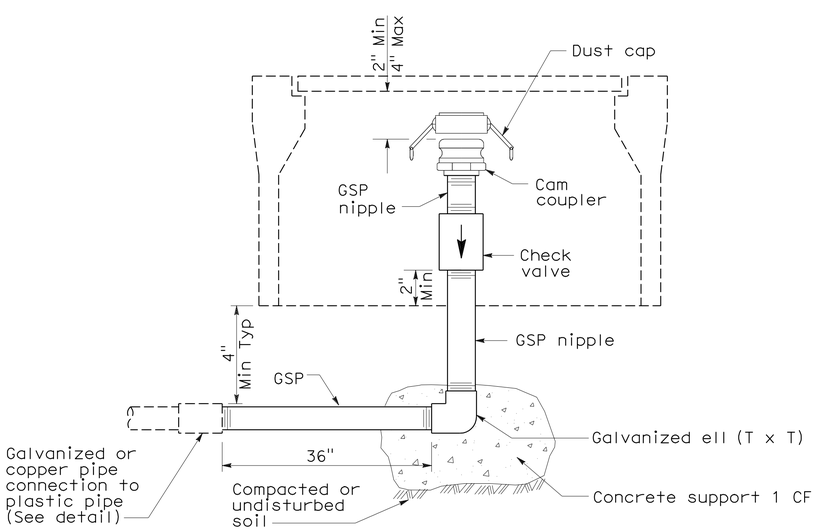

ELEVATION
CAM COUPLER ASSEMBLY

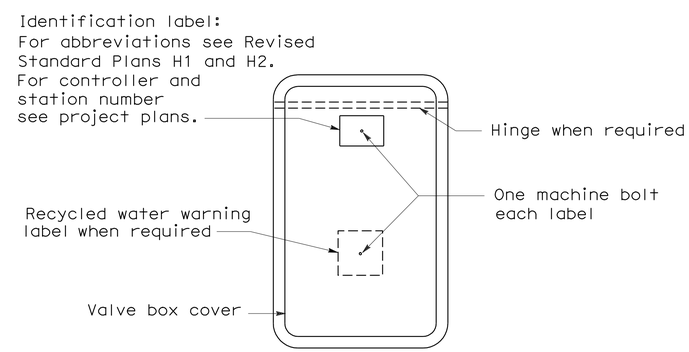

PLAN

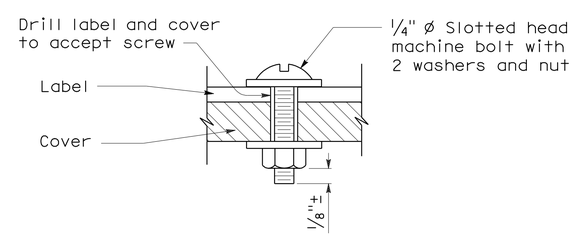

SECTION
VALVE BOX IDENTIFICATION

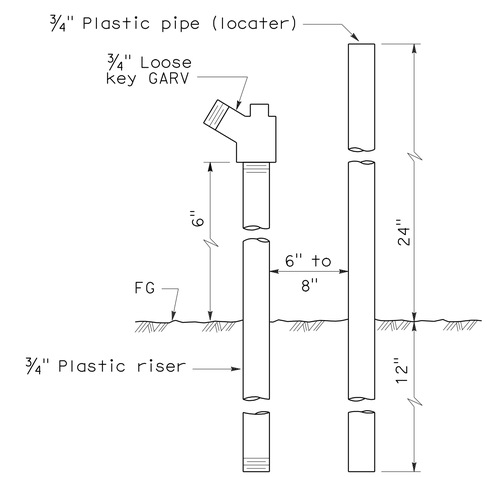

ELEVATION
FLUSH VALVE

STATE OF CALIFORNIA
DEPARTMENT OF TRANSPORTATION

PLANTING AND IRRIGATION DETAILS

NO SCALE

RSP H7 DATED JUNE 5, 2009 SUPERSEDES STANDARD PLAN H7
DATED MAY 1, 2006 - PAGE 207 OF THE STANDARD PLANS BOOK DATED MAY 2006.

REVISED STANDARD PLAN RSP H7

2006 REVISED STANDARD PLAN RSP H7

5-28-09

DIST	COUNTY	ROUTE	POST MILES TOTAL PROJECT	SHEET NO.	TOTAL SHEETS
12	Ora	39	3.6	31	45

LICENSED LANDSCAPE ARCHITECT

June 5, 2009
PLANS APPROVAL DATE

The State of California or its officers or agents shall not be responsible for the accuracy or completeness of electronic copies of this plan sheet.

LICENSED LANDSCAPE ARCHITECT — Gregory A. Balzer — 2576 — 10-31-11 (Renewal Date) — 5-14-09 (Date) — STATE OF CALIFORNIA

To accompany plans dated 12-21-09

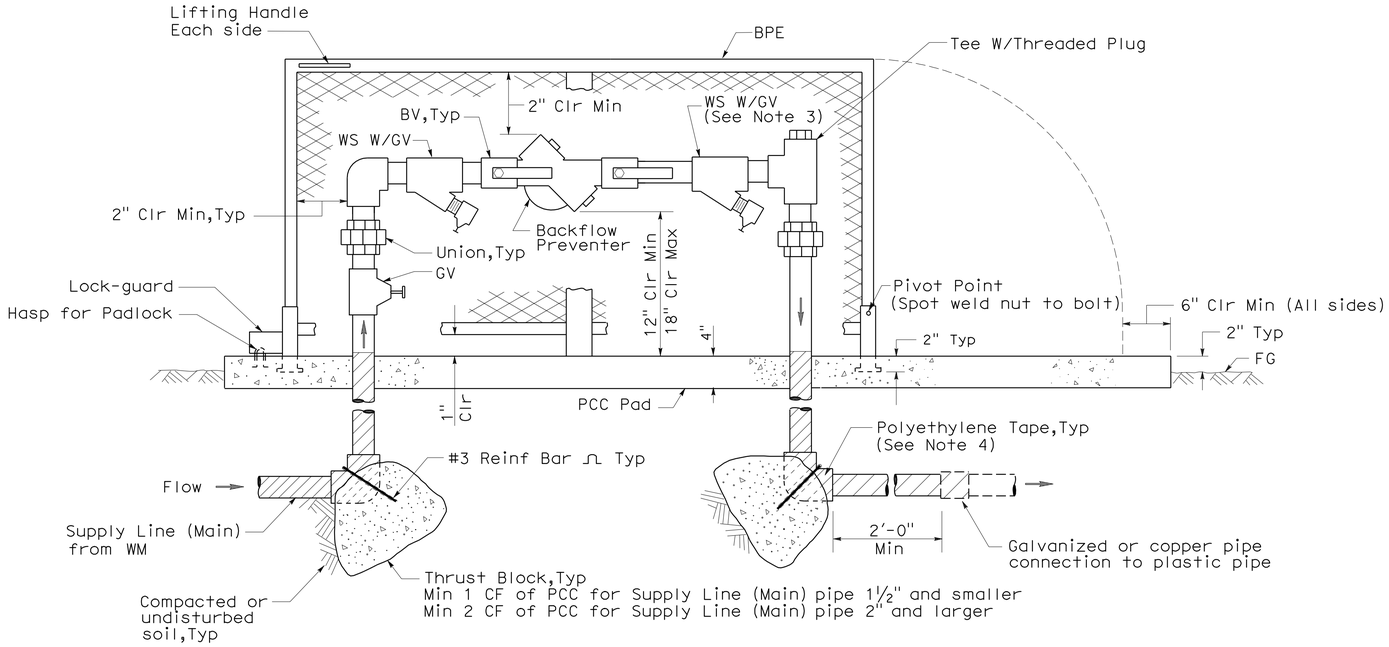

ELEVATION

BACKFLOW PREVENTER ASSEMBLY IN ENCLOSURE (ONE PIECE)

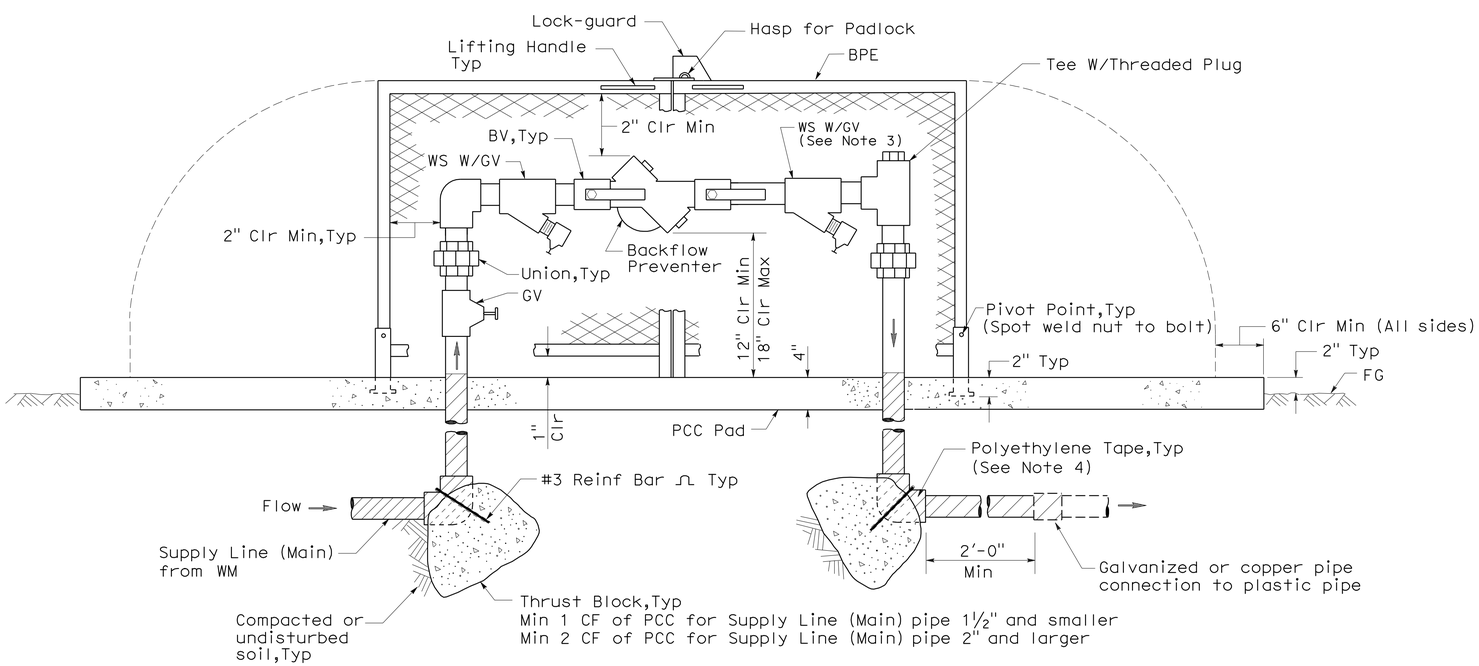

ELEVATION

BACKFLOW PREVENTER ASSEMBLY IN ENCLOSURE (TWO PIECE)

NOTES:

1. Wye strainer and fittings must be the same size as the backflow preventer shown on the plans.
2. Backflow preventer assembly manifold pipe must be the same pipe as the supply line (main) pipe to be installed from the water meter to the backflow preventer assembly.
3. Wye strainer location shown downstream of the backflow preventer is for District 11 projects only.
4. All metal in contact with soil and Portland Cement Concrete must be polyethylene wrapped using 2" wide plastic backed adhesive tape 20 mil thick with ½" overlap.

STATE OF CALIFORNIA
DEPARTMENT OF TRANSPORTATION

PLANTING AND IRRIGATION DETAILS

NO SCALE

RSP H8 DATED JUNE 5, 2009 SUPERSEDES STANDARD PLAN H8
DATED MAY 1, 2006 - PAGE 208 OF THE STANDARD PLANS BOOK DATED MAY 2006.

REVISED STANDARD PLAN RSP H8

2006 REVISED STANDARD PLAN RSP H8

5-28-09

DIST	COUNTY	ROUTE	POST MILES TOTAL PROJECT	SHEET NO.	TOTAL SHEETS
12	Ora	39	3.6	32	45

Randell D. Hiatt
REGISTERED CIVIL ENGINEER

June 6, 2008
PLANS APPROVAL DATE

REGISTERED PROFESSIONAL ENGINEER
Randell D. Hiatt
No. C50200
Exp. 6-30-09
CIVIL
STATE OF CALIFORNIA

The State of California or its officers or agents shall not be responsible for the accuracy or completeness of electronic copies of this plan sheet.

To accompany plans dated 12-21-09

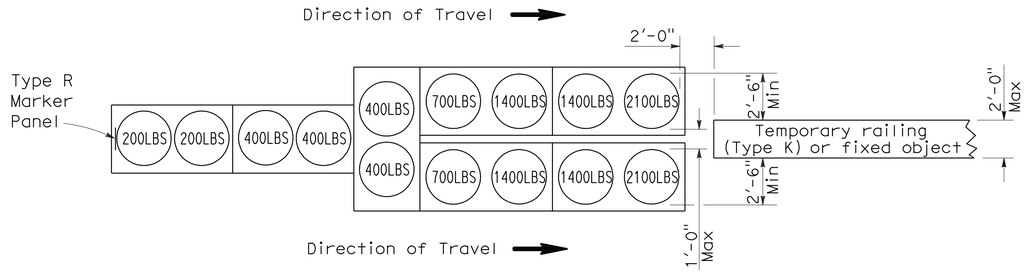

ARRAY 'TU14'

Approach speed 45 mph or more

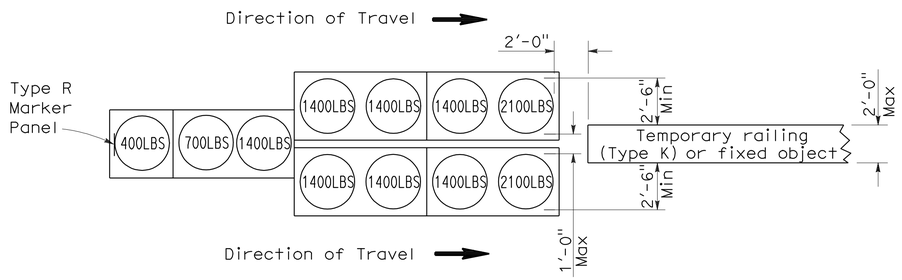

ARRAY 'TU11'

Approach speed less than 45 mph

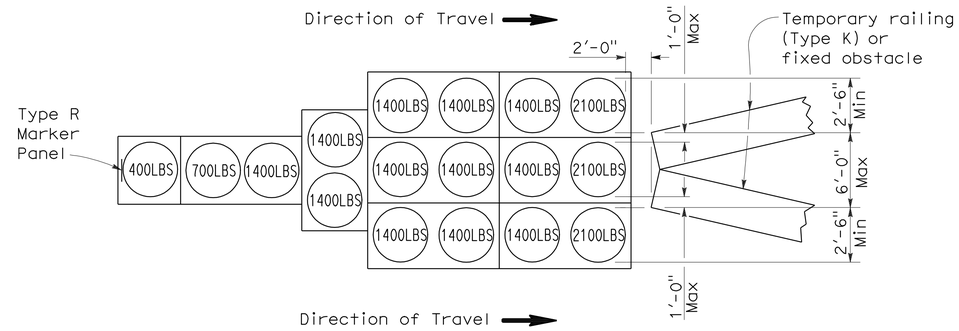

ARRAY 'TU17'

Approach speed less than 45 mph

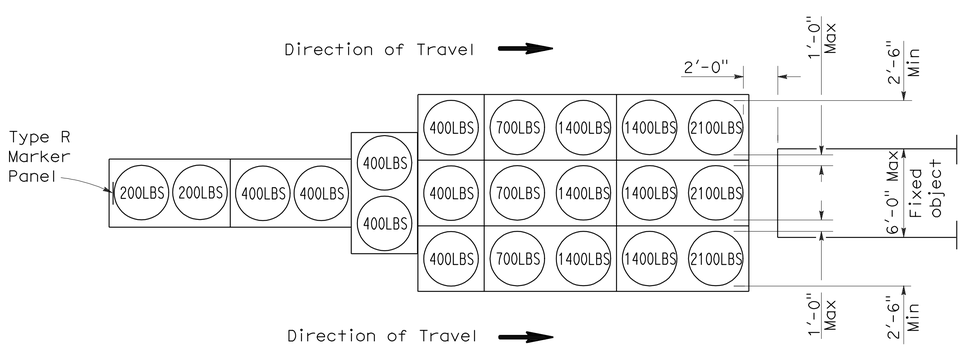

ARRAY 'TU21'

Approach speed 45 mph or more

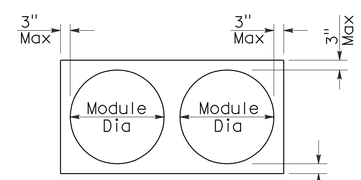

PLAN

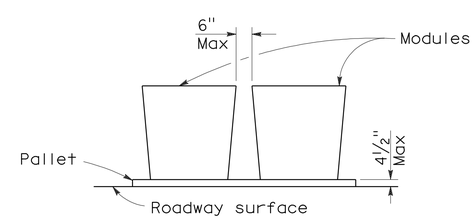

ELEVATION

CRASH CUSHION PALLET DETAIL

See Note 7

NOTES:

1. (XXX) Indicates sand filled module location and weight of sand in pounds for each module. Module spacing is based on the greater diameter of the module.
2. All sand weights are nominal.
3. Temporary crash cushion arrays shall not encroach on the traveled way.
4. Place the top of Type R marker panel 1" below the module lid.
5. Refer to Standard Plan A73B for marker details.
6. Approach speeds indicated conform to NCHRP 350 Report criteria.
7. Use of pallets is optional.

STATE OF CALIFORNIA
DEPARTMENT OF TRANSPORTATION

TEMPORARY CRASH CUSHION, SAND FILLED (UNIDIRECTIONAL)

NO SCALE

RSP T1A DATED JUNE 6, 2008 SUPERSEDES STANDARD PLAN T1A
DATED MAY 1, 2006 - PAGE 211 OF THE STANDARD PLANS BOOK DATED MAY 2006.

REVISED STANDARD PLAN RSP T1A

2006 REVISED STANDARD PLAN RSP T1A

DIST	COUNTY	ROUTE	POST MILES TOTAL PROJECT	SHEET NO.	TOTAL SHEETS
12	Ora	39	3.6	33	45

Randell D. Hiatt
REGISTERED CIVIL ENGINEER

June 6, 2008
PLANS APPROVAL DATE

REGISTERED PROFESSIONAL ENGINEER
Randell D. Hiatt
No. C50200
Exp. 6-30-09
CIVIL
STATE OF CALIFORNIA

The State of California or its officers or agents shall not be responsible for the accuracy or completeness of electronic copies of this plan sheet.

To accompany plans dated 12-21-09

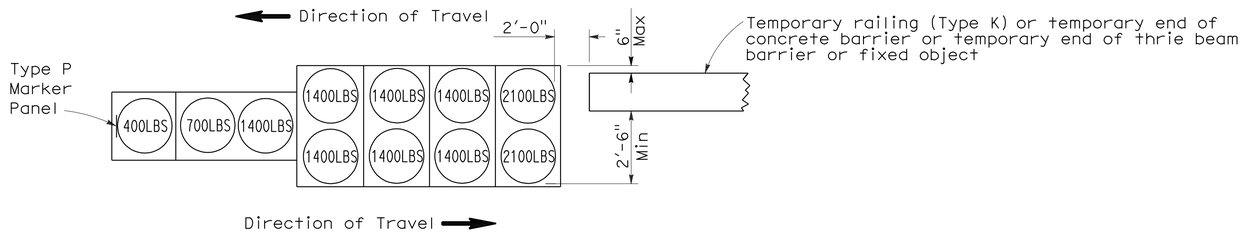

ARRAY 'TB11'

Approach speed less than 45 mph

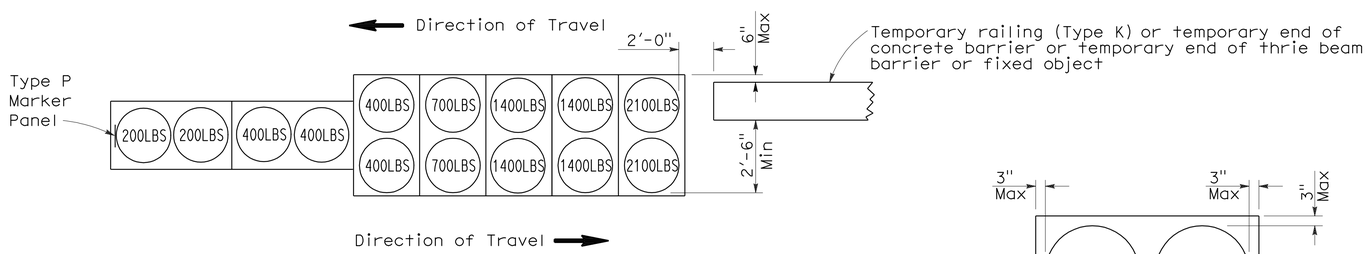

ARRAY 'TB14'

Approach speed 45 mph or more

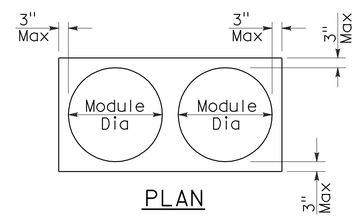

PLAN

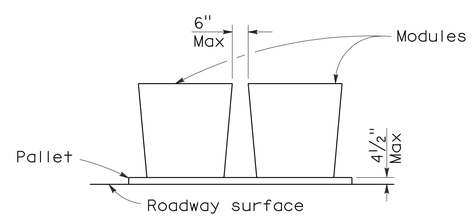

ELEVATION

CRASH CUSHION PALLET DETAIL

See Note 7

NOTES:

1. (XXX) Indicates sand filled module location and weight of sand in pounds for each module. Module spacing is based on the greater diameter of the module.
2. All sand weights are nominal.
3. Temporary crash cushion arrays shall not encroach on the traveled way.
4. Place the Type P marker panel so that the bottom of the panel rests upon the pallet.
5. Refer to Standard Plan A73B for marker details.
6. Approach speeds indicated conform to NCHRP 350 Report criteria.
7. Use of pallets is optional.

STATE OF CALIFORNIA
DEPARTMENT OF TRANSPORTATION

TEMPORARY CRASH CUSHION, SAND FILLED (BIDIRECTIONAL)

NO SCALE

RSP T1B DATED JUNE 6, 2008 SUPERSEDES STANDARD PLAN T1B
DATED MAY 1, 2006 - PAGE 212 OF THE STANDARD PLANS BOOK DATED MAY 2006.

REVISED STANDARD PLAN RSP T1B

2006 REVISED STANDARD PLAN RSP T1B

5-15-08

DIST	COUNTY	ROUTE	POST MILES TOTAL PROJECT	SHEET NO.	TOTAL SHEETS
12	Ora	39	3.6	34	45

Randell D. Hiatt
REGISTERED CIVIL ENGINEER

June 6, 2008
PLANS APPROVAL DATE

REGISTERED PROFESSIONAL ENGINEER
Randell D. Hiatt
No. C50200
Exp. 6-30-09
CIVIL
STATE OF CALIFORNIA

The State of California or its officers or agents shall not be responsible for the accuracy or completeness of electronic copies of this plan sheet.

To accompany plans dated 12-21-09

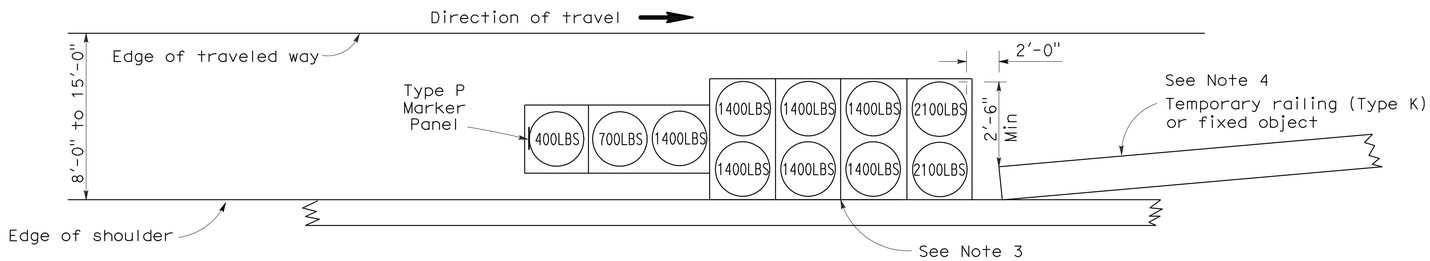

ARRAY 'TS11'

Approach speed less than 45 mph
See Note 9

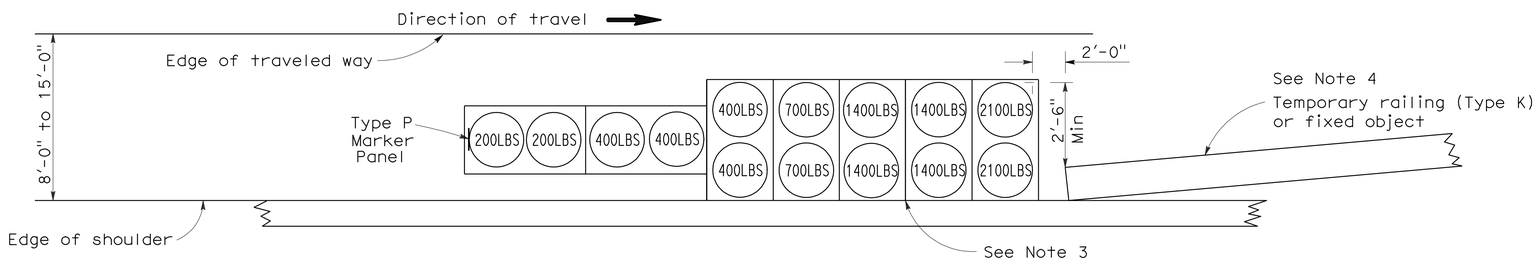

ARRAY 'TS14'

Approach speed 45 mph or more
See Note 9

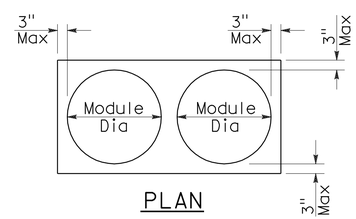

PLAN

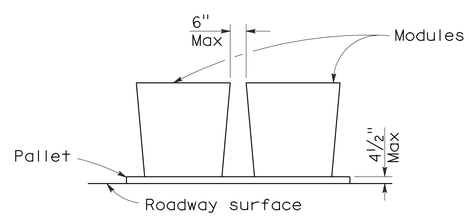

ELEVATION

CRASH CUSHION PALLET DETAIL

See Note 11

NOTES:

1. (XXX) Indicates sand filled module location and weight of sand in pounds for each module. Module spacing is based on the greater diameter of the module.
2. All sand weights are nominal.
3. The temporary crash cushion arrays shown on this plan shall be used only in locations where there will be traffic on one side of the temporary crash cushion array.
4. If the fixed object or approach end of the temporary railing is less than 15'-0" from the edge of traveled way, a temporary crash cushion is required in a construction or work zone.
5. Temporary crash cushion arrays shall not encroach on the traveled way.
6. Arrays for median shoulders shall conform to details shown on this plan for outside shoulders.
7. Place the Type P marker panel so that the bottom of the panel rests upon the pallet and faces traffic.
8. Refer to Standard Plan A73B for marker details.
9. For shoulder widths less than 8'-0", appropriate approved crash cushion protection, other than sand filled modules, shall be provided at fixed objects and at approach ends of temporary railing. The specific type of crash cushion shall be as shown on the project plans or as specified in the Special Provisions, or if not shown on the project plans or specified in the Special Provisions, shall be as approved by the Engineer.
10. Approach speeds indicated conform to NCHRP 350 Report criteria.
11. Use of pallets is optional.

STATE OF CALIFORNIA
DEPARTMENT OF TRANSPORTATION

TEMPORARY CRASH CUSHION, SAND FILLED (SHOULDER INSTALLATIONS)

NO SCALE

RSP T2 DATED JUNE 6, 2008 SUPERSEDES STANDARD PLAN T2
DATED MAY 1, 2006 - PAGE 213 OF THE STANDARD PLANS BOOK DATED MAY 2006.

REVISED STANDARD PLAN RSP T2

2006 REVISED STANDARD PLAN RSP T2

5-15-08

DIST	COUNTY	ROUTE	POST MILES TOTAL PROJECT	SHEET NO.	TOTAL SHEETS
12	Ora	39	3.6	35	45

LICENSED LANDSCAPE ARCHITECT

August 15, 2008
PLANS APPROVAL DATE

The State of California or its officers or agents shall not be responsible for the accuracy or completeness of electronic copies of this plan sheet.

LICENSED LANDSCAPE ARCHITECT — Robert B. Schott — Signature — 11-04-08 Renewal Date — 08-11-08 Date — STATE OF CALIFORNIA

To accompany plans dated 12-21-09

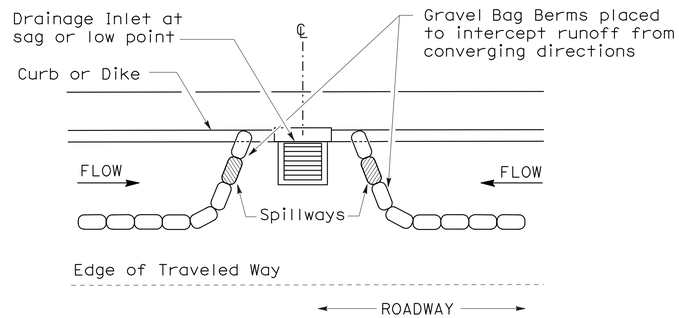

PLAN

CONFIGURATION FOR SAG POINT INLET (GRAVEL BAG BERM)

GRAVEL BAG BERM (TYPE 3A) SPACING TABLE

SLOPE OF ROADWAY (PERCENT)	1 to 3.9	4 to 5.9	6 to 7.9	8 to 10	10+
INTERVAL BETWEEN BERM	100′	75′	50′	25′	12′

For slope of less than 1%, install barriers only if erosion/sediment is prevalent

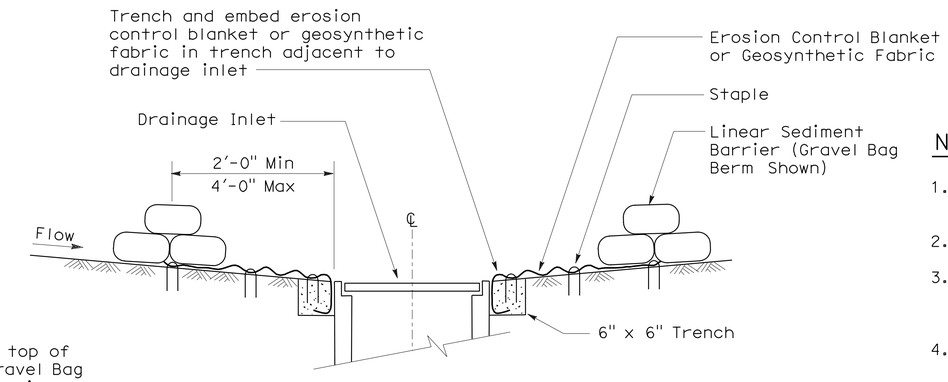

SECTION A-A

NOTES:

1. Place safety cones adjacent to drainage inlet protection.
2. Dimensions may vary to fit field conditions.
3. Install a minimum of 3 gravel bag berms upstream of each drainage inlet to be protected.
4. Position erosion control blanket or geosynthetic fabric at edge of concrete apron and secure in trench.
5. Erosion control blanket or geosynthetic fabric is not required if the area adjacent to the drainage inlet is vegetated or paved.

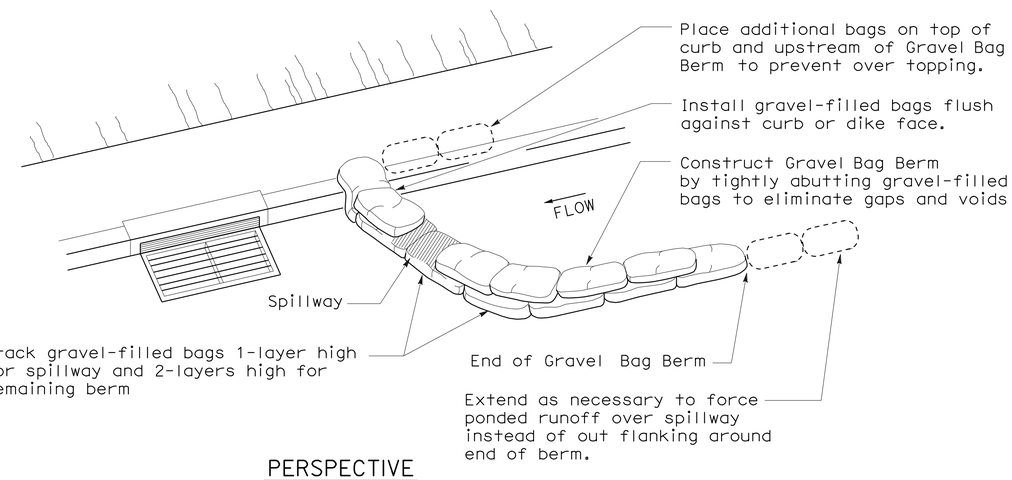

PERSPECTIVE

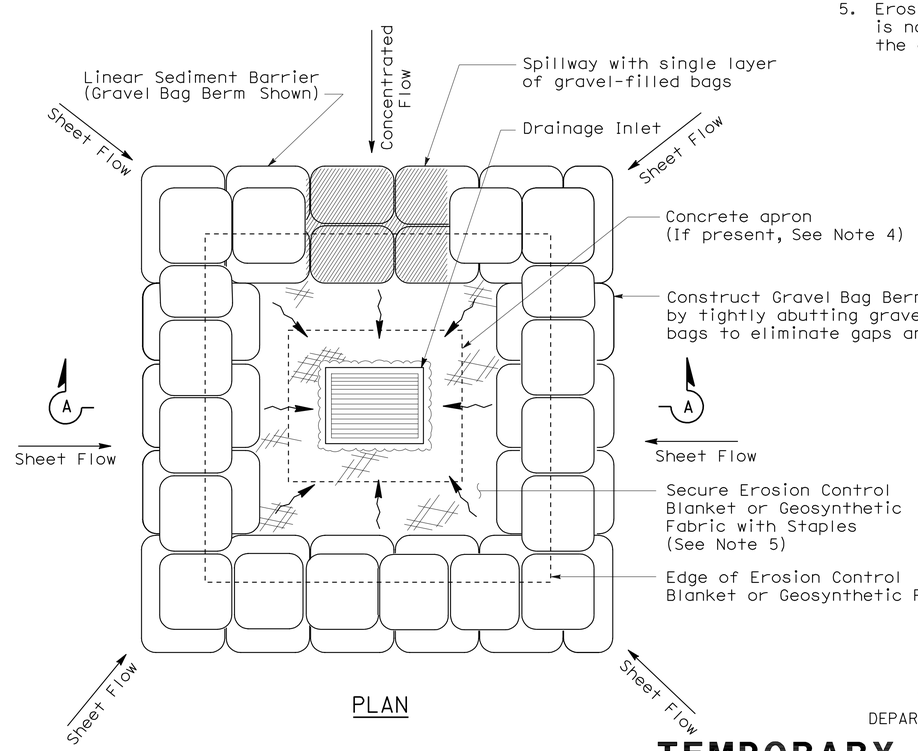

PLAN

TEMPORARY DRAINAGE INLET PROTECTION (TYPE 3B)

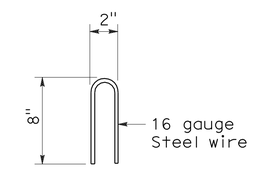

STAPLE DETAIL

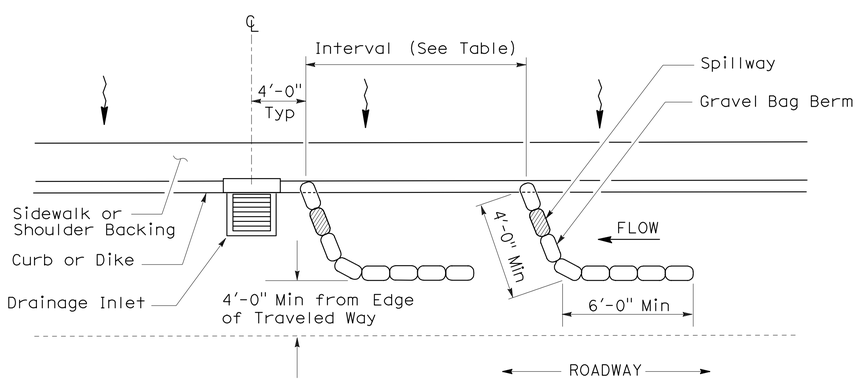

PLAN

TEMPORARY DRAINAGE INLET PROTECTION (TYPE 3A) (GRAVEL BAG BERM)

STATE OF CALIFORNIA
DEPARTMENT OF TRANSPORTATION

TEMPORARY WATER POLLUTION CONTROL DETAILS (TEMPORARY DRAINAGE INLET PROTECTION)

NO SCALE

NSP T62 DATED AUGUST 15, 2008 SUPPLEMENTS THE STANDARD PLANS BOOK DATED MAY 2006.

NEW STANDARD PLAN NSP T62

2006 NEW STANDARD PLAN NSP T62

7-11-08

DIST	COUNTY	ROUTE	POST MILES TOTAL PROJECT	SHEET NO.	TOTAL SHEETS
12	Ora	39	3.6	36	45

REGISTERED ELECTRICAL ENGINEER

October 5, 2007
PLANS APPROVAL DATE

REGISTERED PROFESSIONAL ENGINEER Jeffery G. McRae No. E14512 Exp. 6-30-08 ELECTRICAL STATE OF CALIFORNIA

The State of California or its officers or agents shall not be responsible for the accuracy or completeness of electronic copies of this plan sheet.

To accompany plans dated 12-21-09

ELECTROLIERS

STANDARD TYPES
15, 15D
15 STRUCTURE
21, 21D STRUCTURE
30
31
32
35
36-20A

High mast light pole

Double Arm lighting standard

Existing electrolier

Electrolier foundation (Future installation)

NOTES:

1. Luminaires shall be 310 W HPS when installed on Type 21, 21D, 30, 31, 32, 35 and 36-20A Standards, unless otherwise specified. Luminaires shall be 200 W HPS when installed on other type standards or poles, unless otherwise specified.
2. Luminaires shall be the cutoff type, ANSI Type III medium cutoff lighting distribution, unless otherwise specified.
3. Variations noted adjacent to symbol on project plans.

Electrolier (see project notes or project plans)

Luminaire on wood pole

STANDARD NOTES:

- AB — Abandon. If applied to conduit, remove conductors.
- BC — Install pull box in existing conduit run.
- BP — Pedestrian barricade, type as indicated on plan.
- CB — Install conduit into existing pull box.
- CC — Connect new and existing conduit. Remove existing conductors and install conductors as indicated.
- CF — Conduit to remain for future use. Remove conductors. Install pull wire or rope.
- DH — Detector handhole.
- FA — Foundation to be abandoned.
- IS — Install sign on signal mast arm.
- NS — No slip base on standard.
- PEC — Photoelectric control.
- PEU — Photoelectric unit.
- RC — Equipment or material to be removed and become the property of the Contractor.
- RE — Remove electrolier, fuses and ballast. Tape ends of conductors.
- RL — Relocate equipment.
- RR — Remove and reuse equipment.
- RS — Remove and salvage equipment.
- SC — Splice new to existing conductors.
- SD — Service disconnect.
- SF — Standard to remain for future use. Remove luminaire, pole conductors, fuses and ballast.
- TSP — Telephone service point.

ABBREVIATIONS AND EQUIPMENT DESIGNATIONS

PROPOSED	EXISTING	
BBS	bbs	Battery backup system
BC	bc	Bolt circle
C	C	Conduit
CCTV	cctv	Closed circuit television
CKT	ckt	Circuit
CMS	cms	Changeable message sign
DLC	dlc	Loop detector lead-in cable
EMS	ems	Extinguishable message sign
EVC	evc	Emergency vehicle cable
EVD	evd	Emergency vehicle detector
FB	fb	Flashing beacon
FBCA	fbca	Flashing beacon control assembly
FBS	fbs	Flashing beacon with slip base
FO	fo	Fiber optic
G	G	Ground (Equipment Grounding Conductor)
GFCI	GFCI	Ground fault circuit interrupt
HAR	har	Highway advisory radio
HEX	hex	Hexagonal
HPS	hps	High pressure sodium
IISNS	iisns	Internally illuminated street name sign
ISL	isl	Induction sign lighting
LED	led	Light emitting diode
LMA	lma	Luminaire mast arm
LPS	lps	Low pressure sodium
LTG	ltg	Lighting
LUM	lum	Luminaire
MAT	mat	Mast arm mounting vehicle signal faces, top attachment
MAS	mas	Mast arm mounting vehicle signal faces, side attachment
MAS-4A	mas-4A	Mast arm mounting vehicle signal faces, side attachment - 4 signal section
MAS-4B	mas-4B	
MAS-4C	mas-4C	
MAS-5A	mas-5A	Mast arm mounting vehicle signal faces, side attachment - 5 signal section
MAS-5B	mas-5B	
MC	mc	Mercury contactor
M/M	m/m	Multiple to multiple transformer
MT	mt	Conduit with pull wire or rope only
MTG	mtg	Mounting
	mv	Mercury vapor lighting fixture
N	N	Neutral (Grounded Conductor)
NC	NC	Normally closed
NO	NO	Normally open
PB	pb	Pull box
PEC	pec	Photoelectric control (Type I, II, III, IV or V as shown)
PED	ped	Pedestrian
PEU	peu	Photoelectric unit
PPB	ppb	Pedestrian push button
RL		Relocated equipment
RM	rm	Ramp metering
SB	sb	Slip base
SIC	sic	Signal interconnect cable
SIG	sig	Signal
SMA	sma	Signal mast arm
SNS	sns	Street name sign
SP	sp	Service point
TDC	tdc	Telephone demarcation cabinet
TMS	tms	Traffic monitoring station
TOS	tos	Traffic Operations System
VEH	veh	Vehicle
XFMR	xfmr	Transformer
COMM	comm	Communication
RWIS	rwis	Roadway weather information system

SOFFIT AND WALL MOUNTED LUMINAIRES

Pendant, 70 W HPS unless otherwise specified.

Flush, 70 W HPS unless otherwise specified.

Wall surface, 70 W HPS unless otherwise specified.

Existing soffit or wall luminaire to remain unmodified.

Existing soffit or wall luminaire to be modified as specified.

NOTE:

Arrow indicates "street side" of luminaire.

STATE OF CALIFORNIA
DEPARTMENT OF TRANSPORTATION

ELECTRICAL SYSTEMS (SYMBOLS AND ABBREVIATIONS)

NO SCALE

RSP ES-1A DATED OCTOBER 5, 2007 SUPERSEDES STANDARD PLAN ES-1A DATED MAY 1, 2006 - PAGE 400 OF THE STANDARD PLANS BOOK DATED MAY 2006.

REVISED STANDARD PLAN RSP ES-1A

2006 REVISED STANDARD PLAN RSP ES-1A

DIST	COUNTY	ROUTE	POST MILES TOTAL PROJECT	SHEET NO.	TOTAL SHEETS
12	Ora	39	3.6	37	45

REGISTERED ELECTRICAL ENGINEER

October 5, 2007
PLANS APPROVAL DATE

REGISTERED PROFESSIONAL ENGINEER Jeffery G. McRae No. E14512 Exp. 6-30-08 ELECTRICAL STATE OF CALIFORNIA

The State of California or its officers or agents shall not be responsible for the accuracy or completeness of electronic copies of this plan sheet.

To accompany plans dated 12-21-09

CONDUIT

PROPOSED	EXISTING	
		Lighting Conduit, unless otherwise indicated or noted
		Traffic signal conduit
C	c	Communication conduit
T	t	Telephone conduit
F	f	Fire alarm conduit
FO	fo	Fiber optic conduit
		Conduit termination (RSP ES-9A C)
R	r	Conduit riser in/on structure or service pole

SERVICE EQUIPMENT

PROPOSED	EXISTING	
OH	oh	Overhead lines
U	U	Wood pole "U" indicates utility owned
		Pole guy with anchor
		Utility transformer - ground mounted
III		Service equipment enclosure type
		Service equipment enclosure door indicates front of enclosure
T	t	Telephone demarcation cabinet

POLE-MOUNTED SERVICE DESIGNATION

Type of installation

TYPE H SERVICE - 28'-10" ← Pole height above grade

ILLUMINATED OVERHEAD SIGN

PROPOSED	EXISTING	
		Overhead sign - Single post
		Overhead sign - Two post
		Overhead sign - Mounted on structure
		Overhead sign with electrolier

SIGNAL EQUIPMENT

PROPOSED	EXISTING	
		Pedestrian signal face
		Pedestrian push button post
		Pedestrian barricade
		Vehicle signal face (with backplate, 3-Section: red, yellow and green)
		Vehicle signal face with angle visors
PV	PV	Modifications of basic symbols: "L" indicates all non-arrow sections louvered "LG" indicates louvered green section only "PV" indicates 12" programmed visibility sections "8" indicates all 8" sections (only when specified)
		Type 15TS and Vehicle signal face
		Vehicle signal face with red, yellow and green left arrow sections
		Vehicle signal face with red and yellow sections and up green arrow
		Vehicle signal face (5 Section) with red, yellow and green sections and yellow and green right arrows
		Type 1 Standard and attached vehicle signal faces
		Standard with signal mast arm only and attached vehicle signal faces and internally illuminated street name sign
		Type 33 Standard, Left-turn vehicle signal face and sign
		Standard with luminaire and signal mast arms and attached vehicle signal faces
		Cantilever flashing beacon Type 9 Frame, with a sign unless otherwise specified or indicated
		Type 15-FBS Standard with two vehicle signal face sections with lens, backplate and visor with a sign
R	Y	Flashing beacon. One vehicle signal face section with lens, backplate and visor. "R" indicates red indication, "Y" indicates yellow indication
		Controller assembly. Door indicates front of cabinet

SIGNAL EQUIPMENT Cont

PROPOSED	EXISTING	
		Guard post
		Type 1 Standard with "Meter On" sign
		Emergency Vehicle detector

NOTES:

1. All signal sections shall be 12" unless shown otherwise.
2. Signal heads shall be provided with backplates unless shown otherwise.
3. Signal indication shall be LED.

STATE OF CALIFORNIA
DEPARTMENT OF TRANSPORTATION

ELECTRICAL SYSTEMS (SYMBOLS AND ABBREVIATIONS)

NO SCALE

RSP ES-1B DATED OCTOBER 5, 2007 SUPERCEDES STANDARD PLAN ES-1B DATED MAY 1, 2006 - PAGE 401 OF THE STANDARD PLANS BOOK DATED MAY 2006.

REVISED STANDARD PLAN RSP ES-1B

2006 REVISED STANDARD PLAN RSP ES-1B

7-10-07

DIST	COUNTY	ROUTE	POST MILES TOTAL PROJECT	SHEET NO.	TOTAL SHEETS
12	Ora	39	3.6	38	45

REGISTERED ELECTRICAL ENGINEER

October 5, 2007
PLANS APPROVAL DATE

REGISTERED PROFESSIONAL ENGINEER Jeffery G. McRae No. E14512 Exp. 6-30-08 ELECTRICAL STATE OF CALIFORNIA

The State of California or its officers or agents shall not be responsible for the accuracy or completeness of electronic copies of this plan sheet.

To accompany plans dated 12-21-09

EQUIPMENT IDENTIFICATION

ILLUMINATED SIGN IDENTIFICATION NUMBER:

Sign No. 12345 — Sign number - Place on post or structure

10 ISL SCI 1.0

- 1.0 — Transformer rating (kVA)
- SCI — Lighting control type
- ISL — Number and type of fixtures

Do NOT place on standard or structure

ELECTROLIER OR EQUIPMENT IDENTIFICATION NUMBER:

12345 - 15'-0"

- 15'-0" — Mast arm length, if shown. Do not place on standard or structure.
- 12345 — Equipment number - Place on standard or structure. Existing equipment numbers are shown in parenthesis

CONDUIT AND CONDUCTOR IDENTIFICATION:

1½"C, 2#10, 15#14, 2 DLC

- 2#10, 15#14, 2 DLC — Number and size of conductors and cables
- 1½"C — Size of conduit in inches

Ø1, Ø2, Ø2P, etc.	Traffic phase identification for signal faces, detectors and phase diagrams
1 2 3	Project note numbers
A B C	Equipment description, installation or item numbers
1 2 3	Conduit run numbers

SIGNAL AND LIGHTING STANDARD (TYPICAL DESIGNATION):

19A - 3 - 100

- 100 — Wind velocity = 100 mph
- 3 — Case 3 arm loading
- 19A — Standard type
- Standard Plan sheet number
- Detail number or letter

MISCELLANEOUS EQUIPMENT

PROPOSED	EXISTING	
CMS	cms	Changeable message sign
		Closed circuit television camera
		Highway advisory radio pole and antenna
EMS	ems	Extinguishable message sign
M V	m v	Detection device M = Microwave sensor V = Video image sensor

WIRING DIAGRAM LEGEND

P	Pole
CB	Circuit breaker
A	Ampere
V	Volt
M	Metered
UM	Unmetered
NB	Neutral bus
GB	Ground bus
G	Equipment grounding conductor
N	Grounded conductor (Neutral)

- External conductor
- Conductor or bus
- Tie point
- Contactor coil
- Contactor, Contact NO
- Terminal blocks
- Contactor, Contact NC
- Enclosure bond
- Grounding electrode
- Circuit breaker
- Receptacle

PULL BOXES

PROPOSED	EXISTING	
		Pull box-No. 5 unless otherwise indicated or noted.
3	9A(21)	Pull box-Additional designations or descriptions

3 = No. 3½ pull box
5 = No. 5 pull box
6 = No. 6 pull box
7 = No. 7 (Ceiling pull box)
8 = No. 8 (Pendant soffit pull box)
9 = No. 9 pull box
9A = No. 9A pull box

(C) = Communications pull box
(E) = Pull box with extension
(S) = Sprinkler control pull box
(21) = Anchor bolts and conduit for future installation of Type 21 Standard
(T) = Traffic pull box

VEHICLE DETECTORS

5 J 9 U

- U = Upper
- L = Lower
- Slot number in input file
- Input file (I or J)
- Phase

PROPOSED	EXISTING	
		Type A detector loop. Outline of sawcut shown.
		Type B detector loop. Outline of sawcut shown.
		Type C detector loop. Outline of sawcut shown.
		Type D detector loop. Outline of sawcut shown.
		Type E detector loop. Outline of sawcut shown.
		Type Q detector loop. Outline of sawcut shown.
		Magnetic detector
DH	dh	Detector handhole
		Microwave or video detection zone

STATE OF CALIFORNIA
DEPARTMENT OF TRANSPORTATION

ELECTRICAL SYSTEMS (SYMBOLS AND ABBREVIATIONS)

NO SCALE

RSP ES-1C DATED OCTOBER 5, 2007 SUPERCEDES STANDARD PLAN ES-1C DATED MAY 1, 2006 - PAGE 402 OF THE STANDARD PLANS BOOK DATED MAY 2006.

REVISED STANDARD PLAN RSP ES-1C

2006 REVISED STANDARD PLAN RSP ES-1C

DIST	COUNTY	ROUTE	POST MILES TOTAL PROJECT	SHEET NO.	TOTAL SHEETS
12	Ora	39	3.6	39	45

REGISTERED ELECTRICAL ENGINEER

October 5, 2007
PLANS APPROVAL DATE

REGISTERED PROFESSIONAL ENGINEER
Jeffery G. McRae
No. E14512
Exp. 6-30-08
ELECTRICAL
STATE OF CALIFORNIA

The State of California or its officers or agents shall not be responsible for the accuracy or completeness of electronic copies of this plan sheet.

To accompany plans dated 12-21-09

2006 REVISED STANDARD PLAN RSP ES-2C

NOTES-TYPE III SERVICE EQUIPMENT ENCLOSURES:

1. Service equipment enclosure and metering equipment shall meet the requirements of the service utility. The meter area shall have a sealable, lockable, weathertight cover that can be removed without the use of tools.

2. Service equipment enclosures shall be factory wired and conform to NEMA standards.

3. Dimensions of service equipment enclosures shall meet the requirements of the service utility.

4. The dead front panels on Type III service equipment enclosures shall have a continuous stainless steel or aluminum piano hinge. The panel in front of the breakers shall be secured with a latch or captive screws. No live parts shall be mounted on the dead front panel.

5. The exterior door shall have provisions for padlocking. The padlock hole shall be a minimum diameter of 7/16".

6. Enclosures housing transformers of more than one kVA shall have effective screened ventilation louver of not less than 50 square inches. Screen shall be stainless steel No. 304, with a No. 10 size mesh. Framed screen shall be secured with at least four bolts.

7. Fasteners on the exterior of the enclosure shall be vandal-resistant and shall not be removable from the exterior. Exterior screws, nuts, bolts and washers shall be stainless steel.

8. Landing lugs for incoming service conductors shall be compatible with either copper or aluminum conductors sized to suit the conductors shown on the plan. Landing lugs shall be copper or tin-plated aluminum. Neutral bus shall be rated for 125 A and be suitable for copper or aluminum conductors unless otherwise specified. The terminal shall include but not be limited to:

   a) Incoming terminals (landing lugs)
   b) Neutral lugs
   c) Solid neutral terminal strip

9. At least 6 standard single pole circuit breaker spaces, 3/4" nominal, shall be provided for branch circuits. Circuit breaker interiors shall be copper. Interiors of enclosure shall accept plug-in or cable-in/cable-out circuit breakers.

10. Control wiring shall be 600 V, 14 stranded machine tool wire. Where subject to flexing, 19 strand wire shall be used.

11. Main bus shall be rated for 125 A and shall be tin-plated copper.

12. A plastic laminated wiring diagram shall be provided with brass mounting eyelets and attached to the inside of the enclosure and the wiring diagram shall be affixed to the interior with a UL or ETL approved method.

13. An engraved phenolic nameplate on the dead front panel indicating the function of each circuit or device shall be installed with stainless steel rivets or stainless steel screws:

    a) Adjacent to the breaker or device with character size a minimum of 1/8".

    b) At the top of the exterior door panel indicating State system number, voltage level and number of phases with character size a minimum of 3/16".

14. The plan shows the approximate location of devices within the enclosure. Components may be rearranged, however, the "working" clearances within the service equipment enclosure shall be maintained.

15. In unpaved areas a raised portland cement concrete pad 2'-0" x 4" x width of foundation shall be constructed in front of new service equipment enclosure installation. Pad shall be set to elevation of foundation.

16. Foundation shall extend 2" minimum beyond edge of service equipment enclosure.

17. Internal bus, where shown, is typical only. Alternative design of proposed service equipment enclosure shall be submitted to the Engineer for approval.

18. Plug-in circuit breakers may be mounted in the vertical or horizontal position. Cable-in/cable-out circuit breakers shall be mounted in the vertical position.

19. Type III-AF and Type III-BF service equipment enclosures shall have the meter viewing windows located on the front side of the service equipment enclosures.

20. Type III-AR and Type III-BR service equipment enclosures shall be similarly constructed as Type III-AF and Type III-BF respectively, except the meter viewing windows shall be located on the back side of the service equipment enclosures.

21. Minimum clearance shall be required for front and back of service equipment enclosure per National Electrical Code, Article 110.26, "Spaces About Electric Equipment (600 Volts, Nominal, or Less)."

STATE OF CALIFORNIA
DEPARTMENT OF TRANSPORTATION

ELECTRICAL SYSTEMS (SERVICE EQUIPMENT NOTES TYPE III SERIES)

NO SCALE

RSP ES-2C DATED OCTOBER 5, 2007 SUPERCEDES STANDARD PLAN ES-2C
DATED MAY 1, 2006 - PAGE 405 OF THE STANDARD PLANS BOOK DATED MAY 2006.

REVISED STANDARD PLAN RSP ES-2C

DIST	COUNTY	ROUTE	POST MILES TOTAL PROJECT	SHEET NO.	TOTAL SHEETS
12	Ora	39	3.6	40	45

REGISTERED ELECTRICAL ENGINEER

June 6, 2008
PLANS APPROVAL DATE

REGISTERED PROFESSIONAL ENGINEER Jeffery G. McRae No. E14512 Exp. 6-30-10 ELECTRICAL STATE OF CALIFORNIA

The State of California or its officers or agents shall not be responsible for the accuracy or completeness of electronic copies of this plan sheet.

To accompany plans dated 12-21-09

VISORS

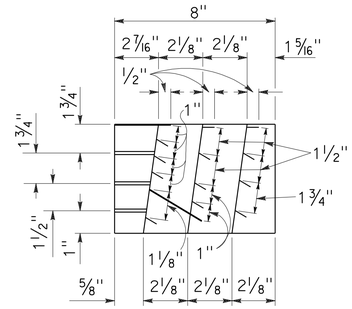

SECTION A-A

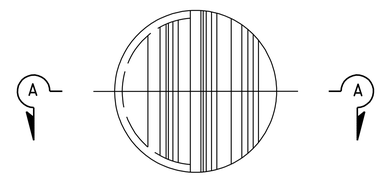

FRONT VIEW

DIRECTIONAL LOUVER

Directional louvers shall be oriented as directed by the Engineer and secured in place with one plated brass machine screw and nut.

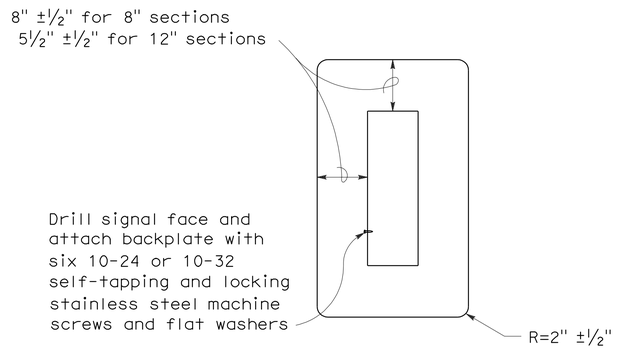

8" AND 12" SECTIONS

BACKPLATE

1/16" minimum thickness
3001-14 aluminum, or plastic when specified

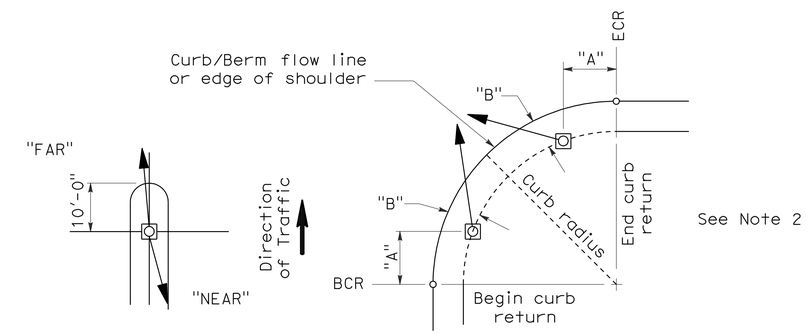

NOTES:

1. Typical signal pole placement unless dimensioned on plans.
2. For "A" and "B" dimensions, see Pole Schedule, or as directed by the Engineer.

SIGNAL STANDARD PLACEMENT DIMENSIONS AND EQUIPMENT LOCATIONS

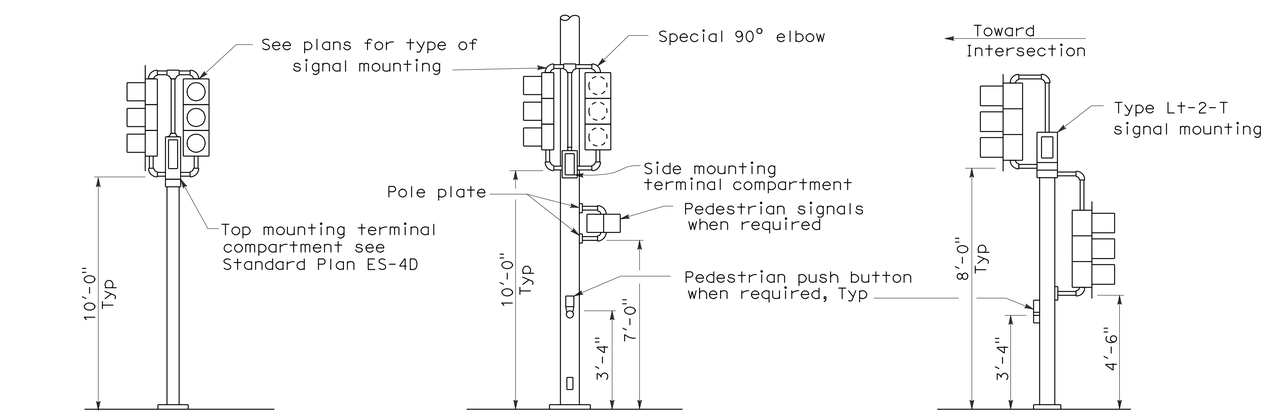

TOP MOUNTED SIGNALS (TV)

Type 1-A, 1-B, 1-C and 1-D standard as indicated on the plans

SIDE MOUNTED SIGNALS (SV AND SP)

Normally used on standards with luminaire or signal mast arm

LEFT TURN LANE SIGNAL

Type 1-A, 1-B, 1-C and 1-D standard as indicated on plans

TYPICAL SIGNAL INSTALLATIONS

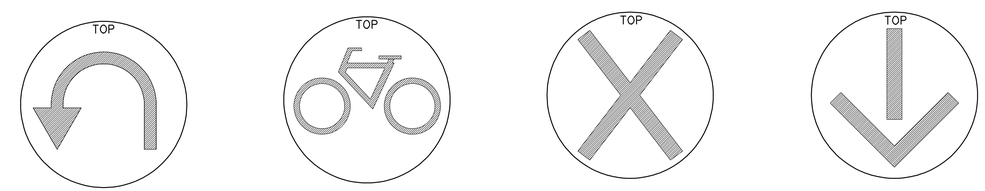

U-TURN SIGNAL FACE | BICYCLE SIGNAL FACE | LANE CONTROL SIGNAL FACE | LANE CONTROL SIGNAL FACE

STATE OF CALIFORNIA
DEPARTMENT OF TRANSPORTATION

ELECTRICAL SYSTEMS (SIGNAL HEADS AND MOUNTINGS)

NO SCALE

RSP ES-4C DATED JUNE 6, 2008 SUPERSEDES STANDARD PLAN ES-4C DATED MAY 1, 2006 - PAGE 420 OF THE STANDARD PLANS BOOK DATED MAY 2006.

REVISED STANDARD PLAN RSP ES-4C

2006 REVISED STANDARD PLAN RSP ES-4C

5-19-08

DIST	COUNTY	ROUTE	POST MILES TOTAL PROJECT	SHEET NO.	TOTAL SHEETS
12	Ora	39	3.6	41	45

REGISTERED ELECTRICAL ENGINEER

June 6, 2008
PLANS APPROVAL DATE

REGISTERED PROFESSIONAL ENGINEER Jeffery G. McRae No. E14512 Exp. 6-30-10 ELECTRICAL STATE OF CALIFORNIA

The State of California or its officers or agents shall not be responsible for the accuracy or completeness of electronic copies of this plan sheet.

To accompany plans dated 12-21-09

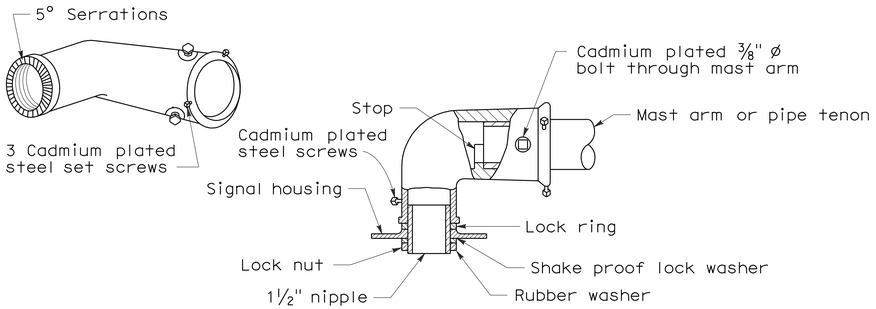

MAST ARM MOUNTING - TYPE "MAT"

For 2 NPS pipe, see Note 1.

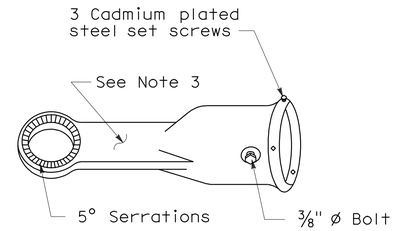

MAST ARM MOUNTING - TYPE "MAS"

For 2 NPS pipe. See Note 1.

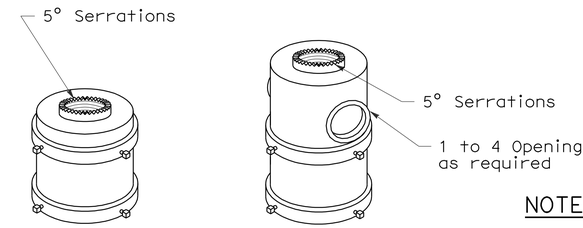

For one mounting For mulitiple mountings

TOP MOUNTINGS

For 4 NPS pipe, see Note 2.

SIGNAL SLIP FITTERS

NOTES:

1. After mast arm signal has been plumbed and secured, drill 7/16" hole through mast arm tenon in line with slip fitter hole. Place a cadmium plated 3/8" ø galvanized bolt with washer under bolt head through hole and secure with washer, nut, and locknut. Seal openings between mast arm mountings and mast arm with mastic.
2. (a) Threaded top mounted slip fitter openings shall be 1 1/2 NPS.
   (b) Serrations in fittings shall match those on bottom of signal heads or in lock ring.
   (c) Top opening shall be offset when backplate is used.
3. Wireway shall have a cross section area of 0.95 square inch minimum. Minimum width of 1/2".

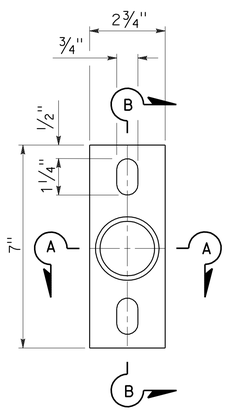

POLE PLATE

For side mountings

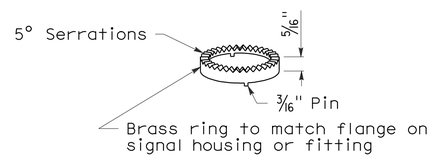

LOCK RING

Use where locking ring is not integral with signal housing or fitting.

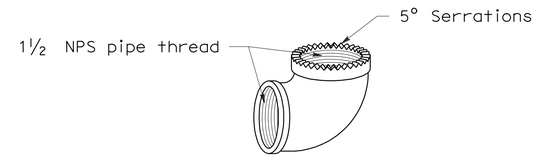

SPECIAL 90° ELBOW

One for each signal head, except those with special slip fitter mounting

MISCELLANEOUS MOUNTING HARDWARE

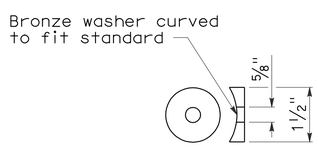

DETAIL "C"

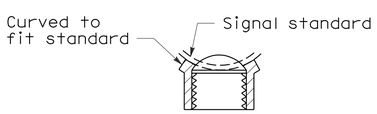

SECTION A-A

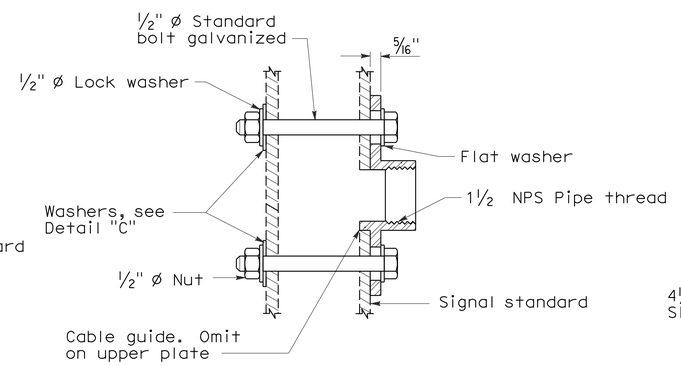

SECTION B-B

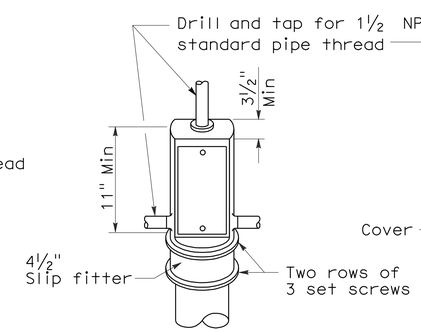

TOP MOUNTING

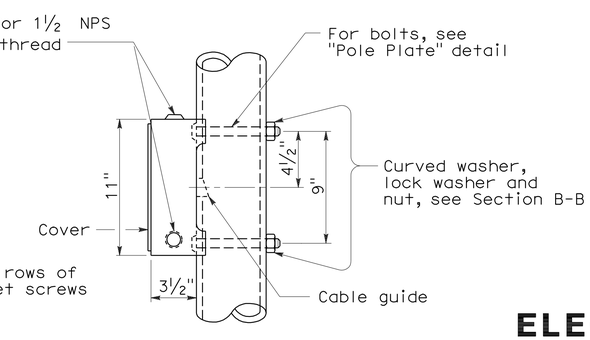

SIDE MOUNTING

TERMINAL COMPARTMENTS

STATE OF CALIFORNIA
DEPARTMENT OF TRANSPORTATION

ELECTRICAL SYSTEMS (SIGNAL HEADS AND MOUNTINGS)

NO SCALE

RSP ES-4D DATED June 6, 2008 SUPERSEDES STANDARD PLAN ES-4D
DATED MAY 1, 2006 - PAGE 421 OF THE STANDARD PLANS BOOK DATED MAY 2006.

REVISED STANDARD PLAN RSP ES-4D

2006 REVISED STANDARD PLAN RSP ES-4D

5-19-08

DIST	COUNTY	ROUTE	POST MILES TOTAL PROJECT	SHEET NO.	TOTAL SHEETS
12	Ora	39	3.6	42	45

REGISTERED ELECTRICAL ENGINEER

October 5, 2007
PLANS APPROVAL DATE

REGISTERED PROFESSIONAL ENGINEER Jeffery G. McRae No. E14512 Exp. 6-30-08 ELECTRICAL STATE OF CALIFORNIA

The State of California or its officers or agents shall not be responsible for the accuracy or completeness of electronic copies of this plan sheet.

To accompany plans dated 12-21-09

LOOP INSTALLATION PROCEDURE

1. Loops shall be centered in lanes.
2. Saw slots in pavement for loop conductors as shown in details.
3. Distance between side of loop and a lead-in saw cut from adjacent detectors shall be 2'-0" minimum. Distance between lead-in saw cuts shall be 6" minimum.
4. Bottom of saw slot shall be smooth with no sharp edges.
5. Slots shall be washed until clean, blown out and thoroughly dried before installing loop conductors.
6. Adjacent loops on the same sensor unit channel shall be wound in opposite directions.
7. Identify and tag loop circuit pairs in the pull box with loop number, start (S) and finish (F) of conductor. Identify and tag lead-in-cable with sensor number and phase.
8. Install loop conductor in slot using a 3/16" to 1/4" thick wood paddle. Hold loop conductors with wood paddles (at the bottom of the sawed slot) during sealant placement.
9. No more than 2 twisted pairs shall be installed in one sawed slot.
10. Allow additional 5'-0" of slack length of conductor for the lead-in run to pull box.
11. The additional length of each conductor for each loop shall be twisted together into a pair (6 turns per 3'-4" minimum) before being placed in the slot and conduit leading to pull box.
12. Test each loop circuit for continuity, circuit resistance and insulation resistance at the pull box before filling slots.
13. Fill slots as shown in details.
14. Splice loop conductors to lead-in-cable. Splices shall be soldered.
15. End of lead-in-cable and Type 2 loop conductor shall be waterproofed prior to installing in conduit to prevent moisture from entering the cable.
16. Lead-in-cable shall not be spliced between the pull box and the controller cabinet terminals.
17. Test each loop circuit for continuity, circuit resistance and insulation resistance at the controller cabinet location.
18. Where loop conductors are not to be spliced to a lead-in-cable, the ends of the conductors shall be taped and waterproofed with electrical insulating coating.

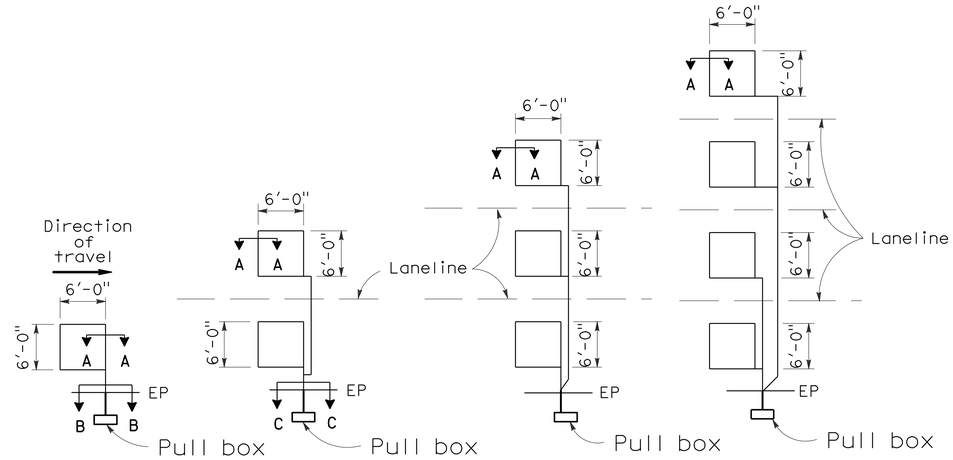

TYPE 1A INSTALLATION | TYPE 2A INSTALLATION | TYPE 3A INSTALLATION | TYPE 4A INSTALLATION

SAWCUT DETAILS

(Type A loop detector configurations illustrated)

1. 1A thru 4A = 1 Type A loop configuration in each lane.
2. 1B thru 4B = 1 Type B loop configuration in each lane.
3. 1C = 1 Type C loop configuration entering lanes as required.
4. 1D thru 4D = 1 Type D loop configuration in each lane.
5. 1E thru 4E = 1 Type E loop configuration in each lane.
6. 1Q thru 4Q = 1 Type Q loop configuration in each lane. (Use Type A, B, C, D, E or Q loop detector configurations only when specified or shown on plans)

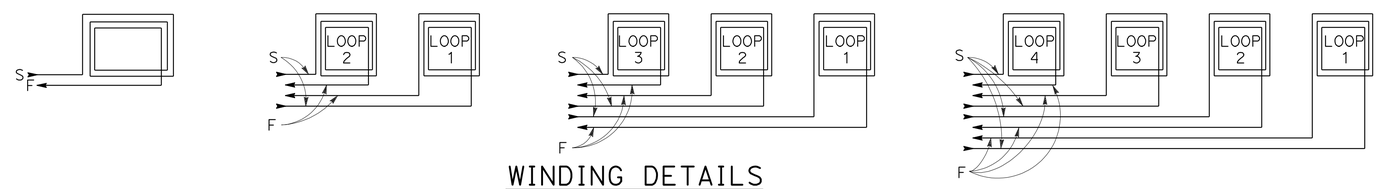

WINDING DETAILS

See Notes 6 and 7

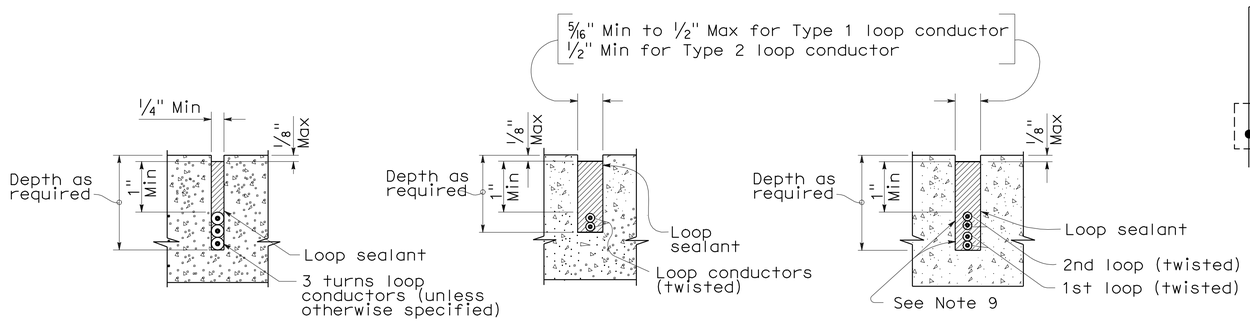

SECTION A-A | SECTION B-B | SECTION C-C

SLOT DETAILS - TYPE 1 AND TYPE 2 LOOP CONDUCTOR

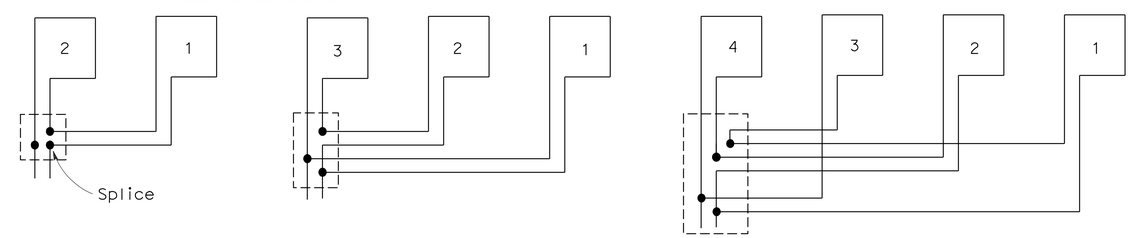

TYPICAL LOOP CONNECTIONS

(Dashed lines represent the pull box)

STATE OF CALIFORNIA
DEPARTMENT OF TRANSPORTATION

ELECTRICAL SYSTEMS (DETECTORS)

NO SCALE

RSP ES-5A DATED OCTOBER 5, 2007 SUPERCEDES STANDARD PLAN ES-5A DATED MAY 1, 2006 - PAGE 423 OF THE STANDARD PLANS BOOK DATED MAY 2006.

REVISED STANDARD PLAN RSP ES-5A

2006 REVISED STANDARD PLAN RSP ES-5A

8-17-07

DIST	COUNTY	ROUTE	POST MILES TOTAL PROJECT	SHEET NO.	TOTAL SHEETS
12	Ora	39	3.6	43	45

REGISTERED CIVIL ENGINEER

June 15, 2007
PLANS APPROVAL DATE

REGISTERED PROFESSIONAL ENGINEER Stanley P. Johnson No. C57793 Exp. 3-31-08 CIVIL STATE OF CALIFORNIA

The State of California or its officers or agents shall not be responsible for the accuracy or completeness of electronic copies of this plan sheet.

To accompany plans dated 12-21-09

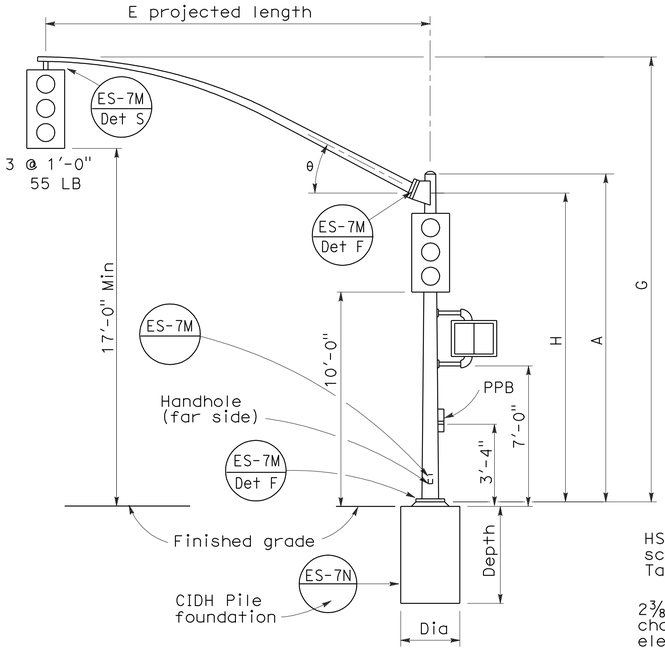

ELEVATION

TYPE 16-1-100, 18-1-100

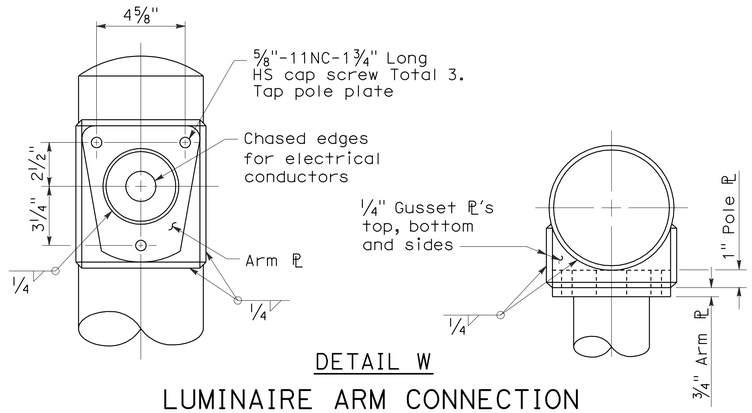

DETAIL W

LUMINAIRE ARM CONNECTION

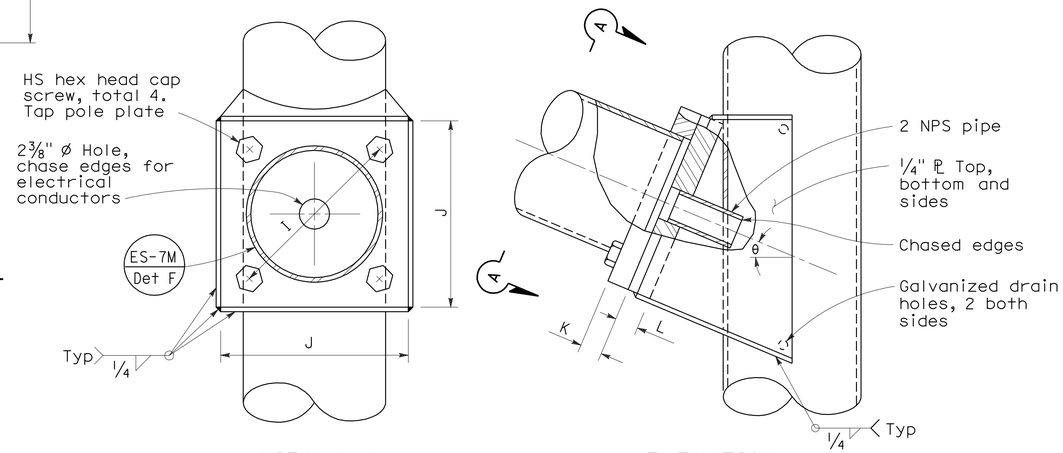

VIEW A-A ELEVATION

SIGNAL ARM CONNECTION DETAILS

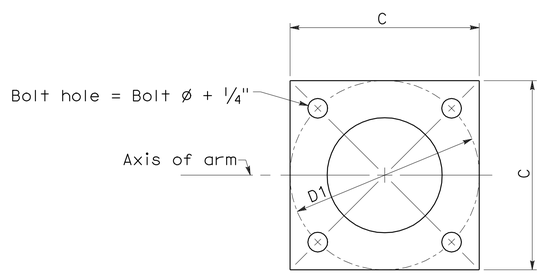

BASE PLATE

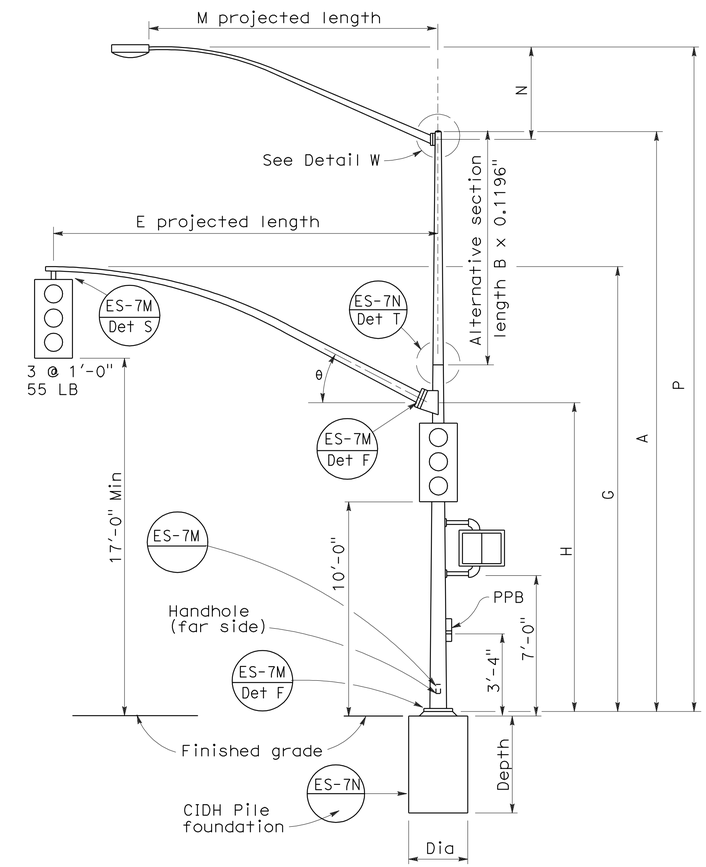

ELEVATION

TYPE 19-1-100, 19A-1-100

SIGNAL ARM DATA										
E Projected Length	G Mounting Height	H	Min OD At Pole	Thickness	I Bolt Circle	HS Cap Screws	J Plate size	K Arm ℙ Thickness	L Pole ℙ Thickness	θ
15'-0"	21'-8"±	17'-6"	7"	0.1196"	12"	1¼"-7NC-3"	1'-0"	1¼"	1½"	23°
20'-0"	21'-8"±		7⅛"							
25'-0"	22'-8"±	16'-0"	7 5/16"							
30'-0"	23'-0"±		8"							

LUMINAIRE ARM DATA					
M Projected Length	N Rise	Min OD at Pole	Thickness	P Mounting Height	
				30'-0" Pole	35'-0" Pole
6'-0"	2'-0"±	3¼"	0.1196"	31'-6"±	36'-6"±
8'-0"	2'-6"±	3½"		32'-0"±	37'-0"±
10'-0"	3'-3"±	3⅞"		32'-9"±	37'-9"±
12'-0"	4'-3"±			33'-9"±	38'-9"±
15'-0"	4'-9"±	4¼"		34'-3"±	39'-3"±

Pole Type	Load Case	Wind Velocity mph	POLE DATA							BASE PLATE DATA				Luminaire Arm	Signal Arm	CIDH PILE FOUNDATION		
			A Height	Min OD		Thickness	Alternative Section			C	D1 Bolt Circle	Thickness	Anchor Bolts			Diameter	Depth	Reinforced
				Base	Top		B Length	Bottom	Top				Size					
16-1-100	1	100	18'-6"	10¾"	8¼"	0.1793"	None			1'-6"	1'-5½"	1¼"	1½" Ø x 42" x 6"	None	15'-0", 20'-0"	2'-6"	7'-2"	Yes
18-1-100			17'-0"		8 7/16"		None							None				
19-1-100			30'-0"		6⅝"		10'-0"	8"	6⅝"					6'-15' [12'-0"]	25'-0", 30'-0"			
19A-1-100			35'-0"		5 15/16"		15'-0"		5 15/16"					6'-15' [15'-0"]				

☐ Indicates arm length to be used unless otherwise noted on plans.

STATE OF CALIFORNIA
DEPARTMENT OF TRANSPORTATION

ELECTRICAL SYSTEMS (SIGNAL AND LIGHTING STANDARD CASE 1 ARM LOADING WIND VELOCITY = 100 MPH ARM LENGTHS 15' TO 30')

NO SCALE

RSP ES-7C DATED JUNE 15, 2007 SUPERSEDES STANDARD PLAN ES-7C DATED MAY 1, 2006 - PAGE 439 OF THE STANDARD PLANS BOOK DATED MAY 2006.

REVISED STANDARD PLAN RSP ES-7C

2006 REVISED STANDARD PLAN RSP ES-7C

1-26-07

DIST	COUNTY	ROUTE	POST MILES TOTAL PROJECT	SHEET NO.	TOTAL SHEETS
12	Ora	39	3.6	44	45

REGISTERED CIVIL ENGINEER

October 5, 2007
PLANS APPROVAL DATE

REGISTERED PROFESSIONAL ENGINEER
Stanley P. Johnson
No. C57793
Exp. 3-31-08
CIVIL
STATE OF CALIFORNIA

The State of California or its officers or agents shall not be responsible for the accuracy or completeness of electronic copies of this plan sheet.

To accompany plans dated 12-21-09

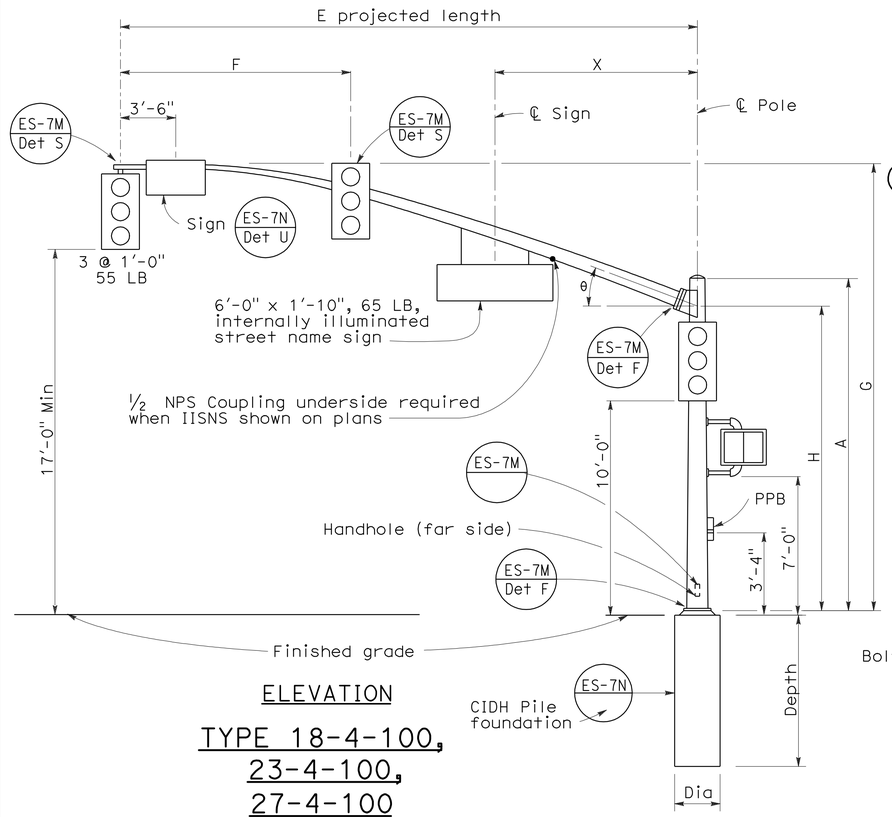

ELEVATION

TYPE 18-4-100,
23-4-100,
27-4-100

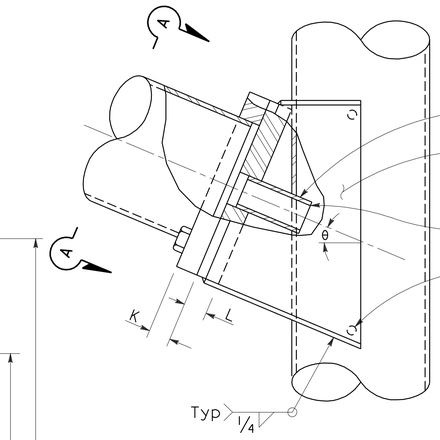

ELEVATION

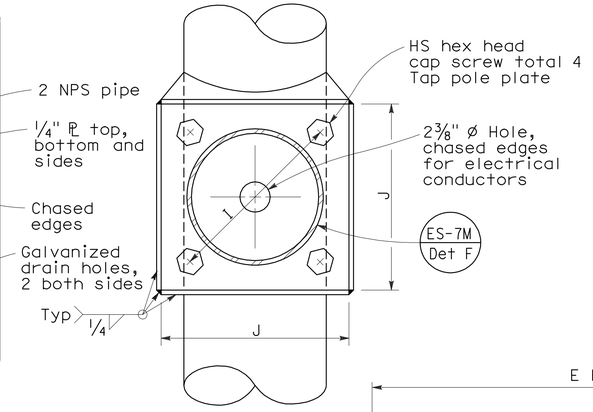

VIEW A-A

SIGNAL ARM CONNECTION DETAILS

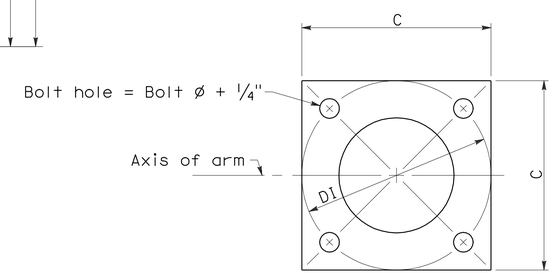

BASE PLATE

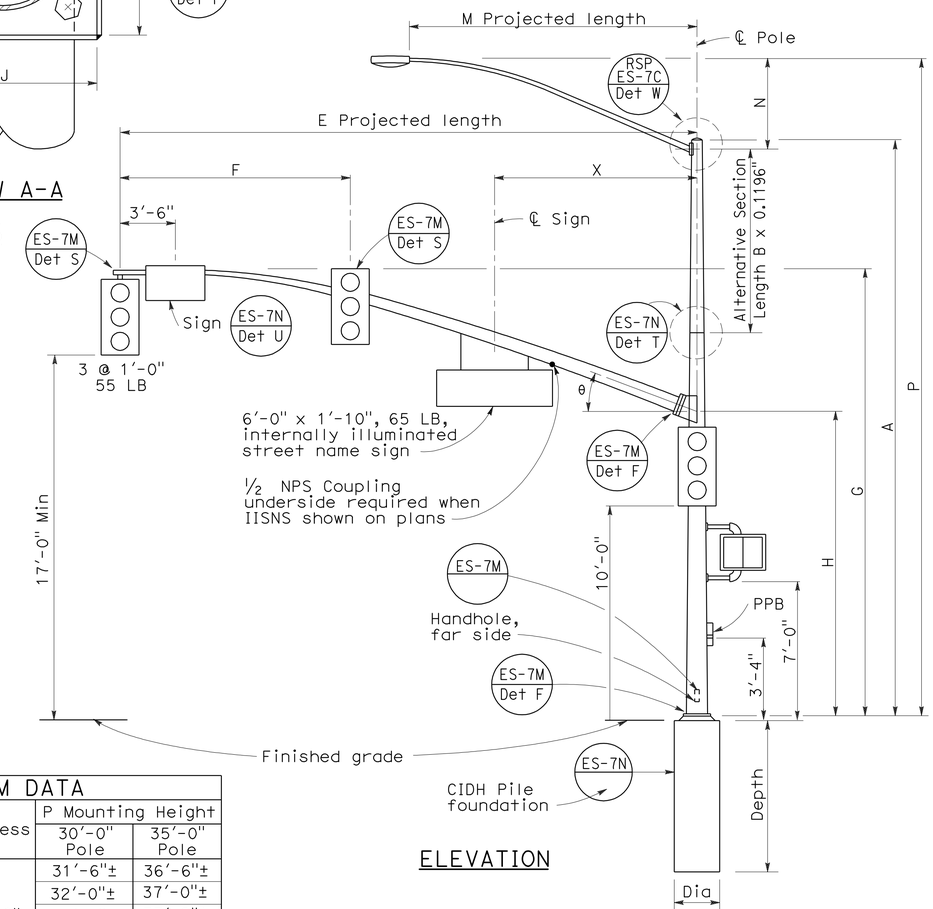

ELEVATION

TYPE 19-4-100, 19A-4-100,
24-4-100, 24A-4-100,
26-4-100, 26A-4-100

SIGNAL ARM DATA

E Projected Length	F Min Spacing	G Mounting Height	H	Min OD at Pole	Thickness	I Bolt Circle	HS Cap Screws	J Plate Size	K Arm ℙ Thickness	L Pole ℙ Thickness	θ	X Max
25'-0"	10'-0"	22'-8"±	16'-0"	7 5/16"	0.2391"	12"	1¼"-7NC-3"	1'-0"	1¼"	1½"	23°	10'-6"
30'-0"	12'-0"	23'-0"±		8"								
35'-0"	14'-0"			8 11/16"		13½"		1'-1½"	1½"	1¾"	21°	13'-0"
40'-0"	15'-0"			9⅜"							15°	
45'-0"		23'-8"±		10¼"								

LUMINAIRE ARM DATA

M Projected Length	N Rise	Min OD at Pole	Thickness	P Mounting Height 30'-0" Pole	P Mounting Height 35'-0" Pole
6'-0"	2'-0"±	3¼"	0.1196"	31'-6"±	36'-6"±
8'-0"	2'-6"±	3½"		32'-0"±	37'-0"±
10'-0"	3'-3"±	3⅞"		32'-9"±	37'-9"±
12'-0"	4'-3"±			33'-9"±	38'-9"±
15'-0"	4'-9"±	4¼"		34'-3"±	39'-3"±

POLE DATA / BASE PLATE DATA / CIDH PILE FOUNDATION

Pole Type	Load Case	Wind Velocity mph	A Height	Min OD Base	Min OD Top	Thickness	Alternative Section B Length	Alternative Section Bottom	Alternative Section Top	C	DI Bolt Circle	Thickness	Anchor Bolts Size	Luminaire Arm	Signal Arm	CIDH Pile Foundation Dia	Depth	Reinforced
18-4-100	4	100	17'-0"	12"	9"	0.2391"	None	9⅜"		1'-6"	1'-6"	1½"	2" ø x 42" x 6"	None	25'-0", 30'-0"	3'-0"	9'-0"	Yes
19-4-100			30'-0"		8"		10'-0"		8"					6'-15' 12'-0"				
19A-4-100			35'-0"		7 5/16"		15'-0'		7 5/16"					6'-15' 15'-0"				
23-4-100			17'-0"		9"		None							None	35'-0"			
24-4-100			30'-0"		8"		10'-0"	9⅜"	8"					6'-15' 12'-0"				
24A-4-100			35'-0"		7 5/16"		15'-0"		7 5/16"					6'-15' 15'-0"				
26-4-100			30'-0"	12½"	8"	0.3125"	10'-0"	9¾"	8⅜"					6'-15' 12'-0"	40'-0", 45'-0"			
26A-4-100			35'-0"		7 5/16"		15'-0"		7 11/16"					6'-15' 15'-0"				
27-4-100			17'-0"		9¾"		None							None				

☐ Indicates arm length to be used unless otherwise noted on plans.

STATE OF CALIFORNIA
DEPARTMENT OF TRANSPORTATION

ELECTRICAL SYSTEMS (SIGNAL AND LIGHTING STANDARD CASE 4 ARM LOADING WIND VELOCITY=100 MPH ARM LENGTHS 25' TO 45')

NO SCALE

RSP ES-7F DATED OCTOBER 5, 2007 SUPERCEDES RSP ES-7F DATED NOVEMBER 17, 2006 AND STANDARD PLAN ES-7F DATED MAY 1, 2006 - PAGE 442 OF THE STANDARD PLANS BOOK DATED MAY 2006.

REVISED STANDARD PLAN RSP ES-7F

2006 REVISED STANDARD PLAN RSP ES-7F

DIST	COUNTY	ROUTE	POST MILES TOTAL PROJECT	SHEET NO.	TOTAL SHEETS
12	Ora	39	3.6	45	45

REGISTERED CIVIL ENGINEER

November 17, 2006
PLANS APPROVAL DATE

REGISTERED PROFESSIONAL ENGINEER Stanley P. Johnson No. C57793 Exp. 03-31-08 CIVIL STATE OF CALIFORNIA

The State of California or its officers or agents shall not be responsible for the accuracy or completeness of electronic copies of this plan sheet.

To accompany plans dated 12-21-09

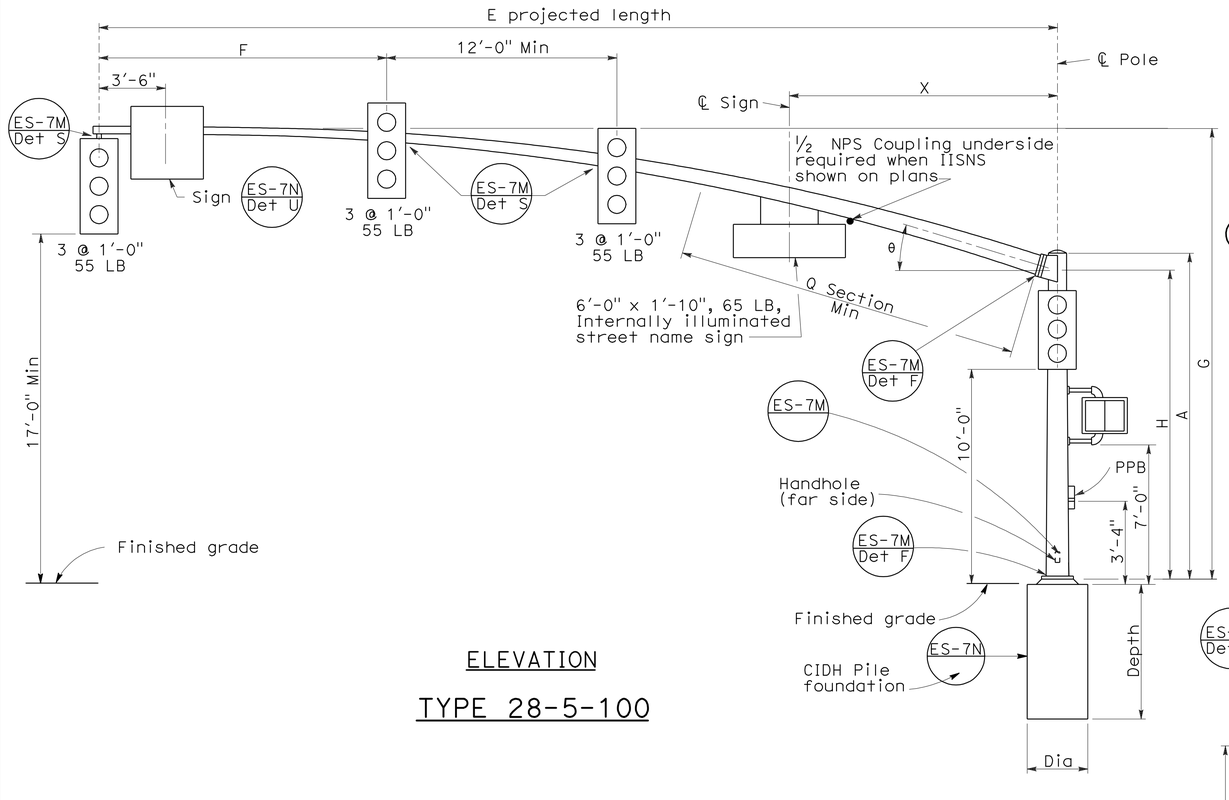

ELEVATION

TYPE 28-5-100

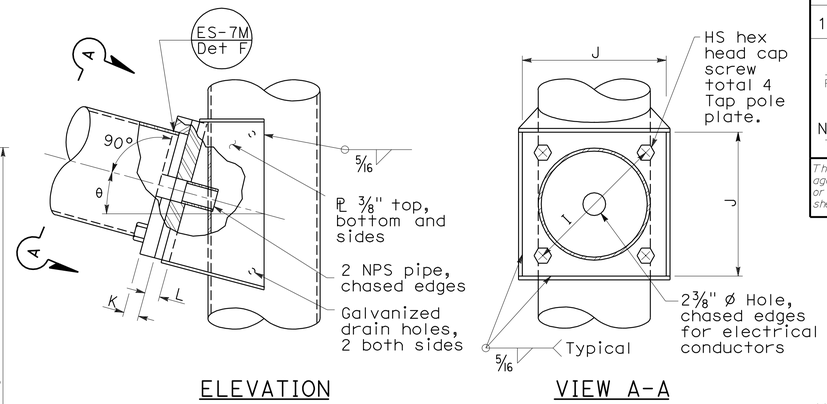

ELEVATION

VIEW A-A

SIGNAL ARM CONNECTION DETAILS

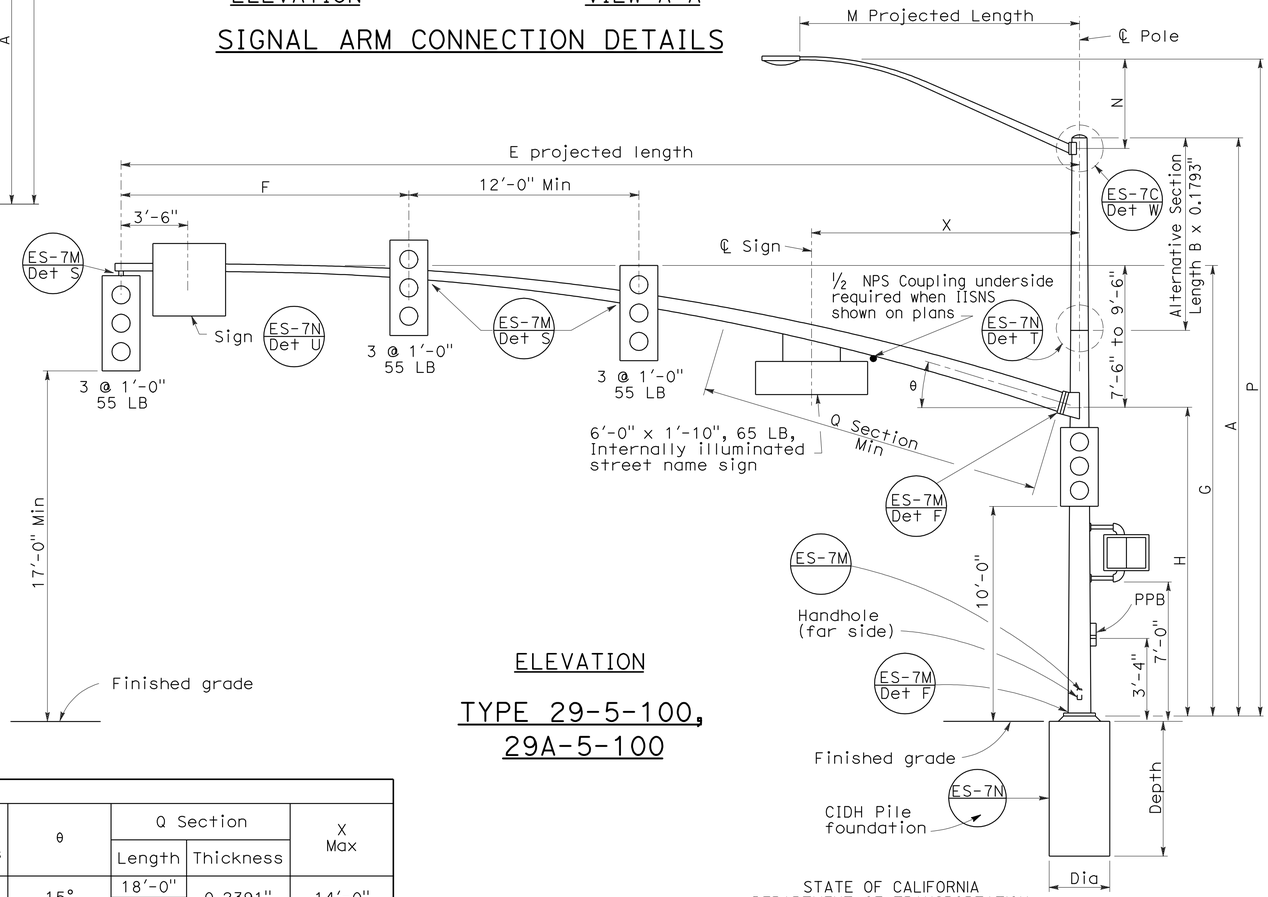

ELEVATION

TYPE 29-5-100, 29A-5-100

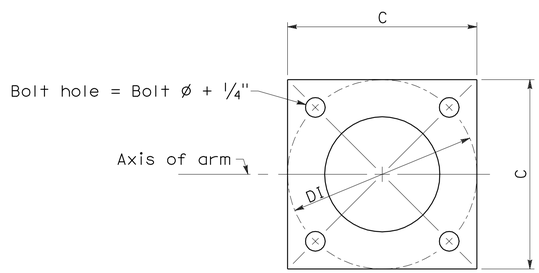

BASE PLATE

LUMINAIRE ARM DATA					
M Projected Length	N Rise	Min OD at Pole	Thickness	P Mounting Height 30'-0" Pole	P Mounting Height 35'-0" Pole
6'-0"	2'-0"±	3 1/4"	0.1196"	31'-6"±	36'-6"±
8'-0"	2'-6"±	3 1/2"		32'-0"±	37'-0"±
10'-0"	3'-3"±	3 7/8"		32'-9"±	37'-9"±
12'-0"	4'-3"±			33'-9"±	38'-9"±
15'-0"	4'-9"±	4 1/4"		34'-3"±	39'-3"±

SIGNAL ARM DATA														
E Projected Length	F Min Spacing	G Mounting Height	H	Min OD at Pole	Thickness	I Bolt Circle	HS Cap Screws	J Plate Size	K Arm ℄ Thickness	L Pole ℄ Thickness	θ	Q Section Length	Q Section Thickness	X Max
50'-0"	15'-0"	23'-7"± to 25'-7"±	16'-0"	11 7/16"	0.1793"	16"	1 1/2"-6NC-3 1/4"	1'-4"	1 3/4"	1 3/4"	15°	18'-0"	0.2391"	14'-0"
55'-0"				1'-1/4"								23'-0"		

POLE DATA									BASE PLATE DATA						CIDH PILE FOUNDATION		
Pole Type	Load Case	Wind Velocity mph	A Height	Min OD Base	Min OD Top	Thickness	Alternative Section B Length	Alternative Section Bottom	Alternative Section Top	C	DI Bolt Circle	Thickness	Anchor Bolts Size	Luminaire Arm	Signal Arm	Dia	Depth	Reinforced
28-5-100	5	100	17'-0"	14"	11 11/16"	0.3125"	None	11 1/4"	9 7/8"	21"	21"	1 3/4"	2" ø x 42" x 6"	None	50'-0", 55'-0"	3'-0"	9'-2"	Yes
29-5-100			30'-0"		9 7/8"		10'-0"							6'-15' [15'-0"]				
29A-5-100			35'-0"		9 3/16"		15'-0"		9 3/16"	23"	23"							

[ ] Indicates arm length to be used unless otherwise noted on plans.

STATE OF CALIFORNIA
DEPARTMENT OF TRANSPORTATION

ELECTRICAL SYSTEMS (SIGNAL AND LIGHTING STANDARD CASE 5 ARM LOADING WIND VELOCITY=100 MPH ARM LENGTHS 50' TO 55')

NO SCALE

RSP ES-7G DATED NOVEMBER 17, 2006 SUPERSEDES STANDARD PLAN ES-7G DATED MAY 1, 2006 - PAGE 443 OF THE STANDARD PLANS BOOK DATED MAY 2006.

REVISED STANDARD PLAN RSP ES-7G

2006 REVISED STANDARD PLAN RSP ES-7G

5-15-06