Dist	COUNTY	ROUTE	POST MILES TOTAL PROJECT	SHEET No.	TOTAL SHEETS
12	Ora	5	17.1/17.8	1	81

IM-005-2(959)89E

STATE OF CALIFORNIA
DEPARTMENT OF TRANSPORTATION

PROJECT PLANS FOR CONSTRUCTION ON
STATE HIGHWAY
IN ORANGE COUNTY
IN LAKE FOREST, LAGUNA HILLS, AND MISSION VIEJO
FROM 0.4 MILE SOUTH OF ALICIA PARKWAY OVERCROSSING TO 0.3 MILE NORTH OF ALICIA PARKWAY OVERCROSSING

TO BE SUPPLEMENTED BY STANDARD PLANS DATED MAY 2006

INDEX OF PLANS

SHEET No.	DESCRIPTION
1	TITLE AND LOCATION MAP
2-4	TYPICAL CROSS SECTIONS
5-8	LAYOUTS
9	CONSTRUCTION DETAILS
10-13	UTILITY PLANS
14	CONSTRUCTION AREA SIGNS
15-21	STAGE CONSTRUCTION PLANS AND QUANTITIES
22-28	TRAFFIC HANDLING PLAN AND QUANTITIES
29-37	PAVEMENT DELINEATION AND SIGN PLANS
38-39	SUMMARY OF QUANTITIES
40-45	ELECTRICAL PLANS
46-81	REVISED AND NEW STANDARD PLANS

THE STANDARD PLANS LIST APPLICABLE TO THIS CONTRACT IS INCLUDED IN THE NOTICE TO BIDDERS AND SPECIAL PROVISIONS BOOK.

LOCATION MAP

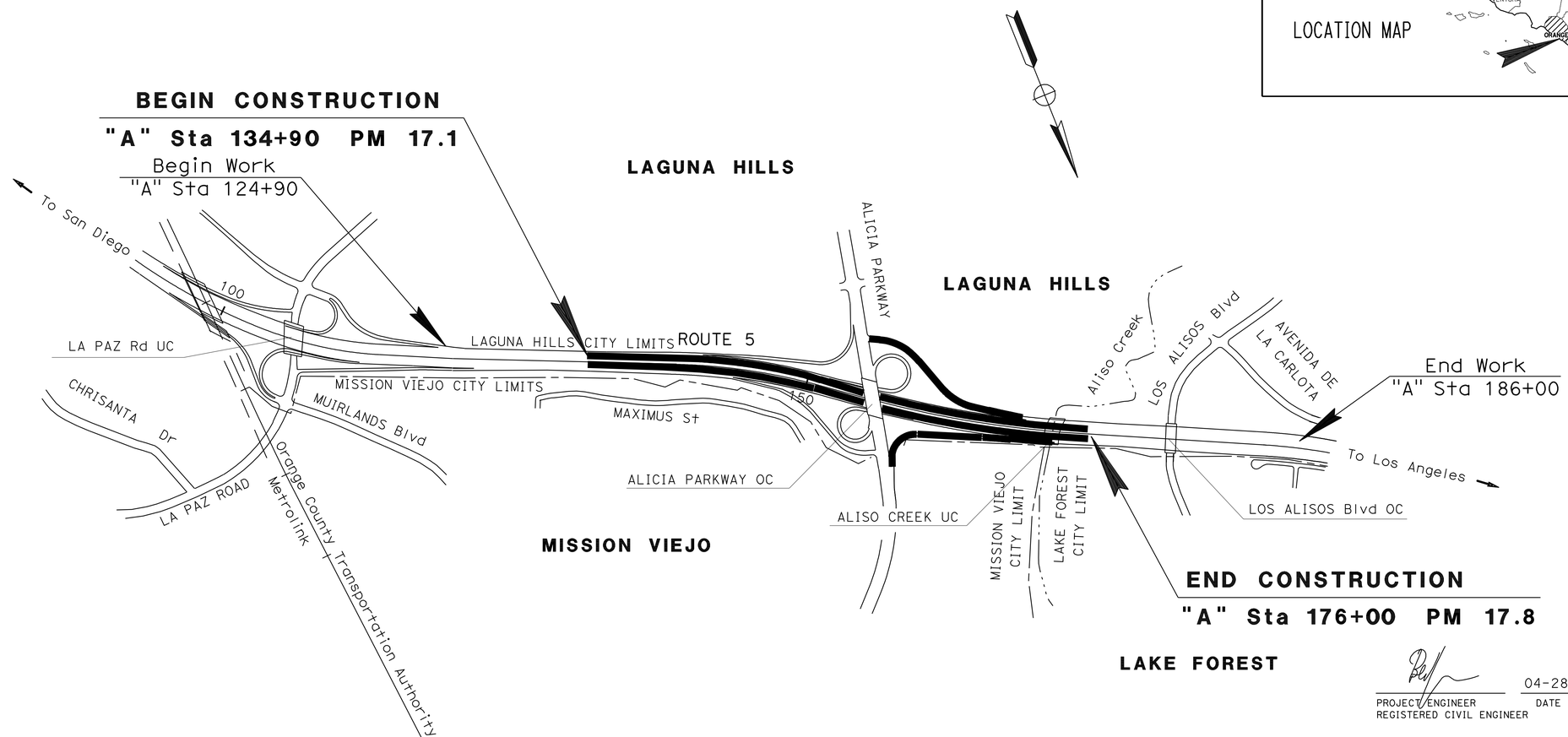

PROJECT ENGINEER
REGISTERED CIVIL ENGINEER

04-28-11
DATE

May 23, 2011
PLANS APPROVAL DATE

REGISTERED PROFESSIONAL ENGINEER
BEN IONESCU
No. 65482
Exp. 09-30-11
CIVIL
STATE OF CALIFORNIA

THE STATE OF CALIFORNIA OR ITS OFFICERS OR AGENTS SHALL NOT BE RESPONSIBLE FOR THE ACCURACY OR COMPLETENESS OF SCANNED COPIES OF THIS PLAN SHEET.

PROJECT MANAGER: AHMED ABOU-ABDOU

DESIGN ENGINEER: BEN IONESCU

THE CONTRACTOR SHALL POSSESS THE CLASS (OR CLASSES) OF LICENSE AS SPECIFIED IN THE "NOTICE TO BIDDERS."

NO SCALE

CONTRACT No.	12-0K6204
PROJECT ID	1200000362

LAST REVISION 11-29-10 | DATE PLOTTED => 26-AUG-2011 | TIME PLOTTED => 10:44

Dist	COUNTY	ROUTE	POST MILES TOTAL PROJECT	SHEET No.	TOTAL SHEETS
12	Ora	5	17.1/17.8	2	81

REGISTERED CIVIL ENGINEER 04-28-11 DATE

5-23-11
PLANS APPROVAL DATE

REGISTERED PROFESSIONAL ENGINEER BEN IONESCU No. C65482 Exp. 09-30-11 CIVIL STATE OF CALIFORNIA

THE STATE OF CALIFORNIA OR ITS OFFICERS OR AGENTS SHALL NOT BE RESPONSIBLE FOR THE ACCURACY OR COMPLETENESS OF SCANNED COPIES OF THIS PLAN SHEET.

NOTES:

1. DIMENSIONS OF THE STRUCTURAL SECTIONS ARE SUBJECT TO TOLERANCES SPECIFIED IN THE STANDARD SPECIFICATIONS.
2. SUPERELEVATION AS SHOWN OR AS DIRECTED BY THE ENGINEER.
3. FOR EXACT LOCATIONS AND TYPES OF DIKE, CURB AND MBGR SEE LAYOUTS

STRUCTURE SECTION TYPES:

1 — 0.1′ HMA (OPEN GRADED)

2 — GROOVE Exist CONCRETE PAVEMENT

3 — 0.80′ CONCRETE PAVEMENT (RAPID STRENGTH CONCRETE)
0.35′ LCB RAPID SETTING
0.70′ Class 2 AS

4 — 1.00′ CONCRETE PAVEMENT (RAPID STRENGTH CONCRETE)
0.35′ LCB RAPID SETTING
0.70′ CLASS 2 AS

5 — GRIND Exist CONCRETE PAVEMENT

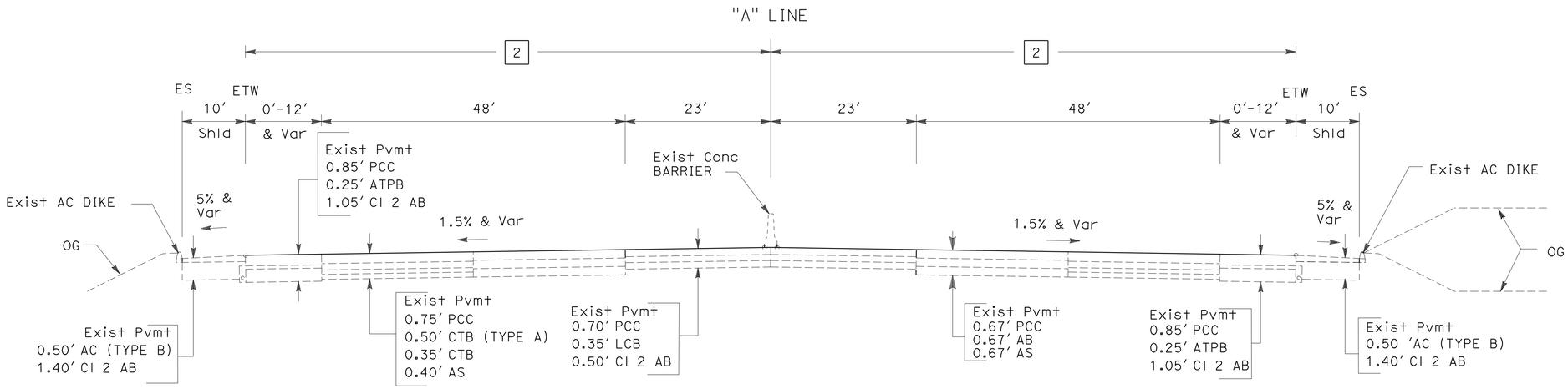

ROUTE 5

"A" 146+75.54 TO "A" 164+00

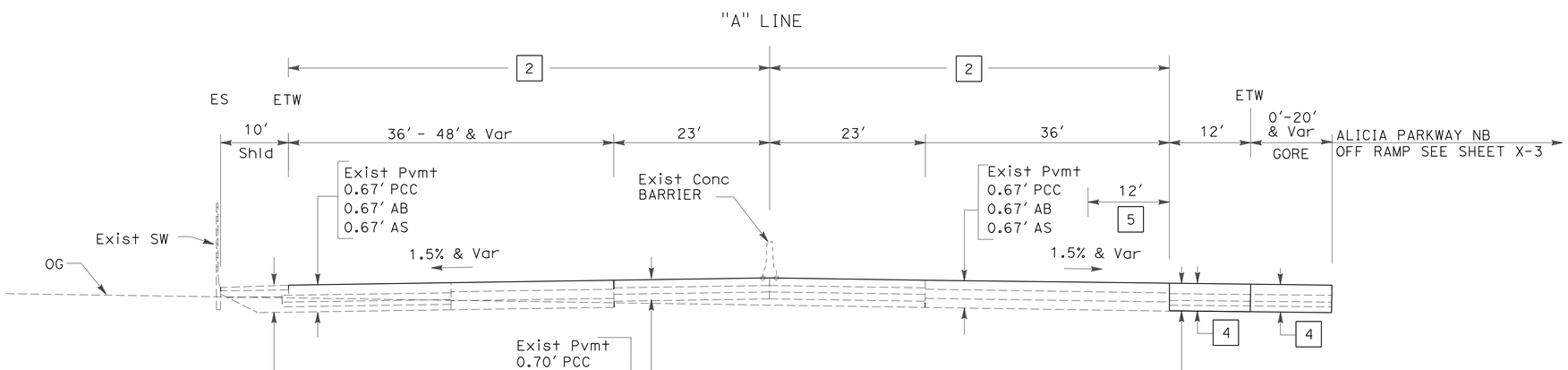

ROUTE 5

"A" 139+50 TO "A" 146+75.54

TYPICAL CROSS SECTIONS

NO SCALE

X-1

STATE OF CALIFORNIA - DEPARTMENT OF TRANSPORTATION
Caltrans® **DESIGN DIVISION**

FUNCTIONAL SUPERVISOR: KAMRAN MAZHAR

CALCULATED-DESIGNED BY: BEN IONESCU
CHECKED BY: DUNG PHAN

REVISED BY / DATE REVISED

LAST REVISION 11-19-10 | DATE PLOTTED => 26-AUG-2011 | TIME PLOTTED => 10:44

Dist	COUNTY	ROUTE	POST MILES TOTAL PROJECT	SHEET No.	TOTAL SHEETS
12	Ora	5	17.1/17.8	3	81

REGISTERED CIVIL ENGINEER 04-28-11 DATE

5-23-11
PLANS APPROVAL DATE

REGISTERED PROFESSIONAL ENGINEER
BEN IONESCU
No. C65482
Exp. 09-30-11
CIVIL
STATE OF CALIFORNIA

THE STATE OF CALIFORNIA OR ITS OFFICERS OR AGENTS SHALL NOT BE RESPONSIBLE FOR THE ACCURACY OR COMPLETENESS OF SCANNED COPIES OF THIS PLAN SHEET.

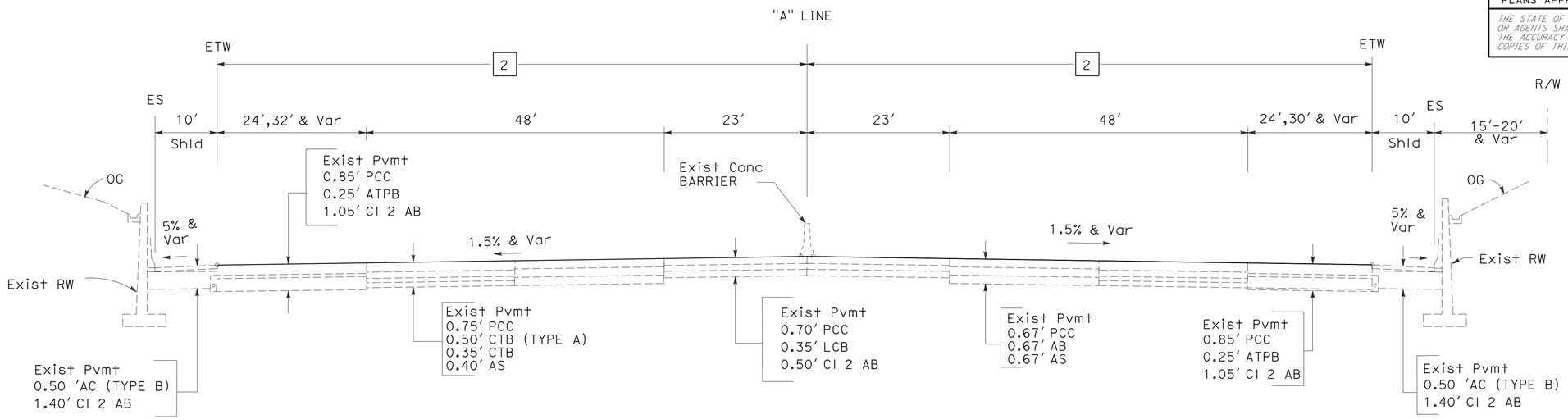

ROUTE 5

"A" 171+19.96 TO "A" 176+00

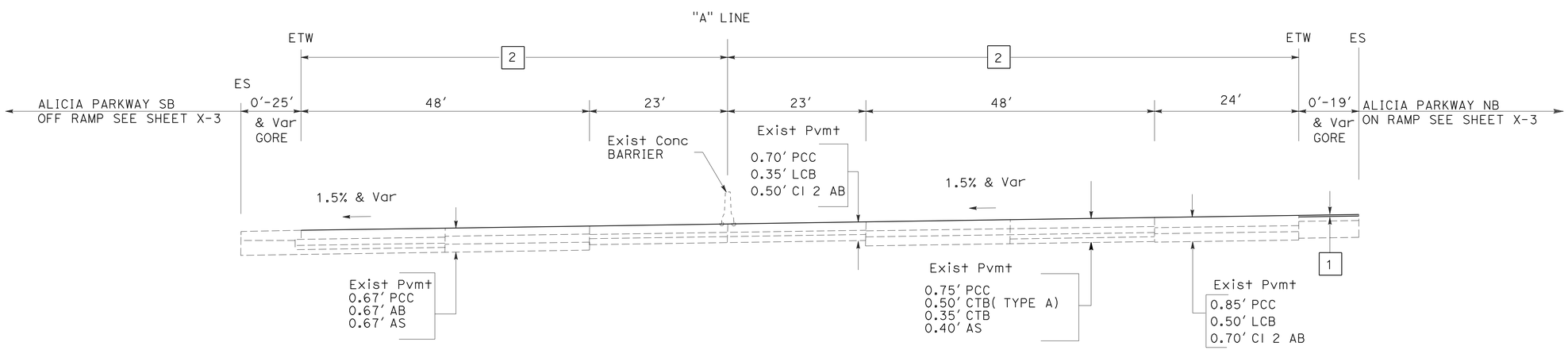

ROUTE 5

"A" 164+00 TO "A" 171+19.96

TYPICAL CROSS SECTIONS

NO SCALE

X-2

STATE OF CALIFORNIA - DEPARTMENT OF TRANSPORTATION
Caltrans® DESIGN DIVISION

FUNCTIONAL SUPERVISOR: KAMRAN MAZHAR
CALCULATED-DESIGNED BY: BEN IONESCU
CHECKED BY: DUNG PHAN
REVISED BY / DATE REVISED

LAST REVISION 11-19-10
DATE PLOTTED => 26-AUG-2011
TIME PLOTTED => 10:44

Dist	COUNTY	ROUTE	POST MILES TOTAL PROJECT	SHEET No.	TOTAL SHEETS
12	Ora	5	17.1/17.8	4	81

REGISTERED CIVIL ENGINEER 04-28-11 DATE

5-23-11
PLANS APPROVAL DATE

REGISTERED PROFESSIONAL ENGINEER
BEN IONESCU
No. C65482
Exp. 09-30-11
CIVIL
STATE OF CALIFORNIA

THE STATE OF CALIFORNIA OR ITS OFFICERS OR AGENTS SHALL NOT BE RESPONSIBLE FOR THE ACCURACY OR COMPLETENESS OF SCANNED COPIES OF THIS PLAN SHEET.

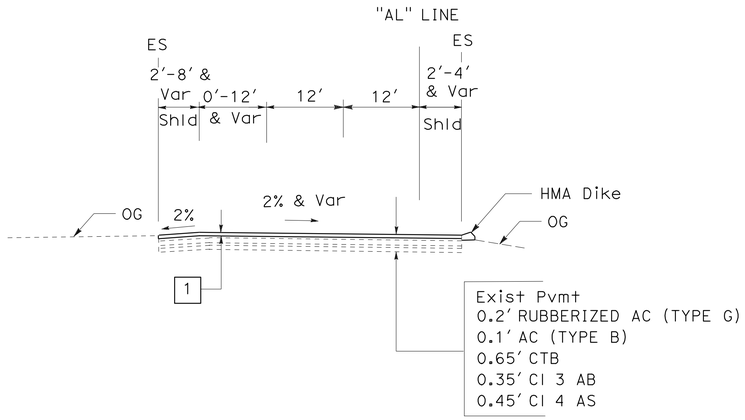

ALICIA PARKWAY SB OFF-RAMP

"AL" 55+48.50 TO "AL" 64+00.0

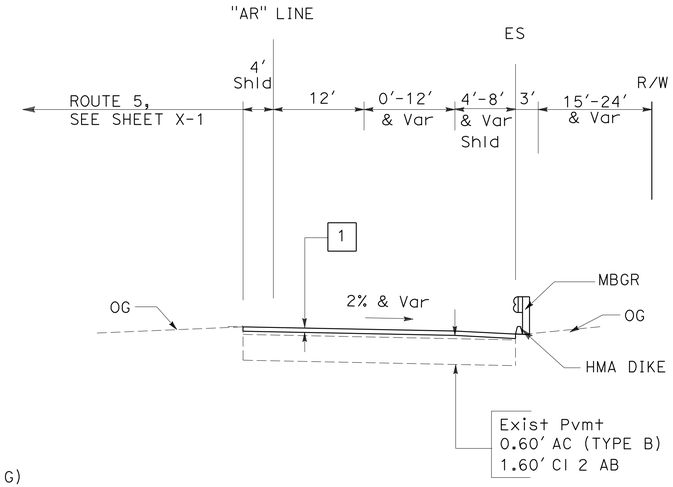

ALICIA PARKWAY NB ON-RAMP

"AP" 26+61.74 TO "AR" 20+46.51

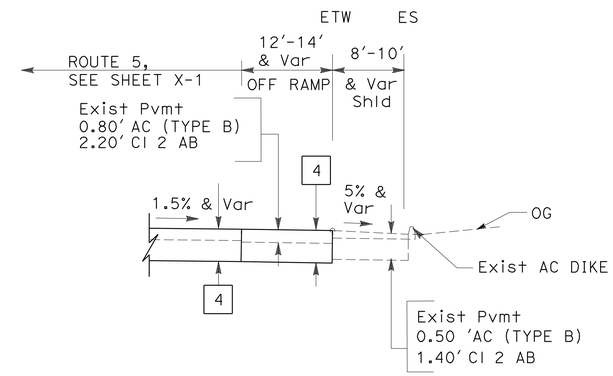

ALICIA PARKWAY NB OFF-RAMP

"A" 141+72.37 TO "A" 146+75.54

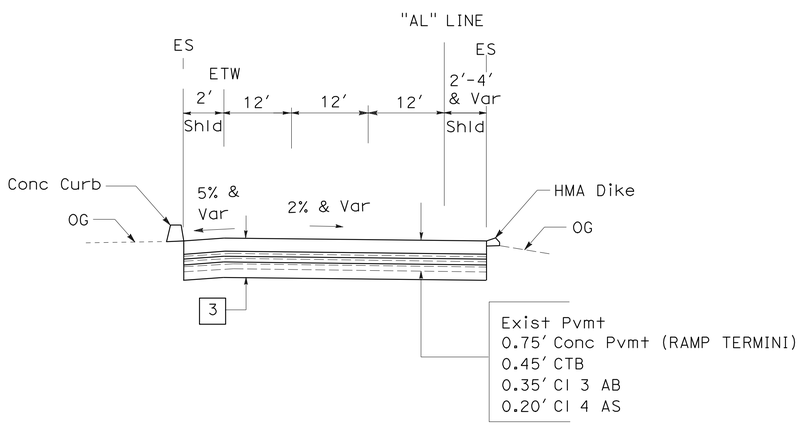

ALICIA PARKWAY SB OFF-RAMP

"AL" 53+39.43 TO "AL" 55+48.50

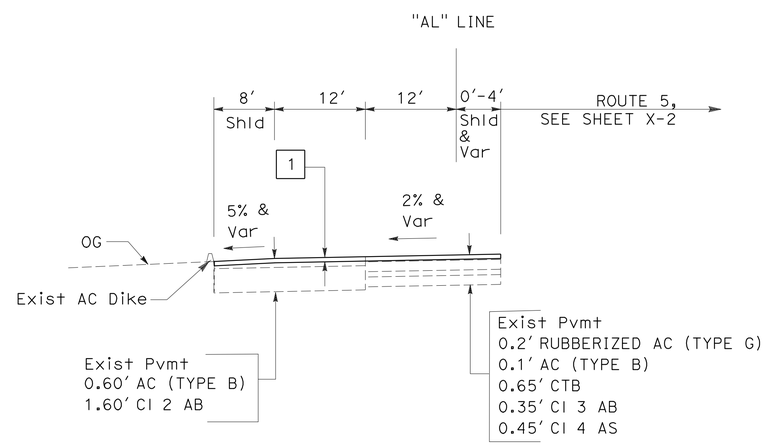

ALICIA PARKWAY SB OFF-RAMP

"AL" 64+00.0 TO "AL" 68+60.93

TYPICAL CROSS SECTIONS

NO SCALE

X-3

REVISED BY	DATE REVISED
BEN IONESCU	DUNG PHAN
CALCULATED-DESIGNED BY	CHECKED BY
FUNCTIONAL SUPERVISOR	KAMRAN MAZHAR

STATE OF CALIFORNIA - DEPARTMENT OF TRANSPORTATION
Caltrans® DESIGN DIVISION

LAST REVISION 11-19-10 | DATE PLOTTED => 26-AUG-2011 | TIME PLOTTED => 10:44

Dist	COUNTY	ROUTE	POST MILES TOTAL PROJECT	SHEET No.	TOTAL SHEETS
12	Ora	5	17.1/17.8	5	81

REGISTERED CIVIL ENGINEER 04-28-11 DATE

5-23-11
PLANS APPROVAL DATE

REGISTERED PROFESSIONAL ENGINEER
BEN IONESCU
No. C65482
Exp. 09-30-11
CIVIL
STATE OF CALIFORNIA

THE STATE OF CALIFORNIA OR ITS OFFICERS OR AGENTS SHALL NOT BE RESPONSIBLE FOR THE ACCURACY OR COMPLETENESS OF SCANNED COPIES OF THIS PLAN SHEET.

NOTES:

1. FOR ACCURATE RIGHT OF WAY AND ACCESS DATA, CONTACT RIGHT OF WAY ENGINEERING AT THE DISTRICT OFFICE
2. FOR FINISHED GRADE ELEVATIONS AT AR1 LINE AND AL LINE SEE CONSTRUCTION DETAILS.

CURVE DATA

No.	R	Δ	T	L
1	5000′	13°59′46″	613.76′	1221.41′
8	8500.33′	3°49′30″	283.85′	567.48′
9	2000.09′	5°30′23″	96.19′	192.22′
10	4502.87′	1°29′48″	58.81′	117.61′

LEGEND:

[X] STRUCTURAL SECTION

(X) CURVE No.

-------- LIMITS OF GRIND Conc Pvmt

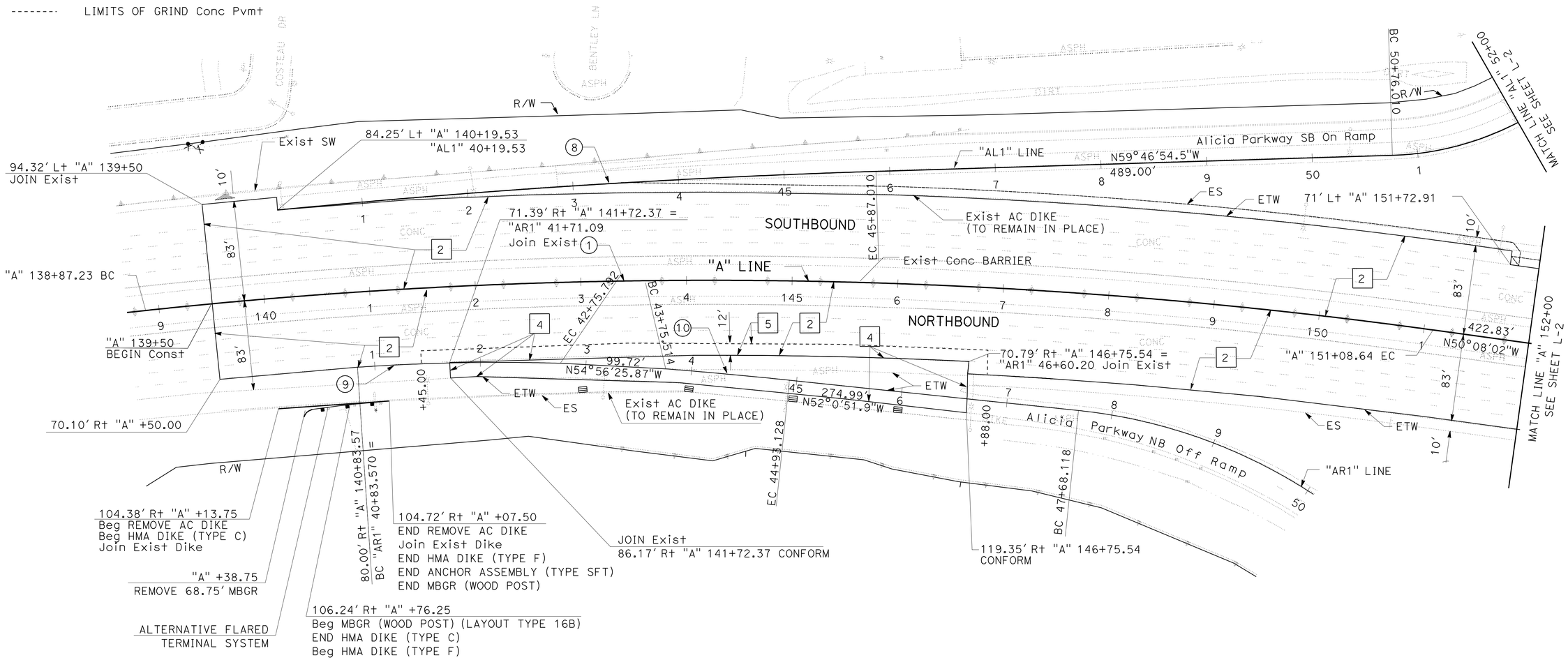

LAYOUT

SCALE: 1″=50′

L-1

STATE OF CALIFORNIA - DEPARTMENT OF TRANSPORTATION
Caltrans® DESIGN DIVISION

FUNCTIONAL SUPERVISOR: KAMRAN MAZHAR
CALCULATED-DESIGNED BY: BEN IONESCU
CHECKED BY: DUNG PHAN
REVISED BY
DATE REVISED

LAST REVISION 11-19-10
DATE PLOTTED => 26-AUG-2011
TIME PLOTTED => 10:44

Dist	COUNTY	ROUTE	POST MILES TOTAL PROJECT	SHEET No.	TOTAL SHEETS
12	Ora	5	17.1/17.8	6	81

REGISTERED CIVIL ENGINEER 04-28-11 DATE

5-23-11
PLANS APPROVAL DATE

REGISTERED PROFESSIONAL ENGINEER BEN IONESCU No. C65482 Exp. 09-30-11 CIVIL STATE OF CALIFORNIA

THE STATE OF CALIFORNIA OR ITS OFFICERS OR AGENTS SHALL NOT BE RESPONSIBLE FOR THE ACCURACY OR COMPLETENESS OF SCANNED COPIES OF THIS PLAN SHEET.

NOTES:

1. FOR ACCURATE RIGHT OF WAY AND ACCESS DATA, CONTACT RIGHT OF WAY ENGINEERING AT THE DISTRICT OFFICE

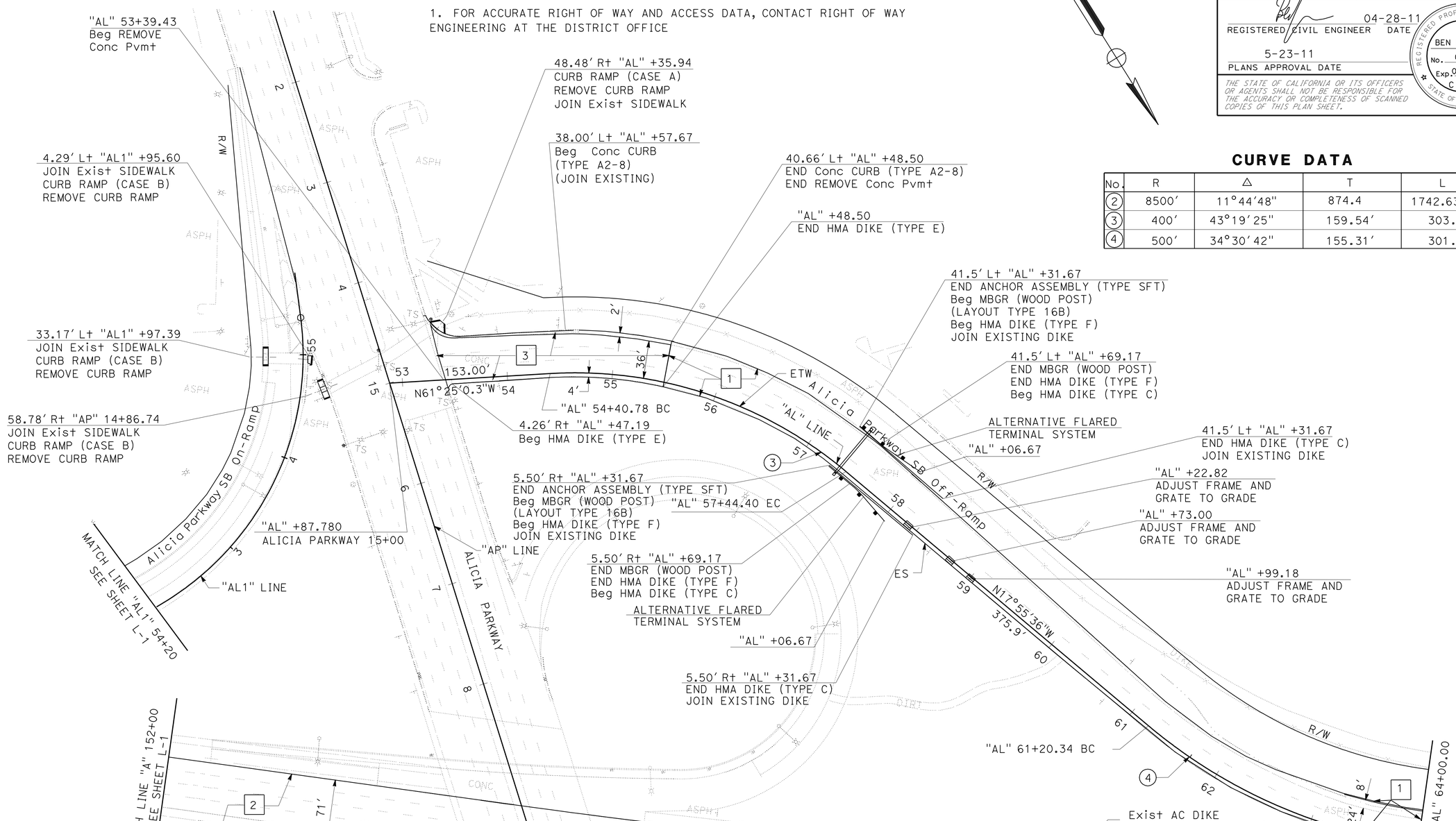

CURVE DATA

No.	R	Δ	T	L
2	8500'	11°44'48"	874.4	1742.63'
3	400'	43°19'25"	159.54'	303.62'
4	500'	34°30'42"	155.31'	301.17'

LAYOUT

SCALE: 1"=50'

L-2

STATE OF CALIFORNIA - DEPARTMENT OF TRANSPORTATION
Caltrans® DESIGN DIVISION

FUNCTIONAL SUPERVISOR: KAMRAN MAZHAR
CALCULATED-DESIGNED BY: BEN IONESCU
CHECKED BY: DUNG PHAN
REVISED BY / DATE REVISED

LAST REVISION 11-19-10 | DATE PLOTTED => 26-AUG-2011 | TIME PLOTTED => 10:44

Dist	COUNTY	ROUTE	POST MILES TOTAL PROJECT	SHEET No.	TOTAL SHEETS
12	Ora	5	17.1/17.8	7	81

REGISTERED CIVIL ENGINEER 04-28-11 DATE

5-23-11
PLANS APPROVAL DATE

REGISTERED PROFESSIONAL ENGINEER BEN IONESCU No. C65482 Exp. 09-30-11 CIVIL STATE OF CALIFORNIA

THE STATE OF CALIFORNIA OR ITS OFFICERS OR AGENTS SHALL NOT BE RESPONSIBLE FOR THE ACCURACY OR COMPLETENESS OF SCANNED COPIES OF THIS PLAN SHEET.

NOTES:

1. FOR ACCURATE RIGHT OF WAY AND ACCESS DATA, CONTACT RIGHT OF WAY ENGINEERING AT THE DISTRICT OFFICE

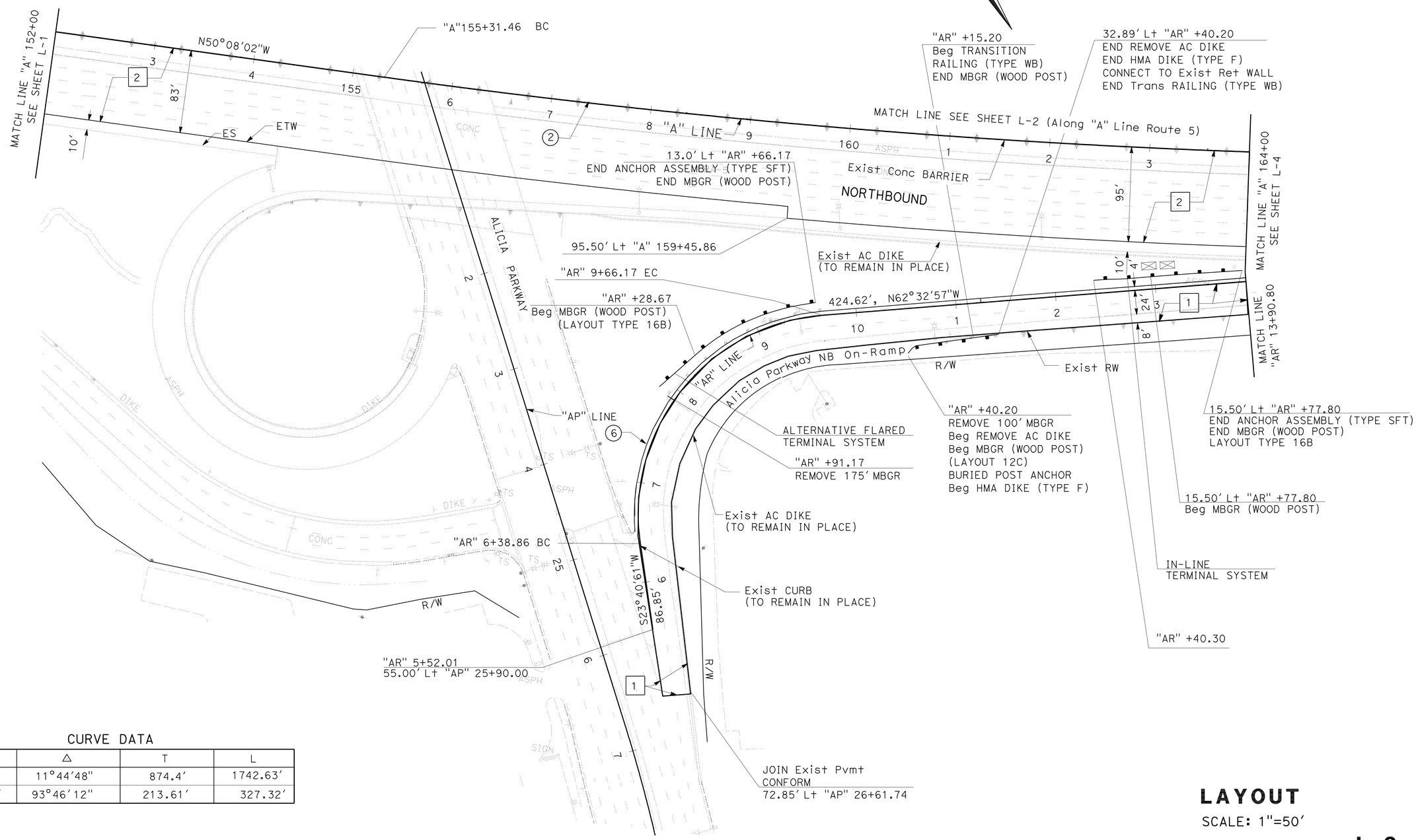

CURVE DATA

No.	R	Δ	T	L
2	8500'	11°44'48"	874.4'	1742.63'
6	200'	93°46'12"	213.61'	327.32'

LAYOUT

SCALE: 1"=50'

L-3

STATE OF CALIFORNIA - DEPARTMENT OF TRANSPORTATION
Caltrans® DESIGN DIVISION

FUNCTIONAL SUPERVISOR: KAMRAN MAZHAR
CALCULATED-DESIGNED BY: BEN IONESCU
CHECKED BY: DUNG PHAN
REVISED BY
DATE REVISED

LAST REVISION 11-19-10 DATE PLOTTED => 26-AUG-2011 TIME PLOTTED => 10:44

Dist	COUNTY	ROUTE	POST MILES TOTAL PROJECT	SHEET No.	TOTAL SHEETS
12	Ora	5	17.1/17.8	8	81

REGISTERED CIVIL ENGINEER 04-28-11 DATE

5-23-11
PLANS APPROVAL DATE

REGISTERED PROFESSIONAL ENGINEER
BEN IONESCU
No. C65482
Exp. 09-30-11
CIVIL
STATE OF CALIFORNIA

THE STATE OF CALIFORNIA OR ITS OFFICERS OR AGENTS SHALL NOT BE RESPONSIBLE FOR THE ACCURACY OR COMPLETENESS OF SCANNED COPIES OF THIS PLAN SHEET.

NOTES:

1. FOR ACCURATE RIGHT OF WAY AND ACCESS DATA, CONTACT RIGHT OF WAY ENGINEERING AT THE DISTRICT OFFICE

No. O	R	Δ	T	L
25	8502.08′	2°28′11"	183.26′	366.46′

CURVE DATA

No.	R	Δ	T	L
2	8500′	11°44′48"	874.4′	1742.63′
5	10000′	1°42′58"	149.77′	299.52′
7	4600′	3°01′11"	121.25′	242.44′
11	8502′	2°28′11"	183.26′	366.46′

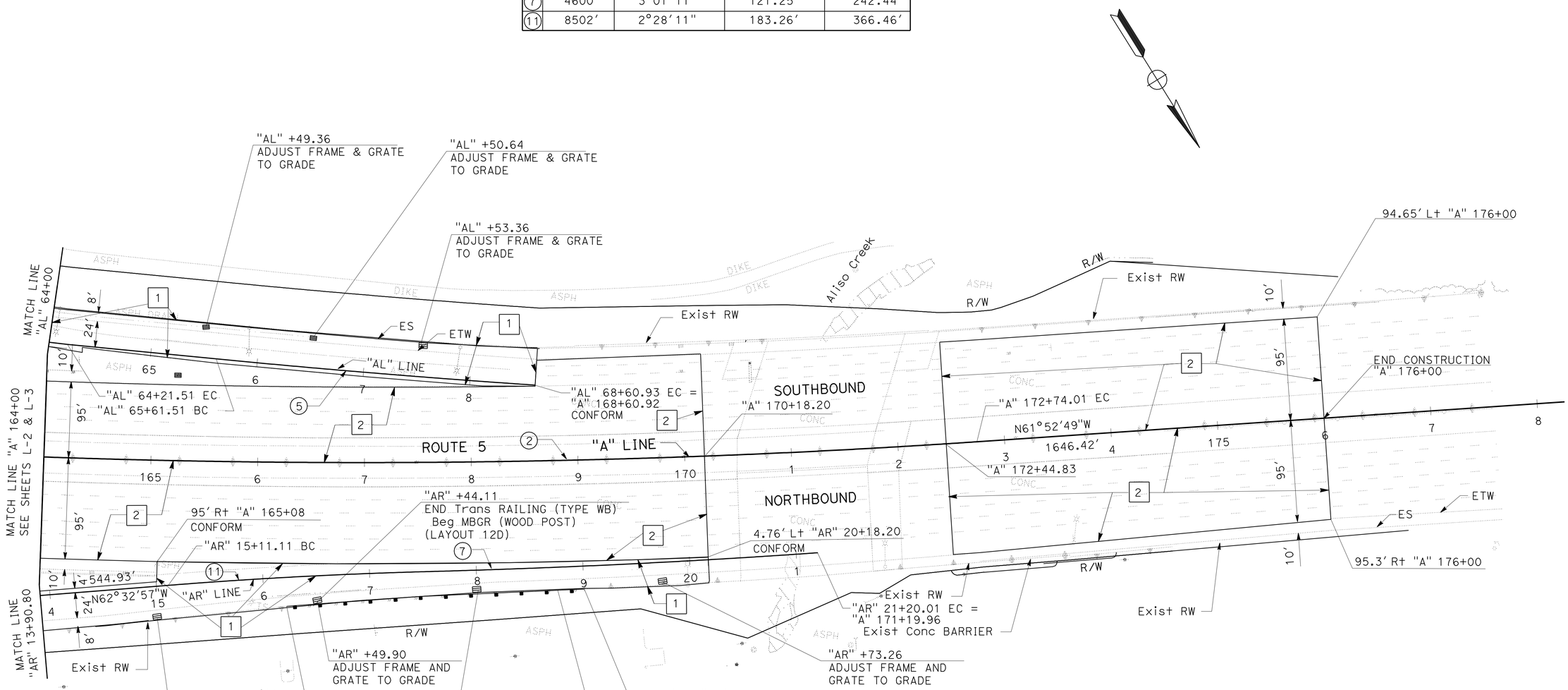

LAYOUT

SCALE: 1"=50′

L-4

STATE OF CALIFORNIA - DEPARTMENT OF TRANSPORTATION
Caltrans DESIGN DIVISION

FUNCTIONAL SUPERVISOR: KAMRAN MAZHAR
CALCULATED-DESIGNED BY: BEN IONESCU
CHECKED BY: DUNG PHAN
REVISED BY
DATE REVISED

LAST REVISION 11-22-10
DATE PLOTTED => 26-AUG-2011
TIME PLOTTED => 10:44

Dist	COUNTY	ROUTE	POST MILES TOTAL PROJECT	SHEET No.	TOTAL SHEETS
12	Ora	5	17.1/17.8	9	81

REGISTERED CIVIL ENGINEER 04-28-11 DATE

5-23-11
PLANS APPROVAL DATE

REGISTERED PROFESSIONAL ENGINEER BEN IONESCU No. C65482 Exp. 09-30-11 CIVIL STATE OF CALIFORNIA

THE STATE OF CALIFORNIA OR ITS OFFICERS OR AGENTS SHALL NOT BE RESPONSIBLE FOR THE ACCURACY OR COMPLETENESS OF SCANNED COPIES OF THIS PLAN SHEET.

LEGEND:

[X] STRUCTURAL SECTION

XXX.XX FINISHED GRADE ELEVATIONS

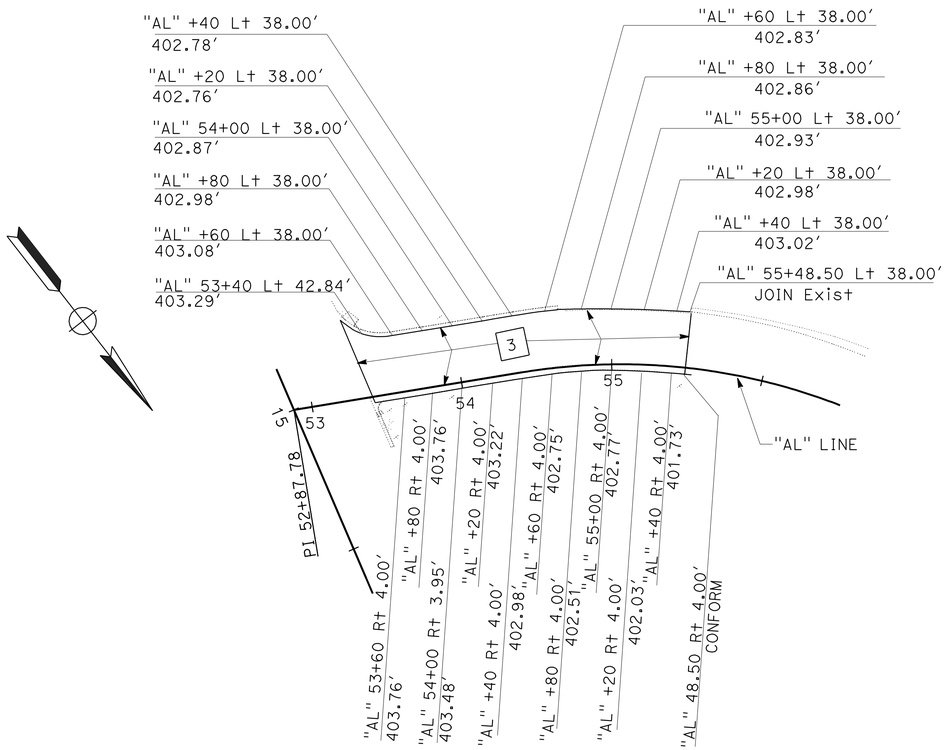

"AL" LINE FINISHED GRADE ELEVATIONS

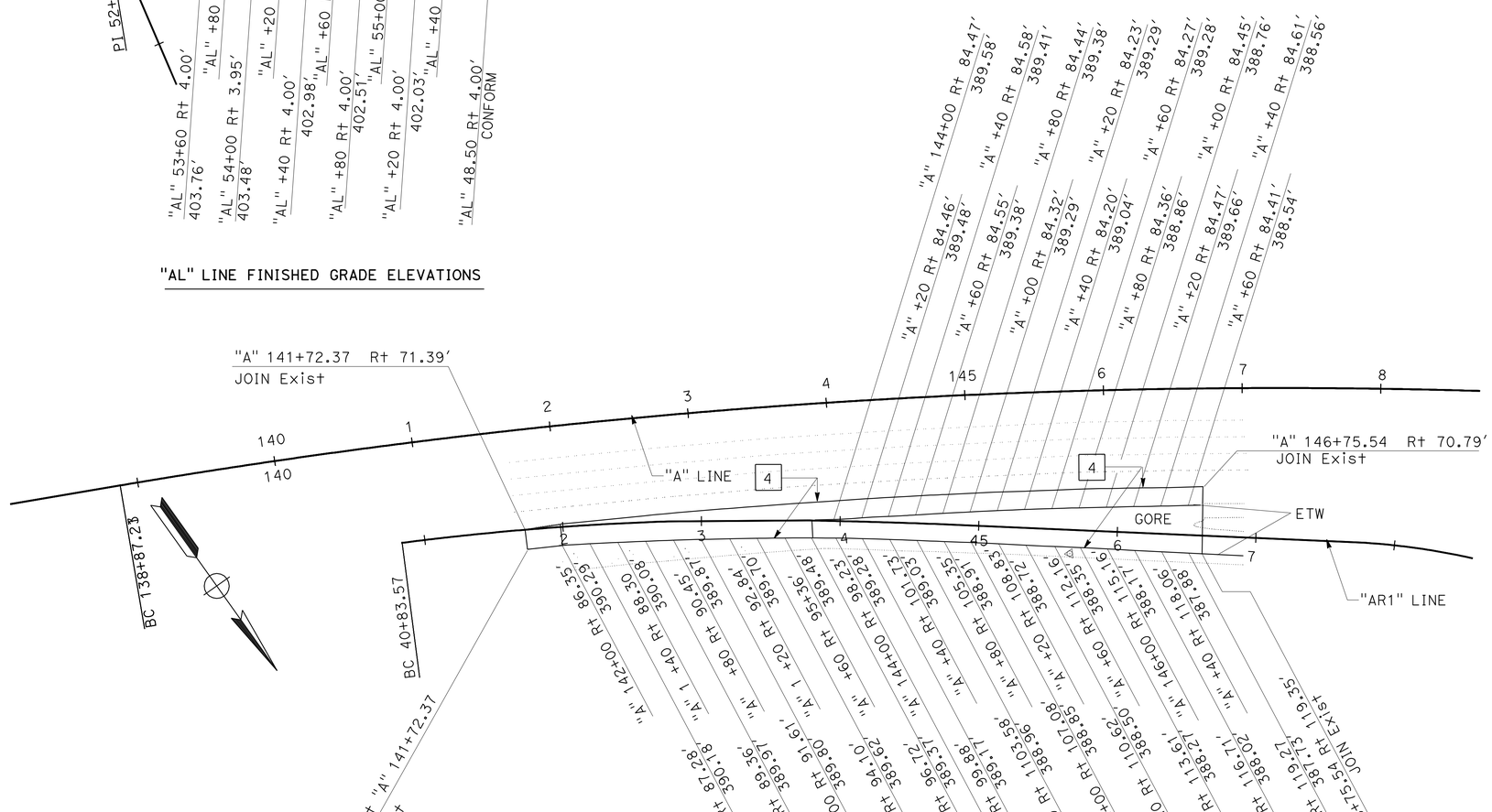

"AR1" LINE FINISHED GRADE ELEVATIONS

CONSTRUCTION DETAIL

SCALE: 1"=50′

C-1

STATE OF CALIFORNIA - DEPARTMENT OF TRANSPORTATION
Caltrans® DESIGN DIVISION

FUNCTIONAL SUPERVISOR: KAMRAN MAZHAR
CALCULATED-DESIGNED BY: BEN IONESCU
CHECKED BY: DUNG PHAN
REVISED BY
DATE REVISED

LAST REVISION 11-19-10 | DATE PLOTTED => 26-AUG-2011 | TIME PLOTTED => 10:44

Dist	COUNTY	ROUTE	POST MILES TOTAL PROJECT	SHEET No.	TOTAL SHEETS
12	Ora	5	17.1/17.8	10	81

REGISTERED CIVIL ENGINEER DATE 04-28-11

5-23-11
PLANS APPROVAL DATE

REGISTERED PROFESSIONAL ENGINEER
BEN IONESCU
No. C65482
Exp. 09-30-11
CIVIL
STATE OF CALIFORNIA

THE STATE OF CALIFORNIA OR ITS OFFICERS OR AGENTS SHALL NOT BE RESPONSIBLE FOR THE ACCURACY OR COMPLETENESS OF SCANNED COPIES OF THIS PLAN SHEET.

NOTES:

1. FOR ACCURATE RIGHT OF WAY AND ACCESS DATA, CONTACT RIGHT OF WAY ENGINEERING AT THE DISTRICT OFFICE

2. LOCATIONS OF UTILITY FACILITIES SHOWN ON THESE PLANS ARE APPROXIMATE AND SHALL BE VERIFIED BY THE CONTRACTOR PRIOR TO CONSTRUCTION.

ABBREVIATIONS:

SMWD SANTA MARGARITA WATER DISTRICT
SCE SOUTHERN CALIFORNIA EDISON
AT&T AMERICAN TELEPHONE & TELEGRAPH

UTILITY PLAN

SCALE: 1"=50'

U-1

THIS PLAN ACCURATE FOR UTILITY INFORMATION ONLY

STATE OF CALIFORNIA - DEPARTMENT OF TRANSPORTATION
Caltrans
DESIGN DIVISION

FUNCTIONAL SUPERVISOR: KAMRAN MAZHAR
CALCULATED-DESIGNED BY: BEN IONESCU
CHECKED BY: DUNG PHAN
REVISED BY
DATE REVISED

LAST REVISION 11-22-10
DATE PLOTTED => 26-AUG-2011
TIME PLOTTED => 10:44

Dist	COUNTY	ROUTE	POST MILES TOTAL PROJECT	SHEET No.	TOTAL SHEETS
12	Ora	5	17.1/17.8	11	81

REGISTERED CIVIL ENGINEER 04-28-11 DATE

5-23-11
PLANS APPROVAL DATE

REGISTERED PROFESSIONAL ENGINEER
BEN IONESCU
No. C65482
Exp. 09-30-11
CIVIL
STATE OF CALIFORNIA

THE STATE OF CALIFORNIA OR ITS OFFICERS OR AGENTS SHALL NOT BE RESPONSIBLE FOR THE ACCURACY OR COMPLETENESS OF SCANNED COPIES OF THIS PLAN SHEET.

NOTES:

1. FOR ACCURATE RIGHT OF WAY AND ACCESS DATA, CONTACT RIGHT OF WAY ENGINEERING AT THE DISTRICT OFFICE

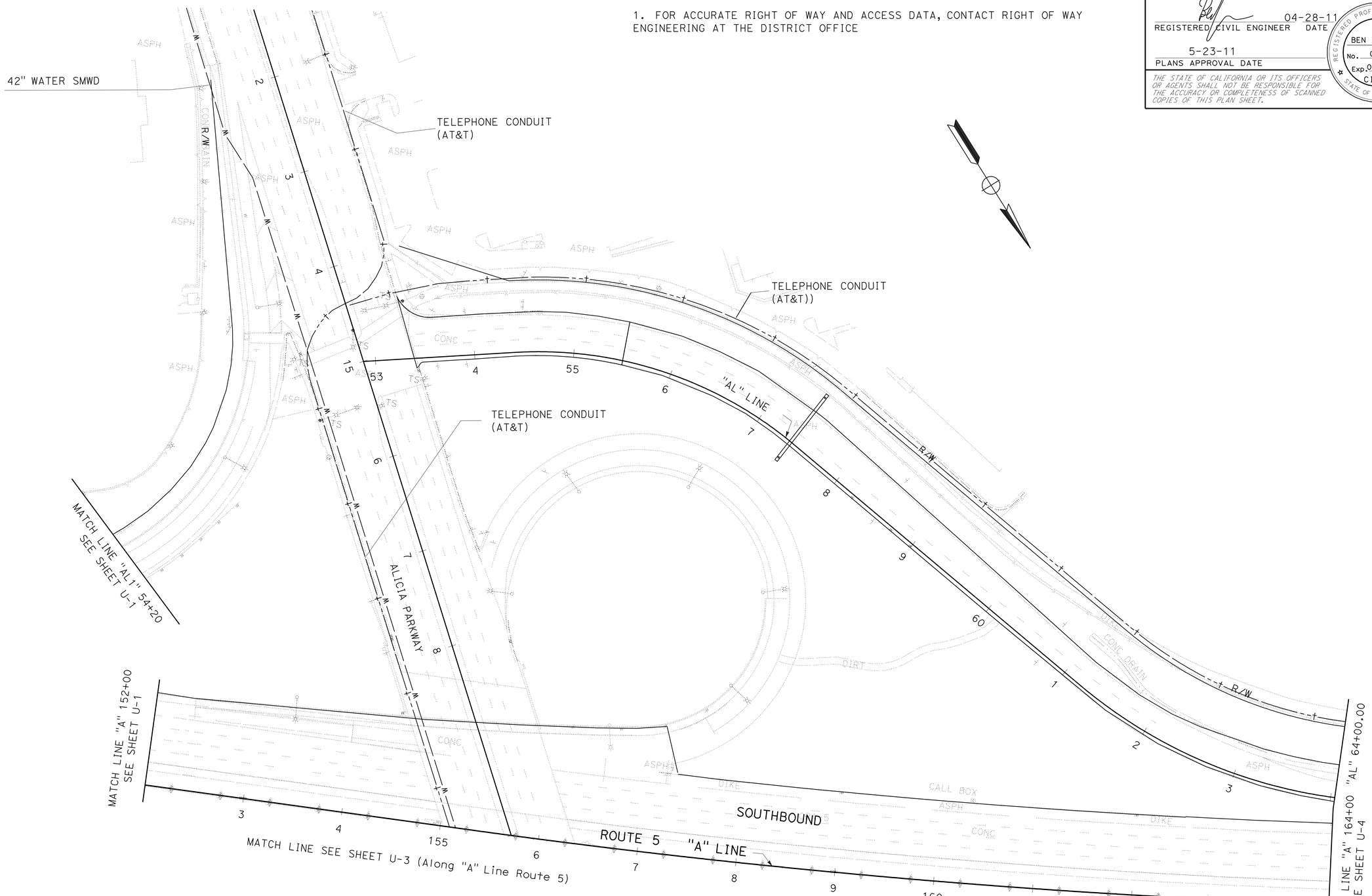

THIS PLAN ACCURATE FOR UTILITY INFORMATION ONLY

UTILITY PLAN

SCALE: 1"=50'

U-2

STATE OF CALIFORNIA - DEPARTMENT OF TRANSPORTATION
Caltrans® DESIGN DIVISION

FUNCTIONAL SUPERVISOR: KAMRAN MAZHAR
CALCULATED-DESIGNED BY: BEN IONESCU
CHECKED BY: DUNG PHAN
REVISED BY
DATE REVISED

LAST REVISION 11-29-10
DATE PLOTTED => 26-AUG-2011
TIME PLOTTED => 10:45

Dist	COUNTY	ROUTE	POST MILES TOTAL PROJECT	SHEET No.	TOTAL SHEETS
12	Ora	5	17.1/17.8	12	81

REGISTERED CIVIL ENGINEER 04-28-11 DATE

5-23-11
PLANS APPROVAL DATE

REGISTERED PROFESSIONAL ENGINEER
BEN IONESCU
No. C65482
Exp. 09-30-11
CIVIL
STATE OF CALIFORNIA

THE STATE OF CALIFORNIA OR ITS OFFICERS OR AGENTS SHALL NOT BE RESPONSIBLE FOR THE ACCURACY OR COMPLETENESS OF SCANNED COPIES OF THIS PLAN SHEET.

NOTES:

1. FOR ACCURATE RIGHT OF WAY AND ACCESS DATA, CONTACT RIGHT OF WAY ENGINEERING AT THE DISTRICT OFFICE

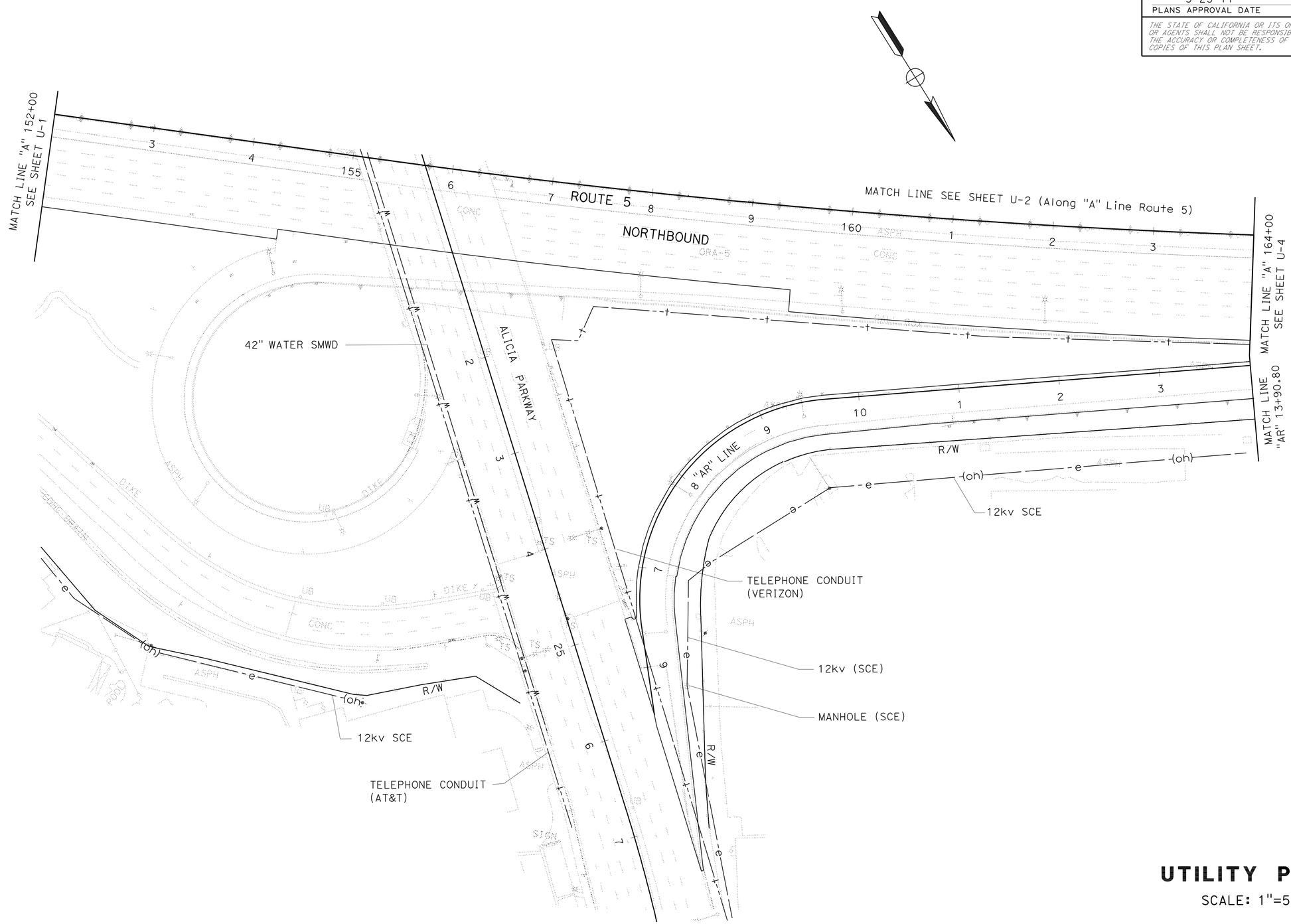

UTILITY PLAN

SCALE: 1"=50'

U-3

THIS PLAN ACCURATE FOR UTILITY INFORMATION ONLY

STATE OF CALIFORNIA - DEPARTMENT OF TRANSPORTATION
Caltrans
DESIGN DIVISION

FUNCTIONAL SUPERVISOR: KAMRAN MAZHAR
CALCULATED-DESIGNED BY: BEN IONESCU
CHECKED BY: DUNG PHAN
REVISED BY
DATE REVISED

LAST REVISION 11-22-10
DATE PLOTTED => 26-AUG-2011
TIME PLOTTED => 10:45

Dist	COUNTY	ROUTE	POST MILES TOTAL PROJECT	SHEET No.	TOTAL SHEETS
12	Ora	5	17.1/17.8	13	81

REGISTERED CIVIL ENGINEER 04-28-11 DATE

5-23-11
PLANS APPROVAL DATE

REGISTERED PROFESSIONAL ENGINEER
BEN IONESCU
No. C65482
Exp. 09-30-11
CIVIL
STATE OF CALIFORNIA

THE STATE OF CALIFORNIA OR ITS OFFICERS OR AGENTS SHALL NOT BE RESPONSIBLE FOR THE ACCURACY OR COMPLETENESS OF SCANNED COPIES OF THIS PLAN SHEET.

NOTES:

1. FOR ACCURATE RIGHT OF WAY AND ACCESS DATA, CONTACT RIGHT OF WAY ENGINEERING AT THE DISTRICT OFFICE

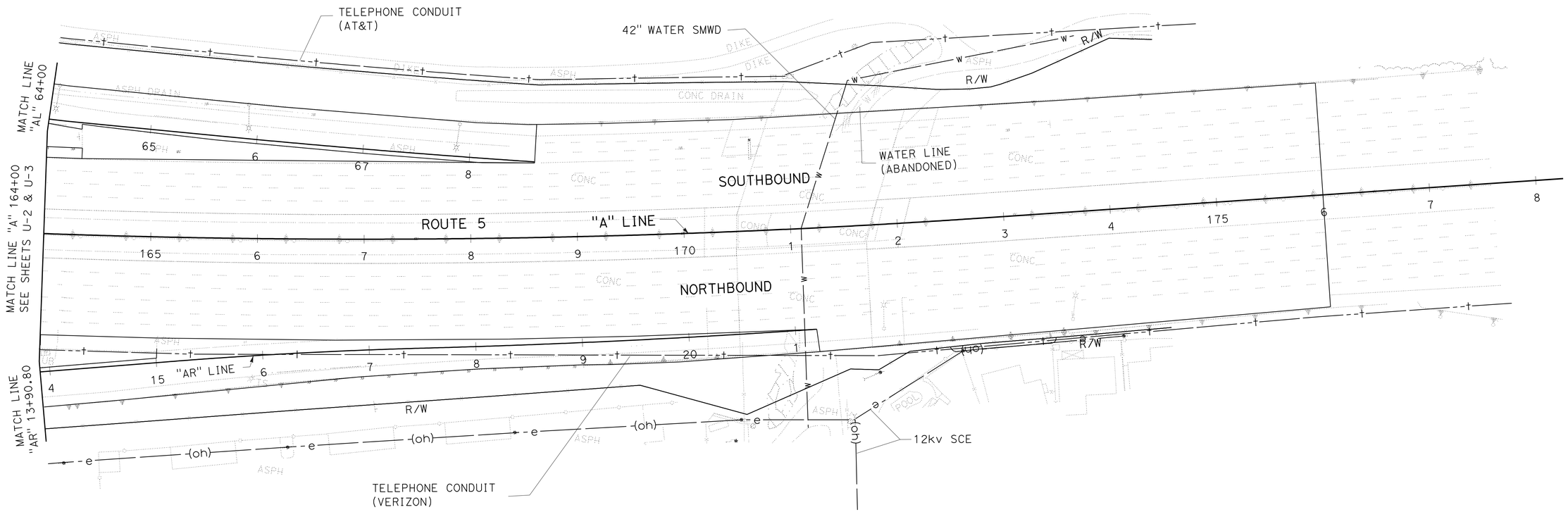

UTILITY PLAN

SCALE: 1"=50'

U-4

THIS PLAN ACCURATE FOR UTILITY INFORMATION ONLY

STATE OF CALIFORNIA - DEPARTMENT OF TRANSPORTATION
Caltrans® DESIGN DIVISION

FUNCTIONAL SUPERVISOR: KAMRAN MAZHAR
CALCULATED-DESIGNED BY: BEN IONESCU
CHECKED BY: DUNG PHAN
REVISED BY
DATE REVISED

LAST REVISION 01-31-11
DATE PLOTTED => 26-AUG-2011
TIME PLOTTED => 10:45

Dist	COUNTY	ROUTE	POST MILES TOTAL PROJECT	SHEET No.	TOTAL SHEETS
12	Ora	5	17.1/17.8	14	81

REGISTERED CIVIL ENGINEER 04-28-11 DATE

5-23-11
PLANS APPROVAL DATE

REGISTERED PROFESSIONAL ENGINEER
BEN IONESCU
No. C65482
Exp. 09-30-11
CIVIL
STATE OF CALIFORNIA

THE STATE OF CALIFORNIA OR ITS OFFICERS OR AGENTS SHALL NOT BE RESPONSIBLE FOR THE ACCURACY OR COMPLETENESS OF SCANNED COPIES OF THIS PLAN SHEET.

STATIONARY MOUNTED CONSTRUCTION AREA SIGNS

SIGN No.	SIGN CODE	PANEL SIZE	SIGN MESSAGE	No. OF POST AND SIZE	No. OF SIGNS
1	W20-1	72" x 72"	ROAD WORK AHEAD	2- 6" x 6"	2
2	W20-1	48" x 48"	ROAD WORK AHEAD	1- 4" x 6"	3
3	G20-2	60" x 24"	END ROAD WORK	2- 4" x 4"	3

FOR ADDITIONAL CONSTRUCTION AREA SIGNS, SEE TRAFFIC HANDLING PLANS

NOTE:

1. SIGN LOCATIONS SHOWN ARE APPROXIMATE
   EXACT LOCATIONS TO BE DETERMINED BY THE ENGINEER.

LEGEND:

- X — CONSTRUCTION AREA SIGN
- CONSTRUCTION AREA
- CONSTRUCTION AREA SIGN, 1-POST
- CONSTRUCTION AREA SIGN, 2-POST

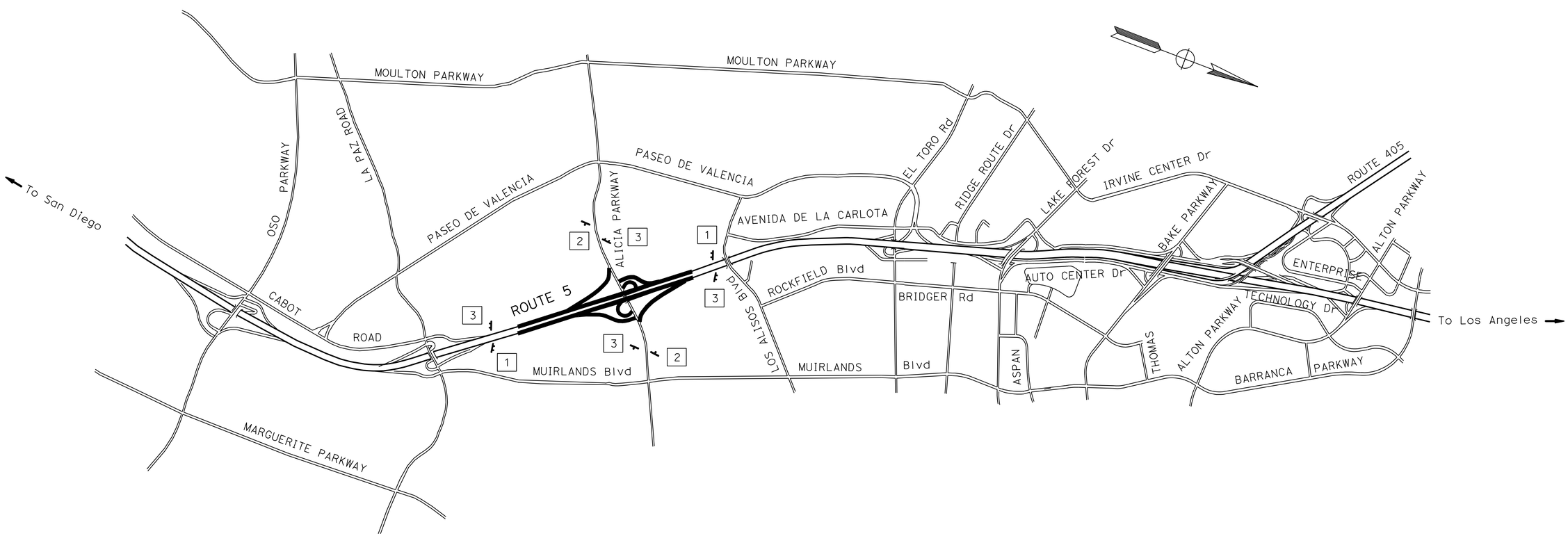

CONSTRUCTION AREA SIGNS

NO SCALE

CS-1

THIS PLAN ACCURATE FOR CONSTRUCTION AREA SIGN WORK ONLY

STATE OF CALIFORNIA - DEPARTMENT OF TRANSPORTATION
Caltrans® DESIGN DIVISION

FUNCTIONAL SUPERVISOR: KAMRAN MAZHAR
CALCULATED-DESIGNED BY: BEN IONESCU
CHECKED BY: DUNG PHAN
REVISED BY
DATE REVISED

LAST REVISION 11-22-10 | DATE PLOTTED => 26-AUG-2011 | TIME PLOTTED => 10:45

Dist	COUNTY	ROUTE	POST MILES TOTAL PROJECT	SHEET No.	TOTAL SHEETS
12	Ora	5	17.0/17.8	15	81

REGISTERED CIVIL ENGINEER 04-28-11 DATE

5-23-11
PLANS APPROVAL DATE

REGISTERED PROFESSIONAL ENGINEER
BEN IONESCU
No. C65482
Exp 09-30-11
CIVIL
STATE OF CALIFORNIA

THE STATE OF CALIFORNIA OR ITS OFFICERS OR AGENTS SHALL NOT BE RESPONSIBLE FOR THE ACCURACY OR COMPLETENESS OF SCANNED COPIES OF THIS PLAN SHEET.

LEGEND:

- CHANNELIZER (SURFACE MOUNTED)
- CONSTRUCTION AREA SIGN (1 POST)
- CONSTRUCTION AREA SIGN (2 POST)
- CONSTRUCT THIS STAGE
- TEMPORARY CRASH CUSHION MODULE, ARRAY PER PLAN
- CHANGE OF PAVEMENT DELINEATION DETAIL
- DIRECTION OF TRAFFIC
- CURVE DATA No.
- PAINT TRAFFIC STRIPE (2-COAT) DETAIL No.

NOTES:

1. FOR ACCURATE RIGHT OF WAY AND ACCESS DATA, CONTACT RIGHT OF WAY ENGINEERING AT THE DISTRICT OFFICE
2. 20:1 TAPER SHALL BE USED AT THE END OF ALL TEMPORARY RAILING UNLESS OTHERWISE NOTED.
3. ALL CONFLICTING STRIPING AND PAVEMENT MARKING SHALL BE REMOVED PRIOR TO EACH STAGE.

ABBREVIATION:

HOV - HIGH OCCUPANCY VEHICLE

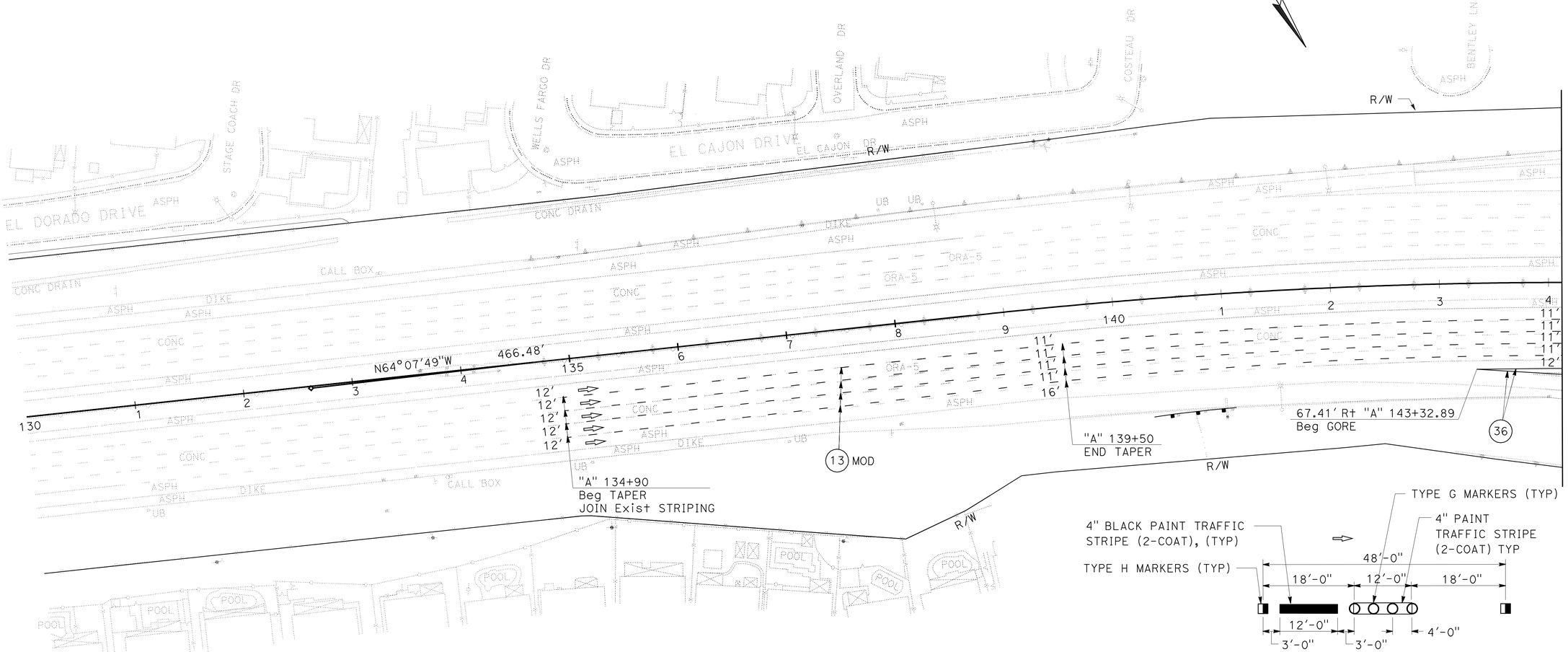

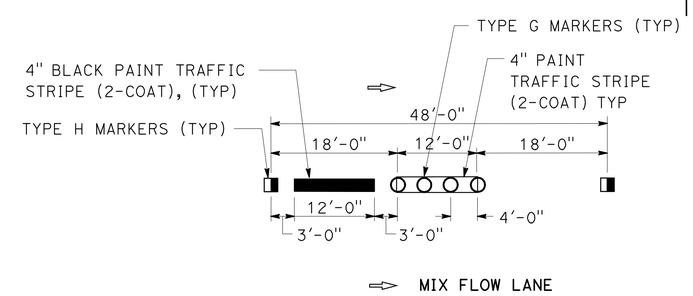

⇨ MIX FLOW LANE

DETAIL 13 MOD

STAGE 1
STAGE CONSTRUCTION
TRAFFIC HANDLING PLAN

SCALE: 1"=50'

SC-1

THIS PLAN ACCURATE FOR STAGE CONSTRUCTION WORK ONLY

REVISED BY	DATE REVISED

CALCULATED-DESIGNED BY: BEN IONESCU
CHECKED BY: DUNG PHAN
FUNCTIONAL SUPERVISOR: KAMRAN MAZHAR

STATE OF CALIFORNIA - DEPARTMENT OF TRANSPORTATION
Caltrans
DESIGN DIVISION

LAST REVISION 02-01-11
DATE PLOTTED => 26-AUG-2011
TIME PLOTTED => 10:45

Dist	COUNTY	ROUTE	POST MILES TOTAL PROJECT	SHEET No.	TOTAL SHEETS
12	Ora	5	17.1/17.8	16	81

REGISTERED CIVIL ENGINEER 04-28-11 DATE

5-23-11
PLANS APPROVAL DATE

REGISTERED PROFESSIONAL ENGINEER
BEN IONESCU
No. C65482
Exp. 09-30-11
CIVIL
STATE OF CALIFORNIA

THE STATE OF CALIFORNIA OR ITS OFFICERS OR AGENTS SHALL NOT BE RESPONSIBLE FOR THE ACCURACY OR COMPLETENESS OF SCANNED COPIES OF THIS PLAN SHEET.

NOTES:

1. FOR ACCURATE RIGHT OF WAY AND ACCESS DATA, CONTACT RIGHT OF WAY ENGINEERING AT THE DISTRICT OFFICE

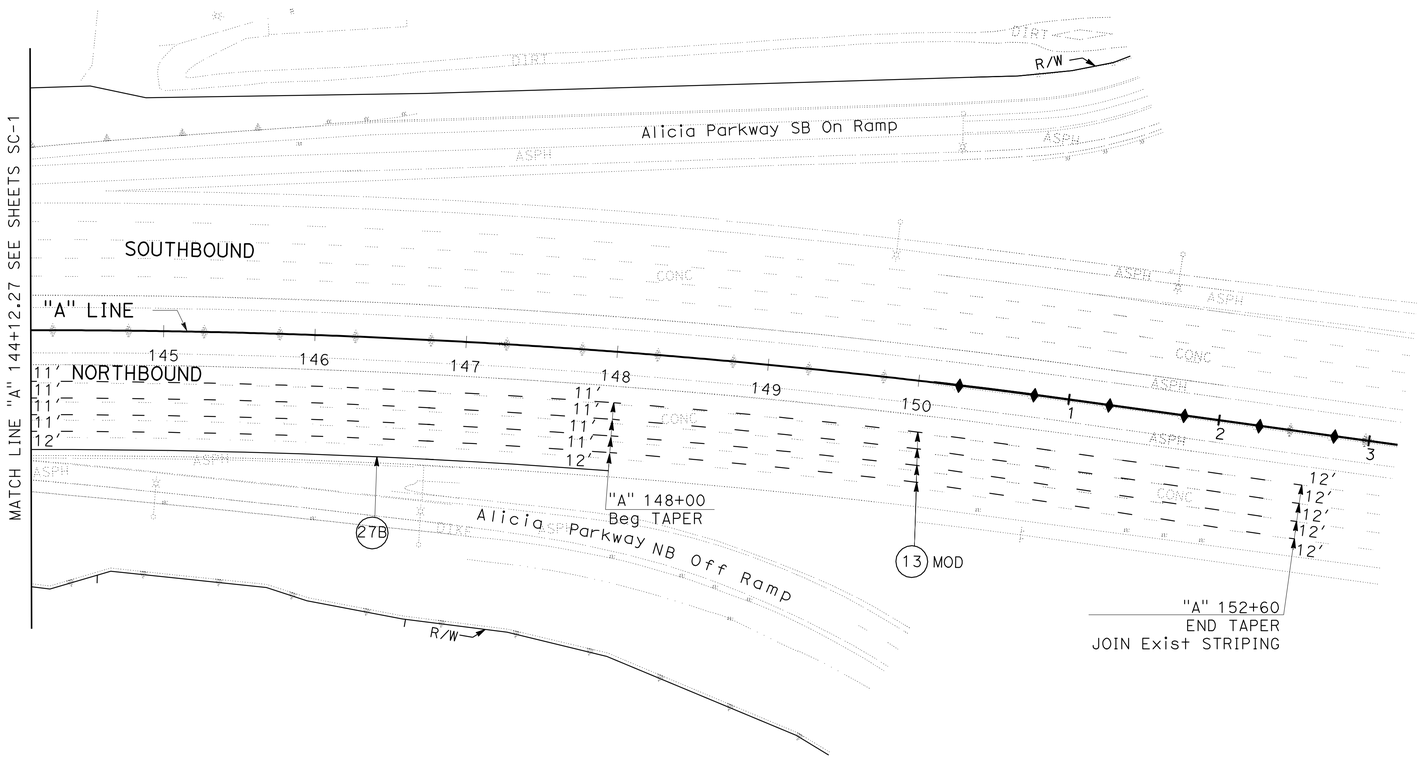

STAGE 1
STAGE CONSTRUCTION
TRAFFIC HANDLING PLAN

SCALE: 1"=50'

SC-2

THIS PLAN ACCURATE FOR STAGE CONSTRUCTION WORK ONLY

REVISED BY	DATE REVISED
BEN IONESCU	
DUNG PHAN	

CALCULATED-DESIGNED BY
CHECKED BY

FUNCTIONAL SUPERVISOR
KAMRAN MAZHAR

STATE OF CALIFORNIA - DEPARTMENT OF TRANSPORTATION
Caltrans
DESIGN DIVISION

LAST REVISION 02-01-11
DATE PLOTTED => 26-AUG-2011
TIME PLOTTED => 10:45

Dist	COUNTY	ROUTE	POST MILES TOTAL PROJECT	SHEET No.	TOTAL SHEETS
12	Ora	5	17.1/17.8	17	81

REGISTERED CIVIL ENGINEER 04-28-11 DATE

5-23-11
PLANS APPROVAL DATE

REGISTERED PROFESSIONAL ENGINEER
BEN IONESCU
No. C65482
Exp. 09-30-11
CIVIL
STATE OF CALIFORNIA

THE STATE OF CALIFORNIA OR ITS OFFICERS OR AGENTS SHALL NOT BE RESPONSIBLE FOR THE ACCURACY OR COMPLETENESS OF SCANNED COPIES OF THIS PLAN SHEET.

NOTES:

1. FOR ACCURATE RIGHT OF WAY AND ACCESS DATA, CONTACT RIGHT OF WAY ENGINEERING AT THE DISTRICT OFFICE

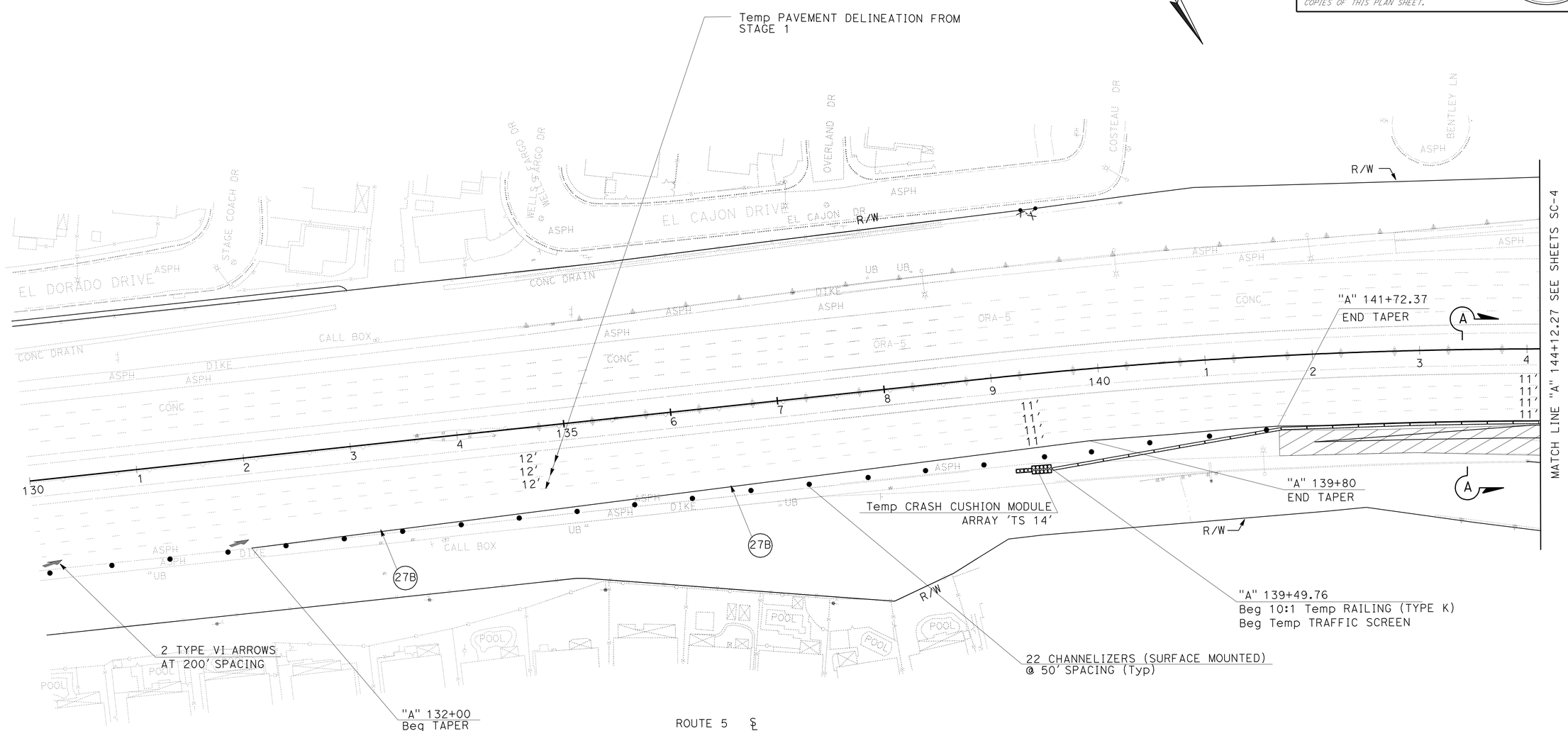

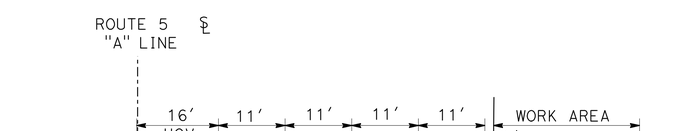

SECTION A-A
No Scale

STAGE 2
STAGE CONSTRUCTION
TRAFFIC HANDLING PLAN

SCALE: 1"=50'

SC-3

THIS PLAN ACCURATE FOR STAGE CONSTRUCTION WORK ONLY

STATE OF CALIFORNIA - DEPARTMENT OF TRANSPORTATION
Caltrans® DESIGN DIVISION

FUNCTIONAL SUPERVISOR: KAMRAN MAZHAR
CALCULATED-DESIGNED BY: BEN IONESCU
CHECKED BY: DUNG PHAN
REVISED BY
DATE REVISED

LAST REVISION 02-01-11
DATE PLOTTED => 26-AUG-2011
TIME PLOTTED => 10:45

Dist	COUNTY	ROUTE	POST MILES TOTAL PROJECT	SHEET No.	TOTAL SHEETS
12	Ora	5	17.1/17.8	18	81

REGISTERED CIVIL ENGINEER 04-28-11 DATE

5-23-11
PLANS APPROVAL DATE

REGISTERED PROFESSIONAL ENGINEER
BEN IONESCU
No. C65482
Exp. 09-30-11
CIVIL
STATE OF CALIFORNIA

THE STATE OF CALIFORNIA OR ITS OFFICERS OR AGENTS SHALL NOT BE RESPONSIBLE FOR THE ACCURACY OR COMPLETENESS OF SCANNED COPIES OF THIS PLAN SHEET.

GENERAL NOTES - ALL STAGES:

1. FOR ACCURATE RIGHT OF WAY AND ACCESS DATA, CONTACT RIGHT OF WAY ENGINEERING AT THE DISTRICT OFFICE

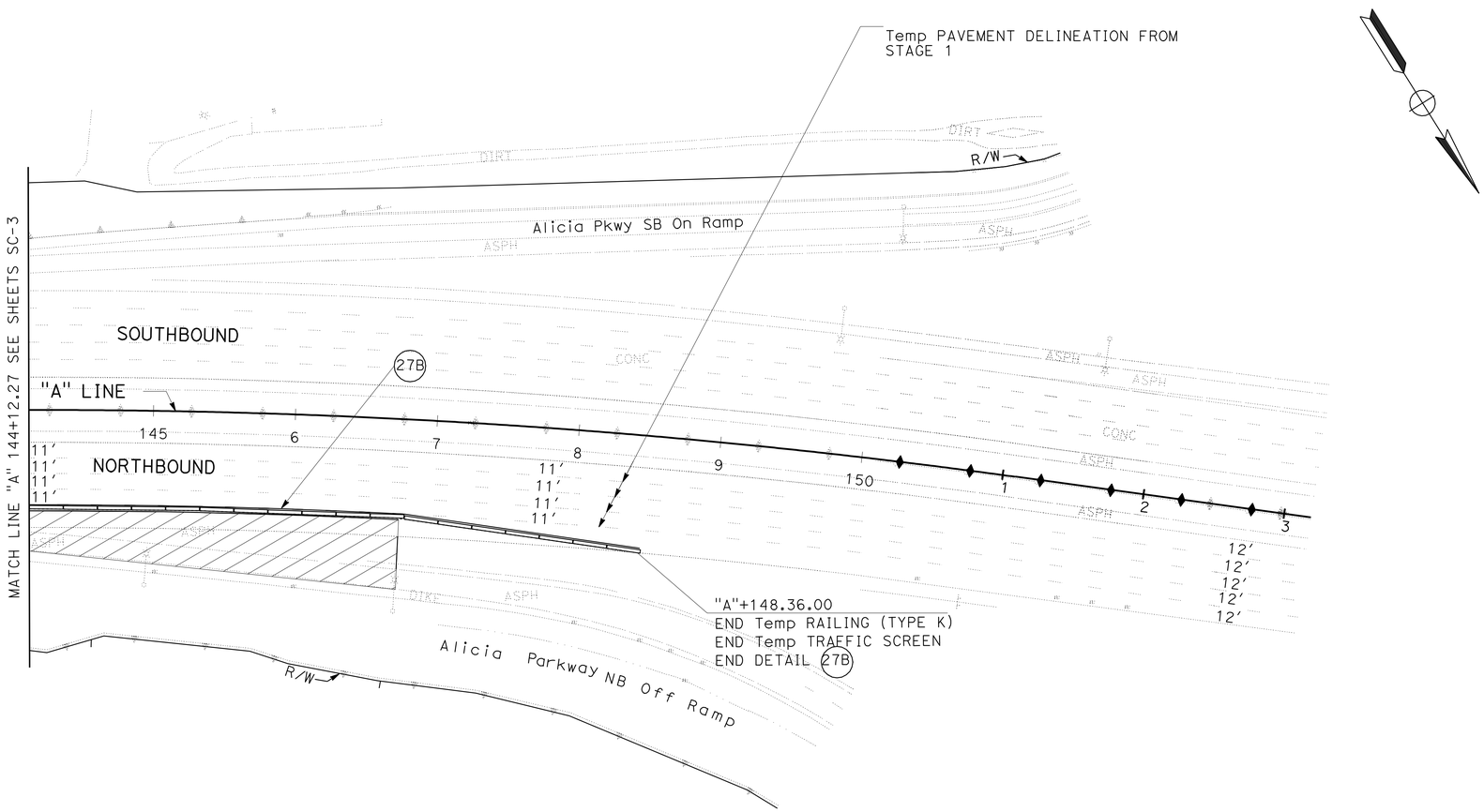

STAGE 2
STAGE CONSTRUCTION
TRAFFIC HANDLING PLAN

SCALE: 1"=50′

SC-4

THIS PLAN ACCURATE FOR STAGE CONSTRUCTION WORK ONLY

STATE OF CALIFORNIA - DEPARTMENT OF TRANSPORTATION
Caltrans® DESIGN DIVISION

FUNCTIONAL SUPERVISOR: KAMRAN MAZHAR
CALCULATED-DESIGNED BY: BEN IONESCU
CHECKED BY: DUNG PHAN
REVISED BY
DATE REVISED

LAST REVISION 02-01-11
DATE PLOTTED => 26-AUG-2011
TIME PLOTTED => 10:45

Dist	COUNTY	ROUTE	POST MILES TOTAL PROJECT	SHEET No.	TOTAL SHEETS
12	Ora	5	17.1/17.8	19	81

REGISTERED CIVIL ENGINEER 04-28-11 DATE

5-23-11
PLANS APPROVAL DATE

REGISTERED PROFESSIONAL ENGINEER
BEN IONESCU
No. C65482
Exp. 09-30-11
CIVIL
STATE OF CALIFORNIA

THE STATE OF CALIFORNIA OR ITS OFFICERS OR AGENTS SHALL NOT BE RESPONSIBLE FOR THE ACCURACY OR COMPLETENESS OF SCANNED COPIES OF THIS PLAN SHEET.

GENERAL NOTES - ALL STAGES:

1. FOR ACCURATE RIGHT OF WAY AND ACCESS DATA, CONTACT RIGHT OF WAY ENGINEERING AT THE DISTRICT OFFICE

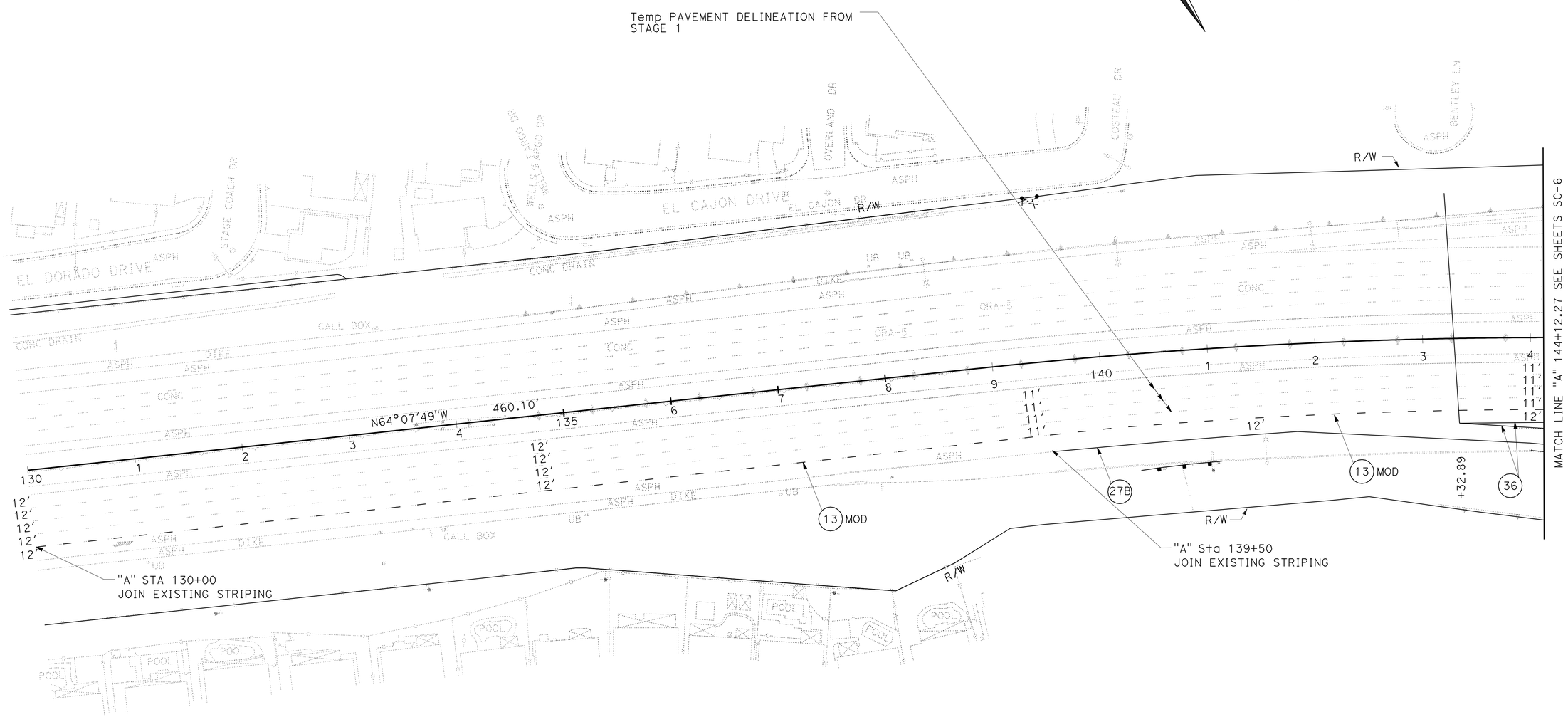

STAGE 3
STAGE CONSTRUCTION TRAFFIC HANDLING PLAN

SCALE: 1"=50'

SC-5

THIS PLAN ACCURATE FOR STAGE CONSTRUCTION WORK ONLY

STATE OF CALIFORNIA - DEPARTMENT OF TRANSPORTATION
Caltrans® DESIGN DIVISION

FUNCTIONAL SUPERVISOR: KAMRAN MAZHAR
CALCULATED-DESIGNED BY: BEN IONESCU
CHECKED BY: DUNG PHAN
REVISED BY
DATE REVISED

LAST REVISION 02-01-11
DATE PLOTTED => 26-AUG-2011
TIME PLOTTED => 10:45

Dist	COUNTY	ROUTE	POST MILES TOTAL PROJECT	SHEET No.	TOTAL SHEETS
12	Ora	5	17.1/17.8	20	81

REGISTERED CIVIL ENGINEER 04-28-11 DATE

5-23-11
PLANS APPROVAL DATE

REGISTERED PROFESSIONAL ENGINEER
BEN IONESCU
No. C65482
Exp. 09-30-11
CIVIL
STATE OF CALIFORNIA

THE STATE OF CALIFORNIA OR ITS OFFICERS OR AGENTS SHALL NOT BE RESPONSIBLE FOR THE ACCURACY OR COMPLETENESS OF SCANNED COPIES OF THIS PLAN SHEET.

GENERAL NOTES - ALL STAGES:

1. FOR ACCURATE RIGHT OF WAY AND ACCESS DATA, CONTACT RIGHT OF WAY ENGINEERING AT THE DISTRICT OFFICE

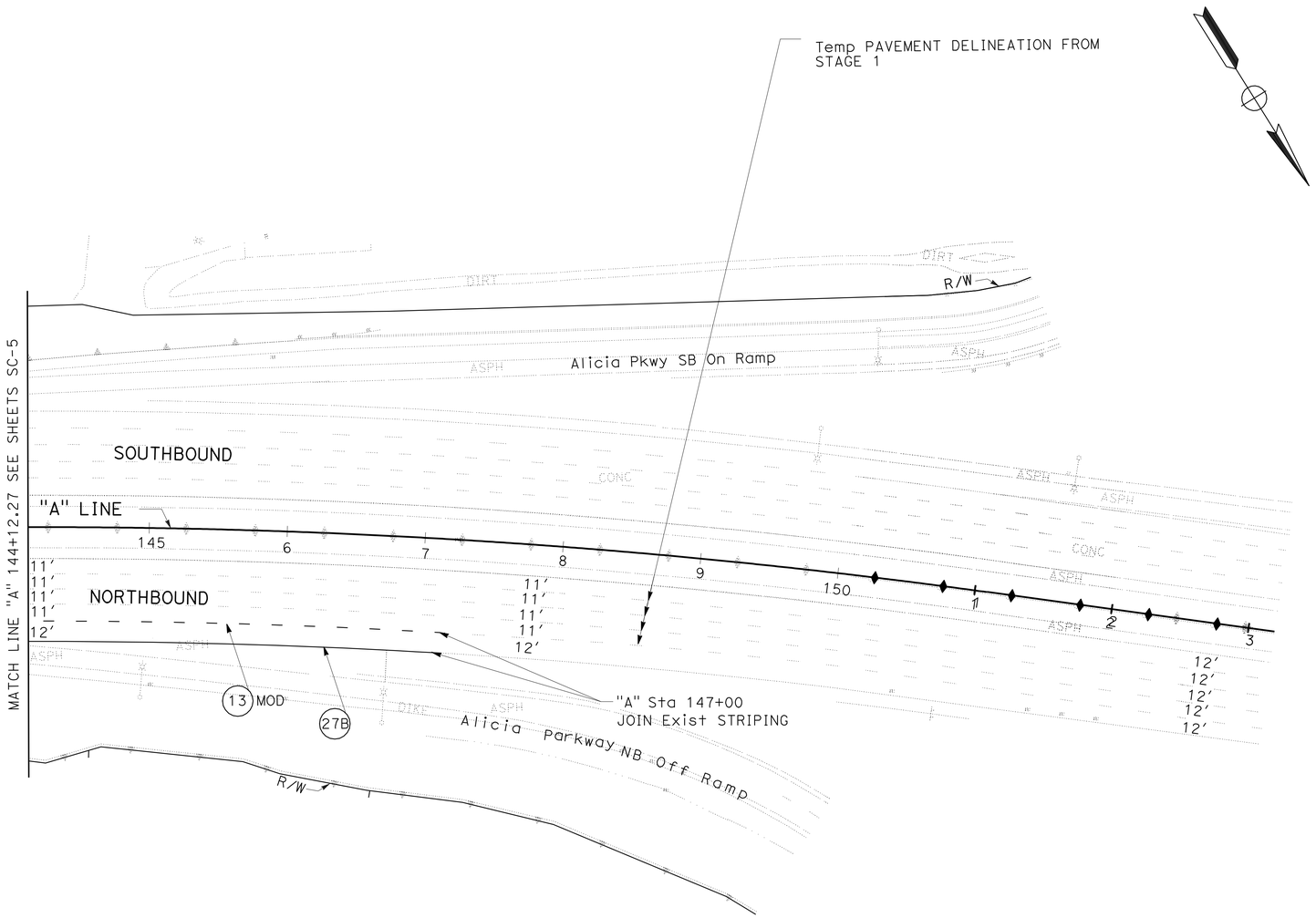

STAGE 3
STAGE CONSTRUCTION TRAFFIC HANDLING PLAN

SCALE: 1"=50'

THIS PLAN ACCURATE FOR STAGE CONSTRUCTION WORK ONLY

SC-6

REVISED BY	DATE REVISED
BEN IONESCU	
DUNG PHAN	
CALCULATED-DESIGNED BY	
CHECKED BY	
FUNCTIONAL SUPERVISOR	
KAMRAN MAZHAR	

STATE OF CALIFORNIA - DEPARTMENT OF TRANSPORTATION
Caltrans
DESIGN DIVISION

LAST REVISION 02-01-11
DATE PLOTTED => 26-AUG-2011
TIME PLOTTED => 10:45

Dist	COUNTY	ROUTE	POST MILES TOTAL PROJECT	SHEET No.	TOTAL SHEETS
12	Ora	5	17.1/17.8	21	81

REGISTERED CIVIL ENGINEER 04-28-11 DATE

5-23-11
PLANS APPROVAL DATE

REGISTERED PROFESSIONAL ENGINEER BEN IONESCU No. C65482 Exp. 09-30-11 CIVIL STATE OF CALIFORNIA

THE STATE OF CALIFORNIA OR ITS OFFICERS OR AGENTS SHALL NOT BE RESPONSIBLE FOR THE ACCURACY OR COMPLETENESS OF SCANNED COPIES OF THIS PLAN SHEET.

STAGE CONSTRUCTION QUANTITIES

SHEET NUMBER	STATION LIMITS	DETAIL	PAINT TRAFFIC STRIPE (2-COAT)				TEMPORARY PAVEMENT MARKING (PAINT)	PAVEMENT MARKER		TEMPORARY RAILING (TYPE K)	TEMPORARY TRAFFIC SCREEN	CHANNELIZER (SURFACE MOUNTED)	REMOVE PAINTED TRAFFIC STRIPE	REMOVE PAVEMENT MARKER	TEMPORARY CRASH CUSHION MODULE
			4" BROKEN WHITE	4" BROKEN BLACK	4" SOLID WHITE	8" SOLID WHITE	ARROWS	NON-REFLECTIVE TYPE A	RETRO REFLECTIVE TYPE G						
			LF	LF	LF	LF	SQFT	EA	EA	LF	LF	EA	LF	EA	EA
SC-1	"A" 134+90.00 TO "A" 144+12.27	13 Mod	3690	3690				308	78				1845	386	
SC-1	"A" 143+32.89 TO "A" 144+12.27	36				160			9				160	9	
SC-2	"A" 144+12.27 TO "A" 152+60.00	13 Mod	3392	3392				283	72				1696	355	
SC-2	"A" 144+12.27 TO "A" 148+00.00	27B			388								388		
SC-3	"A" 132+00.00 TO "A" 144+12.27	27B			1212								1212		
SC-3	"A" 139+49.76 TO "A" 144+12.27									463	463				
SC-3	"A" 139+49.76														14
SC-3	"A" 130+00.00 TO "A" 141+72.37						84					22			
SC-4	"A" 144+12.27 TO "A" 148+36.00	27B			317					424	424		317		
SC-5	"A" 130+00.00 TO "A" 144+12.27	13 Mod	1412	1412				118	31				706	149	
SC-5	"A" 143+32.89 TO "A" 144+12.27	36				160			9				160	9	
SC-5	"A" 139+50.00 TO "A" 144+12.27	27B			463								463		
SC-6	"A" 144+12.27 TO "A" 147+00.00	13 Mod	288	288				24	7				144	31	
SC-6	"A" 144+12.27 TO "A" 147+00.00	27B			288								288		
SUBTOTAL			8782	8782	2668	320	84	733	206	887	887	22	7379	939	14
TOTAL			20552				84	733	206	887	887	22	7379	939	14

FOR ADDITIONAL QUANTITIES SEE PAVEMENT DELINEATION QUANTITIES

STATE OF CALIFORNIA - DEPARTMENT OF TRANSPORTATION
Caltrans DESIGN DIVISION

FUNCTIONAL SUPERVISOR: KAMRAN MAZHAR
CALCULATED-DESIGNED BY: BEN IONESCU
CHECKED BY: DUNG PHAN
REVISED BY
DATE REVISED

STAGE CONSTRUCTION QUANTITIES

SCQ-1

LAST REVISION 11-23-10 | DATE PLOTTED => 26-AUG-2011 | TIME PLOTTED => 10:45

Dist	COUNTY	ROUTE	POST MILES TOTAL PROJECT	SHEET No.	TOTAL SHEETS
12	Ora	5	17.1/17.8	22	81

REGISTERED CIVIL ENGINEER 04-28-11 DATE

5-23-11
PLANS APPROVAL DATE

REGISTERED PROFESSIONAL ENGINEER BEN IONESCU No. C65482 Exp. 09-30-11 CIVIL STATE OF CALIFORNIA

THE STATE OF CALIFORNIA OR ITS OFFICERS OR AGENTS SHALL NOT BE RESPONSIBLE FOR THE ACCURACY OR COMPLETENESS OF SCANNED COPIES OF THIS PLAN SHEET.

NOTE:

1. LOCATIONS OF CONSTRUCTION AREA SIGNS (DETOUR) AND PCMS SHOWN ARE APPROXIMATE. EXACT LOCATIONS WILL BE DETERMINED BY THE ENGINEER.
2. EXACT MESSAGE TO BE DISPLAYED ON THE PCMS WILL BE DETERMINED BY THE ENGINEER IN COORDINATION WITH THE TRAFFIC MANAGEMENT.

LEGEND:

- DIRECTION OF TRAVEL THROUGH DETOUR
- CONSTRUCTION AREA SIGN (DETOUR), 1-POST
- PCMS-1 — PORTABLE CHANGEABLE MESSAGE SIGN
- (X) — CONSTRUCTION AREA SIGN (DETOUR)
- CONNECTORS OR RAMPS CLOSURE

ABBREVIATIONS:

PCMS : PORTABLE CHANGABLE MESSAGE SIGN

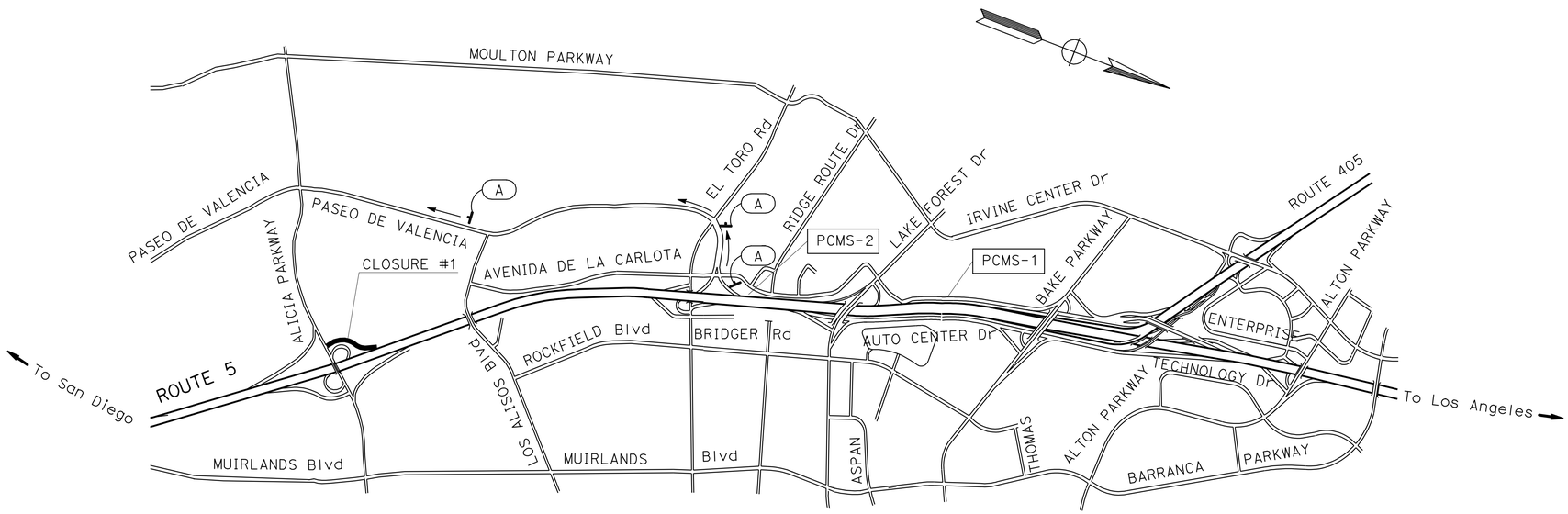

NOTES:

DURING THE SB ROUTE 5 ALICIA PARKWAY CLOSURE, THE PCMS SHOULD READ:

ALICIA PKWY CLOSED USE EL TORO	DETOUR ALICIA PKWY EXIT HERE
PCMS-1	PCMS-2

CLOSURE #1:

RAMP - ALICIA PARKWAY SB ROUTE 5 OFF-RAMP

DETOUR:

EXIT EL TORO, AND THRU TO PASEO DE VALENCIA

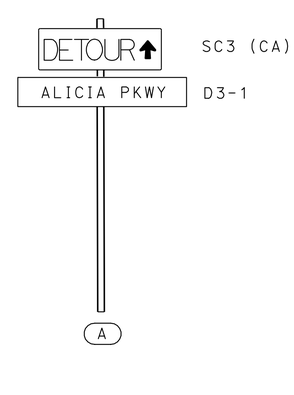

THIS PLAN ACCURATE FOR TRAFFIC HANDLING WORK ONLY

TRAFFIC HANDLING PLAN
(DETOUR)

NO SCALE

TH-1

STATE OF CALIFORNIA - DEPARTMENT OF TRANSPORTATION
Caltrans® DESIGN DIVISION

FUNCTIONAL SUPERVISOR: KAMRAN MAZHAR
CALCULATED-DESIGNED BY: BEN IONESCU
CHECKED BY: DUNG PHAN
REVISED BY
DATE REVISED

LAST REVISION 11-23-10
DATE PLOTTED => 26-AUG-2011
TIME PLOTTED => 10:45

Dist	COUNTY	ROUTE	POST MILES TOTAL PROJECT	SHEET No.	TOTAL SHEETS
12	Ora	5	17.1/17.8	23	81

REGISTERED CIVIL ENGINEER 04-28-11 DATE

5-23-11
PLANS APPROVAL DATE

REGISTERED PROFESSIONAL ENGINEER
BEN IONESCU
No. C65482
Exp. 09-30-11
CIVIL
STATE OF CALIFORNIA

THE STATE OF CALIFORNIA OR ITS OFFICERS OR AGENTS SHALL NOT BE RESPONSIBLE FOR THE ACCURACY OR COMPLETENESS OF SCANNED COPIES OF THIS PLAN SHEET.

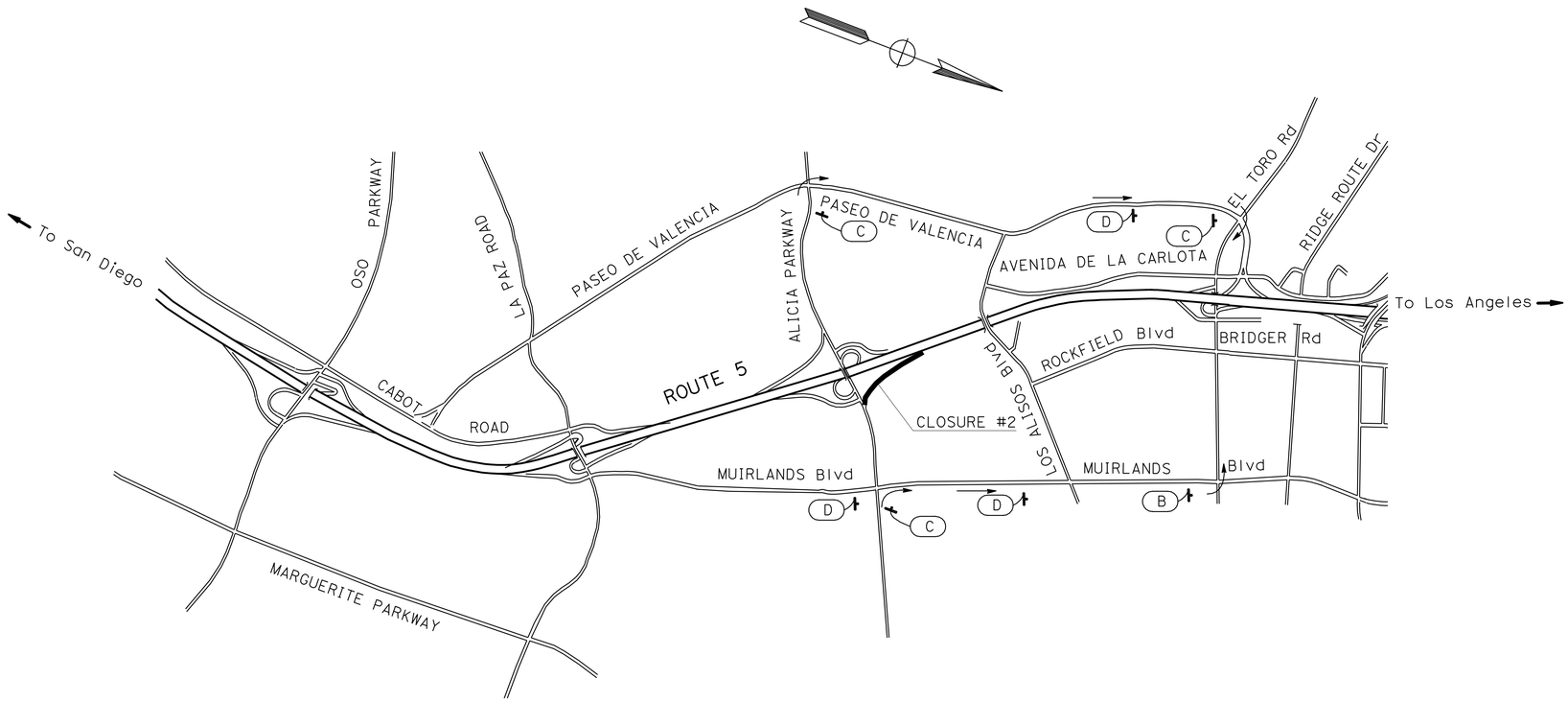

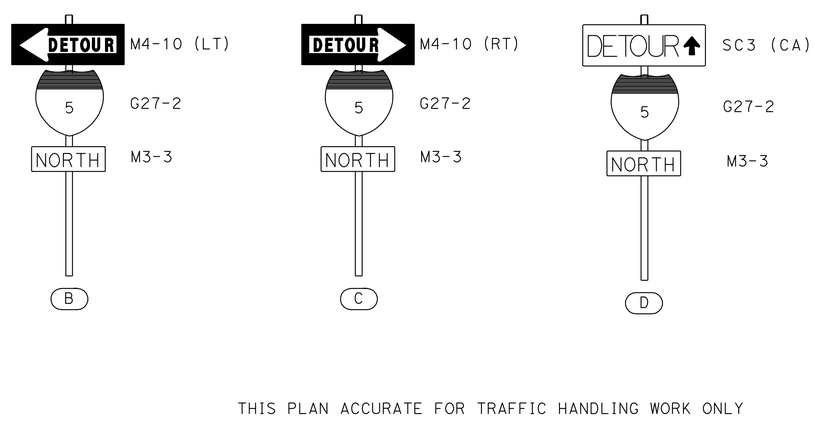

CLOSURE #2:

RAMP - WB ALICIA PARKWAY NB ROUTE 5 ON-RAMP

DETOUR:

NB MURILANDS Blvd, WB EL TORO

TRAFFIC HANDLING PLAN
(DETOUR)

NO SCALE

THIS PLAN ACCURATE FOR TRAFFIC HANDLING WORK ONLY

TH-2

STATE OF CALIFORNIA - DEPARTMENT OF TRANSPORTATION
Caltrans
DESIGN DIVISION

FUNCTIONAL SUPERVISOR: KAMRAN MAZHAR
CALCULATED-DESIGNED BY: BEN IONESCU
CHECKED BY: DUNG PHAN
REVISED BY
DATE REVISED

LAST REVISION 11-23-10
DATE PLOTTED => 26-AUG-2011
TIME PLOTTED => 10:45

Dist	COUNTY	ROUTE	POST MILES TOTAL PROJECT	SHEET No.	TOTAL SHEETS
12	Ora	5	17.1/17.8	24	81

REGISTERED CIVIL ENGINEER 04-28-11 DATE

5-23-11
PLANS APPROVAL DATE

REGISTERED PROFESSIONAL ENGINEER
BEN IONESCU
No. C65482
Exp. 09-30-11
CIVIL
STATE OF CALIFORNIA

THE STATE OF CALIFORNIA OR ITS OFFICERS OR AGENTS SHALL NOT BE RESPONSIBLE FOR THE ACCURACY OR COMPLETENESS OF SCANNED COPIES OF THIS PLAN SHEET.

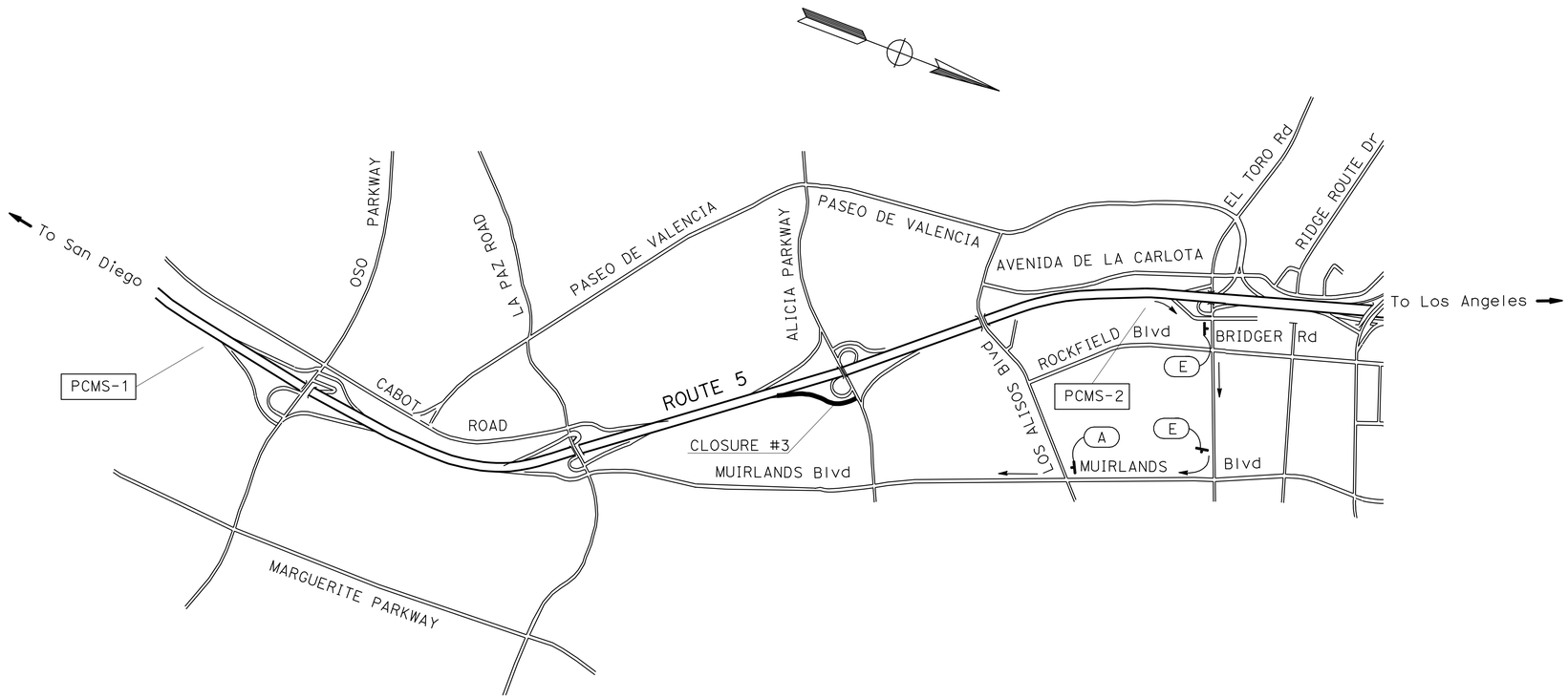

NOTES:

DURING THE NB ROUTE 5 ALICIA PARKWAY CLOSURE, THE PCMS SHOULD READ:

ALICIA PKWY CLOSED USE EL TORO	DETOUR ALICIA PKWY EXIT HERE
PCMS-1	PCMS-2

CLOSURE #3:

RAMP - ALICIA PARKWAY NB ROUTE 5 OFF-RAMP

DETOUR:

EXIT EL TORO, RIGHT ON EL TORO AND RIGHT ON MURILANDS

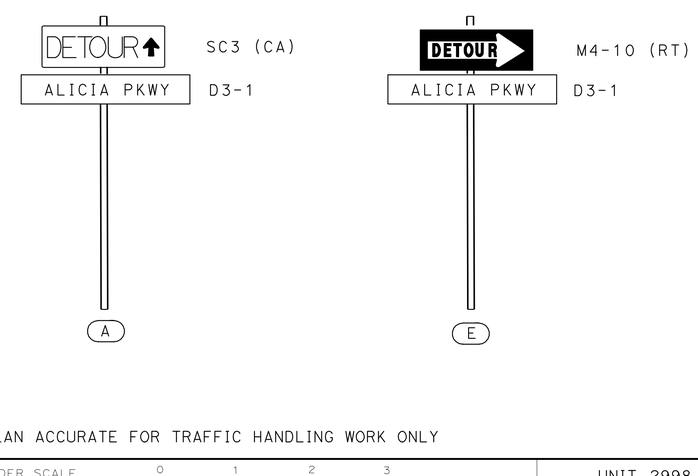

TRAFFIC HANDLING PLAN
(DETOUR)

NO SCALE

THIS PLAN ACCURATE FOR TRAFFIC HANDLING WORK ONLY

TH-3

STATE OF CALIFORNIA - DEPARTMENT OF TRANSPORTATION
Caltrans® DESIGN DIVISION

FUNCTIONAL SUPERVISOR: KAMRAN MAZHAR
CALCULATED-DESIGNED BY: BEN IONESCU
CHECKED BY: DUNG PHAN
REVISED BY
DATE REVISED

LAST REVISION 11-24-10
DATE PLOTTED => 26-AUG-2011
TIME PLOTTED => 10:45

Dist	COUNTY	ROUTE	POST MILES TOTAL PROJECT	SHEET No.	TOTAL SHEETS
12	Ora	5	17.1/17.8	25	81

REGISTERED CIVIL ENGINEER 04-28-11 DATE

5-23-11
PLANS APPROVAL DATE

REGISTERED PROFESSIONAL ENGINEER
BEN IONESCU
No. C65482
Exp. 09-30-11
CIVIL
STATE OF CALIFORNIA

THE STATE OF CALIFORNIA OR ITS OFFICERS OR AGENTS SHALL NOT BE RESPONSIBLE FOR THE ACCURACY OR COMPLETENESS OF SCANNED COPIES OF THIS PLAN SHEET.

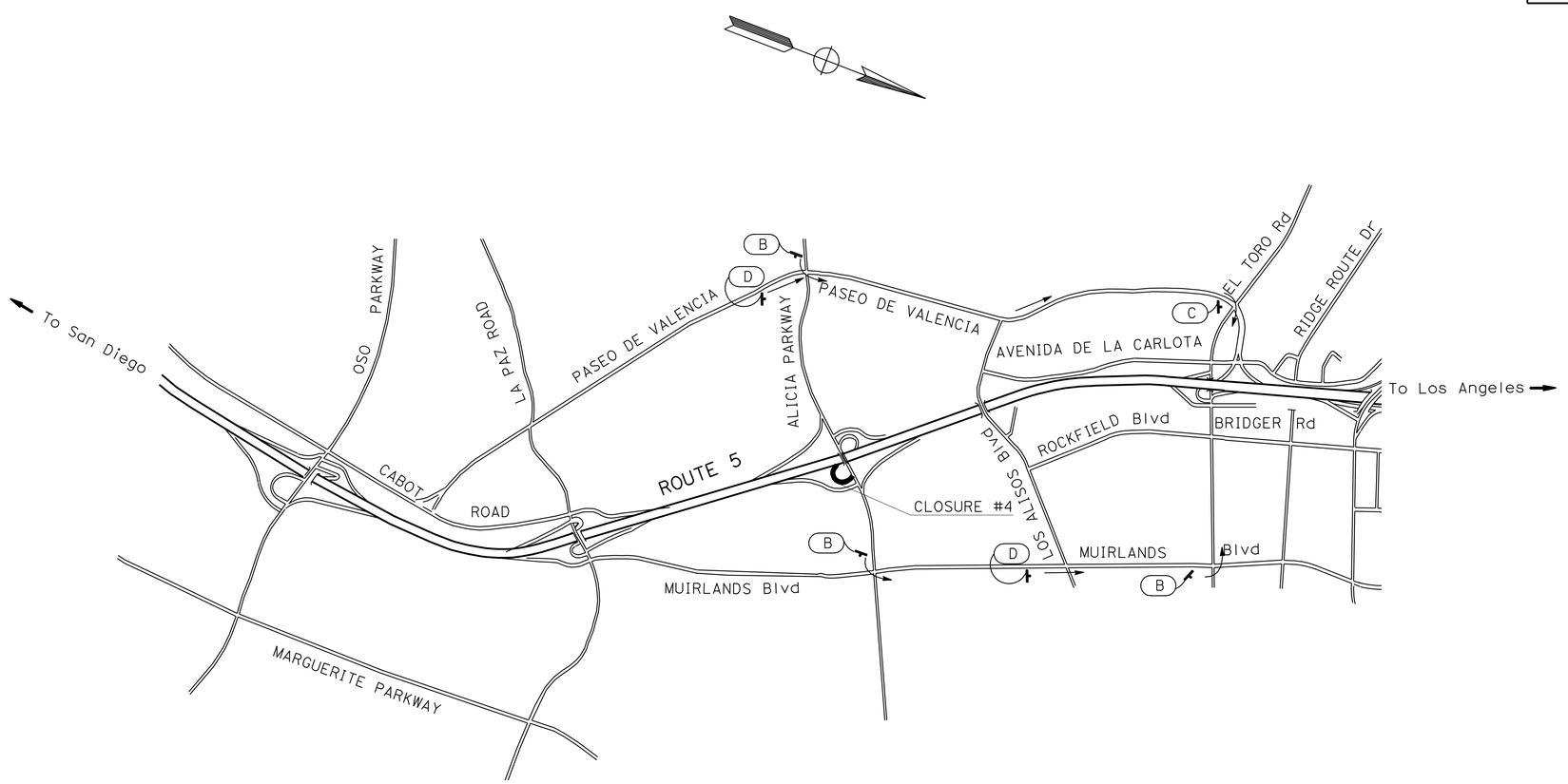

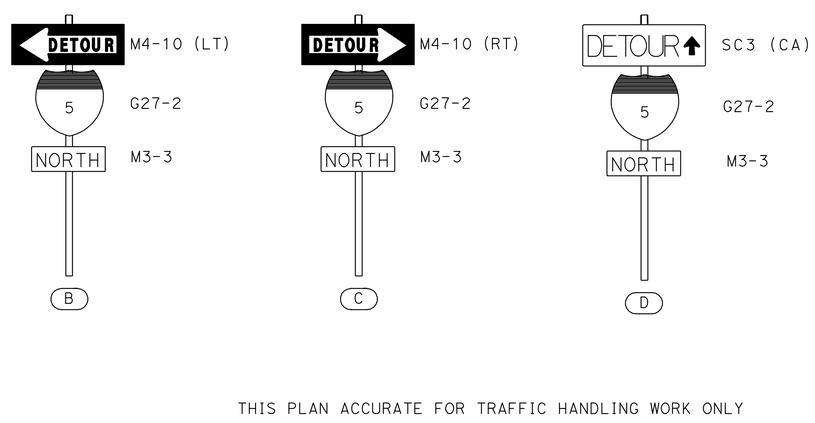

CLOSURE #4:

RAMP - EB ALICIA PARKWAY NB ROUTE 5 ON-RAMP

DETOUR:

NB PASEO DE VALENCIA, EB EL TORO

TRAFFIC HANDLING PLAN
(DETOUR)

NO SCALE

THIS PLAN ACCURATE FOR TRAFFIC HANDLING WORK ONLY

TH-4

STATE OF CALIFORNIA - DEPARTMENT OF TRANSPORTATION
Caltrans
DESIGN DIVISION

FUNCTIONAL SUPERVISOR: KAMRAN MAZHAR
CALCULATED-DESIGNED BY: BEN IONESCU
CHECKED BY: DUNG PHAN
REVISED BY
DATE REVISED

LAST REVISION 11-23-10
DATE PLOTTED => 26-AUG-2011
TIME PLOTTED => 10:45

Dist	COUNTY	ROUTE	POST MILES TOTAL PROJECT	SHEET No.	TOTAL SHEETS
12	Ora	5	17.1/17.8	26	81

REGISTERED CIVIL ENGINEER 04-28-11 DATE

5-23-11
PLANS APPROVAL DATE

REGISTERED PROFESSIONAL ENGINEER
BEN IONESCU
No. C65482
Exp. 09-30-11
CIVIL
STATE OF CALIFORNIA

THE STATE OF CALIFORNIA OR ITS OFFICERS OR AGENTS SHALL NOT BE RESPONSIBLE FOR THE ACCURACY OR COMPLETENESS OF SCANNED COPIES OF THIS PLAN SHEET.

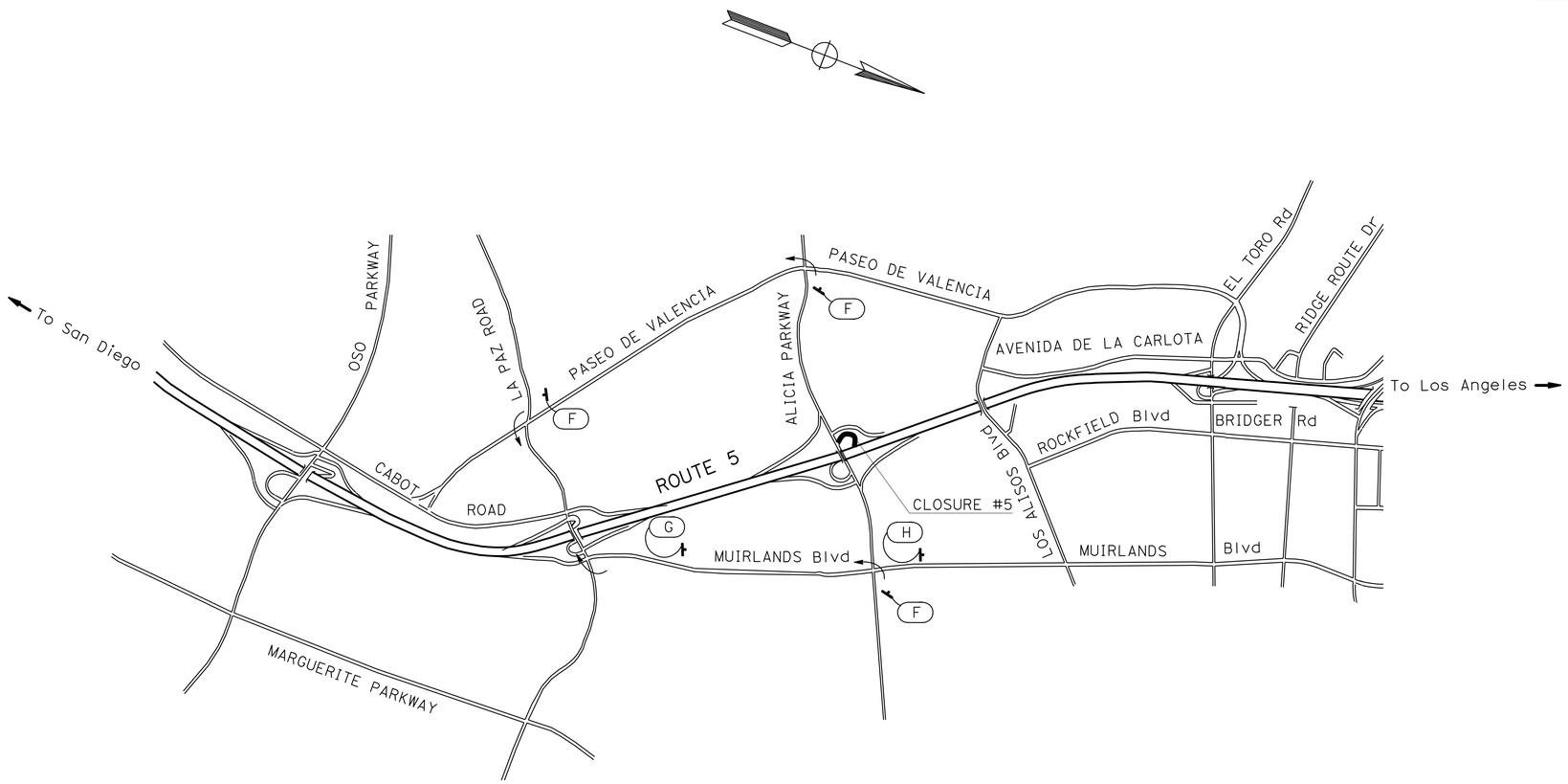

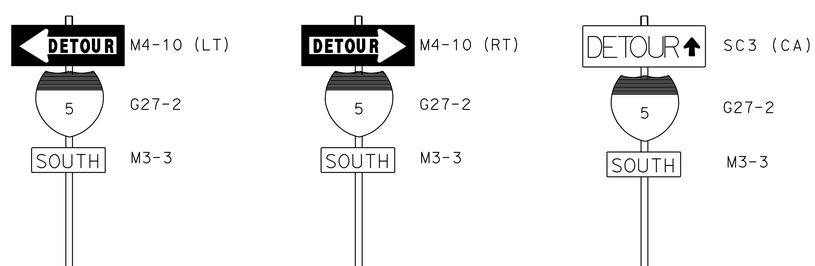

CLOSURE #5:

RAMP - WB ALICIA PARKWAY SB ROUTE 5 ON-RAMP

DETOUR:

SB MURILANDS Blvd, WB LA PAZ

TRAFFIC HANDLING PLAN
(DETOUR)

NO SCALE

THIS PLAN ACCURATE FOR TRAFFIC HANDLING WORK ONLY

TH-5

REVISED BY	DATE REVISED

CALCULATED-DESIGNED BY	CHECKED BY
BEN IONESCU	DUNG PHAN

FUNCTIONAL SUPERVISOR: KAMRAN MAZHAR

STATE OF CALIFORNIA - DEPARTMENT OF TRANSPORTATION
Caltrans
DESIGN DIVISION

LAST REVISION 11-23-10 | DATE PLOTTED => 26-AUG-2011 | TIME PLOTTED => 10:46

Dist	COUNTY	ROUTE	POST MILES TOTAL PROJECT	SHEET No.	TOTAL SHEETS
12	Ora	5	17.1/17.8	27	81

REGISTERED CIVIL ENGINEER DATE 04-28-11

5-23-11
PLANS APPROVAL DATE

REGISTERED PROFESSIONAL ENGINEER
BEN IONESCU
No. C65482
Exp. 09-30-11
CIVIL
STATE OF CALIFORNIA

THE STATE OF CALIFORNIA OR ITS OFFICERS OR AGENTS SHALL NOT BE RESPONSIBLE FOR THE ACCURACY OR COMPLETENESS OF SCANNED COPIES OF THIS PLAN SHEET.

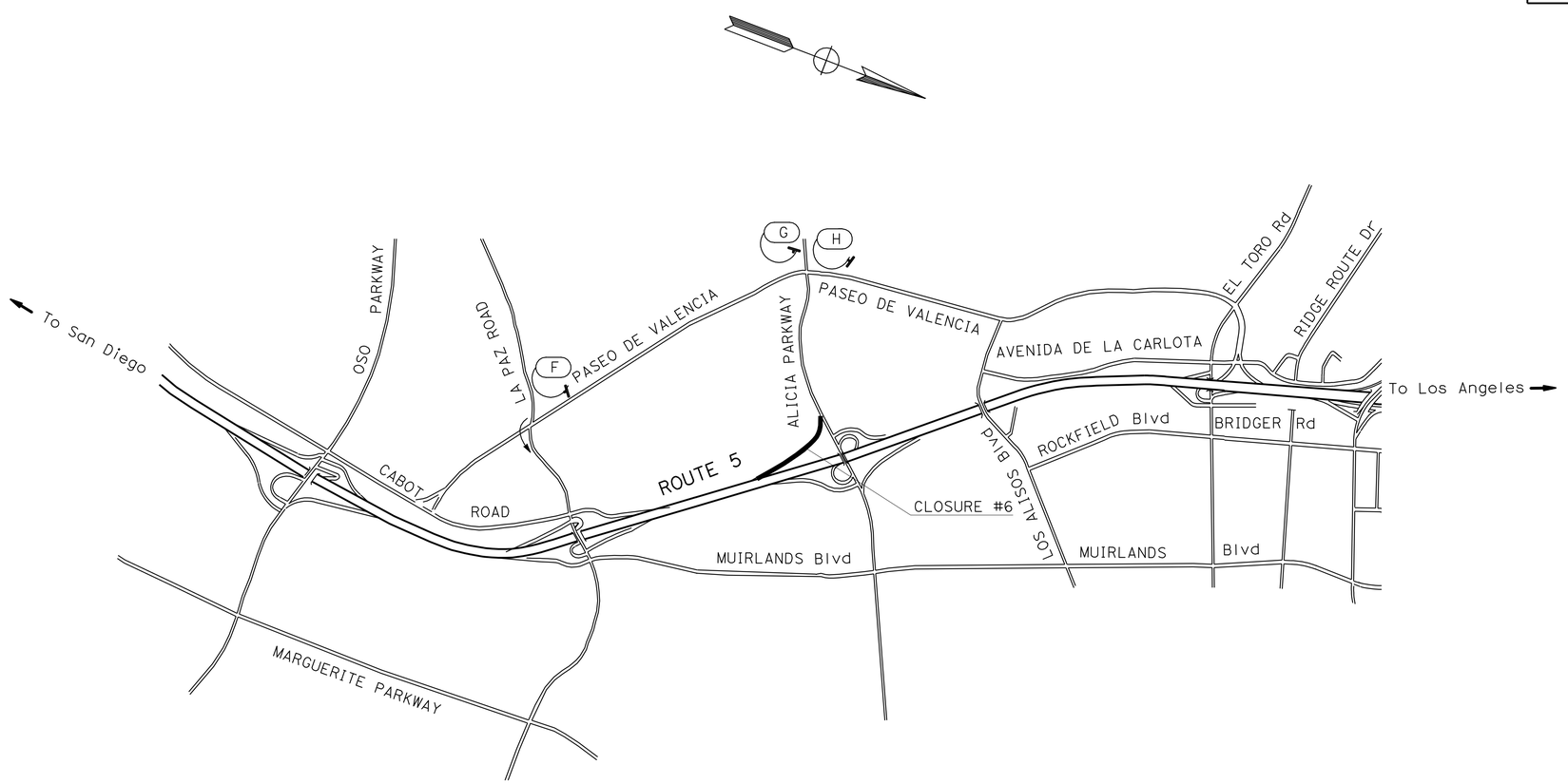

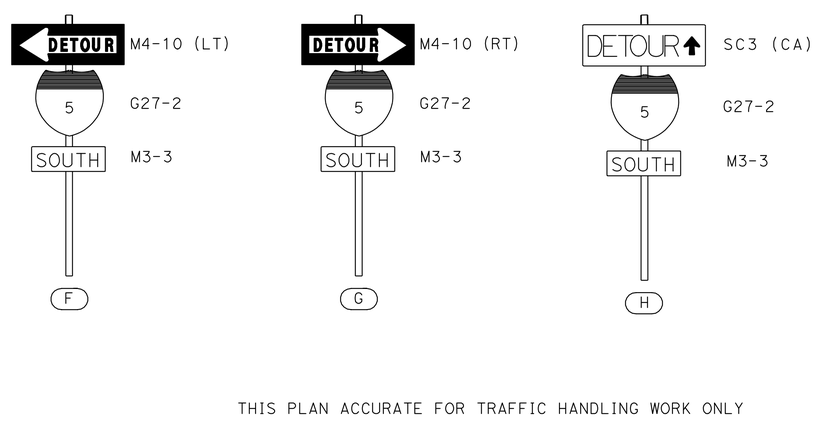

CLOSURE #6:

RAMP - EB ALICIA PARKWAY SB ROUTE 5 ON-RAMP

DETOUR:

SB PASEO DE VALENCIA, EB LA PAZ

TRAFFIC HANDLING PLAN
(DETOUR)

NO SCALE

THIS PLAN ACCURATE FOR TRAFFIC HANDLING WORK ONLY

TH-6

STATE OF CALIFORNIA - DEPARTMENT OF TRANSPORTATION
Caltrans
DESIGN DIVISION

FUNCTIONAL SUPERVISOR: KAMRAN MAZHAR
CALCULATED-DESIGNED BY: BEN IONESCU
CHECKED BY: DUNG PHAN
REVISED BY
DATE REVISED

LAST REVISION 11-23-10
DATE PLOTTED => 26-AUG-2011
TIME PLOTTED => 10:46

Dist	COUNTY	ROUTE	POST MILES TOTAL PROJECT	SHEET No.	TOTAL SHEETS
12	Ora	5	17.1/17.8	28	81

REGISTERED CIVIL ENGINEER 04-28-11 DATE

5-23-11
PLANS APPROVAL DATE

REGISTERED PROFESSIONAL ENGINEER
BEN IONESCU
No. C65482
Exp. 09-30-11
CIVIL
STATE OF CALIFORNIA

THE STATE OF CALIFORNIA OR ITS OFFICERS OR AGENTS SHALL NOT BE RESPONSIBLE FOR THE ACCURACY OR COMPLETENESS OF SCANNED COPIES OF THIS PLAN SHEET.

CONSTRUCTION AREA SIGNS (DETOUR)

SHEET No.	DETOUR SIGN TYPE	POST SIZE	No. OF SIGNS	No. OF POSTS	REMARKS
TH-1	A	4" × 6"	3	3	(S)
TH-2	B	4" × 6"	1	1	(S)
	C	4" × 6"	3	3	(S)
	D	4" × 6"	3	3	(S)
TH-3	A	4" × 6"	1	1	(S)
	E	4" × 6"	2	2	(S)
TH-4	B	4" × 6"	3	3	(S)
	C	4" × 6"	1	1	(S)
	D	4" × 6"	2	2	(S)
TH-5	F	4" × 6"	3	3	(S)
	G	4" × 6"	1	1	(S)
	H	4" × 6"	1	1	(S)
TH-6	F	4" × 6"	1	1	(S)
	G	4" × 6"	3	3	(S)
	H	4" × 6"	1	1	(S)

(S) DENOTES STATIONARY MOUNTED SIGN.

NOTES:

1. ALL SIGNS ARE STATIONARY MOUNTED. EXACT SIGN LOCATIONS TO BE DETERMINED BY THE ENGINEER.
2. FOR ADDITIONAL QUANTITIES OF CONSTRUCTION AREA SIGNS, SEE SHEET CS-1.

TRAFFIC HANDLING QUANTITIES

THQ-1

REVISED BY | DATE REVISED
BEN IONESCU | DUNG PHAN
CALCULATED-DESIGNED BY | CHECKED BY
FUNCTIONAL SUPERVISOR
KAMRAN MAZHAR

STATE OF CALIFORNIA - DEPARTMENT OF TRANSPORTATION
Caltrans® DESIGN DIVISION

LAST REVISION 11-24-10 | DATE PLOTTED => 26-AUG-2011 | TIME PLOTTED => 10:46

Dist	COUNTY	ROUTE	POST MILES TOTAL PROJECT	SHEET No.	TOTAL SHEETS
12	Ora	5	17.1/17.8	29	81

REGISTERED CIVIL ENGINEER 04-28-11 DATE

5-23-11
PLANS APPROVAL DATE

REGISTERED PROFESSIONAL ENGINEER
BEN IONESCU
No. C65482
Exp 09-30-11
CIVIL
STATE OF CALIFORNIA

THE STATE OF CALIFORNIA OR ITS OFFICERS OR AGENTS SHALL NOT BE RESPONSIBLE FOR THE ACCURACY OR COMPLETENESS OF SCANNED COPIES OF THIS PLAN SHEET.

NOTES:

1. FOR ACCURATE RIGHT OF WAY DATA AND ACCESS DATA, CONTACT RIGHT OF WAY ENGINEERING AT THE DISTRICT OFFICE.
2. ALL CONFLICTING STRIPING AND PAVEMENT MARKING SHALL BE REMOVED.
3. SIGN LOCATIONS SHOWN ARE APPROXIMATE, EXACT LOCATION OF ROADSIDE SIGNS WILL BE DETERMINED BY THE ENGINEER

ABBREVIATIONS:

HOV	HIGH OCCUPANCY VEHICLE
ISS	INSTALL SIGN STRUCTURE
SP	INSTALL SIGN (PEDESTRIAN BARRICADE), SEE ELECTRICAL PLANS
SM	INSTALL SIGN (MAST ARM MOUNTED), SEE ELECTRICAL PLANS
A	AHEAD
S	SIGNAL
C	CAR
P	POOL
O	ONLY

LEGEND:

(25)	DETAIL NUMBERS PER CALTRANS STANDARD PLANS A20-A, B, C & D
(13) MOD	DETAILS AS SHOWN ON SHEET PDD-1
(A)	DETAILS AS SHOWN ON SHEET PDD-1 (HOV LANE STRIPING)
(B)	DETAILS AS SHOWN ON SHEET PDD-1 (HOV LANE STRIPING)
	TRAFFIC DIRECTION
	CHANGE IN PAVEMENT DELINEATION DETAIL
F	DELINIATOR CLASS 1, TYPE F
G	DELINIATOR CLASS 1, TYPE G
GGR	GUARDRAILING DELINEATOR (CLASSI), TYPE G
	PEDESTRIAN BARRICADE, SEE ELECTRICAL PLANS
	MAST ARM MOUNTED SIGN, SEE ELECTRICAL PLANS
X	SIGN STRUCTURE IDENTIFICATION NO.
X-X	ROADSIDE SIGN (WITH NUMBER)

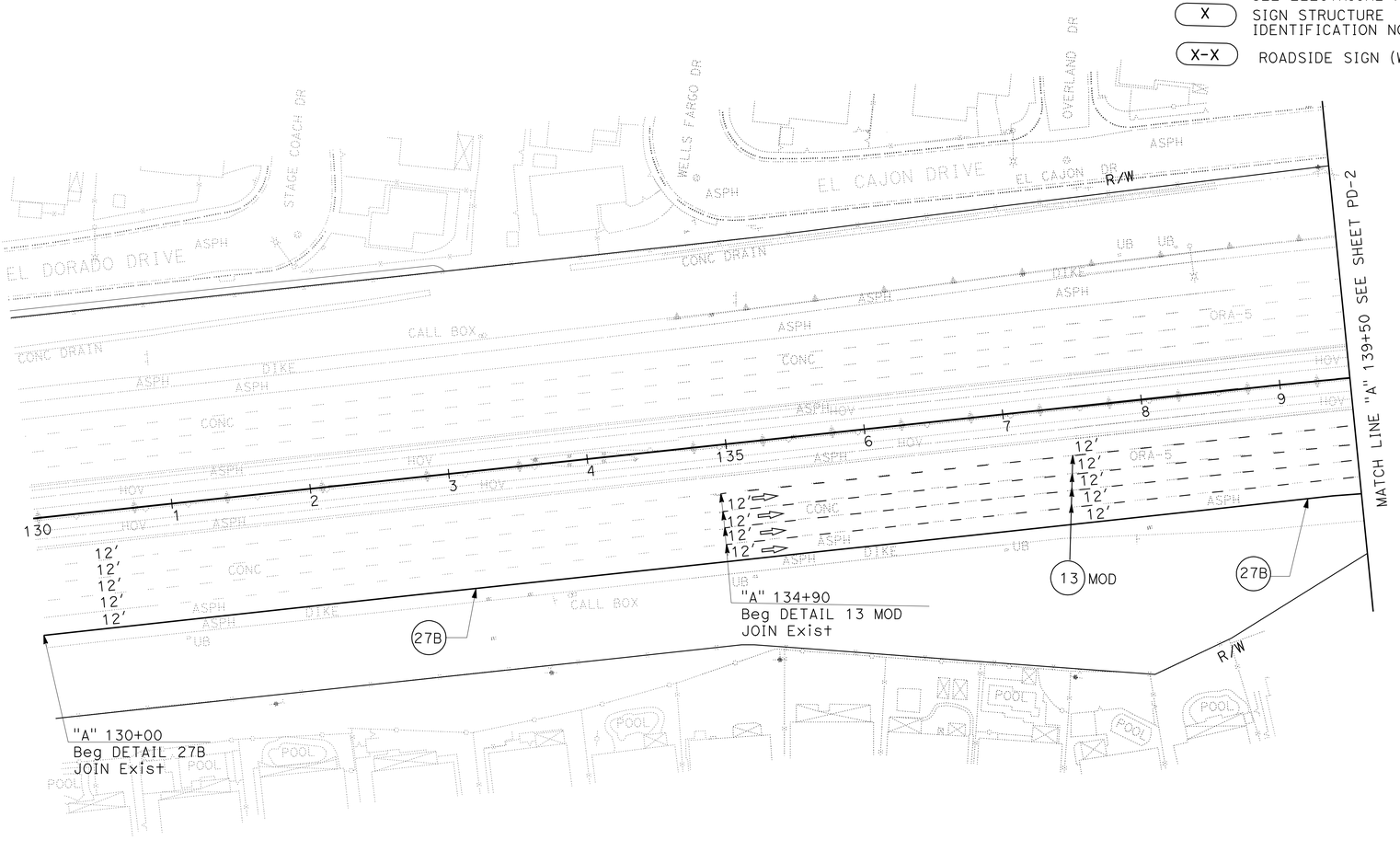

PAVEMENT DELINEATION AND SIGN PLAN

SCALE: 1"=50'

THIS PLAN ACCURATE FOR PAVEMENT DELINEATION WORK ONLY

PD-1

STATE OF CALIFORNIA - DEPARTMENT OF TRANSPORTATION
Caltrans® DESIGN DIVISION

FUNCTIONAL SUPERVISOR: KAMRAN MAZHAR
CALCULATED-DESIGNED BY: BEN IONESCU
CHECKED BY: DUNG PHAN
REVISED BY
DATE REVISED

LAST REVISION 02-01-11
DATE PLOTTED => 26-AUG-2011
TIME PLOTTED => 10:46

Dist	COUNTY	ROUTE	POST MILES TOTAL PROJECT	SHEET No.	TOTAL SHEETS
12	Ora	5	17.1/17.8	30	81

REGISTERED CIVIL ENGINEER DATE 04-28-11

5-23-11
PLANS APPROVAL DATE

REGISTERED PROFESSIONAL ENGINEER
BEN IONESCU
No. C65482
Exp. 09-30-11
CIVIL
STATE OF CALIFORNIA

THE STATE OF CALIFORNIA OR ITS OFFICERS OR AGENTS SHALL NOT BE RESPONSIBLE FOR THE ACCURACY OR COMPLETENESS OF SCANNED COPIES OF THIS PLAN SHEET.

NOTES:

1. FOR ACCURATE RIGHT OF WAY DATA AND ACCESS DATA, CONTACT RIGHT OF WAY ENGINEERING AT THE DISTRICT OFFICE.

LAGUNA HILLS

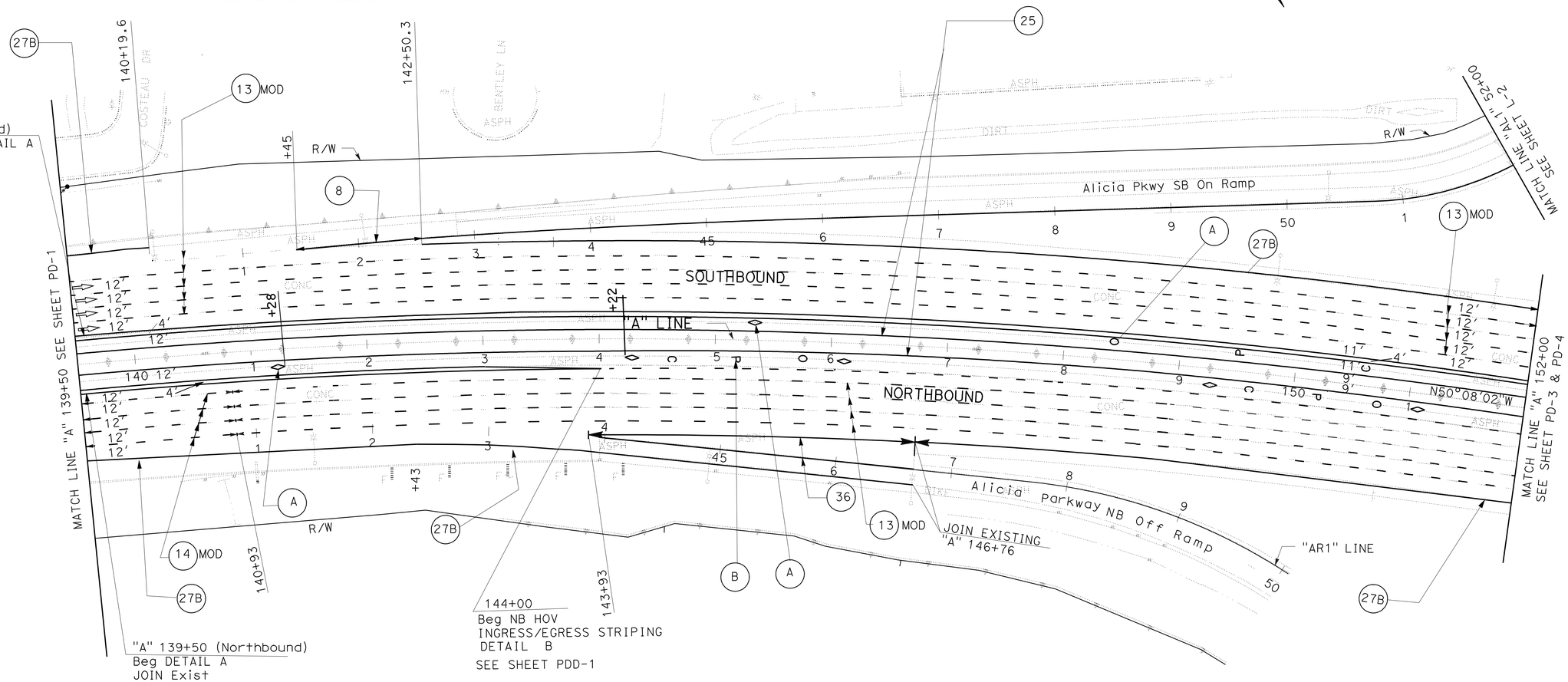

ORANGE COUNTY

THIS PLAN ACCURATE FOR PAVEMENT DELINEATION WORK ONLY

PAVEMENT DELINEATION AND SIGN PLAN

SCALE: 1"=50'

PD-2

REVISED BY	DATE REVISED
BEN IONESCU	DUNG PHAN
CALCULATED-DESIGNED BY	CHECKED BY
FUNCTIONAL SUPERVISOR	KAMRAN MAZHAR

STATE OF CALIFORNIA - DEPARTMENT OF TRANSPORTATION
Caltrans® DESIGN DIVISION

LAST REVISION 02-01-11 | DATE PLOTTED => 26-AUG-2011 | TIME PLOTTED => 10:46

Dist	COUNTY	ROUTE	POST MILES TOTAL PROJECT	SHEET No.	TOTAL SHEETS
12	Ora	5	17.1/17.8	31	81

REGISTERED CIVIL ENGINEER 04-28-11 DATE

5-23-11
PLANS APPROVAL DATE

REGISTERED PROFESSIONAL ENGINEER
BEN IONESCU
No. C65482
Exp. 09-30-11
CIVIL
STATE OF CALIFORNIA

THE STATE OF CALIFORNIA OR ITS OFFICERS OR AGENTS SHALL NOT BE RESPONSIBLE FOR THE ACCURACY OR COMPLETENESS OF SCANNED COPIES OF THIS PLAN SHEET.

NOTES:

1. FOR ACCURATE RIGHT OF WAY DATA AND ACCESS DATA, CONTACT RIGHT OF WAY ENGINEERING AT THE DISTRICT OFFICE.

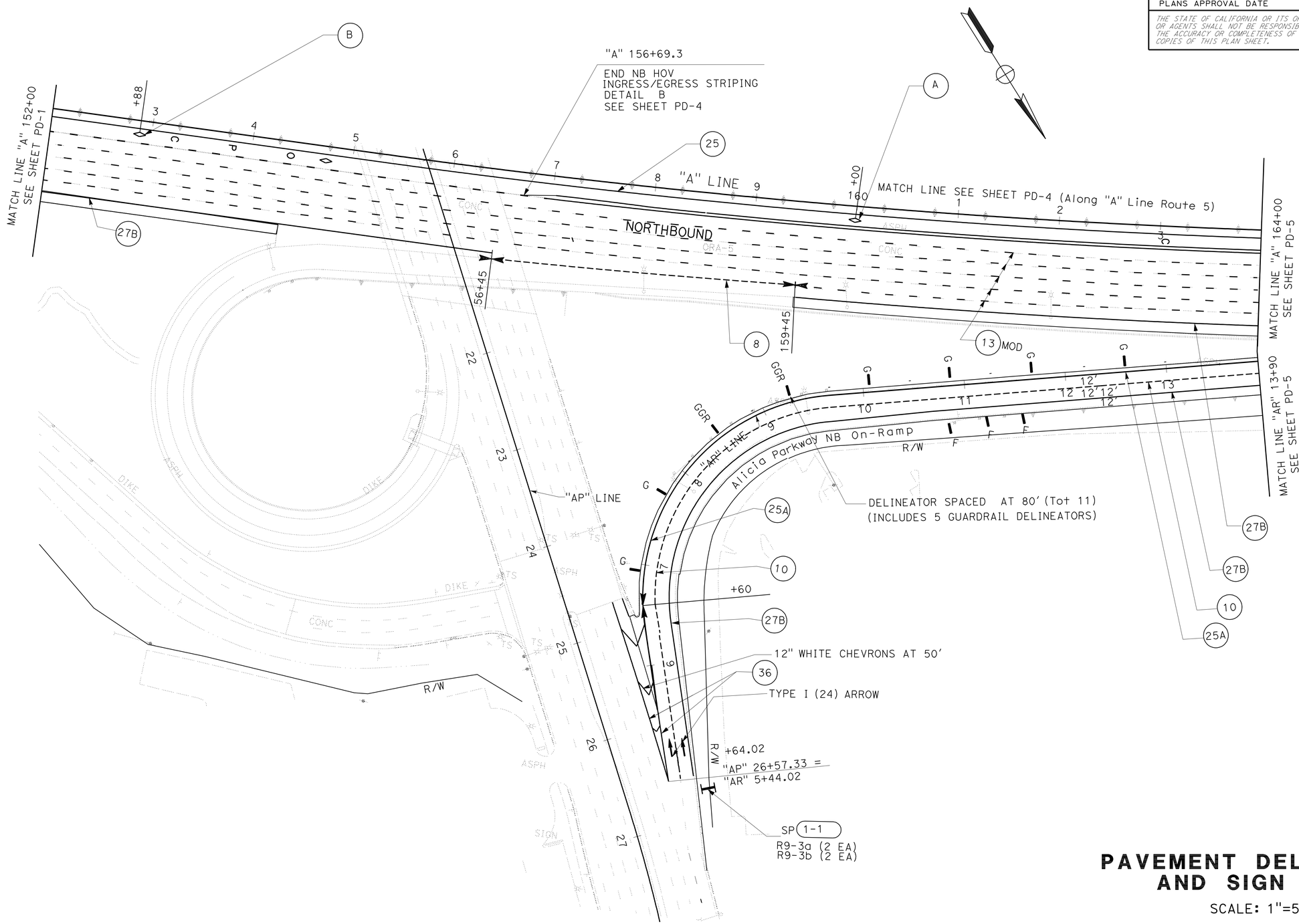

THIS PLAN ACCURATE FOR PAVEMENT DELINEATION WORK ONLY

PAVEMENT DELINEATION AND SIGN PLAN

SCALE: 1"=50'

PD-3

REVISED BY	DATE REVISED
BEN IONESCU	DUNG PHAN
CALCULATED-DESIGNED BY	CHECKED BY
FUNCTIONAL SUPERVISOR	KAMRAN MAZHAR

STATE OF CALIFORNIA - DEPARTMENT OF TRANSPORTATION
Caltrans
DESIGN DIVISION

LAST REVISION 11-29-10
DATE PLOTTED => 26-AUG-2011
TIME PLOTTED => 10:46

Dist	COUNTY	ROUTE	POST MILES TOTAL PROJECT	SHEET No.	TOTAL SHEETS
12	Ora	5	17.1/17.8	32	81

REGISTERED CIVIL ENGINEER 04-28-11 DATE

5-23-11
PLANS APPROVAL DATE

REGISTERED PROFESSIONAL ENGINEER
BEN IONESCU
No. C65482
Exp. 09-30-11
CIVIL
STATE OF CALIFORNIA

THE STATE OF CALIFORNIA OR ITS OFFICERS OR AGENTS SHALL NOT BE RESPONSIBLE FOR THE ACCURACY OR COMPLETENESS OF SCANNED COPIES OF THIS PLAN SHEET.

NOTES:

1. FOR ACCURATE RIGHT OF WAY DATA AND ACCESS DATA, CONTACT RIGHT OF WAY ENGINEERING AT THE DISTRICT OFFICE.

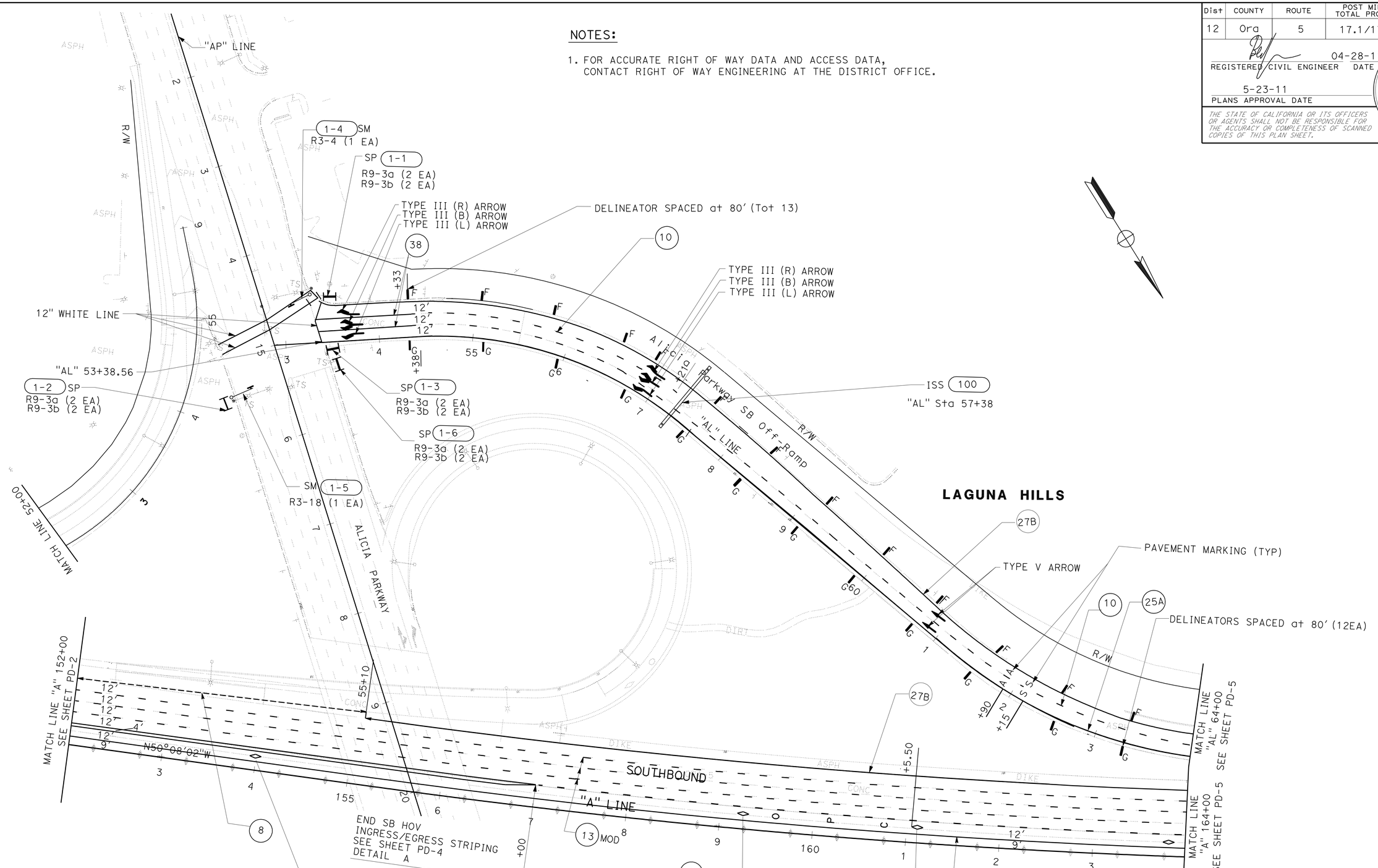

THIS PLAN ACCURATE FOR PAVEMENT DELINEATION WORK ONLY

PAVEMENT DELINEATION AND SIGN PLAN

SCALE: 1"=50'

PD-4

STATE OF CALIFORNIA - DEPARTMENT OF TRANSPORTATION
Caltrans DESIGN DIVISION

FUNCTIONAL SUPERVISOR: KAMRAN MAZHAR
CALCULATED-DESIGNED BY: BEN IONESCU
CHECKED BY: DUNG PHAN
REVISED BY
DATE REVISED

LAST REVISION 11-29-10 | DATE PLOTTED => 26-AUG-2011 | TIME PLOTTED => 10:46

Dist	COUNTY	ROUTE	POST MILES TOTAL PROJECT	SHEET No.	TOTAL SHEETS
12	Ora	5	17.1/17.8	33	81

REGISTERED CIVIL ENGINEER 04-28-11 DATE

5-23-11
PLANS APPROVAL DATE

REGISTERED PROFESSIONAL ENGINEER
BEN IONESCU
No. C65482
Exp. 09-30-11
CIVIL
STATE OF CALIFORNIA

THE STATE OF CALIFORNIA OR ITS OFFICERS OR AGENTS SHALL NOT BE RESPONSIBLE FOR THE ACCURACY OR COMPLETENESS OF SCANNED COPIES OF THIS PLAN SHEET.

NOTES:

1. FOR ACCURATE RIGHT OF WAY DATA AND ACCESS DATA, CONTACT RIGHT OF WAY ENGINEERING AT THE DISTRICT OFFICE.

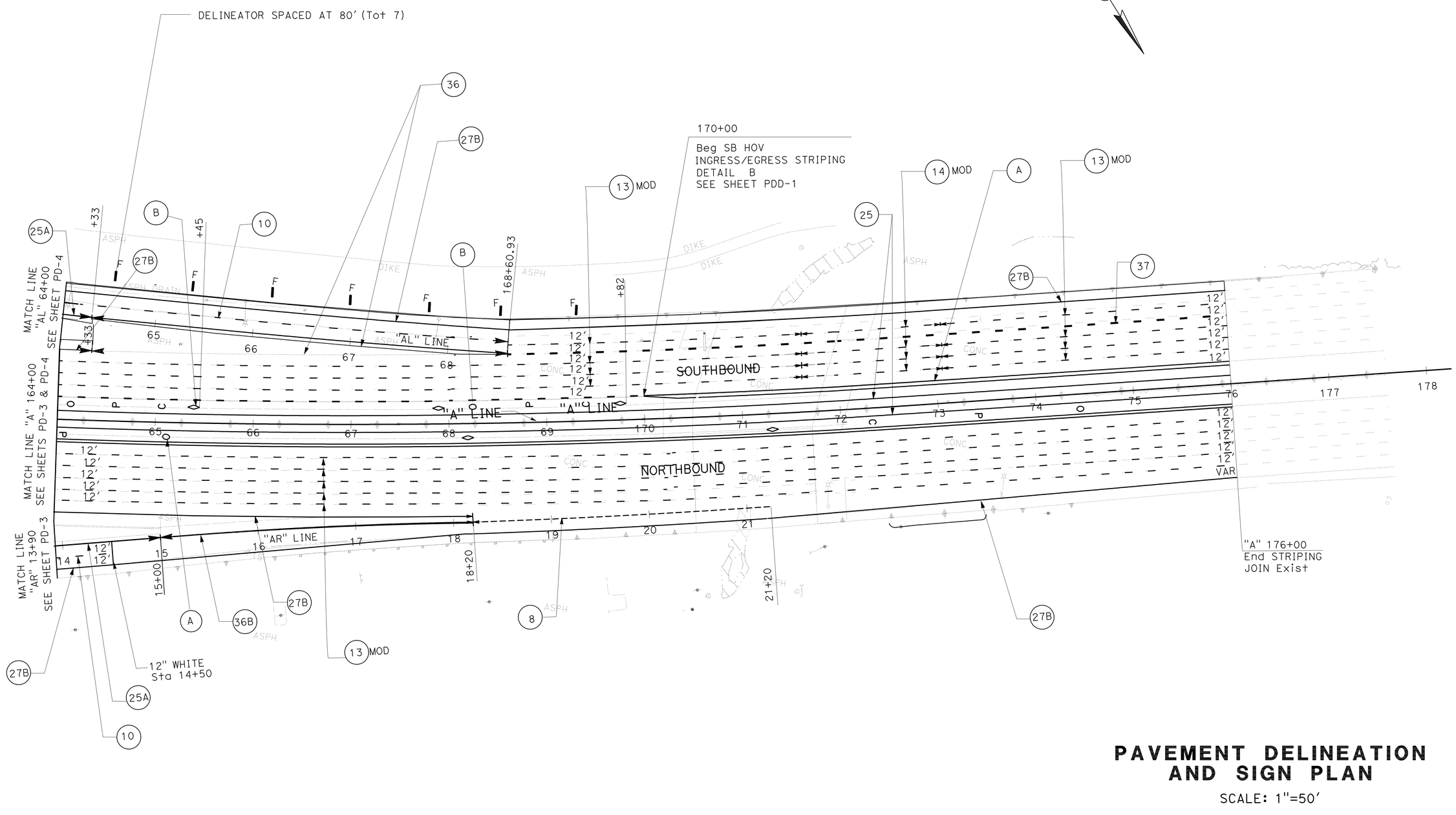

PAVEMENT DELINEATION AND SIGN PLAN

SCALE: 1"=50'

THIS PLAN ACCURATE FOR PAVEMENT DELINEATION ONLY

PD-5

STATE OF CALIFORNIA - DEPARTMENT OF TRANSPORTATION
Caltrans® DESIGN DIVISION

FUNCTIONAL SUPERVISOR: KAMRAN MAZHAR

CALCULATED-DESIGNED BY: BEN IONESCU
CHECKED BY: DUNG PHAN
REVISED BY
DATE REVISED

LAST REVISION 11-29-10 | DATE PLOTTED => 26-AUG-2011 | TIME PLOTTED => 10:46

Dist	COUNTY	ROUTE	POST MILES TOTAL PROJECT	SHEET No.	TOTAL SHEETS
12	Ora	5	17.1/17.8	34	81

REGISTERED CIVIL ENGINEER DATE 04-28-11

5-23-11
PLANS APPROVAL DATE

REGISTERED PROFESSIONAL ENGINEER
BEN IONESCU
No. 65482
Exp. 9-30-11
CIVIL
STATE OF CALIFORNIA

THE STATE OF CALIFORNIA OR ITS OFFICERS OR AGENTS SHALL NOT BE RESPONSIBLE FOR THE ACCURACY OR COMPLETENESS OF SCANNED COPIES OF THIS PLAN SHEET.

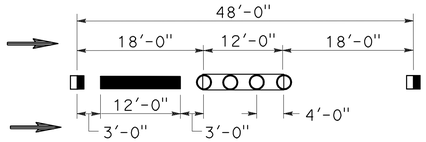

TYPICAL DETAIL 13 MOD

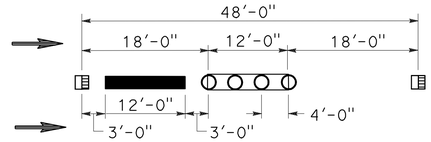

TYPICAL DETAIL 14 MOD

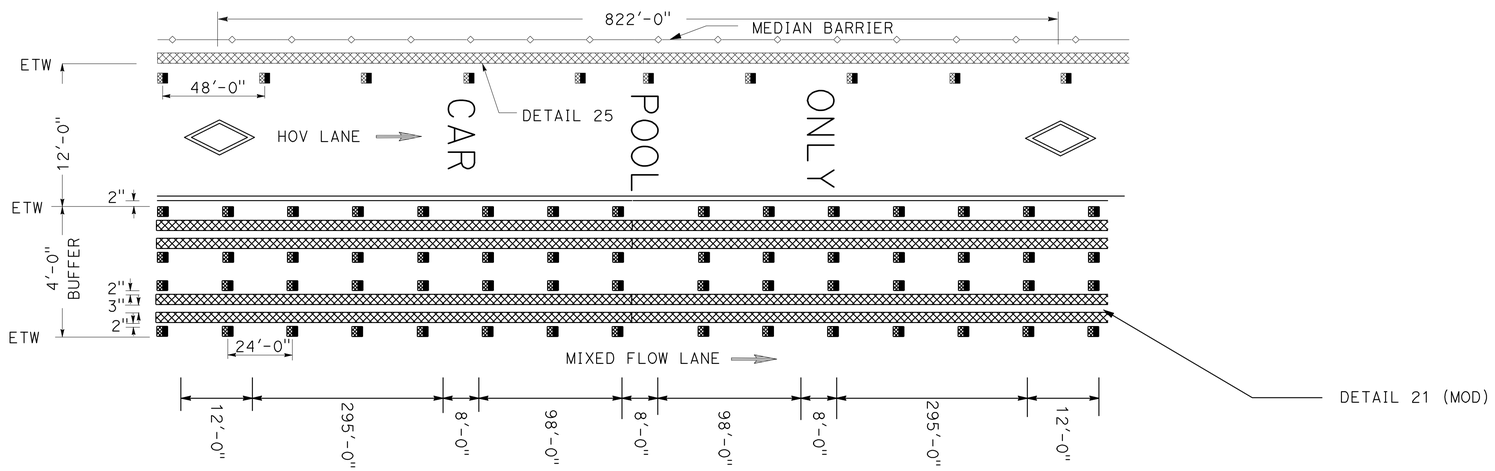

DETAIL A

TYPICAL HOV LANE PAVEMENT MARKING

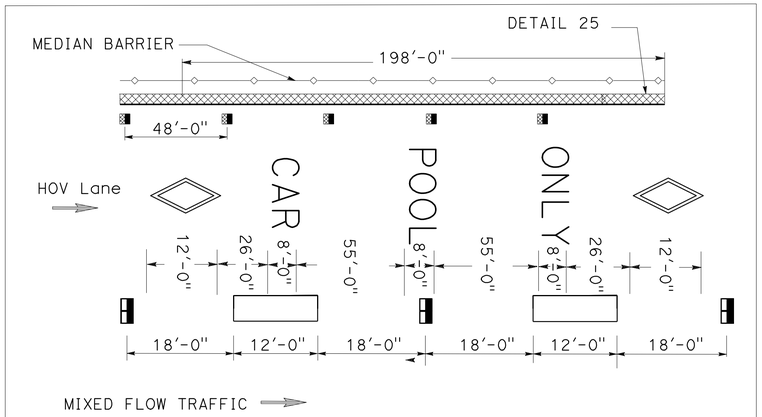

DETAIL B

TYPICAL HOV LANE PAVEMENT MARKING
AT INGRESS/EGRESS

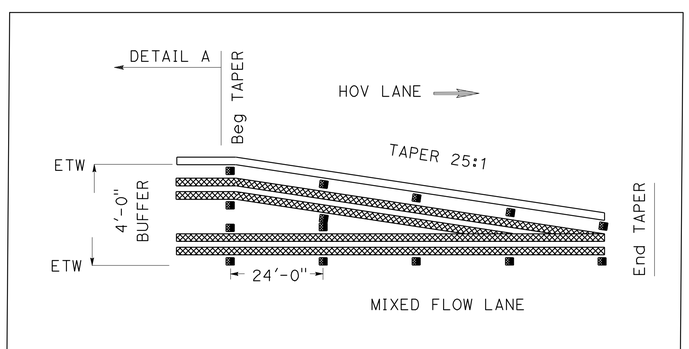

TYPICAL DETAIL

HOV LANE TAPERED STRIPING DETAIL
AT INGRESS/EGRESS LOCATION

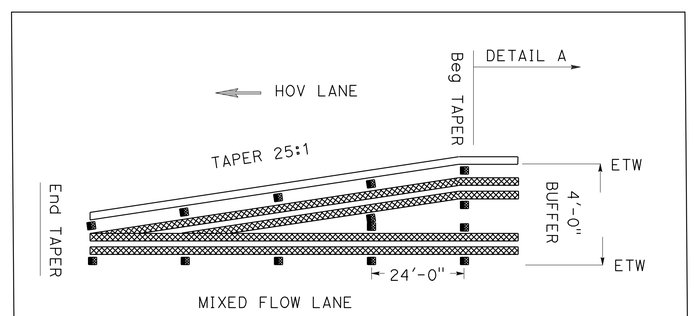

TYPICAL DETAIL (MIRROR)

HOV LANE TAPERED STRIPING DETAIL
AT INGRESS/EGRESS LOCATION

LEGEND:

- TYPE H ONE-WAY YELLOW RETROREFLECTIVE MARKER
- TYPE G ONE-WAY CLEAR RETROREFLECTIVE MARKER
- TYPE C RED-CLEAR RETROREFLECTIVE MARKER
- TYPE A WHITE NON-REFLECTIVE MARKER
- 4" BLACK PAINT TRAFFIC STRIPE (2-COAT)
- 4" YELLOW THERMOPLASTIC TRAFFIC STRIPE
- 4" WHITE THERMOPLASTIC TRAFFIC STRIPE
- 8" WHITE THERMOPLASTIC TRAFFIC STRIPE
- DIRECTION OF TRAFFIC

PAVEMENT DELINEATION DETAILS

NO SCALE **PDD-1**

REVISED BY	DATE REVISED
B. IONESCU	K. MAZHAR
CALCULATED-DESIGNED BY	CHECKED BY
FUNCTIONAL SUPERVISOR	KAMRAN MAZHAR

STATE OF CALIFORNIA - DEPARTMENT OF TRANSPORTATION
Caltrans® DESIGN DIVISION

LAST REVISION 04-05-11
DATE PLOTTED => 26-AUG-2011
TIME PLOTTED => 10:46

Dist	COUNTY	ROUTE	POST MILES TOTAL PROJECT	SHEET No.	TOTAL SHEETS
12	Ora	5	17.1/17.8	35	81

REGISTERED CIVIL ENGINEER 04-28-11 DATE

5-23-11
PLANS APPROVAL DATE

REGISTERED PROFESSIONAL ENGINEER BEN IONESCU No. C 65482 Exp. 9-30-11 CIVIL STATE OF CALIFORNIA

THE STATE OF CALIFORNIA OR ITS OFFICERS OR AGENTS SHALL NOT BE RESPONSIBLE FOR THE ACCURACY OR COMPLETENESS OF SCANNED COPIES OF THIS PLAN SHEET.

PAVEMENT DELINEATION QUANTITIES

SHEET No.	LOCATION	THERMOPLASTIC TRAFFIC STRIPE										PAINT TRAFFIC STRIPE 2-COAT	THERMOPLASTIC PAVEMENT MARKING			DELINEATOR (CLASS I)	PAVEMENT MARKER				REMOVE				
		DETAIL 25 4" SOLID YELLOW	DETAIL 25A 4" SOLID YELLOW	4" SOLID YELLOW DETAIL "A" (HOV BUFFER)	DETAIL 27B 4" SOLID WHITE	8" WHITE BROKEN DETAIL B (36-12) INGRESS/EGRESS	DETAIL 13 MOD, 14 MOD 4" WHITE BROKEN (36-12)	DETAIL 8 & 9 4" WHITE BROKEN (17-7)	DETAIL 37 8" WHITE BROKEN (12-3)	DETAIL 36, 36A & 36B 8" SOLID WHITE	DETAIL 38 & 38B 8" SOLID WHITE	DETAILS 13 MOD 14 MOD 4" BLACK BROKEN (36-12)	ARROWS	WORDS - SYMBOLS	12" SOLID WHITE (LIMIT LINE / DIAGONAL)		NON-REFLECTIVE	RETRO-REFLECTIVE			YELLOW THERMOPLASTIC TRAFFIC STRIPE (HAZARDOUS WASTE)	THERMOPLASTIC TRAFFIC STRIPE	THERMOPLASTIC PAVEMENT MARKING	PAINTED TRAFFIC STRIPE	PAVEMENT MARKER
																	TYPE A	TYPE C	TYPE G	TYPE H					
		LF	LF	LF	LF	LF	LF	LF	LF	LF	LF	LF	SQFT	SQFT	SQFT	EA	EA	EA	EA	EA	LF	LF	SQFT	EA	EA
PD-1	"A" LINE				950		1840					1840					153		42			460		940	195
PD-2	"A" LINE	2500		6800	2200	800	10195	105	143	566	300	10195		252			850	24	323	386	9300	5697	252	2548	1715
PD-3	"A" LINE	1200		2923	900	469	5255	300				5255		112			438		136	110	4123	2526	112	1313	862
	"AR" LINE		730		905					370			62		89	11*	113		15	31	1997	2347	213		309
PD-4	"A" LINE	1200		2000	890	700	3600	310				3600		106			430		110	204	4495	3214	106	900	876
	"AL" LINE		1062		1041						200		380	106	273	25			41	45	850	1891	519		21
PD-5	"A" LINE	2400		7200	1640	600	10339		739			10339		286		2	800	16	304	112	6000	4141	410	2585	1759
	"AR" LINE		110		730			300		320					24		120	8			110	820	24		
	"AL" LINE		33		461					854						5			30	6	20	1248			111
SUB-TOTAL		7300	1935	18923	9717	2569	31229	1015	882	2110	500	31229	442	862	386	41	2904	48	1001	894	26895	22344	1636	8286	5848
TOTAL FROM SCQ-1												20552					733		206					7379	939
GRAND TOTAL		37875				2569	31229	1015	882	2610		51781	1690			41	3637	2149			26895	22344	1636	15665	6787

FOR ADDITIONAL QUANTITIES SEE STAGE CONSTRUCTION QUNATITIES

* : INCLUDES 5 GUARD RAIL DELINEATORS

PAVEMENT DELINEATION QUANTITIES

PDQ-1

CALCULATED-DESIGNED BY BEN IONESCU
CHECKED BY DUNG PHAN
REVISED BY
DATE REVISED
FUNCTIONAL SUPERVISOR KAMRAN MAZHAR

STATE OF CALIFORNIA - DEPARTMENT OF TRANSPORTATION
Caltrans
DESIGN DIVISION

LAST REVISION 04-05-11
DATE PLOTTED => 26-AUG-2011
TIME PLOTTED => 10:46

Dist	COUNTY	ROUTE	POST MILES TOTAL PROJECT	SHEET No.	TOTAL SHEETS
12	Ora	5	17.1/17.8	36	81

REGISTERED CIVIL ENGINEER 04-28-11 DATE

5-23-11
PLANS APPROVAL DATE

REGISTERED PROFESSIONAL ENGINEER
BEN IONESCU
No. C65482
Exp. 09-30-11
CIVIL
STATE OF CALIFORNIA

THE STATE OF CALIFORNIA OR ITS OFFICERS OR AGENTS SHALL NOT BE RESPONSIBLE FOR THE ACCURACY OR COMPLETENESS OF SCANNED COPIES OF THIS PLAN SHEET.

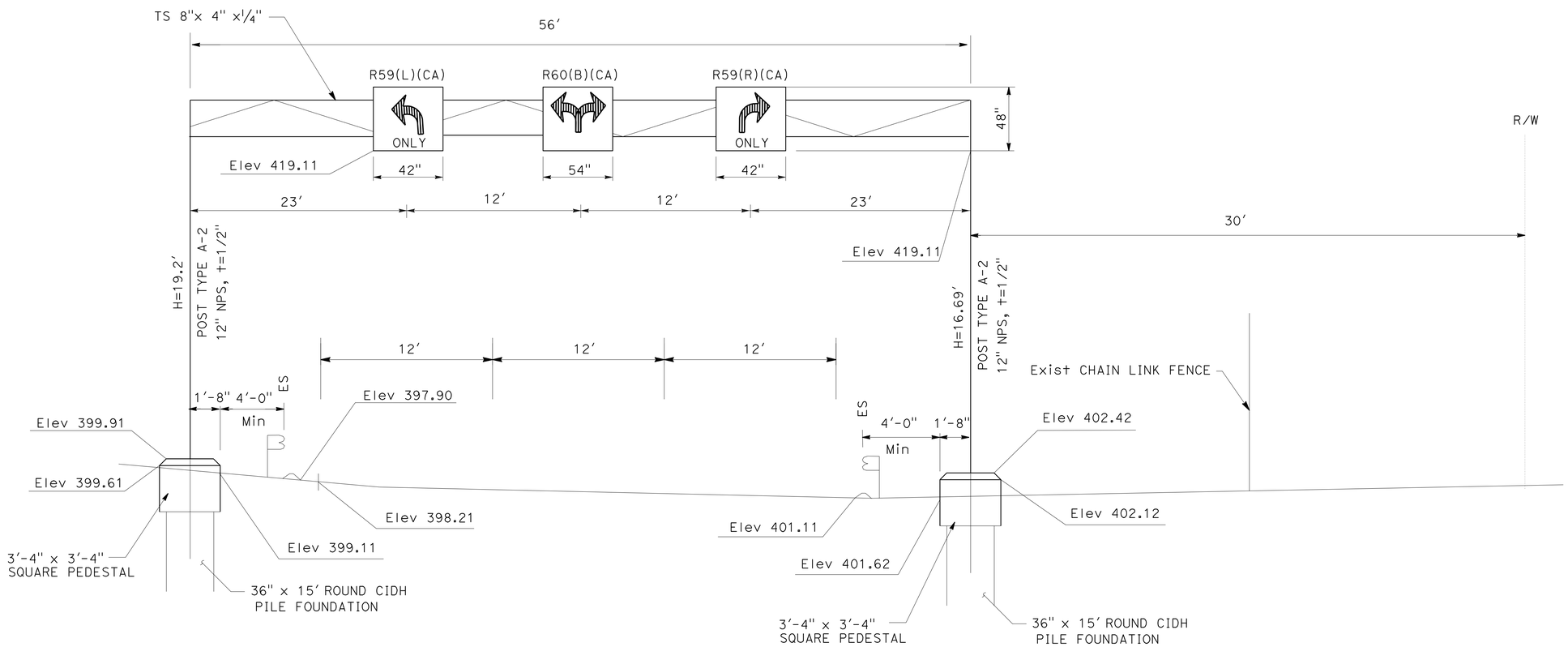

SIGN No. 100

ALICIA PARKWAY OFF RAMP Sta 57+38 "AL" LINE

SIGN DETAILS

NO SCALE

SD-1

STATE OF CALIFORNIA - DEPARTMENT OF TRANSPORTATION
Caltrans® DESIGN DIVISION

FUNCTIONAL SUPERVISOR: KAMRAN MAZHAR
CALCULATED-DESIGNED BY: BEN IONESCU
CHECKED BY: DUNG PHAN
REVISED BY
DATE REVISED

LAST REVISION 11-29-10
DATE PLOTTED => 26-AUG-2011
TIME PLOTTED => 10:46

Dist	COUNTY	ROUTE	POST MILES TOTAL PROJECT	SHEET No.	TOTAL SHEETS
12	Ora	5	17.1/17.8	37	81

REGISTERED CIVIL ENGINEER 04-28-11 DATE

5-23-11
PLANS APPROVAL DATE

REGISTERED PROFESSIONAL ENGINEER BEN IONESCU No. C 65482 Exp. 09/30/11 CIVIL STATE OF CALIFORNIA

THE STATE OF CALIFORNIA OR ITS OFFICERS OR AGENTS SHALL NOT BE RESPONSIBLE FOR THE ACCURACY OR COMPLETENESS OF SCANNED COPIES OF THIS PLAN SHEET.

MATERIAL SUMMARY-CONTRACTOR FURNISHED SIGNS

SHEET No.	SIGN No.	SIGN CODE	SIGN PANEL DIMENSION (L X H)	SINGLE FACED	SIGN FACING MATERIAL				OVERHEAD	ROADSIDE
					BACKGROUND		LEGEND		FURNISH LAMINATED PANEL SIGN	FURNISH SINGLE SHEET ALUMINUM SIGN
					SHEETING COLOR	RETROREFLECTIVE ASTM TYPE	SHEETING COLOR	RETROREFLECTIVE ASTM TYPE	1"	0.063"
									TYPE A	UNFRAMED
									SQFT	SQFT
PD-3	1-1	R9-3a	24" X 24"	×	WHITE	VII	BLACK/RED	VII		8
		R9-3b	18" X 12"	×	WHITE	VII	BLACK	VII		3
PD-4	1-1	R9-3a	24" X 24"	×	WHITE	VII	BLACK/RED	VII		8
		R9-3b	18" X 12"	×	WHITE	VII	BLACK	VII		3
	1-2	R9-3a	24" X 24"	×	WHITE	VII	BLACK/RED	VII		8
		R9-3b	18" X 12"	×	WHITE	VII	BLACK	VII		3
	1-3	R9-3a	24" X 24"	×	WHITE	VII	BLACK/RED	VII		8
		R9-3b	18" X 12"	×	WHITE	VII	BLACK	VII		3
	1-4	R3-4	30" X 30"	×	WHITE	II	BLACK/RED	II		6.25
	1-5	R3-18	30" X 30"	×	WHITE	II	BLACK/RED	II		6.25
	1-6	R9-3a	24" X 24"	×	WHITE	VII	BLACK/RED	VII		8
		R9-3b	18" X 12"	×	WHITE	VII	BLACK	VII		3
	100	R59 (L) (CA)	42" X 48"	×	BLACK	III	BLACK	III	14	
		R60 (B) (CA)	54" X 48"	×	BLACK	III	BLACK	III	18	
		R59 (R) (CA)	42" X 48"	×	BLACK	III	BLACK	III	14	
TOTAL									46	67.5

LEGEND:

Non = Non-Reflective
N/A = Not Applicable
Blk = BLACK
Blu = BLUE
Brn = Brown
G = GREEN
W = WHITE
R = RED
Y = YELLOW

ROADSIDE SIGNS

SHEET No.	SIGN No.	SIGN CODE	PANEL SIZE in	INSTALL SIGN (MAST-ARM MOUNTED) (N)	INSTALL SIGN (PEDESTRIAN BARRICADE) (N)	REMARKS
				EA	EA	
PD-3	1-1	R9-3a	24" X 24"		2	SEE ELECTRICAL PLANS
		R9-3b	18" X 12"		2	SEE ELECTRICAL PLANS
PD-4	1-1	R9-3a	24" X 24"		2	SEE ELECTRICAL PLANS
		R9-3b	18" X 12"		2	SEE ELECTRICAL PLANS
	1-2	R9-3a	24" X 24"		2	SEE ELECTRICAL PLANS
		R9-3b	18" X 12"		2	SEE ELECTRICAL PLANS
	1-3	R9-3a	24" X 24"		2	SEE ELECTRICAL PLANS
		R9-3b	18" X 12"		2	SEE ELECTRICAL PLANS
	1-4	R3-4	30" X 30"	1		SEE ELECTRICAL PLANS
	1-5	R3-18	30" X 30"	1		SEE ELECTRICAL PLANS
	1-6	R9-3a	24" X 24"		2	SEE ELECTRICAL PLANS
		R9-3b	18" X 12"		2	SEE ELECTRICAL PLANS
TOTAL				2	20	

(N) NOT A SEPARATE PAY ITEM. FOR INFORMATION ONLY.

OVERHEAD SIGNS

SHEET	LOCATION	SIGN No.	FURNISH SIGN STRUCTURE (LIGHTWEIGHT)	INSTALL SIGN STRUCTURE (LIGHTWEIGHT)	36" CIDH CONCRETE PILE (SIGN FOUNDATION)
			LB	LB	LF
PD-4	SB ROUTE 5 ALICIA PARKWAY OFF-RAMP "AL" 57+38.00	100	6700	6700	30
TOTAL			6700	6700	30

SIGN QUANTITIES

SQ-1

REVISED BY | DATE REVISED
BEN IONESCU | DUNG PHAN
CALCULATED-DESIGNED BY | CHECKED BY
FUNCTIONAL SUPERVISOR | KAMRAN MAZHAR

STATE OF CALIFORNIA - DEPARTMENT OF TRANSPORTATION
Caltrans DESIGN DIVISION

LAST REVISION 11-29-10 | DATE PLOTTED => 26-AUG-2011 | TIME PLOTTED => 10:46

Dist	COUNTY	ROUTE	POST MILES TOTAL PROJECT	SHEET No.	TOTAL SHEETS
12	Ora	5	17.1/17.8	38	81

REGISTERED CIVIL ENGINEER 04-28-11 DATE

5-23-11
PLANS APPROVAL DATE

REGISTERED PROFESSIONAL ENGINEER BEN IONESCU No. 65482 Exp. 9-30-11 CIVIL STATE OF CALIFORNIA

THE STATE OF CALIFORNIA OR ITS OFFICERS OR AGENTS SHALL NOT BE RESPONSIBLE FOR THE ACCURACY OR COMPLETENESS OF SCANNED COPIES OF THIS PLAN SHEET.

METAL BEAM GUARD RAILING (WOOD POST)

SHEET No.	LOCATION	SIDE	STATION LIMITS	MBGR (WOOD POST)	ALTERNATIVE FLARED TERMINAL SYSTEM	Trans RAILING (TYPE WB)	END ANCHOR ASSEMBLY (TYPE SFT)	ALTERNATIVE IN-LINE TERMINAL SYSTEM	BURIED POST ANCHOR (N)
				LF	EA	EA	EA	EA	EA
L-1	NB ROUTE 5 (MAINLINE)	R†	"A" 140+38.75 TO "A" 141+07.50	31.25	1		1		
L-2	ALICIA PARKWAY SB OFF-RAMP	R†	"AL" 57+31.67 TO "AL" 58+06.67	37.50	1		1		
L-2	ALICIA PARKWAY SB OFF-RAMP	L†	"AL" 57+31.67 TO "AL" 58+06.67	37.50	1		1		
L-3	ALICIA PARKWAY NB ON-RAMP	L†	"AR" 7+91.17 TO "AR" 9+66.17	137.50	1		1		
L-3	ALICIA PARKWAY NB ON RAMP	R†	"AR" 10+40.20 TO "AR" 11+40.20	75.00		1			1
L-3	ALICIA PARKWAY NB ON RAMP	L†	"AR" 12+40.30 TO "AR" 13+77.80	100			1	1	
L-4	ALICIA PARKWAY NB ON-RAMP	R†	"AR" 16+19.11 TO "AR" 19+00.36	231.25		2			
			TOTAL	650.50	5	3	5	1	1

(N): NOT A SEPARATE PAY ITEM, FOR INFORMATION ONLY.

REMOVE METAL BEAM GUARD RAILING

SHEET No.	LOCATION	REMOVE MBGR
		LF
L-1	"A" 140+38.75 TO "A" 141+07.50	69
L-3	"AR" 7+91.17 TO "AR" 9+66.17	175
L-3	"AR" 10+40.20 TO "AR" 11+40.20	100
L-4	"AR" 16+19.11 TO "AR" 19+00.36	281
	TOTAL	625

GROOVE EXISTING CONCRETE PAVEMENT

SHEET No.	LOCATION	STATION LIMITS	GROOVE EXISTING CONCRETE PAVEMENT
			SQYD
L-1	NB ROUTE 5 (MAINLINE)	"A" 139+50 TO "A" 152+00	10,560
L-1	SB ROUTE 5 (MAINLINE)	"A" 139+50 TO "A" 152+00	11,670
L-2	SB ROUTE 5 (MAINLINE)	"A" 152+00 TO "A" 164+00	9,450
L-3	NB ROUTE 5 (MAINLINE)	"A" 152+00 TO "A" 164+00	11,630
L-4	NB ROUTE 5 (MAINLINE)	"A" 164+00 TO "A" 176+00	13,130
L-4	SB ROUTE 5 (MAINLINE)	"A" 164+00 TO "A" 176+00	11,260
		TOTAL	67,700

ADJUST FRAME AND GRATE TO GRADE

SHEET No.	ALIGNMENT	R†/L†	STATION	ADJUST FRAME AND GRATE TO GRADE
				EA
L-2	"AL" LINE	R†	58+22.82	1
	"AL" LINE	R†	58+73.00	1
	"AL" LINE	R†	58+99.18	1
L-4	"AL" LINE	L†	65+49.36	1
	"AL" LINE	L†	66+50.64	1
	"AL" LINE	L†	67+53.36	1
	"AR" LINE	R†	14+97.80	1
	"AR" LINE	R†	16+49.90	1
	"AR" LINE	R†	18+00.84	1
	"AR" LINE	R†	19+73.26	1
TOTAL				10

REMOVE ASPHALT CONCRETE DIKE

SHEET No.	LOCATION	SIDE	STATION LIMITS	REMOVE ASPHALT CONCRETE DIKE
				LF
L-1	NB ROUTE 5 (MAINLINE)	R†	"A" 140+13.75 TO "A" 141+07.50	93.75
L-3	ALICIA PARKWAY WB ON-RAMP	R†	"AR" 10+40.20 TO "AR" 11+40.20	100
L-4	ALICIA PARKWAY WB ON-RAMP	R†	"AR" 16+19.11 TO "AR" 19+00.36	281.25
			TOTAL	475

SUMMARY OF QUANTITIES

Q-1

STATE OF CALIFORNIA - DEPARTMENT OF TRANSPORTATION
Caltrans DESIGN DIVISION

FUNCTIONAL SUPERVISOR: KAMRAN MAZHAR
CALCULATED-DESIGNED BY: BEN IONESCU
CHECKED BY: DUNG PHAN
REVISED BY / DATE REVISED

LAST REVISION 11-29-10 | DATE PLOTTED => 26-AUG-2011 | TIME PLOTTED => 10:46

Dist	COUNTY	ROUTE	POST MILES TOTAL PROJECT	SHEET No.	TOTAL SHEETS
12	Ora	5	17.1/17.8	39	81

REGISTERED CIVIL ENGINEER 04-28-11 DATE

5-23-11
PLANS APPROVAL DATE

REGISTERED PROFESSIONAL ENGINEER BEN IONESCU No. 65482 Exp. 9-30-11 CIVIL STATE OF CALIFORNIA

THE STATE OF CALIFORNIA OR ITS OFFICERS OR AGENTS SHALL NOT BE RESPONSIBLE FOR THE ACCURACY OR COMPLETENESS OF SCANNED COPIES OF THIS PLAN SHEET.

ROADWAY QUANTITIES

SHEET No.	LOCATION	STATION LIMITS	Pvmt Str Sec Type	ROADWAY EXCAVATION	HMA (OPEN GRADED) DEPTH 0.1'	Conc PAVEMENT (RAPID STRENGTH Conc)	TACK COAT	REMOVE CONCRETE PAVEMENT	CLASS 2 AGGREGATE SUBBASE	LEAN Conc BASE RAPID SETTING	SEAL ISOLATION JOINT	SEAL PAVEMENT JOINT	DOWEL BARS (N)	TIE BARS (N)	GRIND EXIST CONCRETE PAVEMENT
				CY	TON	CY	TON	SQYD	CY	CY	LF	LF	EA	EA	SQYD
L-1	NB ROUTE 5 (MAINLINE)	"A" 141+72.37 TO "A" 146+75.54	4	1092		546			382	191	504	960	960		733
L-2	ALICIA PARKWAY SB OFF-RAMP	"AL" 53+39.43 TO "AL" 55+48.50	3	589		269		1009	236	118	600	532	532	240	
L-2	ALICIA PARKWAY SB OFF-RAMP	"AL" 55+48.50 TO "AL" 64+00.00	1		237		0.46								
L-3	ALICIA PARKWAY NB ON-RAMP	"AP" 26+61.74 TO "AR" 13+90.80	1		208		0.41								
L-4	ALICIA PARKWAY SB OFF-RAMP	"AL" 64+00.00 TO "AL" 68+60.93	1		121		0.24								
L-4	ALICIA PARKWAY NB ON-RAMP	"AR" 13+90.80 TO "AR" 20+46.51	1		173		0.34								
			TOTAL	1681	739	815	1.45	1009	618	309	1104	1492	1492	240	733

(N) NOT A PAY ITEM, FOR INFORMATION ONLY

PLACE HOT MIX ASPHALT DIKE

SHEET No.	LOCATION	SIDE	STATION LIMITS	PLACE HMA DIKE (TYPE C)	PLACE HMA DIKE (TYPE E)	PLACE HMA DIKE (TYPE F)	HOT MIX ASPHALT
				LF	LF	LF	TON
L-1	NB ROUTE 5 (MAINLINE)	Rt	"A" 140+13.75 TO "A" 141+07.50	62.50		31.25	0.87
L-2	ALICIA PARKWAY SB OFF-RAMP	Rt	"AL" 53+47.19 TO "AL" 55+48.50		201.31		2.62
L-2	ALICIA PARKWAY SB OFF-RAMP	Rt	"AL" 57+31.67 TO "AL" 58+31.67	62.50		37.50	0.95
L-2	ALICIA PARKWAY SB OFF-RAMP	Lt	"AL" 57+31.67 TO "AL" 58+31.67	62.50		37.50	0.95
L-3	ALICIA PARKWAY NB ON-RAMP	Rt	"AR" 10+40.20 TO "AR" 11+40.20			100	1.29
L-4	ALICIA PARKWAY NB ON-RAMP	Rt	"AR" 16+19.11 TO "AR" 19+00.36			281.25	2.34
			TOTAL	187.50	201.31	487.50	9.00

MINOR CONCRETE (Misc Const)

SHEET No.	STATION LIMITS	MINOR Conc (Misc Const) CURB (TYPE A2-8)	MINOR Conc (Misc Const) CURB RAMP
		CY	CY
L-2	"AL" 53+35.94		3
L-2	"AL1" 4+97.39		3
L-2	"AL1" 4+95.60		3
L-2	"AP" 14+86.74		3
L-2	"AL" 54+57.67 TO "AL" 55+48.50	6	
	SUBTOTAL	6	12
	TOTAL	18	

REMOVE CONCRETE

SHEET No.	STATION LIMITS	REMOVE Conc CURB RAMP
		CY
L-2	"AL" 53+35.94	3
L-2	"AL1" 4+97.39	3
L-2	"AL1" 4+95.60	3
L-2	"AP" 14+86.74	3
	TOTAL	12

SUMMARY OF QUANTITIES

Q-2

STATE OF CALIFORNIA - DEPARTMENT OF TRANSPORTATION
Caltrans DESIGN DIVISION

FUNCTIONAL SUPERVISOR: KAMRAN MAZHAR
CALCULATED-DESIGNED BY: B. IONESCU
CHECKED BY: K. MAZHAR
REVISED BY
DATE REVISED

LAST REVISION 11-30-10
DATE PLOTTED => 26-AUG-2011
TIME PLOTTED => 10:47

Dist	COUNTY	ROUTE	POST MILES TOTAL PROJECT	SHEET No.	TOTAL SHEETS
12	Ora	5	17.1/17.8	40	81

Mina Zolfaghari 04-28-11
REGISTERED ELECTRICAL ENGINEER DATE

5-23-11
PLANS APPROVAL DATE

REGISTERED PROFESSIONAL ENGINEER MINA ZOLFAGHARI No. E 16816 Exp. 12/31/12 ELECTRICAL STATE OF CALIFORNIA

THE STATE OF CALIFORNIA OR ITS OFFICERS OR AGENTS SHALL NOT BE RESPONSIBLE FOR THE ACCURACY OR COMPLETENESS OF SCANNED COPIES OF THIS PLAN SHEET.

NOTE:

FOR ACCURATE RIGHT OF WAY DATA,
CONTACT RIGHT OF WAY ENGINEERING AT THE DISTRICT OFFICE.

NOTES:(THIS SHEET ONLY)

1. RC ALL EXISTING PULL BOXES, SIGNAL STANDARDS, SIGNAL MOUNTINGS AND SIGNAL HEADS, LUMINAIRES, PPB AND SIGNS ATTACHED ON STANDARD POLES, UNLESS OTHERWISE NOTED.
   AB EXISTING LOOP DETECTORS AND CONDUITS, UNLESS OTHERWISE NOTED.

2 REMAIN IN PLACE

3 EXISTING 1½"C, 12 PAIR #19 sic TO NB OFF RAMP CONTROLLER (900 FEET) TO REMAIN.

4 EXISTING 1½"C, 12 PAIR #19 sic TO HON AVENUE SIGNAL CONTROLLER (700 FEET) TO REMAIN.

5 EXISTING 2"C TO REMAIN IN PLACE. RC ALL CONDUCTORS EXCEPT 12 PAIR #19 sic.

6 RC EXISTING TYPE III-BF SERVICE EQUIPMENT ENCLOSURE AND 480/240 V TO 240/120 V STEPDOWN TRANSFORMER. FOUNDATION REMAIN IN PLACE TO USE FOR NEW SERVICE EQUIPMENT ENCLOSURE. SEE SHEET E-2.

7 RL EXISTING MODEL 2070 CONTROLLER IN MODEL 332 CABINET WITH BBS AND ALL EQUIPMENT TO NEW LOCATION. SEE SHEET E-2.

EXISTING POLE AND EQUIPMENT SCHEDULE

No.	STANDARD			VEH SIG MTG		PED SIG	PPB		HPS LUM
	Type	SMA	LMA	Mast Arm	Pole	MTG	Ø	ARROW	
A	16	15′	–	MAS	SV-2-T	SP-2-T	–	–	–
B	17-A	15′	15′	MAS	SV-2-T	SP-1-T	4	←	310 W
C	1-A	–	–	–	TV-1-T	–	–	–	–
D	1-A	–	–	–	TV-1-T	–	–	–	–
E	17-A	15′	15′	MAS	SV-2-T	–	–	–	310 W
F	1-A	–	–	–	–	TP-1	4	→	–
G	PPB	–	–	–	–	–	4	←→	–

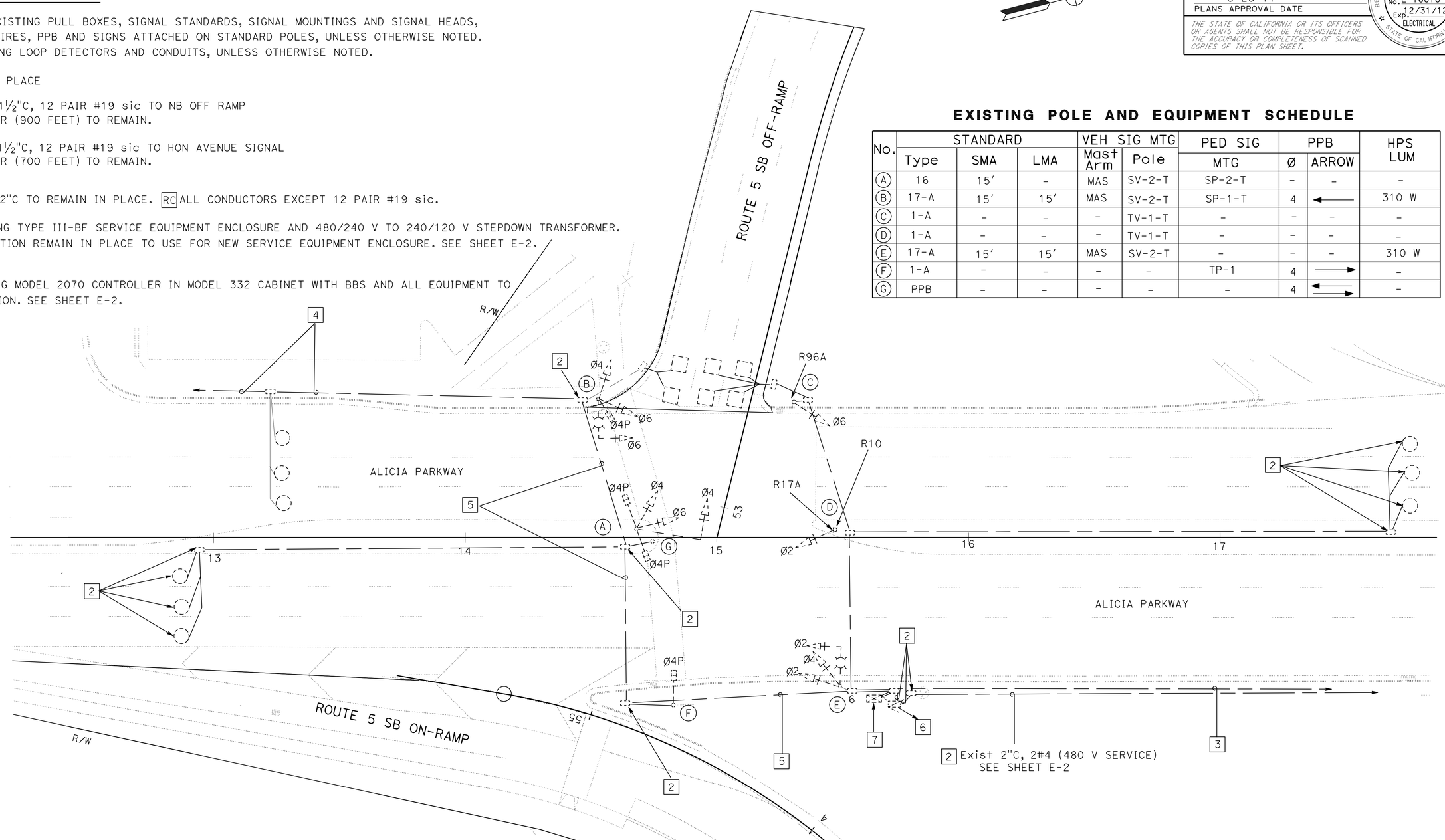

SIGNAL AND LIGHTING
(REMOVE)

SCALE: 1" = 20′

THIS PLAN IS ACCURATE FOR ELECTRICAL WORK ONLY.

E-1

STATE OF CALIFORNIA - DEPARTMENT OF TRANSPORTATION
Caltrans ELECTRICAL DESIGN

FUNCTIONAL SUPERVISOR: SHAHRAM SHAHRIARI
CALCULATED-DESIGNED BY: MINA ZOLFAGHARI
CHECKED BY: VANESSA TRUONG
REVISED BY / DATE REVISED

LAST REVISION 07-19-10
DATE PLOTTED => 26-AUG-2011
TIME PLOTTED => 10:47

Dist	COUNTY	ROUTE	POST MILES TOTAL PROJECT	SHEET No.	TOTAL SHEETS
12	Ora	5	17.1/17.8	41	81

Mina Zolfaghari 04-28-11
REGISTERED ELECTRICAL ENGINEER DATE

5-23-11
PLANS APPROVAL DATE

REGISTERED PROFESSIONAL ENGINEER MINA ZOLFAGHARI No. E 16816 Exp. 12/31/12 ELECTRICAL STATE OF CALIFORNIA

THE STATE OF CALIFORNIA OR ITS OFFICERS OR AGENTS SHALL NOT BE RESPONSIBLE FOR THE ACCURACY OR COMPLETENESS OF SCANNED COPIES OF THIS PLAN SHEET.

CONDUCTOR AND CONDUIT SCHEDULE

CONDUCTOR	CONDUCTOR RUN	1	2	3	4	5	6	7	8
12CSC	VEHICLE SIGNALS		2	2	4	2	2	8	8
3CSC	PPB		1	1	2			2	2
#10	LUMINAIRE AND SIGN ILLUMINATION		2	2	2	2	2	2	
	IISNS				2			2	
#6	SIGNAL SERVICE								2
DLC	Ø2			3	6			6	6
	Ø4		1	1	1	2	2	3	3
	Ø6					3	6	6	6
12 PAIR #19 SIC (E)		1 (E)						1 (E)	2 (E)
CONDUIT SIZE		2" (E)	3"	3"	4"	3"	3"		2-4"

ALL CONDUIT AND CONDUCTORS ARE NEW UNLESS OTHERWISE NOTED
(E) = EXISTING

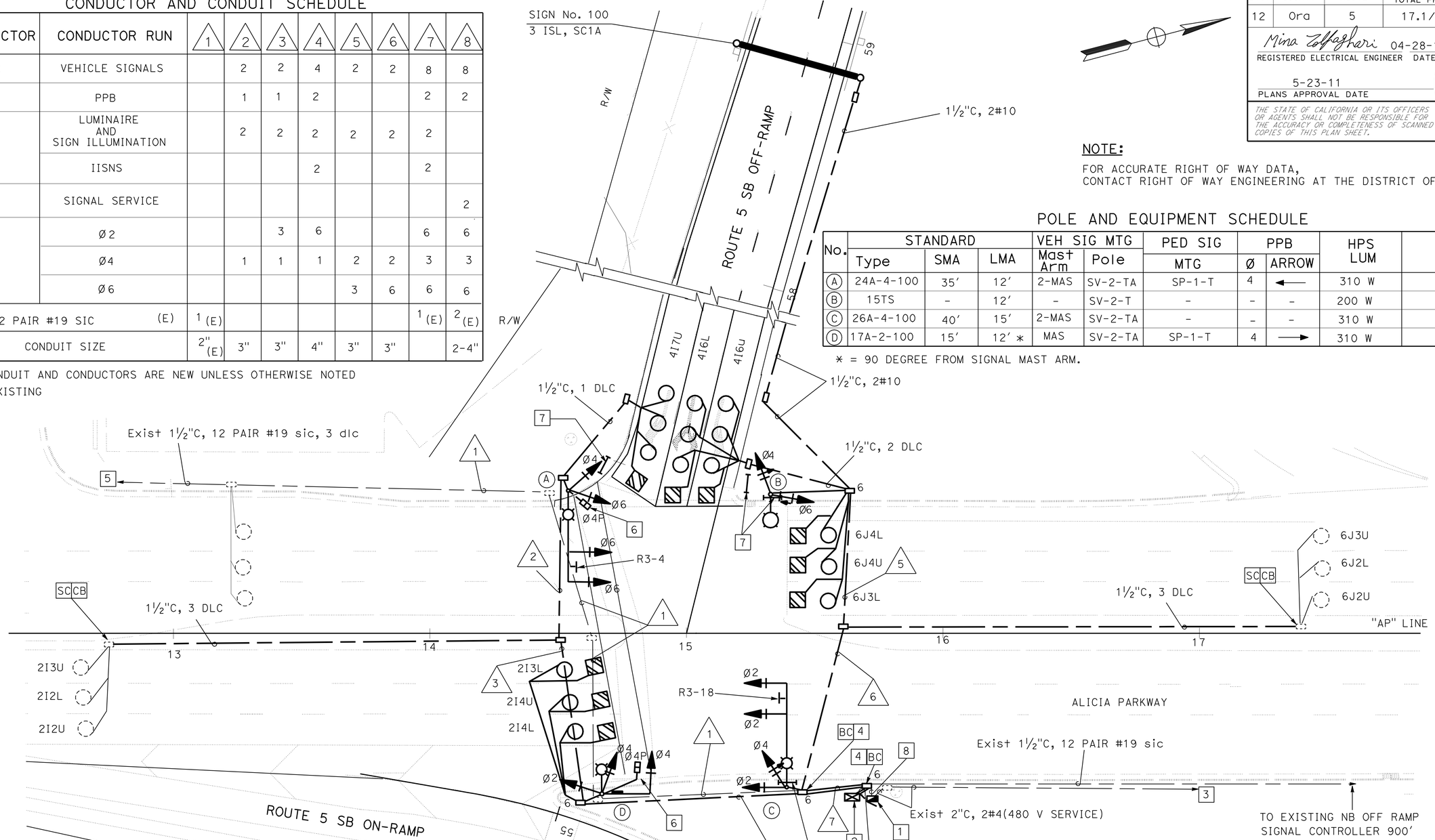

NOTE:

FOR ACCURATE RIGHT OF WAY DATA,
CONTACT RIGHT OF WAY ENGINEERING AT THE DISTRICT OFFICE.

POLE AND EQUIPMENT SCHEDULE

No.	STANDARD Type	STANDARD SMA	STANDARD LMA	VEH SIG MTG Mast Arm	VEH SIG MTG Pole	PED SIG MTG	PPB Ø	PPB ARROW	HPS LUM	IISNS
A	24A-4-100	35'	12'	2-MAS	SV-2-TA	SP-1-T	4	←	310 W	-
B	15TS	-	12'	-	SV-2-T	-	-	-	200 W	-
C	26A-4-100	40'	15'	2-MAS	SV-2-TA	-	-	-	310 W	-
D	17A-2-100	15'	12' *	MAS	SV-2-TA	SP-1-T	4	→	310 W	ALICIA

* = 90 DEGREE FROM SIGNAL MAST ARM.

NOTES: (THIS SHEET ONLY)

1. INSTALL NEW TYPE III-BF SERVICE EQUIPMENT ENCLOSURE ON EXISTING FOUNDATION, INSTALL NEW 5 KVA 480/240 V TO 240/120 V STEPDOWN TRANSFORMER IN NEW TYPE III-BF SERVICE EQUIPMENT ENCLOSURE. PROVIDE ITEMS (1) THRU (8), (10), (15) THRU (17), (22) THRU (25). SEE STANDARD PLAN SHEET ES-2E.
2. INSTALL RELOCATED EXISTING MODEL 2070 CONTROLLER IN MODEL 332 CABINET ON NEW FOUNDATION WITH ALL EXISTING EQUIPMENT AND EXISTING BATTERY BACKUP SYSTEM.
3. TO EXISTING METERED SERVICE IN TYPE R SERVICE EQUIPMENT ENCLOSURE LOCATED NEAR NB ON-RAMP, METER No. 115-4667. SEE SHEET E-5.
4. PULL BACK EXISTING 12 PAIR #19 SIC AND INSTALL IN NEW CONDUITS TO THE EXISTING MODEL 2070 CONTROLLER
5. TO HON Ave-PASEO DE ALICIA SIGNAL CONTROLLER (350 FEET)
6. INSTALL LED COUNTDOWN PEDESTRIAN SIGNAL MODULE.
7. INSTALL TYPE I PEDESTRIAN BARRICADE WITH TWO SIGNS OF R9-3A AND R9-3B BACK TO BACK.
8. EXISTING 2"C, RC CONDUCTORS. INSTALL 2#6 (SIGNAL), 2#10 (IISNS), 2#10 (LIGHTING AND SIGN ILLUMINATION).

THIS PLAN IS ACCURATE FOR ELECTRICAL WORK ONLY.

PHASE DIAGRAM

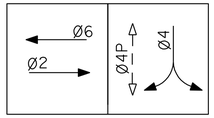

SIGNAL AND LIGHTING

SCALE: 1" = 20'

E-2

STATE OF CALIFORNIA - DEPARTMENT OF TRANSPORTATION
Caltrans ELECTRICAL DESIGN
FUNCTIONAL SUPERVISOR: SHAHRAM SHAHRIARI
CALCULATED-DESIGNED BY: MINA ZOLFAGHARI
CHECKED BY: VANESSA TRUONG
REVISED BY
DATE REVISED

LAST REVISION 07-19-10
DATE PLOTTED => 26-AUG-2011
TIME PLOTTED => 10:47

Dist	COUNTY	ROUTE	POST MILES TOTAL PROJECT	SHEET No.	TOTAL SHEETS
12	Ora	5	17.1/17.8	42	81

Mina Zolfaghari 04-28-11
REGISTERED ELECTRICAL ENGINEER DATE

5-23-11
PLANS APPROVAL DATE

REGISTERED PROFESSIONAL ENGINEER MINA ZOLFAGHARI No. E 16816 Exp. 12/31/12 ELECTRICAL STATE OF CALIFORNIA

THE STATE OF CALIFORNIA OR ITS OFFICERS OR AGENTS SHALL NOT BE RESPONSIBLE FOR THE ACCURACY OR COMPLETENESS OF SCANNED COPIES OF THIS PLAN SHEET.

NOTE:

FOR ACCURATE RIGHT OF WAY DATA,
CONTACT RIGHT OF WAY ENGINEERING AT THE DISTRICT OFFICE.

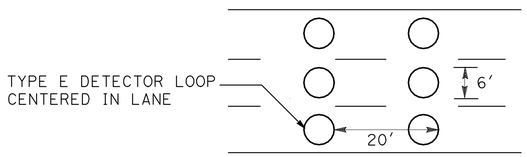

TYPICAL MAINLINE DETECTOR LOOPS SPACING DETAIL
NO SCALE

EXISTING CONDUCTOR AND CONDUIT SCHEDULE

CONDUCTOR	CONDUCTOR RUN	1	2	3	4	5	6	7
#14	RAMP SIGNAL					3	3	
	METER ON						2	2
	SPARES					3	3	2
#10	SIGNAL COMMON					1	1	1
#8	SERVICE						2	2
4#18	TELEPHONE	2	2		2	2	2	1
#14	LOOP WIRES	12(N)						
DLC	SURVEILLANCE	3 (R)	6 6 (N)		6 6 (N)	6 6 (N)	6 6 (N)	
	DEMAND				1	2	2	
	PASSAGE				1	2	2	
	QUEUE						2	2
	COUNT			1		1	1	
CONDUIT SIZE		2"	2½"	1½"	3"	3"	2-3"	2"

(N) = NEW
(R) = REMOVE EXISTING CONDUCTORS

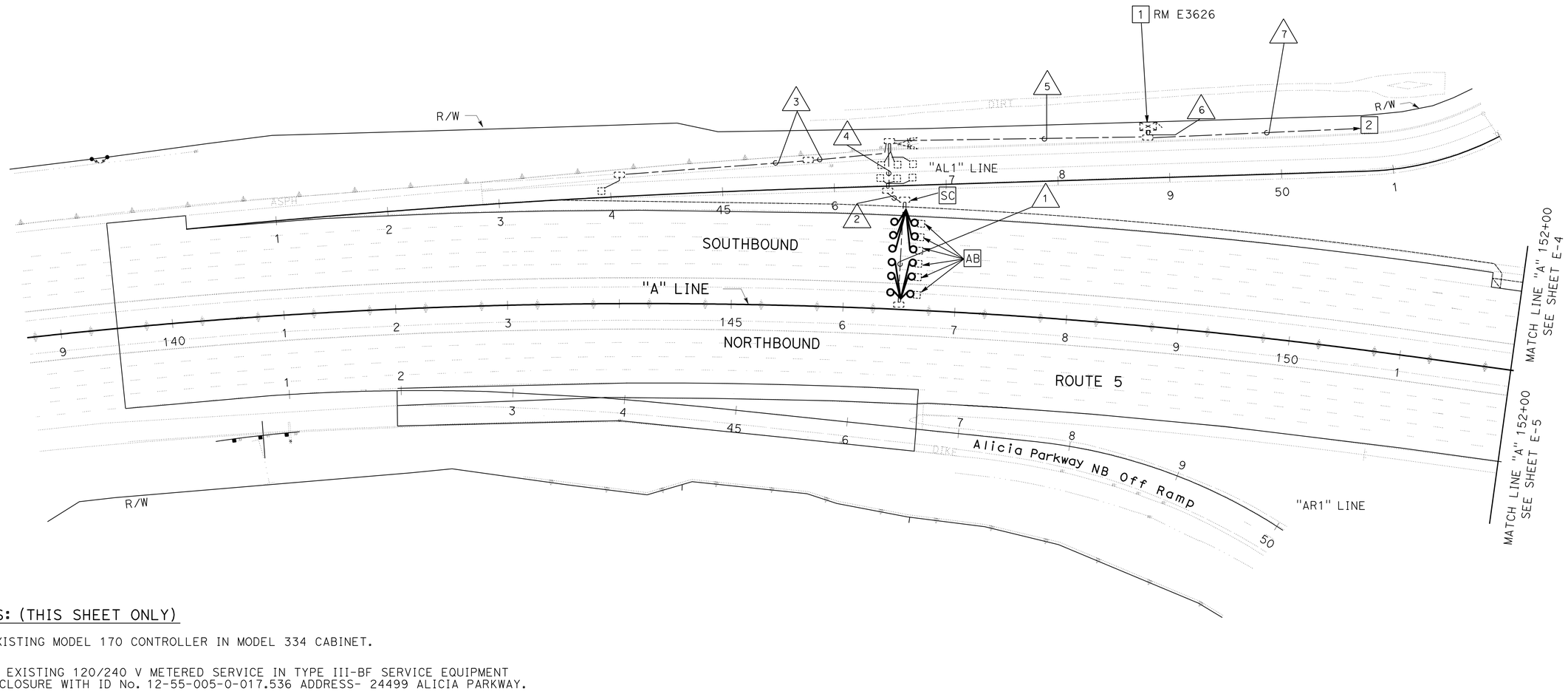

NOTES: (THIS SHEET ONLY)

1. EXISTING MODEL 170 CONTROLLER IN MODEL 334 CABINET.
2. TO EXISTING 120/240 V METERED SERVICE IN TYPE III-BF SERVICE EQUIPMENT ENCLOSURE WITH ID No. 12-55-005-0-017.536 ADDRESS- 24499 ALICIA PARKWAY.
3. REUSE EXISTING CONDUIT STUB-OUT.

INDUCTIVE LOOP DETECTOR

SCALE: 1" = 50'

THIS PLAN IS ACCURATE FOR ELECTRICAL WORK ONLY.

E-3

STATE OF CALIFORNIA - DEPARTMENT OF TRANSPORTATION
Caltrans ELECTRICAL DESIGN
FUNCTIONAL SUPERVISOR: SHAHRAM SHAHRIARI
CALCULATED-DESIGNED BY: MINA ZOLFAGHARI
CHECKED BY: VANESSA TRUONG
REVISED BY / DATE REVISED

LAST REVISION 07-19-10
DATE PLOTTED => 26-AUG-2011
TIME PLOTTED => 10:47

Dist	COUNTY	ROUTE	POST MILES TOTAL PROJECT	SHEET No.	TOTAL SHEETS
12	Ora	5	17.1/17.8	43	81

Mina Zolfaghari 04-28-11
REGISTERED ELECTRICAL ENGINEER DATE

5-23-11
PLANS APPROVAL DATE

REGISTERED PROFESSIONAL ENGINEER MINA ZOLFAGHARI No. E 16816 Exp. 12/31/12 ELECTRICAL STATE OF CALIFORNIA

THE STATE OF CALIFORNIA OR ITS OFFICERS OR AGENTS SHALL NOT BE RESPONSIBLE FOR THE ACCURACY OR COMPLETENESS OF SCANNED COPIES OF THIS PLAN SHEET.

NOTE:

FOR ACCURATE RIGHT OF WAY DATA,
CONTACT RIGHT OF WAY ENGINEERING AT THE DISTRICT OFFICE.

EXISTING CONDUCTOR AND CONDUIT SCHEDULE

CONDUCTOR	CONDUCTOR RUN	1	2	3	4	5	6	7	8	9	10
#14	RAMP SIGNAL				3	3 (N)					
	METER ON					2 (N)	2	2			
	SPARES				3	3 (N)	2	2			
#10	SIGNAL COMMON				1	1 (N)	1	1			
#8	SERVICE					2 (N)	2	2			
4#18	TELEPHONE					1 (N)	1 (R) 1 (N)	1 (R) 1 (N)			
#14	LOOP WIRES	12 (N)									
DLC	SURVEILLANCE	3 (R)	5 (R) 10 (N)	5 (R) 10 (N)	5 (R) 10 (N)	10 (N)					
	DEMAND			1 (R) 1 (N)	2 (R) 2 (N)	2 (N)					
	PASSAGE			1 (R) 1 (N)	2 (R) 2 (N)	2 (N)					
	QUEUE					2 (N)	2 (R) 2 (N)	2 (R) 2 (N)			
	COUNT				1 (R) 1 (N)	3 (N)	2 (R) 2 (N)		2 (R) 2 (N)	2 (R) 2 (N)	1 (N)
CONDUIT SIZE		2"	2½"	1½"	3"	2-3" (N)	3"	2"	2"	1½"	2" (N)

(N) = NEW
(R) = REMOVE EXISTING CONDUCTORS

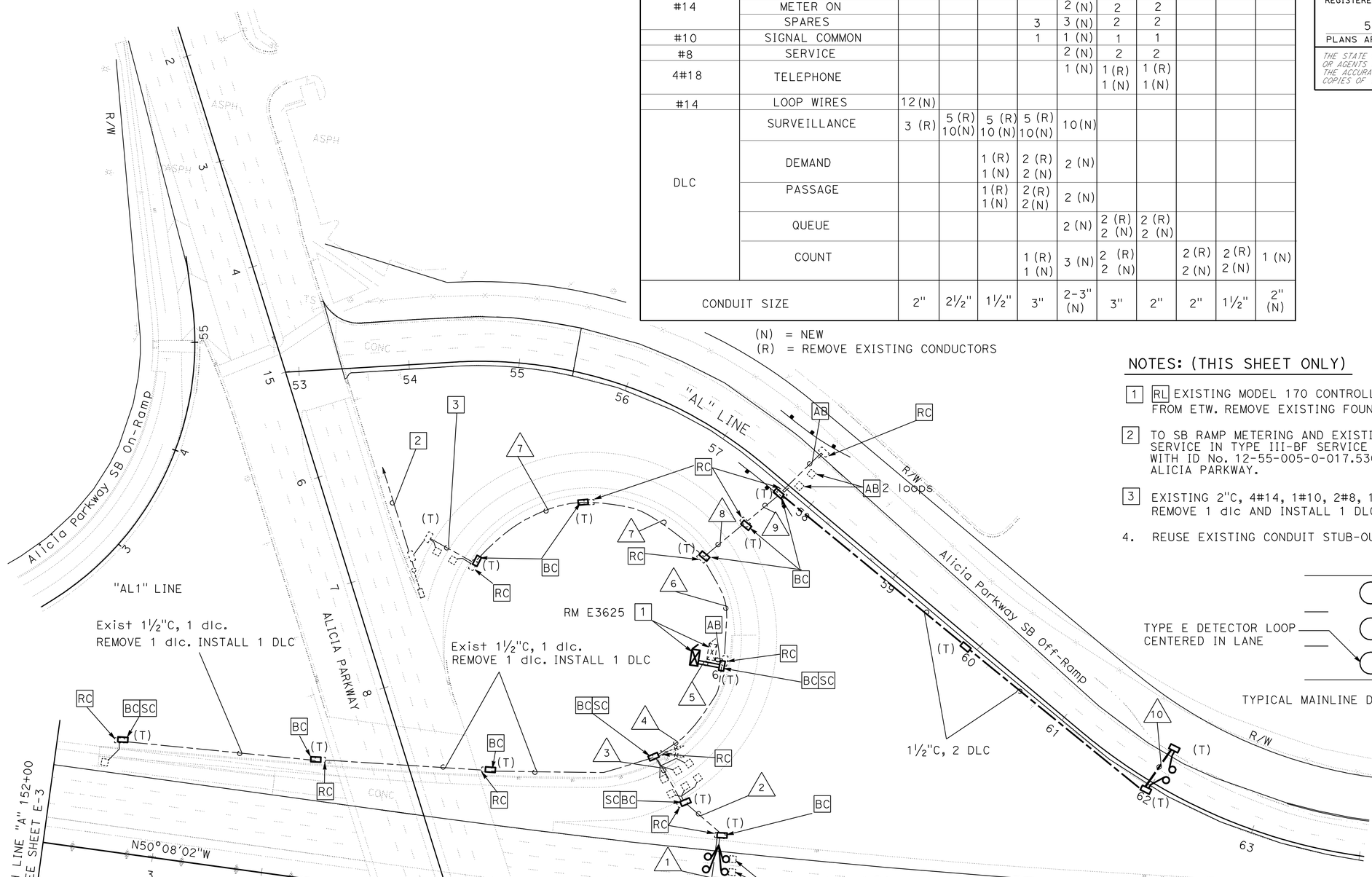

NOTES: (THIS SHEET ONLY)

1 RL EXISTING MODEL 170 CONTROLLER IN MODEL 334 CABINET 30 FEET FROM ETW. REMOVE EXISTING FOUNDATION COMPLETELY.

2 TO SB RAMP METERING AND EXISTING 120/240 V METERED SERVICE IN TYPE III-BF SERVICE EQUIPMENT ENCLOSURE WITH ID No. 12-55-005-0-017.536 ADDRESS- 24499 ALICIA PARKWAY.

3 EXISTING 2"C, 4#14, 1#10, 2#8, 1-4#18, 1 dlc. REMOVE 1 dlc AND INSTALL 1 DLC.

4. REUSE EXISTING CONDUIT STUB-OUT.

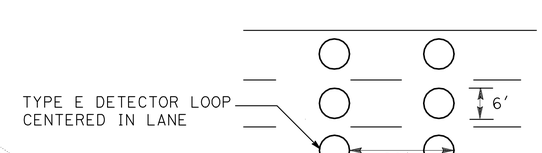

TYPICAL MAINLINE DETECTOR LOOPS SPACING DETAIL
NO SCALE

MODIFY RAMP METERING SYSTEM
(LOCATION 1)

SCALE: 1" = 50'

THIS PLAN IS ACCURATE FOR ELECTRICAL WORK ONLY.

E-4

STATE OF CALIFORNIA - DEPARTMENT OF TRANSPORTATION
Caltrans ELECTRICAL DESIGN
FUNCTIONAL SUPERVISOR: SHAHRAM SHAHRIARI
CALCULATED-DESIGNED BY: MINA ZOLFAGHARI
CHECKED BY: VANESSA TRUONG
REVISED BY
DATE REVISED

LAST REVISION 07-19-10
DATE PLOTTED => 26-AUG-2011
TIME PLOTTED => 10:47

Dist	COUNTY	ROUTE	POST MILES TOTAL PROJECT	SHEET No.	TOTAL SHEETS
12	Ora	5	17.1/17.8	44	81

Mina Zolfaghari 04-28-11
REGISTERED ELECTRICAL ENGINEER DATE

5-23-11
PLANS APPROVAL DATE

REGISTERED PROFESSIONAL ENGINEER MINA ZOLFAGHARI No. E 16816 Exp. 12/31/12 ELECTRICAL STATE OF CALIFORNIA

THE STATE OF CALIFORNIA OR ITS OFFICERS OR AGENTS SHALL NOT BE RESPONSIBLE FOR THE ACCURACY OR COMPLETENESS OF SCANNED COPIES OF THIS PLAN SHEET.

NOTE:

FOR ACCURATE RIGHT OF WAY DATA,
CONTACT RIGHT OF WAY ENGINEERING AT THE DISTRICT OFFICE.

NOTES: (THIS SHEET ONLY)

1. EXISTING MODEL 170 CONTROLLER AND TELEPHONE BRIDGE IN MODEL 334 CABINET.
2. TO NB RAMP METERING AND EXISTING 120/240 V METERED SERVICE IN TYPE III-BF SERVICE EQUIPMENT ENCLOSURE WITH ID No. 12-55-005-0-017.550 ADDRESS 24499 ALICIA PARKWAY.
3. EXISTING TYPE R SERVICE EQUIPMENT ENCLOSURE WITH 240/480 V METER No. 115-4667 FEEDING SB OFF RAMP SIGNAL, SEE SHEET E-2.
4. INSTALL TYPE 1 PEDESTRIAN BARRICADE WITH SIGN R9-3A.
5. EXISTING MODEL 170 CONTROLLER IN MODEL 334 CABINET.
6. REUSE EXISTING CONDUIT STUB-OUT.

ABBREVIATION:

SCE SOUTHERN CALIFORNIA EDISON

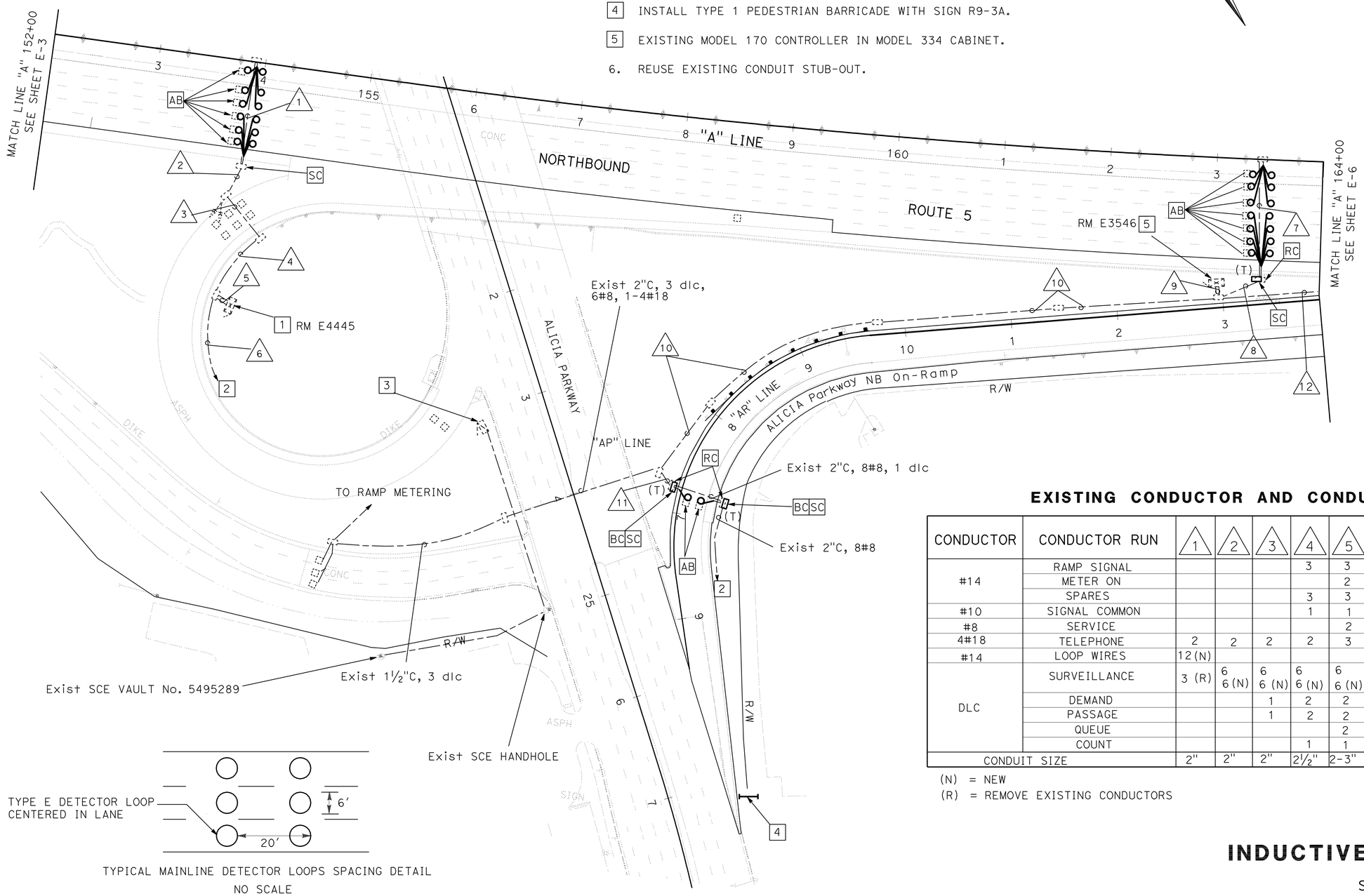

TYPICAL MAINLINE DETECTOR LOOPS SPACING DETAIL
NO SCALE

EXISTING CONDUCTOR AND CONDUIT SCHEDULE

CONDUCTOR	CONDUCTOR RUN	1	2	3	4	5	6	7	8	9	10	11	12
#14	RAMP SIGNAL				3	3				3			3
	METER ON					2	2			2	2	2	
	SPARES				3	3	2			3			3
#10	SIGNAL COMMON				1	1	1			1	1	1	1
#8	SERVICE					2	2			2	2	8	
4#18	TELEPHONE	2	2	2	2	3	1			1	1		
#14	LOOP WIRES	12 (N)						12 (N)					
DLC	SURVEILLANCE	3 (R)	6 6 (N)	6 6 (N)	6 6 (N)	6 6 (N)		3 (R)	7 7 (N)	7 7 (N)			
	DEMAND			1	2	2				2			2
	PASSAGE			1	2	2				2			2
	QUEUE					2	2			2	2	2	
	COUNT				1	1				4	3		1
CONDUIT SIZE		2"	2"	2"	2½"	2-3"	1½"	2"	2"	2-3"	1½"	2"	2"

(N) = NEW
(R) = REMOVE EXISTING CONDUCTORS

INDUCTIVE LOOP DETECTOR

SCALE: 1" = 50'

THIS PLAN IS ACCURATE FOR ELECTRICAL WORK ONLY.

E-5

STATE OF CALIFORNIA - DEPARTMENT OF TRANSPORTATION
Caltrans ELECTRICAL DESIGN

FUNCTIONAL SUPERVISOR: SHAHRAM SHAHRIARI
CALCULATED-DESIGNED BY: MINA ZOLFAGHARI
CHECKED BY: VANESSA TRUONG
REVISED BY / DATE REVISED

LAST REVISION 07-19-10
DATE PLOTTED => 26-AUG-2011
TIME PLOTTED => 10:47

Dist	COUNTY	ROUTE	POST MILES TOTAL PROJECT	SHEET No.	TOTAL SHEETS
12	Ora	5	17.1/17.8	45	81

Mina Zolfaghari 04-28-11
REGISTERED ELECTRICAL ENGINEER DATE

5-23-11
PLANS APPROVAL DATE

REGISTERED PROFESSIONAL ENGINEER MINA ZOLFAGHARI No. E 16816 Exp. 12/31/12 ELECTRICAL STATE OF CALIFORNIA

THE STATE OF CALIFORNIA OR ITS OFFICERS OR AGENTS SHALL NOT BE RESPONSIBLE FOR THE ACCURACY OR COMPLETENESS OF SCANNED COPIES OF THIS PLAN SHEET.

NOTE:

FOR ACCURATE RIGHT OF WAY DATA,
CONTACT RIGHT OF WAY ENGINEERING AT THE DISTRICT OFFICE.

NOTES: (THIS SHEET ONLY)

1. REUSE EXISTING CONDUIT STUB-OUT.

EXISTING CONDUCTOR AND CONDUIT SCHEDULE

CONDUCTOR	CONDUCTOR RUN	1	2	3
#14	RAMP SIGNAL		3	3
	SPARES		3	3
#10	SIGNAL COMMON		1	1
DLC	DEMAND		1	2
	PASSAGE		1	2
	COUNT	1	1	1
CONDUIT SIZE		1½"	2"	2"

NOTES: (RAMP METERING SIGNAL)

A. EXISTING TYPE 1-A STANDARD

B. EXISTING 3-SECTION, 12" SIGNAL HEAD (RED, YELLOW, GREEN).

C. RC 2-SECTION 8" SIGNAL HEAD (RED, GREEN) AND BACKPLATE. INSTALL 2-SECTION, 12" SIGNAL HEAD (RED, GREEN), 12" FULL CIRCLE VISORS. TYPE SV-1-T BRACKET MOUNTING ON SIDE OF STANDARD AWAY FROM TRAFFIC.

D. EXISTING BACKPLATE.

E. RL EXISTING R89-1 SIGN ON THE NEW BACK PLATE AND CENTER BETWEEN GREEN SECTION AND BOTTOM OF BACK PLATE AND SIDES. ATTACH WITH ¼" ALUMINUM BLIND RIVETS OR CALVANIZED ¼"X ¾" BOLTS, HEX NUTS, PLAIN AND LOCK WASHERS.

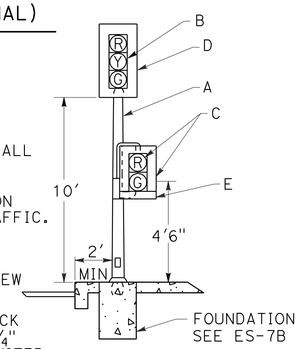

RAMP METERING SIGNAL

DETAIL A

NO SCALE

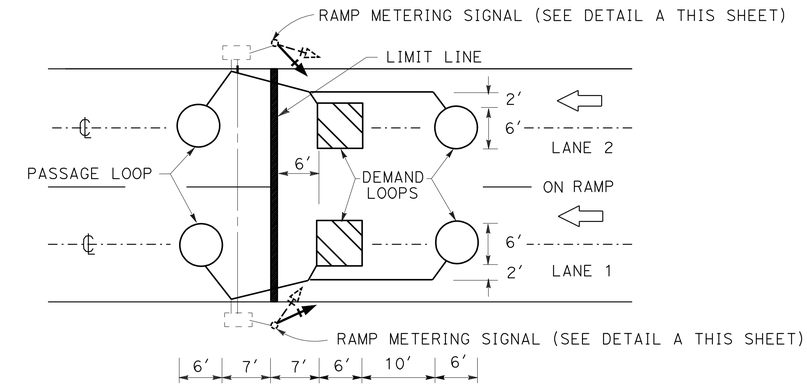

TYPICAL 2-LANE RAMP

METERING INSTALLATION

NO SCALE

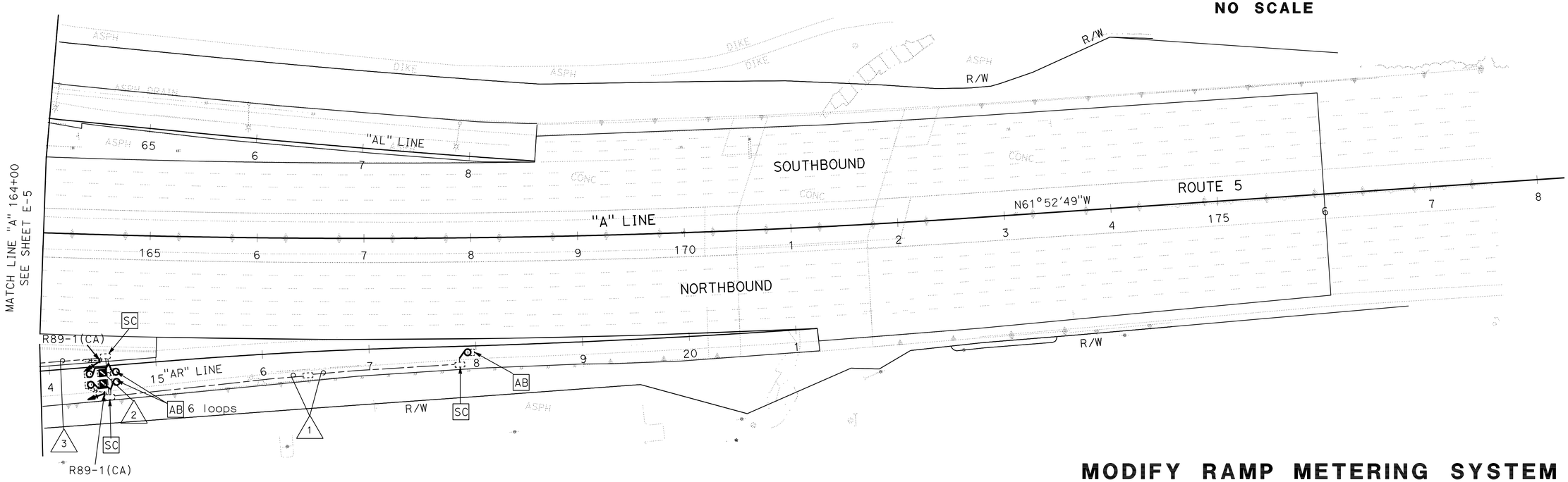

MODIFY RAMP METERING SYSTEM

(LOCATION 2)

SCALE: 1" = 50'

THIS PLAN IS ACCURATE FOR ELECTRICAL WORK ONLY.

E-6

STATE OF CALIFORNIA - DEPARTMENT OF TRANSPORTATION
Caltrans® **ELECTRICAL DESIGN**

FUNCTIONAL SUPERVISOR: SHAHRAM SHAHRIARI
CALCULATED-DESIGNED BY: MINA ZOLFAGHARI
CHECKED BY: VANESSA TRUONG
REVISED BY
DATE REVISED

LAST REVISION DATE PLOTTED => 26-AUG-2011
07-19-10 TIME PLOTTED => 10:47

DIST	COUNTY	ROUTE	POST MILES TOTAL PROJECT	SHEET NO.	TOTAL SHEETS
12	Ora	5	17.1/17.8	46	81

REGISTERED CIVIL ENGINEER

June 6, 2008
PLANS APPROVAL DATE

REGISTERED PROFESSIONAL ENGINEER
Donald E. Howe
No. C46402
Exp. 3-31-09
CIVIL
STATE OF CALIFORNIA

The State of California or its officers or agents shall not be responsible for the accuracy or completeness of electronic copies of this plan sheet.

To accompany plans dated 5-23-11

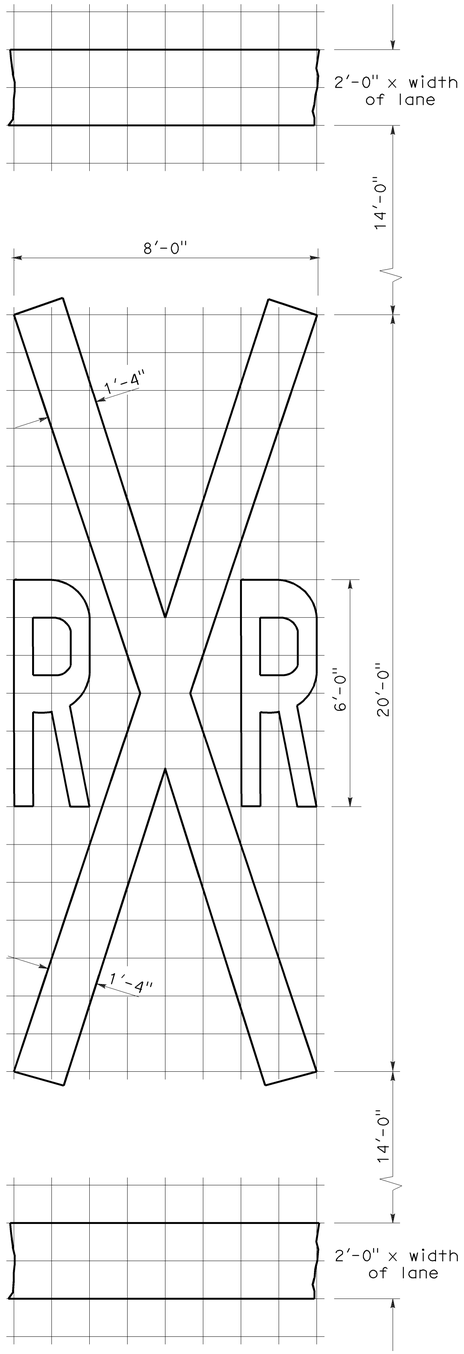

RAILROAD CROSSING SYMBOL

✳70 sq ft DOES NOT INCLUDE THE 2'-0" x VARIABLE WIDTH TRANSVERSE LINES.

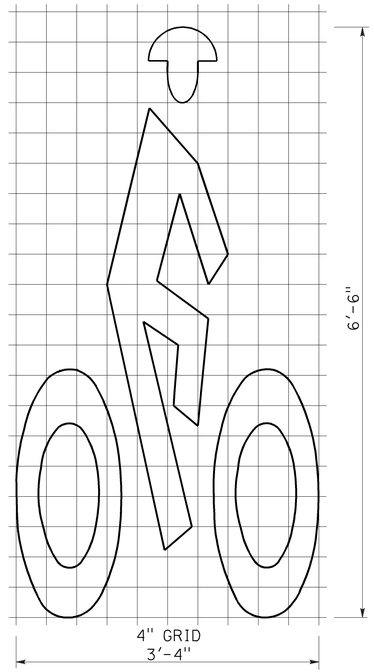

BIKE LANE SYMBOL

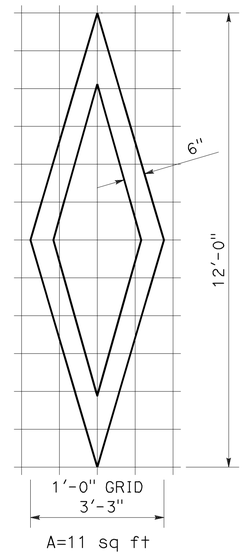

DIAMOND SYMBOL

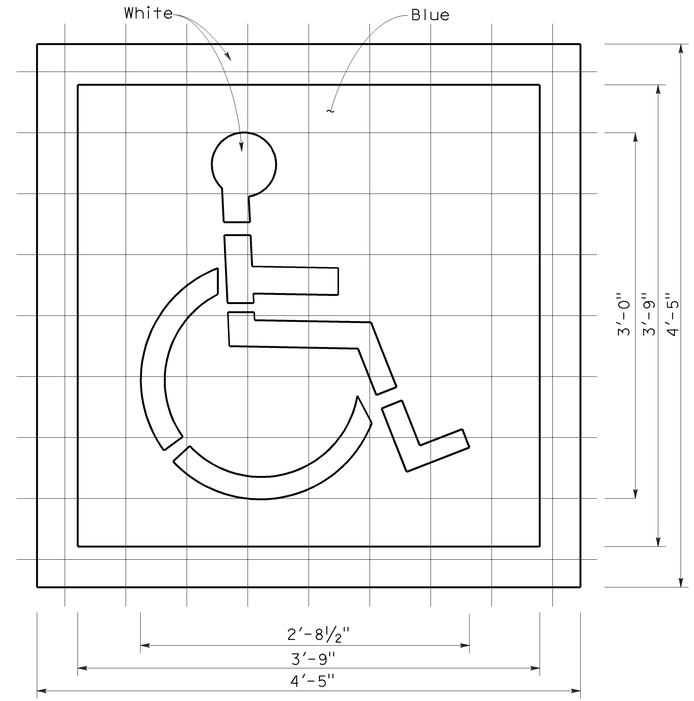

INTERNATIONAL SYMBOL OF ACCESSIBILITY MARKING

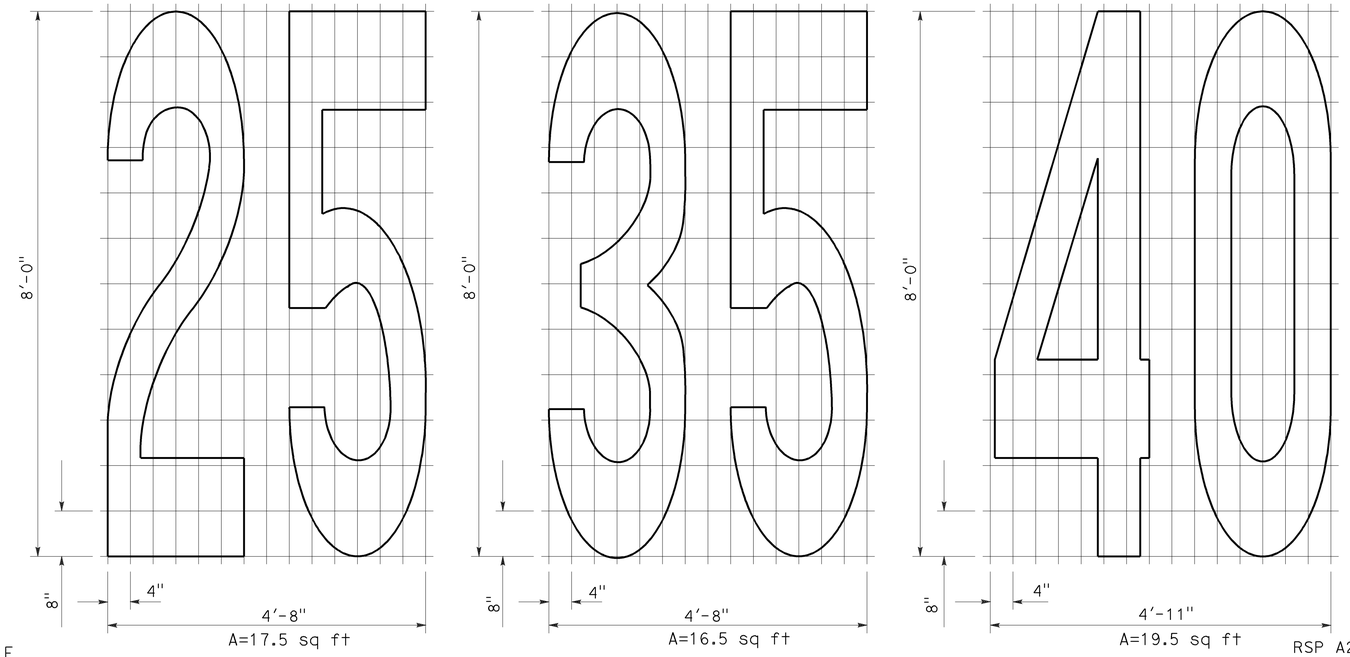

NUMERALS

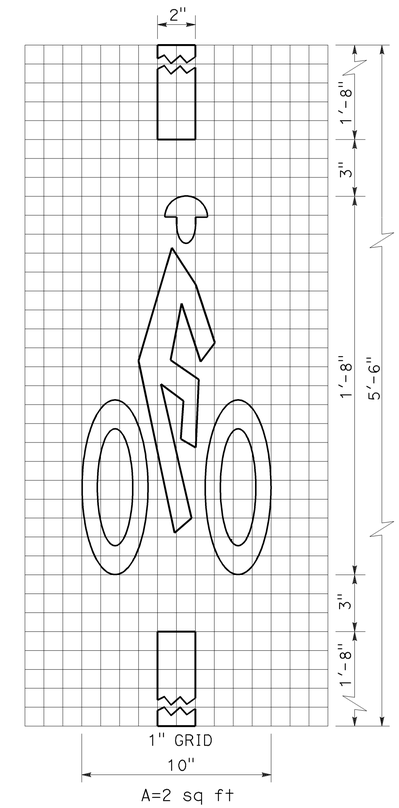

BICYCLE LOOP DETECTOR SYMBOL

NOTE:

1. Minor variations in dimensions may be accepted by the Engineer.

STATE OF CALIFORNIA
DEPARTMENT OF TRANSPORTATION

PAVEMENT MARKINGS SYMBOLS AND NUMERALS

NO SCALE

RSP A24C DATED JUNE 6, 2008 SUPERSEDES STANDARD PLAN A24C DATED MAY 1, 2006 - PAGE 11 OF THE STANDARD PLANS BOOK DATED MAY 2006.

REVISED STANDARD PLAN RSP A24C

2006 REVISED STANDARD PLAN RSP A24C

5-27-08

Dist	COUNTY	ROUTE	POST MILES TOTAL PROJECT	SHEET No.	TOTAL SHEETS
12	Ora	5	17.1/17.8	47	81

Randell D. Hiatt
REGISTERED CIVIL ENGINEER

May 20, 2011
PLANS APPROVAL DATE

REGISTERED PROFESSIONAL ENGINEER Randell D. Hiatt No. C50200 Exp. 6-30-11 CIVIL STATE OF CALIFORNIA

The State of California or its officers or agents shall not be responsible for the accuracy or completeness of electronic copies of this plan sheet.

To accompany plans dated 5-23-11

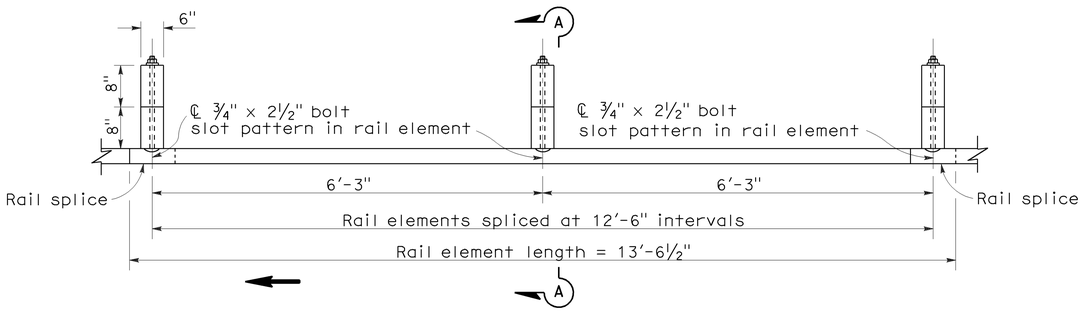

PLAN

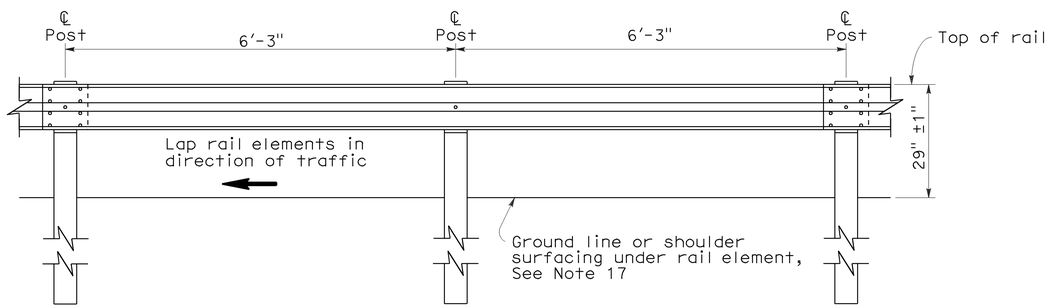

ELEVATION

METAL BEAM GUARD RAILING WITH WOOD POST AND BLOCKS

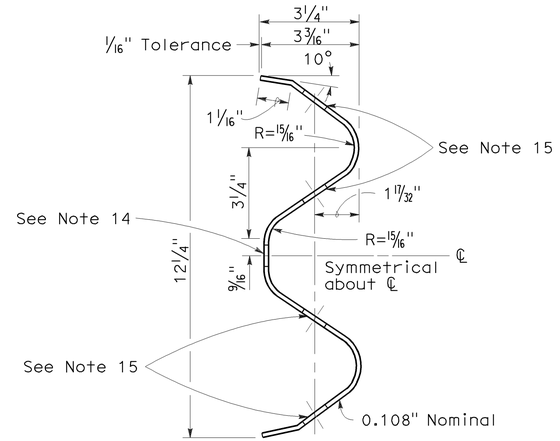

SECTION THRU RAIL ELEMENT

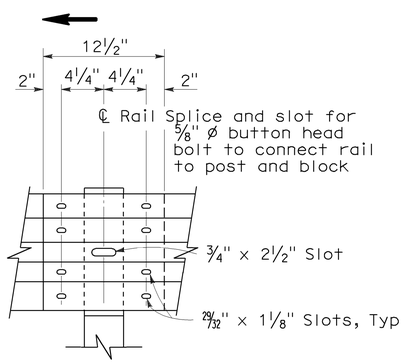

ELEVATION

RAIL ELEMENT SPLICE DETAIL

a) Connect the over lapped end of the rail elements with ⅝" ø x 1⅜" button head oval shoulder splice bolts inserted into the 29⁄32" x 1⅛" slots and bolted together with ⅝" ø recessed hex nuts. Recess of hex nut points toward rail element. A total of 8 bolts and nuts are to be used at each rail splice connection.

b) The ends of the rail elements are to be overlapped in the direction of traffic (see details).

c) Where end cap is to be attached to the end of a rail element, a total of 4 of the above described splice bolts and nuts are to be used.

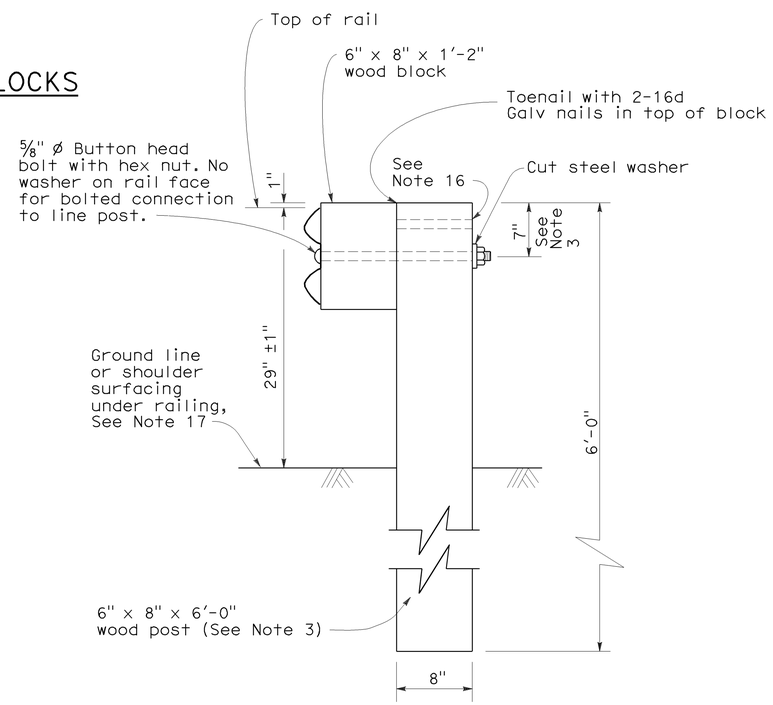

SECTION A-A

TYPICAL WOOD LINE POST INSTALLATION

See Note 4

NOTES:

1. For details of steel post installations, see Standard Plan A77A2.
2. For details of standard hardware used to construct guard railing, see Standard Plan A77B1.
3. For details of wood posts and wood blocks used to construct guard railing, see Standard Plan A77C1.
4. For additional installation details, see Standard Plan A77C3.
5. Guard railing post spacing to be 6'-3" center to center, except as otherwise noted.
6. For guard railing typical layouts, see the A77E, A77F and A77G Series of Standard Plans.
7. For terminal system end treatment details, see the A77L Series of Standard Plans. To connect railing to terminal system end treatment, transition the top of railing height at a ratio of 120:1 to terminal system end treatment height plus one 12'-6" standard railing section at the transitioned height for a horizontal connection to the end treatment.
8. For guard railing end anchor details, see Standard Plans A77H1 and A77I2.
9. For details of guard railing transition to bridge railing, see Standard Plan A77J4.
10. For additional details of guard railing connection to bridge railings, see Standard Plans A77J1, A77J2 and A77K1.
11. For guard railing connection details to abutments and walls, see Standard Plan A77J3.
12. Direction of adjacent traffic indicated by ➡.
13. For typical guard railing delineation and dike positioning details, see Standard Plan A77C4.
14. Slotted hole for bolted connection of rail element to block and post. See "Section Thru Rail Element".
15. Slotted holes for splice bolts to overlap ends of rail element. See "Section Thru Rail Element".
16. Additional hole in uppermost portion of line post is for potential future adjustments of railing height. See Standard Plan A77C1.
17. Install posts in soil.

STATE OF CALIFORNIA
DEPARTMENT OF TRANSPORTATION

METAL BEAM GUARD RAILING STANDARD RAILING SECTION (WOOD POST WITH WOOD BLOCK)

NO SCALE

RSP A77A1 DATED MAY 20, 2011 SUPERSEDES STANDARD PLAN A77A1 DATED MAY 1, 2006 - PAGE 41 OF THE STANDARD PLANS BOOK DATED MAY 2006.

REVISED STANDARD PLAN RSP A77A1

2006 REVISED STANDARD PLAN RSP A77A1

3-10-11

To accompany plans dated 5-23-11

Dist	COUNTY	ROUTE	POST MILES TOTAL PROJECT	SHEET No.	TOTAL SHEETS
12	Ora	5	17.1/17.8	48	81

Randell D. Hiatt
REGISTERED CIVIL ENGINEER

May 20, 2011
PLANS APPROVAL DATE

REGISTERED PROFESSIONAL ENGINEER
Randell D. Hiatt
No. C50200
Exp. 6-30-11
CIVIL
STATE OF CALIFORNIA

The State of California or its officers or agents shall not be responsible for the accuracy or completeness of electronic copies of this plan sheet.

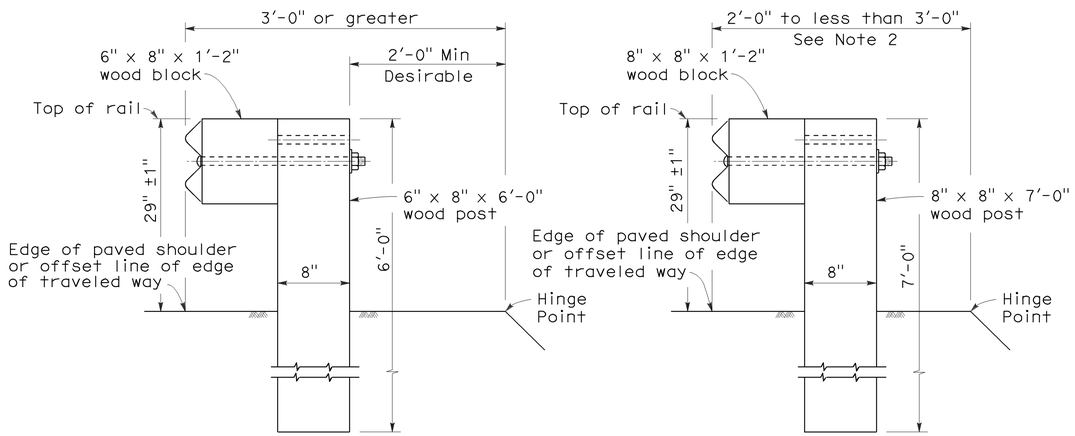

DETAIL A
TYPICAL ROADWAY INSTALLATION
See Note 1

DETAIL B
NARROW ROADWAY INSTALLATION
See Note 1

POST EMBEDMENT

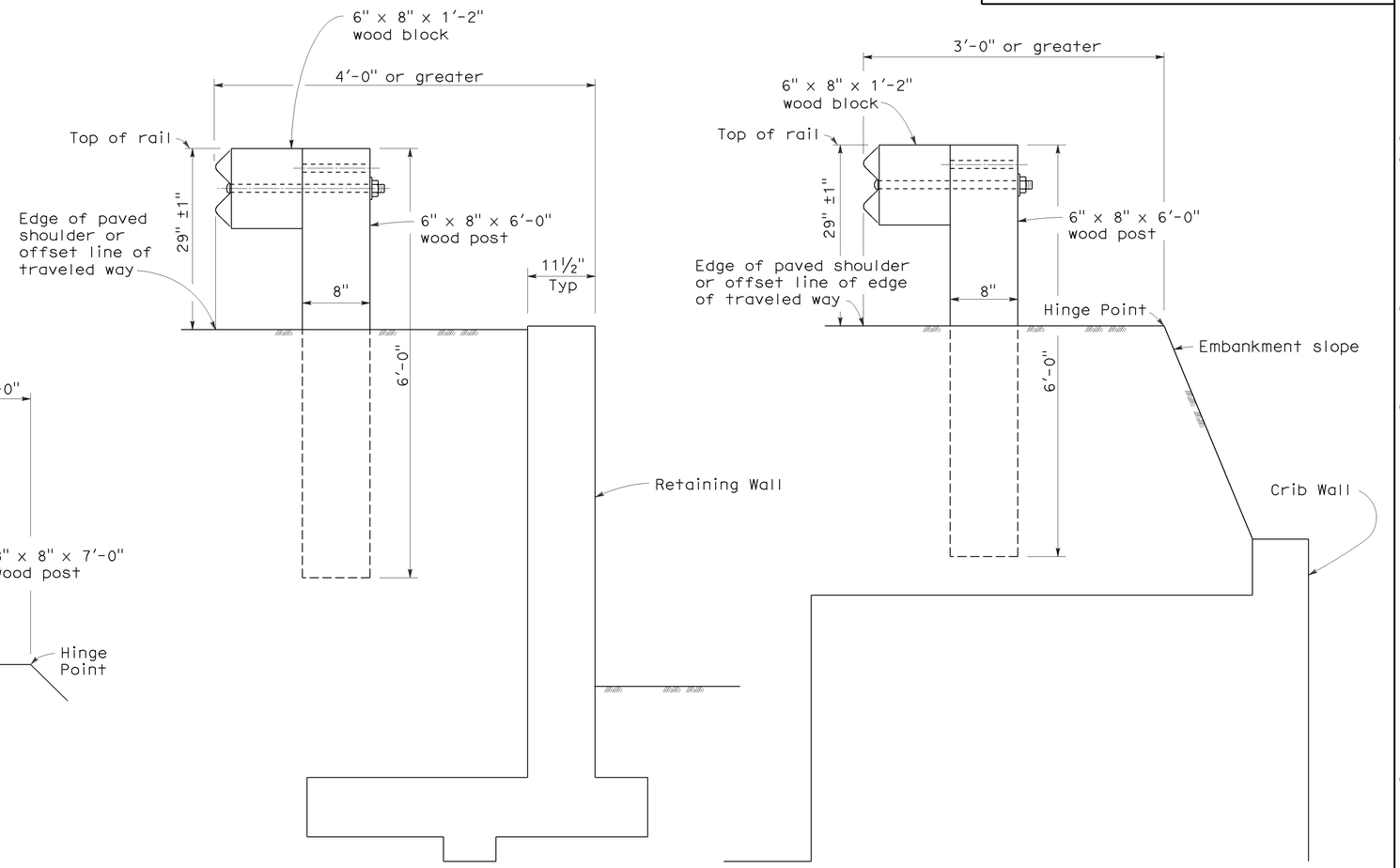

DETAIL C

DETAIL D

INSTALLATION AT EARTH RETAINING WALLS

NOTES:

1. These installation details also applicable to steel line post installations. For Detail A, C, and D, where steel line post installations are constructed, W6 x 9 steel post, 6'-0" in length, with 6" x 8" x 1'-2" notched wood blocks or notched recycled plastic blocks are to be used in place of the size of wood post and wood block shown. For Detail B, where steel line post installations are constructed, W6 x 9 steel post, 7'-0" in length, with 6" x 8" x 1'-2" notched wood blocks or notched recycled plastic blocks are to be used in place of the size of wood post and wood block shown. For additional installation details, see Standard Plans A77A1 and A77A2.
2. Where the distance between the face of the rail and the hinge point is less than 2'-0", see the Project Plans for special details.
3. For dike positioning with guard railing installations, see Standard Plan A77C4.

STATE OF CALIFORNIA
DEPARTMENT OF TRANSPORTATION

METAL BEAM GUARD RAILING TYPICAL LINE POST EMBEDMENT AND HINGE POINT OFFSET DETAILS

NO SCALE

RSP A77C3 DATED MAY 20, 2011 SUPERSEDES STANDARD PLAN A77C3
DATED MAY 1, 2006 - PAGE 46 OF THE STANDARD PLANS BOOK DATED MAY 2006.

REVISED STANDARD PLAN RSP A77C3

2006 REVISED STANDARD PLAN RSP A77C3

3-10-11

Dist	COUNTY	ROUTE	POST MILES TOTAL PROJECT	SHEET No.	TOTAL SHEETS
12	Ora	5	17.1/17.8	49	81

Randell D. Hiatt
REGISTERED CIVIL ENGINEER

May 20, 2011
PLANS APPROVAL DATE

REGISTERED PROFESSIONAL ENGINEER
Randell D. Hiatt
No. C50200
Exp. 6-30-11
CIVIL
STATE OF CALIFORNIA

The State of California or its officers or agents shall not be responsible for the accuracy or completeness of electronic copies of this plan sheet.

To accompany plans dated 5-23-11

NOTES:

1. When necessary to place dike in front of face of guard railing, only Type C dike may be used. For dike details, see Standard Plan A87B.
2. For standard railing post embedment, see Standard Plans A77C3.
3. Guard railing delineation to be used where shown on the Project Plans.
4. When dike or curb is placed under guard railing, the maximum height of the dike or curb shall be 4". Mountable dike should not be used. For dike and curb details, see Standard Plans A87A and A87B.
5. For details of typical distance between the face of rail and hinge point, see Standard Plan A77C3.
6. For steel line posts, use 1/4 - 20 self-tapping screws in 0.22" diameter holes or 1/4" bolts in 9/32" diameter holes.

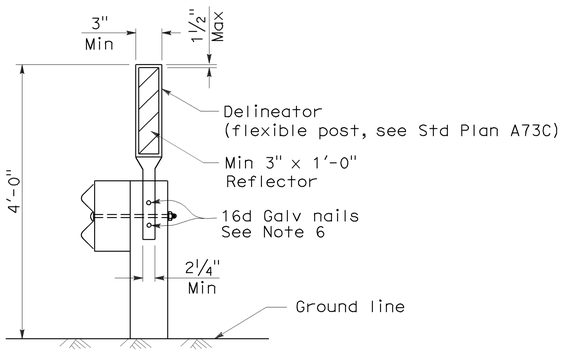

GUARD RAILING DELINEATION

See Note 3

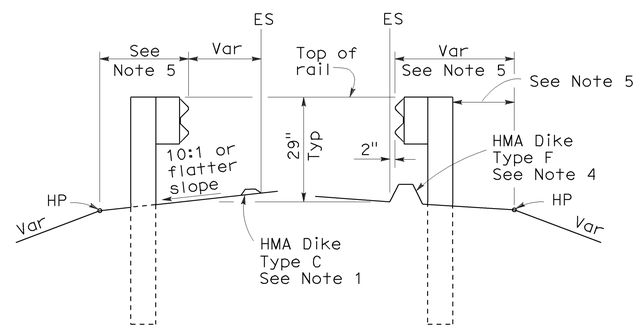

DIKE POSITIONING

See Note 1

STATE OF CALIFORNIA
DEPARTMENT OF TRANSPORTATION

METAL BEAM GUARD RAILING TYPICAL RAILING DELINEATION AND DIKE POSITIONING DETAILS

NO SCALE

RSP A77C4 DATED MAY 20, 2011 SUPERSEDES RSP A77C4 DATED JUNE 6, 2008 AND STANDARD PLAN A77C4 DATED MAY 1, 2006 - PAGE 47 OF THE STANDARD PLANS BOOK DATED MAY 2006.

REVISED STANDARD PLAN RSP A77C4

2006 REVISED STANDARD PLAN RSP A77C4

3-10-11

DIST	COUNTY	ROUTE	POST MILES TOTAL PROJECT	SHEET NO.	TOTAL SHEETS
12	Ora	5	17.1/17.8	50	81

Randell D. Hiatt
REGISTERED CIVIL ENGINEER

June 6, 2008
PLANS APPROVAL DATE

REGISTERED PROFESSIONAL ENGINEER Randell D. Hiatt No. C50200 Exp. 6-30-09 CIVIL STATE OF CALIFORNIA

The State of California or its officers or agents shall not be responsible for the accuracy or completeness of electronic copies of this plan sheet.

To accompany plans dated 5-23-11

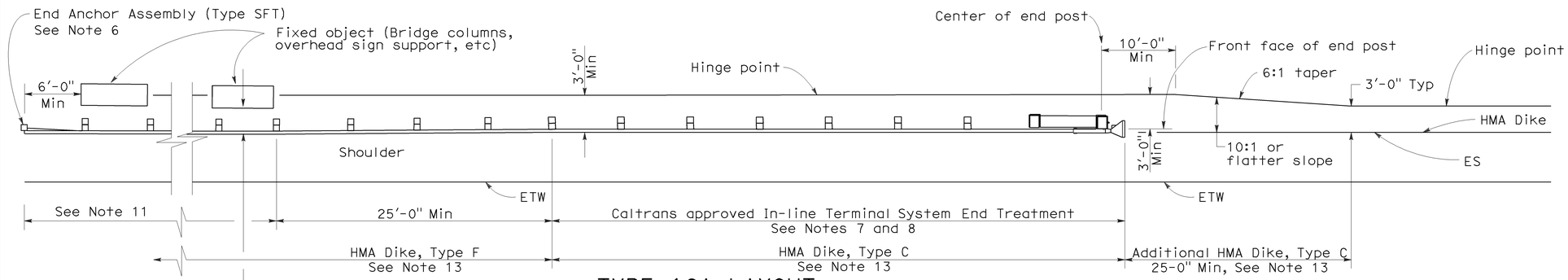

TYPE 16A LAYOUT

(GUARD RAILING INSTALLATION AT ROADSIDE FIXED OBJECT OR OBJECTS WITH AN IN-LINE END TREATMENT AT TRAFFIC APPROACH END OF RAILING)
See Notes 12 and 13

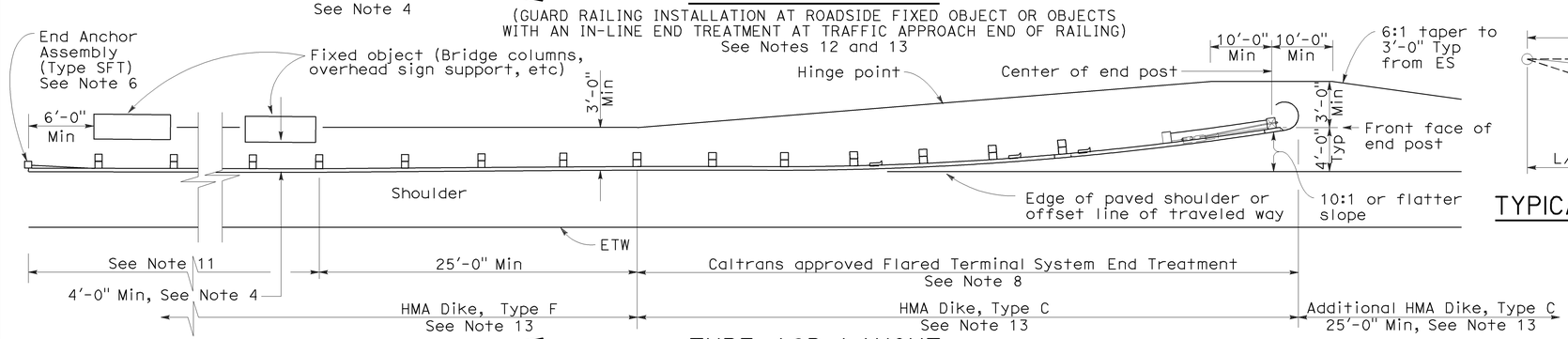

TYPE 16B LAYOUT

(GUARD RAILING INSTALLATION AT ROADSIDE FIXED OBJECT OR OBJECTS WITH A FLARED END TREATMENT AT TRAFFIC APPROACH END OF RAILING)
See Notes 12 and 13

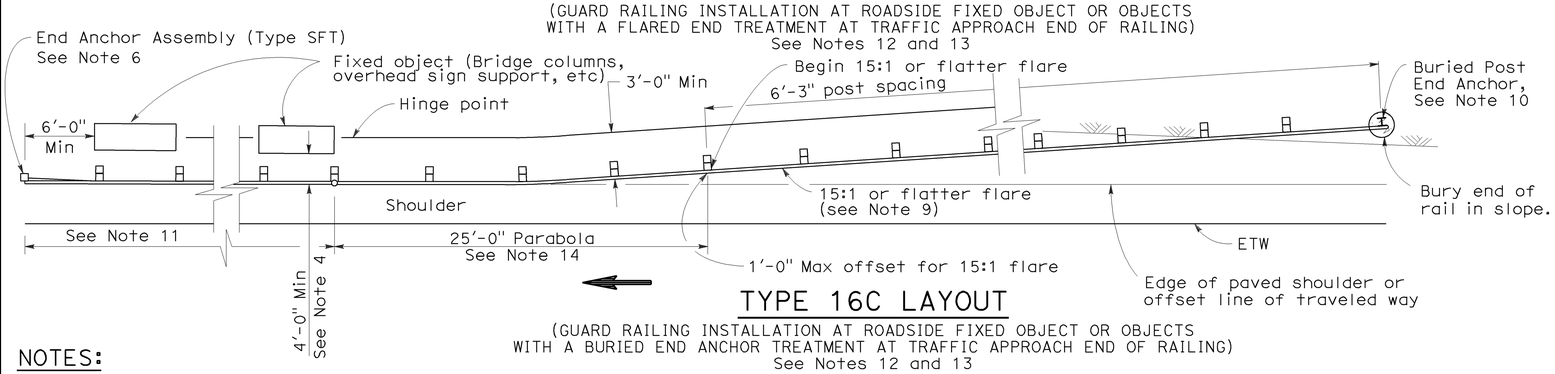

TYPE 16C LAYOUT

(GUARD RAILING INSTALLATION AT ROADSIDE FIXED OBJECT OR OBJECTS WITH A BURIED END ANCHOR TREATMENT AT TRAFFIC APPROACH END OF RAILING)
See Notes 12 and 13

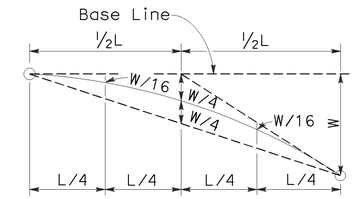

TYPICAL PARABOLIC LAYOUT

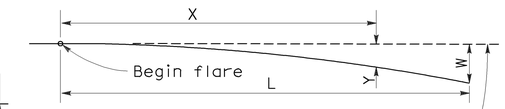

Base Line (Edge of paved shoulder or offset line of edge of traveled way)

$$Y = \frac{WX^2}{L^2}$$

Y = Offset from base line
W = Maximum offset
X = Distance along base line
L = Length of flare

PARABOLIC FLARE OFFSETS

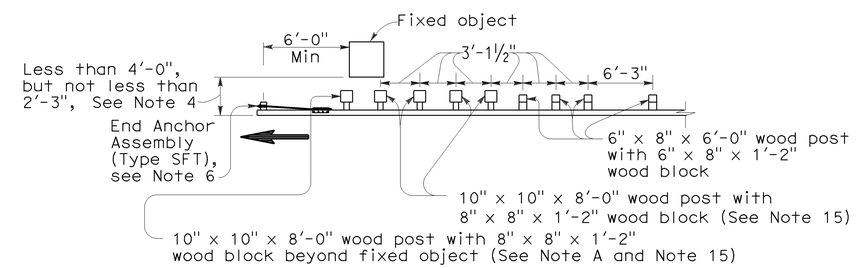

NOTE A: For a series of fixed objects (bridge columns, overhead sign supports, etc.) additional 10" x 10" x 8'-0" wood post with 8" x 8" x 1'-2" wood blocks at 3'-1½" center to center spacing are to be used between fixed objects.

STRENGTHENED RAILING SECTIONS FOR FIXED OBJECT

Use strengthened railing sections with Types 16A, 16B or 16C Layouts where minimum clearance between the face of the guard railing and fixed object(s) is less than 4'-0", but not less than 2'-3". See Note 4

NOTES:

1. Line post, blocks and hardware to be used are shown on Revised Standard Plans A77A1, A77A2, A77B1, A77C1 and A77C2.
2. Guard railing post spacing to be 6'-3" center to center, except as otherwise noted.
3. Except as noted, line posts are 6" x 8" x 6'-0" wood with 6" x 8" x 1'-2" wood blocks. W6 x 9 steel posts, 6'-0" in length, with 6" x 8" x 1'-2" notched wood blocks or notched recycled plastic blocks may be used for 6" x 8" x 6'-0" wood line posts with 6" x 8" x 1'-2" wood blocks where applicable and when specified.
4. A 4'-0" minimum clearance is required between the face of the railing and the face of a fixed object located directly behind standard guard railing sections with post spacing of 6'-3". Construct guard railing as shown in the detail "Strengthened Railing Sections for Fixed Objects" on this plan, where the clearance between the face of the railing and the face of a fixed object is less than 4'-0", but not less than 2'-3". Where the clearance is less than 2'-3", a concrete wall or barrier should be constructed to shield the fixed object(s).
5. Direction of adjacent traffic indicated by ⟶.
6. For End Anchor Assembly (Type SFT) details, see Standard Plan A77H1.
7. In-line Terminal System End Treatments are used where site conditions will not accommodate a flared end treatment.
8. The type of terminal system to be used will be shown on the Project Plans.
9. The 15:1 or flatter flare used with Type 16C Layout is based on the edge of the paved shoulder or offset line of edge of the traveled way. The length of guard railing within the 15:1 or flatter flare is based on site conditions and should be a length equal to multiples of 12'-6".
10. For details of the Buried Post End Anchor used with Type 16C Layout, see Standard Plan A77I2.
11. As site conditions dictate, construct additional guard railing to shield fixed object(s). Additional guard railing length equal to multiples of 12'-6". Post spacing at 6'-3" except as specified in Note 4.
12. Layout Types 16A, 16B or 16C are typically used where guard railing is recommended to shield roadside fixed object(s) and a crashworthy end treatment is required for only one direction of traffic.
13. Where placement of dike is required with guard railing, see Revised Standard Plan RSP A77C4 for dike positioning details.
14. For typical flare offsets for 25'-0" length parabola with maximum offset of 1'-0", see Revised Standard Plan RSP A77E1.
15. W6 x 15 steel post, 8'-0" in length, with 8" x 8" x 1'-2" notched wood block or notched recycled plastic blocks may be used in place of the 10" x 10" x 8'-0" wood post with 8" x 8" x 1'-2" wood block shown in the "Strengthened Railing Sections Detail".

STATE OF CALIFORNIA
DEPARTMENT OF TRANSPORTATION

METAL BEAM GUARD RAILING TYPICAL LAYOUTS FOR ROADSIDE FIXED OBJECTS

NO SCALE

RSP A77G3 DATED JUNE 6, 2008 SUPERSEDES STANDARD PLAN A77G3 DATED MAY 1, 2006 - PAGE 61 OF THE STANDARD PLANS BOOK DATED MAY 2006.

REVISED STANDARD PLAN RSP A77G3

2006 REVISED STANDARD PLAN RSP A77G3

12-10-07

Dist	COUNTY	ROUTE	POST MILES TOTAL PROJECT	SHEET No.	TOTAL SHEETS
12	Ora	5	17.1/17.8	51	81

Randell D. Hiatt
REGISTERED CIVIL ENGINEER

May 20, 2011
PLANS APPROVAL DATE

REGISTERED PROFESSIONAL ENGINEER
Randell D. Hiatt
No. C50200
Exp. 6-30-11
CIVIL
STATE OF CALIFORNIA

The State of California or its officers or agents shall not be responsible for the accuracy or completeness of electronic copies of this plan sheet.

To accompany plans dated 5-23-11

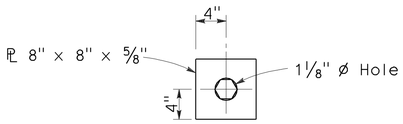

DETAIL A
CABLE CONNECTION
END PLATE

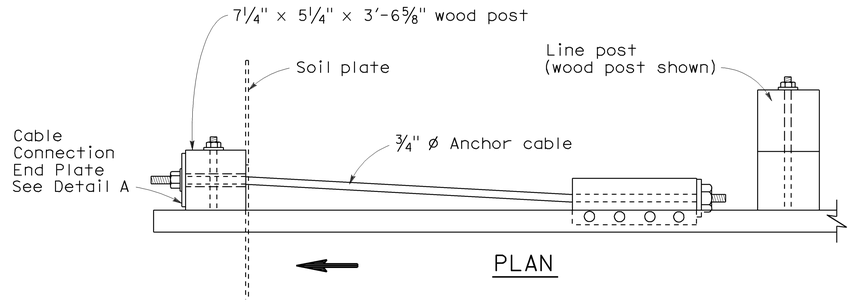

PLAN

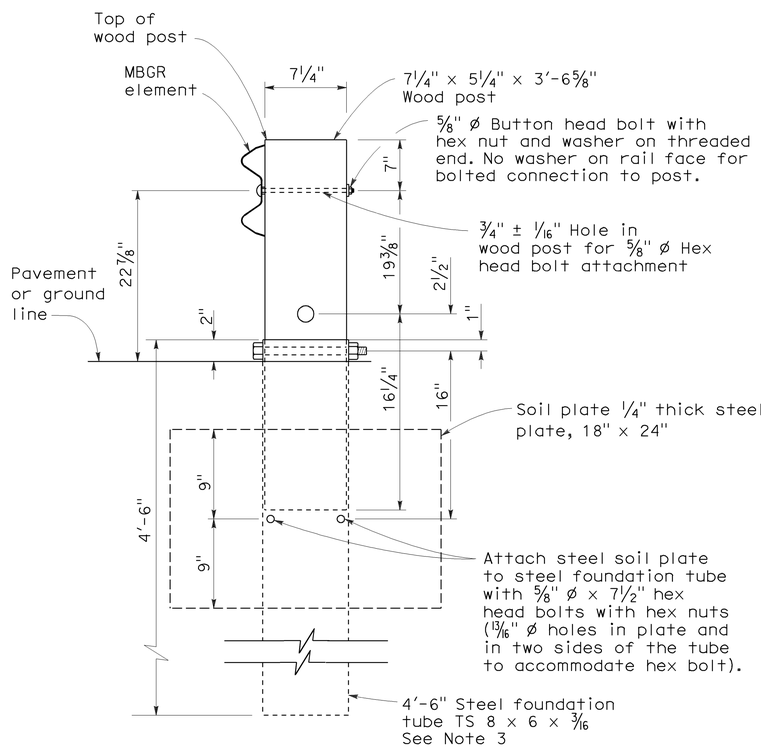

SECTION A-A

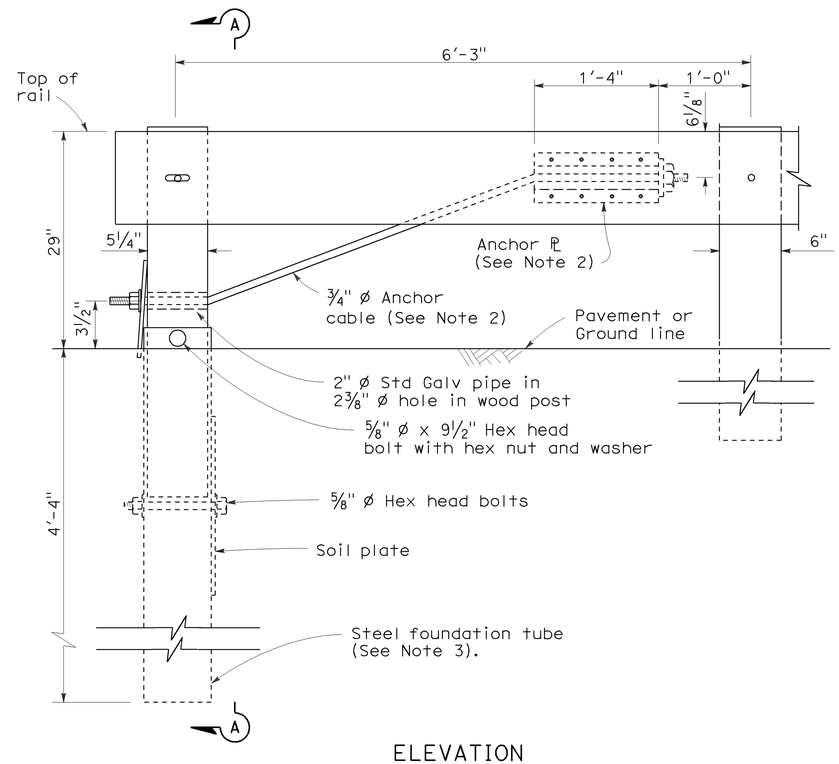

ELEVATION
END ANCHOR
ASSEMBLY (TYPE SFT)
See Note 1

NOTES:

1. See the A77E, A77F and A77G series of Standard Plans for typical use of End Anchor Assembly (Type SFT).
2. For details of the anchor plate and 3/4" cable, see Standard Plan A77H3.
3. A 6'-0" length steel foundation tube, TS 8 x 6 x 3/16, without a soil plate, may be furnished and installed in place of the 4'-6" length steel foundation tube and soil plate shown. Minimum embedment of the 6'-0" length tube shall be 5'-9". A 5/8" Ø hex head bolt and nut shall be installed in the hole in the 6'-0" length tube to keep the wood post from dropping into the tube.
4. Direction of traffic indicated by ⟹.
5. Install line post, steel foundation tube and soil plate in soil.

STATE OF CALIFORNIA
DEPARTMENT OF TRANSPORTATION

METAL RAILING END ANCHOR ASSEMBLY (TYPE SFT)

NO SCALE

RSP A77H1 DATED MAY 20, 2011 SUPERSEDES STANDARD PLAN A77H1
DATED MAY 1, 2006 - PAGE 67 OF THE STANDARD PLANS BOOK DATED MAY 2006.

REVISED STANDARD PLAN RSP A77H1

2006 REVISED STANDARD PLAN RSP A77H1

2-10-07

Dist	COUNTY	ROUTE	POST MILES TOTAL PROJECT	SHEET No.	TOTAL SHEETS
12	Ora	5	17.1/17.8	52	81

Randell D. Hiatt
REGISTERED CIVIL ENGINEER

May 20, 2011
PLANS APPROVAL DATE

REGISTERED PROFESSIONAL ENGINEER
Randell D. Hiatt
No. C50200
Exp. 6-30-11
CIVIL
STATE OF CALIFORNIA

The State of California or its officers or agents shall not be responsible for the accuracy or completeness of electronic copies of this plan sheet.

To accompany plans dated 5-23-11

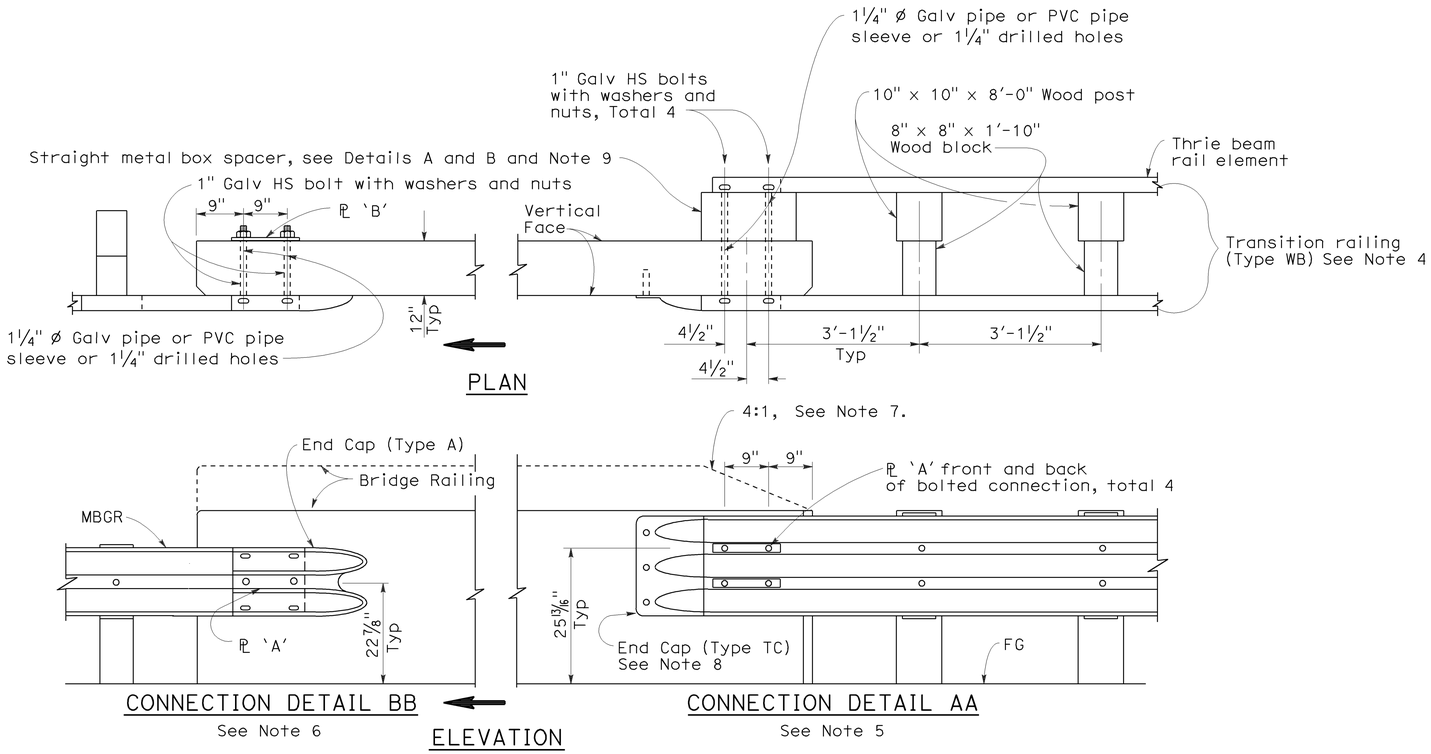

GUARD RAILING CONNECTION TO BRIDGE RAILING WITHOUT SIDEWALK

NOTES:

1. See Revised Standard Plan RSP A77J2 for additional connection details to bridges without sidewalks.
2. Additional details of posts, blocks and hardware are shown on Standard Plan A77B1, A77C1 and A77C2.
3. Direction of adjacent traffic indicated by ➡.
4. For additional details of Transition Railing (Type WB), see Standard Plan A77J4. Transition Railing (Type WB) transitions the 12 gage w-beam standard railing section of guard railing to a heavier gage nested thrie beam railing section which is connected to the concrete bridge railing.
5. For typical use of Connection Detail AA, see Layout Types 12A and 12B on Revised Standard Plan RSP A77F1, Layout Types 12C and 12D on Standard Plan A77F2, and Layout Type 12E on Revised Standard Plan RSP A77F3.
6. For typical use of Connection Detail BB, see Layout Type 12D (structure departure railing connection) on Standard Plan A77F2 and Layout Type 12DD on Standard Plan A77F5.
7. Where the height of the bridge railing exceeds the height of the thrie beam railing by more than 1" at Connection Detail AA, taper the top of the end of the bridge railing at 4:1 to match the top elevation of the thrie beam rail.
8. For details of End Cap (Type TC), see Standard Plan A77J4.
9. See Standard Plan A77J4 for additional details regarding depth dimension for straight metal box spacer.

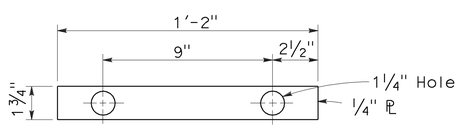

PLATE 'A'

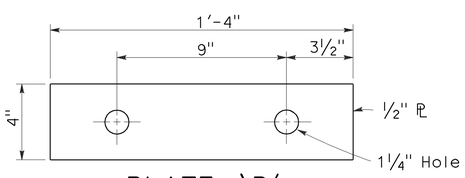

PLATE 'B'
(For backside of connection BB)

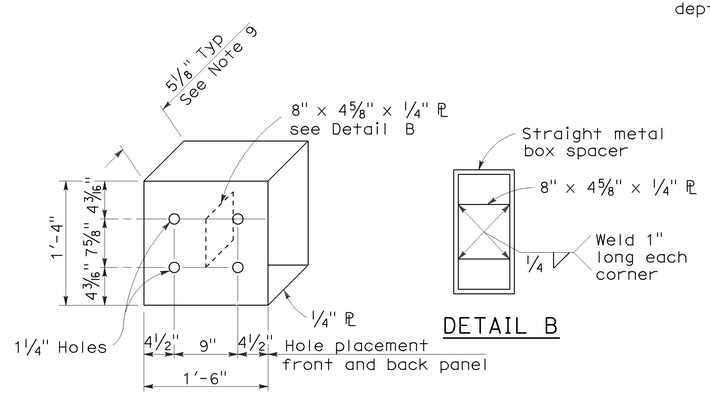

DETAIL A

DETAIL B

STRAIGHT METAL BOX SPACER

STATE OF CALIFORNIA
DEPARTMENT OF TRANSPORTATION

METAL BEAM GUARD RAILING CONNECTIONS TO BRIDGE RAILINGS WITHOUT SIDEWALKS DETAILS No.1

NO SCALE

RSP A77J1 DATED MAY 20, 2011 SUPERSEDES RSP A77J1 DATED JUNE 6, 2008 AND STANDARD PLAN A77J1 DATED MAY 1, 2006 - PAGE 72 OF THE STANDARD PLANS BOOK DATED MAY 2006.

REVISED STANDARD PLAN RSP A77J1

2006 REVISED STANDARD PLAN RSP A77J1

3-10-11

DIST	COUNTY	ROUTE	POST MILES TOTAL PROJECT	SHEET NO.	TOTAL SHEETS
12	Ora	5	17.1/17.8	53	81

Randell D. Hiatt
REGISTERED CIVIL ENGINEER

June 6, 2008
PLANS APPROVAL DATE

REGISTERED PROFESSIONAL ENGINEER Randell D. Hiatt No. C50200 Exp. 6-30-09 CIVIL STATE OF CALIFORNIA

The State of California or its officers or agents shall not be responsible for the accuracy or completeness of electronic copies of this plan sheet.

To accompany plans dated 5-23-11

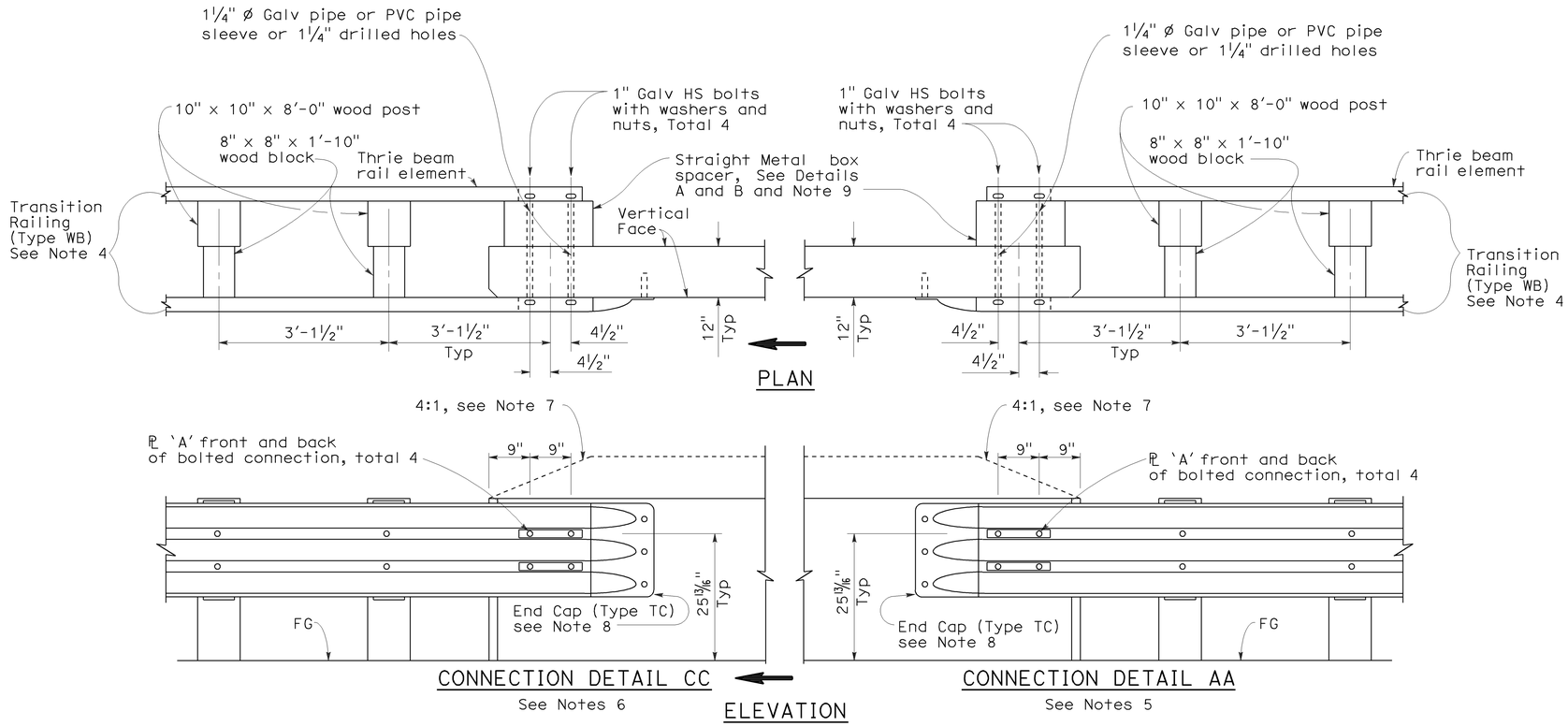

GUARD RAILING CONNECTION TO BRIDGE RAILING WITHOUT SIDEWALK

NOTES:

1. See Revised Standard Plan RSP A77J1 for additional connection details to bridges without sidewalks.
2. Additional details of posts, blocks and hardware are shown on Standard Plan A77B1, A77C1 and A77C2.
3. Direction of adjacent traffic indicated by ⟹.
4. For additional details of Transition Railing (Type WB), see Standard Plan A77J4. Transition Railing (Type WB) transitions the 12 gage w-beam standard railing section of guard railing to a heavier gage nested thrie beam railing section which is connected to the concrete bridge railing.
5. For typical use of Connection Detail AA, see Layout Types 12A and 12B on Revised Standard Plan RSP A77F1, Layout Types 12C and 12D on Standard Plan A77F2, and Layout Type 12E on Revised Standard Plan RSP A77F3.
6. For typical use of Connection Detail CC, see Layout Types 12AA and 12BB on Standard Plan A77F4 and Layout Type 12CC on Standard Plan A77F5.
7. Where the height of the bridge railing exceeds the height of the thrie beam railing by more than 1" at Connection Detail AA and connection Detail CC, taper the top of the end of the bridge railing at 4:1 to match the top elevation of the thrie beam railing.
8. For details of End Cap (Type TC), see Standard Plans A77J4.
9. See Standard Plans A77J4 for additional details regarding depth dimension for straight metal box spacer.

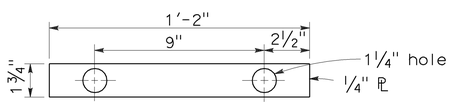

PLATE 'A'

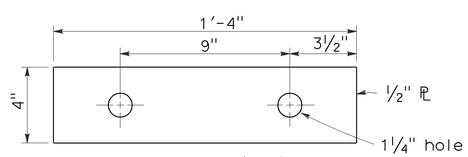

PLATE 'B'
(For backside of connection BB)

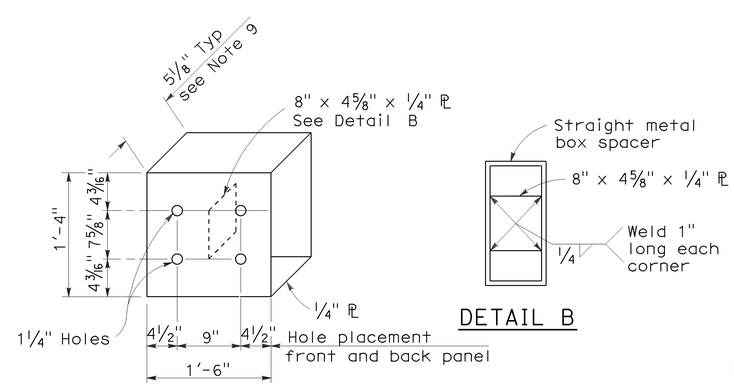

DETAIL A

DETAIL B

STRAIGHT METAL BOX SPACER

STATE OF CALIFORNIA
DEPARTMENT OF TRANSPORTATION

METAL BEAM GUARD RAILING CONNECTIONS TO BRIDGE RAILINGS WITHOUT SIDEWALKS DETAILS No.2

NO SCALE

RSP A77J2 DATED JUNE 6, 2008 SUPERSEDES STANDARD PLAN A77J2 DATED MAY 1, 2006 - PAGE 73 OF THE STANDARD PLANS BOOK DATED MAY 2006.

REVISED STANDARD PLAN RSP A77J2

2006 REVISED STANDARD PLAN RSP A77J2

12-10-07

Dist	COUNTY	ROUTE	POST MILES TOTAL PROJECT	SHEET No.	TOTAL SHEETS
12	Ora	5	17.1/17.8	54	81

Randell D. Hiatt
REGISTERED CIVIL ENGINEER

May 20, 2011
PLANS APPROVAL DATE

REGISTERED PROFESSIONAL ENGINEER Randell D. Hiatt No. C50200 Exp. 6-30-11 CIVIL STATE OF CALIFORNIA

The State of California or its officers or agents shall not be responsible for the accuracy or completeness of electronic copies of this plan sheet.

To accompany plans dated 5-23-11

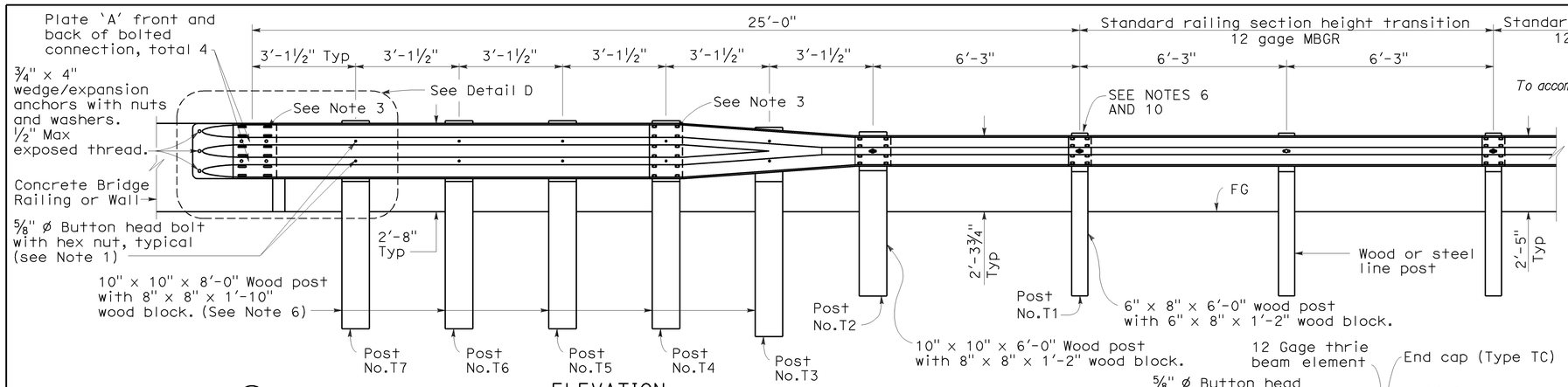

ELEVATION

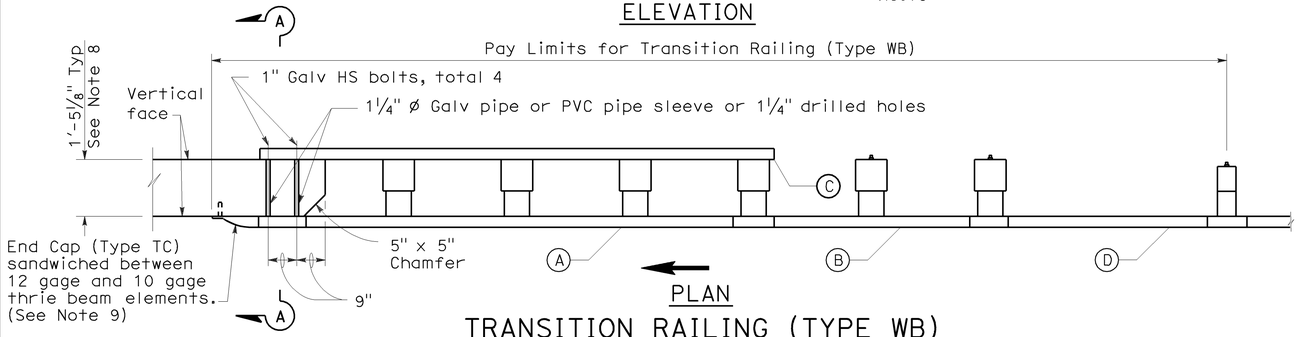

PLAN

TRANSITION RAILING (TYPE WB)

(No Blockout Attachment)

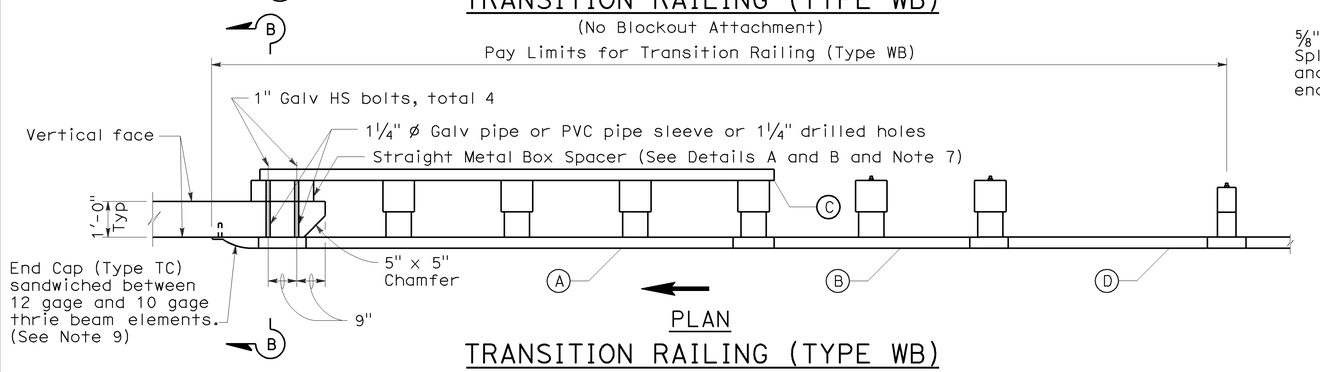

PLAN

TRANSITION RAILING (TYPE WB)

(Blockout Attachment)

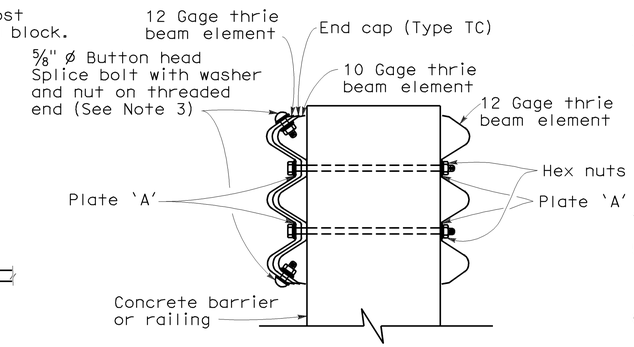

SECTION A-A

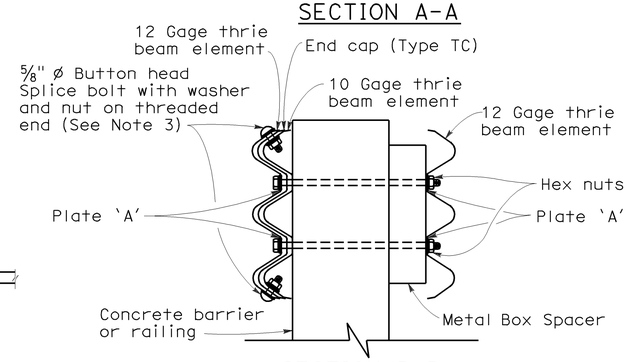

SECTION B-B

NOTES:

1. Use ⅝" ø Button head bolts and hex nuts for connections to posts. No washer on rail face for bolted connections to post.
2. The nested rail elements, end cap, and 'W' beam to thrie beam element may be spliced together prior to bolting the elements to the wood post and concrete barrier or railing.
3. Exterior splice bolt holes for rail element splices at Post No. T4 and the connection to the concrete barrier or railing shall be the standard 29/32" x 1⅛" slot size. Interior splice bolt holes at these locations may be increased up to 1¼" ø. Only the top 2 and the bottom 2 splice bolts with washers and nuts are required for rail splices at Post No. T4 and the connection to the concrete barrier or railing.
4. Direction of adjacent traffic indicated by ➡.
5. The top elevation of Posts No. T2 through No. T7 shall not project more than 1" above the top elevation of the rail element.
6. Typically, the railing connected to Transition Railing (Type WB) will be either standard railing section of metal beam guard railing with height transition ratio of 120:1 or an approved Caltrans end treatment attached to Post No. T1.
7. The depth of the metal box spacer varies from the 5⅛" to 1½" and is dependent on the width of the concrete railing or wall. The combined dimension for the depth of the metal box spacer plus the width of railing or wall is typically 17⅛". Where the space between the backside of the concrete railing or wall and the rear thrie beam element is less than 1½", metal plates similar to Plate 'A' are to be used as spacers.
8. Where the width of the concrete railing or wall is greater than 17⅛", wood blocks are to be used to fill the space created between the backside of Posts No. T4 through No. T7 and the rear thrie beam element. These wood blocks shall be 8" in width and 1'-2" in length. The dimension between the front thrie beam element and the rear thrie beam element is to match the width of the concrete railing or wall.
9. End cap may be installed over 12 gage and 10 gage thrie beam elements where transition railing is installed on the departure end of bridge railing.
10. Conform standard railing section height to 2'-3¾" at Post No. T1 using height transition ratio of 120:1.

LEGEND

- (A) Nested thrie beam elements (one 12 gage element nested over one 10 gage element).
- (B) One 10 gage "W" beam to thrie beam element.
- (C) One 12 gage thrie beam element.
- (D) One 10 gage "W" beam rail element (7'-3½" length)

10 gage = 0.135" thick

12 gage = 0.108" thick

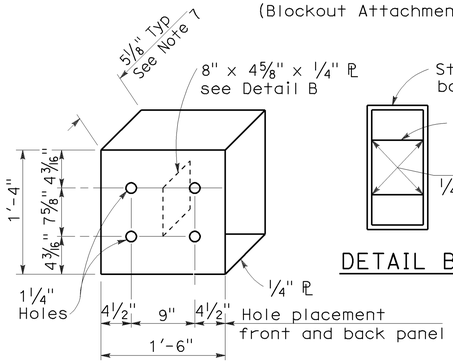

DETAIL A

STRAIGHT METAL BOX SPACER

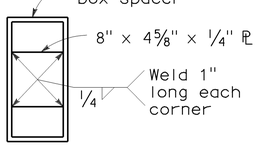

DETAIL B

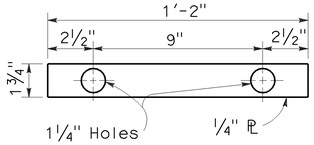

DETAIL C

PLATE 'A'

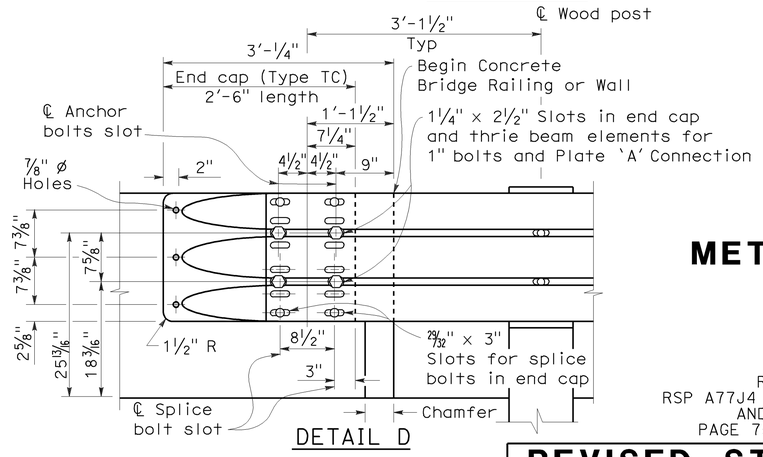

DETAIL D

STATE OF CALIFORNIA
DEPARTMENT OF TRANSPORTATION

METAL BEAM GUARD RAILING TRANSITION RAILING (TYPE WB)

NO SCALE

RSP A77J4 DATED MAY 20, 2011 SUPERSEDES
RSP A77J4 DATED JUNE 5, 2009, RSP A77J4 DATED JUNE 6, 2008
AND STANDARD PLAN A77J4 DATED MAY 1, 2006 -
PAGE 75 OF THE STANDARD PLANS BOOK DATED MAY 2006.

REVISED STANDARD PLAN RSP A77J4

2006 REVISED STANDARD PLAN RSP A77J4

5-14-09

DIST	COUNTY	ROUTE	POST MILES TOTAL PROJECT	SHEET NO.	TOTAL SHEETS
12	Ora	5	17.1/17.8	55	81

REGISTERED CIVIL ENGINEER

November 17, 2006
PLANS APPROVAL DATE

REGISTERED PROFESSIONAL ENGINEER Michael Janzen No. 44788 Exp. 03-31-08 CIVIL STATE OF CALIFORNIA

The State of California or its officers or agents shall not be responsible for the accuracy or completeness of electronic copies of this plan sheet.

To accompany plans dated 5-23-11

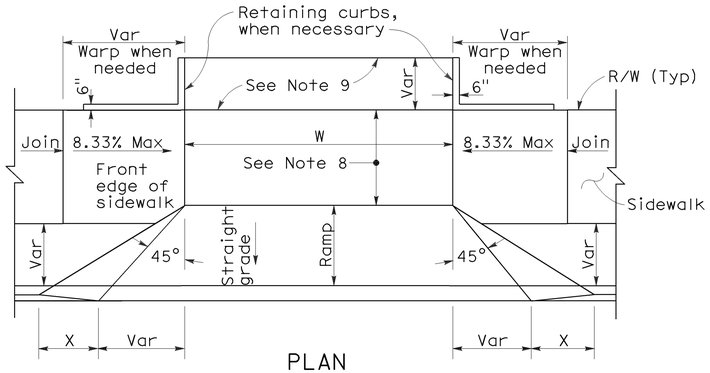

PLAN

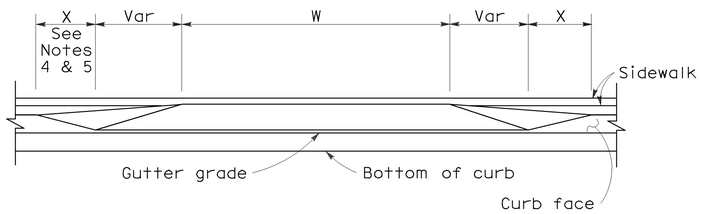

ELEVATION

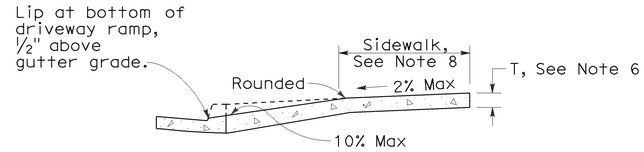

CASE A

Typical driveway, sidewalk not depressed

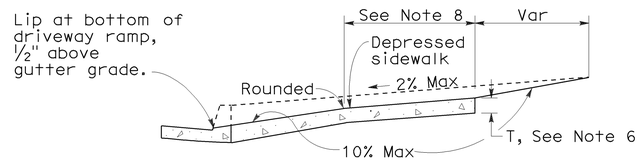

CASE B

Driveway with depressed sidewalk

SECTIONS

CURB QUANTITIES

TYPE	CUBIC YARDS PER LINEAR FOOT
A1-6	0.02585
A1-8	0.03084
A2-6	0.05903
A2-8	0.06379
A3-6	0.01036
A3-8	0.01435
B1-4	0.02185
B1-6	0.02930
B2-4	0.05515
B2-6	0.06171
B3-4	0.00641
B3-6	0.01074
B4	0.05709
D-4	0.04083
D-6	0.06804
E	0.06661

TABLE A

CURB TYPE	DIMENSIONS "H1"	"H2"	"W1"	"W2"
A1-6	1'-2"	6"	7½"	1½"
A1-8	1'-4"	8"	8"	2"
A2-6	1'-0"	6"	2'-7½"	1½"
A2-8	1'-2"	8"	2'-8"	2"
A3-6	6"	5"	7¼"	1¼"
A3-8	8"	7"	7¾"	1¾"
B1-4	1'-0"	4"	7½"	2½"
B1-6	1'-2"	6"	9"	4"
B2-4	10"	4"	2'-7½"	2½"
B2-6	1'-0"	6"	2'-9"	4"
B3-4	4"	3"	7"	2"
B3-6	6"	5"	8½"	3½"
D-4	10"	4"	1'-6"	1'-1"
D-6	1'-0"	6"	2'-2"	1'-8"

DRIVEWAYS

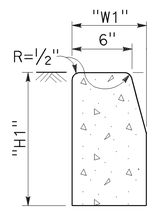

TYPE A1 CURBS

See Table A

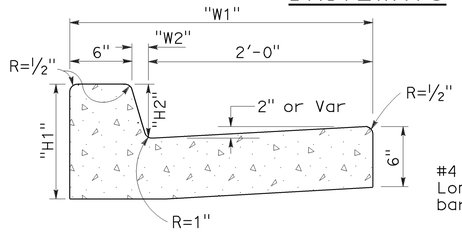

TYPE A2 CURBS

See Table A

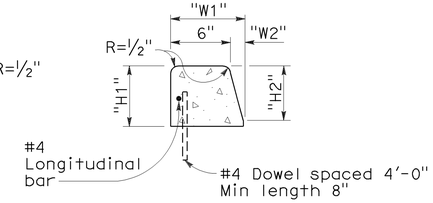

TYPE A3 CURBS

Superimposed on existing pavement
See Table A

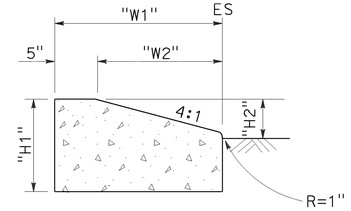

TYPE D CURBS

See Table A

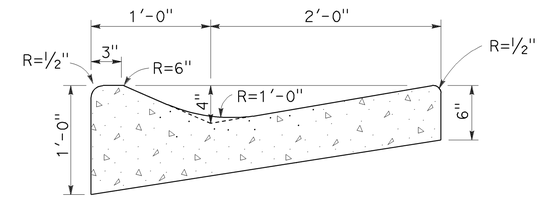

TYPE E CURB

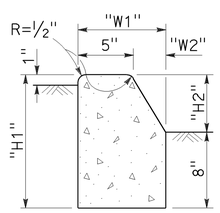

TYPE B1 CURBS

See Table A

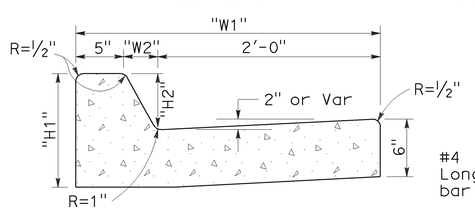

TYPE B2 CURBS

See Table A

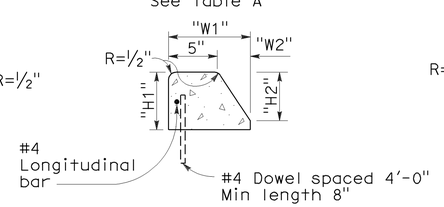

TYPE B3 CURBS

Superimposed on existing pavement
See Table A

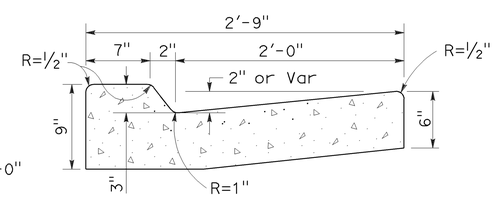

TYPE B4 CURBS

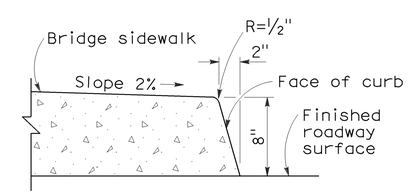

TYPE H CURB

On Bridges

CURBS

NOTES:

1. Case A driveway section typically applies.
2. Use Case B driveway section when ramp slopes would exceed 10% in Case A.
3. Use Case B driveway section when sidewalk cross slope would exceed 2% in Case A.
4. X=3'-0" except for curb heights over 10" where 4:1 slopes shall be used on curb slope.
5. X is a variable when sidewalk is located where wheelchairs may traverse the surface. Slopes shall not exceed 8.33%.
6. Sidewalk and ramp thickness "T" at driveway shall be 4" for residental and 6" for commercial.
7. Difference in slope of the driveway ramp and the slope of a line between the gutter and a point on the roadway 5'-0" from gutter line shall not exceed 15%. Reduce driveway ramp slope, not gutter slope, where required.
8. Minimum width of clear passageway for sidewalk shall be 4'-0".
9. Retaining curbs and acquisition of construction easement may be necessary for narrow sidewalks or curb heights in excess of 6".
10. Across the pedestrian route at curb ramp locations, the gutter pan slope shall not exceed 1" of depth for each 2'-0" of width.

STATE OF CALIFORNIA
DEPARTMENT OF TRANSPORTATION

CURBS AND DRIVEWAYS

NO SCALE

RSP A87A DATED NOVEMBER 17, 2006 SUPERSEDES STANDARD PLAN A87A DATED MAY 1, 2006 - PAGE 113 OF THE STANDARD PLANS BOOK DATED MAY 2006.

REVISED STANDARD PLAN RSP A87A

2006 REVISED STANDARD PLAN RSP A87A

10-25-06

DIST	COUNTY	ROUTE	POST MILES TOTAL PROJECT	SHEET NO.	TOTAL SHEETS
12	Ora	5	17.1/17.8	56	81

REGISTERED CIVIL ENGINEER

September 1, 2006
PLANS APPROVAL DATE

REGISTERED PROFESSIONAL ENGINEER Hector David Cordova No. C41957 Exp. 3-31-08 CIVIL STATE OF CALIFORNIA

The State of California or its officers or agents shall not be responsible for the accuracy or completeness of electronic copies of this plan sheet.

To accompany plans dated 5-23-11

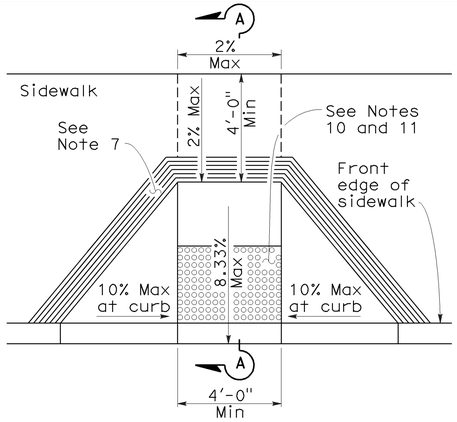

CASE A

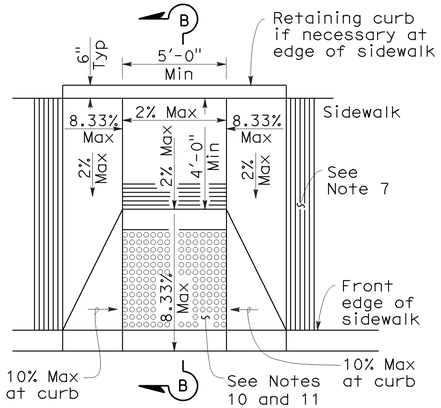

CASE B

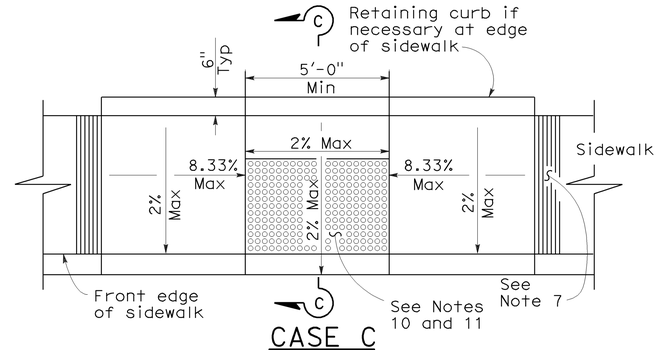

CASE C

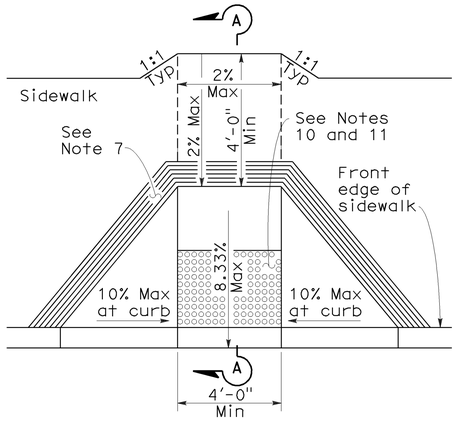

CASE D

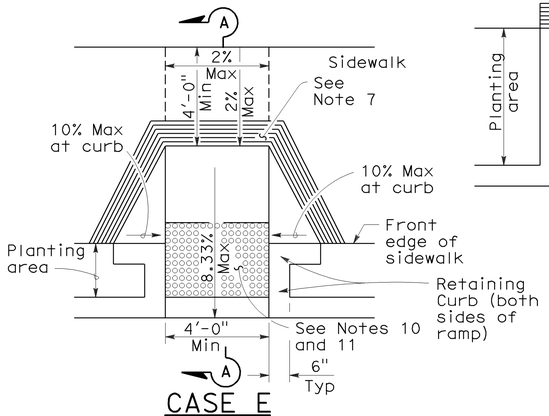

CASE E

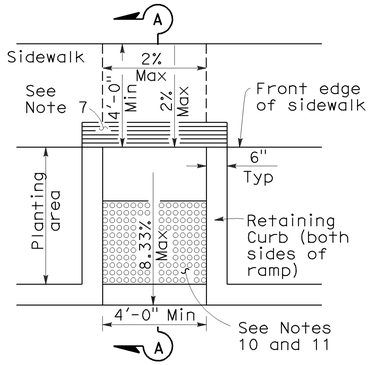

CASE F

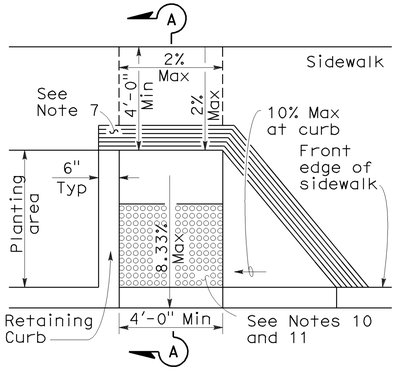

CASE G
See Note 4

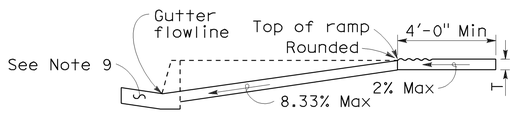

SECTION A-A

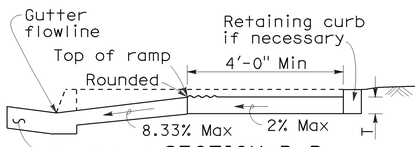

SECTION B-B
Depress entire sidewalk as required

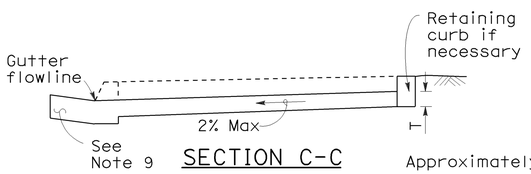

SECTION C-C

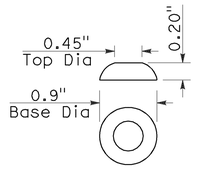

RAISED TRUNCATED DOME

NOTES:

1. As site conditions dictate, Case A through Case G curb ramps may be used for corner installations similar to those shown in Detail A and Detail B. The case of curb ramps used in Detail A do not have to be the same. Case A through Case G curb ramps also may be used at mid block locations, as site conditions dictate.
2. If distance from curb to back of sidewalk is too short to accommodate ramp and 4'-0" platform (landing) as shown in Case A, the sidewalk may be depressed longitudinally as in Case B, or C or may be widened as in Case D.
3. When ramp is located in center of curb return, crosswalk configuration must be similar to that shown for Detail B.
4. As site conditions dictate, the retaining curb side and the flared side of the Case G ramp shall be constructed in reversed position.
5. If located on a curve, the sides of the ramp need not be parallel, but the minimum width of the ramp shall be 4'-0".
6. Side slope of ramp flares vary uniformly from a maximum of 10% at curb to conform with longitudinal sidewalk slope adjacent to top of the ramp, except in Case C and Case F.
7. The curb ramp shall be outlined, as shown, with a 1'-0" wide border with 1/4" grooves approximately 3/4" on center. See grooving detail.
8. Transitions from ramps and landing to walks, gutters or streets shall be flush and free of abrupt changes.
9. Maximum slopes of adjoining gutters, the road surface immediately adjacent to the curb ramp or accessible route shall not exceed 5 percent within 4'-0" of the top and bottom of the curb ramp.
10. Curb ramps shall have a detectable warning surface that extends the full width and 3'-0" depth of the ramp. Detectable Warning Surfaces shall conform to the details on this plan and the requirements in the Special Provisions.
11. The edge of the detectable warning surface nearest the street shall be between 6" and 8" from the gutter flowline.
12. Sidewalk and ramp thickness, "T", shall be 3½" minimum.
13. Utility pull boxes, manholes, vaults and all other utility facilities within the boundaries of the curb ramp will be relocated or adjusted to grade by the owner prior to, or in conjunction with, curb ramp construction.
14. For retrofit conditions, removal and replacement of curb apron will be at the Contractor's option, unless otherwise shown on project plans.

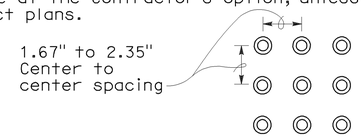

RAISED TRUNCATED DOME PATTERN (IN-LINE)

DETECTABLE WARNING SURFACE

See Note 10

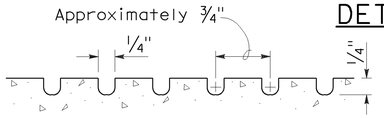

GROOVING DETAIL

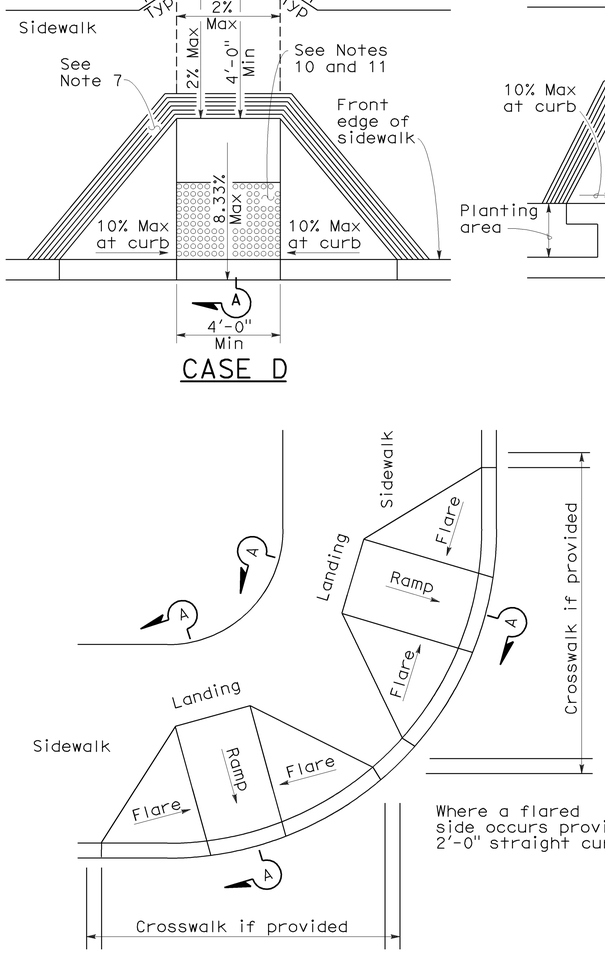

DETAIL A

TYPICAL TWO-RAMP CORNER INSTALLATION

See Note 1

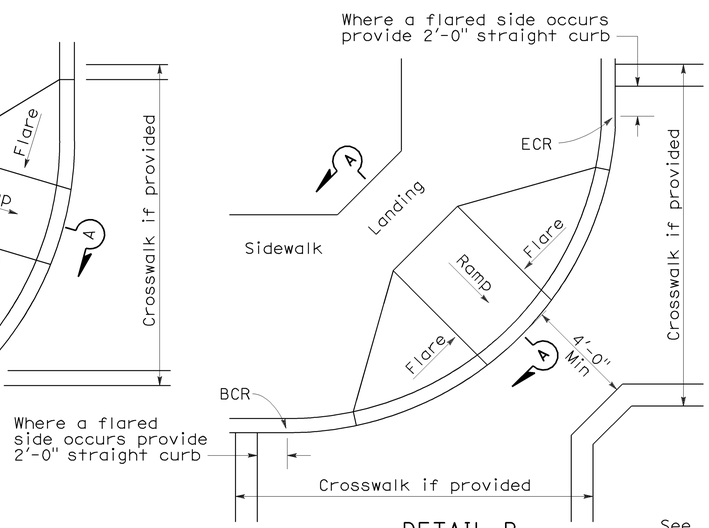

DETAIL B

TYPICAL ONE-RAMP CORNER INSTALLATION

See Notes 1 and 3

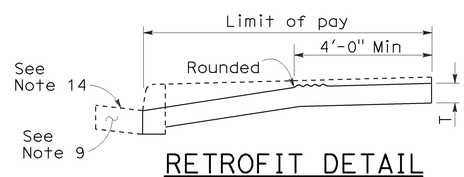

RETROFIT DETAIL
Existing curb and sidewalk

STATE OF CALIFORNIA
DEPARTMENT OF TRANSPORTATION

CURB RAMP DETAILS

NO SCALE

RSP A88A DATED SEPTEMBER 1, 2006 SUPERSEDES STANDARD PLAN A88A DATED MAY 1, 2006 - PAGE 115 OF THE STANDARD PLANS BOOK DATED MAY 2006.

REVISED STANDARD PLAN RSP A88A

2006 REVISED STANDARD PLAN RSP A88A

8-3-06

DIST	COUNTY	ROUTE	POST MILES TOTAL PROJECT	SHEET NO.	TOTAL SHEETS
12	Ora	5	17.1/17.8	57	81

William K. Farnbach
REGISTERED CIVIL ENGINEER

May 15, 2009
PLANS APPROVAL DATE

REGISTERED PROFESSIONAL ENGINEER William K. Farnbach No. C49042 Exp. 9-30-10 CIVIL STATE OF CALIFORNIA

The State of California or its officers or agents shall not be responsible for the accuracy or completeness of electronic copies of this plan sheet.

To accompany plans dated 5-23-11

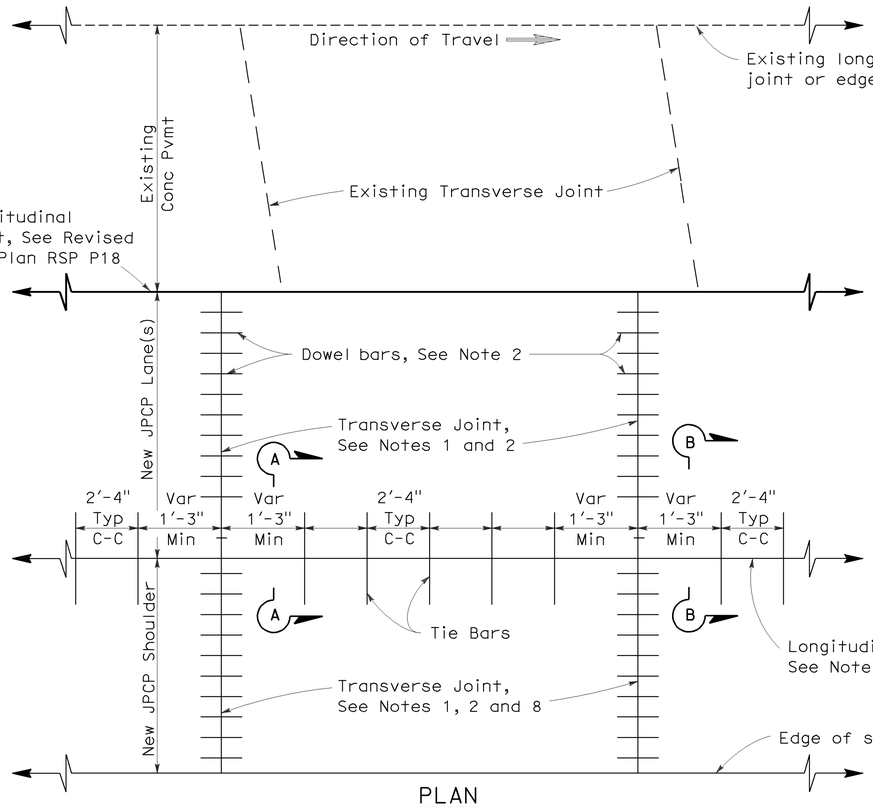

PLAN

LANE/SHOULDER ADDITION OR RECONSTRUCTION

See Notes 6 and 7

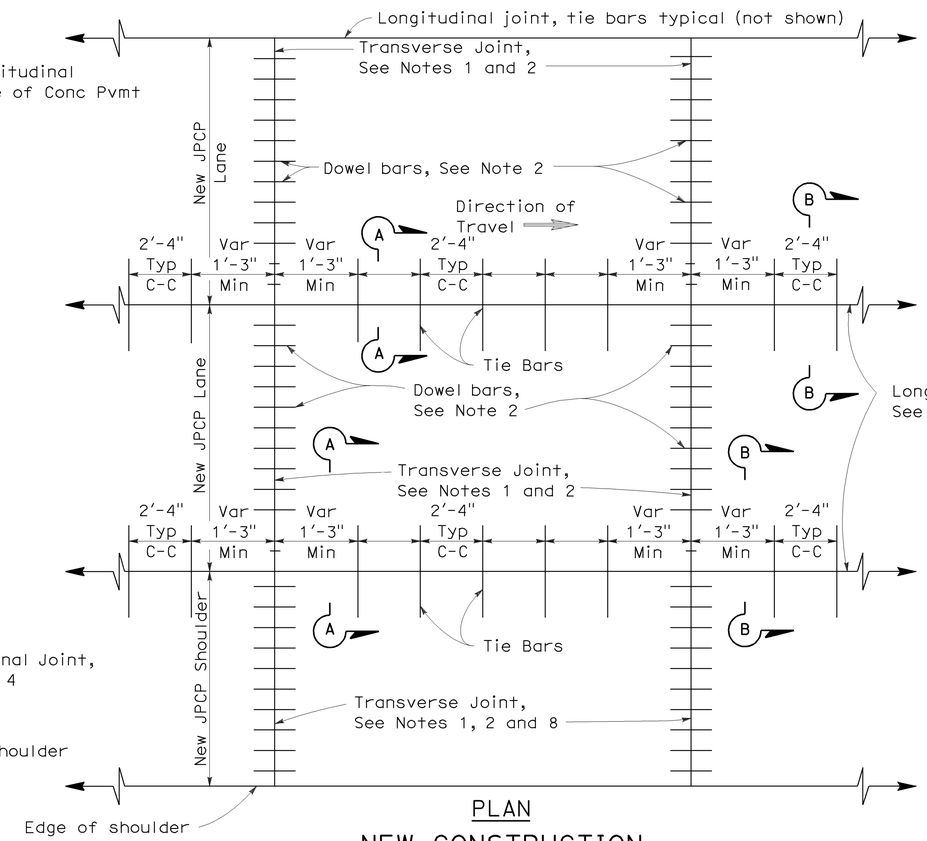

PLAN

NEW CONSTRUCTION

See Notes 6 and 7

NOTES:

1. Transverse joints shall be constructed at right angles to the longitudinal pavement joints in new jointed plain concrete pavement and spaced at successive repeated intervals of 12', 15', 13' and 14'.
2. For transverse joint and dowel bar details not shown, See Revised Standard Plan RSP P10.
3. Construct longitudinal contraction joints as shown in Section A-A when more than one lane or shoulder widths are placed at one time. If constructing one lane at a time, use longitudinal construction joint, as shown in Section B-B.
4. For additional longitudinal joint details, see Revised Standard Plan RSP P18.
5. If fresh concrete is placed adjacent to existing concrete, the top corner of the new hardened concrete does not need to be rounded to the 1/4" radius as shown.
6. Joint spacing patterns do not apply to intersections.
7. Details can also apply to inside widening.
8. Dowel bars may be omitted from shoulders when the shoulder cross slope is not the same as the adjacent traffic lane.

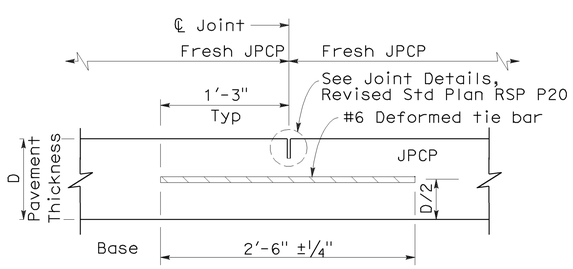

SECTION A-A

LONGITUDINAL CONTRACTION JOINT

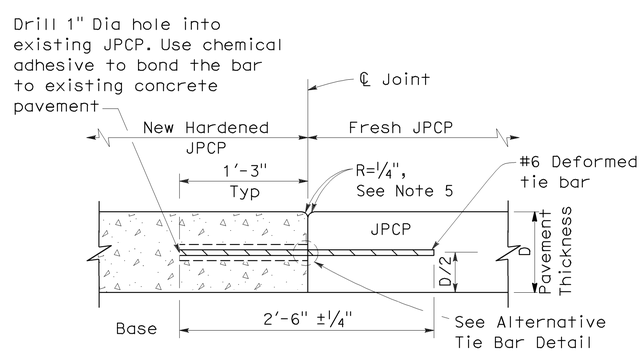

SECTION B-B

LONGITUDINAL CONSTRUCTION JOINT

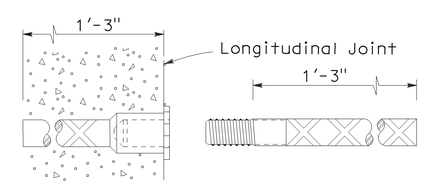

ALTERNATIVE TIE BAR SPLICE DETAIL

(Splice Coupler)

TIE BAR DETAILS

STATE OF CALIFORNIA
DEPARTMENT OF TRANSPORTATION

JOINTED PLAIN CONCRETE PAVEMENT

NO SCALE

RSP P1 DATED MAY 15, 2009 SUPERSEDES STANDARD PLAN P1
DATED MAY 1, 2006 - PAGE 119 OF THE STANDARD PLANS BOOK DATED MAY 2006.

REVISED STANDARD PLAN RSP P1

2006 REVISED STANDARD PLAN RSP P1

5-8-09

DIST	COUNTY	ROUTE	POST MILES TOTAL PROJECT	SHEET NO.	TOTAL SHEETS
12	Ora	5	17.1/17.8	58	81

REGISTERED CIVIL ENGINEER

May 15, 2009
PLANS APPROVAL DATE

REGISTERED PROFESSIONAL ENGINEER William K. Farnbach No. C49042 Exp. 9-30-10 CIVIL STATE OF CALIFORNIA

The State of California or its officers or agents shall not be responsible for the accuracy or completeness of electronic copies of this plan sheet.

To accompany plans dated 5-23-11

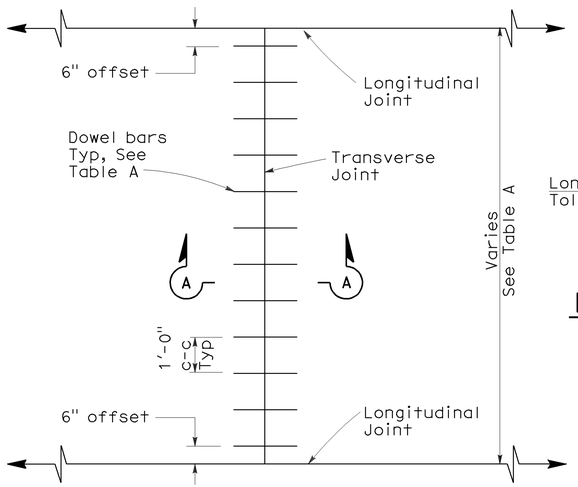

TRANSVERSE JOINT DOWEL BAR LAYOUT

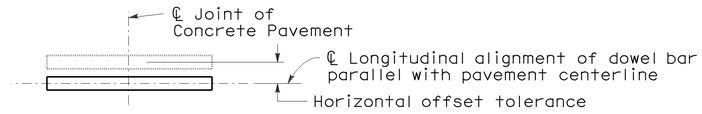

PLAN

HORIZONTAL OFFSET TOLERANCE

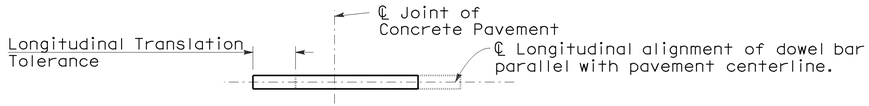

PLAN

LONGITUDINAL TRANSLATION TOLERANCE

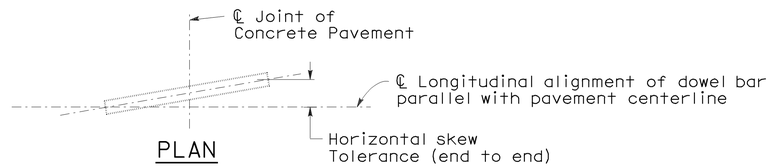

PLAN

HORIZONTAL SKEW TOLERANCE

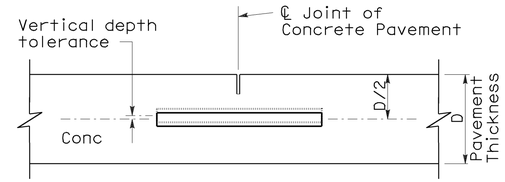

ELEVATION

VERTICAL DEPTH TOLERANCE

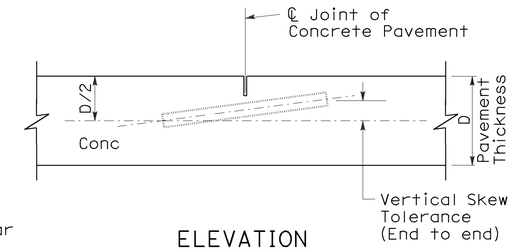

ELEVATION

VERTICAL SKEW TOLERANCE

NOTES:

1. See Revised Standard Plan RSP P1 for typical dowel bar placement and locations.
2. 1½" Dia smooth dowel bars are to be used with a pavement thickness, D, equal to or greater than 0.70 feet. For pavement thickness, D, less than 0.70 feet, use 1¼" Dia smooth dowel bars.
3. For widths not shown, see Project Plans.
4. If fresh concrete pavement is placed adjacent to existing concrete pavement, the top corner of the existing concrete pavement does not need to be rounded to the ¼" radius, as shown.

TABLE A (See Note 3)

Dowel Bar Transverse Spacing Table	
Width between Longitudinal Joints	Number of Dowels between Longitudinal Joints
14'-0"	14
13'-0"	13
12'-0"	12
11'-0"	11
10'-0"	10
8'-0"	8
5'-0"	5
4'-0"	4

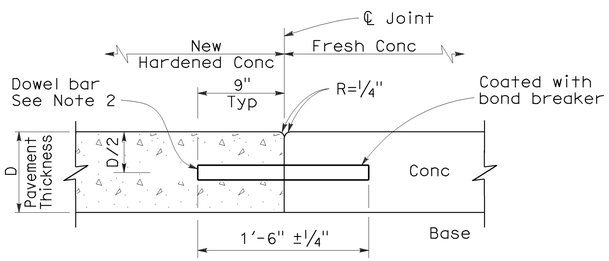

SECTION A-A

TRANSVERSE CONSTRUCTION JOINT DETAIL

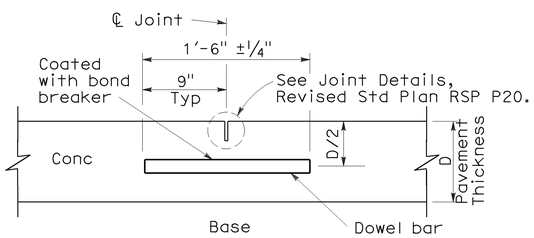

TRANSVERSE CONTRACTION JOINT

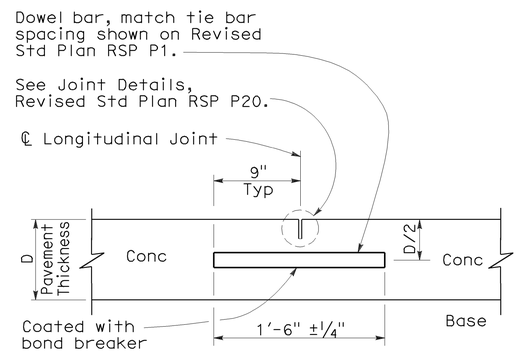

LONGITUDINAL CONTRACTION JOINT WITH DOWEL BARS

(See Revised Std Plan RSP P18)

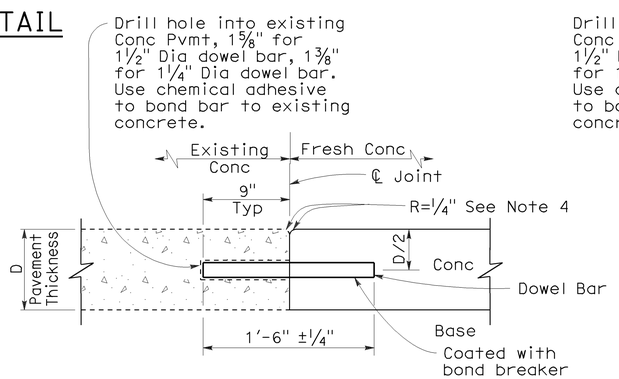

TRANSVERSE CONSTRUCTION JOINT FOR EXISTING CONCRETE PAVEMENT

(Drill and bond locations)

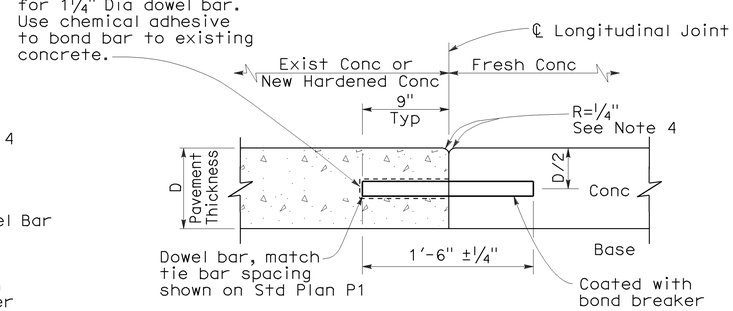

LONGITUDINAL CONSTRUCTION JOINT WITH DOWEL BARS

(See Revised Std Plan RSP P18)

STATE OF CALIFORNIA
DEPARTMENT OF TRANSPORTATION

CONCRETE PAVEMENT-DOWEL BAR DETAILS

NO SCALE

RSP P10 DATED MAY 15, 2009 SUPERSEDES STANDARD PLAN P10 DATED MAY 1, 2006 - PAGE 124 OF THE STANDARD PLANS BOOK DATED MAY 2006.

REVISED STANDARD PLAN RSP P10

2006 REVISED STANDARD PLAN RSP P10

5-8-09

DIST	COUNTY	ROUTE	POST MILES TOTAL PROJECT	SHEET NO.	TOTAL SHEETS
12	Ora	5	17.1/17.8	59	81

William K. Farnbach
REGISTERED CIVIL ENGINEER

May 15, 2009
PLANS APPROVAL DATE

REGISTERED PROFESSIONAL ENGINEER William K. Farnbach No. C49042 Exp. 9-30-10 CIVIL STATE OF CALIFORNIA

The State of California or its officers or agents shall not be responsible for the accuracy or completeness of electronic copies of this plan sheet.

To accompany plans dated 5-23-11

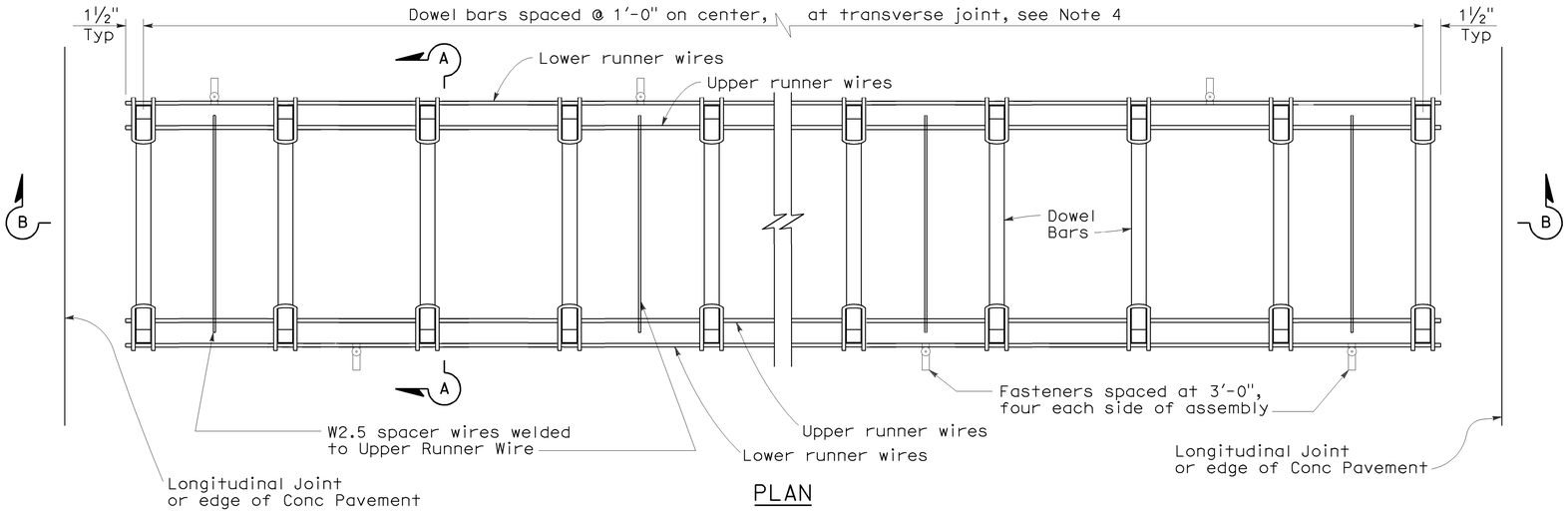

PLAN

DOWEL BAR BASKET (TRANSVERSE JOINT)

See Note 1

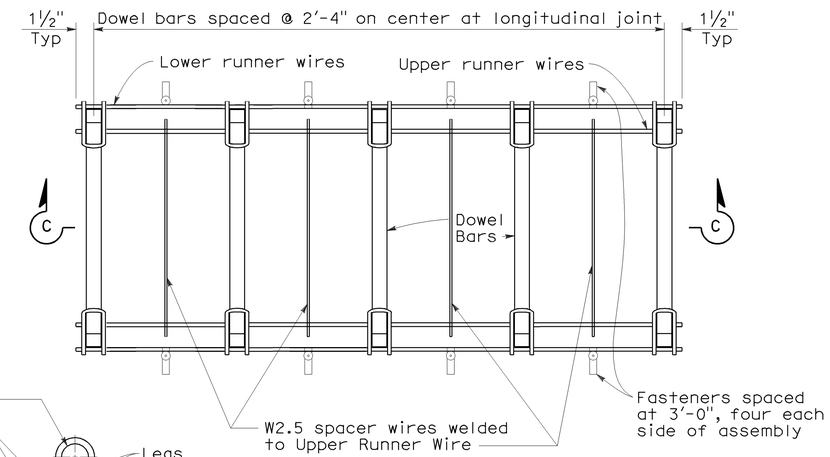

PLAN

DOWEL BAR BASKET (LONGITUDINAL JOINT)

See Note 1

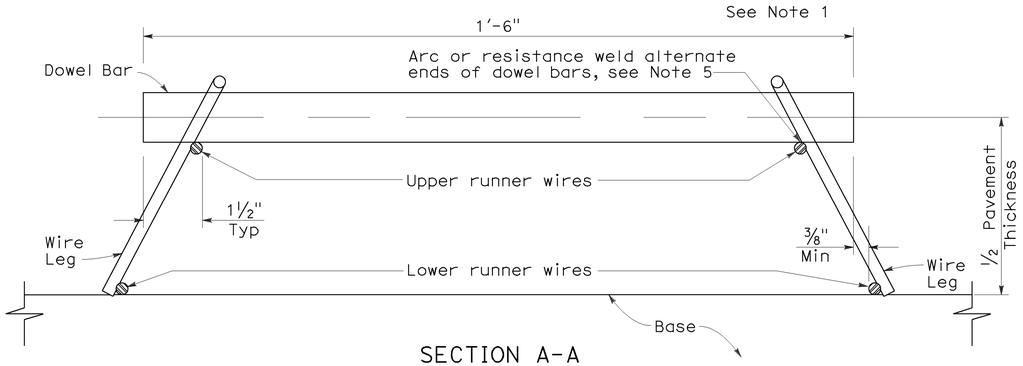

SECTION A-A

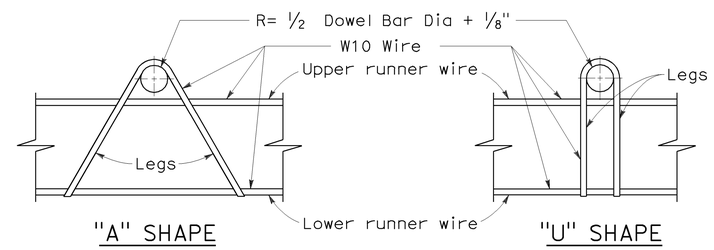

ASSEMBLY FRAME DETAILS

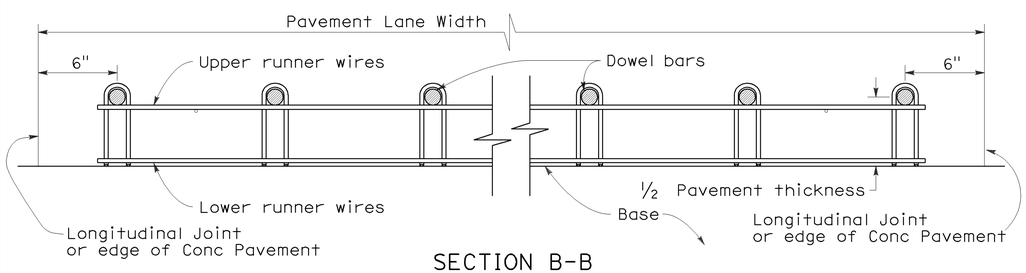

SECTION B-B

See Note 1

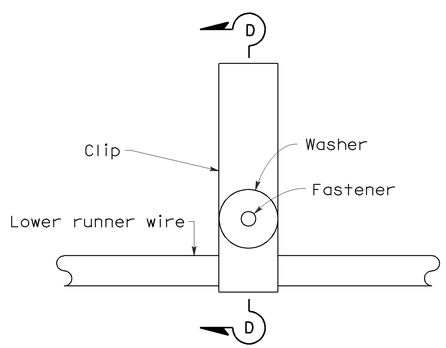

PLAN

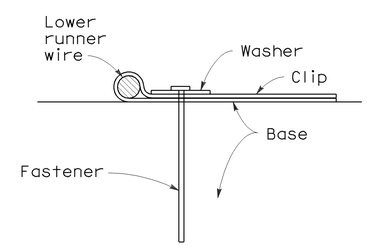

SECTION D-D

FASTENER DETAIL

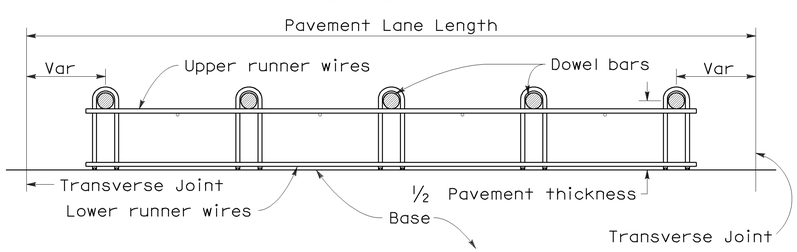

SECTION C-C

See Notes 1 and 4

NOTES:

1. "U" frame shape assembly shown. "U" frame shape or "A" frame shape are acceptable.
2. Wire sizes shown are minimum required.
3. All wire intersections are to be resistance welded.
4. Use tie bar spacing for longitudinal dowel bar locations. See Revised Std Plans RSPs P1, P2, and P3 for tie bar requirements.
5. Weld may be at top or bottom of dowel bar.

STATE OF CALIFORNIA
DEPARTMENT OF TRANSPORTATION

CONCRETE PAVEMENT-DOWEL BAR BASKET DETAILS

NO SCALE

RSP P12 DATED MAY 15, 2009 SUPERSEDES RSP P12 DATED NOVEMBER 17, 2006 AND STANDARD PLAN P12 DATED MAY 1, 2006 - PAGE 125 OF THE STANDARD PLANS BOOK DATED MAY 2006.

REVISED STANDARD PLAN RSP P12

2006 REVISED STANDARD PLAN RSP P12

5-8-09

DIST	COUNTY	ROUTE	POST MILES TOTAL PROJECT	SHEET NO.	TOTAL SHEETS
12	Ora	5	17.1/17.8	60	81

William K. Farnbach
REGISTERED CIVIL ENGINEER

May 15, 2009
PLANS APPROVAL DATE

REGISTERED PROFESSIONAL ENGINEER
William K. Farnbach
No. C49042
Exp. 9-30-10
CIVIL
STATE OF CALIFORNIA

The State of California or its officers or agents shall not be responsible for the accuracy or completeness of electronic copies of this plan sheet.

To accompany plans dated 5-23-11

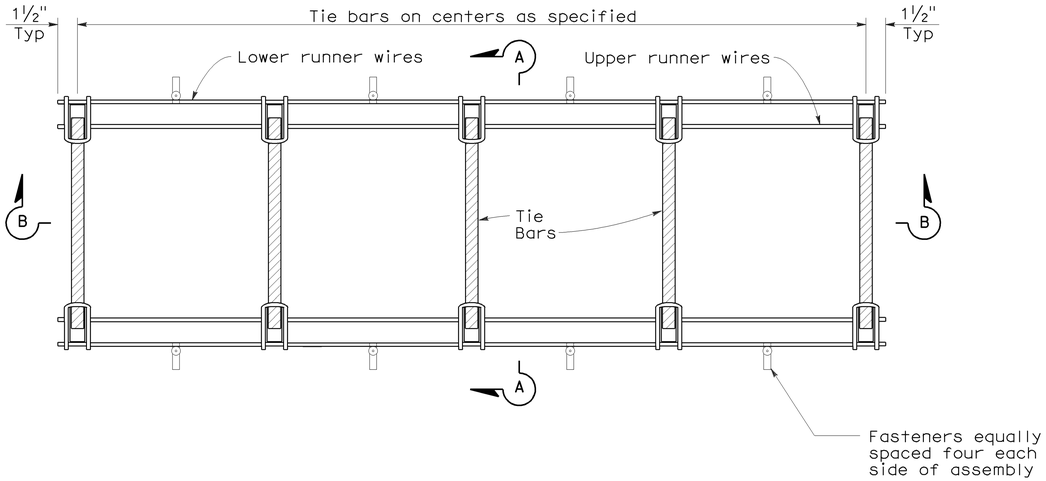

PLAN

TIE BAR BASKET

(TIE BARS AT LONGITUDINAL JOINT)
See Note 1

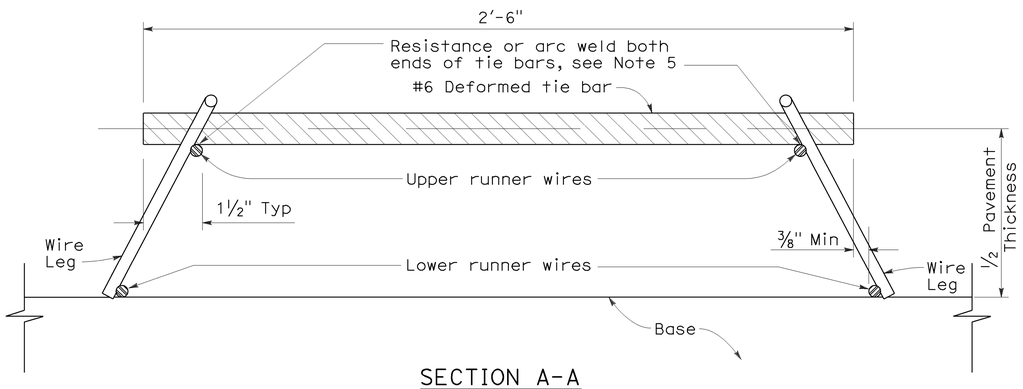

SECTION A-A

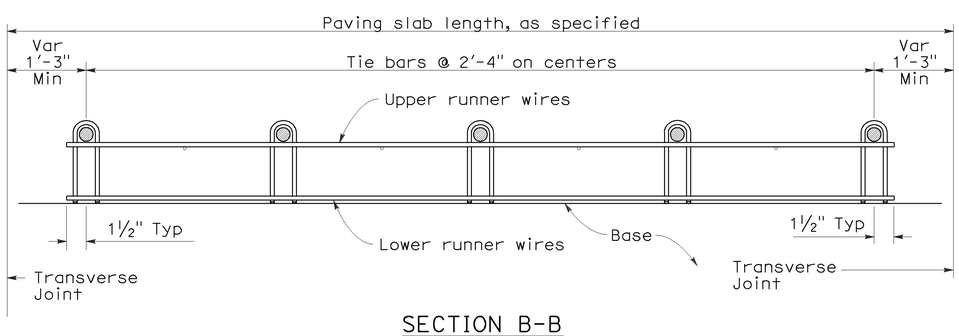

SECTION B-B
See Note 1

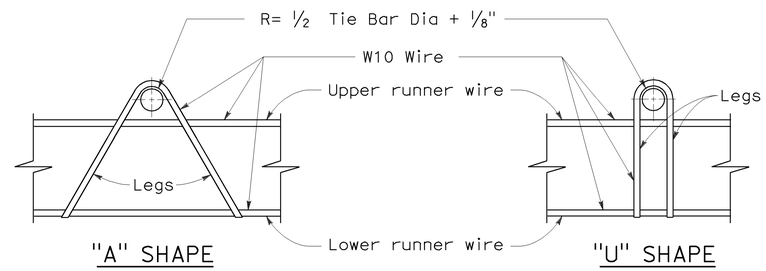

ASSEMBLY FRAME DETAILS

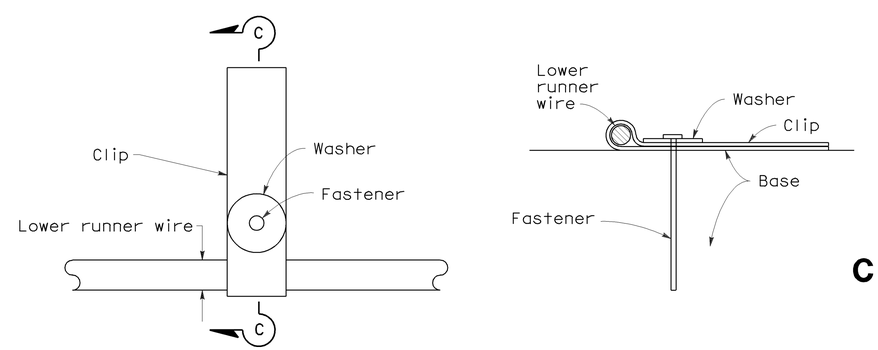

PLAN

SECTION C-C

FASTENER DETAIL

NOTES:

1. "U" frame shape assembly shown. "U" frame shape or "A" frame shape are acceptable.
2. Wire sizes shown are minimum required.
3. All wire intersections are to be resistance welded.
4. Not for use on nondoweled skewed jointed plain concrete pavement.
5. Weld may be at top or bottom of tie bar.

STATE OF CALIFORNIA
DEPARTMENT OF TRANSPORTATION

CONCRETE PAVEMENT-TIE BAR BASKET DETAILS

NO SCALE

RSP P17 DATED MAY 15, 2009 SUPERSEDES RSP P17 DATED NOVEMBER 17, 2006 AND STANDARD PLAN P17 DATED MAY 1, 2006 - PAGE 126 OF THE STANDARD PLANS BOOK DATED MAY 2006.

REVISED STANDARD PLAN RSP P17

2006 REVISED STANDARD PLAN RSP P17

5-8-09

DIST	COUNTY	ROUTE	POST MILES TOTAL PROJECT	SHEET NO.	TOTAL SHEETS
12	Ora	5	17.1/17.8	61	81

William K. Farnbach
REGISTERED CIVIL ENGINEER

June 5, 2009
PLANS APPROVAL DATE

REGISTERED PROFESSIONAL ENGINEER William K. Farnbach No. C49042 Exp. 9-30-10 CIVIL STATE OF CALIFORNIA

The State of California or its officers or agents shall not be responsible for the accuracy or completeness of electronic copies of this plan sheet.

To accompany plans dated 5-23-11

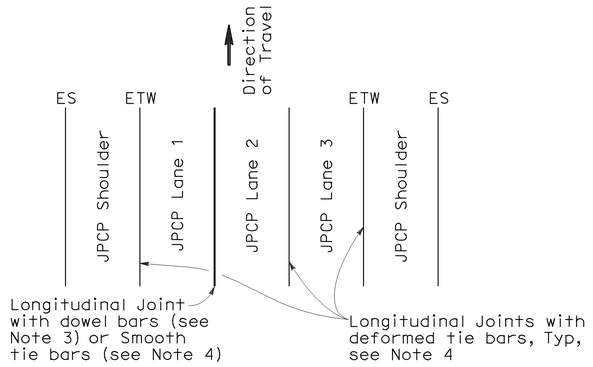

3 LANES WITH TIED CONCRETE SHOULDERS
PLAN

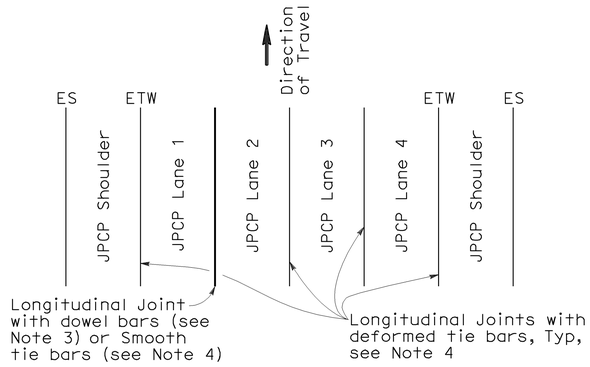

4 LANES WITH TIED CONCRETE SHOULDERS
PLAN

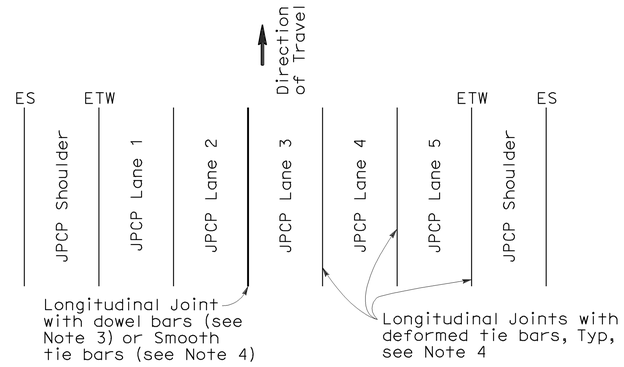

5 LANES WITH TIED CONCRETE SHOULDERS
PLAN

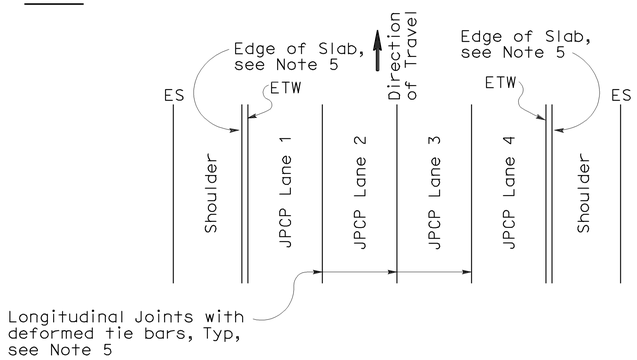

4 LANES OR LESS WITH WIDENED SLAB
PLAN

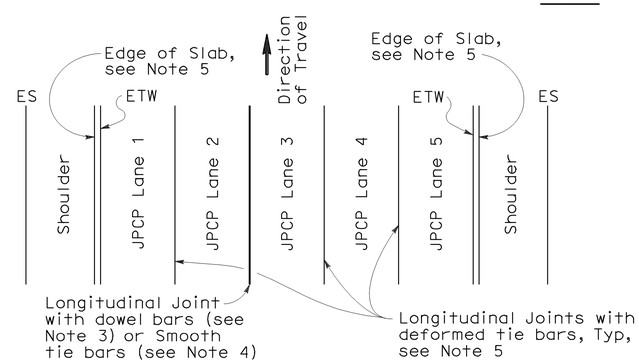

5 LANES WITH WIDENED SLAB
PLAN

NEW CONSTRUCTION

Location of Longitudinal Joints
(For JPCP)

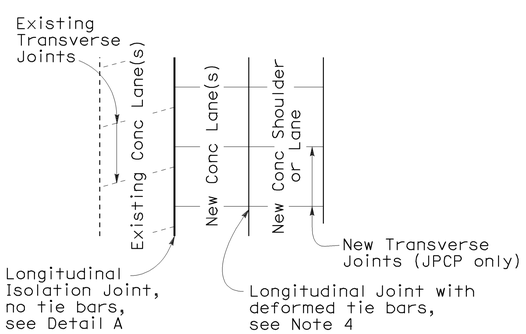

CASE 1
PLAN

Transverse Joints do not align between new and existing

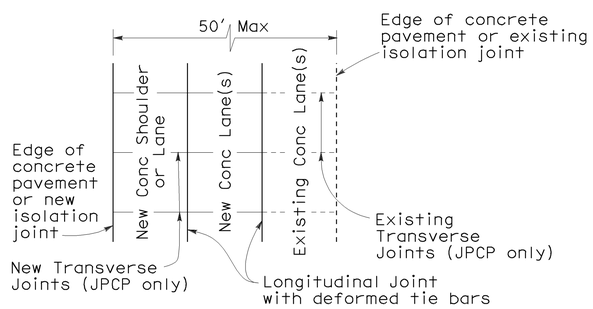

CASE 2
PLAN

Transverse Joints align between new and existing

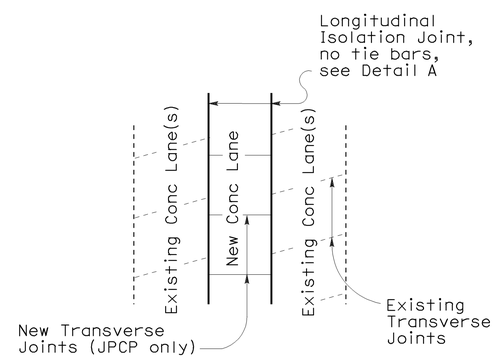

CASE 3 (INTERIOR LANE REPLACEMENT)
PLAN

Transverse Joints do not align between new and existing

LANE/SHOULDER ADDITION OR RECONSTRUCTION

(For JPCP and CRCP)

NOTES:

1. Where Lean Concrete Base is not used as base material, the joint filler material used for the longitudinal isolation joint shall only extend to the bottom of the new concrete slab. See Detail A.
2. Use 5/8" ±1/16" dimension for silicone sealant.
3. See Revised Standard Plan RSP P10 for longitudinal joint with dowel bars.
4. See Revised Standard Plan RSP P1.
5. See Revised Standard Plan RSP P2.

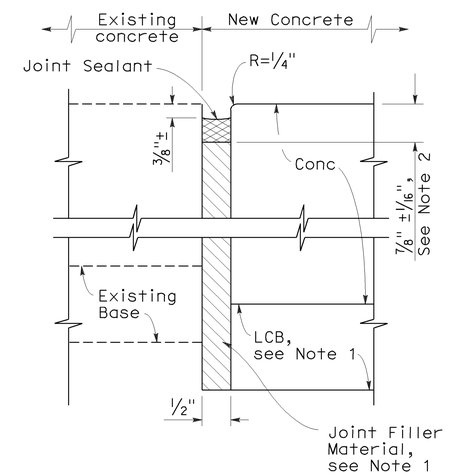

DETAIL A

ISOLATION JOINT

STATE OF CALIFORNIA
DEPARTMENT OF TRANSPORTATION

CONCRETE PAVEMENT-LANE SCHEMATICS AND ISOLATION JOINT DETAIL

NO SCALE

RSP P18 DATED JUNE 5, 2009 SUPERSEDES RSP P18 DATED MAY 15, 2009, RSP P18 DATED NOVEMBER 17, 2006 AND STANDARD PLAN P18 DATED MAY 1, 2006 - PAGE 127 OF THE STANDARD PLANS BOOK DATED MAY 2006.

REVISED STANDARD PLAN RSP P18

2006 REVISED STANDARD PLAN RSP P18

5-14-09

DIST	COUNTY	ROUTE	POST MILES TOTAL PROJECT	SHEET NO.	TOTAL SHEETS
12	Ora	5	17.1/17.8	62	81

William K. Farnbach
REGISTERED CIVIL ENGINEER

May 15, 2009
PLANS APPROVAL DATE

REGISTERED PROFESSIONAL ENGINEER William K. Farnbach No. C49042 Exp. 9-30-10 CIVIL STATE OF CALIFORNIA

The State of California or its officers or agents shall not be responsible for the accuracy or completeness of electronic copies of this plan sheet.

To accompany plans dated 5-23-11

NOTE:

1. Tie bars, dowel bars, and reinforcement are not shown in joint seal details, see Revised Standard Plans RSP P1, RSP P3, RSP P10, RSP P35, RSP P45, or RSP P46 as applicable.

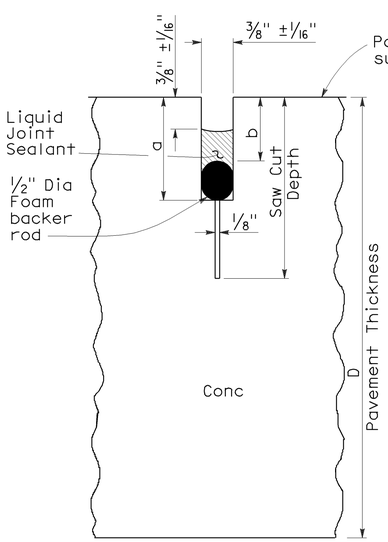

LIQUID SEALANT

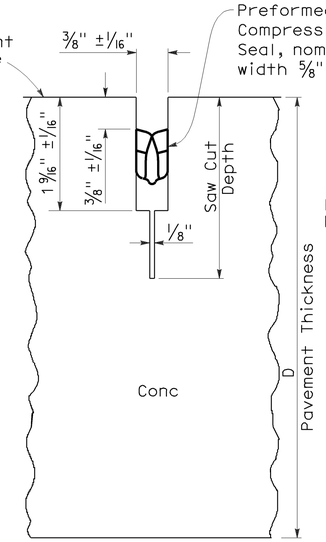

COMPRESSION SEAL

TYPE A1

Transverse Contraction Joints

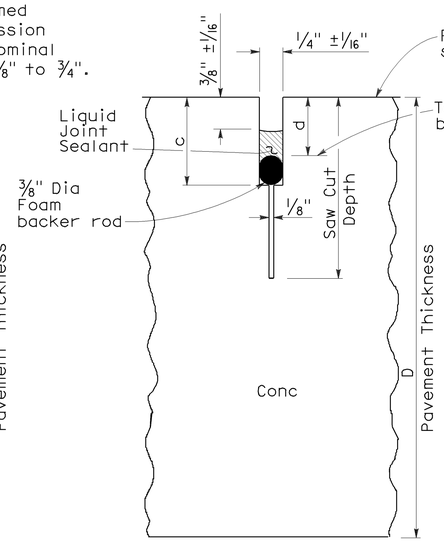

LIQUID SEALANT

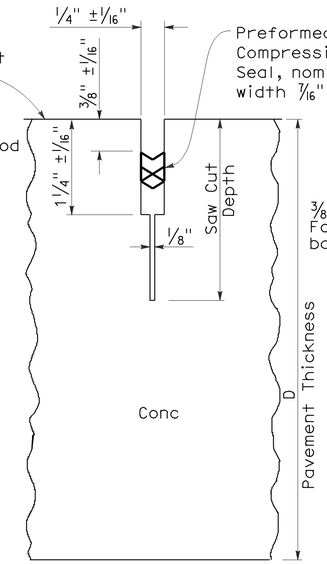

COMPRESSION SEAL

TYPE A2

Longitudinal Contraction Joints

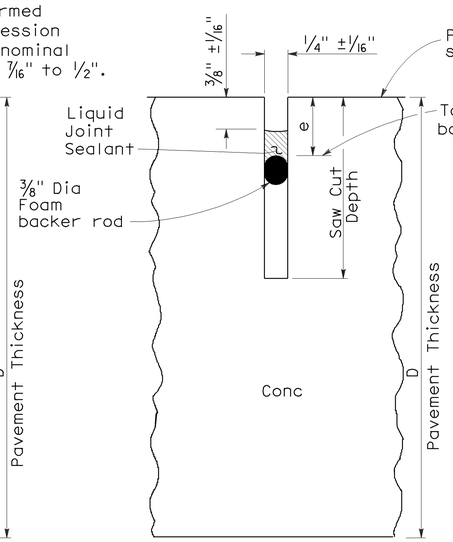

LIQUID SEALANT

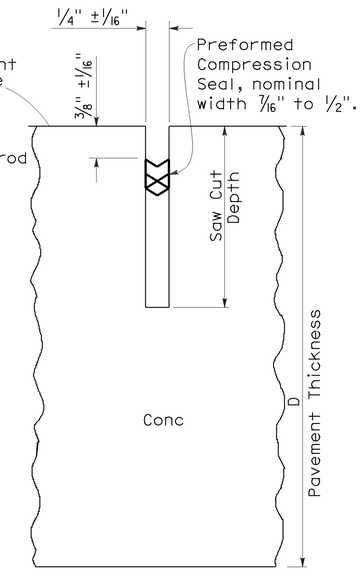

COMPRESSION SEAL

TYPE B

Longitudinal or Transverse Contraction Joint

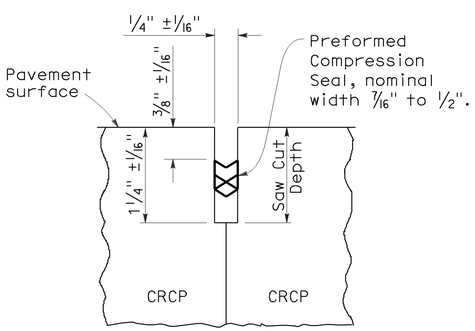

COMPRESSION SEAL

TYPE C

Transverse and Longitudinal Construction Joints (For CRCP)

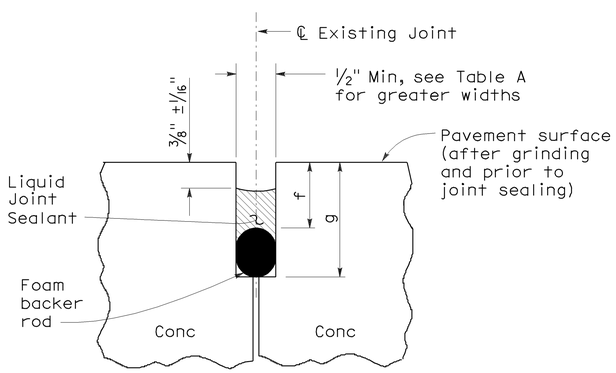

LIQUID SEALANT

TYPE R

Retrofit Transverse and Longitudinal Joints

LIQUID SEALANT RESERVOIR DEPTH

LIQUID SEALANT MATERIAL	3/8" Joint Width Type A1		1/4" Joint Width Type A2		1/4" Joint Width Type B
	DIMENSION		DIMENSION		DIMENSION
	a	b	c	d	e
SILCONE	1" ±1/16"	5/8" ±1/16"	15/16" ±1/16"	9/16" ±1/16"	9/16" ±1/16"
ASPHALT RUBBER	1 3/16" ±1/16"	3/4" ±1/16"	1 1/16" ±1/16"	11/16" ±1/16"	11/16" ±1/16"

TABLE A (TYPE R JOINT)

Sawn Joint Width	Backer Rod Diameter ± 1/16"	DIMENSION "f"	DIMENSION "g"
1"	1 5/16"	7/8"	2 1/4"
7/8"	1 3/16"	13/16"	2"
3/4"	1"	3/4"	1 3/4"
5/8"	7/8"	11/16"	1 1/2"
1/2"	11/16"	5/8"	1 1/4"

STATE OF CALIFORNIA
DEPARTMENT OF TRANSPORTATION

CONCRETE PAVEMENT-JOINT DETAILS

NO SCALE

RSP P20 DATED MAY 15, 2009 SUPERSEDES STANDARD PLAN P20
DATED MAY 1, 2006 - PAGE 128 OF THE STANDARD PLANS BOOK DATED MAY 2006.

REVISED STANDARD PLAN RSP P20

2006 REVISED STANDARD PLAN RSP P20

5-8-09

DIST	COUNTY	ROUTE	POST MILES TOTAL PROJECT	SHEET NO.	TOTAL SHEETS
12	Ora	5	17.1/17.8	63	81

William K. Farnbach
REGISTERED CIVIL ENGINEER

May 15, 2009
PLANS APPROVAL DATE

REGISTERED PROFESSIONAL ENGINEER William K. Farnbach No. C49042 Exp. 9-30-10 CIVIL STATE OF CALIFORNIA

The State of California or its officers or agents shall not be responsible for the accuracy or completeness of electronic copies of this plan sheet.

To accompany plans dated 5-23-11

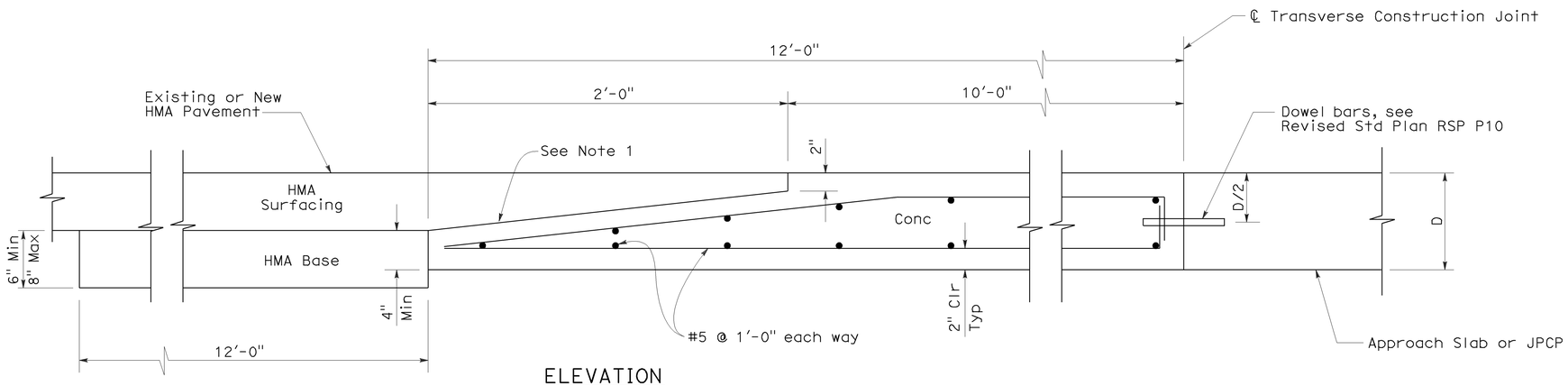

ELEVATION

CONCRETE PAVEMENT TO HOT MIXED ASPHALT PAVEMENT TRANSITION PANEL

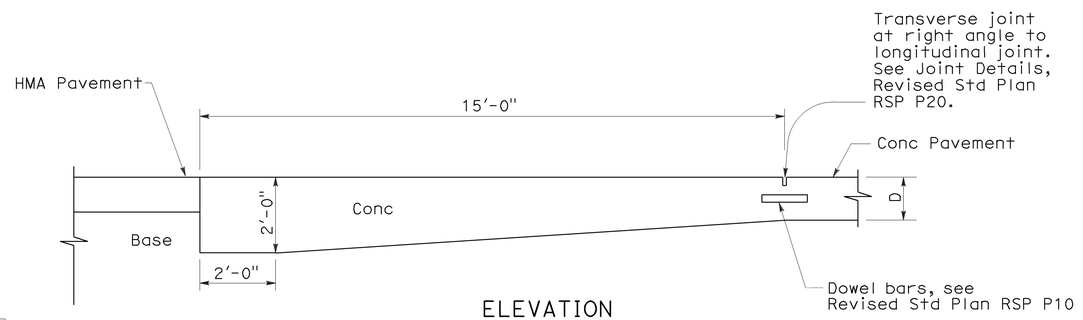

ELEVATION

PAVEMENT END ANCHOR

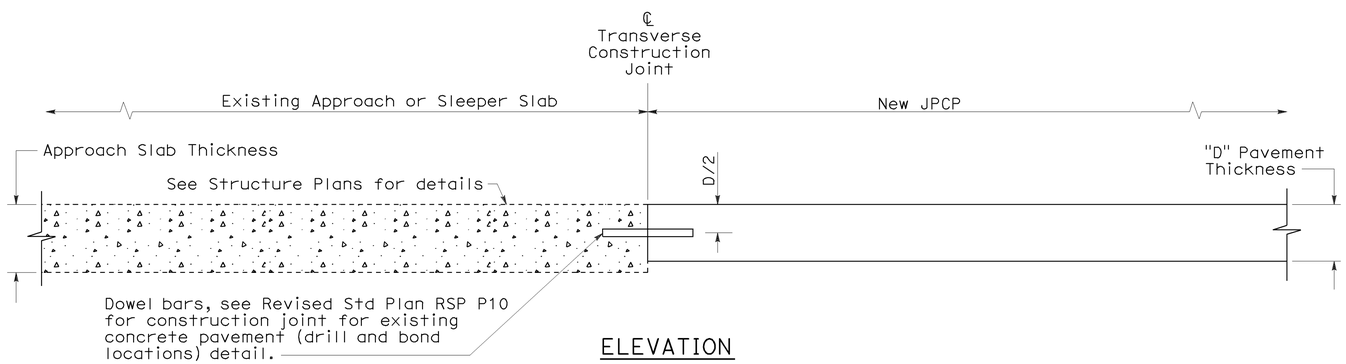

ELEVATION

NOTE:

1. Heavy broom finish.

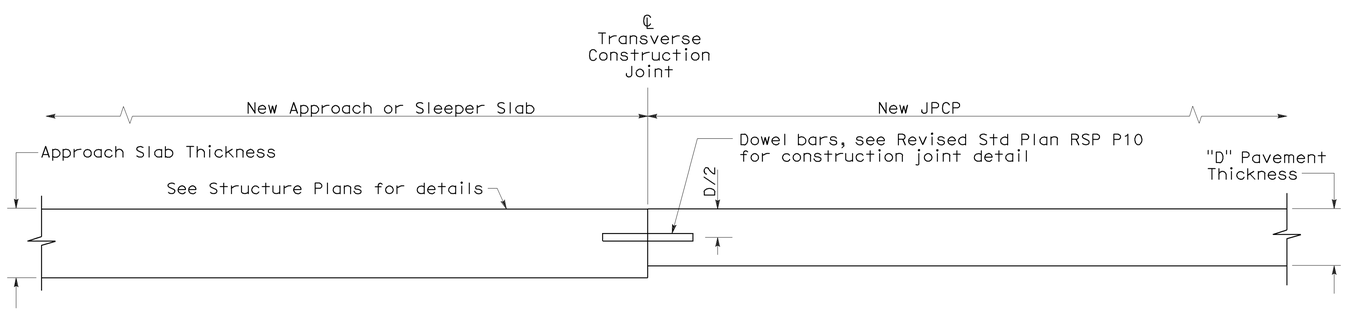

ELEVATION

CONCRETE PAVEMENT TRANSITION TO APPROACH OR SLEEPER SLAB

STATE OF CALIFORNIA
DEPARTMENT OF TRANSPORTATION

JOINTED PLAIN CONCRETE PAVEMENT-END PANEL PAVEMENT TRANSITIONS

NO SCALE

RSP P30 DATED MAY 15, 2009 SUPERSEDES STANDARD PLAN P30
DATED MAY 1, 2006 - PAGE 129 OF THE STANDARD PLANS BOOK DATED MAY 2006.

REVISED STANDARD PLAN RSP P30

2006 REVISED STANDARD PLAN RSP P30

5-8-09

DIST	COUNTY	ROUTE	POST MILES TOTAL PROJECT	SHEET NO.	TOTAL SHEETS
12	Ora	5	17.1/17.8	64	81

Randell D. Hiatt
REGISTERED CIVIL ENGINEER

June 6, 2008
PLANS APPROVAL DATE

REGISTERED PROFESSIONAL ENGINEER Randell D. Hiatt No. C50200 Exp. 6-30-09 CIVIL STATE OF CALIFORNIA

The State of California or its officers or agents shall not be responsible for the accuracy or completeness of electronic copies of this plan sheet.

To accompany plans dated 5-23-11

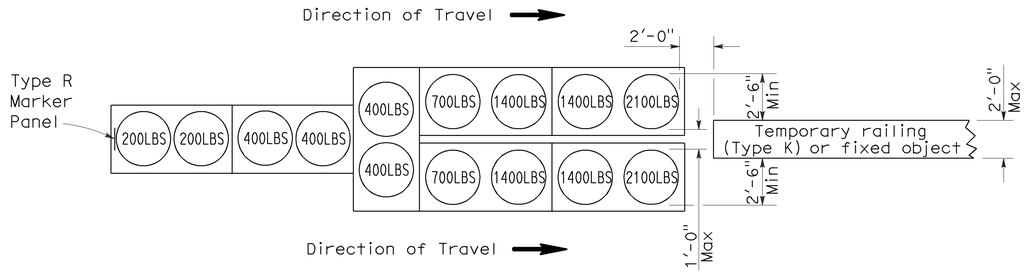

ARRAY 'TU14'

Approach speed 45 mph or more

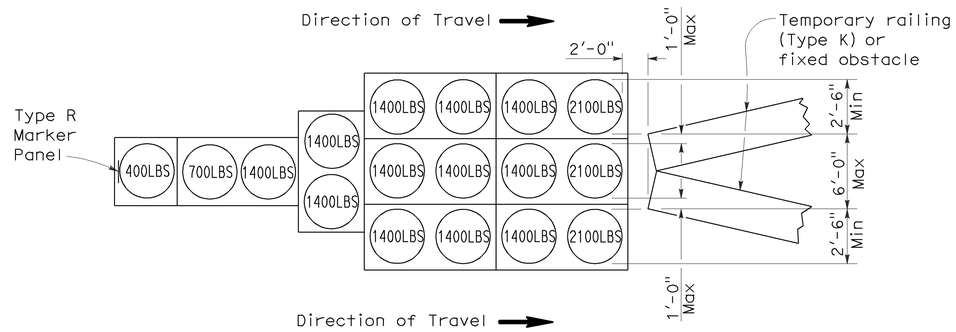

ARRAY 'TU17'

Approach speed less than 45 mph

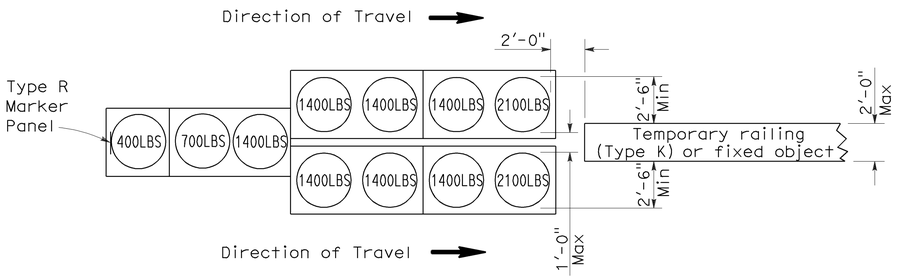

ARRAY 'TU11'

Approach speed less than 45 mph

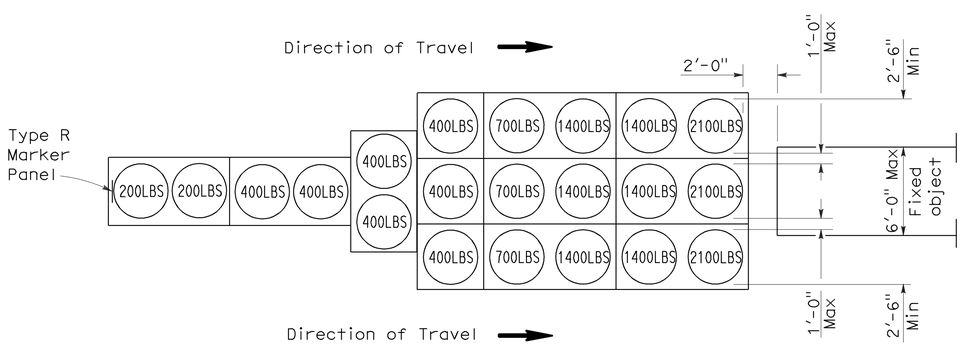

ARRAY 'TU21'

Approach speed 45 mph or more

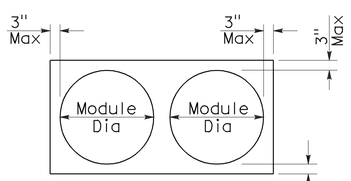

PLAN

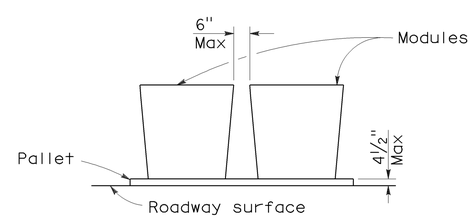

ELEVATION

CRASH CUSHION PALLET DETAIL

See Note 7

NOTES:

1. (XXX) Indicates sand filled module location and weight of sand in pounds for each module. Module spacing is based on the greater diameter of the module.
2. All sand weights are nominal.
3. Temporary crash cushion arrays shall not encroach on the traveled way.
4. Place the top of Type R marker panel 1" below the module lid.
5. Refer to Standard Plan A73B for marker details.
6. Approach speeds indicated conform to NCHRP 350 Report criteria.
7. Use of pallets is optional.

STATE OF CALIFORNIA
DEPARTMENT OF TRANSPORTATION

TEMPORARY CRASH CUSHION, SAND FILLED (UNIDIRECTIONAL)

NO SCALE

RSP T1A DATED JUNE 6, 2008 SUPERSEDES STANDARD PLAN T1A
DATED MAY 1, 2006 - PAGE 211 OF THE STANDARD PLANS BOOK DATED MAY 2006.

REVISED STANDARD PLAN RSP T1A

2006 REVISED STANDARD PLAN RSP T1A

5-15-08

DIST	COUNTY	ROUTE	POST MILES TOTAL PROJECT	SHEET NO.	TOTAL SHEETS
12	Ora	5	17.1/17.8	65	81

Randell D. Hiatt
REGISTERED CIVIL ENGINEER

June 6, 2008
PLANS APPROVAL DATE

REGISTERED PROFESSIONAL ENGINEER
Randell D. Hiatt
No. C50200
Exp. 6-30-09
CIVIL
STATE OF CALIFORNIA

The State of California or its officers or agents shall not be responsible for the accuracy or completeness of electronic copies of this plan sheet.

To accompany plans dated 5-23-11

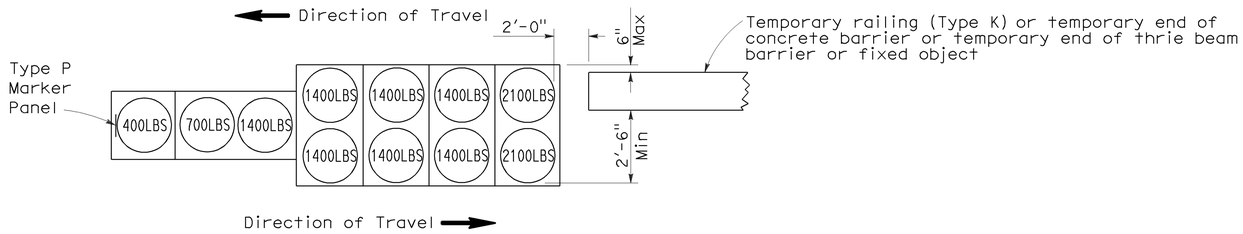

ARRAY 'TB11'

Approach speed less than 45 mph

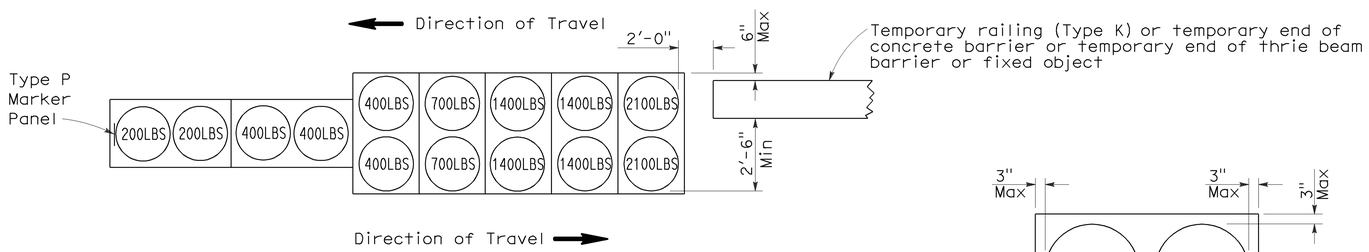

ARRAY 'TB14'

Approach speed 45 mph or more

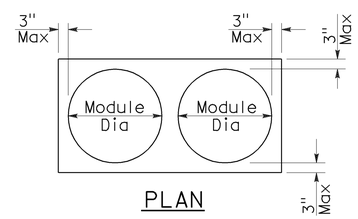

PLAN

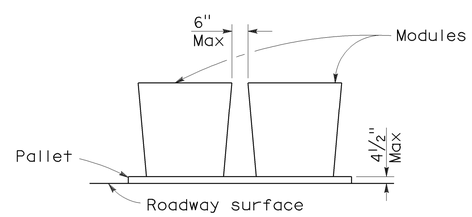

ELEVATION

CRASH CUSHION PALLET DETAIL

See Note 7

NOTES:

1. (XXX) Indicates sand filled module location and weight of sand in pounds for each module. Module spacing is based on the greater diameter of the module.
2. All sand weights are nominal.
3. Temporary crash cushion arrays shall not encroach on the traveled way.
4. Place the Type P marker panel so that the bottom of the panel rests upon the pallet.
5. Refer to Standard Plan A73B for marker details.
6. Approach speeds indicated conform to NCHRP 350 Report criteria.
7. Use of pallets is optional.

STATE OF CALIFORNIA
DEPARTMENT OF TRANSPORTATION

TEMPORARY CRASH CUSHION, SAND FILLED (BIDIRECTIONAL)

NO SCALE

RSP T1B DATED JUNE 6, 2008 SUPERSEDES STANDARD PLAN T1B
DATED MAY 1, 2006 - PAGE 212 OF THE STANDARD PLANS BOOK DATED MAY 2006.

REVISED STANDARD PLAN RSP T1B

2006 REVISED STANDARD PLAN RSP T1B

5-15-08

DIST	COUNTY	ROUTE	POST MILES TOTAL PROJECT	SHEET NO.	TOTAL SHEETS
12	Ora	5	17.1/17.8	66	81

Randell D. Hiatt
REGISTERED CIVIL ENGINEER

June 6, 2008
PLANS APPROVAL DATE

REGISTERED PROFESSIONAL ENGINEER
Randell D. Hiatt
No. C50200
Exp. 6-30-09
CIVIL
STATE OF CALIFORNIA

The State of California or its officers or agents shall not be responsible for the accuracy or completeness of electronic copies of this plan sheet.

To accompany plans dated 5-23-11

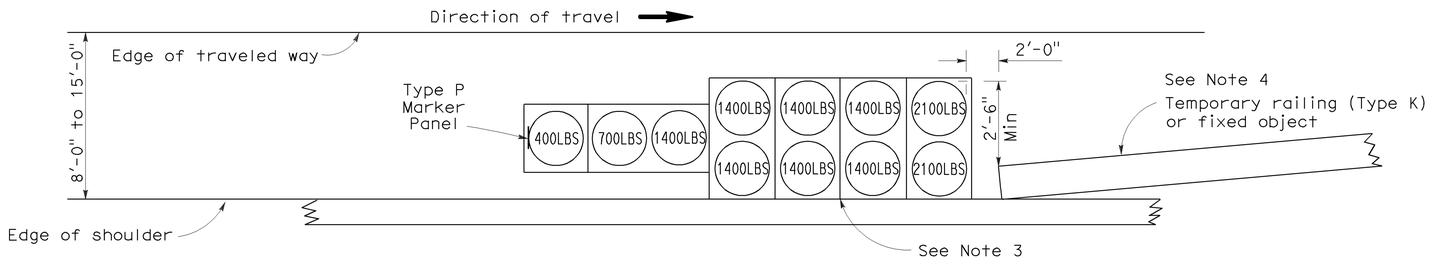

ARRAY 'TS11'

Approach speed less than 45 mph
See Note 9

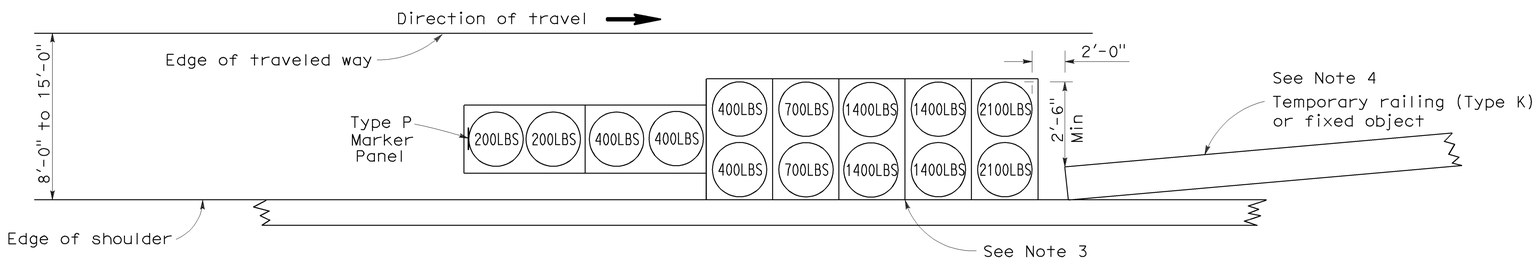

ARRAY 'TS14'

Approach speed 45 mph or more
See Note 9

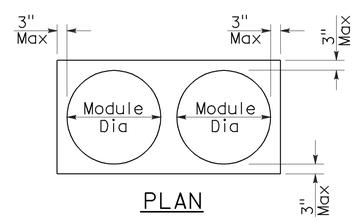

PLAN

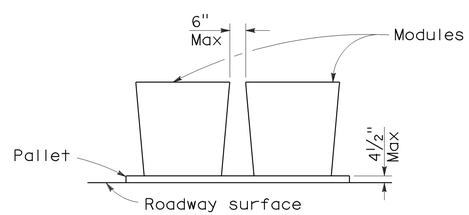

ELEVATION

CRASH CUSHION PALLET DETAIL

See Note 11

NOTES:

1. (XXX) Indicates sand filled module location and weight of sand in pounds for each module. Module spacing is based on the greater diameter of the module.
2. All sand weights are nominal.
3. The temporary crash cushion arrays shown on this plan shall be used only in locations where there will be traffic on one side of the temporary crash cushion array.
4. If the fixed object or approach end of the temporary railing is less than 15'-0" from the edge of traveled way, a temporary crash cushion is required in a construction or work zone.
5. Temporary crash cushion arrays shall not encroach on the traveled way.
6. Arrays for median shoulders shall conform to details shown on this plan for outside shoulders.
7. Place the Type P marker panel so that the bottom of the panel rests upon the pallet and faces traffic.
8. Refer to Standard Plan A73B for marker details.
9. For shoulder widths less than 8'-0", appropriate approved crash cushion protection, other than sand filled modules, shall be provided at fixed objects and at approach ends of temporary railing. The specific type of crash cushion shall be as shown on the project plans or as specified in the Special Provisions, or if not shown on the project plans or specified in the Special Provisions, shall be as approved by the Engineer.
10. Approach speeds indicated conform to NCHRP 350 Report criteria.
11. Use of pallets is optional.

STATE OF CALIFORNIA
DEPARTMENT OF TRANSPORTATION

TEMPORARY CRASH CUSHION, SAND FILLED (SHOULDER INSTALLATIONS)

NO SCALE

RSP T2 DATED JUNE 6, 2008 SUPERSEDES STANDARD PLAN T2
DATED MAY 1, 2006 - PAGE 213 OF THE STANDARD PLANS BOOK DATED MAY 2006.

REVISED STANDARD PLAN RSP T2

2006 REVISED STANDARD PLAN RSP T2

5-15-08

Dist	COUNTY	ROUTE	POST MILES TOTAL PROJECT	SHEET No.	TOTAL SHEETS
12	Ora	5	17.1/17.8	67	81

Randell D. Hiatt
REGISTERED CIVIL ENGINEER

May 20, 2011
PLANS APPROVAL DATE

REGISTERED PROFESSIONAL ENGINEER
Randell D. Hiatt
No. C50200
Exp. 6-30-11
CIVIL
STATE OF CALIFORNIA

The State of California or its officers or agents shall not be responsible for the accuracy or completeness of electronic copies of this plan sheet.

To accompany plans dated 5-23-11

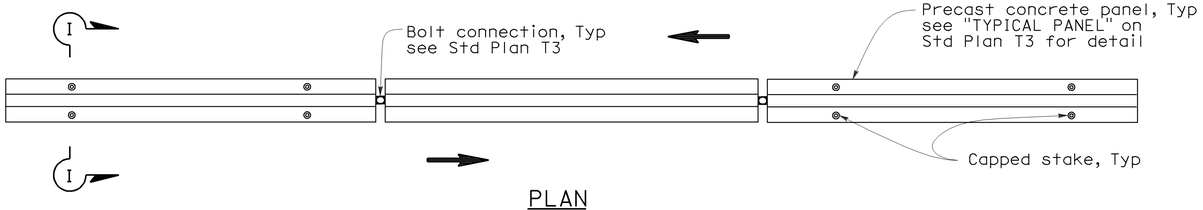

PLAN

RAILING STAKING CONFIGURATION FOR TWO-WAY TRAFFIC

See Note 1

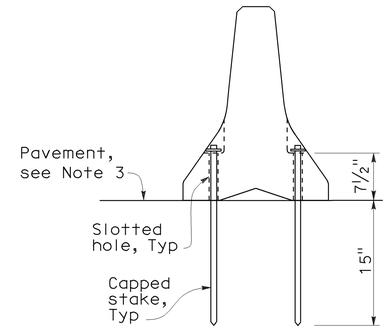

SECTION I-I

NOTES:

1. Where Type K Temporary Railing is placed as a temporary or long term barrier in two-way traffic on highways with less than 24" from the edge of traveled way, use four capped stakes per every other panel with end panels staked.
2. Where Type K Temporary Railing is placed 3" to 24" from the edge of an excavation on highways, use two capped stakes per panel along the traffic side.
3. Staked Type K Temporary Railing must be supported by at least 4" thick concrete, hot mix asphalt or existing asphalt concrete pavement.
4. The minimum yield strength for the washer must be 60,000 psi.
5. Direction of adjacent traffic indicated by ⟹.

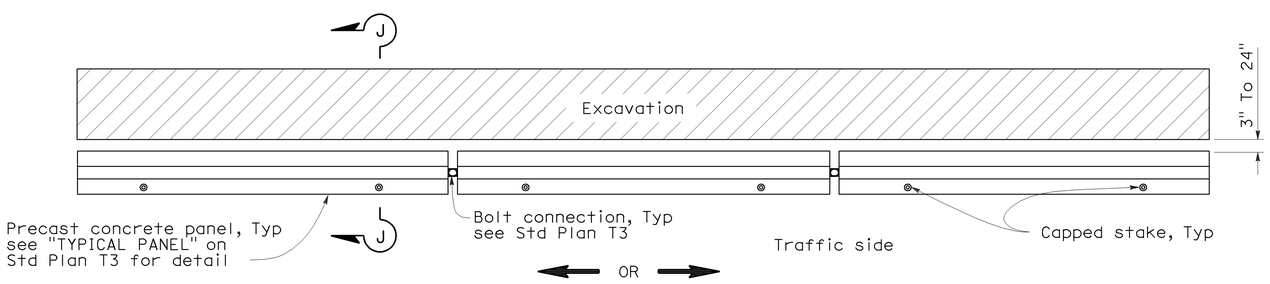

PLAN

RAILING STAKING CONFIGURATION ADJACENT TO AN EXCAVATION

See Note 2

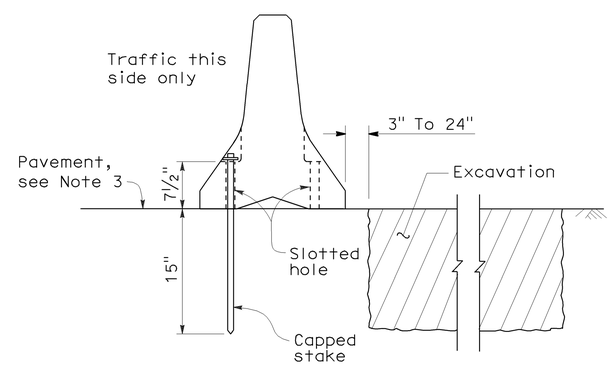

SECTION J-J

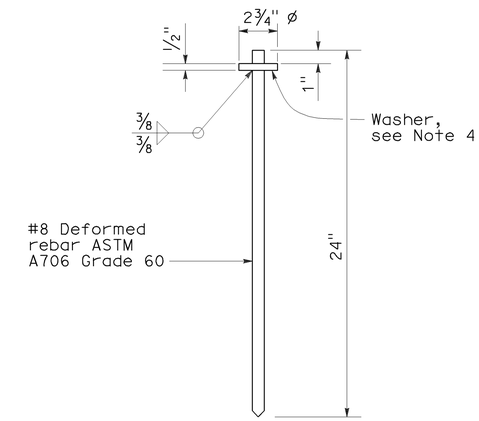

CAPPED STAKE DETAIL

STATE OF CALIFORNIA
DEPARTMENT OF TRANSPORTATION

TEMPORARY RAILING (TYPE K)

NO SCALE

NSP T3A DATED MAY 20, 2011 SUPPLEMENTS
THE STANDARD PLANS BOOK DATED MAY 2006.

NEW STANDARD PLAN NSP T3A

2006 NEW STANDARD PLAN NSP T3A

DIST	COUNTY	ROUTE	POST MILES TOTAL PROJECT	SHEET NO.	TOTAL SHEETS
12	Ora	5	17.1/17.8	68	81

REGISTERED CIVIL ENGINEER

November 17, 2006
PLANS APPROVAL DATE

REGISTERED PROFESSIONAL ENGINEER — Greg W. Edwards — No. C36386 — Exp. 6-30-08 — CIVIL — STATE OF CALIFORNIA

The State of California or its officers or agents shall not be responsible for the accuracy or completeness of electronic copies of this plan sheet.

To accompany plans dated 5-23-11

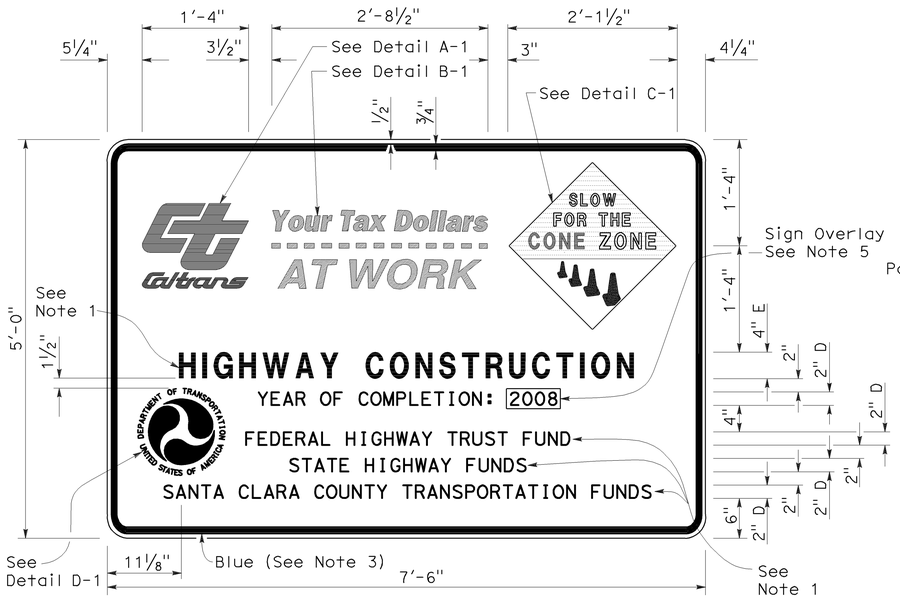

TYPE 1

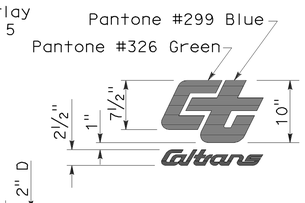

DETAIL A-1

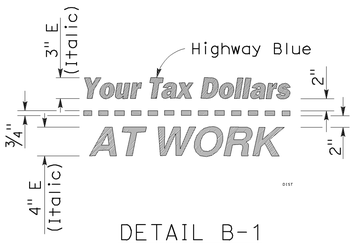

DETAIL B-1
(See Note 3)

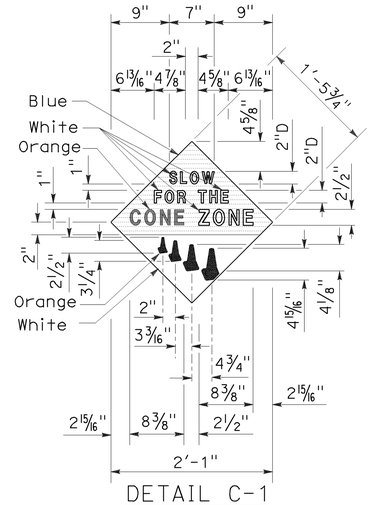

DETAIL C-1
(See Note 4)

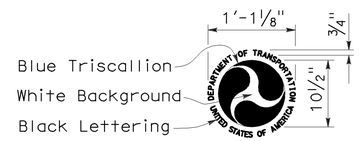

DETAIL D-1
(See Note 6)

NOTES:

1. The sign messages shown for type of project and fund types are examples only. See the Special Provisions for the applicable type of project and fund type messages to be used.
2. Except as otherwise shown, the legend of sign shall be black on a white background (non-reflective).
3. The border of the signs and details "B-1" and "B-2" shall be blue (non-reflective).
4. The diamond in details "C-1" and "C-2" shall be blue for the background of message, " SLOW FOR THE CONE ZONE", and white background for the orange cones. The color and type of font for the "SLOW FOR THE CONE ZONE" message shall be: "SLOW" white D; "FOR THE" white D; "CONE" orange Arial font; "ZONE" white Arial font.
5. Year of completion of project construction shown on the overlay is an example only. See the Special Provisions.
6. Use when the Project involves Federal Highway Trust Fund.

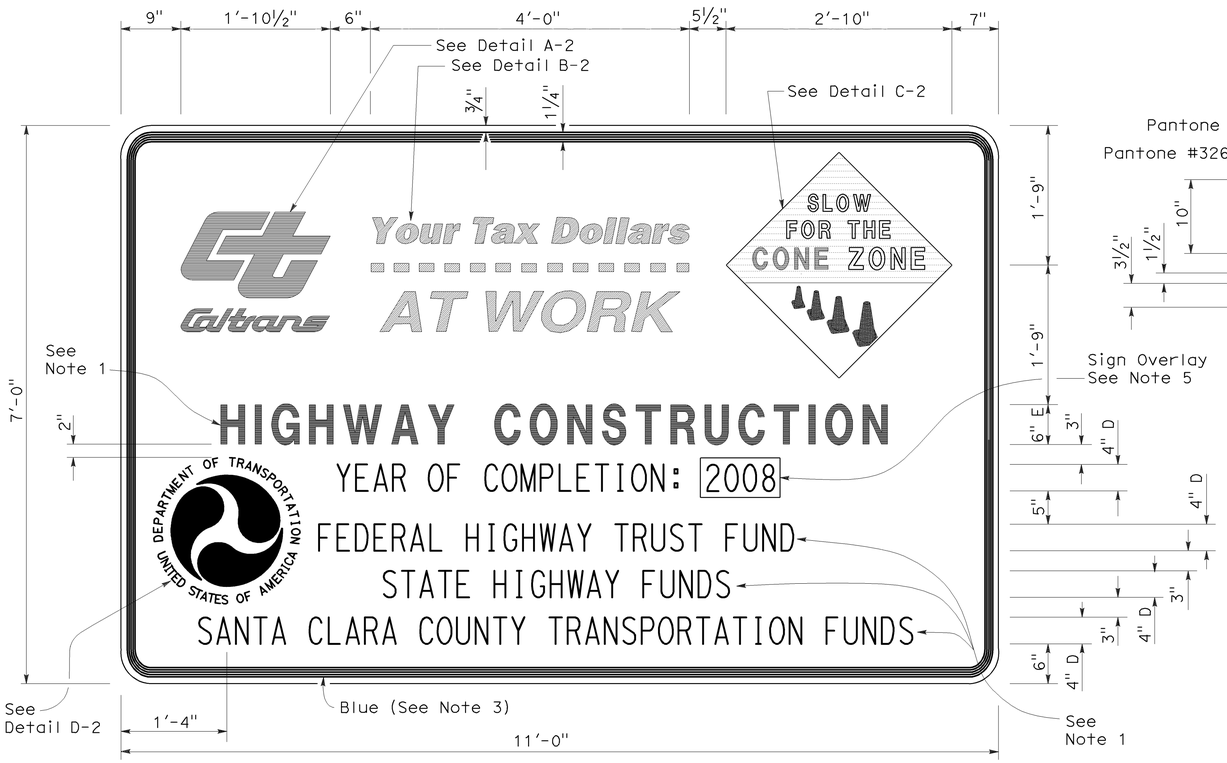

TYPE 2

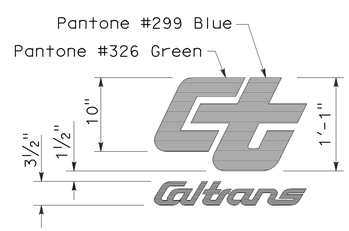

DETAIL A-2

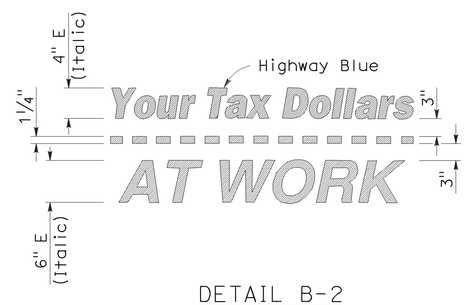

DETAIL B-2
(See Note 3)

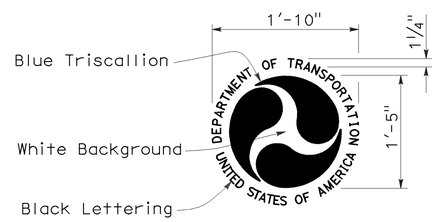

DETAIL D-2
(See Note 6)

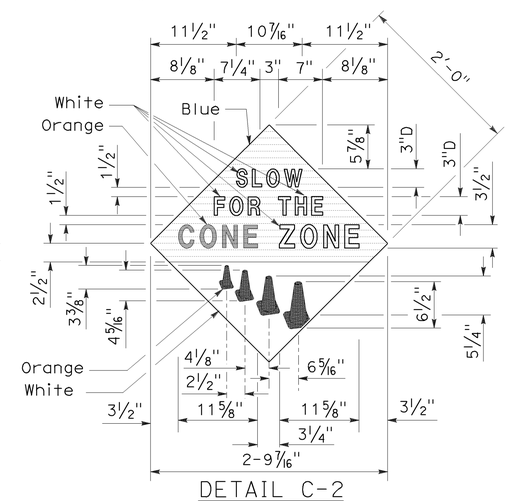

DETAIL C-2
(See Note 4)

STATE OF CALIFORNIA
DEPARTMENT OF TRANSPORTATION

CONSTRUCTION PROJECT FUNDING IDENTIFICATION SIGNS

NO SCALE

RSP T7 DATED NOVEMBER 17, 2006 SUPERSEDES STANDARD PLAN T7 DATED MAY 1, 2006 - PAGE 217 OF THE STANDARD PLANS BOOK DATED MAY 2006.

REVISED STANDARD PLAN RSP T7

2006 REVISED STANDARD PLAN RSP T7

9-7-06

DIST	COUNTY	ROUTE	POST MILES TOTAL PROJECT	SHEET NO.	TOTAL SHEETS
12	Ora	5	17.1/17.8	69	81

LICENSED LANDSCAPE ARCHITECT

August 15, 2008
PLANS APPROVAL DATE

LICENSED LANDSCAPE ARCHITECT Robert B. Schott 3625 Signature 11-04-08 Renewal Date 08-11-08 Date STATE OF CALIFORNIA

The State of California or its officers or agents shall not be responsible for the accuracy or completeness of electronic copies of this plan sheet.

To accompany plans dated 5-23-11

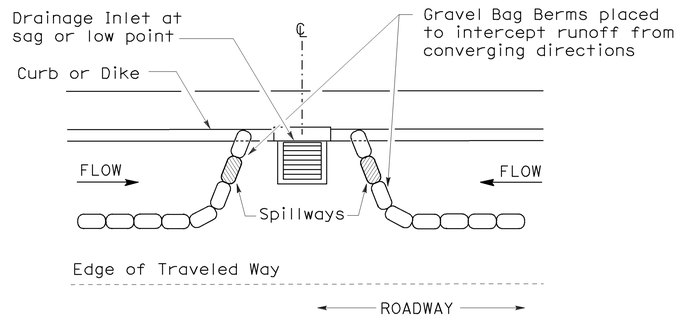

PLAN

CONFIGURATION FOR SAG POINT INLET (GRAVEL BAG BERM)

GRAVEL BAG BERM (TYPE 3A) SPACING TABLE

SLOPE OF ROADWAY (PERCENT)	1 to 3.9	4 to 5.9	6 to 7.9	8 to 10	10+
INTERVAL BETWEEN BERM	100′	75′	50′	25′	12′

For slope of less than 1%, install barriers only if erosion/sediment is prevalent

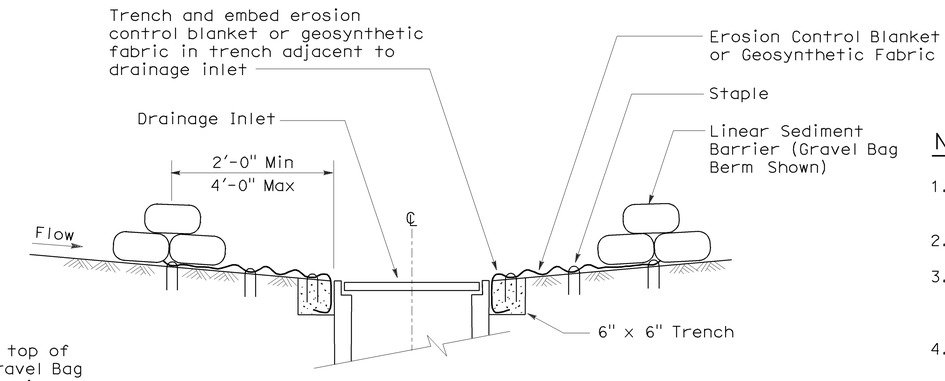

SECTION A-A

NOTES:

1. Place safety cones adjacent to drainage inlet protection.
2. Dimensions may vary to fit field conditions.
3. Install a minimum of 3 gravel bag berms upstream of each drainage inlet to be protected.
4. Position erosion control blanket or geosynthetic fabric at edge of concrete apron and secure in trench.
5. Erosion control blanket or geosynthetic fabric is not required if the area adjacent to the drainage inlet is vegetated or paved.

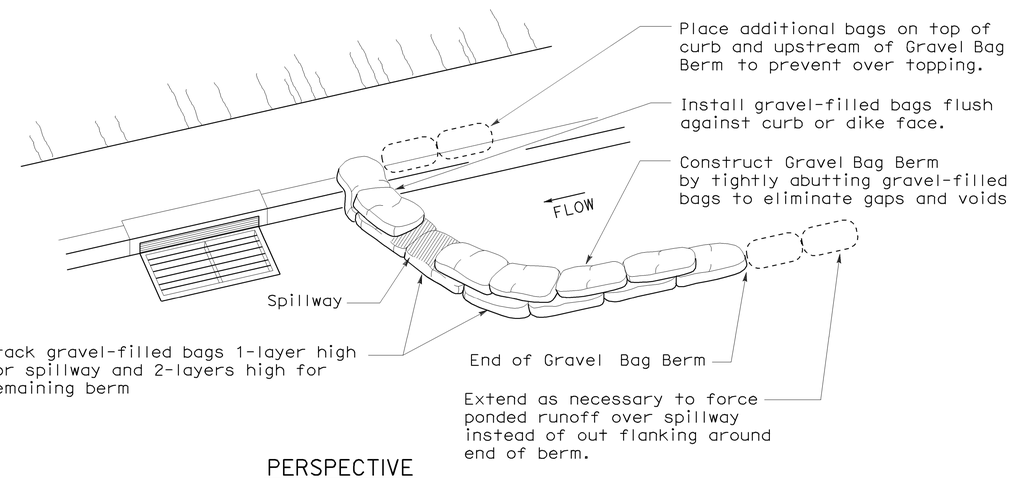

PERSPECTIVE

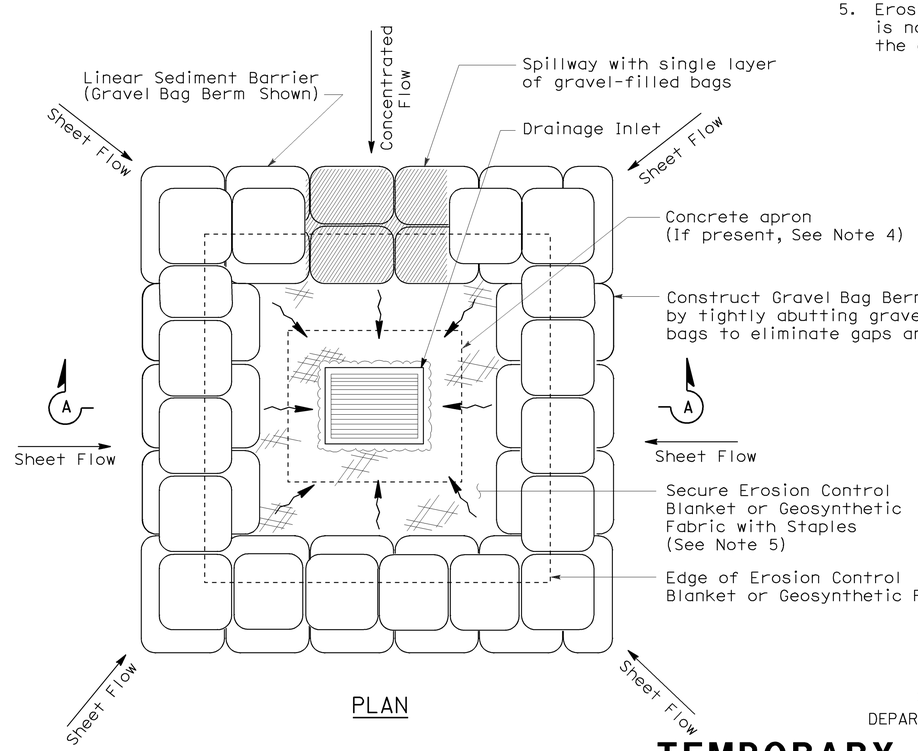

PLAN

TEMPORARY DRAINAGE INLET PROTECTION (TYPE 3B)

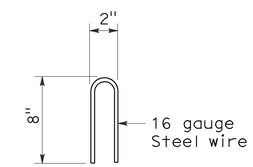

STAPLE DETAIL

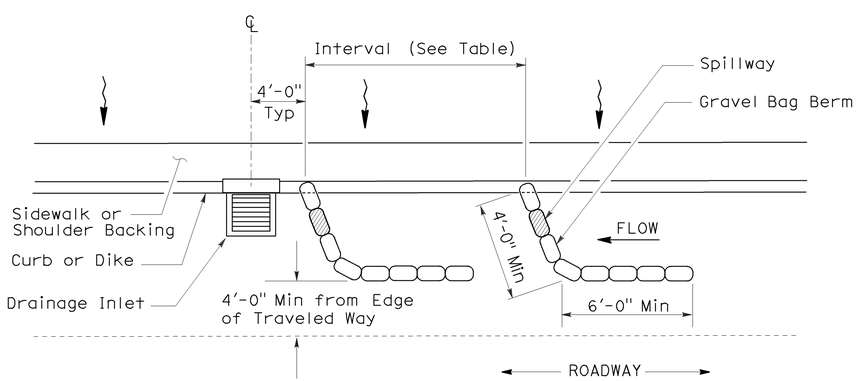

PLAN

TEMPORARY DRAINAGE INLET PROTECTION (TYPE 3A) (GRAVEL BAG BERM)

STATE OF CALIFORNIA
DEPARTMENT OF TRANSPORTATION

TEMPORARY WATER POLLUTION CONTROL DETAILS (TEMPORARY DRAINAGE INLET PROTECTION)

NO SCALE

NSP T62 DATED AUGUST 15, 2008 SUPPLEMENTS THE STANDARD PLANS BOOK DATED MAY 2006.

NEW STANDARD PLAN NSP T62

2006 NEW STANDARD PLAN NSP T62

7-11-08

DIST	COUNTY	ROUTE	POST MILES TOTAL PROJECT	SHEET NO.	TOTAL SHEETS
12	Ora	5	17.1/17.8	70	81

Robert B. Schott
LICENSED LANDSCAPE ARCHITECT

August 15, 2008
PLANS APPROVAL DATE

LICENSED LANDSCAPE ARCHITECT Robert B. Schott 3625 Signature 11-04-08 Renewal Date 08-11-08 Date STATE OF CALIFORNIA

The State of California or its officers or agents shall not be responsible for the accuracy or completeness of electronic copies of this plan sheet.

To accompany plans dated 5-23-11

FLEXIBLE SEDIMENT BARRIER SPACING TABLE

SLOPE OF ROADWAY (PERCENT)	0 to 0.9	1 to 1.9	2 to 2.9	3 to 4	5+
INTERVAL BETWEEN BARRIERS	50′	35′	30′	25′	20′
ANGLE FROM FACE OF CURB	70°	70°	70°	45°	45°
SUGGESTED BARRIER LENGTH	6′	6′	6′	6′	6′

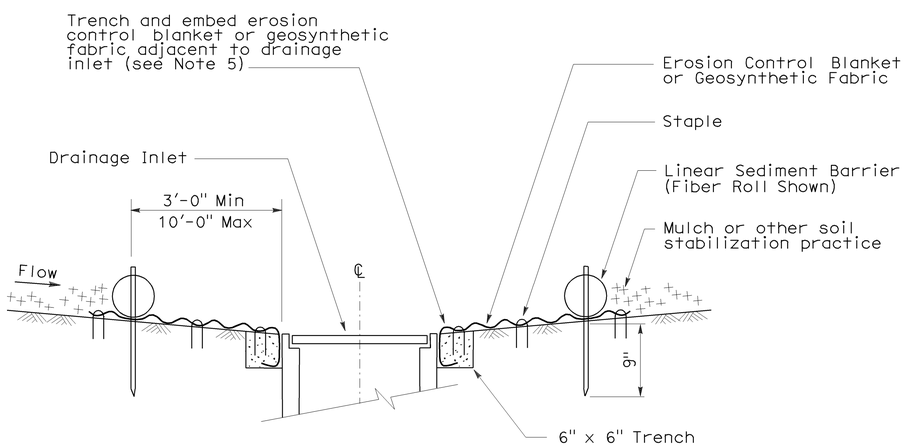

SECTION A-A

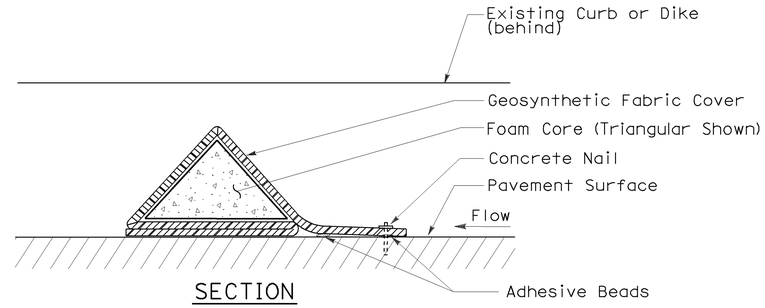

SECTION

FLEXIBLE SEDIMENT BARRIER DETAIL (FOAM BARRIER SHOWN)

NOTES:

1. See Standard Plan T51 for Temporary Silt Fence.
2. Dimensions may vary to fit field conditions.
3. Install a minimum of 3 flexible sediment barriers upstream of each drainage inlet to be protected.
4. Position erosion control blanket or geosynthetic fabric at edge of concrete apron and secure in trench.
5. Erosion control blanket or geosynthetic fabric is not required if the area adjacent to the drainage inlet is vegetated.

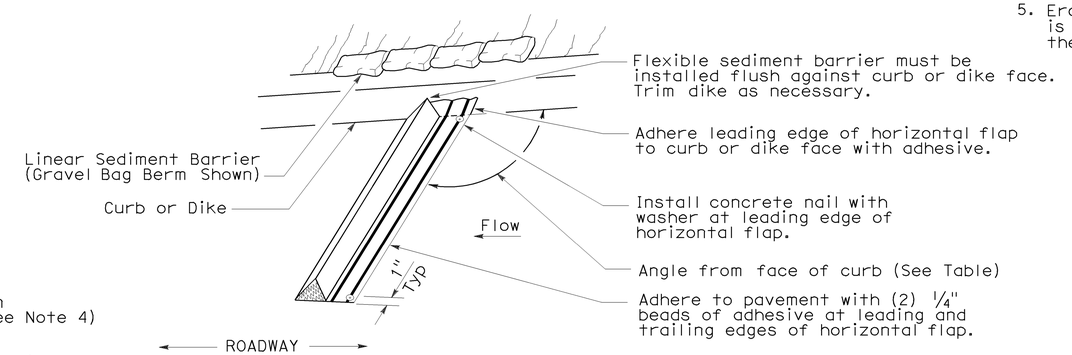

PERSPECTIVE

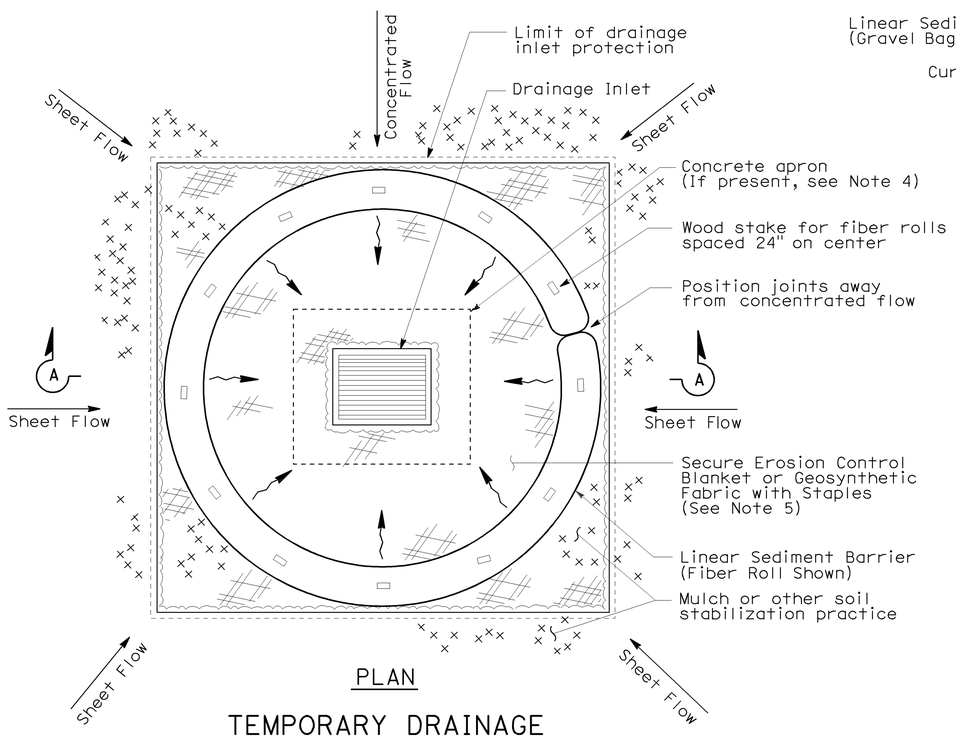

PLAN

TEMPORARY DRAINAGE INLET PROTECTION (TYPE 4A)

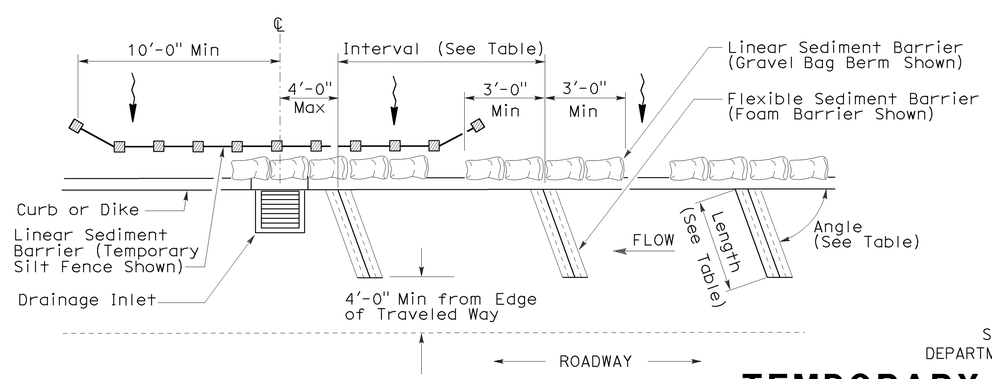

PLAN

TEMPORARY DRAINAGE INLET PROTECTION (TYPE 4B) FLEXIBLE SEDIMENT BARRIER

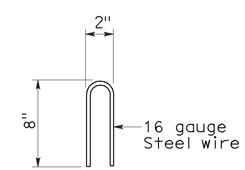

STAPLE DETAIL

STATE OF CALIFORNIA
DEPARTMENT OF TRANSPORTATION

TEMPORARY WATER POLLUTION CONTROL DETAILS (TEMPORARY DRAINAGE INLET PROTECTION)

NO SCALE

NSP T63 DATED AUGUST 15, 2008 SUPPLEMENTS THE STANDARD PLANS BOOK DATED MAY 2006.

NEW STANDARD PLAN NSP T63

2006 NEW STANDARD PLAN NSP T63

7-11-08

DIST	COUNTY	ROUTE	POST MILES TOTAL PROJECT	SHEET NO.	TOTAL SHEETS
12	Ora	5	17.1/17.8	71	81

LICENSED LANDSCAPE ARCHITECT

August 15, 2008
PLANS APPROVAL DATE

The State of California or its officers or agents shall not be responsible for the accuracy or completeness of electronic copies of this plan sheet.

LICENSED LANDSCAPE ARCHITECT — Robert B. Schott 3625 — Signature — 11-04-08 Renewal Date — 08-11-08 Date — STATE OF CALIFORNIA

To accompany plans dated 5-23-11

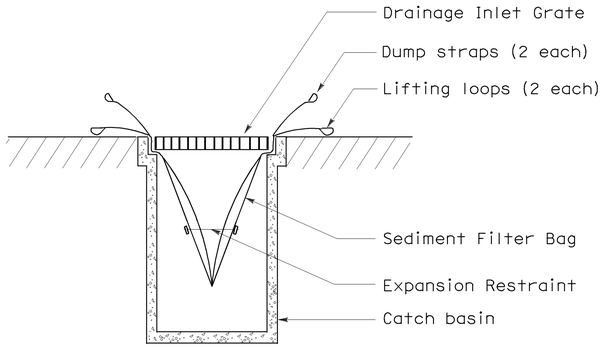

SECTION B-B

SEDIMENT FILTER BAG DETAIL

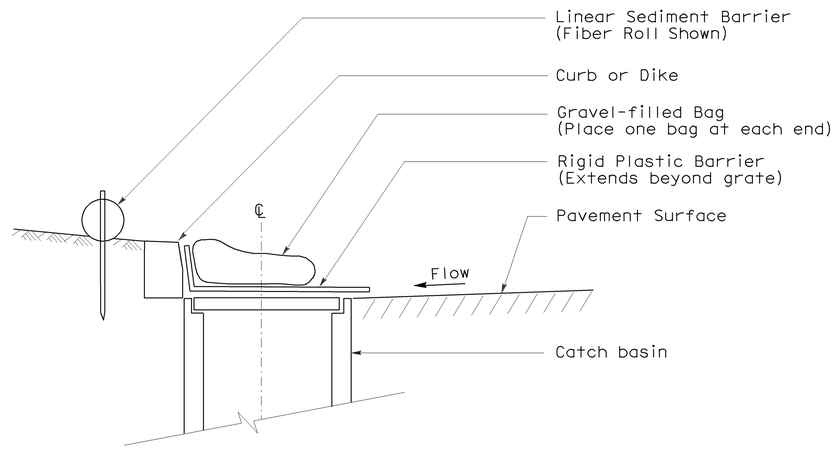

SECTION

TEMPORARY DRAINAGE INLET PROTECTION (TYPE 6A) (CATCH BASIN WITH GRATE)

NOTES:

1. See Standard Plan T51 for Temporary Silt Fence.
2. Dimensions may vary to fit field conditions.

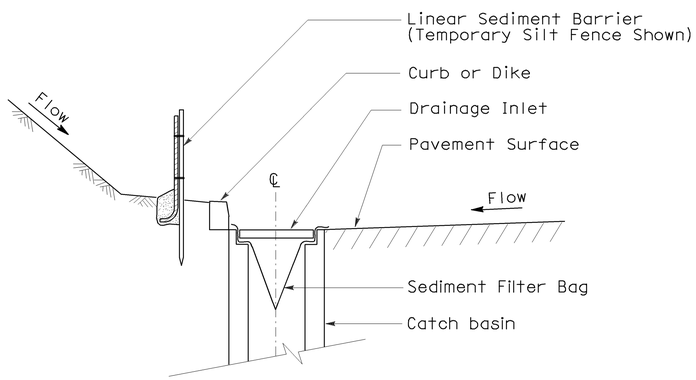

SECTION A-A

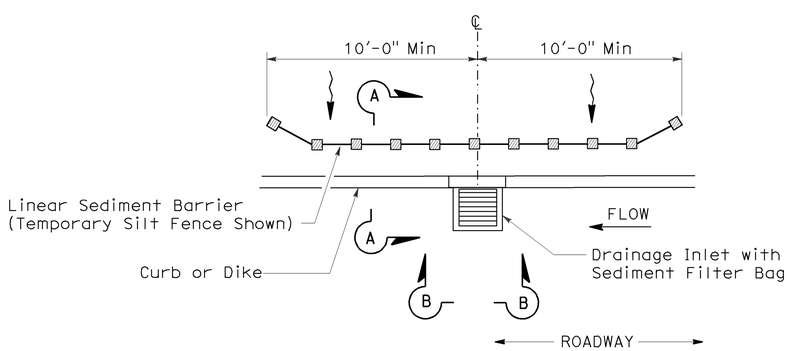

PLAN

TEMPORARY DRAINAGE INLET PROTECTION (TYPE 5) (SEDIMENT FILTER BAG)

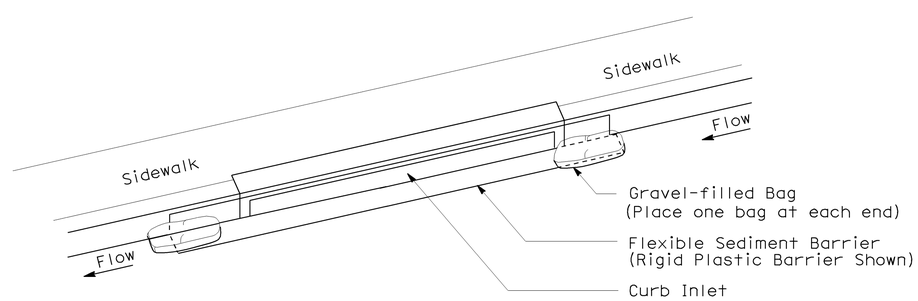

PERSPECTIVE

TEMPORARY DRAINAGE INLET PROTECTION (TYPE 6B) (CURB INLET WITHOUT GRATE)

STATE OF CALIFORNIA
DEPARTMENT OF TRANSPORTATION

TEMPORARY WATER POLLUTION CONTROL DETAILS (TEMPORARY DRAINAGE INLET PROTECTION)

NO SCALE

NSP T64 DATED AUGUST 15, 2008 SUPPLEMENTS THE STANDARD PLANS BOOK DATED MAY 2006.

NEW STANDARD PLAN NSP T64

2006 NEW STANDARD PLAN NSP T64

7-11-08

DIST	COUNTY	ROUTE	POST MILES TOTAL PROJECT	SHEET NO.	TOTAL SHEETS
12	Ora	5	17.1/17.8	72	81

REGISTERED ELECTRICAL ENGINEER

October 5, 2007
PLANS APPROVAL DATE

REGISTERED PROFESSIONAL ENGINEER Jeffery G. McRae No. E14512 Exp. 6-30-08 ELECTRICAL STATE OF CALIFORNIA

The State of California or its officers or agents shall not be responsible for the accuracy or completeness of electronic copies of this plan sheet.

To accompany plans dated 5-23-11

ELECTROLIERS

STANDARD TYPES
15, 15D
15 STRUCTURE
21, 21D STRUCTURE
30
31
32
35
36-20A

High mast light pole

Double Arm lighting standard

Existing electrolier

Electrolier foundation (Future installation)

NOTES:

1. Luminaires shall be 310 W HPS when installed on Type 21, 21D, 30, 31, 32, 35 and 36-20A Standards, unless otherwise specified. Luminaires shall be 200 W HPS when installed on other type standards or poles, unless otherwise specified.
2. Luminaires shall be the cutoff type, ANSI Type III medium cutoff lighting distribution, unless otherwise specified.
3. Variations noted adjacent to symbol on project plans.

Electrolier (see project notes or project plans)

Luminaire on wood pole

STANDARD NOTES:

- AB — Abandon. If applied to conduit, remove conductors.
- BC — Install pull box in existing conduit run.
- BP — Pedestrian barricade, type as indicated on plan.
- CB — Install conduit into existing pull box.
- CC — Connect new and existing conduit. Remove existing conductors and install conductors as indicated.
- CF — Conduit to remain for future use. Remove conductors. Install pull wire or rope.
- DH — Detector handhole.
- FA — Foundation to be abandoned.
- IS — Install sign on signal mast arm.
- NS — No slip base on standard.
- PEC — Photoelectric control.
- PEU — Photoelectric unit.
- RC — Equipment or material to be removed and become the property of the Contractor.
- RE — Remove electrolier, fuses and ballast. Tape ends of conductors.
- RL — Relocate equipment.
- RR — Remove and reuse equipment.
- RS — Remove and salvage equipment.
- SC — Splice new to existing conductors.
- SD — Service disconnect.
- SF — Standard to remain for future use. Remove luminaire, pole conductors, fuses and ballast.
- TSP — Telephone service point.

ABBREVIATIONS AND EQUIPMENT DESIGNATIONS

PROPOSED	EXISTING	
BBS	bbs	Battery backup system
BC	bc	Bolt circle
C	C	Conduit
CCTV	cctv	Closed circuit television
CKT	ckt	Circuit
CMS	cms	Changeable message sign
DLC	dlc	Loop detector lead-in cable
EMS	ems	Extinguishable message sign
EVC	evc	Emergency vehicle cable
EVD	evd	Emergency vehicle detector
FB	fb	Flashing beacon
FBCA	fbca	Flashing beacon control assembly
FBS	fbs	Flashing beacon with slip base
FO	fo	Fiber optic
G	G	Ground (Equipment Grounding Conductor)
GFCI	GFCI	Ground fault circuit interrupt
HAR	har	Highway advisory radio
HEX	hex	Hexagonal
HPS	hps	High pressure sodium
IISNS	iisns	Internally illuminated street name sign
ISL	isl	Induction sign lighting
LED	led	Light emitting diode
LMA	lma	Luminaire mast arm
LPS	lps	Low pressure sodium
LTG	ltg	Lighting
LUM	lum	Luminaire
MAT	mat	Mast arm mounting vehicle signal faces, top attachment
MAS	mas	Mast arm mounting vehicle signal faces, side attachment
MAS-4A	mas-4A	Mast arm mounting vehicle signal faces, side attachment - 4 signal section
MAS-4B	mas-4B	
MAS-4C	mas-4C	
MAS-5A	mas-5A	Mast arm mounting vehicle signal faces, side attachment - 5 signal section
MAS-5B	mas-5B	
MC	mc	Mercury contactor
M/M	m/m	Multiple to multiple transformer
MT	mt	Conduit with pull wire or rope only
MTG	mtg	Mounting
	mv	Mercury vapor lighting fixture
N	N	Neutral (Grounded Conductor)
NC	NC	Normally closed
NO	NO	Normally open
PB	pb	Pull box
PEC	pec	Photoelectric control (Type I, II, III, IV or V as shown)
PED	ped	Pedestrian
PEU	peu	Photoelectric unit
PPB	ppb	Pedestrian push button
RL		Relocated equipment
RM	rm	Ramp metering
SB	sb	Slip base
SIC	sic	Signal interconnect cable
SIG	sig	Signal
SMA	sma	Signal mast arm
SNS	sns	Street name sign
SP	sp	Service point
TDC	tdc	Telephone demarcation cabinet
TMS	tms	Traffic monitoring station
TOS	tos	Traffic Operations System
VEH	veh	Vehicle
XFMR	xfmr	Transformer
COMM	comm	Communication
RWIS	rwis	Roadway weather information system

SOFFIT AND WALL MOUNTED LUMINAIRES

Pendant, 70 W HPS unless otherwise specified.

Flush, 70 W HPS unless otherwise specified.

Wall surface, 70 W HPS unless otherwise specified.

Existing soffit or wall luminaire to remain unmodified.

Existing soffit or wall luminaire to be modified as specified.

NOTE:

Arrow indicates "street side" of luminaire.

STATE OF CALIFORNIA
DEPARTMENT OF TRANSPORTATION

ELECTRICAL SYSTEMS (SYMBOLS AND ABBREVIATIONS)

NO SCALE

RSP ES-1A DATED OCTOBER 5, 2007 SUPERSEDES STANDARD PLAN ES-1A DATED MAY 1, 2006 - PAGE 400 OF THE STANDARD PLANS BOOK DATED MAY 2006.

REVISED STANDARD PLAN RSP ES-1A

2006 REVISED STANDARD PLAN RSP ES-1A

DIST	COUNTY	ROUTE	POST MILES TOTAL PROJECT	SHEET NO.	TOTAL SHEETS
12	Ora	5	17.1/17.8	73	81

REGISTERED ELECTRICAL ENGINEER

October 5, 2007
PLANS APPROVAL DATE

REGISTERED PROFESSIONAL ENGINEER Jeffery G. McRae No. E14512 Exp. 6-30-08 ELECTRICAL STATE OF CALIFORNIA

The State of California or its officers or agents shall not be responsible for the accuracy or completeness of electronic copies of this plan sheet.

To accompany plans dated 5-23-11

CONDUIT

PROPOSED	EXISTING	
		Lighting Conduit, unless otherwise indicated or noted
		Traffic signal conduit
C	c	Communication conduit
T	t	Telephone conduit
F	f	Fire alarm conduit
FO	fo	Fiber optic conduit
		Conduit termination (RSP ES-9A C)
R	r	Conduit riser in/on structure or service pole

SERVICE EQUIPMENT

PROPOSED	EXISTING	
OH	oh	Overhead lines
U	U	Wood pole "U" indicates utility owned
		Pole guy with anchor
		Utility transformer - ground mounted
III		Service equipment enclosure type
		Service equipment enclosure door indicates front of enclosure
T	t	Telephone demarcation cabinet

POLE-MOUNTED SERVICE DESIGNATION

Type of installation

TYPE H SERVICE - 28'-10" ← Pole height above grade

ILLUMINATED OVERHEAD SIGN

PROPOSED	EXISTING	
		Overhead sign - Single post
		Overhead sign - Two post
		Overhead sign - Mounted on structure
		Overhead sign with electrolier

SIGNAL EQUIPMENT

PROPOSED	EXISTING	
		Pedestrian signal face
		Pedestrian push button post
		Pedestrian barricade
		Vehicle signal face (with backplate, 3-Section: red, yellow and green)
		Vehicle signal face with angle visors
PV	PV	Modifications of basic symbols: "L" indicates all non-arrow sections louvered "LG" indicates louvered green section only "PV" indicates 12" programmed visibility sections "8" indicates all 8" sections (only when specified)
		Type 15TS and Vehicle signal face
		Vehicle signal face with red, yellow and green left arrow sections
		Vehicle signal face with red and yellow sections and up green arrow
		Vehicle signal face (5 Section) with red, yellow and green sections and yellow and green right arrows
		Type 1 Standard and attached vehicle signal faces
		Standard with signal mast arm only and attached vehicle signal faces and internally illuminated street name sign
		Type 33 Standard, Left-turn vehicle signal face and sign
		Standard with luminaire and signal mast arms and attached vehicle signal faces
		Cantilever flashing beacon Type 9 Frame, with a sign unless otherwise specified or indicated
		Type 15-FBS Standard with two vehicle signal face sections with lens, backplate and visor with a sign
R	Y	Flashing beacon. One vehicle signal face section with lens, backplate and visor. "R" indicates red indication, "Y" indicates yellow indication
		Controller assembly. Door indicates front of cabinet

SIGNAL EQUIPMENT Cont

PROPOSED	EXISTING	
		Guard post
		Type 1 Standard with "Meter On" sign
		Emergency Vehicle detector

NOTES:

1. All signal sections shall be 12" unless shown otherwise.
2. Signal heads shall be provided with backplates unless shown otherwise.
3. Signal indication shall be LED.

STATE OF CALIFORNIA
DEPARTMENT OF TRANSPORTATION

ELECTRICAL SYSTEMS (SYMBOLS AND ABBREVIATIONS)

NO SCALE

RSP ES-1B DATED OCTOBER 5, 2007 SUPERCEDES STANDARD PLAN ES-1B DATED MAY 1, 2006 - PAGE 401 OF THE STANDARD PLANS BOOK DATED MAY 2006.

REVISED STANDARD PLAN RSP ES-1B

2006 REVISED STANDARD PLAN RSP ES-1B

7-10-07

DIST	COUNTY	ROUTE	POST MILES TOTAL PROJECT	SHEET NO.	TOTAL SHEETS
12	Ora	5	17.1/17.8	74	81

REGISTERED ELECTRICAL ENGINEER

October 5, 2007
PLANS APPROVAL DATE

REGISTERED PROFESSIONAL ENGINEER
Jeffery G. McRae
No. E14512
Exp. 6-30-08
ELECTRICAL
STATE OF CALIFORNIA

The State of California or its officers or agents shall not be responsible for the accuracy or completeness of electronic copies of this plan sheet.

To accompany plans dated 5-23-11

EQUIPMENT IDENTIFICATION

ILLUMINATED SIGN IDENTIFICATION NUMBER:

Sign No. 12345 — Sign number - Place on post or structure

10 ISL SCI 1.0
- 1.0 — Transformer rating (kVA)
- SCI — Lighting control type
- ISL — Number and type of fixtures

Do NOT place on standard or structure

ELECTROLIER OR EQUIPMENT IDENTIFICATION NUMBER:

12345 - 15'-0"
- 15'-0" — Mast arm length, if shown. Do not place on standard or structure.
- 12345 — Equipment number - Place on standard or structure. Existing equipment numbers are shown in parenthesis

CONDUIT AND CONDUCTOR IDENTIFICATION:

1½"C, 2#10, 15#14, 2 DLC
- 2#10, 15#14, 2 DLC — Number and size of conductors and cables
- 1½"C — Size of conduit in inches

Ø1, Ø2, Ø2P, etc.	Traffic phase identification for signal faces, detectors and phase diagrams
1 2 3	Project note numbers
A B C	Equipment description, installation or item numbers
1 2 3	Conduit run numbers

SIGNAL AND LIGHTING STANDARD (TYPICAL DESIGNATION):

19A - 3 - 100
- 100 — Wind velocity = 100 mph
- 3 — Case 3 arm loading
- 19A — Standard type
- Standard Plan sheet number
- Detail number or letter

MISCELLANEOUS EQUIPMENT

PROPOSED	EXISTING	
CMS	cms	Changeable message sign
		Closed circuit television camera
		Highway advisory radio pole and antenna
EMS	ems	Extinguishable message sign
M V	m v	Detection device M = Microwave sensor V = Video image sensor

WIRING DIAGRAM LEGEND

P	Pole
CB	Circuit breaker
A	Ampere
V	Volt
M	Metered
UM	Unmetered
NB	Neutral bus
GB	Ground bus
G	Equipment grounding conductor
N	Grounded conductor (Neutral)

External conductor
Conductor or bus
Tie point
Contactor coil
Contactor, Contact NO
Terminal blocks
Contactor, Contact NC
Enclosure bond
Grounding electrode
Circuit breaker
Receptacle

PULL BOXES

PROPOSED	EXISTING	
		Pull box-No. 5 unless otherwise indicated or noted.
3	9A(21)	Pull box-Additional designations or descriptions

3 = No. 3½ pull box
5 = No. 5 pull box
6 = No. 6 pull box
7 = No. 7 (Ceiling pull box)
8 = No. 8 (Pendant soffit pull box)
9 = No. 9 pull box
9A = No. 9A pull box

(C) = Communications pull box
(E) = Pull box with extension
(S) = Sprinkler control pull box
(21) = Anchor bolts and conduit for future installation of Type 21 Standard
(T) = Traffic pull box

VEHICLE DETECTORS

5 J 9 U
- U = Upper, L = Lower
- Slot number in input file
- Input file (I or J)
- Phase

PROPOSED	EXISTING	
		Type A detector loop. Outline of sawcut shown.
		Type B detector loop. Outline of sawcut shown.
		Type C detector loop. Outline of sawcut shown.
		Type D detector loop. Outline of sawcut shown.
		Type E detector loop. Outline of sawcut shown.
		Type Q detector loop. Outline of sawcut shown.
		Magnetic detector
DH	dh	Detector handhole
		Microwave or video detection zone

STATE OF CALIFORNIA
DEPARTMENT OF TRANSPORTATION

ELECTRICAL SYSTEMS (SYMBOLS AND ABBREVIATIONS)

NO SCALE

RSP ES-1C DATED OCTOBER 5, 2007 SUPERCEDES STANDARD PLAN ES-1C DATED MAY 1, 2006 - PAGE 402 OF THE STANDARD PLANS BOOK DATED MAY 2006.

REVISED STANDARD PLAN RSP ES-1C

2006 REVISED STANDARD PLAN RSP ES-1C

7-10-07

DIST	COUNTY	ROUTE	POST MILES TOTAL PROJECT	SHEET NO.	TOTAL SHEETS
12	Ora	5	17.1/17.8	75	81

REGISTERED ELECTRICAL ENGINEER

October 5, 2007
PLANS APPROVAL DATE

REGISTERED PROFESSIONAL ENGINEER
Jeffery G. McRae
No. E14512
Exp. 6-30-08
ELECTRICAL
STATE OF CALIFORNIA

The State of California or its officers or agents shall not be responsible for the accuracy or completeness of electronic copies of this plan sheet.

To accompany plans dated 5-23-11

NOTES-TYPE III SERVICE EQUIPMENT ENCLOSURES:

1. Service equipment enclosure and metering equipment shall meet the requirements of the service utility. The meter area shall have a sealable, lockable, weathertight cover that can be removed without the use of tools.

2. Service equipment enclosures shall be factory wired and conform to NEMA standards.

3. Dimensions of service equipment enclosures shall meet the requirements of the service utility.

4. The dead front panels on Type III service equipment enclosures shall have a continuous stainless steel or aluminum piano hinge. The panel in front of the breakers shall be secured with a latch or captive screws. No live parts shall be mounted on the dead front panel.

5. The exterior door shall have provisions for padlocking. The padlock hole shall be a minimum diameter of 7/16".

6. Enclosures housing transformers of more than one kVA shall have effective screened ventilation louver of not less than 50 square inches. Screen shall be stainless steel No. 304, with a No. 10 size mesh. Framed screen shall be secured with at least four bolts.

7. Fasteners on the exterior of the enclosure shall be vandal-resistant and shall not be removable from the exterior. Exterior screws, nuts, bolts and washers shall be stainless steel.

8. Landing lugs for incoming service conductors shall be compatible with either copper or aluminum conductors sized to suit the conductors shown on the plan. Landing lugs shall be copper or tin-plated aluminum. Neutral bus shall be rated for 125 A and be suitable for copper or aluminum conductors unless otherwise specified. The terminal shall include but not be limited to:

   a) Incoming terminals (landing lugs)
   b) Neutral lugs
   c) Solid neutral terminal strip

9. At least 6 standard single pole circuit breaker spaces, 3/4" nominal, shall be provided for branch circuits. Circuit breaker interiors shall be copper. Interiors of enclosure shall accept plug-in or cable-in/cable-out circuit breakers.

10. Control wiring shall be 600 V, 14 stranded machine tool wire. Where subject to flexing, 19 strand wire shall be used.

11. Main bus shall be rated for 125 A and shall be tin-plated copper.

12. A plastic laminated wiring diagram shall be provided with brass mounting eyelets and attached to the inside of the enclosure and the wiring diagram shall be affixed to the interior with a UL or ETL approved method.

13. An engraved phenolic nameplate on the dead front panel indicating the function of each circuit or device shall be installed with stainless steel rivets or stainless steel screws:

    a) Adjacent to the breaker or device with character size a minimum of 1/8".

    b) At the top of the exterior door panel indicating State system number, voltage level and number of phases with character size a minimum of 3/16".

14. The plan shows the approximate location of devices within the enclosure. Components may be rearranged, however, the "working" clearances within the service equipment enclosure shall be maintained.

15. In unpaved areas a raised portland cement concrete pad 2'-0" x 4" x width of foundation shall be constructed in front of new service equipment enclosure installation. Pad shall be set to elevation of foundation.

16. Foundation shall extend 2" minimum beyond edge of service equipment enclosure.

17. Internal bus, where shown, is typical only. Alternative design of proposed service equipment enclosure shall be submitted to the Engineer for approval.

18. Plug-in circuit breakers may be mounted in the vertical or horizontal position. Cable-in/cable-out circuit breakers shall be mounted in the vertical position.

19. Type III-AF and Type III-BF service equipment enclosures shall have the meter viewing windows located on the front side of the service equipment enclosures.

20. Type III-AR and Type III-BR service equipment enclosures shall be similarly constructed as Type III-AF and Type III-BF respectively, except the meter viewing windows shall be located on the back side of the service equipment enclosures.

21. Minimum clearance shall be required for front and back of service equipment enclosure per National Electrical Code, Article 110.26, "Spaces About Electric Equipment (600 Volts, Nominal, or Less)."

STATE OF CALIFORNIA
DEPARTMENT OF TRANSPORTATION

ELECTRICAL SYSTEMS (SERVICE EQUIPMENT NOTES TYPE III SERIES)

NO SCALE

RSP ES-2C DATED OCTOBER 5, 2007 SUPERCEDES STANDARD PLAN ES-2C
DATED MAY 1, 2006 - PAGE 405 OF THE STANDARD PLANS BOOK DATED MAY 2006.

REVISED STANDARD PLAN RSP ES-2C

2006 REVISED STANDARD PLAN RSP ES-2C

DIST	COUNTY	ROUTE	POST MILES TOTAL PROJECT	SHEET NO.	TOTAL SHEETS
12	Ora	5	17.1/17.8	76	81

REGISTERED ELECTRICAL ENGINEER

October 5, 2007
PLANS APPROVAL DATE

REGISTERED PROFESSIONAL ENGINEER Jeffery G. McRae No. E14512 Exp. 6-30-08 ELECTRICAL STATE OF CALIFORNIA

The State of California or its officers or agents shall not be responsible for the accuracy or completeness of electronic copies of this plan sheet.

To accompany plans dated 5-23-11

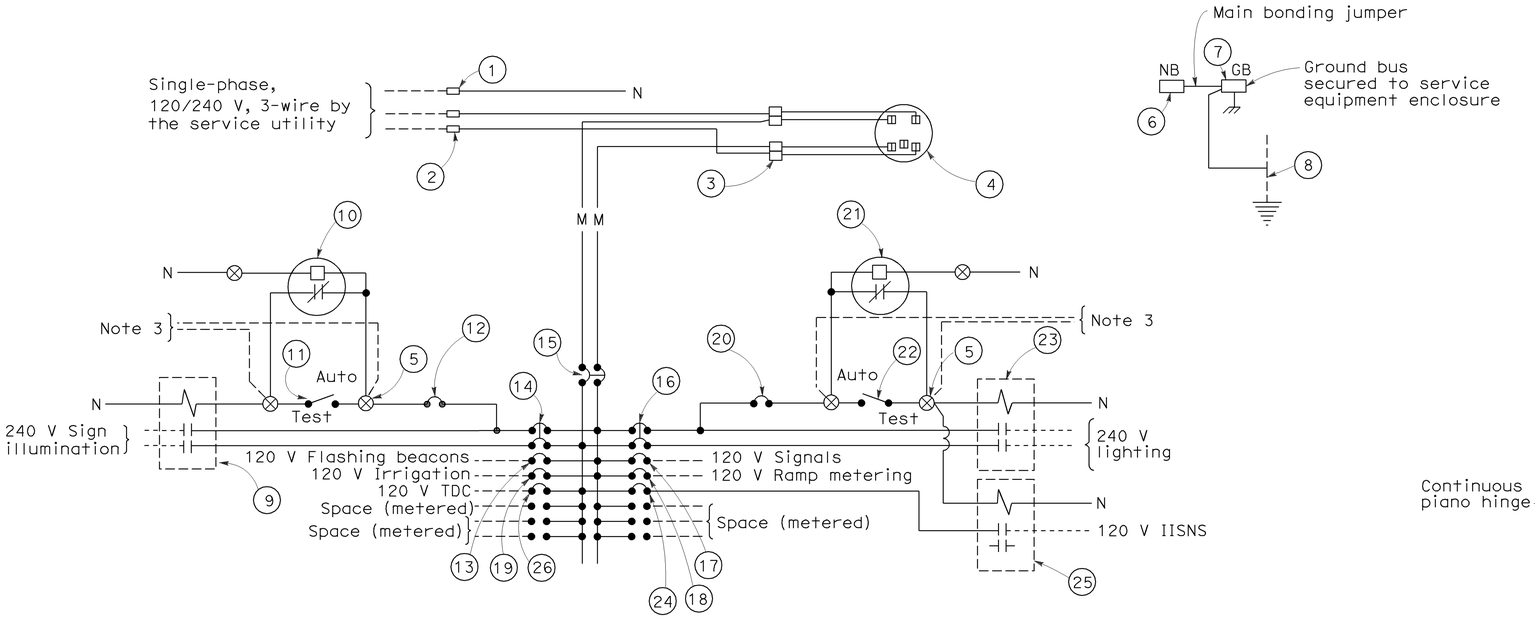

120/240 V SERVICE WIRING DIAGRAM (TYPICAL)

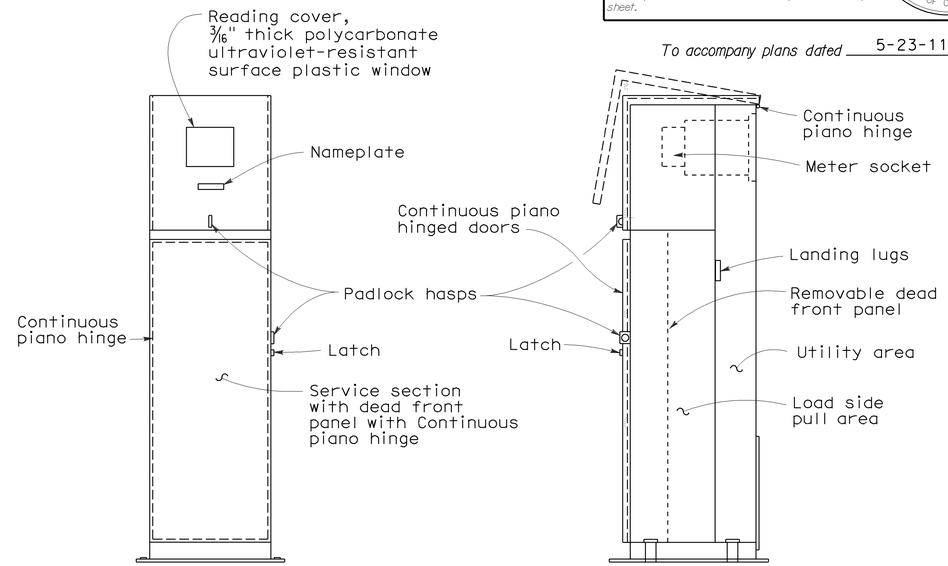

FRONT VIEW

SIDE VIEW

TYPE III-BF SERVICE EQUIPMENT ENCLOSURE WITH PROVISIONS FOR ONE 100 A METER (TYPICAL)

TYPE III-B SERVICE (120/240 V) EQUIPMENT LEGEND		
ITEM No.	COMPONENT	NAME PLATE DESCRIPTION
1	Neutral lug	
2	Landing lug (Note 6)	
3	Test bypass facility	
4	Meter socket and support	
5	Terminal blocks	
6	Neutral bus	
7	Ground bus	
8	Grounding electrode	
9	30 A, 2PNO Contactor	Sign Illumination
10	Photoelectric unit (Note 7)	
11	15 A, 1P, Test switch	Sign Illumination Test Switch
12	15 A, 120 V, 1P, CB	Sign Illumination Control
13	15 A, 120 V, 1P, CB	Flashing Beacon
14	30 A, 240 V, 2P, CB	Sign Illumination
15	100 A, 240 V, 2P, CB	Main Breaker
16	30 A, 240 V, 2P, CB	Lighting
17	50 A, 120 V, 1P, CB	Signals
18	30 A, 120 V, 1P, CB	Ramp Metering
19	20 A, 120 V, 1P, CB	Irrigation
20	15 A, 120 V, 1P, CB	Lighting Control
21	Photoelectric unit (Note 7)	
22	15 A, 1P, Test switch	Lighting Test Switch
23	60 A, 2PNO Contactor	Lighting
24	15 A, 120 V, 1P, CB	IISNS
25	30 A, 2PNO Contactor	IISNS
26	20 A, 120 V, IP, CB	Telephone Demarcation Cabinet

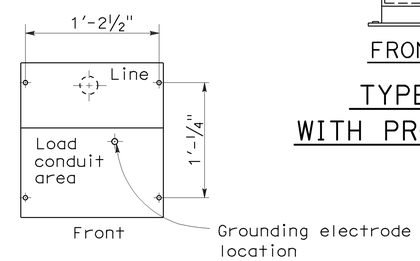

BASE FOR TYPE III-B SERVICE EQUIPMENT ENCLOSURE

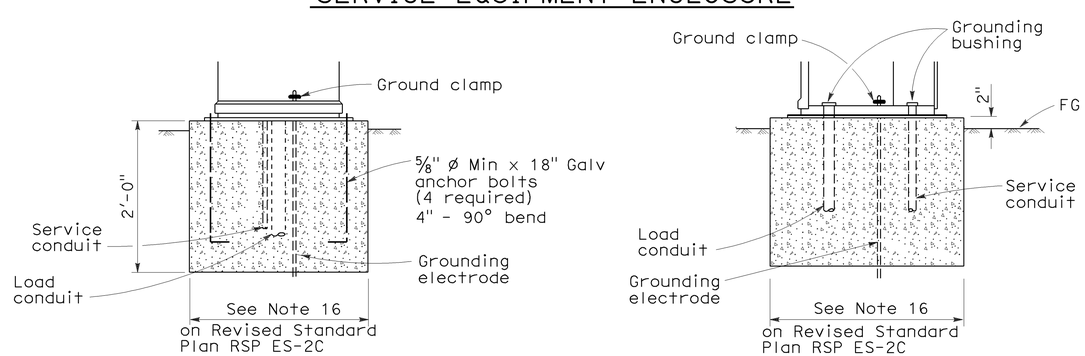

FRONT VIEW

SIDE VIEW

TYPE III-B SERVICE EQUIPMENT ENCLOSURE FOUNDATION DETAILS

NOTES: (FOR SERVICE EQUIPMENT ENCLOSURE)

1. Voltage ratings of service equipment shall conform to the service voltages indicated on the plans.
2. Unless otherwise indicated on the plans, service equipment items shall be provided for each service equipment enclosure as shown.
3. Connect to remote test switch mounted on lighting standards, sign post or structure when required.
4. Items No. 1 and 6 shall be isolated from the service equipment enclosure.
5. Meter sockets shall be 5 clip type.
6. The landing lug shall be suitable for multiple conductors.
7. Type V photoelectric control shall be used unless otherwise indicated on the plans.

STATE OF CALIFORNIA
DEPARTMENT OF TRANSPORTATION

ELECTRICAL SYSTEMS (SERVICE EQUIPMENT AND TYPICAL WIRING DIAGRAM, TYPE III-B SERIES)

NO SCALE

RSP ES-2E DATED OCTOBER 5, 2007 SUPERCEDES STANDARD PLAN ES-2E DATED MAY 1, 2006 - PAGE 407 OF THE STANDARD PLANS BOOK DATED MAY 2006.

REVISED STANDARD PLAN RSP ES-2E

2006 REVISED STANDARD PLAN RSP ES-2E

7-10-07

DIST	COUNTY	ROUTE	POST MILES TOTAL PROJECT	SHEET NO.	TOTAL SHEETS
12	Ora	5	17.1/17.8	77	81

REGISTERED ELECTRICAL ENGINEER

June 6, 2008
PLANS APPROVAL DATE

REGISTERED PROFESSIONAL ENGINEER Jeffery G. McRae No. E14512 Exp. 6-30-10 ELECTRICAL STATE OF CALIFORNIA

The State of California or its officers or agents shall not be responsible for the accuracy or completeness of electronic copies of this plan sheet.

To accompany plans dated 5-23-11

VISORS

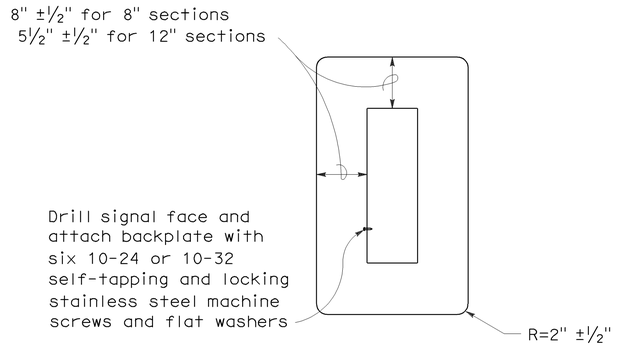

8" AND 12" SECTIONS

BACKPLATE

1/16" minimum thickness
3001-14 aluminum, or plastic when specified

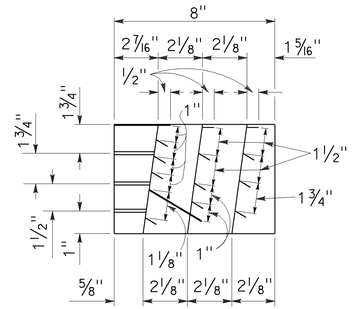

SECTION A-A

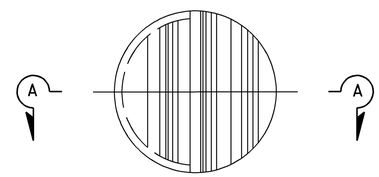

FRONT VIEW

DIRECTIONAL LOUVER

Directional louvers shall be oriented as directed by the Engineer and secured in place with one plated brass machine screw and nut.

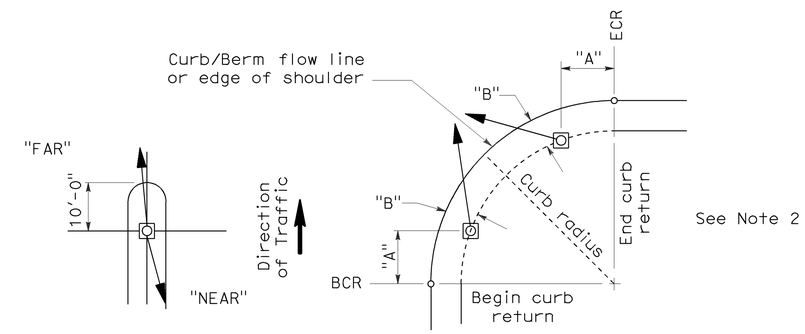

NOTES:

1. Typical signal pole placement unless dimensioned on plans.
2. For "A" and "B" dimensions, see Pole Schedule, or as directed by the Engineer.

SIGNAL STANDARD PLACEMENT DIMENSIONS AND EQUIPMENT LOCATIONS

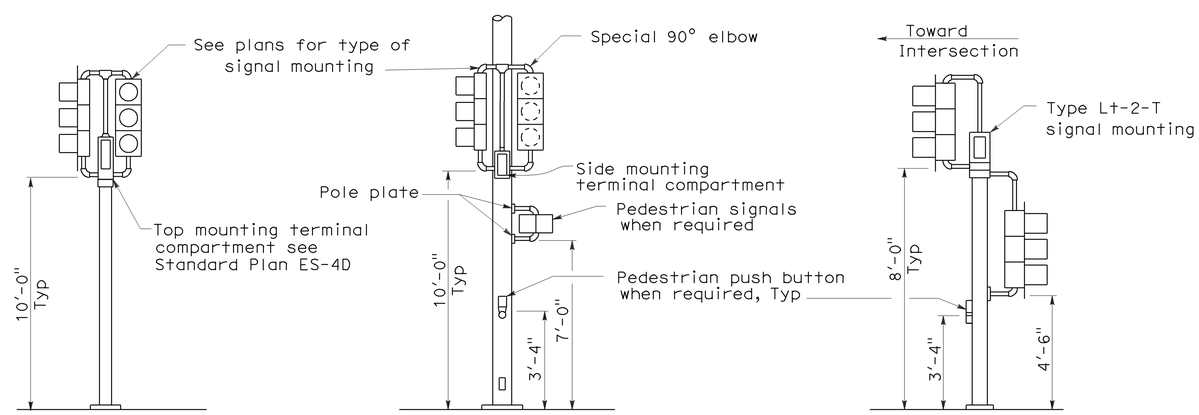

TOP MOUNTED SIGNALS (TV)

Type 1-A, 1-B, 1-C and 1-D standard as indicated on the plans

SIDE MOUNTED SIGNALS (SV AND SP)

Normally used on standards with luminaire or signal mast arm

LEFT TURN LANE SIGNAL

Type 1-A, 1-B, 1-C and 1-D standard as indicated on plans

TYPICAL SIGNAL INSTALLATIONS

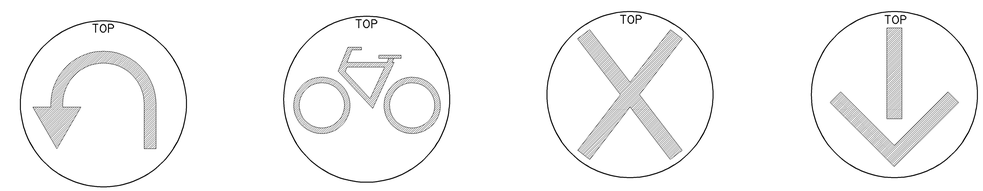

U-TURN SIGNAL FACE | BICYCLE SIGNAL FACE | LANE CONTROL SIGNAL FACE | LANE CONTROL SIGNAL FACE

STATE OF CALIFORNIA
DEPARTMENT OF TRANSPORTATION

ELECTRICAL SYSTEMS (SIGNAL HEADS AND MOUNTINGS)

NO SCALE

RSP ES-4C DATED JUNE 6, 2008 SUPERSEDES STANDARD PLAN ES-4C DATED MAY 1, 2006 - PAGE 420 OF THE STANDARD PLANS BOOK DATED MAY 2006.

REVISED STANDARD PLAN RSP ES-4C

2006 REVISED STANDARD PLAN RSP ES-4C

5-19-08

DIST	COUNTY	ROUTE	POST MILES TOTAL PROJECT	SHEET NO.	TOTAL SHEETS
12	Ora	5	17.1/17.8	78	81

REGISTERED ELECTRICAL ENGINEER

June 6, 2008
PLANS APPROVAL DATE

REGISTERED PROFESSIONAL ENGINEER Jeffery G. McRae No. E14512 Exp. 6-30-10 ELECTRICAL STATE OF CALIFORNIA

The State of California or its officers or agents shall not be responsible for the accuracy or completeness of electronic copies of this plan sheet.

To accompany plans dated 5-23-11

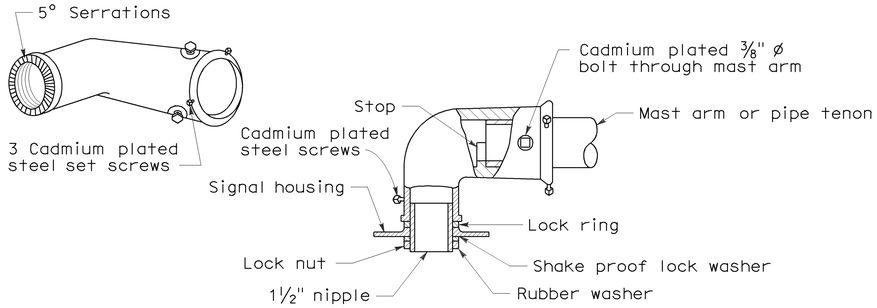

MAST ARM MOUNTING - TYPE "MAT"

For 2 NPS pipe, see Note 1.

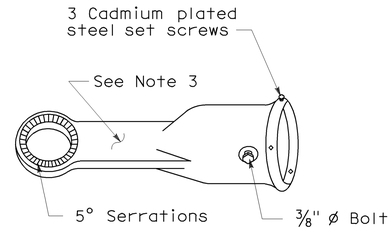

MAST ARM MOUNTING - TYPE "MAS"

For 2 NPS pipe. See Note 1.

SIGNAL SLIP FITTERS

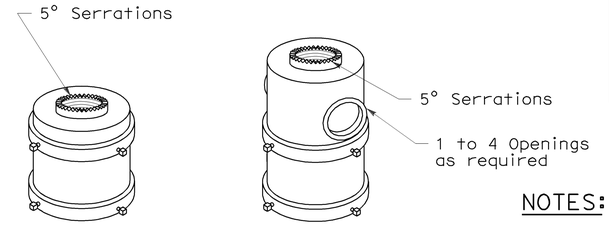

For one mounting For mulitiple mountings

TOP MOUNTINGS

For 4 NPS pipe, see Note 2.

NOTES:

1. After mast arm signal has been plumbed and secured, drill 7/16" hole through mast arm tenon in line with slip fitter hole. Place a cadmium plated ⅜" ø galvanized bolt with washer under bolt head through hole and secure with washer, nut, and locknut. Seal openings between mast arm mountings and mast arm with mastic.
2. (a) Threaded top mounted slip fitter openings shall be 1½ NPS.
   (b) Serrations in fittings shall match those on bottom of signal heads or in lock ring.
   (c) Top opening shall be offset when backplate is used.
3. Wireway shall have a cross section area of 0.95 square inch minimum. Minimum width of ½".

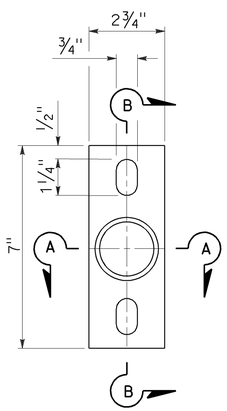

POLE PLATE

For side mountings

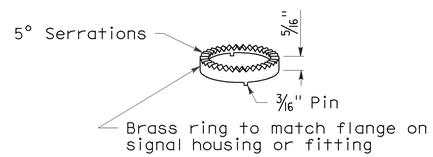

LOCK RING

Use where locking ring is not integral with signal housing or fitting.

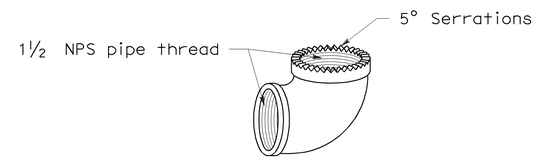

SPECIAL 90° ELBOW

One for each signal head, except those with special slip fitter mounting

MISCELLANEOUS MOUNTING HARDWARE

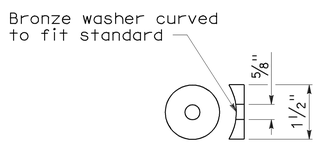

DETAIL "C"

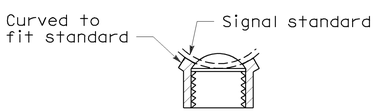

SECTION A-A

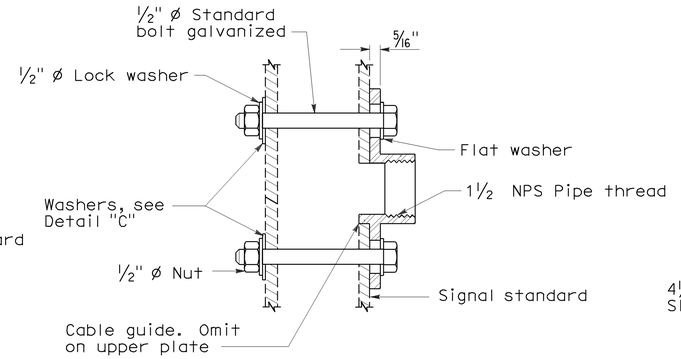

SECTION B-B

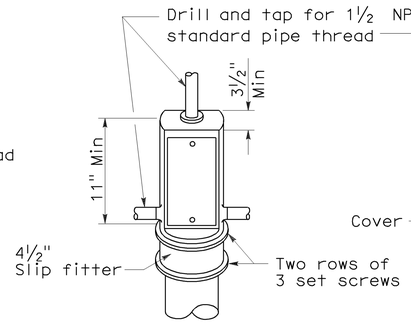

TOP MOUNTING

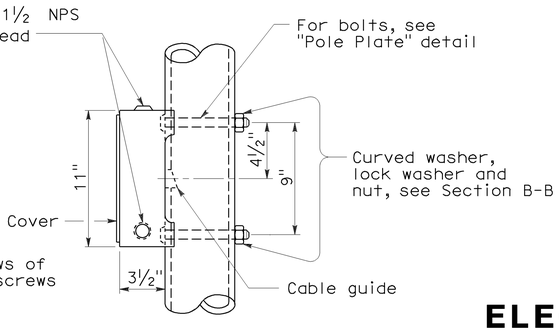

SIDE MOUNTING

TERMINAL COMPARTMENTS

STATE OF CALIFORNIA
DEPARTMENT OF TRANSPORTATION

ELECTRICAL SYSTEMS (SIGNAL HEADS AND MOUNTINGS)

NO SCALE

RSP ES-4D DATED June 6, 2008 SUPERSEDES STANDARD PLAN ES-4D
DATED MAY 1, 2006 - PAGE 421 OF THE STANDARD PLANS BOOK DATED MAY 2006.

REVISED STANDARD PLAN RSP ES-4D

2006 REVISED STANDARD PLAN RSP ES-4D

5-19-08

DIST	COUNTY	ROUTE	POST MILES TOTAL PROJECT	SHEET NO.	TOTAL SHEETS
12	Ora	5	17.1/17.8	79	81

REGISTERED ELECTRICAL ENGINEER

October 5, 2007
PLANS APPROVAL DATE

REGISTERED PROFESSIONAL ENGINEER Jeffery G. McRae No. E14512 Exp. 6-30-08 ELECTRICAL STATE OF CALIFORNIA

The State of California or its officers or agents shall not be responsible for the accuracy or completeness of electronic copies of this plan sheet.

To accompany plans dated 5-23-11

LOOP INSTALLATION PROCEDURE

1. Loops shall be centered in lanes.
2. Saw slots in pavement for loop conductors as shown in details.
3. Distance between side of loop and a lead-in saw cut from adjacent detectors shall be 2'-0" minimum. Distance between lead-in saw cuts shall be 6" minimum.
4. Bottom of saw slot shall be smooth with no sharp edges.
5. Slots shall be washed until clean, blown out and thoroughly dried before installing loop conductors.
6. Adjacent loops on the same sensor unit channel shall be wound in opposite directions.
7. Identify and tag loop circuit pairs in the pull box with loop number, start (S) and finish (F) of conductor. Identify and tag lead-in-cable with sensor number and phase.
8. Install loop conductor in slot using a 3/16" to 1/4" thick wood paddle. Hold loop conductors with wood paddles (at the bottom of the sawed slot) during sealant placement.
9. No more than 2 twisted pairs shall be installed in one sawed slot.
10. Allow additional 5'-0" of slack length of conductor for the lead-in run to pull box.
11. The additional length of each conductor for each loop shall be twisted together into a pair (6 turns per 3'-4" minimum) before being placed in the slot and conduit leading to pull box.
12. Test each loop circuit for continuity, circuit resistance and insulation resistance at the pull box before filling slots.
13. Fill slots as shown in details.
14. Splice loop conductors to lead-in-cable. Splices shall be soldered.
15. End of lead-in-cable and Type 2 loop conductor shall be waterproofed prior to installing in conduit to prevent moisture from entering the cable.
16. Lead-in-cable shall not be spliced between the pull box and the controller cabinet terminals.
17. Test each loop circuit for continuity, circuit resistance and insulation resistance at the controller cabinet location.
18. Where loop conductors are not to be spliced to a lead-in-cable, the ends of the conductors shall be taped and waterproofed with electrical insulating coating.

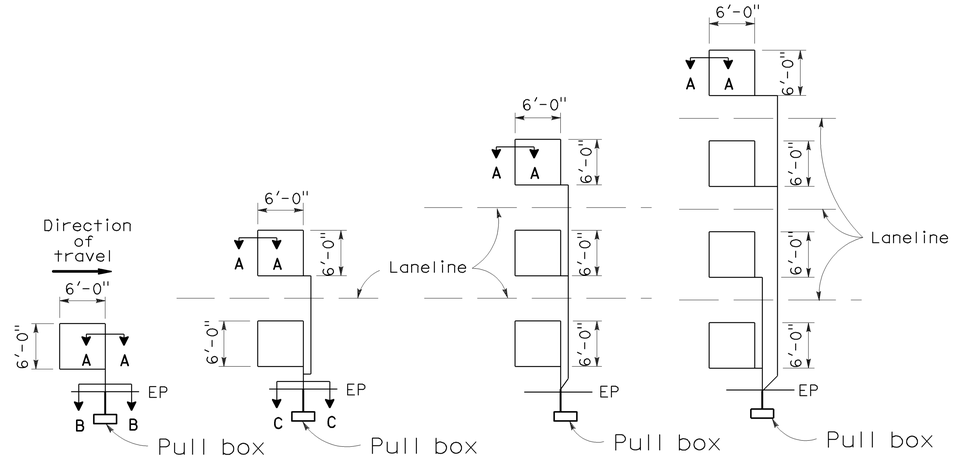

TYPE 1A INSTALLATION | TYPE 2A INSTALLATION | TYPE 3A INSTALLATION | TYPE 4A INSTALLATION

SAWCUT DETAILS

(Type A loop detector configurations illustrated)

1. 1A thru 4A = 1 Type A loop configuration in each lane.
2. 1B thru 4B = 1 Type B loop configuration in each lane.
3. 1C = 1 Type C loop configuration entering lanes as required.
4. 1D thru 4D = 1 Type D loop configuration in each lane.
5. 1E thru 4E = 1 Type E loop configuration in each lane.
6. 1Q thru 4Q = 1 Type Q loop configuration in each lane. (Use Type A, B, C, D, E or Q loop detector configurations only when specified or shown on plans)

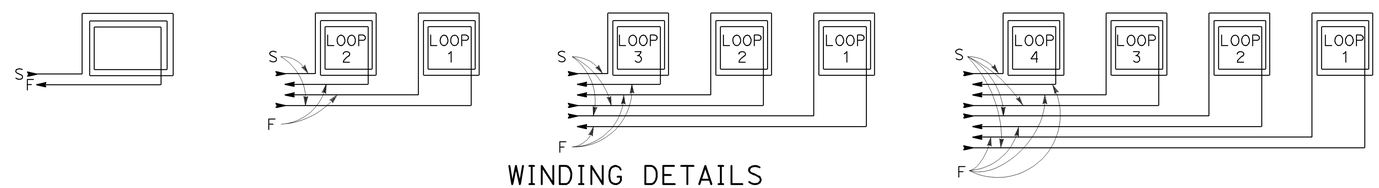

WINDING DETAILS

See Notes 6 and 7

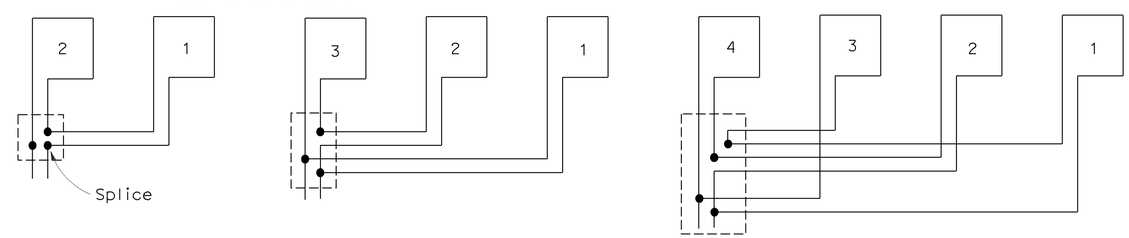

TYPICAL LOOP CONNECTIONS

(Dashed lines represent the pull box)

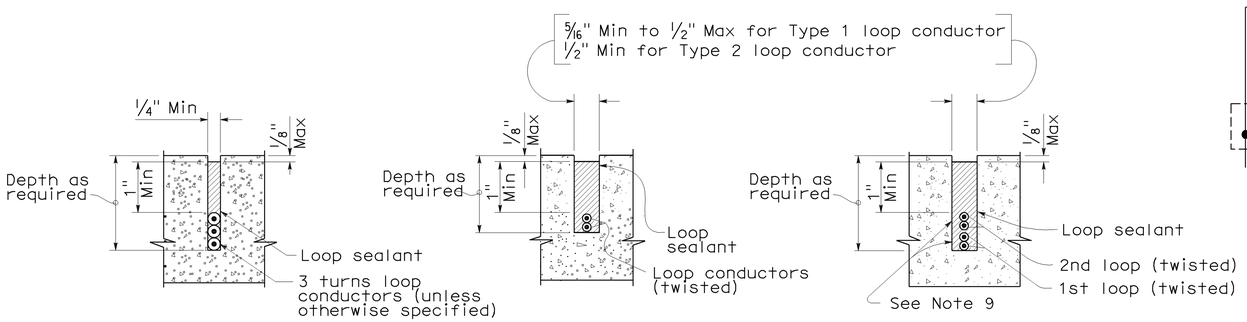

SECTION A-A | SECTION B-B | SECTION C-C

SLOT DETAILS - TYPE 1 AND TYPE 2 LOOP CONDUCTOR

STATE OF CALIFORNIA
DEPARTMENT OF TRANSPORTATION

ELECTRICAL SYSTEMS (DETECTORS)

NO SCALE

RSP ES-5A DATED OCTOBER 5, 2007 SUPERCEDES STANDARD PLAN ES-5A DATED MAY 1, 2006 - PAGE 423 OF THE STANDARD PLANS BOOK DATED MAY 2006.

REVISED STANDARD PLAN RSP ES-5A

2006 REVISED STANDARD PLAN RSP ES-5A

8-17-07

DIST	COUNTY	ROUTE	POST MILES TOTAL PROJECT	SHEET NO.	TOTAL SHEETS
12	Ora	5	17.1/17.8	80	81

REGISTERED CIVIL ENGINEER

October 5, 2007
PLANS APPROVAL DATE

REGISTERED PROFESSIONAL ENGINEER Stanley P. Johnson No. C57793 Exp. 3-31-08 CIVIL STATE OF CALIFORNIA

The State of California or its officers or agents shall not be responsible for the accuracy or completeness of electronic copies of this plan sheet.

To accompany plans dated 5-23-11

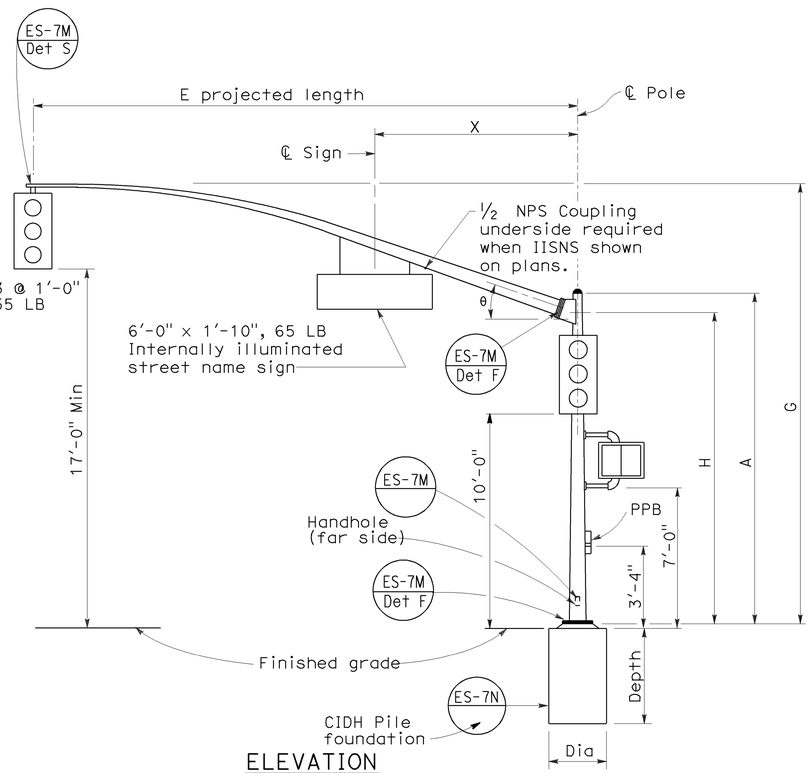

ELEVATION

TYPE 16-2-100, 18-2-100

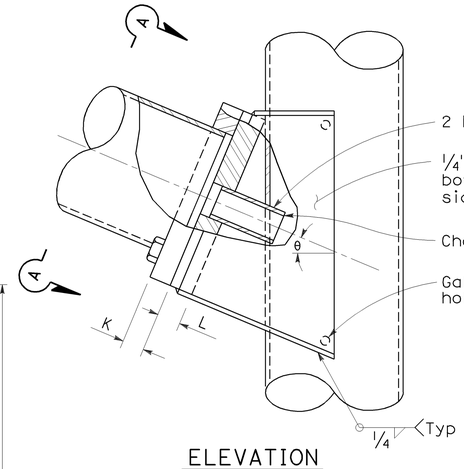

ELEVATION

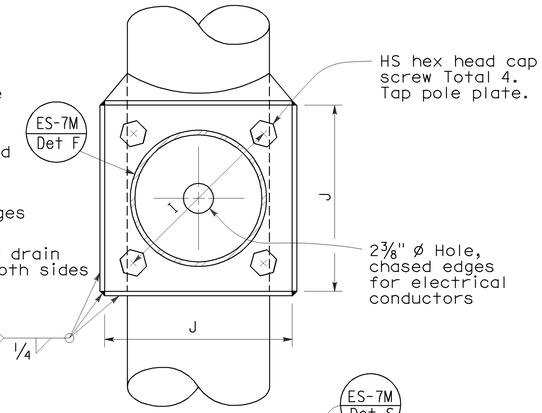

VIEW A-A

SIGNAL ARM CONNECTION DETAILS

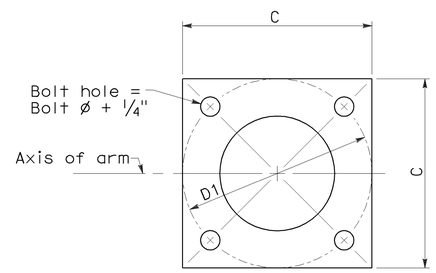

BASE PLATE

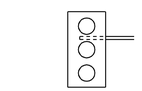

Required for Type 17-2-100 Type 17A-2-100

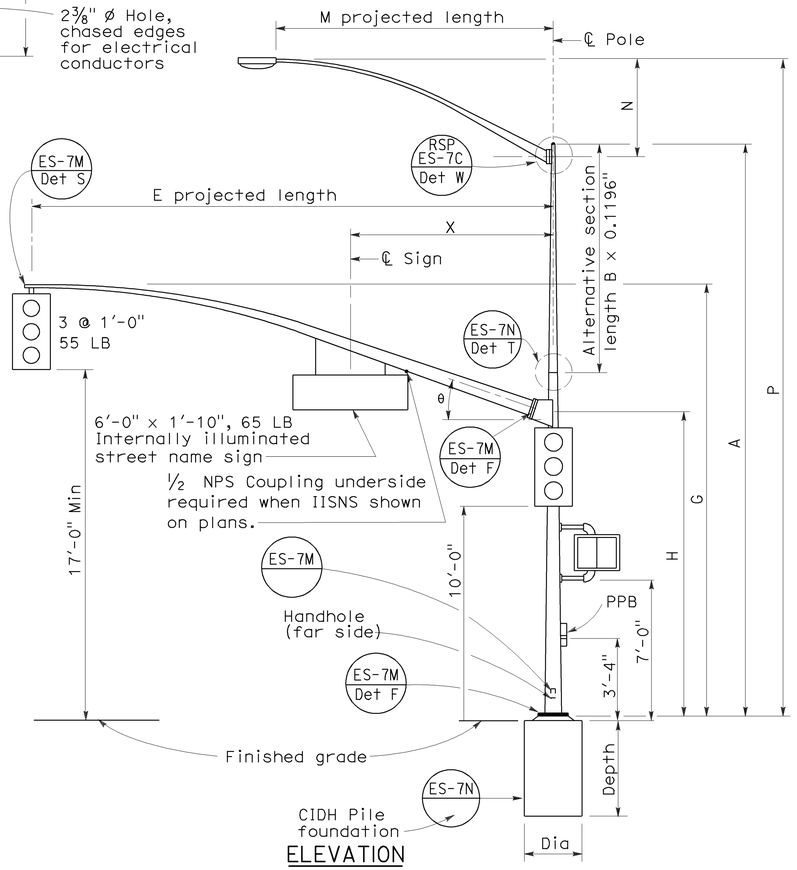

ELEVATION

TYPE 17-2-100, 17A-2-100, 19-2-100, 19A-2-100

SIGNAL ARM DATA											
E Projected Length	G Mounting Height	H	Min OD At Pole	Thickness	I Bolt Circle	HS Cap Screws	J Plate Size	K Arm ℙ Thickness	L Pole ℙ Thickness	θ	X Max
15'-0"	21'-8"±	17'-6"	6⅝"	0.1793"	12"	1¼"-7NC-3"	1'-0"	1¼"	1½"	23°	10'-6"
20'-0"	21'-8"±		6⅝"								
25'-0"	22'-8"±	16'-0"	7 5/16"								
30'-0"	23'-0"±		8"								

LUMINAIRE ARM DATA					
M Projected Length	N Rise	Min OD at Pole	Thickness	P Mounting Height 30'-0" Pole	P Mounting Height 35'-0" Pole
6'-0"	2'-0"±	3¼"	0.1196"	31'-6"±	36'-6"±
8'-0"	2'-6"±	3½"		32'-0"±	37'-0"±
10'-0"	3'-3"±	3⅞"		32'-9"±	37'-9"±
12'-0"	4'-3"±			33'-9"±	38'-9"±
15'-0"	4'-9"±	4¼"		34'-3"±	39'-3"±

Pole Type	Load Case	Wind Velocity mph	POLE DATA: A Height	Min OD Base	Min OD Top	Thickness	Alternative Section B Length	Alternative Section Bottom	Alternative Section Top	BASE PLATE DATA: C	D1 Bolt Circle	Thickness	Anchor Bolts Size	Luminaire Arm	Signal Arm	CIDH PILE FOUNDATION: Diameter	Depth	Reinforced
16-2-100	2	100	18'-6"	10¾"	8¼"	0.1793"	None			1'-6"	1'-5½"	1½"	2"Ø x 42" x 6"	None	15'-0", 20'-0"	2'-6"	7'-2"	Yes
17-2-100			30'-0"		6⅝"		10'-0"	8"	6⅝"					6'-15' [12'-0"]				
17A-2-100			35'-0"		5 15/16"		15'-0"		5 15/16"					6'-15' [15'-0"]				
18-2-100			17'-0"		8 7/16"		None							None	25'-0", 30'-0"			
19-2-100			30'-0"		6⅝"	0.2391"	10'-0"	8"	6⅝"					6'-15' [12'-0"]				
19A-2-100			35'-0"		5 15/16"		15'-0"		5 5/16"					6'-15' [15'-0"]				

☐ Indicates arm length to be used unless otherwise noted on plans.

STATE OF CALIFORNIA
DEPARTMENT OF TRANSPORTATION

ELECTRICAL SYSTEMS (SIGNAL AND LIGHTING STANDARD CASE 2 ARM LOADING WIND VELOCITY=100 MPH ARM LENGTHS 15' TO 30')

NO SCALE

RSP ES-7D DATED OCTOBER 5, 2007 SUPERCEDES STANDARD PLAN ES-7D DATED MAY 1, 2006 - PAGE 440 OF THE STANDARD PLANS BOOK DATED MAY 2006.

REVISED STANDARD PLAN RSP ES-7D

2006 REVISED STANDARD PLAN RSP ES-7D

7-10-07

DIST	COUNTY	ROUTE	POST MILES TOTAL PROJECT	SHEET NO.	TOTAL SHEETS
12	Ora	5	17.1/17.8	81	81

REGISTERED CIVIL ENGINEER

October 5, 2007
PLANS APPROVAL DATE

REGISTERED PROFESSIONAL ENGINEER Stanley P. Johnson No. C57793 Exp. 3-31-08 CIVIL STATE OF CALIFORNIA

The State of California or its officers or agents shall not be responsible for the accuracy or completeness of electronic copies of this plan sheet.

To accompany plans dated 5-23-11

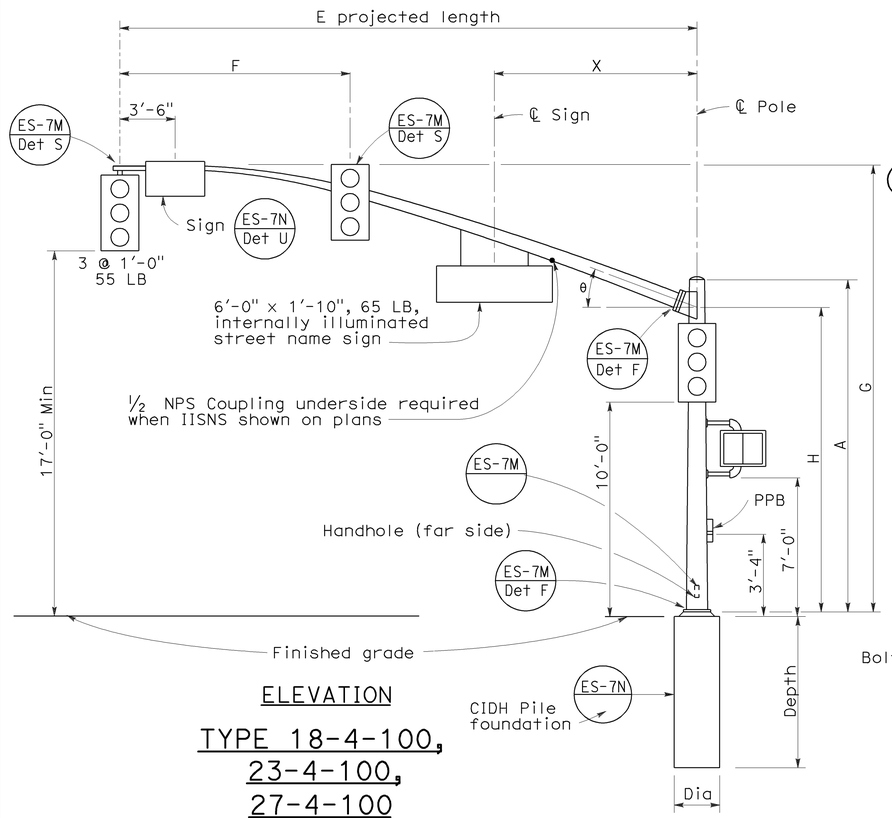

ELEVATION

TYPE 18-4-100, 23-4-100, 27-4-100

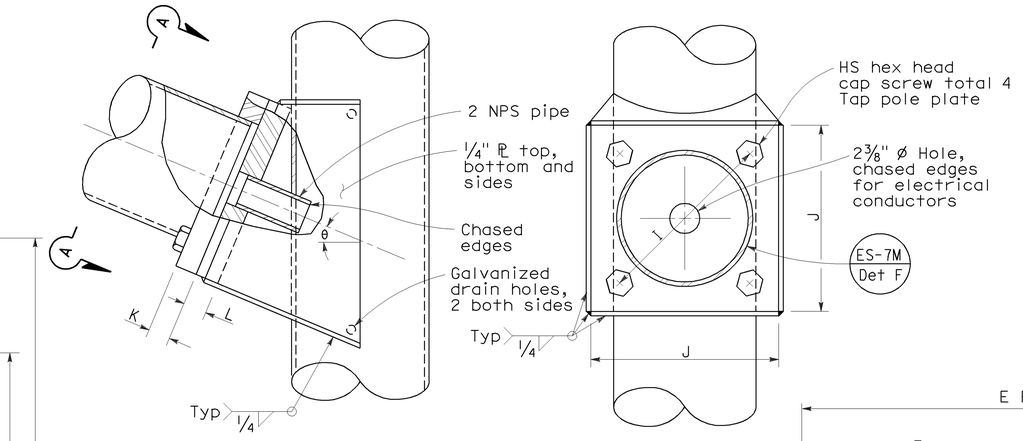

ELEVATION VIEW A-A

SIGNAL ARM CONNECTION DETAILS

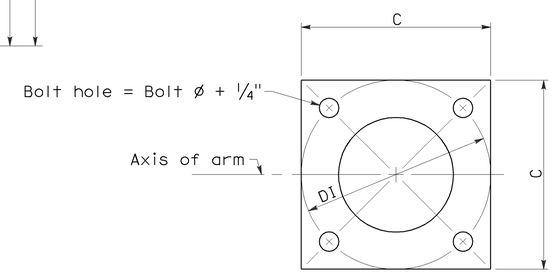

BASE PLATE

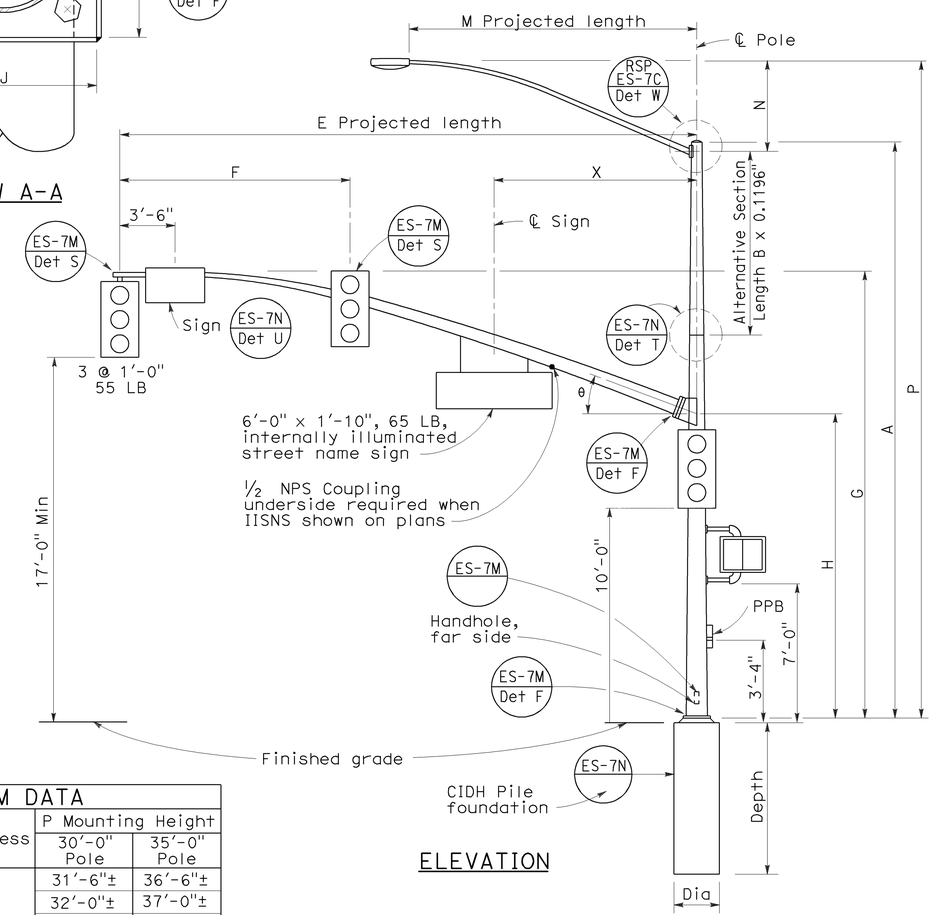

ELEVATION

TYPE 19-4-100, 19A-4-100, 24-4-100, 24A-4-100, 26-4-100, 26A-4-100

SIGNAL ARM DATA

E Projected Length	F Min Spacing	G Mounting Height	H	Min OD at Pole	Thickness	I Bolt Circle	HS Cap Screws	J Plate Size	K Arm PL Thickness	L Pole PL Thickness	θ	X Max
25'-0"	10'-0"	22'-8"±	16'-0"	7 5/16"	0.2391"	12"	1¼"-7NC-3"	1'-0"	1¼"	1½"	23°	10'-6"
30'-0"	12'-0"	23'-0"±		8"								
35'-0"	14'-0"			8 11/16"		13½"		1'-1½"	1½"	1¾"	21°	
40'-0"	15'-0"			9⅜"							15°	13'-0"
45'-0"		23'-8"±		10¼"								

LUMINAIRE ARM DATA

M Projected Length	N Rise	Min OD at Pole	Thickness	P Mounting Height 30'-0" Pole	P Mounting Height 35'-0" Pole
6'-0"	2'-0"±	3¼"	0.1196"	31'-6"±	36'-6"±
8'-0"	2'-6"±	3½"		32'-0"±	37'-0"±
10'-0"	3'-3"±	3⅞"		32'-9"±	37'-9"±
12'-0"	4'-3"±			33'-9"±	38'-9"±
15'-0"	4'-9"±	4¼"		34'-3"±	39'-3"±

Pole Type	Load Case	Wind Velocity mph	POLE DATA A Height	Min OD Base	Min OD Top	Thickness	Alternative Section B Length	Alternative Section Bottom	Alternative Section Top	BASE PLATE DATA C	DI Bolt Circle	Thickness	Anchor Bolts Size	Luminaire Arm	Signal Arm	CIDH PILE FOUNDATION Dia	Depth	Reinforced
18-4-100	4	100	17'-0"	12"	9"	0.2391"	None			1'-6"	1'-6"	1½"	2" Ø x 42" x 6"	None	25'-0", [30'-0"]	3'-0"	9'-0"	Yes
19-4-100			30'-0"		8"		10'-0"	9⅜"	8"					6'-15' [12'-0"]				
19A-4-100			35'-0"		7 5/16"		15'-0'		7 5/16"					6'-15' [15'-0"]				
23-4-100			17'-0"		9"		None							None	35'-0"			
24-4-100			30'-0"		8"		10'-0"	9⅜"	8"					6'-15' [12'-0"]				
24A-4-100			35'-0"		7 5/16"		15'-0"		7 5/16"					6'-15' [15'-0"]				
26-4-100			30'-0"	12½"	8"	0.3125"	10'-0"	9¾"	8⅜"					6'-15' [12'-0"]	40'-0", [45'-0"]			
26A-4-100			35'-0"		7 5/16"		15'-0"		7 11/16"					6'-15' [15'-0"]				
27-4-100			17'-0"		9¾"		None							None				

☐ Indicates arm length to be used unless otherwise noted on plans.

STATE OF CALIFORNIA
DEPARTMENT OF TRANSPORTATION

ELECTRICAL SYSTEMS (SIGNAL AND LIGHTING STANDARD CASE 4 ARM LOADING WIND VELOCITY=100 MPH ARM LENGTHS 25' TO 45')

NO SCALE

RSP ES-7F DATED OCTOBER 5, 2007 SUPERCEDES RSP ES-7F DATED NOVEMBER 17, 2006 AND STANDARD PLAN ES-7F DATED MAY 1, 2006 - PAGE 442 OF THE STANDARD PLANS BOOK DATED MAY 2006.

REVISED STANDARD PLAN RSP ES-7F

2006 REVISED STANDARD PLAN RSP ES-7F