Dist	COUNTY	ROUTE	POST MILES TOTAL PROJECT	SHEET No.	TOTAL SHEETS
12	Ora	91	R9.2/R15.9	1	86

STATE OF CALIFORNIA

DEPARTMENT OF TRANSPORTATION

HSNH-P091(129)E

PROJECT PLANS FOR CONSTRUCTION ON

STATE HIGHWAY

IN ORANGE COUNTY
IN ANAHEIM
FROM ROUTE 55/91 SEPARATION TO ROUTE 91/241 SEPARATION

TO BE SUPPLEMENTED BY STANDARD PLANS DATED MAY 2006

INDEX OF PLANS

SHEET No.	DESCRIPTION
1	TITLE AND LOCATION MAP
2-3	TYPICAL CROSS SECTIONS
4-32	LAYOUTS
33	CONSTRUCTION DETAILS
34	CONSTRUCTION AREA SIGNS
35-43	TRAFFIC HANDLING PLANS
44-45	PAVEMENT DELINEATION PLANS
46-52	SIGN PLANS
53	SUMMARY OF QUANTITIES
54-67	ELECTRICAL PLANS
68-84	REVISED AND NEW STANDARD PLANS

STRUCTURE PLANS

85-86	ROUTE 91 BRIDGES (DECK OVERLAY AND JOINT SEALS)

THE STANDARD PLANS LIST APPLICABLE TO THIS CONTRACT IS INCLUDED IN THE NOTICE TO BIDDERS AND SPECIAL PROVISIONS BOOK.

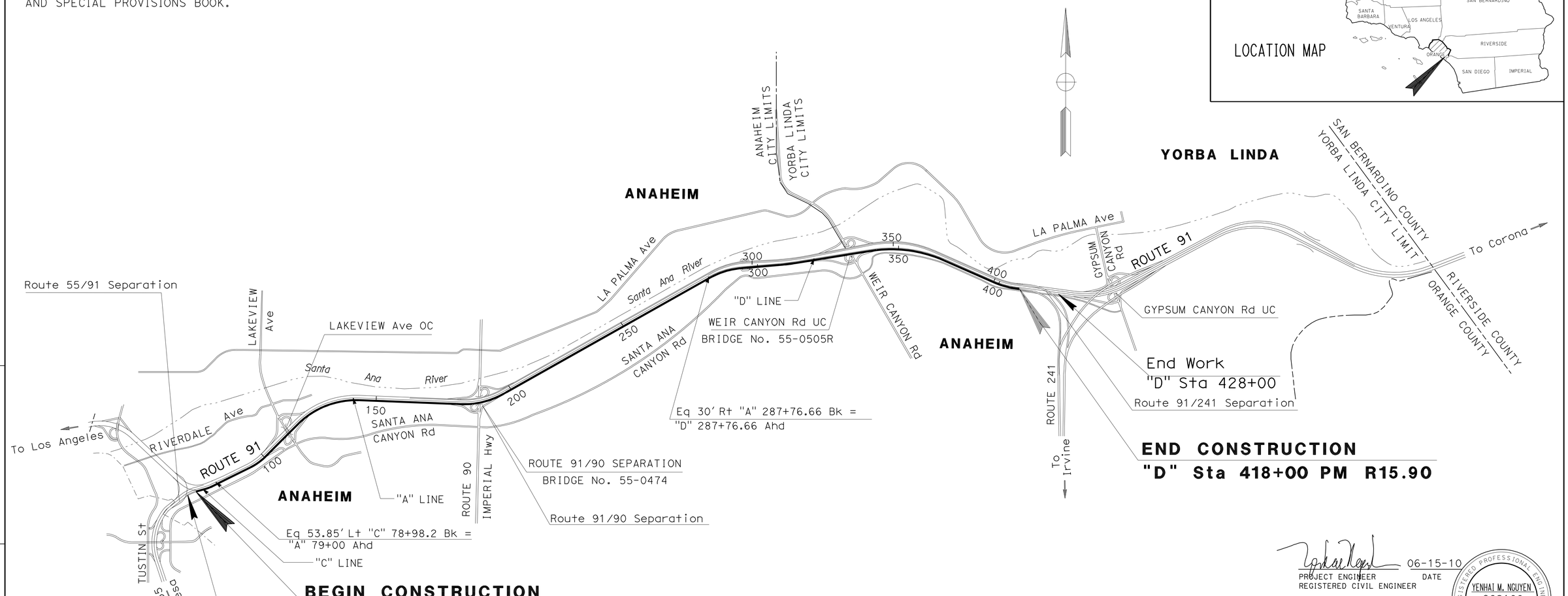

THE CONTRACTOR SHALL POSSESS THE CLASS (OR CLASSES) OF LICENSE AS SPECIFIED IN THE "NOTICE TO BIDDERS."

NO SCALE

PROJECT MANAGER: LEO CHEN

DESIGN ENGINEER: YENHAI M. NGUYEN

06-15-10
PROJECT ENGINEER — DATE
REGISTERED CIVIL ENGINEER

July 26, 2010
PLANS APPROVAL DATE

REGISTERED PROFESSIONAL ENGINEER — YENHAI M. NGUYEN — No. C62100 — Exp. 9/30/11 — CIVIL — STATE OF CALIFORNIA

THE STATE OF CALIFORNIA OR ITS OFFICERS OR AGENTS SHALL NOT BE RESPONSIBLE FOR THE ACCURACY OR COMPLETENESS OF SCANNED COPIES OF THIS PLAN SHEET.

CONTRACT No.	12-0K6804
PROJECT ID	1200000367

LAST REVISION 04-14-10

DATE PLOTTED => 29-SEP-2010
TIME PLOTTED => 11:32

Dist	COUNTY	ROUTE	POST MILES TOTAL PROJECT	SHEET No.	TOTAL SHEETS
12	Ora	91	R9.2/R15.9	2	86

REGISTERED CIVIL ENGINEER 06-15-10 DATE

7-26-10
PLANS APPROVAL DATE

REGISTERED PROFESSIONAL ENGINEER
YENHAI M. NGUYEN
No. C62100
Exp. 9/30/11
CIVIL
STATE OF CALIFORNIA

THE STATE OF CALIFORNIA OR ITS OFFICERS OR AGENTS SHALL NOT BE RESPONSIBLE FOR THE ACCURACY OR COMPLETENESS OF SCANNED COPIES OF THIS PLAN SHEET.

NOTES:

1. DIMENSIONS OF THE STRUCTURAL SECTIONS ARE SUBJECT TO TOLERANCES SPECIFIED IN THE STANDARD SPECIFICATIONS.
2. SUPERELEVATON AS SHOWN OR AS DIRECTED BY THE ENGINEER.
3. FOR DIKE AND MBGR LOCATIONS, SEE LAYOUTS.
4. EXISTING OCTA EXPRESS LANE YELLOW THERMOPLASTIC BUFFER SHALL REMAIN IN PLACE
5. THE GRINDING AND/OR GROOVING OF EXISTING CONCRETE PAVEMENT SHALL STOP WITHIN 4" OF OCTA EXPRESS LANE YELLOW THERMOPLASTIC BUFFER.
6. EXISTING CONCRETE PAVEMENT SHALL BE GROUND FIRST AND THEN GROOVED.

PAVEMENT STRUCTURAL SECTIONS:

1 — GROOVE Exist Conc Pvmt
GRIND Exist Conc Pvmt

2 — GROOVE Exist Conc Pvmt

ABBREVIATIONS:

OCTA: Orange County Transportation Authority

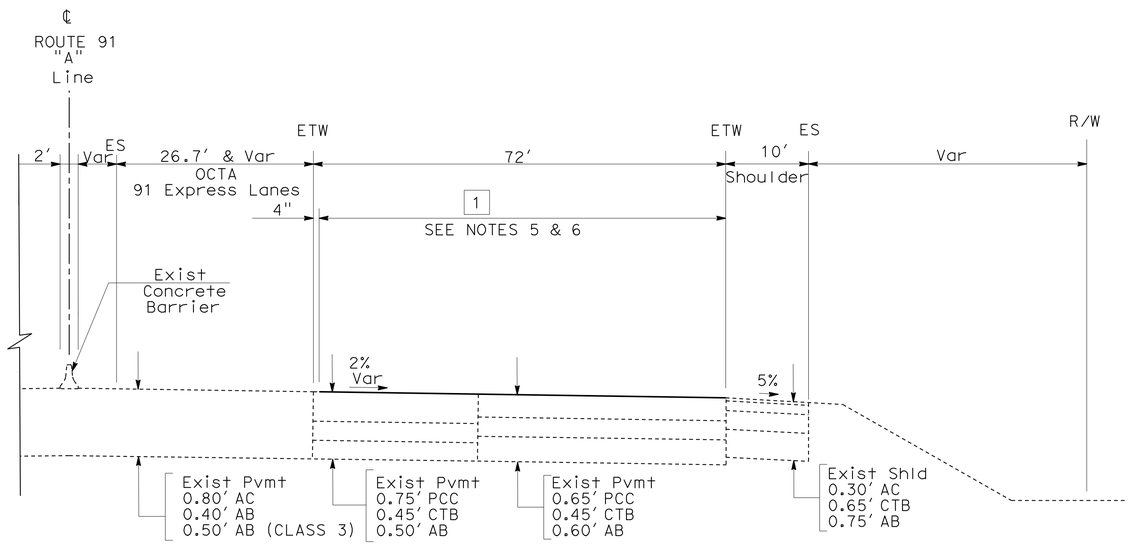

EASTBOUND

"A" 79+00 TO "A" 95+55.45

ROUTE 91

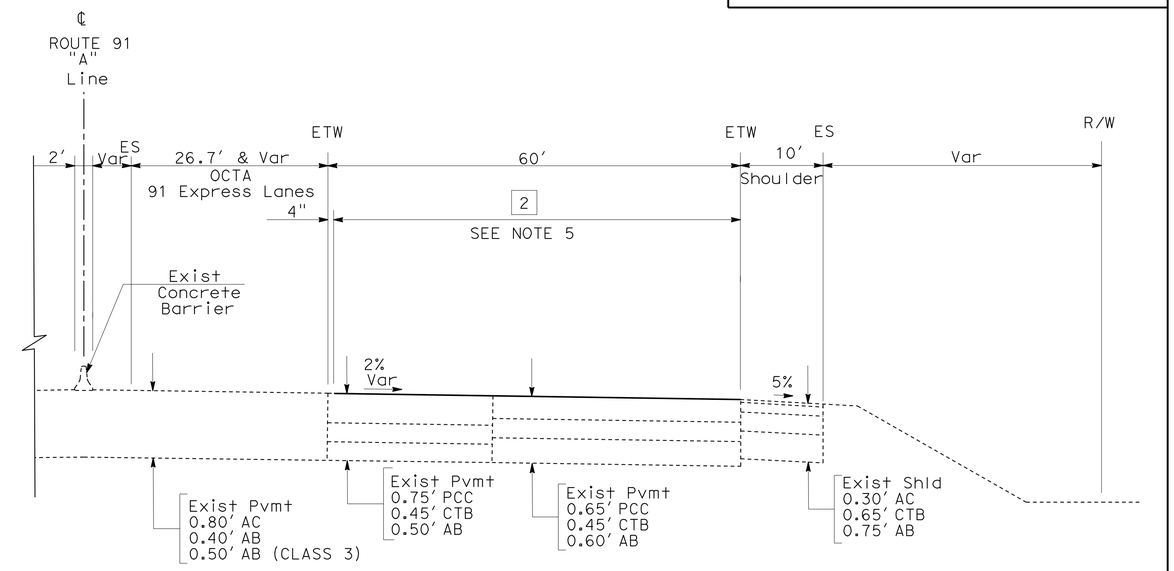

EASTBOUND

"A" 112+48.85 TO "A" 176+79.2

ROUTE 91

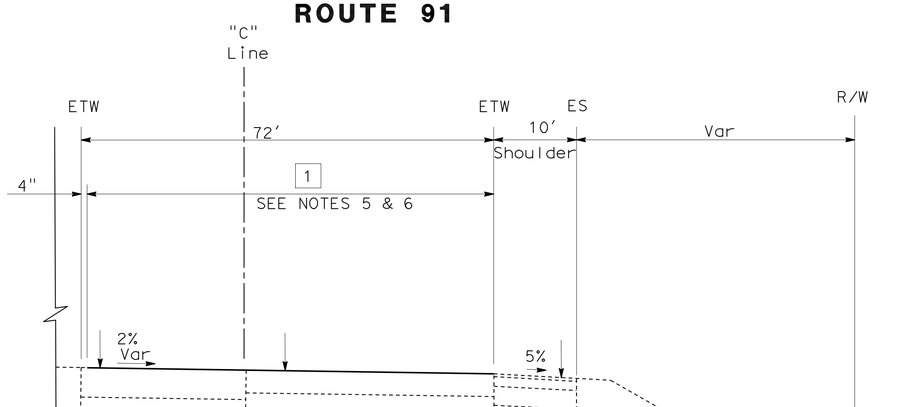

EASTBOUND

"C" 71+50 TO "C" 78+98.2

ROUTE 91

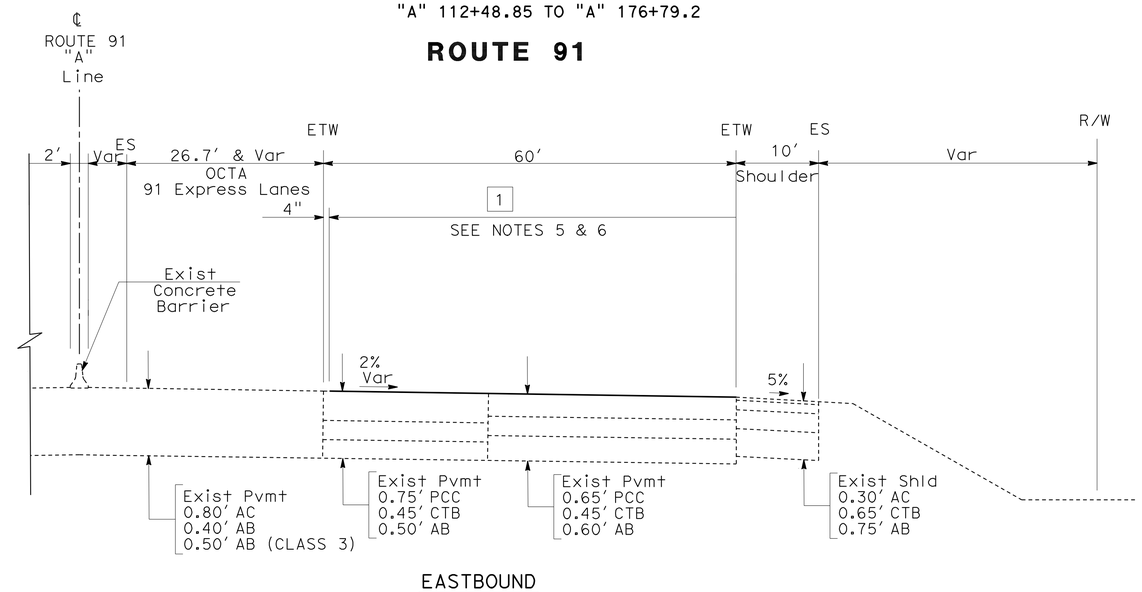

EASTBOUND

"A" 95+55.45 TO "A" 112+48.85

ROUTE 91

TYPICAL CROSS SECTIONS

NO SCALE

X-1

STATE OF CALIFORNIA - DEPARTMENT OF TRANSPORTATION
Caltrans® DESIGN BRANCH B

FUNCTIONAL SUPERVISOR: LISA ALVISO
CALCULATED-DESIGNED BY: YENHAI NGUYEN
CHECKED BY: KEITH TA
REVISED BY: Y. NGUYEN
DATE REVISED: 04-14-10

LAST REVISION 04-14-10 | DATE PLOTTED => 27-JUL-2010 | TIME PLOTTED => 15:51

Dist	COUNTY	ROUTE	POST MILES TOTAL PROJECT	SHEET No.	TOTAL SHEETS
12	Ora	91	R9.2/R15.9	3	86

REGISTERED CIVIL ENGINEER 06-15-10 DATE

7-26-10
PLANS APPROVAL DATE

REGISTERED PROFESSIONAL ENGINEER
YENHAI M. NGUYEN
No. C62100
Exp. 9/30/11
CIVIL
STATE OF CALIFORNIA

THE STATE OF CALIFORNIA OR ITS OFFICERS OR AGENTS SHALL NOT BE RESPONSIBLE FOR THE ACCURACY OR COMPLETENESS OF SCANNED COPIES OF THIS PLAN SHEET.

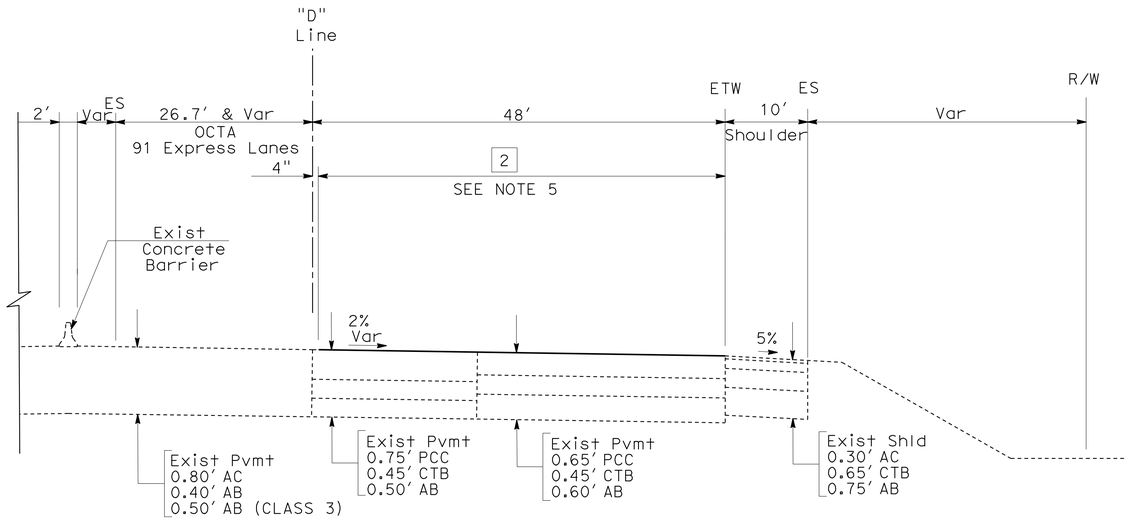

EASTBOUND

"D" 287+76.66 TO "D" 341+71.24
"D" 343+27.65 TO "D" 354+88.2
"D" 386+11 TO "D" 418+00

ROUTE 91

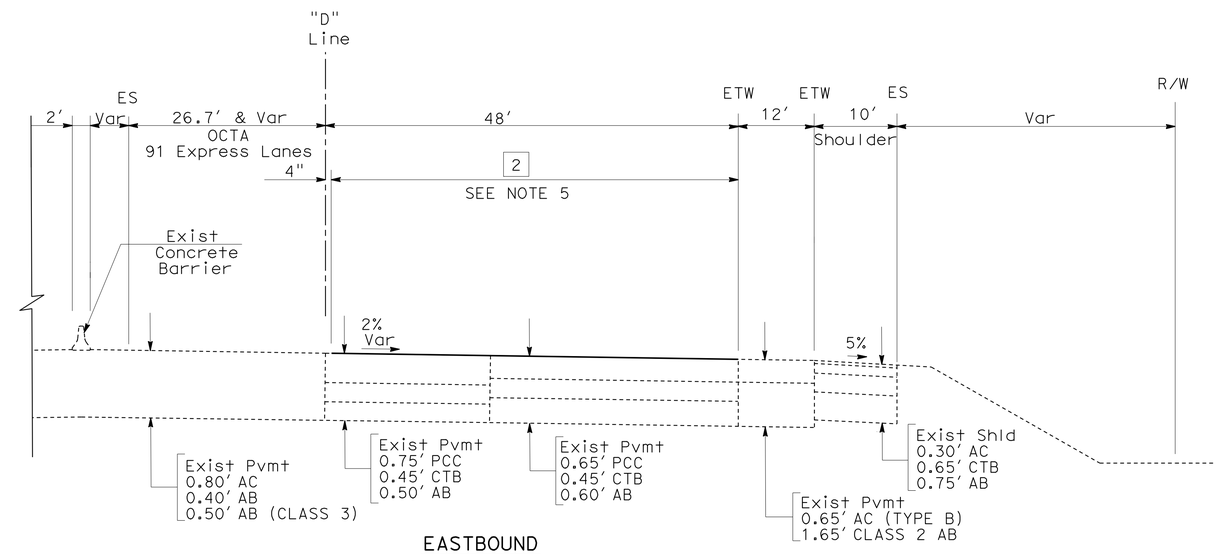

EASTBOUND

"D" 354+88.2 TO "D" 386+11

ROUTE 91

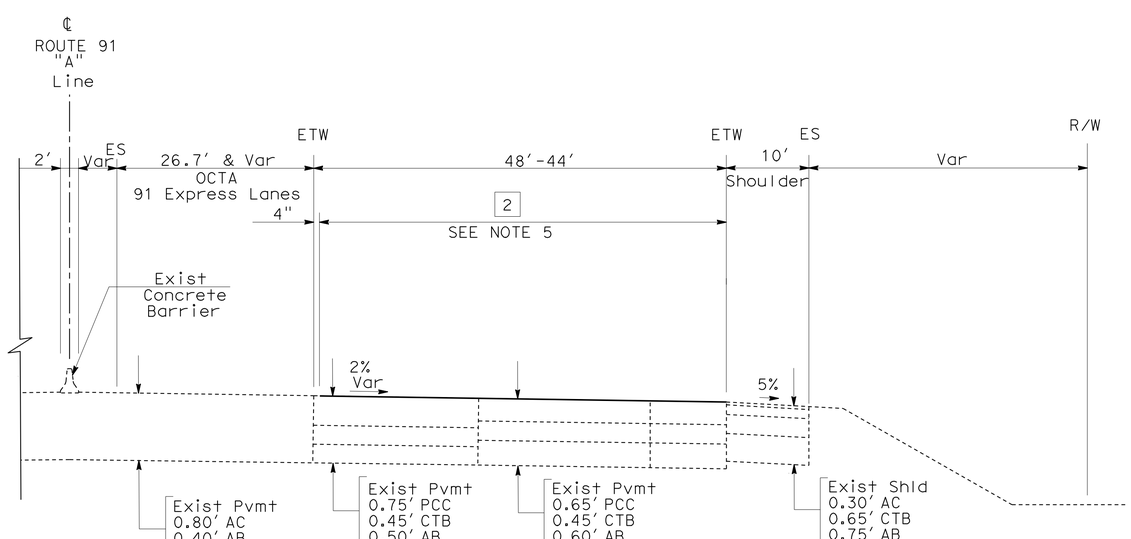

EASTBOUND

"A" 176+79.2 TO "A" 187+93.15
"A" 189+43.15 TO "A" 287+76.66

ROUTE 91

TYPICAL CROSS SECTIONS

NO SCALE

X-2

REVISED BY	Y. NGUYEN
DATE REVISED	04-14-10
YENHAI NGUYEN	
KEITH TA	
CALCULATED-DESIGNED BY	
CHECKED BY	
FUNCTIONAL SUPERVISOR	
LISA ALVISO	

STATE OF CALIFORNIA - DEPARTMENT OF TRANSPORTATION
Caltrans®
DESIGN BRANCH B

LAST REVISION 04-14-10 | DATE PLOTTED => 27-JUL-2010 | TIME PLOTTED => 15:51

Dist	COUNTY	ROUTE	POST MILES TOTAL PROJECT	SHEET No.	TOTAL SHEETS
12	Ora	91	R9.2/R15.9	4	86

REGISTERED CIVIL ENGINEER 06-15-10 DATE

7-26-10
PLANS APPROVAL DATE

REGISTERED PROFESSIONAL ENGINEER
YENHAI M. NGUYEN
No. C62100
Exp. 9/30/11
CIVIL
STATE OF CALIFORNIA

THE STATE OF CALIFORNIA OR ITS OFFICERS OR AGENTS SHALL NOT BE RESPONSIBLE FOR THE ACCURACY OR COMPLETENESS OF SCANNED COPIES OF THIS PLAN SHEET.

NOTES:

1. FOR COMPLETE RIGHT OF WAY AND ACCURATE ACCESS DATA, CONTACT RIGHT OF WAY ENGINEERING AT THE DISTRICT OFFICE.
2. LOCATIONS OF EXISTING UTILITY FACILITIES SHOW ON THIS PLAN ARE APPROXIMATE AND SHALL BE VERIFIED BY THE CONTRACTOR PRIOR TO CONSTRUCTION.
3. THE GRINDING AND/OR GROOVING OF EXISTING CONCRETE PAVEMENT SHALL STOP WITHIN 4" OF OCTA EXPRESS LANE YELLOW THERMOPLASTIC BUFFER.
4. FOR DIKE AND CURB TRANSITION DETAILS SEE CONSTRUCTION DETAIL SHEETS.

ABBREVIATIONS:

OCTA ORANGE COUNTY TRANSPORTATION AUTHORITY

CURVE DATA

No.	R	Δ	T	L
1	1975′	11°4′26"	191.45′	381.72′

LEGEND:

[X] STRUCTURAL SECTION TYPE SEE SHEET X-1

(X) CURVE No.

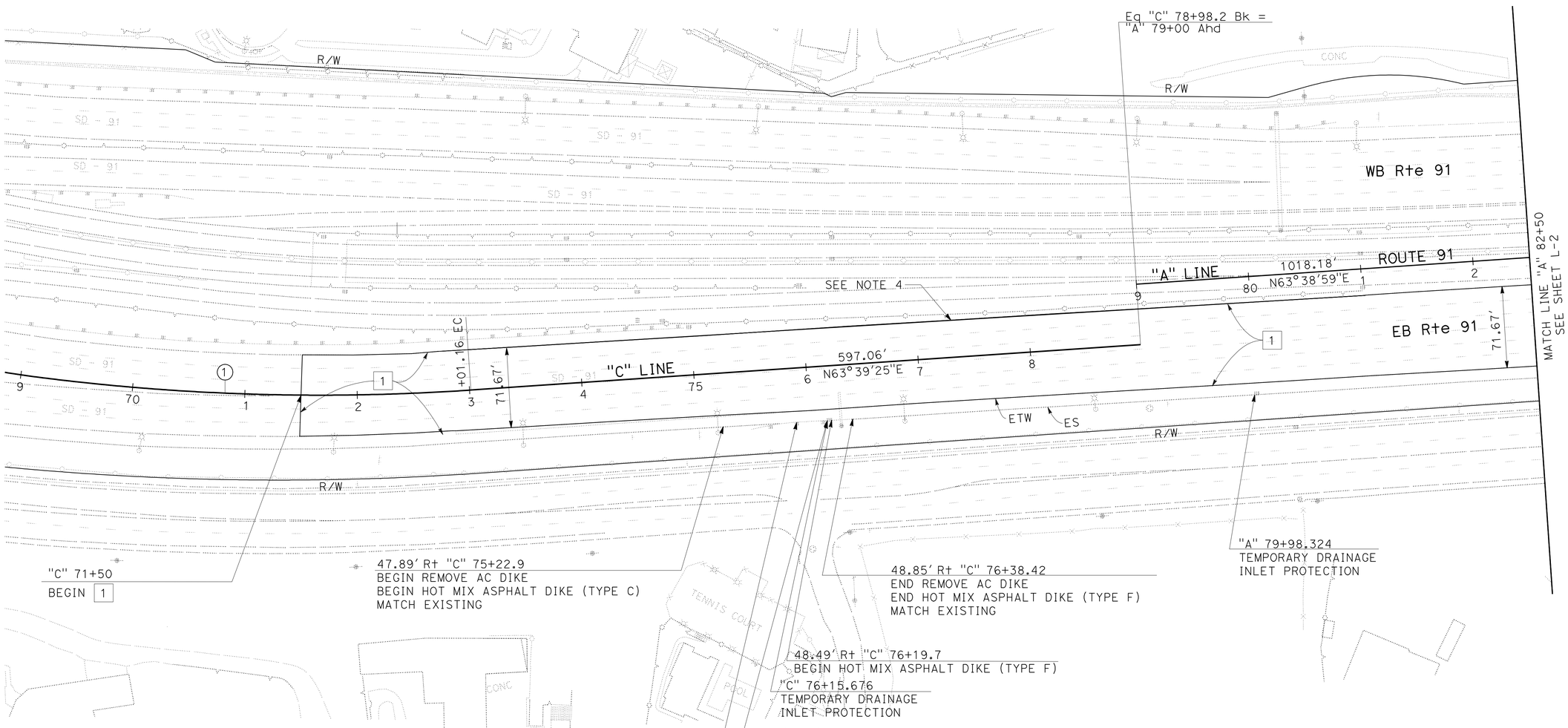

LAYOUT

SCALE: 1" = 50′

L-1

REVISED BY	DATE REVISED
Y. NGUYEN	04-14-10

CALCULATED-DESIGNED BY: YENHAI NGUYEN
CHECKED BY: KEITH TA
FUNCTIONAL SUPERVISOR: LISA ALVISO

STATE OF CALIFORNIA - DEPARTMENT OF TRANSPORTATION
Caltrans®
DESIGN BRANCH B

LAST REVISION 04-14-10
DATE PLOTTED => 27-JUL-2010
TIME PLOTTED => 16:05

Dist	COUNTY	ROUTE	POST MILES TOTAL PROJECT	SHEET No.	TOTAL SHEETS
12	Ora	91	R9.2/R15.9	5	86

REGISTERED CIVIL ENGINEER 06-15-10 DATE

7-26-10
PLANS APPROVAL DATE

REGISTERED PROFESSIONAL ENGINEER
YENHAI M. NGUYEN
No. C62100
Exp. 9/30/11
CIVIL
STATE OF CALIFORNIA

THE STATE OF CALIFORNIA OR ITS OFFICERS OR AGENTS SHALL NOT BE RESPONSIBLE FOR THE ACCURACY OR COMPLETENESS OF SCANNED COPIES OF THIS PLAN SHEET.

NOTE:

1. FOR COMPLETE RIGHT OF WAY AND ACCURATE ACCESS DATA, CONTACT RIGHT OF WAY ENGINEERING AT THE DISTRICT OFFICE.

CURVE DATA

No.	R	Δ	T	L
2	3000′	10°9′41″	266.73′	532.05′

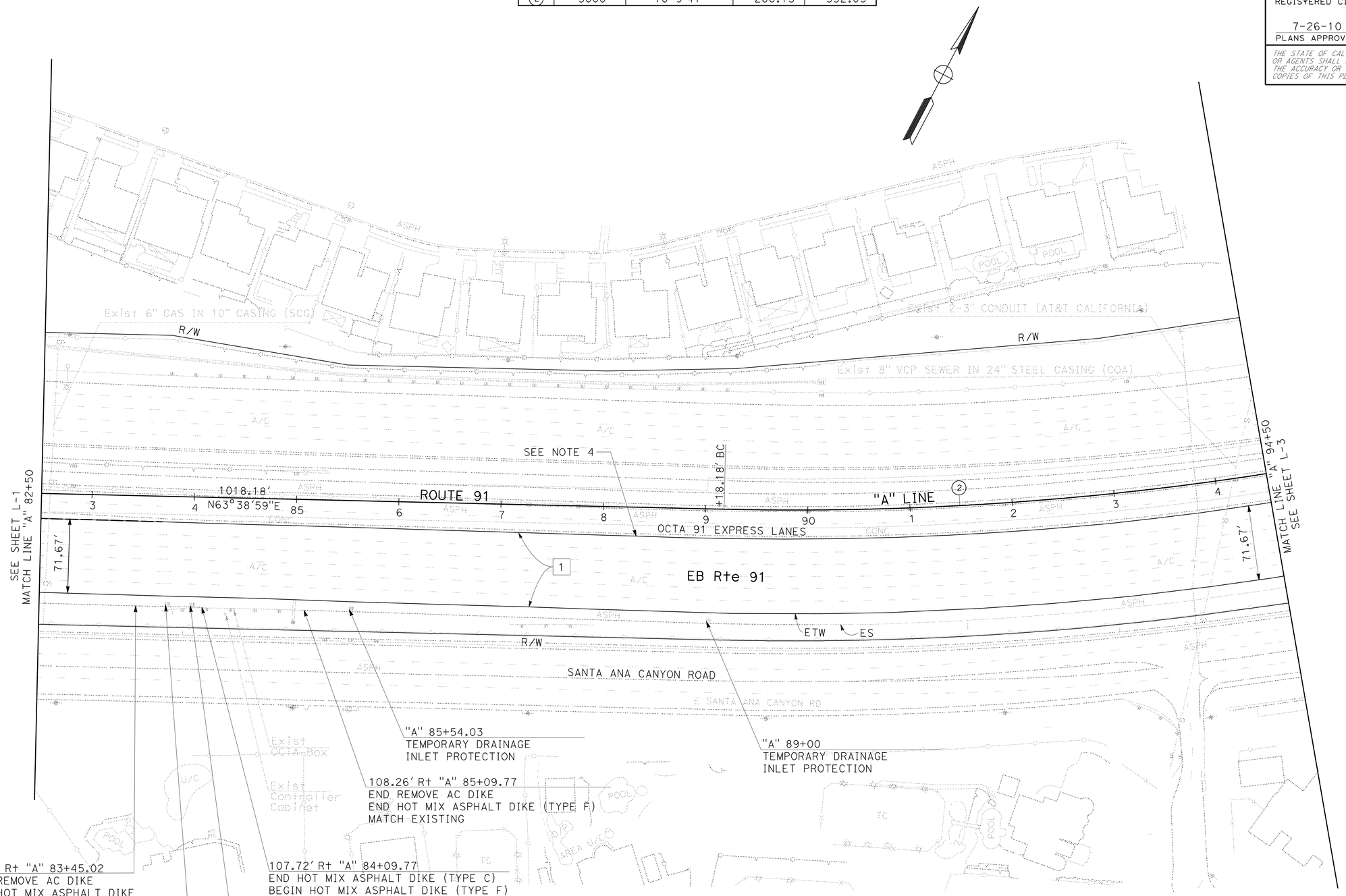

LAYOUT

SCALE: 1" = 50′

L-2

CALCULATED-DESIGNED BY	YENHAI NGUYEN	REVISED BY	Y. NGUYEN
CHECKED BY	KEITH TA	DATE REVISED	04-14-10

FUNCTIONAL SUPERVISOR: LISA ALVISO

STATE OF CALIFORNIA - DEPARTMENT OF TRANSPORTATION
Caltrans® DESIGN BRANCH B

LAST REVISION 04-14-10 | DATE PLOTTED => 28-JUL-2010 | TIME PLOTTED => 07:54

Dist	COUNTY	ROUTE	POST MILES TOTAL PROJECT	SHEET No.	TOTAL SHEETS
12	Ora	91	R9.2/R15.9	6	86

06-15-10
REGISTERED CIVIL ENGINEER DATE

7-26-10
PLANS APPROVAL DATE

REGISTERED PROFESSIONAL ENGINEER
YENHAI M. NGUYEN
No. C62100
Exp. 9/30/11
CIVIL
STATE OF CALIFORNIA

THE STATE OF CALIFORNIA OR ITS OFFICERS OR AGENTS SHALL NOT BE RESPONSIBLE FOR THE ACCURACY OR COMPLETENESS OF SCANNED COPIES OF THIS PLAN SHEET.

NOTE:

1. FOR COMPLETE RIGHT OF WAY AND ACCURATE ACCESS DATA, CONTACT RIGHT OF WAY ENGINEERING AT THE DISTRICT OFFICE.

CURVE DATA

No.	R	Δ	T	L
2	3000′	18°35′9″	490.89′	973.15′

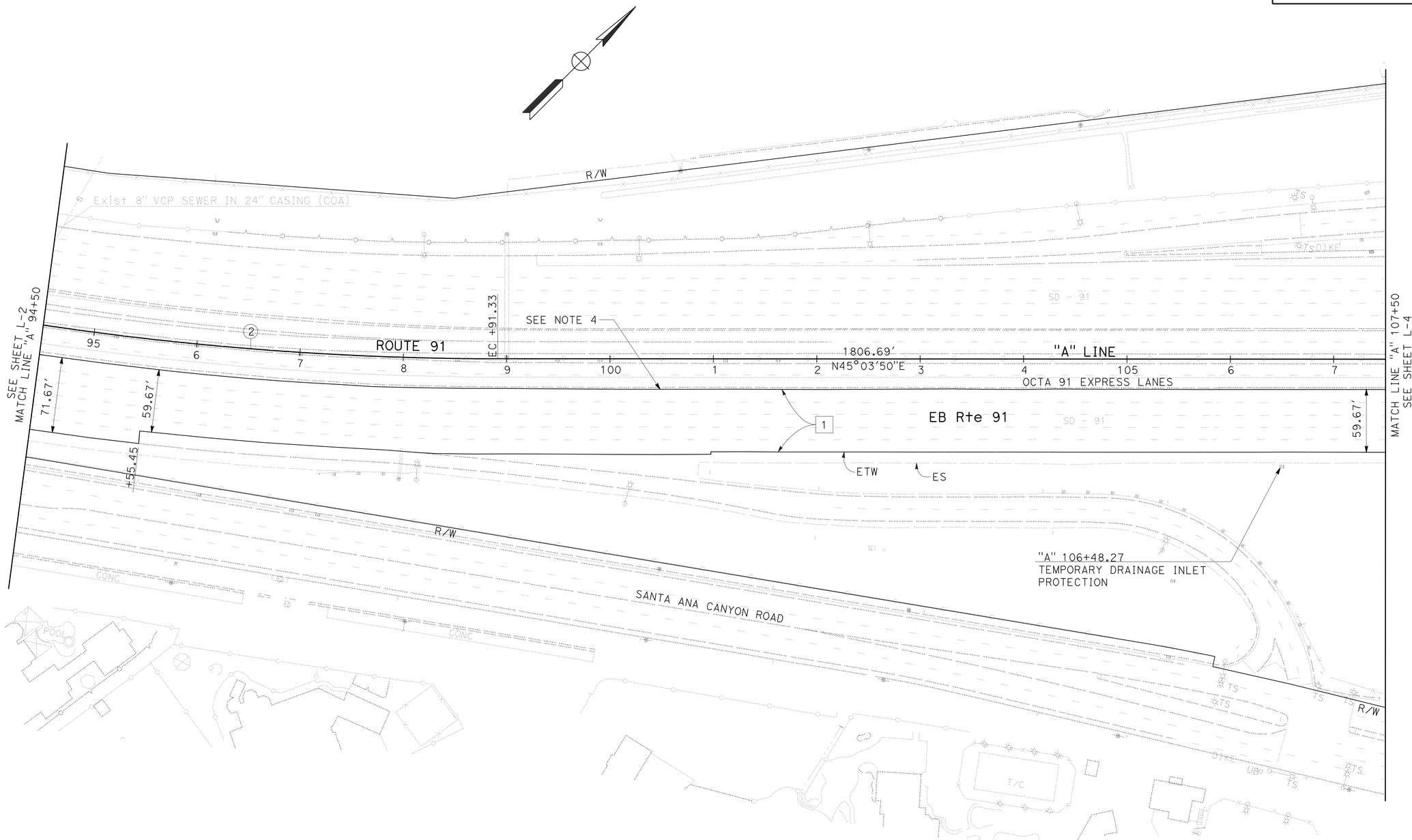

LAYOUT

SCALE: 1" = 50′

L-3

STATE OF CALIFORNIA - DEPARTMENT OF TRANSPORTATION
Caltrans
DESIGN BRANCH B

FUNCTIONAL SUPERVISOR: LISA ALVISO
CALCULATED-DESIGNED BY: YENHAI NGUYEN
CHECKED BY: KEITH TA
REVISED BY: Y. NGUYEN
DATE REVISED: 04-14-10

LAST REVISION 04-14-10
DATE PLOTTED => 28-JUL-2010
TIME PLOTTED => 07:54

BORDER LAST REVISED 4/11/2008
RELATIVE BORDER SCALE IS IN INCHES 0 1 2 3
USERNAME => trmnguye
DGN FILE => f0K680ea003.dgn
CU 12221
EA 0K6801

Dist	COUNTY	ROUTE	POST MILES TOTAL PROJECT	SHEET No.	TOTAL SHEETS
12	Ora	91	R9.2/R15.9	7	86

06-15-10
REGISTERED CIVIL ENGINEER DATE

7-26-10
PLANS APPROVAL DATE

REGISTERED PROFESSIONAL ENGINEER
YENHAI M. NGUYEN
No. C62100
Exp. 9/30/11
CIVIL
STATE OF CALIFORNIA

THE STATE OF CALIFORNIA OR ITS OFFICERS OR AGENTS SHALL NOT BE RESPONSIBLE FOR THE ACCURACY OR COMPLETENESS OF SCANNED COPIES OF THIS PLAN SHEET.

NOTE:

1. FOR COMPLETE RIGHT OF WAY AND ACCURATE ACCESS DATA, CONTACT RIGHT OF WAY ENGINEERING AT THE DISTRICT OFFICE.

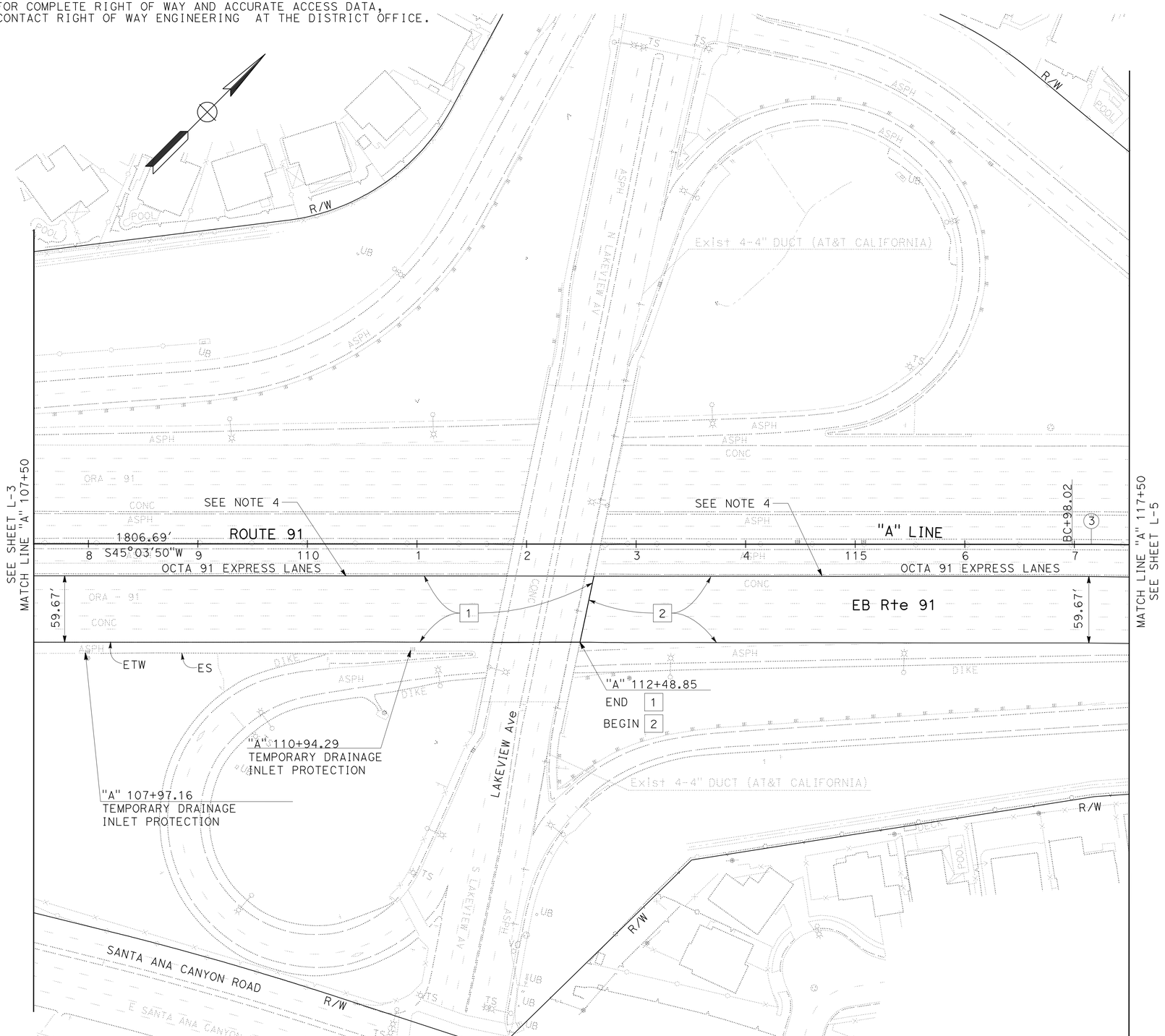

CURVE DATA

No.	R	Δ	T	L
3	3200'	47°10'0"	1396.94'	2634.28'

LAYOUT

SCALE: 1" = 50'

L-4

STATE OF CALIFORNIA - DEPARTMENT OF TRANSPORTATION
Caltrans
DESIGN BRANCH B

FUNCTIONAL SUPERVISOR: LISA ALVISO
CALCULATED-DESIGNED BY: YENHAI NGUYEN
CHECKED BY: KEITH TA
REVISED BY: Y. NGUYEN
DATE REVISED: 04-14-10

LAST REVISION 04-14-10 | DATE PLOTTED => 28-JUL-2010 | TIME PLOTTED => 07:55

BORDER LAST REVISED 4/11/2008 | RELATIVE BORDER SCALE IS IN INCHES 0 1 2 3 | USERNAME => trmnguye | DGN FILE => f0K680ea004.dgn | CU 12221 | EA 0K6801

Dist	COUNTY	ROUTE	POST MILES TOTAL PROJECT	SHEET No.	TOTAL SHEETS
12	Ora	91	R9.2/R15.9	8	86

06-15-10
REGISTERED CIVIL ENGINEER DATE

7-26-10
PLANS APPROVAL DATE

REGISTERED PROFESSIONAL ENGINEER
YENHAI M. NGUYEN
No. C62100
Exp. 9/30/11
CIVIL
STATE OF CALIFORNIA

THE STATE OF CALIFORNIA OR ITS OFFICERS OR AGENTS SHALL NOT BE RESPONSIBLE FOR THE ACCURACY OR COMPLETENESS OF SCANNED COPIES OF THIS PLAN SHEET.

NOTE:

1. FOR COMPLETE RIGHT OF WAY AND ACCURATE ACCESS DATA, CONTACT RIGHT OF WAY ENGINEERING AT THE DISTRICT OFFICE.

CURVE DATA

No.	R	Δ	T	L
3	3200′	47°10′0″	1396.94′	2634.28′

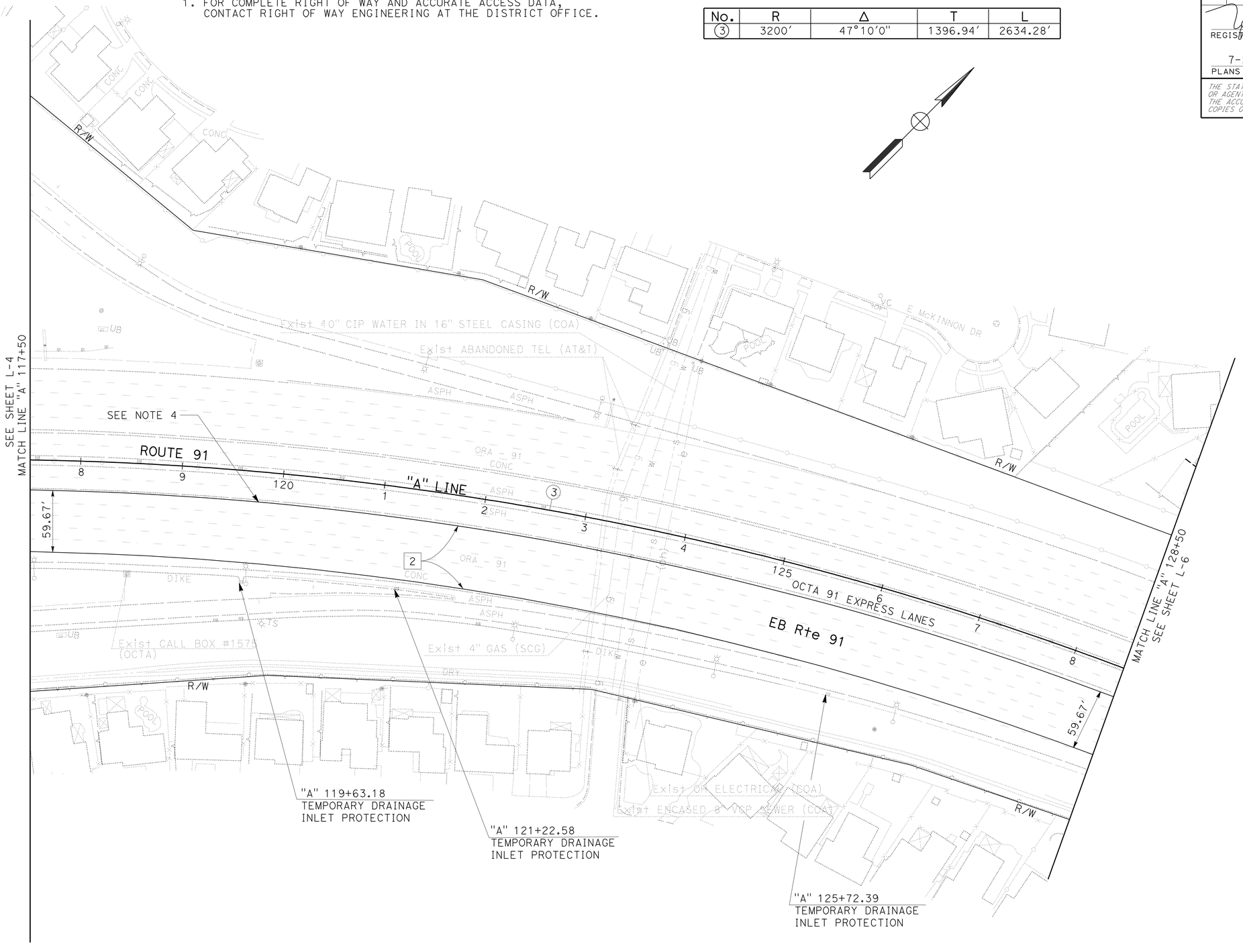

LAYOUT

SCALE: 1" = 50′

L-5

STATE OF CALIFORNIA - DEPARTMENT OF TRANSPORTATION	FUNCTIONAL SUPERVISOR	CALCULATED-DESIGNED BY	YENHAI NGUYEN
Caltrans® DESIGN BRANCH B	LISA ALVISO	CHECKED BY	KEITH TA
		REVISED BY	Y. NGUYEN
		DATE REVISED	04-14-10

LAST REVISION 04-14-10 | DATE PLOTTED => 28-JUL-2010 | TIME PLOTTED => 07:55

Dist	COUNTY	ROUTE	POST MILES TOTAL PROJECT	SHEET No.	TOTAL SHEETS
12	Ora	91	R9.2/R15.9	9	86

06-15-10
REGISTERED CIVIL ENGINEER DATE

7-26-10
PLANS APPROVAL DATE

REGISTERED PROFESSIONAL ENGINEER
YENHAI M. NGUYEN
No. C62100
Exp. 9/30/11
CIVIL
STATE OF CALIFORNIA

THE STATE OF CALIFORNIA OR ITS OFFICERS OR AGENTS SHALL NOT BE RESPONSIBLE FOR THE ACCURACY OR COMPLETENESS OF SCANNED COPIES OF THIS PLAN SHEET.

NOTE:

1. FOR COMPLETE RIGHT OF WAY AND ACCURATE ACCESS DATA, CONTACT RIGHT OF WAY ENGINEERING AT THE DISTRICT OFFICE.

CURVE DATA

No.	R	Δ	T	L
3	3200′	47°10′0″	1396.94′	2634.28′

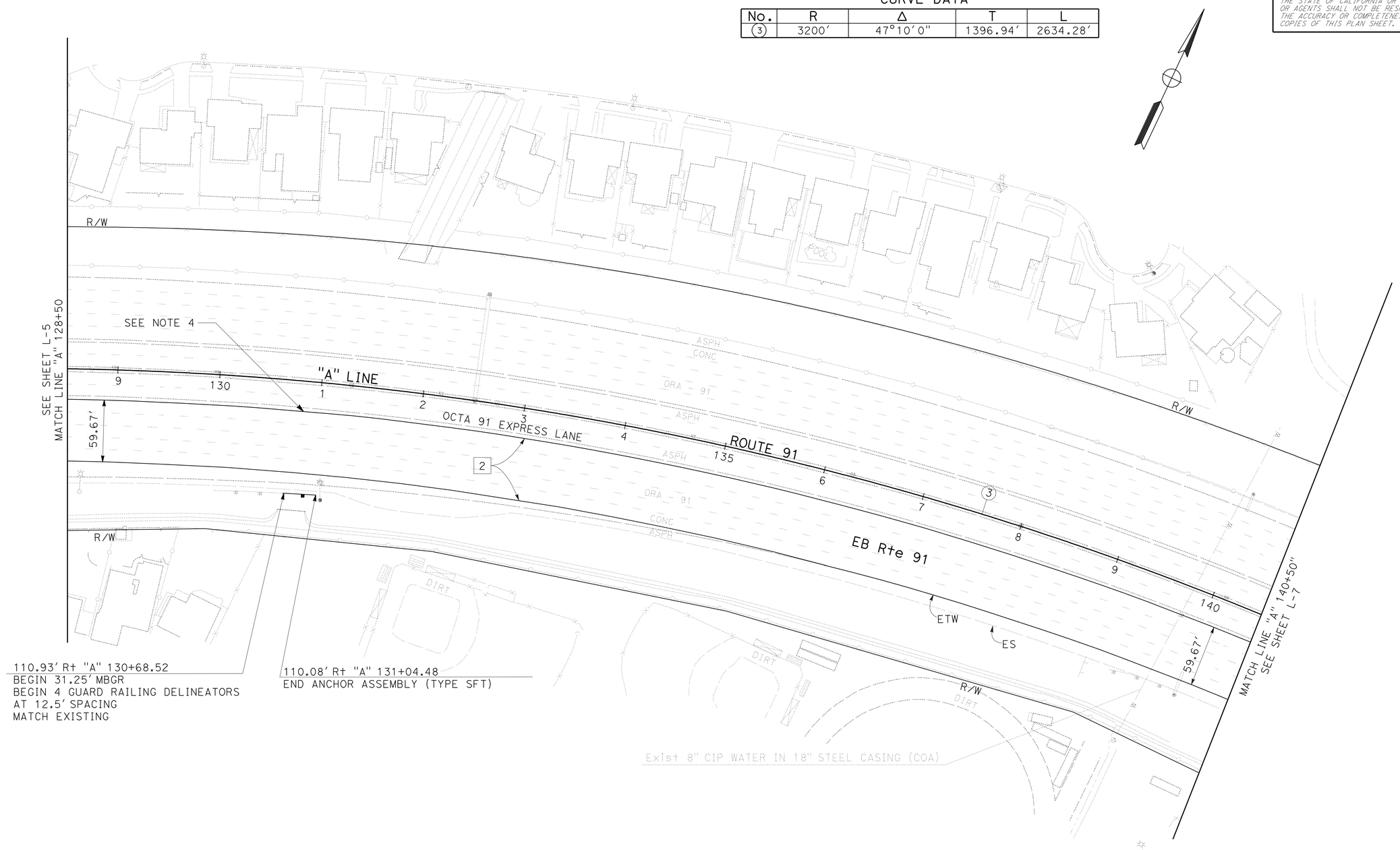

110.93′ Rt "A" 130+68.52
BEGIN 31.25′ MBGR
BEGIN 4 GUARD RAILING DELINEATORS
AT 12.5′ SPACING
MATCH EXISTING

110.08′ Rt "A" 131+04.48
END ANCHOR ASSEMBLY (TYPE SFT)

LAYOUT

SCALE: 1" = 50′

L-6

STATE OF CALIFORNIA - DEPARTMENT OF TRANSPORTATION
Caltrans®
DESIGN BRANCH B

FUNCTIONAL SUPERVISOR: LISA ALVISO

CALCULATED-DESIGNED BY: YENHAI NGUYEN
CHECKED BY: KEITH TA

REVISED BY: Y. NGUYEN
DATE REVISED: 04-14-10

LAST REVISION 04-14-10
DATE PLOTTED => 28-JUL-2010
TIME PLOTTED => 07:55

Dist	COUNTY	ROUTE	POST MILES TOTAL PROJECT	SHEET No.	TOTAL SHEETS
12	Ora	91	R9.2/R15.9	10	86

06-15-10
REGISTERED CIVIL ENGINEER DATE

7-26-10
PLANS APPROVAL DATE

REGISTERED PROFESSIONAL ENGINEER
YENHAI M. NGUYEN
No. C62100
Exp. 9/30/11
CIVIL
STATE OF CALIFORNIA

THE STATE OF CALIFORNIA OR ITS OFFICERS OR AGENTS SHALL NOT BE RESPONSIBLE FOR THE ACCURACY OR COMPLETENESS OF SCANNED COPIES OF THIS PLAN SHEET.

NOTE:

1. FOR COMPLETE RIGHT OF WAY AND ACCURATE ACCESS DATA, CONTACT RIGHT OF WAY ENGINEERING AT THE DISTRICT OFFICE.

CURVE DATA

No.	R	Δ	T	L
3	3200′	47°10′0″	1396.94′	2634.28′

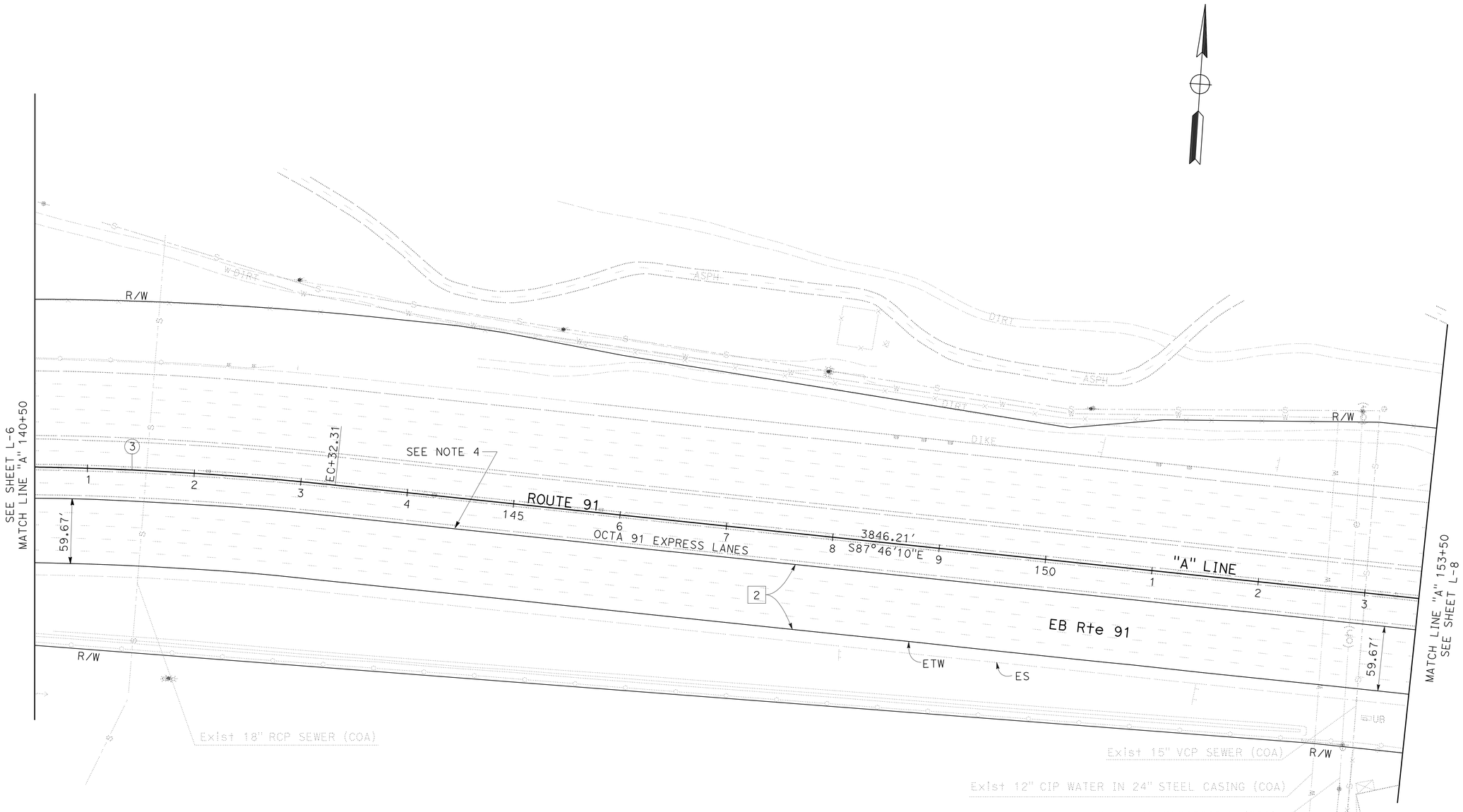

LAYOUT

SCALE: 1" = 50′

L-7

STATE OF CALIFORNIA - DEPARTMENT OF TRANSPORTATION
Caltrans
DESIGN BRANCH B

FUNCTIONAL SUPERVISOR: LISA ALVISO

CALCULATED-DESIGNED BY: YENHAI NGUYEN
CHECKED BY: KEITH TA

REVISED BY: Y. NGUYEN
DATE REVISED: 04-14-10

LAST REVISION 04-14-10 | DATE PLOTTED => 28-JUL-2010 | TIME PLOTTED => 07:55

BORDER LAST REVISED 4/11/2008

RELATIVE BORDER SCALE IS IN INCHES 0 1 2 3

USERNAME => trmnguye
DGN FILE => f0K680ea007.dgn

CU 12221

EA 0K6801

Dist	COUNTY	ROUTE	POST MILES TOTAL PROJECT	SHEET No.	TOTAL SHEETS
12	Ora	91	R9.2/R15.9	11	86

06-15-10
REGISTERED CIVIL ENGINEER DATE

7-26-10
PLANS APPROVAL DATE

REGISTERED PROFESSIONAL ENGINEER
YENHAI M. NGUYEN
No. C62100
Exp. 9/30/11
CIVIL
STATE OF CALIFORNIA

THE STATE OF CALIFORNIA OR ITS OFFICERS OR AGENTS SHALL NOT BE RESPONSIBLE FOR THE ACCURACY OR COMPLETENESS OF SCANNED COPIES OF THIS PLAN SHEET.

NOTE:

1. FOR COMPLETE RIGHT OF WAY AND ACCURATE ACCESS DATA, CONTACT RIGHT OF WAY ENGINEERING AT THE DISTRICT OFFICE.

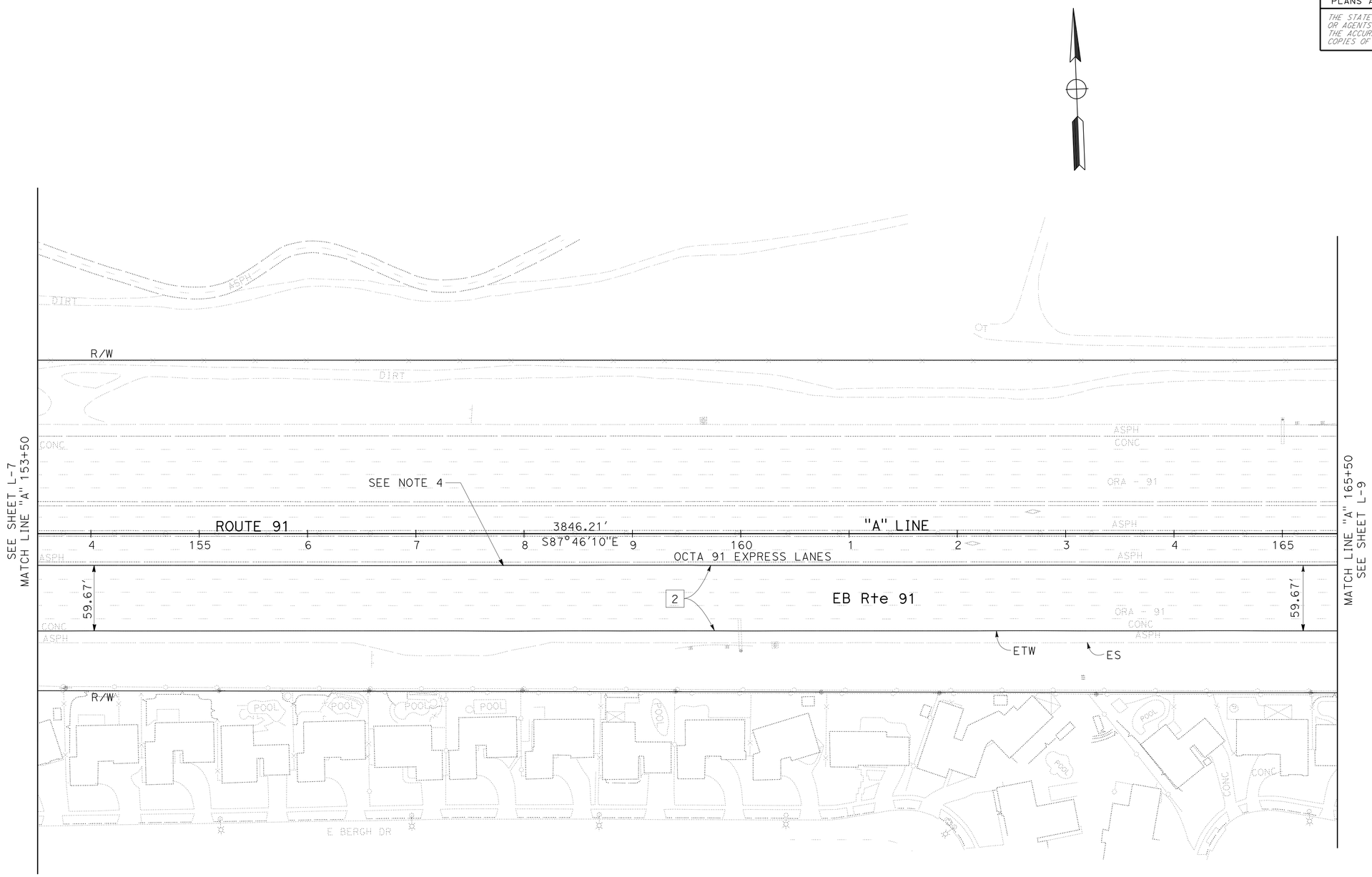

LAYOUT

SCALE: 1" = 50'

L-8

STATE OF CALIFORNIA - DEPARTMENT OF TRANSPORTATION	
Caltrans DESIGN BRANCH B	
FUNCTIONAL SUPERVISOR	LISA ALVISO
CALCULATED-DESIGNED BY	YENHAI NGUYEN
CHECKED BY	KEITH TA
REVISED BY	Y. NGUYEN
DATE REVISED	04-14-10

LAST REVISION 04-14-10 | DATE PLOTTED => 28-JUL-2010 | TIME PLOTTED => 08:01

Dist	COUNTY	ROUTE	POST MILES TOTAL PROJECT	SHEET No.	TOTAL SHEETS
12	Ora	91	R9.2/R15.9	12	86

REGISTERED CIVIL ENGINEER 06-15-10 DATE

7-26-10
PLANS APPROVAL DATE

REGISTERED PROFESSIONAL ENGINEER
YENHAI M. NGUYEN
No. C62100
Exp. 9/30/11
CIVIL
STATE OF CALIFORNIA

THE STATE OF CALIFORNIA OR ITS OFFICERS OR AGENTS SHALL NOT BE RESPONSIBLE FOR THE ACCURACY OR COMPLETENESS OF SCANNED COPIES OF THIS PLAN SHEET.

NOTE:

1. FOR COMPLETE RIGHT OF WAY AND ACCURATE ACCESS DATA, CONTACT RIGHT OF WAY ENGINEERING AT THE DISTRICT OFFICE.

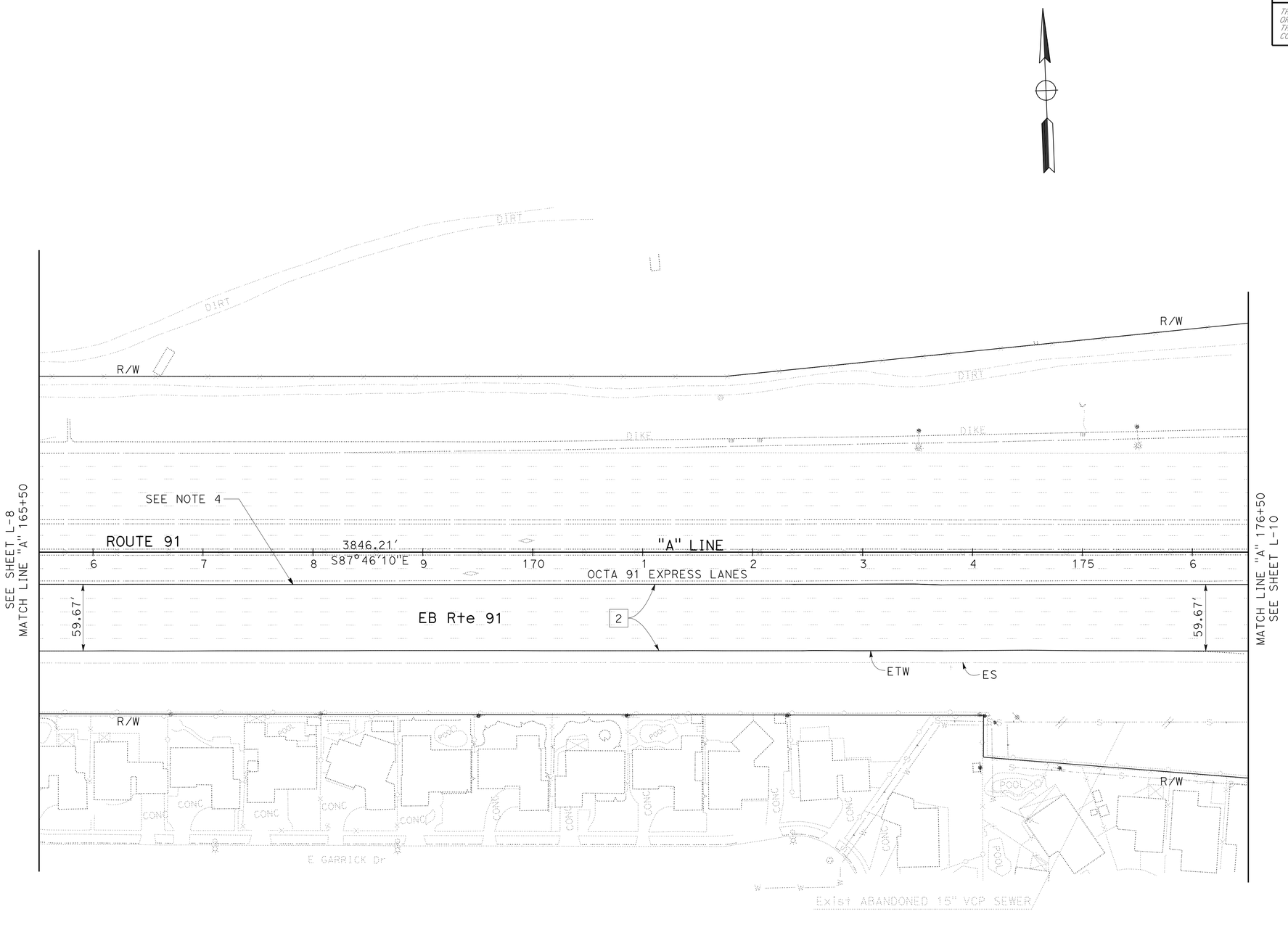

LAYOUT

SCALE: 1" = 50'

L-9

STATE OF CALIFORNIA - DEPARTMENT OF TRANSPORTATION
Caltrans
DESIGN BRANCH B

FUNCTIONAL SUPERVISOR: LISA ALVISO

CALCULATED-DESIGNED BY: YENHAI NGUYEN
CHECKED BY: KEITH TA

REVISED BY: Y. NGUYEN
DATE REVISED: 04-14-10

LAST REVISION 04-14-10
DATE PLOTTED => 27-JUL-2010
TIME PLOTTED => 15:34

BORDER LAST REVISED 4/11/2008

RELATIVE BORDER SCALE IS IN INCHES 0 1 2 3

USERNAME => trstrk
DGN FILE => f0k680ea009.dgn

CU 12221

EA 0K6801

Dist	COUNTY	ROUTE	POST MILES TOTAL PROJECT	SHEET No.	TOTAL SHEETS
12	Ora	91	R9.2/R15.9	13	86

06-15-10
REGISTERED CIVIL ENGINEER DATE

7-26-10
PLANS APPROVAL DATE

REGISTERED PROFESSIONAL ENGINEER
YENHAI M. NGUYEN
No. C62100
Exp. 9/30/11
CIVIL
STATE OF CALIFORNIA

THE STATE OF CALIFORNIA OR ITS OFFICERS OR AGENTS SHALL NOT BE RESPONSIBLE FOR THE ACCURACY OR COMPLETENESS OF SCANNED COPIES OF THIS PLAN SHEET.

NOTE:

1. FOR COMPLETE RIGHT OF WAY AND ACCURATE ACCESS DATA, CONTACT RIGHT OF WAY ENGINEERING AT THE DISTRICT OFFICE.

CURVE DATA

No.	R	Δ	T	L
4	3000′	31°36′0″	848.91′	1654.57′

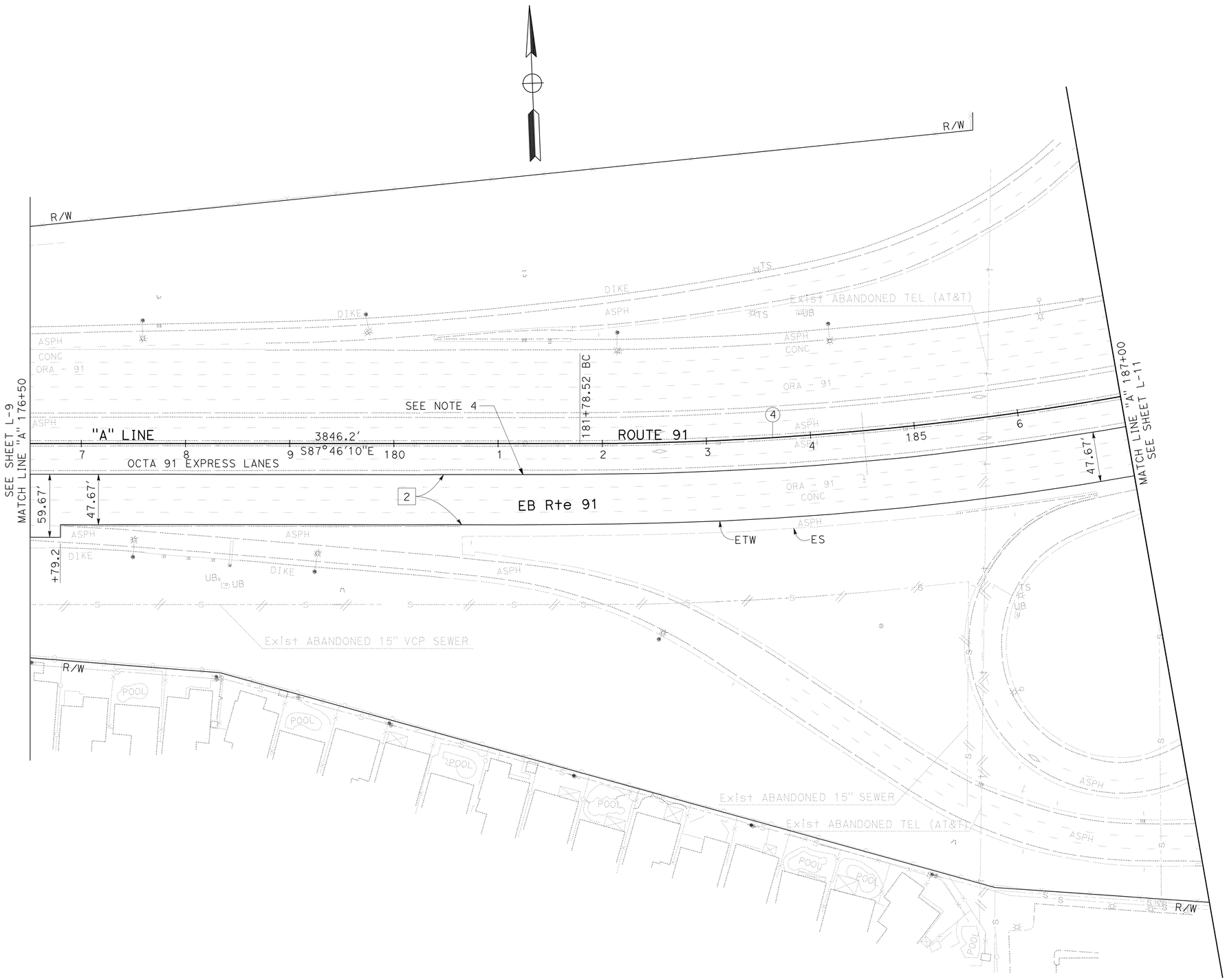

LAYOUT

SCALE: 1" = 50′

L-10

STATE OF CALIFORNIA - DEPARTMENT OF TRANSPORTATION
Caltrans
DESIGN BRANCH B

FUNCTIONAL SUPERVISOR: LISA ALVISO

CALCULATED-DESIGNED BY: YENHAI NGUYEN
CHECKED BY: KEITH TA

REVISED BY: Y. NGUYEN
DATE REVISED: 04-14-10

LAST REVISION 04-14-10 | DATE PLOTTED => 27-JUL-2010 | TIME PLOTTED => 15:30

BORDER LAST REVISED 4/11/2008 | RELATIVE BORDER SCALE IS IN INCHES 0 1 2 3 | USERNAME => trstrk | DGN FILE => f0K680ea010.dgn | CU 12221 | EA 0K6801

Dist	COUNTY	ROUTE	POST MILES TOTAL PROJECT	SHEET No.	TOTAL SHEETS
12	Ora	91	R9.2/R15.9	14	86

06-15-10
REGISTERED CIVIL ENGINEER DATE

7-26-10
PLANS APPROVAL DATE

REGISTERED PROFESSIONAL ENGINEER
YENHAI M. NGUYEN
No. C62100
Exp. 9/30/11
CIVIL
STATE OF CALIFORNIA

THE STATE OF CALIFORNIA OR ITS OFFICERS OR AGENTS SHALL NOT BE RESPONSIBLE FOR THE ACCURACY OR COMPLETENESS OF SCANNED COPIES OF THIS PLAN SHEET.

NOTE:

1. FOR COMPLETE RIGHT OF WAY AND ACCURATE ACCESS DATA, CONTACT RIGHT OF WAY ENGINEERING AT THE DISTRICT OFFICE.

CURVE DATA

No.	R	Δ	T	L
(4)	3000′	31°36′0″	848.91′	1654.57′

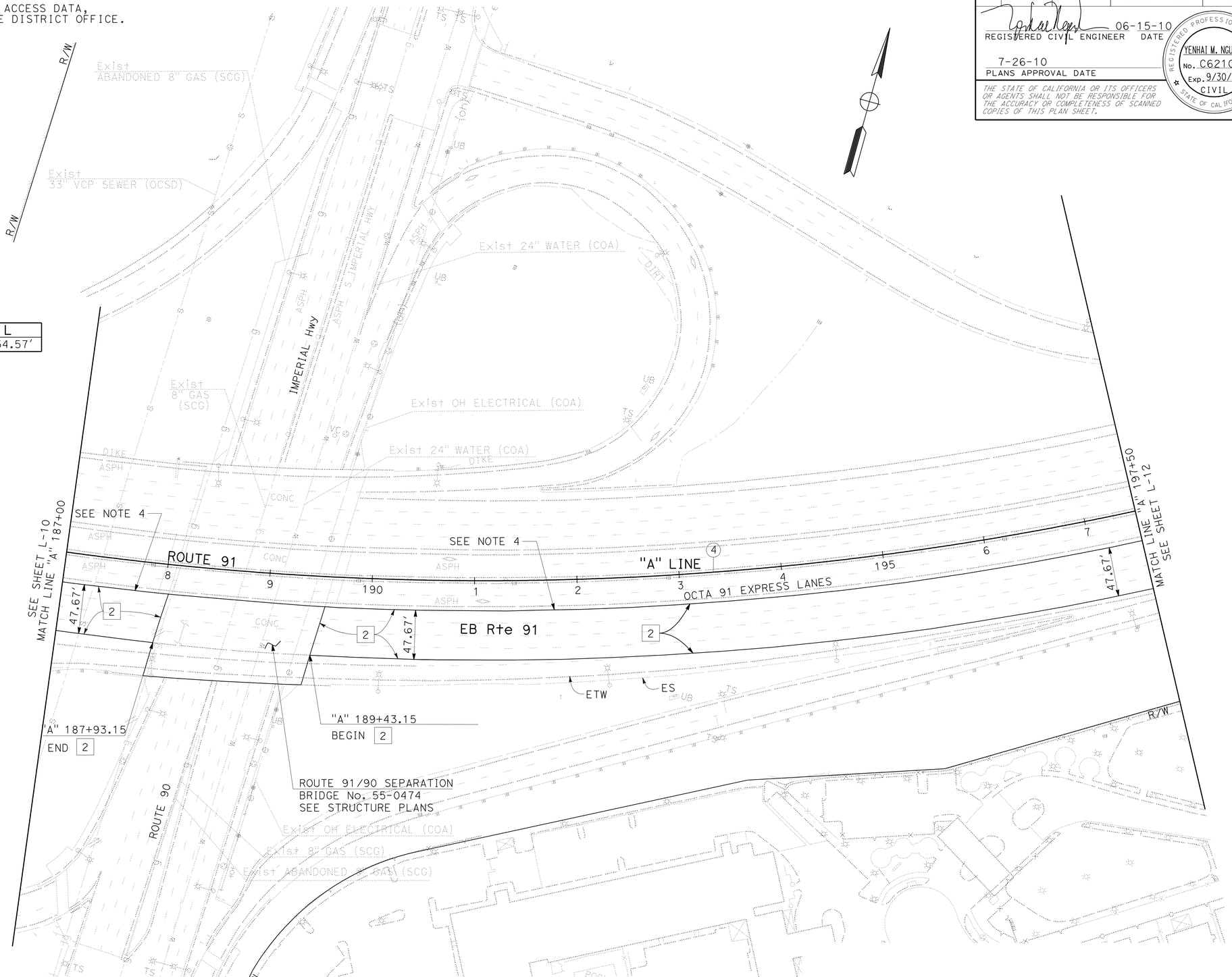

LAYOUT

SCALE: 1" = 50′

L-11

STATE OF CALIFORNIA - DEPARTMENT OF TRANSPORTATION
Caltrans
DESIGN BRANCH B

FUNCTIONAL SUPERVISOR: LISA ALVISO

CALCULATED-DESIGNED BY: YENHAI NGUYEN
CHECKED BY: KEITH TA

REVISED BY: Y. NGUYEN
DATE REVISED: 04-14-10

LAST REVISION 04-14-10 | DATE PLOTTED => 27-JUL-2010 | TIME PLOTTED => 15:35

BORDER LAST REVISED 4/11/2008 | RELATIVE BORDER SCALE IS IN INCHES 0 1 2 3 | USERNAME => trstrk | DGN FILE => f0K680ea011.dgn | CU 12221 | EA 0K6801

Dist	COUNTY	ROUTE	POST MILES TOTAL PROJECT	SHEET No.	TOTAL SHEETS
12	Ora	91	R9.2/R15.9	15	86

06-15-10
REGISTERED CIVIL ENGINEER DATE

7-26-10
PLANS APPROVAL DATE

REGISTERED PROFESSIONAL ENGINEER
YENHAI M. NGUYEN
No. C62100
Exp. 9/30/11
CIVIL
STATE OF CALIFORNIA

THE STATE OF CALIFORNIA OR ITS OFFICERS OR AGENTS SHALL NOT BE RESPONSIBLE FOR THE ACCURACY OR COMPLETENESS OF SCANNED COPIES OF THIS PLAN SHEET.

NOTE:

1. FOR COMPLETE RIGHT OF WAY AND ACCURATE ACCESS DATA, CONTACT RIGHT OF WAY ENGINEERING AT THE DISTRICT OFFICE.

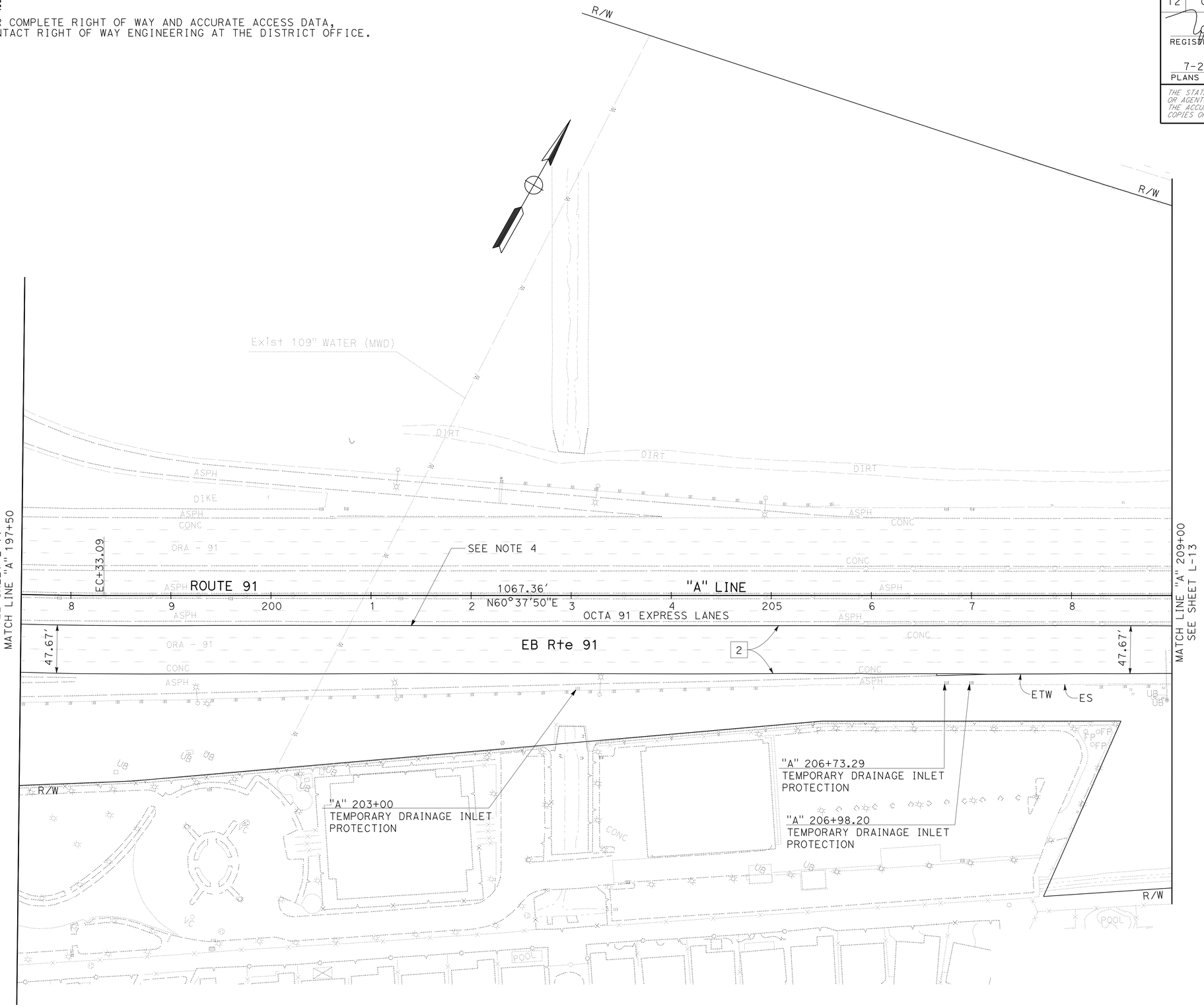

LAYOUT

SCALE: 1" = 50'

L-12

STATE OF CALIFORNIA - DEPARTMENT OF TRANSPORTATION
Caltrans®
DESIGN BRANCH B

FUNCTIONAL SUPERVISOR: LISA ALVISO

CALCULATED-DESIGNED BY: YENHAI NGUYEN
CHECKED BY: KEITH TA

REVISED BY: Y. NGUYEN
DATE REVISED: 04-14-10

LAST REVISION: 04-14-10
DATE PLOTTED => 27-JUL-2010
TIME PLOTTED => 15:37

BORDER LAST REVISED 4/11/2008

RELATIVE BORDER SCALE IS IN INCHES 0 1 2 3

USERNAME => trstrk
DGN FILE => f0k680ea012.dgn

CU 12221

EA 0K6801

Dist	COUNTY	ROUTE	POST MILES TOTAL PROJECT	SHEET No.	TOTAL SHEETS
12	Ora	91	R9.2/R15.9	16	86

06-15-10
REGISTERED CIVIL ENGINEER DATE

7-26-10
PLANS APPROVAL DATE

REGISTERED PROFESSIONAL ENGINEER
YENHAI M. NGUYEN
No. C62100
Exp. 9/30/11
CIVIL
STATE OF CALIFORNIA

THE STATE OF CALIFORNIA OR ITS OFFICERS OR AGENTS SHALL NOT BE RESPONSIBLE FOR THE ACCURACY OR COMPLETENESS OF SCANNED COPIES OF THIS PLAN SHEET.

NOTE:

1. FOR COMPLETE RIGHT OF WAY AND ACCURATE ACCESS DATA, CONTACT RIGHT OF WAY ENGINEERING AT THE DISTRICT OFFICE.

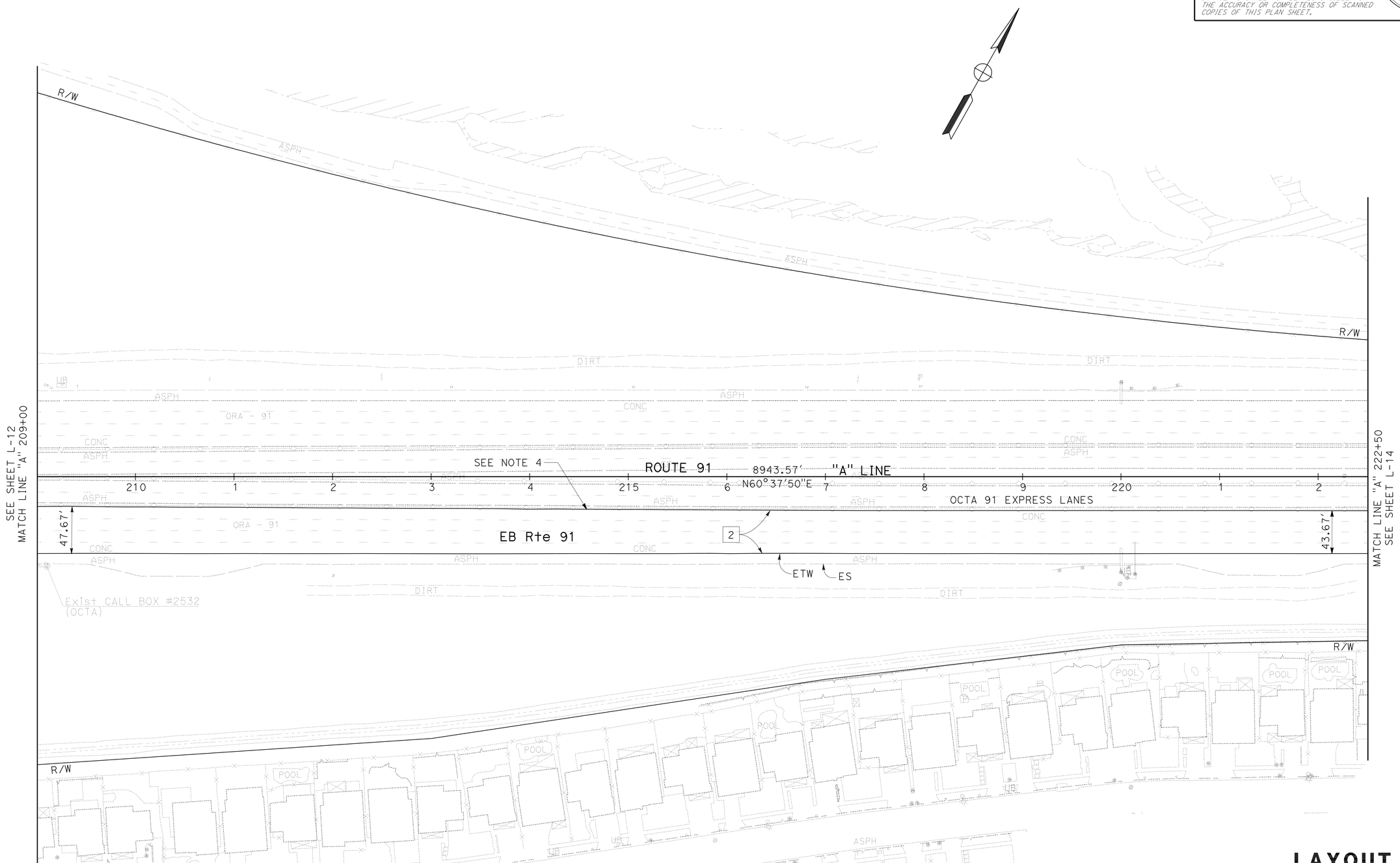

LAYOUT

SCALE: 1" = 50'

L-13

STATE OF CALIFORNIA - DEPARTMENT OF TRANSPORTATION
Caltrans
DESIGN BRANCH B

FUNCTIONAL SUPERVISOR: LISA ALVISO

CALCULATED-DESIGNED BY: YENHAI NGUYEN
CHECKED BY: KEITH TA

REVISED BY: Y. NGUYEN
DATE REVISED: 04-14-10

LAST REVISION 04-14-10
DATE PLOTTED => 27-JUL-2010
TIME PLOTTED => 15:31

BORDER LAST REVISED 4/11/2008

RELATIVE BORDER SCALE IS IN INCHES 0 1 2 3

USERNAME => trstrk
DGN FILE => f0K680ea013.dgn

CU 12221

EA 0K6801

Dist	COUNTY	ROUTE	POST MILES TOTAL PROJECT	SHEET No.	TOTAL SHEETS
12	Ora	91	R9.2/R15.9	17	86

REGISTERED CIVIL ENGINEER DATE 06-15-10

PLANS APPROVAL DATE 7-26-10

REGISTERED PROFESSIONAL ENGINEER
YENHAI M. NGUYEN
No. C62100
Exp. 9/30/11
CIVIL
STATE OF CALIFORNIA

THE STATE OF CALIFORNIA OR ITS OFFICERS OR AGENTS SHALL NOT BE RESPONSIBLE FOR THE ACCURACY OR COMPLETENESS OF SCANNED COPIES OF THIS PLAN SHEET.

NOTE:

1. FOR COMPLETE RIGHT OF WAY AND ACCURATE ACCESS DATA, CONTACT RIGHT OF WAY ENGINEERING AT THE DISTRICT OFFICE.

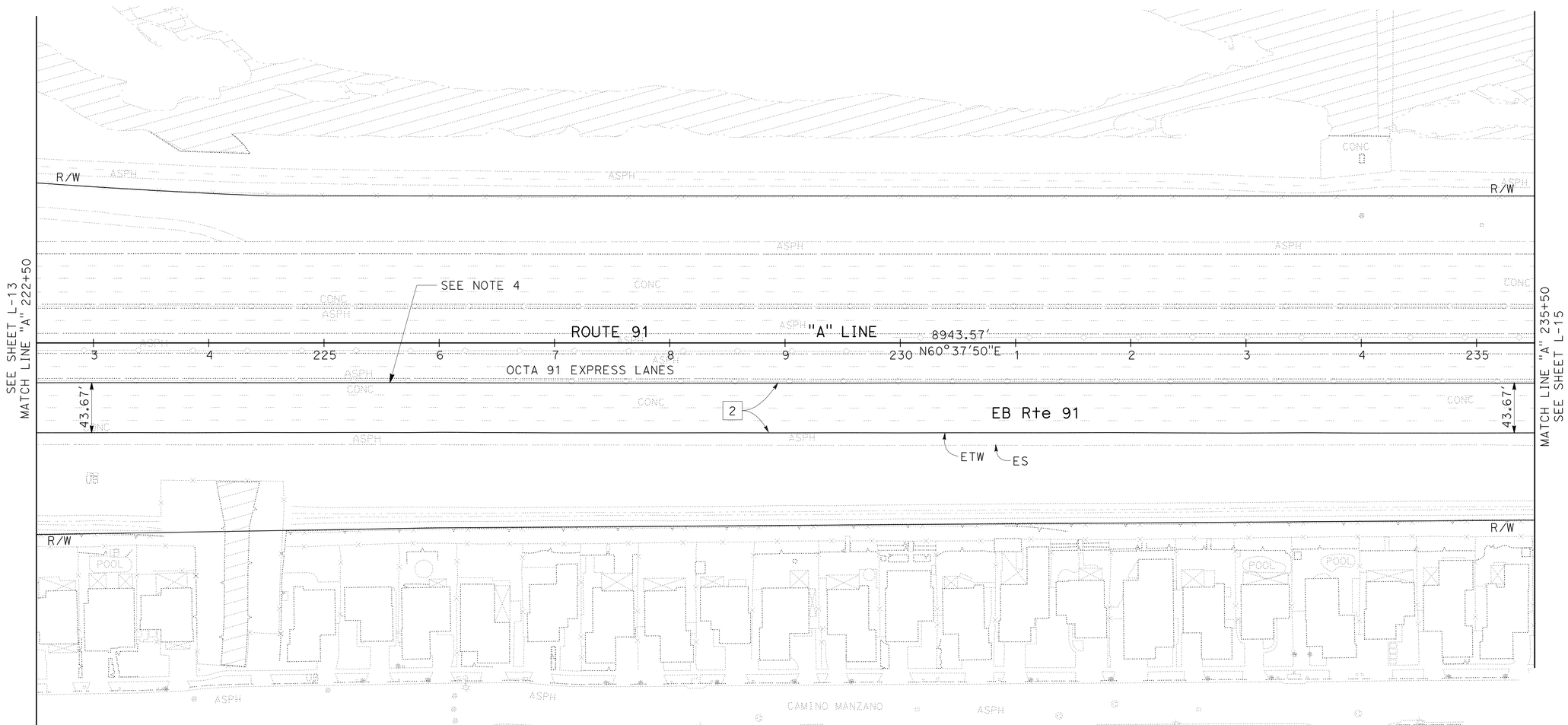

LAYOUT

SCALE: 1" = 50'

L-14

STATE OF CALIFORNIA - DEPARTMENT OF TRANSPORTATION	Caltrans
DESIGN BRANCH B	
FUNCTIONAL SUPERVISOR	LISA ALVISO
CALCULATED-DESIGNED BY	YENHAI NGUYEN
CHECKED BY	KEITH TA
REVISED BY	Y. NGUYEN
DATE REVISED	04-14-10

LAST REVISION 04-14-10 | DATE PLOTTED => 27-JUL-2010 | TIME PLOTTED => 15:31

BORDER LAST REVISED 4/11/2008 | RELATIVE BORDER SCALE IS IN INCHES 0 1 2 3 | USERNAME => trstrk | DGN FILE => f0K680eq014.dgn | CU 12221 | EA 0K6801

Dist	COUNTY	ROUTE	POST MILES TOTAL PROJECT	SHEET No.	TOTAL SHEETS
12	Ora	91	R9.2/R15.9	18	86

06-15-10
REGISTERED CIVIL ENGINEER DATE

7-26-10
PLANS APPROVAL DATE

REGISTERED PROFESSIONAL ENGINEER
YENHAI M. NGUYEN
No. C62100
Exp. 9/30/11
CIVIL
STATE OF CALIFORNIA

THE STATE OF CALIFORNIA OR ITS OFFICERS OR AGENTS SHALL NOT BE RESPONSIBLE FOR THE ACCURACY OR COMPLETENESS OF SCANNED COPIES OF THIS PLAN SHEET.

NOTE:

1. FOR COMPLETE RIGHT OF WAY AND ACCURATE ACCESS DATA, CONTACT RIGHT OF WAY ENGINEERING AT THE DISTRICT OFFICE.

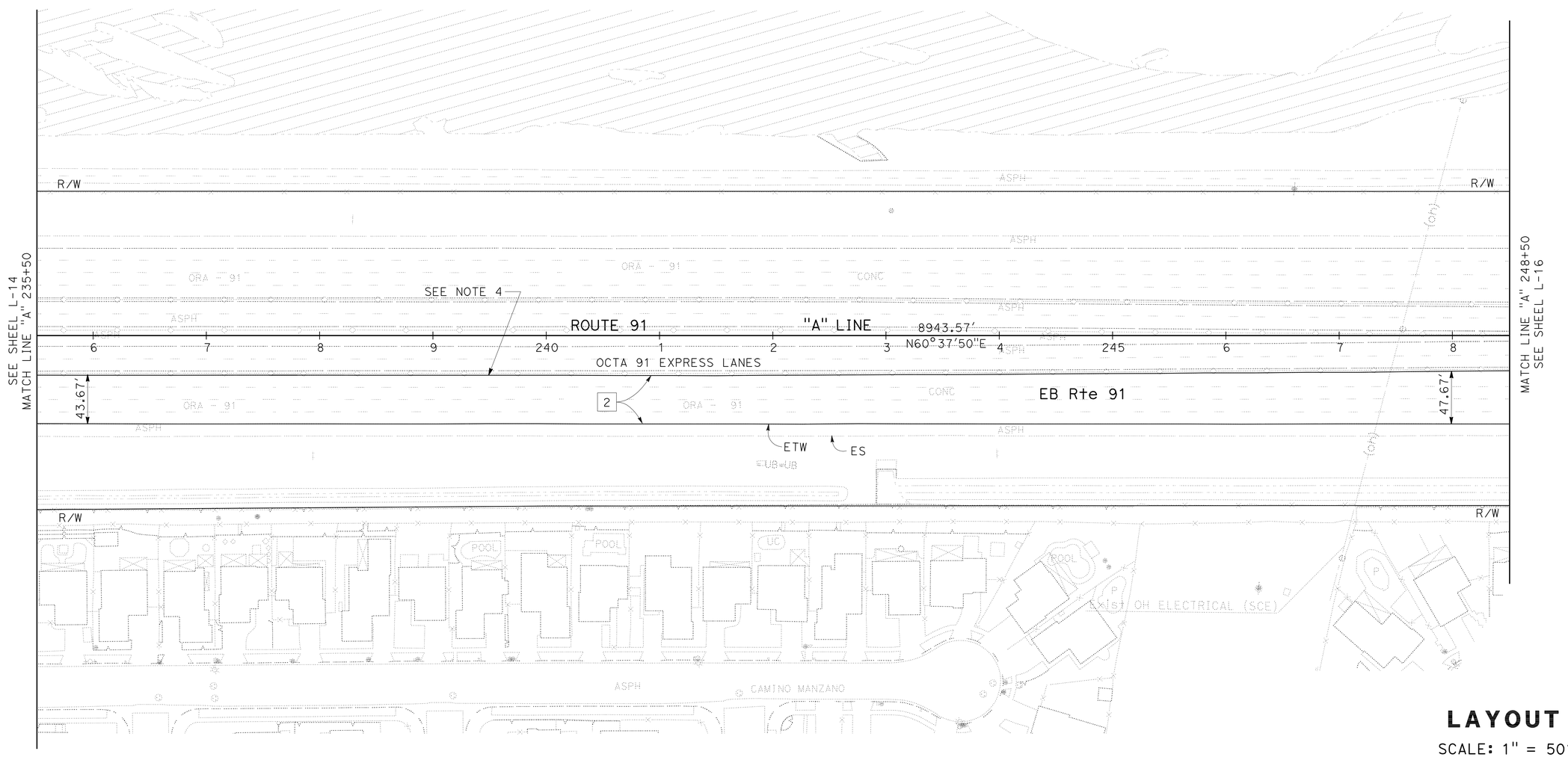

LAYOUT

SCALE: 1" = 50'

L-15

STATE OF CALIFORNIA - DEPARTMENT OF TRANSPORTATION
Caltrans
DESIGN BRANCH B

FUNCTIONAL SUPERVISOR: LISA ALVISO

CALCULATED-DESIGNED BY: YENHAI NGUYEN
CHECKED BY: KEITH TA

REVISED BY: Y. NGUYEN
DATE REVISED: 04-14-10

LAST REVISION 04-14-10
DATE PLOTTED => 27-JUL-2010
TIME PLOTTED => 15:38

BORDER LAST REVISED 4/11/2008
RELATIVE BORDER SCALE IS IN INCHES 0 1 2 3
USERNAME => trstrk
DGN FILE => f0k680ea015.dgn
CU 12221
EA 0K6801

Dist	COUNTY	ROUTE	POST MILES TOTAL PROJECT	SHEET No.	TOTAL SHEETS
12	Ora	91	R9.2/R15.9	19	86

REGISTERED CIVIL ENGINEER 06-15-10 DATE

7-26-10
PLANS APPROVAL DATE

REGISTERED PROFESSIONAL ENGINEER
YENHAI M. NGUYEN
No. C62100
Exp. 9/30/11
CIVIL
STATE OF CALIFORNIA

THE STATE OF CALIFORNIA OR ITS OFFICERS OR AGENTS SHALL NOT BE RESPONSIBLE FOR THE ACCURACY OR COMPLETENESS OF SCANNED COPIES OF THIS PLAN SHEET.

NOTE:

1. FOR COMPLETE RIGHT OF WAY AND ACCURATE ACCESS DATA, CONTACT RIGHT OF WAY ENGINEERING AT THE DISTRICT OFFICE.

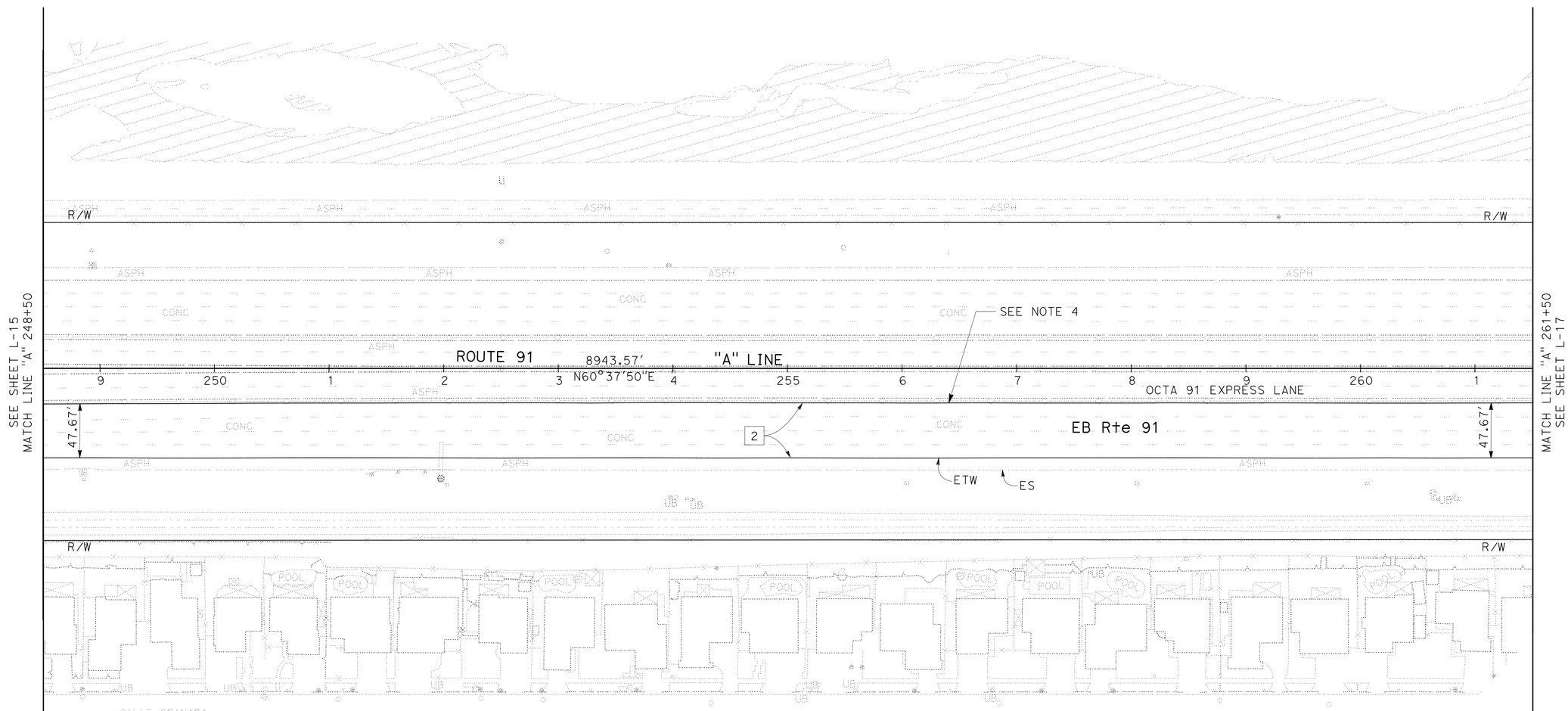

LAYOUT

SCALE: 1" = 50'

L-16

REVISED BY	Y. NGUYEN
DATE REVISED	04-14-10
CALCULATED-DESIGNED BY	YENHAI NGUYEN
CHECKED BY	KEITH TA
FUNCTIONAL SUPERVISOR	LISA ALVISO

STATE OF CALIFORNIA - DEPARTMENT OF TRANSPORTATION
Caltrans® DESIGN BRANCH B

LAST REVISION 04-14-10 | DATE PLOTTED => 27-JUL-2010 | TIME PLOTTED => 15:31

BORDER LAST REVISED 4/11/2008 | RELATIVE BORDER SCALE IS IN INCHES 0 1 2 3 | USERNAME => trstrk | DGN FILE => f0K680ea016.dgn | CU 12221 | EA 0K6801

Dist	COUNTY	ROUTE	POST MILES TOTAL PROJECT	SHEET No.	TOTAL SHEETS
12	Ora	91	R9.2/R15.9	20	86

06-15-10
REGISTERED CIVIL ENGINEER DATE

7-26-10
PLANS APPROVAL DATE

REGISTERED PROFESSIONAL ENGINEER
YENHAI M. NGUYEN
No. C62100
Exp. 9/30/11
CIVIL
STATE OF CALIFORNIA

THE STATE OF CALIFORNIA OR ITS OFFICERS OR AGENTS SHALL NOT BE RESPONSIBLE FOR THE ACCURACY OR COMPLETENESS OF SCANNED COPIES OF THIS PLAN SHEET.

NOTE:

1. FOR COMPLETE RIGHT OF WAY AND ACCURATE ACCESS DATA, CONTACT RIGHT OF WAY ENGINEERING AT THE DISTRICT OFFICE.

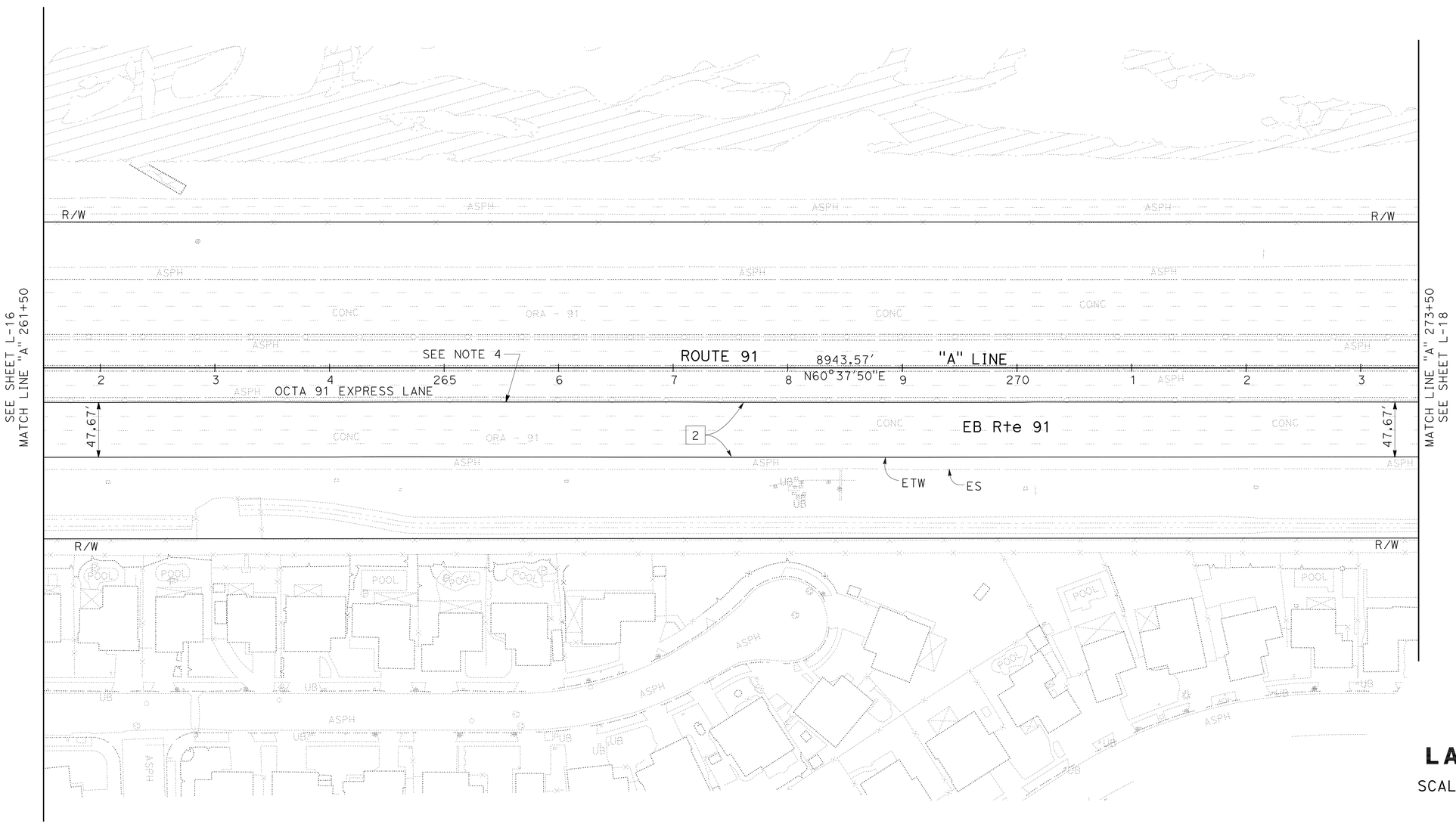

LAYOUT

SCALE: 1" = 50'

L-17

STATE OF CALIFORNIA - DEPARTMENT OF TRANSPORTATION
Caltrans® DESIGN BRANCH B

FUNCTIONAL SUPERVISOR: LISA ALVISO
CALCULATED-DESIGNED BY: YENHAI NGUYEN
CHECKED BY: KEITH TA
REVISED BY: Y. NGUYEN
DATE REVISED: 04-14-10

LAST REVISION 04-14-10
DATE PLOTTED => 27-JUL-2010
TIME PLOTTED => 15:31

Dist	COUNTY	ROUTE	POST MILES TOTAL PROJECT	SHEET No.	TOTAL SHEETS
12	Ora	91	R9.2/R15.9	21	86

REGISTERED CIVIL ENGINEER 06-15-10 DATE

7-26-10
PLANS APPROVAL DATE

REGISTERED PROFESSIONAL ENGINEER
YENHAI M. NGUYEN
No. C62100
Exp. 9/30/11
CIVIL
STATE OF CALIFORNIA

THE STATE OF CALIFORNIA OR ITS OFFICERS OR AGENTS SHALL NOT BE RESPONSIBLE FOR THE ACCURACY OR COMPLETENESS OF SCANNED COPIES OF THIS PLAN SHEET.

NOTE:

1. FOR COMPLETE RIGHT OF WAY AND ACCURATE ACCESS DATA, CONTACT RIGHT OF WAY ENGINEERING AT THE DISTRICT OFFICE.

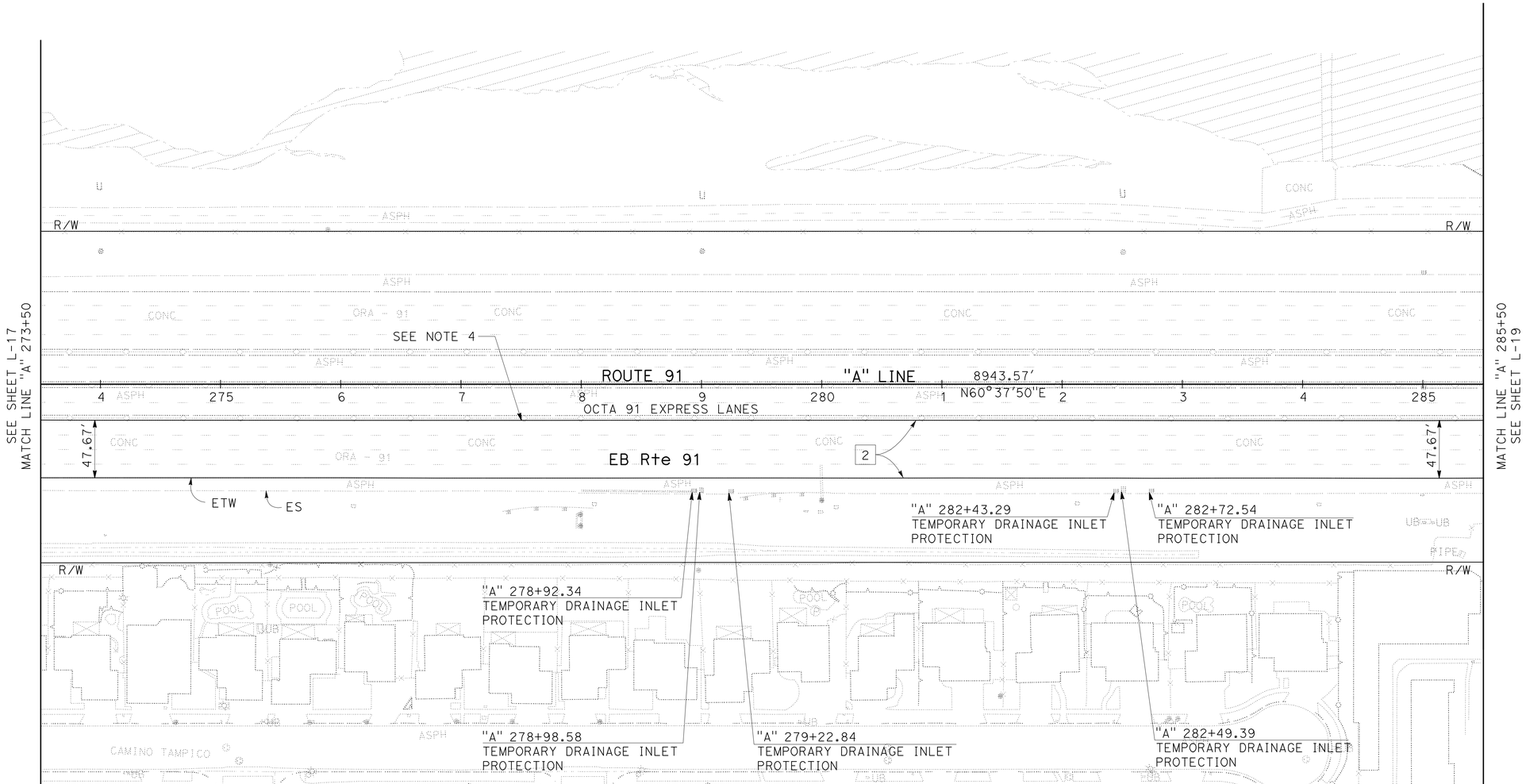

LAYOUT

SCALE: 1" = 50'

L-18

REVISED BY	Y. NGUYEN
DATE REVISED	04-14-10
CALCULATED-DESIGNED BY	YENHAI NGUYEN
CHECKED BY	KEITH TA
FUNCTIONAL SUPERVISOR	LISA ALVISO

STATE OF CALIFORNIA - DEPARTMENT OF TRANSPORTATION
Caltrans®
DESIGN BRANCH B

LAST REVISION 04-14-10 | DATE PLOTTED => 27-JUL-2010 | TIME PLOTTED => 15:31

Dist	COUNTY	ROUTE	POST MILES TOTAL PROJECT	SHEET No.	TOTAL SHEETS
12	Ora	91	R9.2/R15.9	22	86

06-15-10
REGISTERED CIVIL ENGINEER DATE

7-26-10
PLANS APPROVAL DATE

REGISTERED PROFESSIONAL ENGINEER
YENHAI M. NGUYEN
No. C62100
Exp. 9/30/11
CIVIL
STATE OF CALIFORNIA

THE STATE OF CALIFORNIA OR ITS OFFICERS OR AGENTS SHALL NOT BE RESPONSIBLE FOR THE ACCURACY OR COMPLETENESS OF SCANNED COPIES OF THIS PLAN SHEET.

NOTE:

1. FOR COMPLETE RIGHT OF WAY AND ACCURATE ACCESS DATA, CONTACT RIGHT OF WAY ENGINEERING AT THE DISTRICT OFFICE.

CURVE DATA

No.	R	Δ	T	L
(5)	3000′	24°29′55″	651.33′	1282.74′

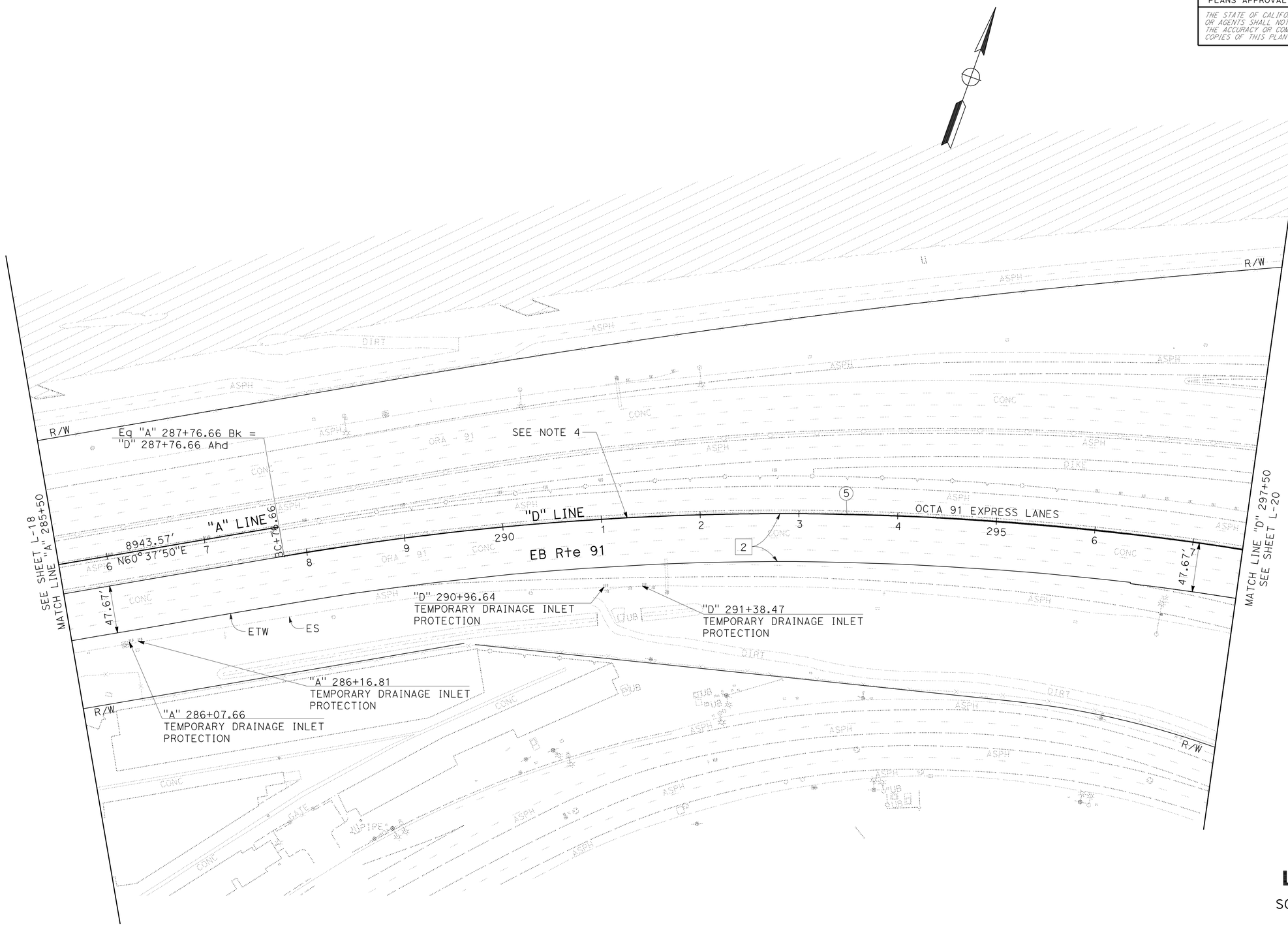

LAYOUT

SCALE: 1" = 50′

L-19

STATE OF CALIFORNIA - DEPARTMENT OF TRANSPORTATION
Caltrans®
DESIGN BRANCH B

FUNCTIONAL SUPERVISOR: LISA ALVISO

CALCULATED-DESIGNED BY: YENHAI NGUYEN
CHECKED BY: KEITH TA

REVISED BY: Y. NGUYEN
DATE REVISED: 04-14-10

LAST REVISION 04-14-10 | DATE PLOTTED => 27-JUL-2010 | TIME PLOTTED => 15:31

Dist	COUNTY	ROUTE	POST MILES TOTAL PROJECT	SHEET No.	TOTAL SHEETS
12	Ora	91	R9.2/R15.9	23	86

REGISTERED CIVIL ENGINEER 06-15-10 DATE

7-26-10
PLANS APPROVAL DATE

REGISTERED PROFESSIONAL ENGINEER
YENHAI M. NGUYEN
No. C62100
Exp. 9/30/11
CIVIL
STATE OF CALIFORNIA

THE STATE OF CALIFORNIA OR ITS OFFICERS OR AGENTS SHALL NOT BE RESPONSIBLE FOR THE ACCURACY OR COMPLETENESS OF SCANNED COPIES OF THIS PLAN SHEET.

NOTE:

1. FOR COMPLETE RIGHT OF WAY AND ACCURATE ACCESS DATA, CONTACT RIGHT OF WAY ENGINEERING AT THE DISTRICT OFFICE.

CURVE DATA

No.	R	Δ	T	L
5	3000′	24°29′55″	651.33′	1282.74′

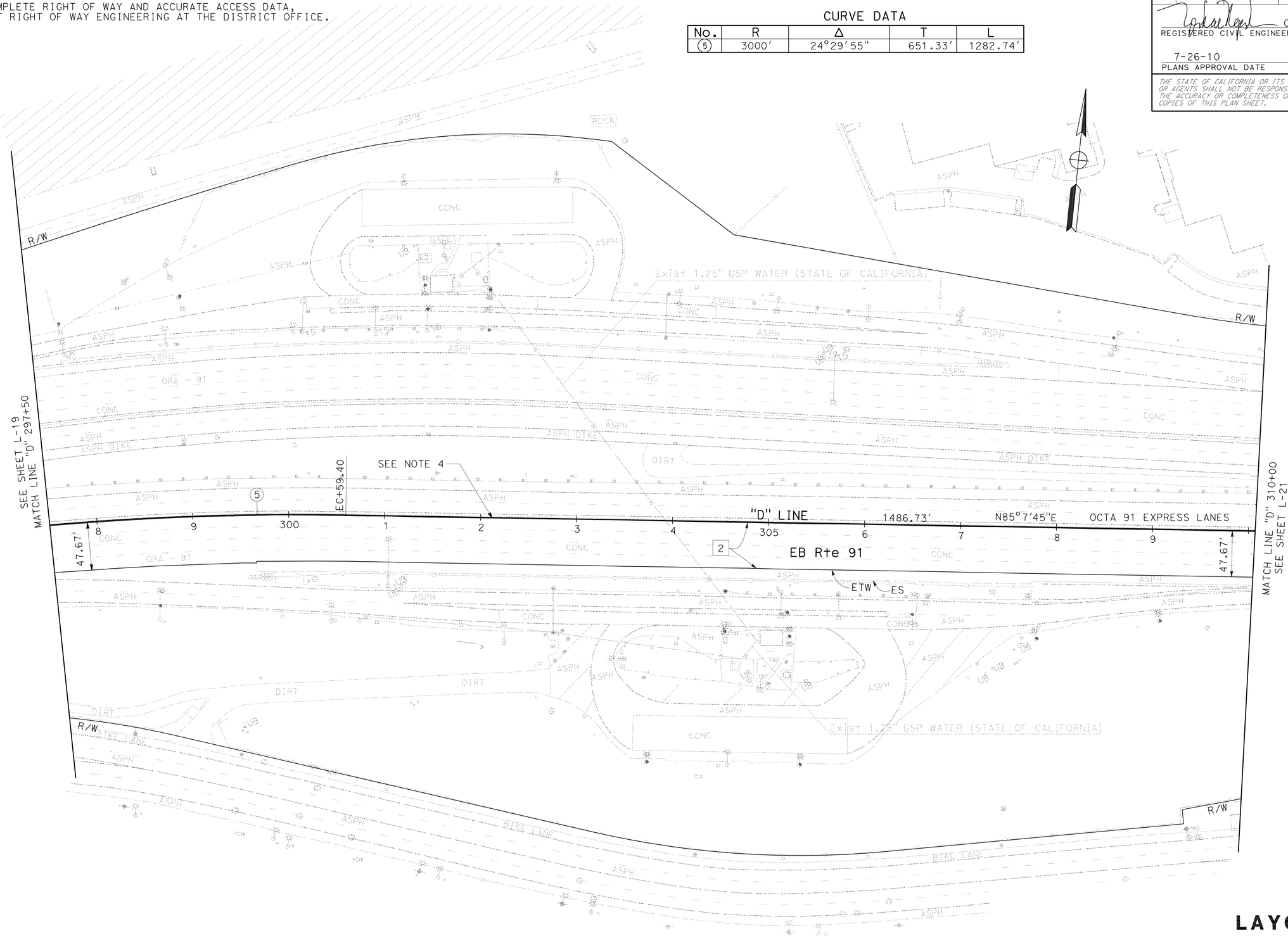

LAYOUT

SCALE: 1" = 50′

L-20

STATE OF CALIFORNIA - DEPARTMENT OF TRANSPORTATION
Caltrans
DESIGN BRANCH B

FUNCTIONAL SUPERVISOR: LISA ALVISO
CALCULATED-DESIGNED BY: YENHAI NGUYEN
CHECKED BY: KEITH TA
REVISED BY: Y. NGUYEN
DATE REVISED: 04-14-10

LAST REVISION 04-14-10
DATE PLOTTED => 27-JUL-2010
TIME PLOTTED => 15:31

Dist	COUNTY	ROUTE	POST MILES TOTAL PROJECT	SHEET No.	TOTAL SHEETS
12	Ora	91	R9.2/R15.9	24	86

06-15-10
REGISTERED CIVIL ENGINEER DATE

7-26-10
PLANS APPROVAL DATE

REGISTERED PROFESSIONAL ENGINEER
YENHAI M. NGUYEN
No. C62100
Exp. 9/30/11
CIVIL
STATE OF CALIFORNIA

THE STATE OF CALIFORNIA OR ITS OFFICERS OR AGENTS SHALL NOT BE RESPONSIBLE FOR THE ACCURACY OR COMPLETENESS OF SCANNED COPIES OF THIS PLAN SHEET.

NOTE:

1. FOR COMPLETE RIGHT OF WAY AND ACCURATE ACCESS DATA, CONTACT RIGHT OF WAY ENGINEERING AT THE DISTRICT OFFICE.

CURVE DATA

No.	R	Δ	T	L
6	8000.05′	4°15′34″	297.50′	594.73′

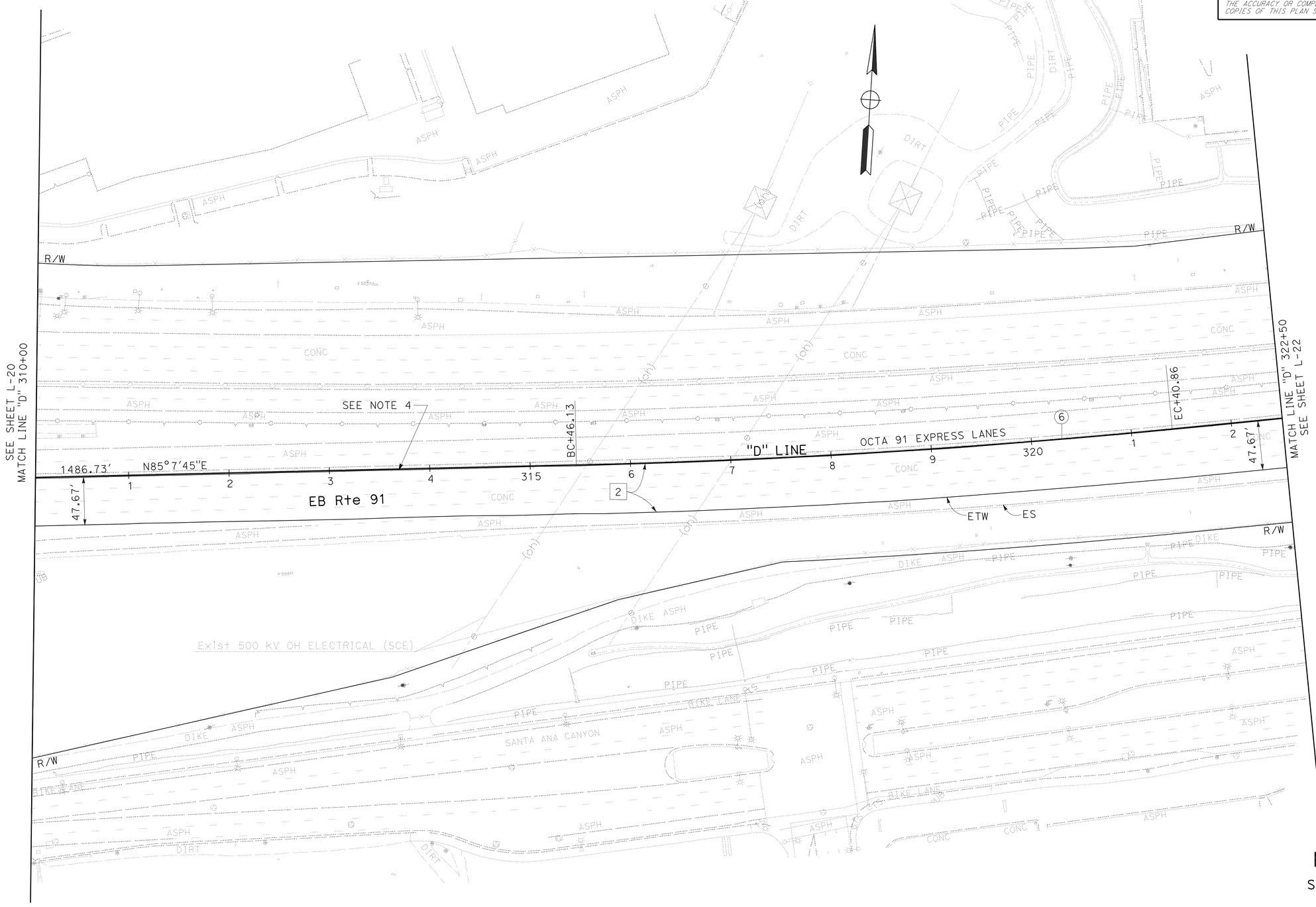

LAYOUT

SCALE: 1" = 50′

L-21

STATE OF CALIFORNIA - DEPARTMENT OF TRANSPORTATION
Caltrans
DESIGN BRANCH B

FUNCTIONAL SUPERVISOR: LISA ALVISO

CALCULATED-DESIGNED BY: YENHAI NGUYEN
CHECKED BY: KEITH TA

REVISED BY: Y. NGUYEN
DATE REVISED: 04-14-10

LAST REVISION DATE PLOTTED => 27-JUL-2010
TIME PLOTTED => 15:31

Dist	COUNTY	ROUTE	POST MILES TOTAL PROJECT	SHEET No.	TOTAL SHEETS
12	Ora	91	R9.2/R15.9	25	86

06-15-10
REGISTERED CIVIL ENGINEER DATE

7-26-10
PLANS APPROVAL DATE

REGISTERED PROFESSIONAL ENGINEER
YENHAI M. NGUYEN
No. C62100
Exp. 9/30/11
CIVIL
STATE OF CALIFORNIA

THE STATE OF CALIFORNIA OR ITS OFFICERS OR AGENTS SHALL NOT BE RESPONSIBLE FOR THE ACCURACY OR COMPLETENESS OF SCANNED COPIES OF THIS PLAN SHEET.

NOTE:

1. FOR COMPLETE RIGHT OF WAY AND ACCURATE ACCESS DATA, CONTACT RIGHT OF WAY ENGINEERING AT THE DISTRICT OFFICE.

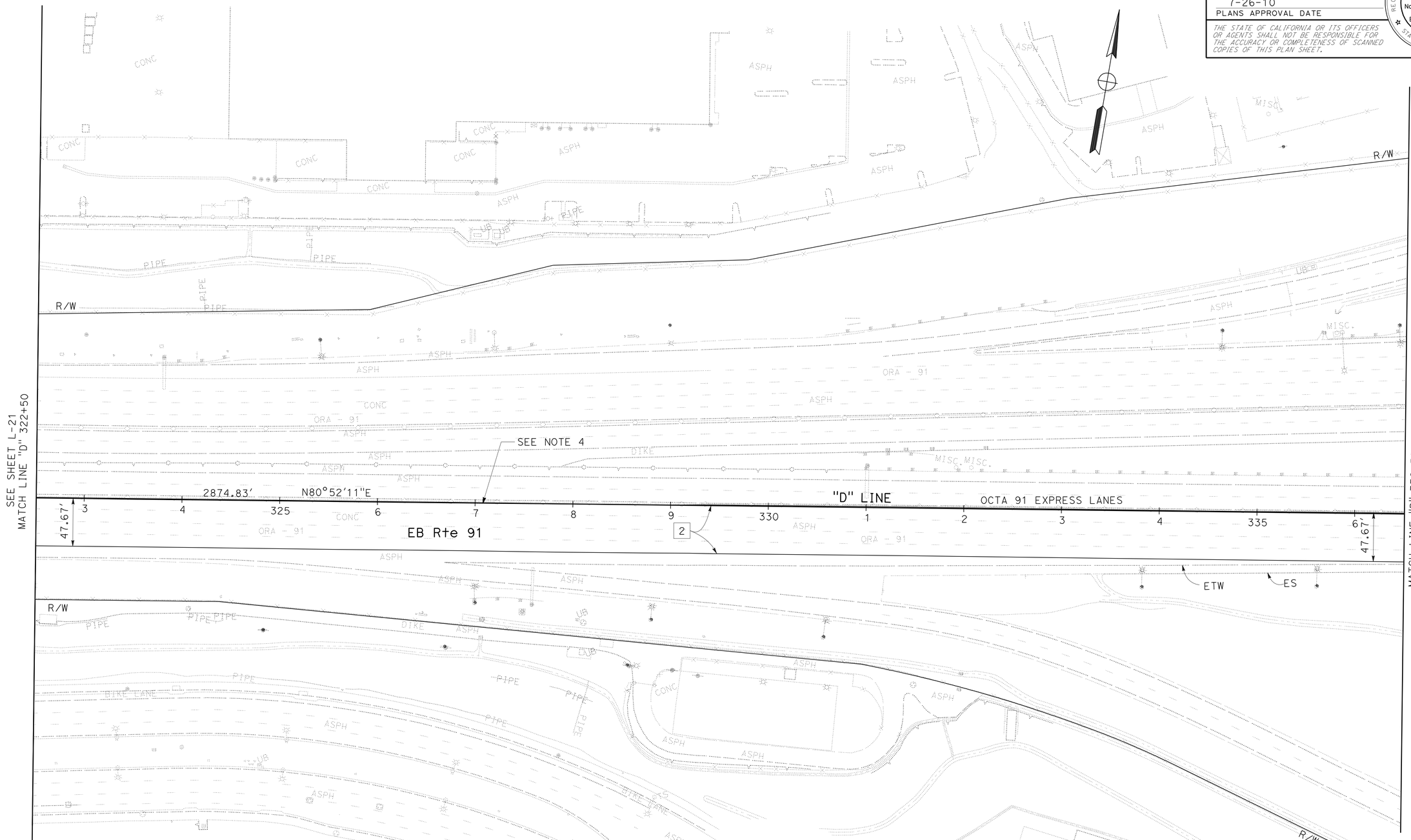

LAYOUT

SCALE: 1" = 50'

L-22

REVISED BY	DATE REVISED
Y. NGUYEN	04-14-10

YENHAI NGUYEN — CALCULATED-DESIGNED BY
KEITH TA — CHECKED BY
LISA ALVISO — FUNCTIONAL SUPERVISOR

STATE OF CALIFORNIA - DEPARTMENT OF TRANSPORTATION
Caltrans
DESIGN BRANCH B

LAST REVISION 04-14-10
DATE PLOTTED => 28-JUL-2010
TIME PLOTTED => 08:29

Dist	COUNTY	ROUTE	POST MILES TOTAL PROJECT	SHEET No.	TOTAL SHEETS
12	Ora	91	R9.2/R15.9	26	86

REGISTERED CIVIL ENGINEER 06-15-10 DATE

7-26-10
PLANS APPROVAL DATE

REGISTERED PROFESSIONAL ENGINEER
YENHAI M. NGUYEN
No. C62100
Exp. 9/30/11
CIVIL
STATE OF CALIFORNIA

THE STATE OF CALIFORNIA OR ITS OFFICERS OR AGENTS SHALL NOT BE RESPONSIBLE FOR THE ACCURACY OR COMPLETENESS OF SCANNED COPIES OF THIS PLAN SHEET.

NOTE:

1. FOR COMPLETE RIGHT OF WAY AND ACCURATE ACCESS DATA, CONTACT RIGHT OF WAY ENGINEERING AT THE DISTRICT OFFICE.

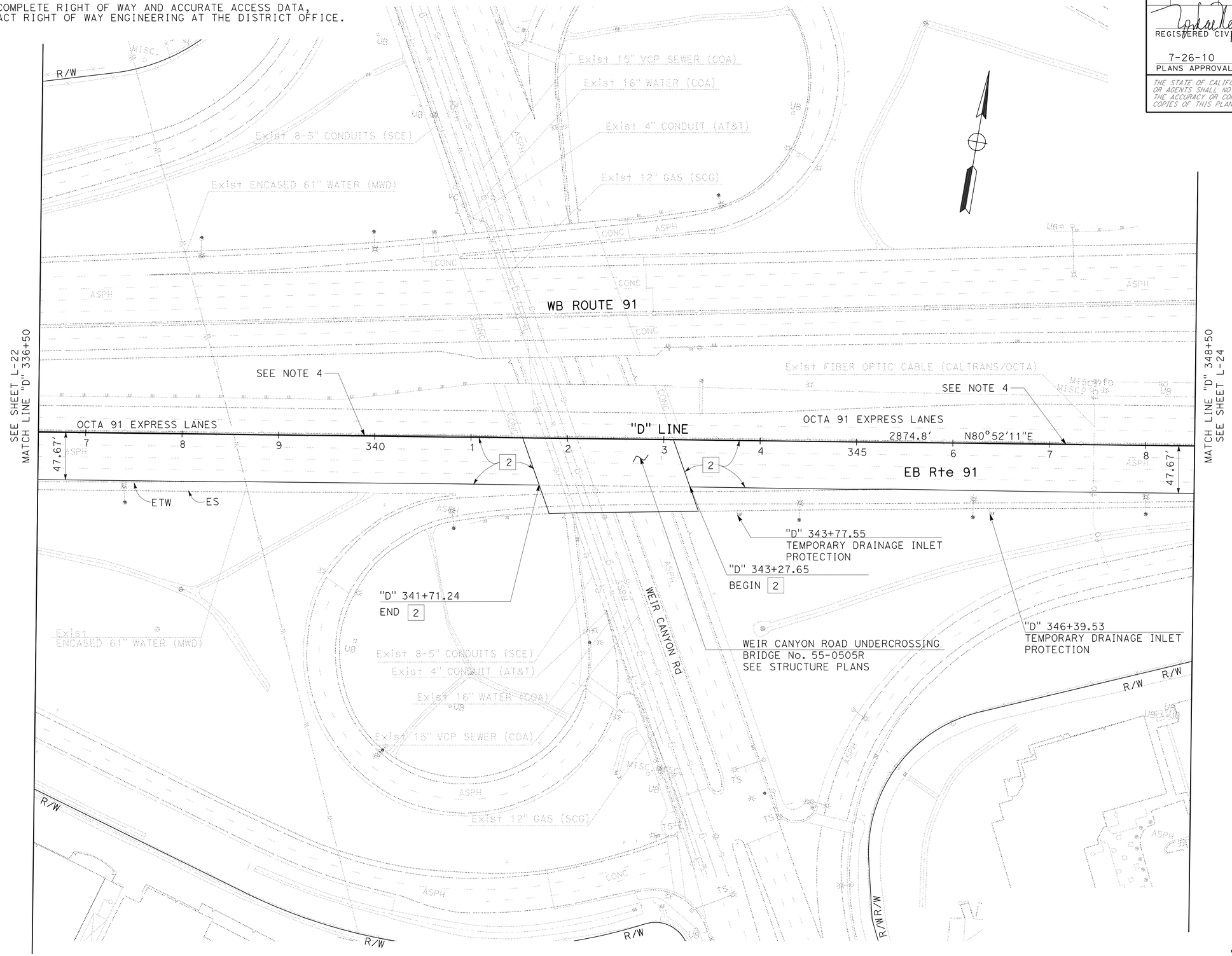

LAYOUT

SCALE: 1" = 50'

L-23

CALCULATED-DESIGNED BY	YENHAI NGUYEN
CHECKED BY	KEITH TA
REVISED BY	Y. NGUYEN
DATE REVISED	04-14-10
FUNCTIONAL SUPERVISOR	LISA ALVISO

STATE OF CALIFORNIA - DEPARTMENT OF TRANSPORTATION
Caltrans
DESIGN BRANCH B

LAST REVISION 04-14-10 | DATE PLOTTED => 27-JUL-2010 | TIME PLOTTED => 15:32

Dist	COUNTY	ROUTE	POST MILES TOTAL PROJECT	SHEET No.	TOTAL SHEETS
12	Ora	91	R9.2/R15.9	27	86

06-15-10
REGISTERED CIVIL ENGINEER DATE

7-26-10
PLANS APPROVAL DATE

REGISTERED PROFESSIONAL ENGINEER
YENHAI M. NGUYEN
No. C62100
Exp. 9/30/11
CIVIL
STATE OF CALIFORNIA

THE STATE OF CALIFORNIA OR ITS OFFICERS OR AGENTS SHALL NOT BE RESPONSIBLE FOR THE ACCURACY OR COMPLETENESS OF SCANNED COPIES OF THIS PLAN SHEET.

NOTE:

1. FOR COMPLETE RIGHT OF WAY AND ACCURATE ACCESS DATA, CONTACT RIGHT OF WAY ENGINEERING AT THE DISTRICT OFFICE.

CURVE DATA

No.	R	Δ	T	L
7	5000′	32°56′27″	1478.26′	2874.63′

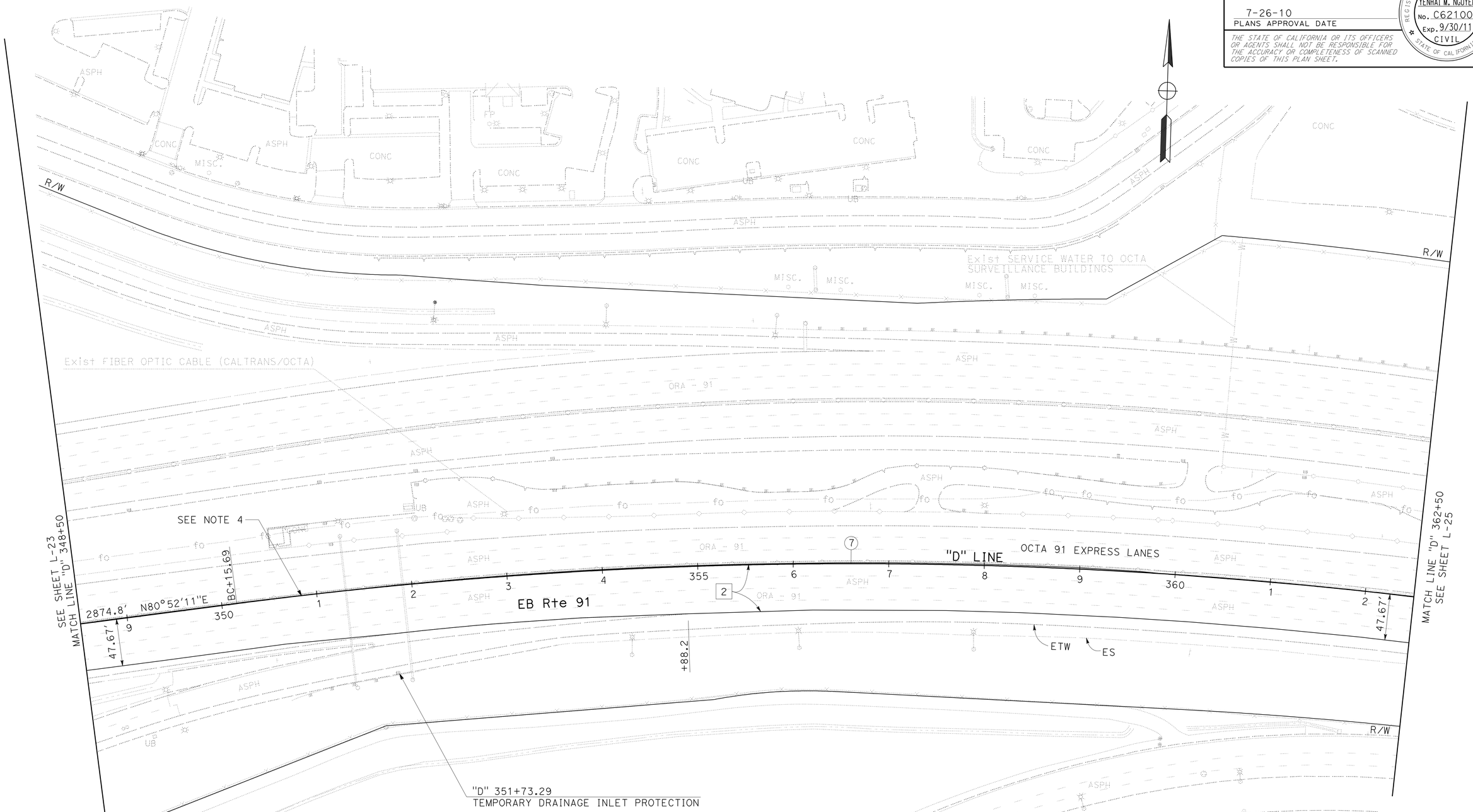

LAYOUT

SCALE: 1" = 50′

L-24

STATE OF CALIFORNIA - DEPARTMENT OF TRANSPORTATION
Caltrans
DESIGN BRANCH B

FUNCTIONAL SUPERVISOR: LISA ALVISO
CALCULATED-DESIGNED BY: YENHAI NGUYEN
CHECKED BY: KEITH TA
REVISED BY: Y. NGUYEN
DATE REVISED: 04-14-10

LAST REVISION 04-14-10 | DATE PLOTTED => 27-JUL-2010 | TIME PLOTTED => 15:32

Dist	COUNTY	ROUTE	POST MILES TOTAL PROJECT	SHEET No.	TOTAL SHEETS
12	Ora	91	R9.2/R15.9	28	86

06-15-10
REGISTERED CIVIL ENGINEER DATE

7-26-10
PLANS APPROVAL DATE

REGISTERED PROFESSIONAL ENGINEER
YENHAI M. NGUYEN
No. C62100
Exp. 9/30/11
CIVIL
STATE OF CALIFORNIA

THE STATE OF CALIFORNIA OR ITS OFFICERS OR AGENTS SHALL NOT BE RESPONSIBLE FOR THE ACCURACY OR COMPLETENESS OF SCANNED COPIES OF THIS PLAN SHEET.

NOTE:

1. FOR COMPLETE RIGHT OF WAY AND ACCURATE ACCESS DATA, CONTACT RIGHT OF WAY ENGINEERING AT THE DISTRICT OFFICE.

CURVE DATA

No.	R	Δ	T	L
7	5000′	32°56′27″	1478.26′	2874.63′

LAYOUT

SCALE: 1" = 50′

L-25

STATE OF CALIFORNIA - DEPARTMENT OF TRANSPORTATION
Caltrans
DESIGN BRANCH B

FUNCTIONAL SUPERVISOR: LISA ALVISO
CALCULATED-DESIGNED BY: YENHAI NGUYEN
CHECKED BY: KEITH TA
REVISED BY: Y. NGUYEN
DATE REVISED: 04-14-10

LAST REVISION 04-14-10 | DATE PLOTTED => 27-JUL-2010 | TIME PLOTTED => 15:32

BORDER LAST REVISED 4/11/2008 | RELATIVE BORDER SCALE IS IN INCHES 0 1 2 3 | USERNAME => trstrk | DGN FILE => f0K680ea025.dgn | CU 12221 | EA 0K6801

Dist	COUNTY	ROUTE	POST MILES TOTAL PROJECT	SHEET No.	TOTAL SHEETS
12	Ora	91	R9.2/R15.9	29	86

06-15-10
REGISTERED CIVIL ENGINEER DATE

7-26-10
PLANS APPROVAL DATE

REGISTERED PROFESSIONAL ENGINEER
YENHAI M. NGUYEN
No. C62100
Exp. 9/30/11
CIVIL
STATE OF CALIFORNIA

THE STATE OF CALIFORNIA OR ITS OFFICERS OR AGENTS SHALL NOT BE RESPONSIBLE FOR THE ACCURACY OR COMPLETENESS OF SCANNED COPIES OF THIS PLAN SHEET.

NOTE:

1. FOR COMPLETE RIGHT OF WAY AND ACCURATE ACCESS DATA, CONTACT RIGHT OF WAY ENGINEERING AT THE DISTRICT OFFICE.

CURVE DATA

No.	R	Δ	T	L
(7)	5000′	32°56′27″	1478.26′	2874.63′

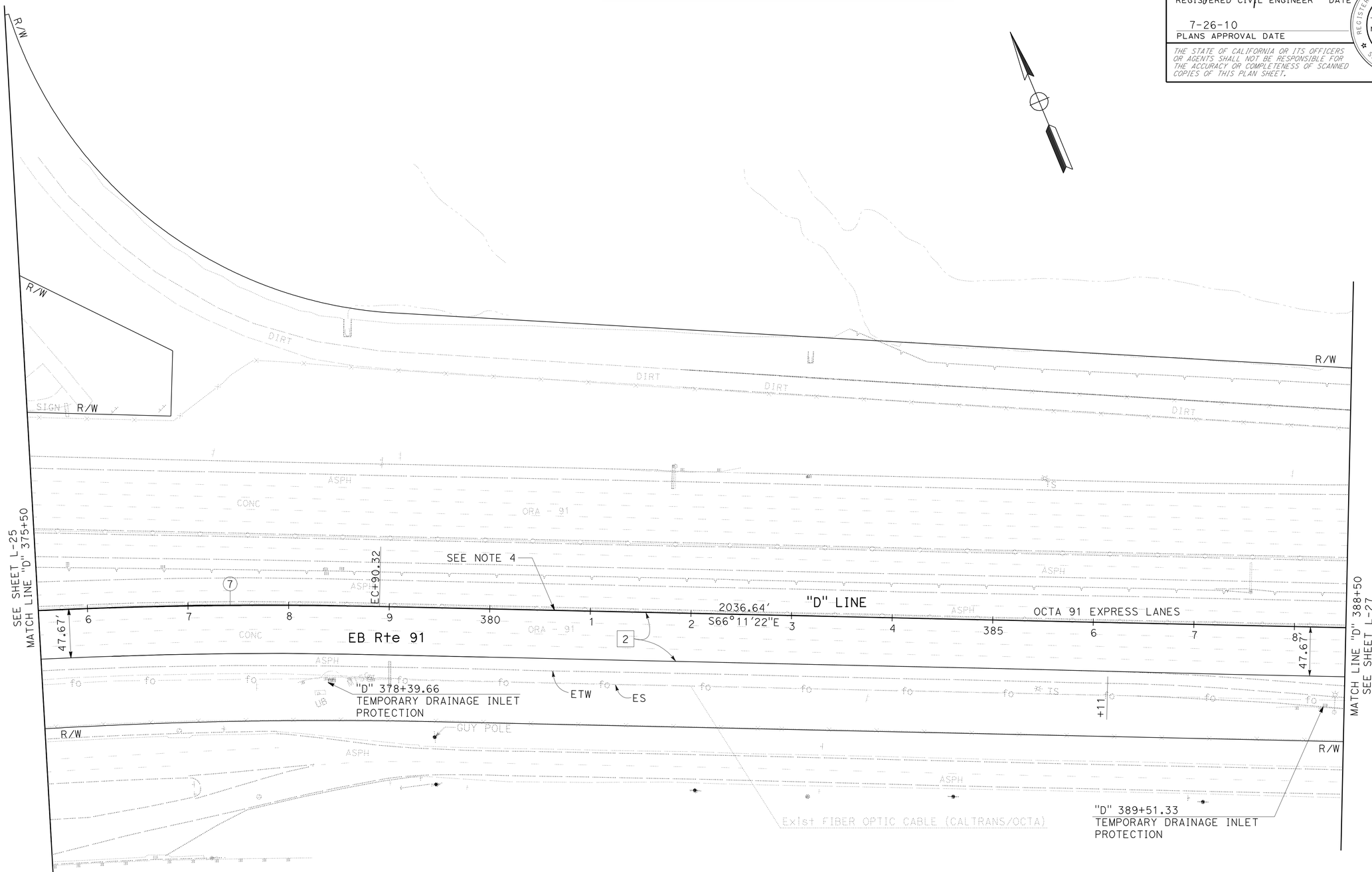

LAYOUT

SCALE: 1" = 50′

L-26

REVISED BY	DATE REVISED
Y. NGUYEN	04-14-10

CALCULATED-DESIGNED BY	CHECKED BY
YENHAI NGUYEN	KEITH TA

FUNCTIONAL SUPERVISOR: LISA ALVISO

STATE OF CALIFORNIA - DEPARTMENT OF TRANSPORTATION
Caltrans
DESIGN BRANCH B

LAST REVISION 04-14-10 | DATE PLOTTED => 27-JUL-2010 | TIME PLOTTED => 15:32

Dist	COUNTY	ROUTE	POST MILES TOTAL PROJECT	SHEET No.	TOTAL SHEETS
12	Ora	91	R9.2/R15.9	30	86

REGISTERED CIVIL ENGINEER 06-15-10 DATE

7-26-10
PLANS APPROVAL DATE

REGISTERED PROFESSIONAL ENGINEER
YENHAI M. NGUYEN
No. C62100
Exp. 9/30/11
CIVIL
STATE OF CALIFORNIA

THE STATE OF CALIFORNIA OR ITS OFFICERS OR AGENTS SHALL NOT BE RESPONSIBLE FOR THE ACCURACY OR COMPLETENESS OF SCANNED COPIES OF THIS PLAN SHEET.

NOTE:

1. FOR COMPLETE RIGHT OF WAY AND ACCURATE ACCESS DATA, CONTACT RIGHT OF WAY ENGINEERING AT THE DISTRICT OFFICE.

CURVE DATA

No.	R	Δ	T	L
8	3100′	16°12′13"	441.30′	876.70′

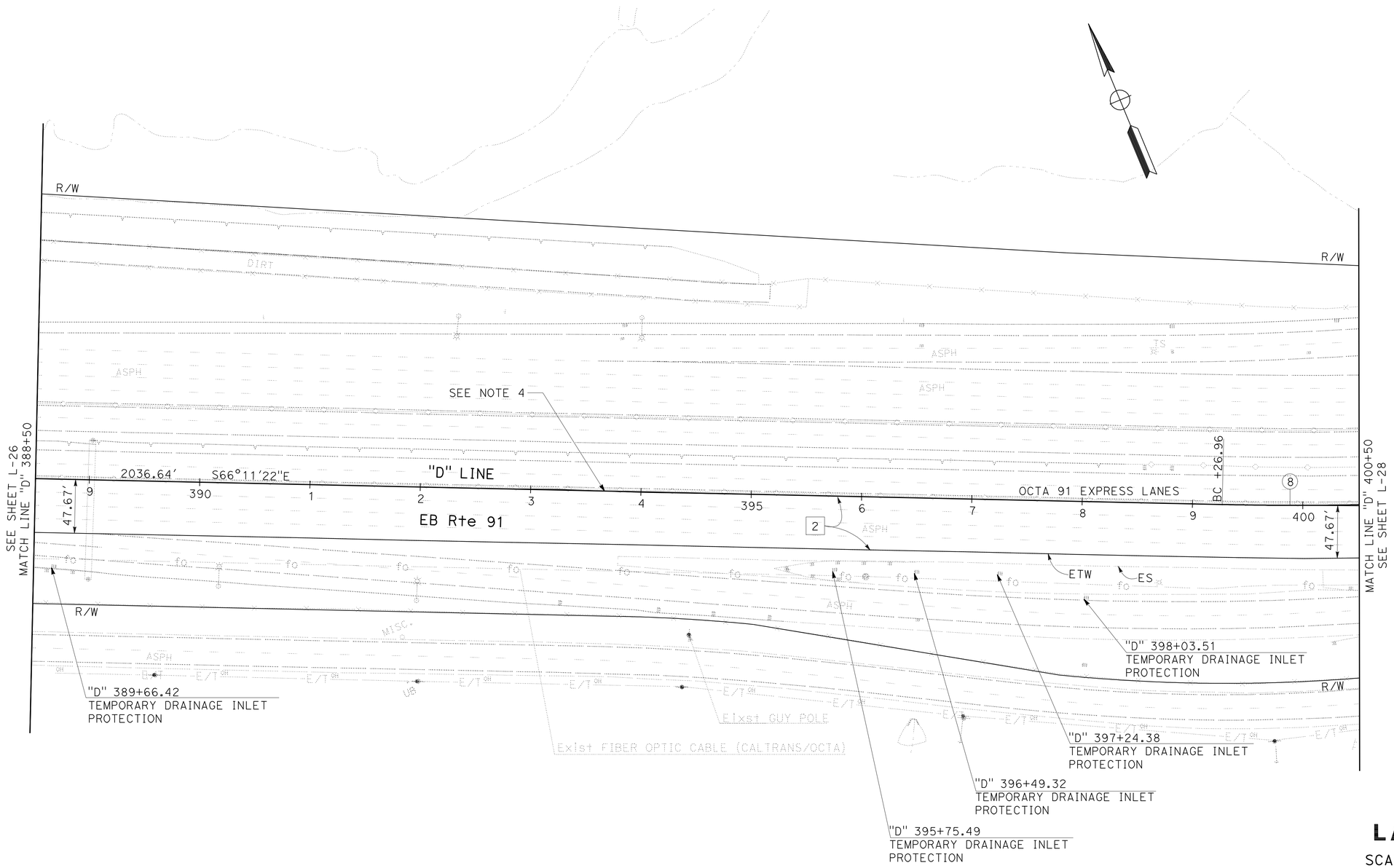

LAYOUT

SCALE: 1" = 50′

L-27

REVISED BY	Y. NGUYEN
DATE REVISED	04-14-10
CALCULATED-DESIGNED BY	YENHAI NGUYEN
CHECKED BY	KEITH TA
FUNCTIONAL SUPERVISOR	LISA ALVISO

STATE OF CALIFORNIA - DEPARTMENT OF TRANSPORTATION
Caltrans® DESIGN BRANCH B

LAST REVISION 04-14-10 | DATE PLOTTED => 27-JUL-2010 | TIME PLOTTED => 15:32

Dist	COUNTY	ROUTE	POST MILES TOTAL PROJECT	SHEET No.	TOTAL SHEETS
12	Ora	91	R9.2/R15.9	31	86

06-15-10
REGISTERED CIVIL ENGINEER DATE

7-26-10
PLANS APPROVAL DATE

REGISTERED PROFESSIONAL ENGINEER
YENHAI M. NGUYEN
No. C62100
Exp. 9/30/11
CIVIL
STATE OF CALIFORNIA

THE STATE OF CALIFORNIA OR ITS OFFICERS OR AGENTS SHALL NOT BE RESPONSIBLE FOR THE ACCURACY OR COMPLETENESS OF SCANNED COPIES OF THIS PLAN SHEET.

NOTE:

1. FOR COMPLETE RIGHT OF WAY AND ACCURATE ACCESS DATA, CONTACT RIGHT OF WAY ENGINEERING AT THE DISTRICT OFFICE.

CURVE DATA

No.	R	Δ	T	L
8	3100′	16°12′13″	441.30′	876.70′

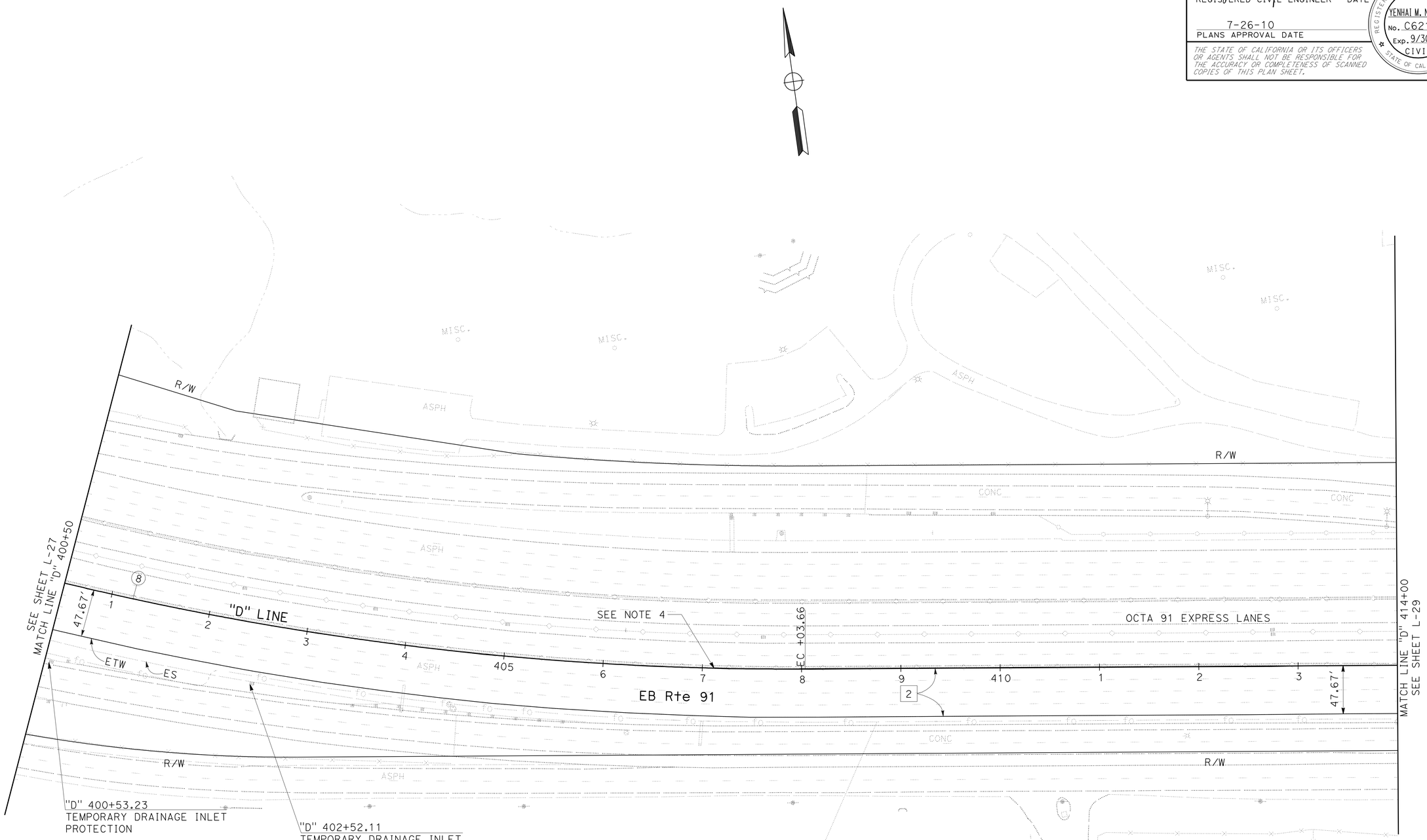

LAYOUT

SCALE: 1" = 50′

L-28

STATE OF CALIFORNIA - DEPARTMENT OF TRANSPORTATION
Caltrans®
DESIGN BRANCH B

FUNCTIONAL SUPERVISOR: LISA ALVISO
CALCULATED-DESIGNED BY: YENHAI NGUYEN
CHECKED BY: KEITH TA
REVISED BY: Y. NGUYEN
DATE REVISED: 04-14-10

LAST REVISION 04-14-10 | DATE PLOTTED => 27-JUL-2010 | TIME PLOTTED => 16:56

BORDER LAST REVISED 4/11/2008 | RELATIVE BORDER SCALE IS IN INCHES 0 1 2 3 | USERNAME => trlim | DGN FILE => f0K680ea028.dgn | CU 12221 | EA 0K6801

Dist	COUNTY	ROUTE	POST MILES TOTAL PROJECT	SHEET No.	TOTAL SHEETS
12	Ora	91	R9.2/R15.9	32	86

06-15-10
REGISTERED CIVIL ENGINEER DATE

7-26-10
PLANS APPROVAL DATE

REGISTERED PROFESSIONAL ENGINEER
YENHAI M. NGUYEN
No. C62100
Exp. 9/30/11
CIVIL
STATE OF CALIFORNIA

THE STATE OF CALIFORNIA OR ITS OFFICERS OR AGENTS SHALL NOT BE RESPONSIBLE FOR THE ACCURACY OR COMPLETENESS OF SCANNED COPIES OF THIS PLAN SHEET.

NOTE:

1. FOR COMPLETE RIGHT OF WAY AND ACCURATE ACCESS DATA, CONTACT RIGHT OF WAY ENGINEERING AT THE DISTRICT OFFICE.

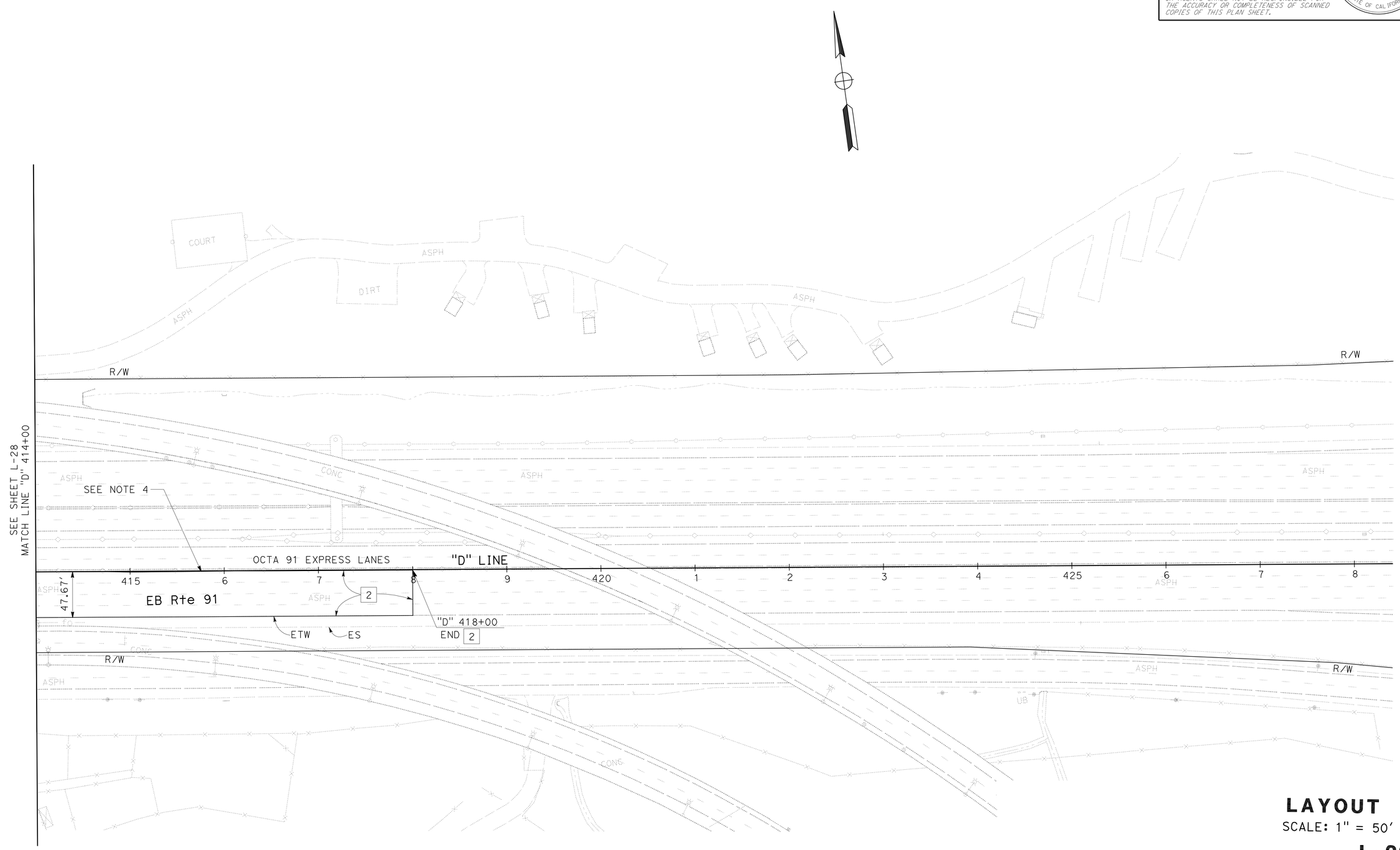

LAYOUT

SCALE: 1" = 50'

L-29

STATE OF CALIFORNIA - DEPARTMENT OF TRANSPORTATION
Caltrans
DESIGN BRANCH B

FUNCTIONAL SUPERVISOR: LISA ALVISO

CALCULATED-DESIGNED BY: YENHAI NGUYEN
CHECKED BY: KEITH TA

REVISED BY: Y. NGUYEN
DATE REVISED: 04-14-10

LAST REVISION: 04-14-10
DATE PLOTTED => 27-JUL-2010
TIME PLOTTED => 16:56

BORDER LAST REVISED 4/11/2008

RELATIVE BORDER SCALE IS IN INCHES 0 1 2 3

USERNAME => trlim
DGN FILE => f0K680ea029.dgn

CU 12221

EA 0K6801

Dist	COUNTY	ROUTE	POST MILES TOTAL PROJECT	SHEET No.	TOTAL SHEETS
12	Ora	91	R9.2/R15.9	33	86

06-15-10
REGISTERED CIVIL ENGINEER DATE

7-26-10
PLANS APPROVAL DATE

REGISTERED PROFESSIONAL ENGINEER
YENHAI M. NGUYEN
No. C62100
Exp. 9/30/11
CIVIL
STATE OF CALIFORNIA

THE STATE OF CALIFORNIA OR ITS OFFICERS OR AGENTS SHALL NOT BE RESPONSIBLE FOR THE ACCURACY OR COMPLETENESS OF SCANNED COPIES OF THIS PLAN SHEET.

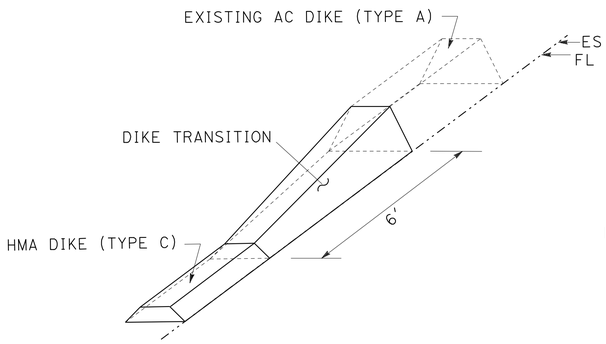

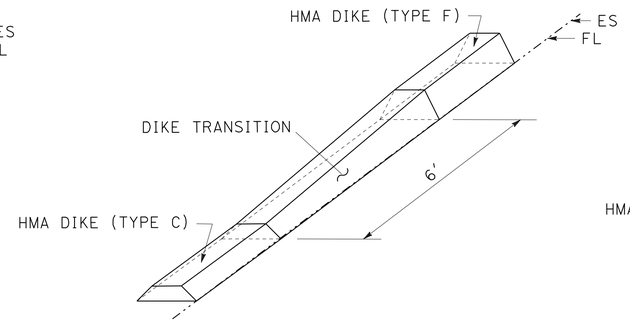

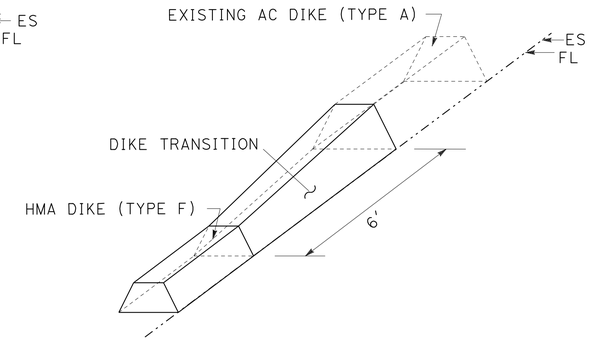

NOTE:

1. FOR ADDITIONAL DIKE DETAILS NOT SHOWN, SEE STANDARD PLANS DETAIL A87B.

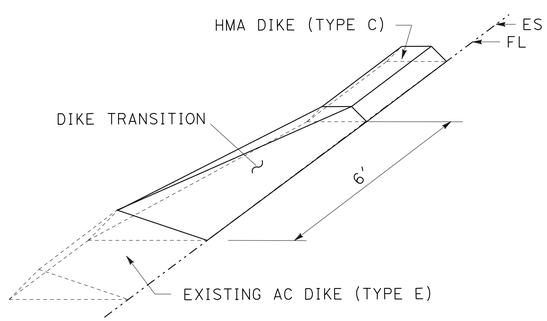

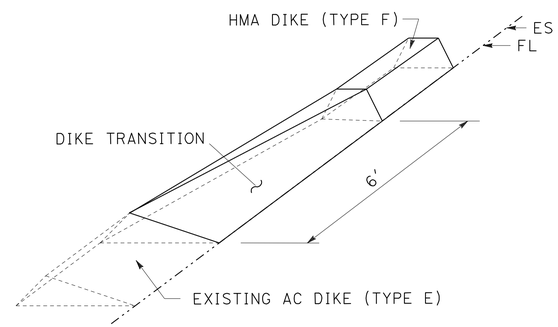

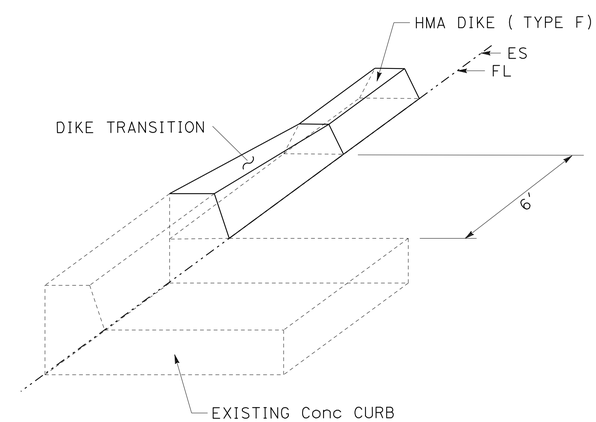

CURB AND DIKE TRANSITIONS

CONSTRUCTION DETAILS

NO SCALE

C-1

REVISED BY	DATE REVISED
Y. NGUYEN	04-14-10

CALCULATED-DESIGNED BY	CHECKED BY
YENHAI NGUYEN	KEITH TA

FUNCTIONAL SUPERVISOR: LISA ALVISO

STATE OF CALIFORNIA - DEPARTMENT OF TRANSPORTATION
Caltrans® DESIGN BRANCH B

LAST REVISION 04-14-10
DATE PLOTTED => 27-JUL-2010
TIME PLOTTED => 16:56

Dist	COUNTY	ROUTE	POST MILES TOTAL PROJECT	SHEET No.	TOTAL SHEETS
12	Ora	91	R9.2/R15.9	34	86

REGISTERED CIVIL ENGINEER 06-15-10 DATE

7-26-10
PLANS APPROVAL DATE

REGISTERED PROFESSIONAL ENGINEER
YENHAI M. NGUYEN
No. C62100
Exp. 9/30/11
CIVIL
STATE OF CALIFORNIA

THE STATE OF CALIFORNIA OR ITS OFFICERS OR AGENTS SHALL NOT BE RESPONSIBLE FOR THE ACCURACY OR COMPLETENESS OF SCANNED COPIES OF THIS PLAN SHEET.

STATIONARY MOUNTED CONSTRUCTION AREA SIGNS

SIGN No. ◯	SIGN CODE	SIGN MESSAGE	PANEL SIZE (in x in))	No. OF POST AND SIZE (in x in)	No. OF SIGNS (EA)
(A)	W20-1	ROAD WORK AHEAD	48x48	1-6x6	6
(B)	W20-1	ROAD WORK AHEAD	72x72	2-6x6	1
(C)	G20-2	END ROAD WORK	48x48	1-6x6	4

NOTES:

1. LOCATIONS OF CONSTRUCTION AREA SIGNS ARE APPROXIMATE, EXACT LOCATIONS TO BE DETERMINED BY THE ENGINEER.
2. FOR ADDITIONAL QUANTITIES OF CONSTRUCTION AREA SIGNS, SEE SHEET THQ-1

LEGEND:

CONSTRUCTION AREA SIGN 1 POST, STATIONARY MOUNTED

CONSTRUCTION AREA SIGN 2 POST, STATIONARY MOUNTED

◯ CONSTRUCTION AREA SIGN No.

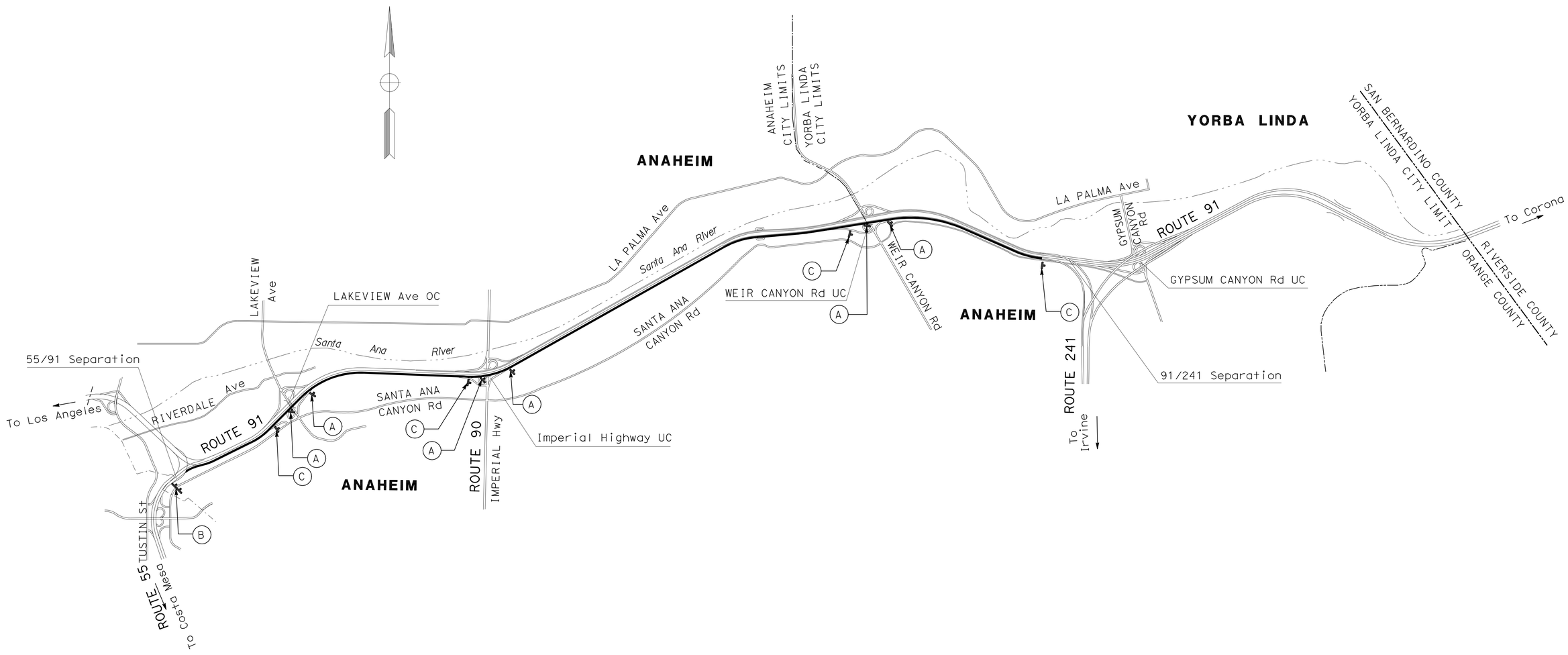

CONSTRUCTION AREA SIGNS

NO SCALE

CS-1

THIS PLAN ACCURATE FOR CONSTRUCTION AREA SIGNS WORK ONLY.

STATE OF CALIFORNIA - DEPARTMENT OF TRANSPORTATION
Caltrans
DESIGN BRANCH B

FUNCTIONAL SUPERVISOR: LISA ALVISO
CALCULATED-DESIGNED BY: YENHAI NGUYEN
CHECKED BY: KEITH TA
REVISED BY: Y. NGUYEN
DATE REVISED: 04-14-10

LAST REVISION 04-14-10
DATE PLOTTED => 27-JUL-2010
TIME PLOTTED => 16:56

BORDER LAST REVISED 4/11/2008
RELATIVE BORDER SCALE IS IN INCHES 0 1 2 3
USERNAME => trlim
DGN FILE => f0K6801a001.dgn
CU 12221
EA 0K6801

Dist	COUNTY	ROUTE	POST MILES TOTAL PROJECT	SHEET No.	TOTAL SHEETS
12	Ora	91	R9.2/R15.9	35	86

REGISTERED CIVIL ENGINEER 06-15-10 DATE

7-26-10
PLANS APPROVAL DATE

REGISTERED PROFESSIONAL ENGINEER
YENHAI M. NGUYEN
No. C62100
Exp. 9/30/11
CIVIL
STATE OF CALIFORNIA

THE STATE OF CALIFORNIA OR ITS OFFICERS OR AGENTS SHALL NOT BE RESPONSIBLE FOR THE ACCURACY OR COMPLETENESS OF SCANNED COPIES OF THIS PLAN SHEET.

NOTE:

1. LOCATIONS OF CONSTRUCTION AREA SIGNS AND PCMS SHOWN ARE APPROXIMATE. EXACT SIGN LOCATIONS AND MESSAGE ON PCMS TO BE DETERMINED BY THE ENGINEER.

LEGENDS:

- → DIRECTION OF TRAFFIC
- (X) CONSTRUCTION AREA (DETOUR) No., SEE SHEET THD-1
- PCMS-1 PORTABLE CHANGEABLE MESSAGE SIGN (PCMS)
- CONSTRUCTION AREA SIGN 1 POST, STATIONARY MOUNTED
- ——— RAMP OR CONNECTOR CLOSURE

ABBREVIATIONS:

PCMS: PORTABLE CHANGEABLE MESSAGE SIGN

CLOSURE:

EB ROUTE 91 LAKEVIEW Ave OFF-RAMP

DETOUR:

EB ROUTE 91 ROUTE 90 (IMPERIAL Hwy) OFF RAMP
TO NB ROUTE 90 (IMPERIAL Hwy)
TO WB LA PALMA Ave TO LAKEVIEW Ave.

PORTABLE CHANGEABLE MESSAGE SIGN

PCMS No.	MESSAGE	
	1ST FRAME	2ND FRAME
PCMS-1	LAKEVIEW Ave EXIST CLOSED	USE IMPERIAL Hwy EXIT
PCMS-2	LAKEVIEW Ave EXIST CLOSED	USE IMPERIAL Hwy EXIT

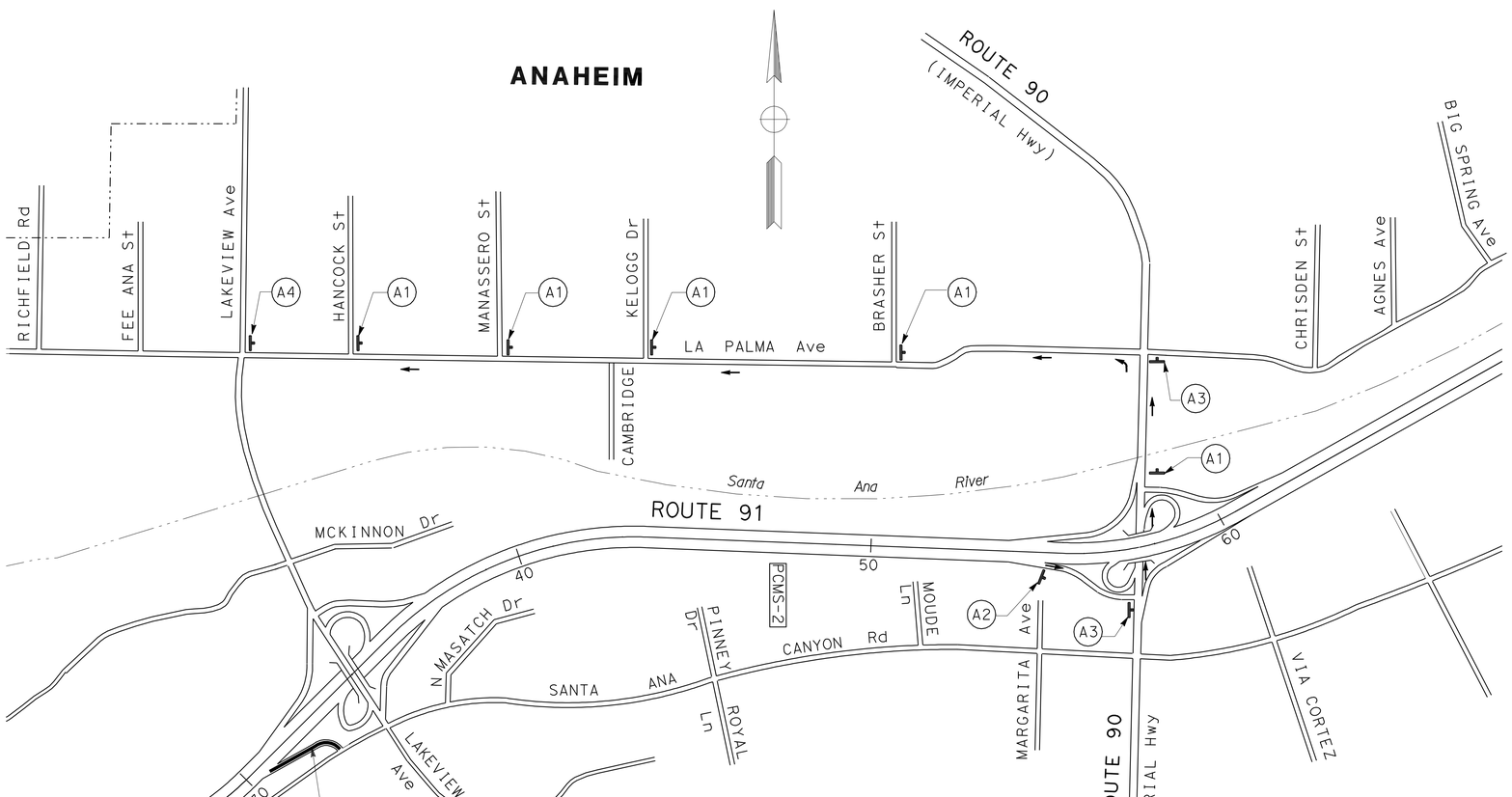

THIS PLAN ACCURATE FOR TRAFFIC HANDLING (DETOUR) WORK ONLY

TRAFFIC HANDLING PLAN
(DETOUR)

EASTBOUND ROUTE 91
LAKEVIEW Ave OFF RAMP CLOSURE

NO SCALE

TH-1

STATE OF CALIFORNIA - DEPARTMENT OF TRANSPORTATION
Caltrans® DESIGN BRANCH B

FUNCTIONAL SUPERVISOR: LISA ALVISO
CALCULATED-DESIGNED BY: YENHAI NGUYEN
CHECKED BY: KEITH TA
REVISED BY: Y. NGUYEN
DATE REVISED: 04-14-10

LAST REVISION 04-14-10 | DATE PLOTTED => 27-JUL-2010 | TIME PLOTTED => 16:56

BORDER LAST REVISED 4/11/2008 | RELATIVE BORDER SCALE IS IN INCHES 0 1 2 3 | USERNAME => trlim | DGN FILE => f0K680md001.dgn | CU 12221 | EA 0K6801

Dist	COUNTY	ROUTE	POST MILES TOTAL PROJECT	SHEET No.	TOTAL SHEETS
12	Ora	91	R9.2/R15.9	36	86

REGISTERED CIVIL ENGINEER 06-15-10 DATE

7-26-10
PLANS APPROVAL DATE

REGISTERED PROFESSIONAL ENGINEER
YENHAI M. NGUYEN
No. C62100
Exp. 9/30/11
CIVIL
STATE OF CALIFORNIA

THE STATE OF CALIFORNIA OR ITS OFFICERS OR AGENTS SHALL NOT BE RESPONSIBLE FOR THE ACCURACY OR COMPLETENESS OF SCANNED COPIES OF THIS PLAN SHEET.

CLOSURE:
EB ROUTE 91 LAKEVIEW Ave ON-RAMP

DETOUR:
SB LAKEVIEW Ave TO EB LA PALMA Ave TO SB ROUTE 90 (IMPERIAL HIGHWAY) TO EB ROUTE 91
NB LAKEVIEW Ave TO EB SANTA ANA CANYON Rd TO NB ROUTE 90 (IMPERIAL HIGHWAY) TO EB ROUTE 91

PORTABLE CHANGEABLE MESSAGE SIGN

PCMS No.	MESSAGE	
	1ST FRAME	2ND FRAME
PCMS-3	LAKEVIEW Ave ON RAMP TO EB 91 CLOSED	USE IMPERIAL Hwy ON RAMPS
PCMS-4	LAKEVIEW Ave ON RAMP TO EB 91 CLOSED	USE IMPERIAL Hwy ON RAMPS
PCMS-5	LAKEVIEW Ave ON RAMP TO EB 91 CLOSED	USE IMPERIAL Hwy ON RAMPS
PCMS-6	LAKEVIEW Ave ON RAMP TO EB 91 CLOSED	USE IMPERIAL Hwy ON RAMPS

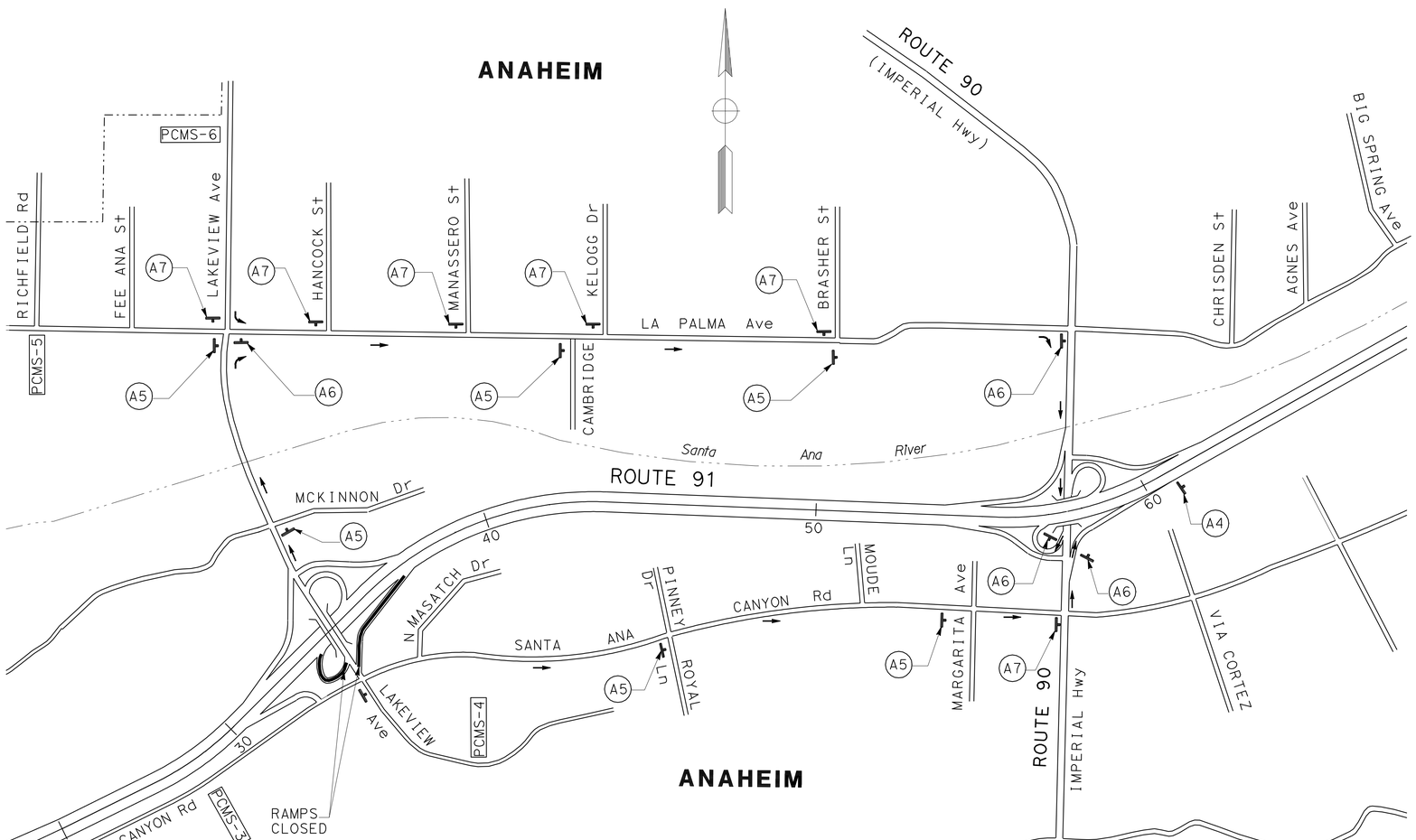

THIS PLAN ACCURATE FOR TRAFFIC HANDLING (DETOUR) WORK ONLY

TRAFFIC HANDLING PLAN
(DETOUR)

EASTBOUND ROUTE 91
LAKEVIEW Ave ON RAMPS CLOSURE

NO SCALE

TH-2

STATE OF CALIFORNIA - DEPARTMENT OF TRANSPORTATION
Caltrans® DESIGN BRANCH B

FUNCTIONAL SUPERVISOR: LISA ALVISO
CALCULATED-DESIGNED BY: YENHAI NGUYEN
CHECKED BY: KEITH TA
REVISED BY: Y. NGUYEN
DATE REVISED: 04-14-10

LAST REVISION 04-14-10
DATE PLOTTED => 28-JUL-2010
TIME PLOTTED => 08:16

BORDER LAST REVISED 4/11/2008
RELATIVE BORDER SCALE IS IN INCHES 0 1 2 3
USERNAME => trmnguye
DGN FILE => f0K680md002.dgn
CU 12221
EA 0K6801

Dist	COUNTY	ROUTE	POST MILES TOTAL PROJECT	SHEET No.	TOTAL SHEETS
12	Ora	91	R9.2/R15.9	37	86

06-15-10
REGISTERED CIVIL ENGINEER DATE

7-26-10
PLANS APPROVAL DATE

REGISTERED PROFESSIONAL ENGINEER
YENHAI M. NGUYEN
No. C62100
Exp. 9/30/11
CIVIL
STATE OF CALIFORNIA

THE STATE OF CALIFORNIA OR ITS OFFICERS OR AGENTS SHALL NOT BE RESPONSIBLE FOR THE ACCURACY OR COMPLETENESS OF SCANNED COPIES OF THIS PLAN SHEET.

CLOSURE:
EB ROUTE 91 ROUTE 90 (IMPERIAL Hwy) OFF RAMP

DETOUR:
NB YORBA LINDA Blvd / WEIR CANYON Rd TO WB LA PALMA Ave TO ROUTE 90 (IMPERIAL Hwy)
LAKEVIEW Ave OFF RAMP TO EB SANTA ANA CANYON Rd TO ROUTE 90 (IMPERIAL Hwy)

PORTABLE CHANGEABLE MESSAGE SIGN

PCMS No.	MESSAGE	
	1ST FRAME	2ND FRAME
PCMS-7	IMPERIAL Hwy EXIST CLOSED	USE LAKEVIEW Ave EXIT
PCMS-8	IMPERIAL Hwy EXIST CLOSED	USE WEIR CANYON Rd EXIT

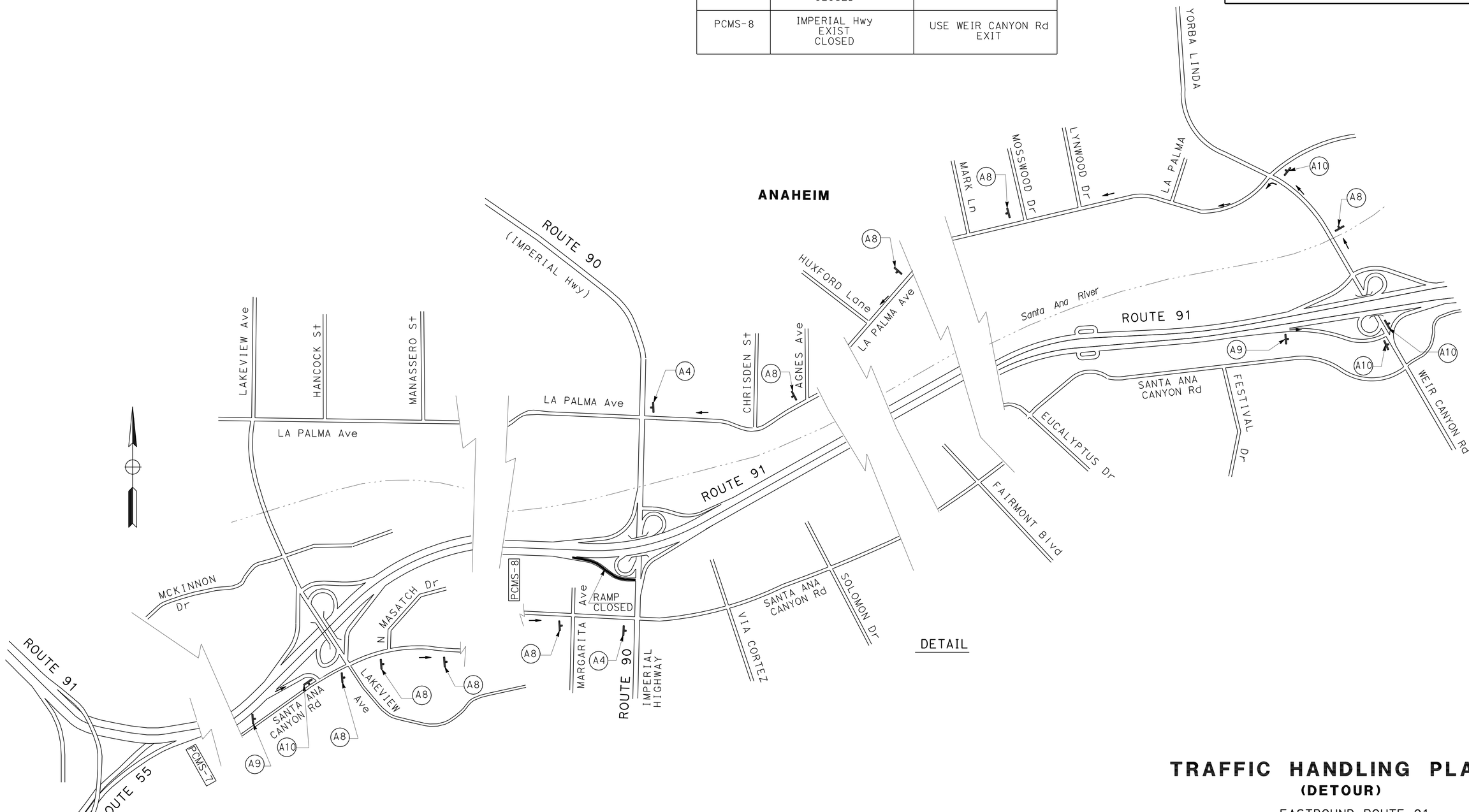

TRAFFIC HANDLING PLAN
(DETOUR)

EASTBOUND ROUTE 91
ROUTE 90 (IMPERIAL HIGHWAY)
OFF RAMP CLOSURE

NO SCALE **TH-3**

THIS PLAN ACCURATE FOR TRAFFIC HANDLING (DETOUR) WORK ONLY

STATE OF CALIFORNIA - DEPARTMENT OF TRANSPORTATION
Caltrans
DESIGN BRANCH B

FUNCTIONAL SUPERVISOR: LISA ALVISO
CALCULATED-DESIGNED BY: YENHAI NGUYEN
CHECKED BY: KEITH TA
REVISED BY: Y. NGUYEN
DATE REVISED: 04-14-10

LAST REVISION 04-14-10
DATE PLOTTED => 27-JUL-2010
TIME PLOTTED => 16:57

BORDER LAST REVISED 4/11/2008
RELATIVE BORDER SCALE IS IN INCHES 0 1 2 3
USERNAME => trlim
DGN FILE => f0K680md003.dgn
CU 12221
EA 0K6801

Dist	COUNTY	ROUTE	POST MILES TOTAL PROJECT	SHEET No.	TOTAL SHEETS
12	Ora	91	R9.2/R15.9	38	86

06-15-10
REGISTERED CIVIL ENGINEER DATE

7-26-10
PLANS APPROVAL DATE

REGISTERED PROFESSIONAL ENGINEER
YENHAI M. NGUYEN
No. C62100
Exp. 9/30/11
CIVIL
STATE OF CALIFORNIA

THE STATE OF CALIFORNIA OR ITS OFFICERS OR AGENTS SHALL NOT BE RESPONSIBLE FOR THE ACCURACY OR COMPLETENESS OF SCANNED COPIES OF THIS PLAN SHEET.

CLOSURE:

EB ROUTE 91 ROUTE 90 (IMPERIAL HIGHWAY) ON RAMPS

DETOUR:

SB ROUTE 90 (IMPERIAL HIGHWAY) TO EB LA PALMA Ave TO SB WEIR CANYON Rd TO EB ROUTE 91

NB ROUTE 90 (IMPERIAL HIGHWAY) TO EB SANTA ANA CANYON Rd TO NB WEIR CANYON Rd TO EB ROUTE 91

PORTABLE CHANGEABLE MESSAGE SIGN

PCMS No.	MESSAGE	
	1ST FRAME	2ND FRAME
PCMS-9	IMPERIAL Hwy ON RAMP TO EB 91 CLOSED	USE WEIR CANYON Rd ON RAMPS
PCMS-10	IMPERIAL Hwy ON RAMP TO EB 91 CLOSED	USE WEIR CANYON Rd ON RAMPS
PCMS-11	IMPERIAL Hwy ON RAMP TO EB 91 CLOSED	USE WEIR CANYON Rd ON RAMPS
PCMS-12	IMPERIAL Hwy ON RAMP TO EB 91 CLOSED	USE WEIR CANYON Rd ON RAMPS

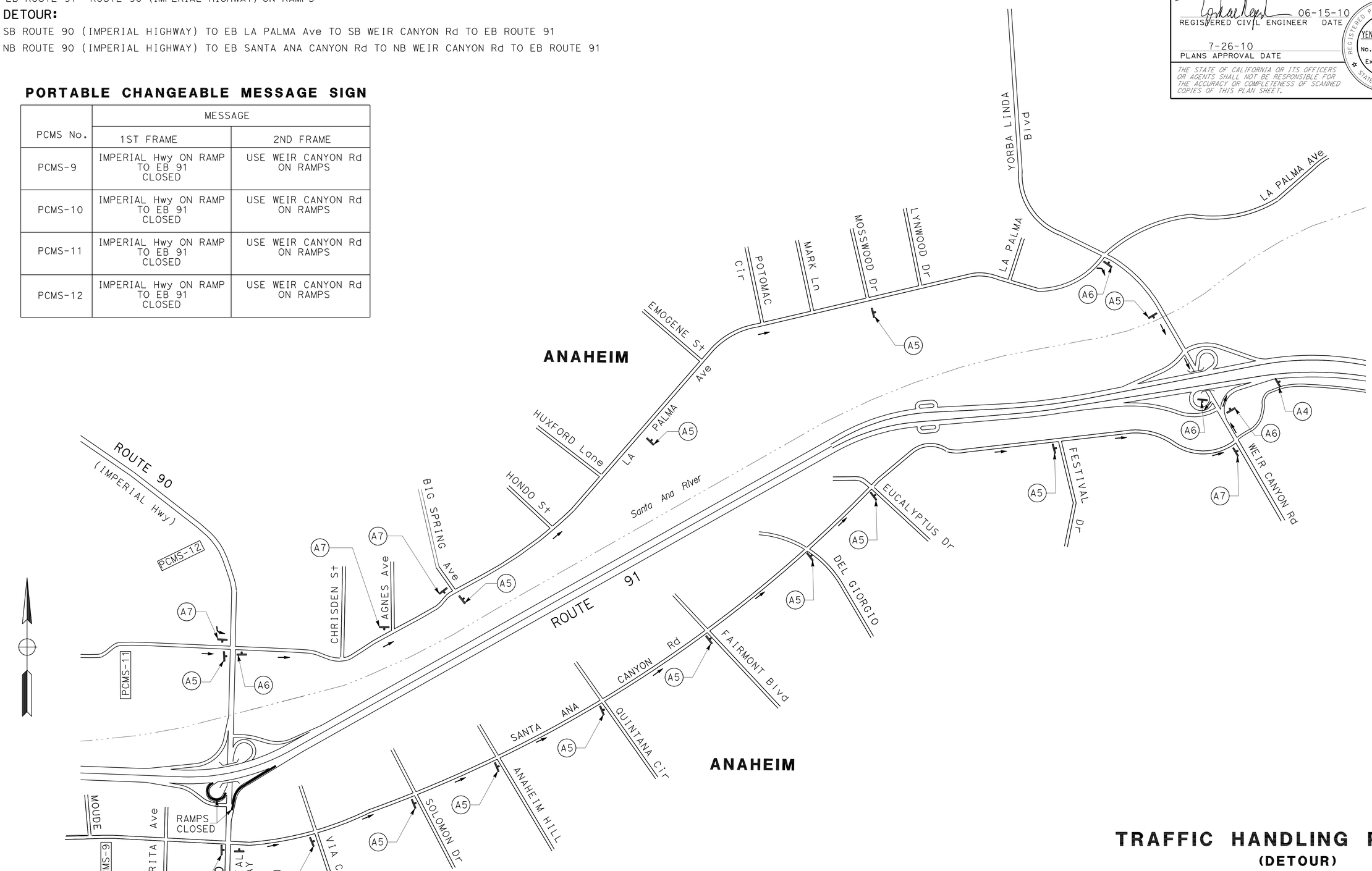

THIS PLAN ACCURATE FOR TRAFFIC HANDLING (DETOUR) WORK ONLY

TRAFFIC HANDLING PLAN
(DETOUR)

EASTBOUND ROUTE 91
ROUTE 90 (IMPERIAL HIGHWAY)
ON RAMPS CLOSURE

NO SCALE **TH-4**

STATE OF CALIFORNIA - DEPARTMENT OF TRANSPORTATION
Caltrans® DESIGN BRANCH B

FUNCTIONAL SUPERVISOR	LISA ALVISO
CALCULATED-DESIGNED BY	YENHAI NGUYEN
CHECKED BY	KEITH TA
REVISED BY	Y. NGUYEN
DATE REVISED	04-14-10

LAST REVISION 04-14-10
DATE PLOTTED => 27-JUL-2010
TIME PLOTTED => 16:57

Dist	COUNTY	ROUTE	POST MILES TOTAL PROJECT	SHEET No.	TOTAL SHEETS
12	Ora	91	R9.2/R15.9	39	86

REGISTERED CIVIL ENGINEER 06-15-10 DATE

7-26-10
PLANS APPROVAL DATE

REGISTERED PROFESSIONAL ENGINEER
YENHAI M. NGUYEN
No. C62100
Exp. 9/30/11
CIVIL
STATE OF CALIFORNIA

THE STATE OF CALIFORNIA OR ITS OFFICERS OR AGENTS SHALL NOT BE RESPONSIBLE FOR THE ACCURACY OR COMPLETENESS OF SCANNED COPIES OF THIS PLAN SHEET.

PORTABLE CHANGEABLE MESSAGE SIGN

PCMS No.	MESSAGE	
	1ST FRAME	2ND FRAME
PCMS-13	WEIR CANYON Rd EXIST CLOSED	USE GYPSUM CANYON Rd EXIT
PCMS-14	WEIR CANYON Rd EXIST CLOSED	USE GYPSUM CANYON Rd EXIT

CLOSURE:
EB ROUTE 91 WEIR CANYON Rd OFF RAMP

DETOUR:
NB GYPSUM CANYON Rd TO WB LA PALMA Ave TO WEIR CANYON Rd

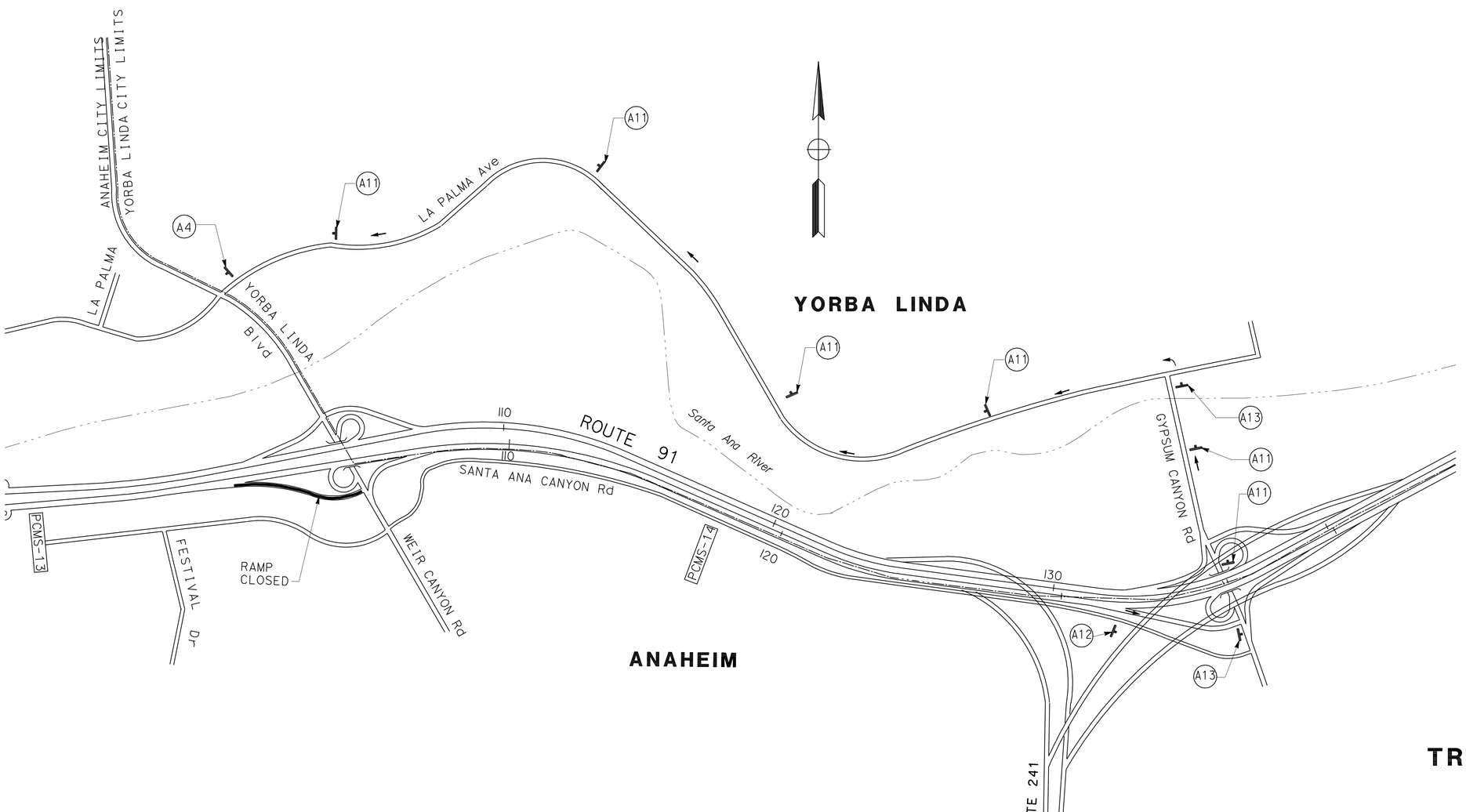

THIS PLAN ACCURATE FOR TRAFFIC HANDLING (DETOUR) WORK ONLY

TRAFFIC HANDLING PLAN

(DETOUR)

EASTBOUND ROUTE 91
WEIR CANYON Rd
OFF RAMP CLOSURE

NO SCALE

TH-5

STATE OF CALIFORNIA - DEPARTMENT OF TRANSPORTATION
Caltrans
DESIGN BRANCH B
FUNCTIONAL SUPERVISOR: LISA ALVISO
CALCULATED-DESIGNED BY: YENHAI NGUYEN
CHECKED BY: KEITH TA
REVISED BY: Y. NGUYEN
DATE REVISED: 04-14-10

LAST REVISION 04-14-10
DATE PLOTTED => 27-JUL-2010
TIME PLOTTED => 16:57

BORDER LAST REVISED 4/11/2008
RELATIVE BORDER SCALE IS IN INCHES 0 1 2 3
USERNAME => trlim
DGN FILE => f0K680md005.dgn
CU 12221
EA 0K6801

Dist	COUNTY	ROUTE	POST MILES TOTAL PROJECT	SHEET No.	TOTAL SHEETS
12	Ora	91	R9.2/R15.9	40	86

REGISTERED CIVIL ENGINEER 06-15-10 DATE

7-26-10
PLANS APPROVAL DATE

REGISTERED PROFESSIONAL ENGINEER
YENHAI M. NGUYEN
No. C62100
Exp. 9/30/11
CIVIL
STATE OF CALIFORNIA

THE STATE OF CALIFORNIA OR ITS OFFICERS OR AGENTS SHALL NOT BE RESPONSIBLE FOR THE ACCURACY OR COMPLETENESS OF SCANNED COPIES OF THIS PLAN SHEET.

CLOSURE:
EB ROUTE 91 WEIR CANYON Rd ON RAMPS

DETOUR:
SB YORBA LINDA Blvd TO EB LA PALMA Ave TO SB GYPSUM CANYON Rd TO EB RTE 91
NB WEIR CANYON Rd TO EB SANTA ANA CANYON Rd TO NB GYPSUM CANYON Rd TO EB RTE 91

PORTABLE CHANGEABLE MESSAGE SIGN

PCMS No.	MESSAGE	
	1ST FRAME	2ND FRAME
PCMS-15	WEIR CANYON Rd ON RAMP TO EB 91 CLOSED	USE GYPSUM CANYON Rd ON RAMPS
PCMS-16	WEIR CANYON Rd ON RAMP TO EB 91 CLOSED	USE GYPSUM CANYON Rd ON RAMPS
PCMS-17	WEIR CANYON Rd ON RAMP TO EB 91 CLOSED	USE GYPSUM CANYON Rd ON RAMPS
PCMS-18	WEIR CANYON Rd ON RAMP TO EB 91 CLOSED	USE GYPSUM CANYON Rd ON RAMPS

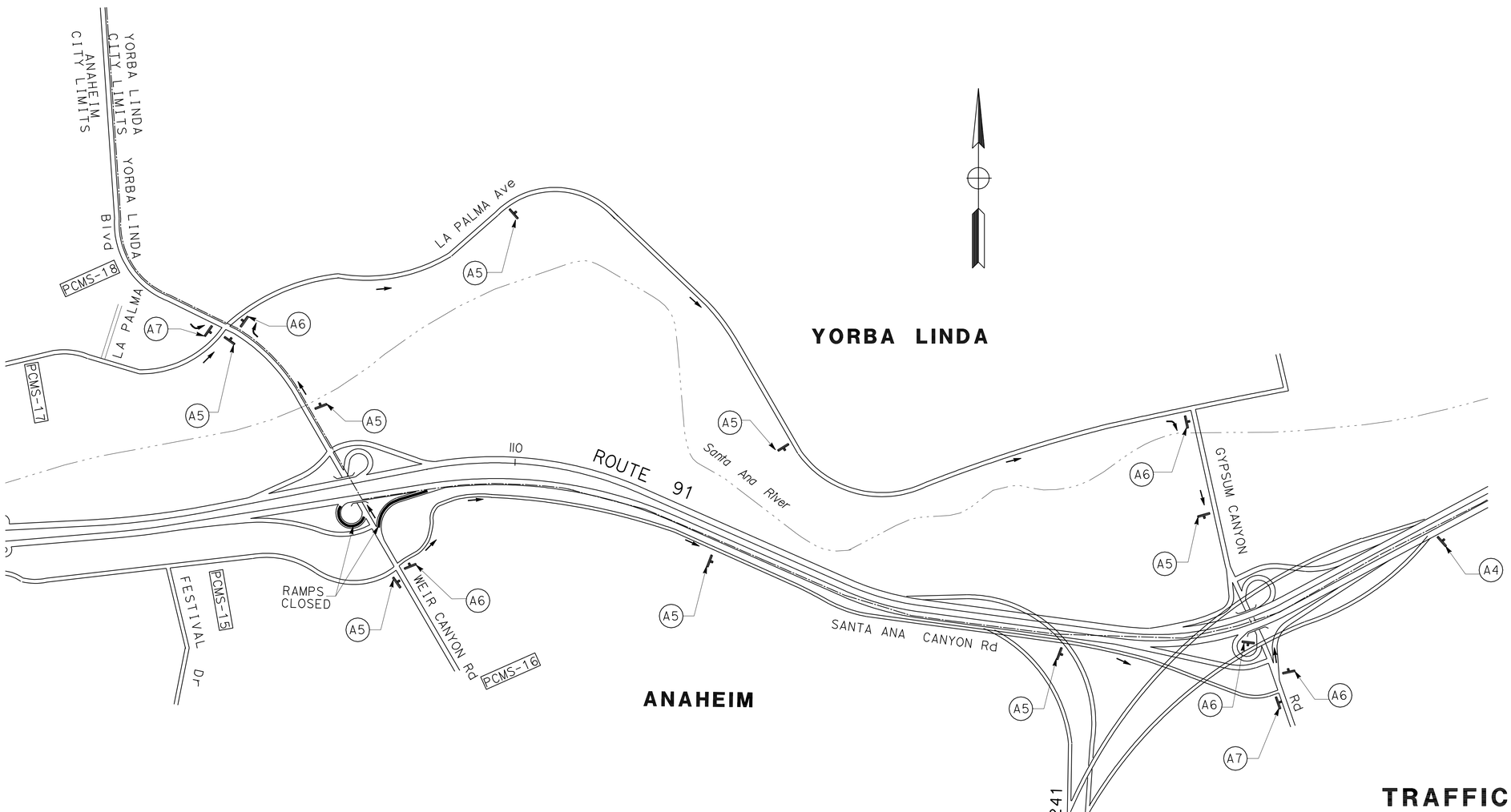

TRAFFIC HANDLING PLAN
(DETOUR)

EASTBOUND ROUTE 91
WEIR CANYON Rd
ON RAMPS CLOSURE

NO SCALE

TH-6

THIS PLAN ACCURATE FOR TRAFFIC HANDLING (DETOUR) WORK ONLY

STATE OF CALIFORNIA - DEPARTMENT OF TRANSPORTATION
Caltrans
DESIGN BRANCH B
FUNCTIONAL SUPERVISOR: LISA ALVISO
CALCULATED-DESIGNED BY: YENHAI NGUYEN
CHECKED BY: KEITH TA
REVISED BY: Y. NGUYEN
DATE REVISED: 04-14-10

LAST REVISION 04-14-10
DATE PLOTTED => 28-JUL-2010
TIME PLOTTED => 08:16

BORDER LAST REVISED 4/11/2008
RELATIVE BORDER SCALE IS IN INCHES 0 1 2 3
USERNAME => trmnguye
DGN FILE => f0K680md006.dgn
CU 12221
EA 0K6801

Dist	COUNTY	ROUTE	POST MILES TOTAL PROJECT	SHEET No.	TOTAL SHEETS
12	Ora	91	R9.2/R15.9	41	86

06-15-10
REGISTERED CIVIL ENGINEER DATE

7-26-10
PLANS APPROVAL DATE

REGISTERED PROFESSIONAL ENGINEER
YENHAI M. NGUYEN
No. C62100
Exp. 9/30/11
CIVIL
STATE OF CALIFORNIA

THE STATE OF CALIFORNIA OR ITS OFFICERS OR AGENTS SHALL NOT BE RESPONSIBLE FOR THE ACCURACY OR COMPLETENESS OF SCANNED COPIES OF THIS PLAN SHEET.

CLOSURE:
EB ROUTE 91 TO SB 241 CONNECTOR

DETOUR:
EB ROUTE 91 TO NB GREEN RIVER Rd TO WB ROUTE 91 TO SB ROUTE 241 CONNECTOR

PORTABLE CHANGEABLE MESSAGE SIGN

PCMS No.	MESSAGE	
	1ST FRAME	2ND FRAME
PCMS-19	EB 91 TO SB 241 CLOSED	USE GREEN RIVER Rd EXIT
PCMS-20	EB 91 TO SB 241 CLOSED	USE GREEN RIVER Rd EXIT

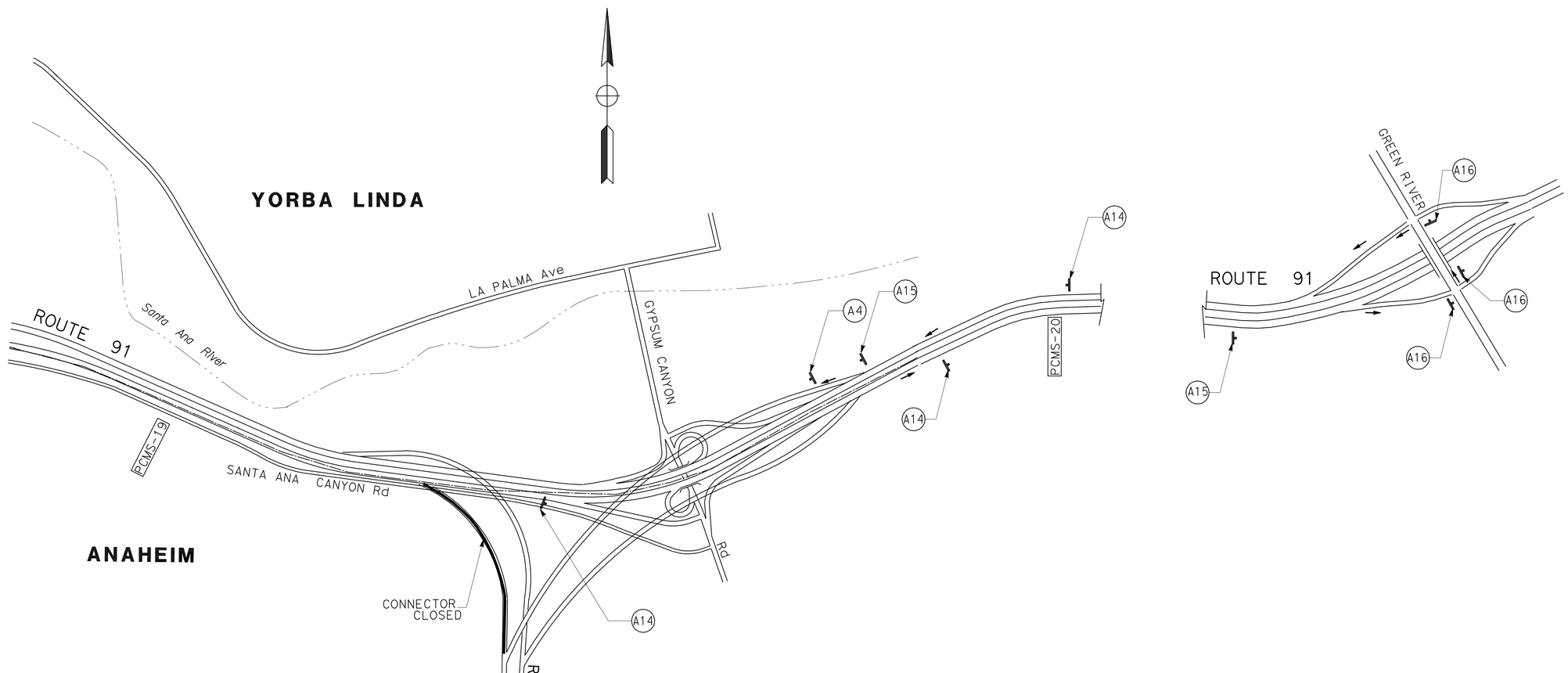

TRAFFIC HANDLING PLAN

EASTBOUND ROUTE 91
SOUTHBOUND ROUTE 241
OFF RAMP CLOSURE

NO SCALE

TH-7

THIS PLAN ACCURATE FOR TRAFFIC HANDLING (DETOUR) WORK ONLY

STATE OF CALIFORNIA - DEPARTMENT OF TRANSPORTATION
Caltrans® DESIGN BRANCH B

FUNCTIONAL SUPERVISOR: LISA ALVISO
CALCULATED-DESIGNED BY: YENHAI NGUYEN
CHECKED BY: KEITH TA
REVISED BY: Y. NGUYEN
DATE REVISED: 04-14-10

LAST REVISION 04-14-10
DATE PLOTTED => 28-JUL-2010
TIME PLOTTED => 08:16

BORDER LAST REVISED 4/11/2008
RELATIVE BORDER SCALE IS IN INCHES 0 1 2 3
USERNAME => trmnguye
DGN FILE => f0K680md007.dgn
CU 12221
EA 0K6801

Dist	COUNTY	ROUTE	POST MILES TOTAL PROJECT	SHEET No.	TOTAL SHEETS
12	Ora	91	R9.2/R15.9	42	86

06-15-10
REGISTERED CIVIL ENGINEER DATE

7-26-10
PLANS APPROVAL DATE

REGISTERED PROFESSIONAL ENGINEER
YENHAI M. NGUYEN
No. C62100
Exp. 9/30/11
CIVIL
STATE OF CALIFORNIA

THE STATE OF CALIFORNIA OR ITS OFFICERS OR AGENTS SHALL NOT BE RESPONSIBLE FOR THE ACCURACY OR COMPLETENESS OF SCANNED COPIES OF THIS PLAN SHEET.

NOTE:

1. USE 6" CAP LETTERS FOR ALL STREET NAMES.

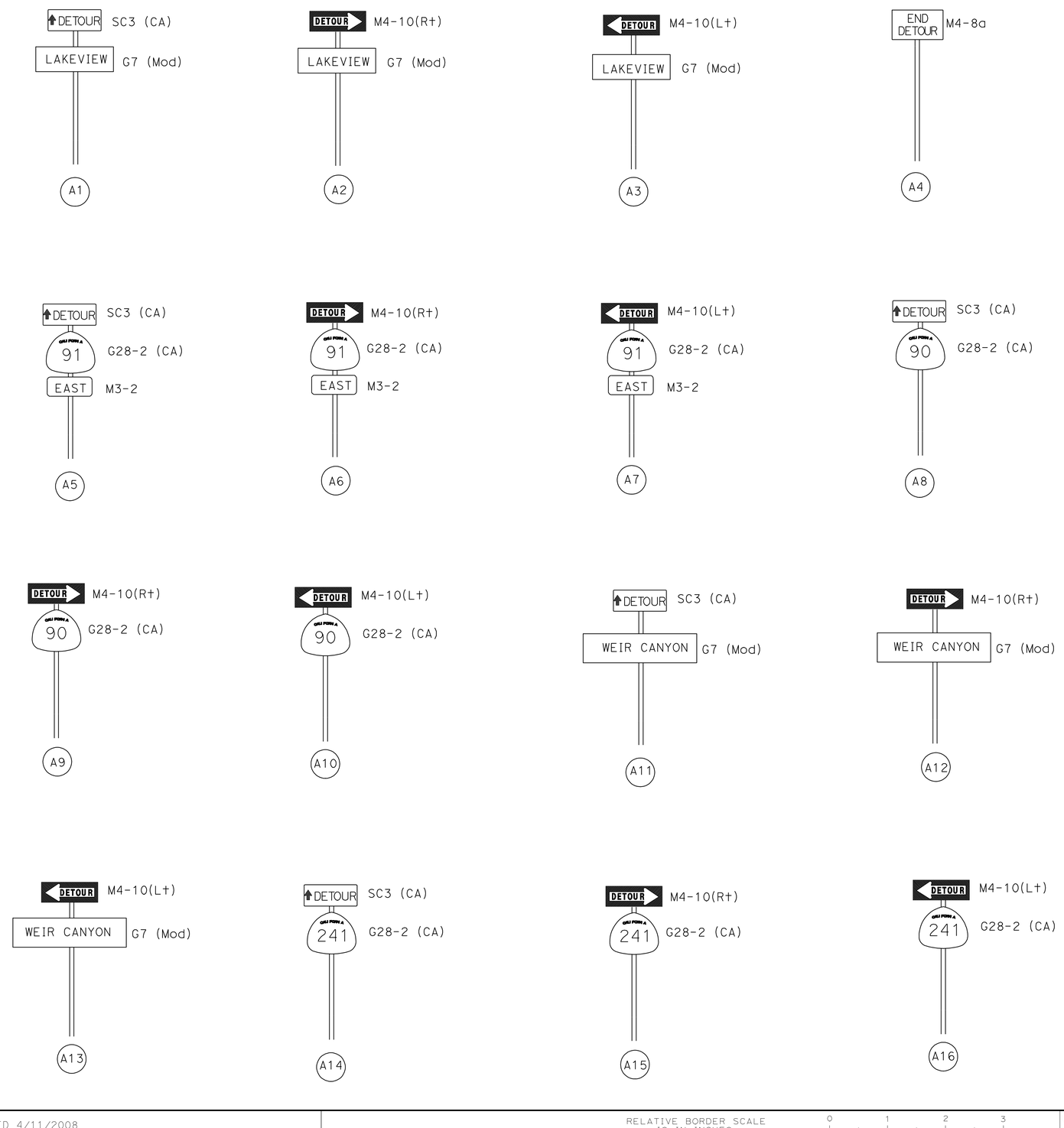

TRAFFIC HANDLING DETAILS

NO SCALE

THD-1

STATE OF CALIFORNIA - DEPARTMENT OF TRANSPORTATION
Caltrans®
DESIGN BRANCH B

FUNCTIONAL SUPERVISOR: LISA ALVISO

CALCULATED-DESIGNED BY: YENHAI NGUYEN
CHECKED BY: KEITH TA

REVISED BY: Y. NGUYEN
DATE REVISED: 04-14-10

LAST REVISION: 04-14-10
DATE PLOTTED => 27-JUL-2010
TIME PLOTTED => 16:57

BORDER LAST REVISED 4/11/2008

RELATIVE BORDER SCALE IS IN INCHES 0 1 2 3

USERNAME => trliim
DGN FILE => f0K680me001.dgn

CU 12221

EA 0K6801

Dist	COUNTY	ROUTE	POST MILES TOTAL PROJECT	SHEET No.	TOTAL SHEETS
12	Ora	91	R9.2/R15.9	43	86

06-15-10
REGISTERED CIVIL ENGINEER DATE

7-26-10
PLANS APPROVAL DATE

REGISTERED PROFESSIONAL ENGINEER
YENHAI M. NGUYEN
No. C62100
Exp. 9/30/11
CIVIL
STATE OF CALIFORNIA

THE STATE OF CALIFORNIA OR ITS OFFICERS OR AGENTS SHALL NOT BE RESPONSIBLE FOR THE ACCURACY OR COMPLETENESS OF SCANNED COPIES OF THIS PLAN SHEET.

NOTE:

1. FOR ADDITIONAL QUANTITIES OF CONSTRUCTION AREA SIGNS, SEE SHEET CS-1.

CONSTRUCTION AREA SIGN (DETOUR)

SHEET No.	SIGN	CODE	PANEL SIZE (in)	No. OF POST AND SIZE (in)	No. OF SIGNS (EA)
TH-1	A1	SC3(CA)	48 x 18	1 - 6 x 6	5
		G7 (Mod)	54 x 12		
	A2	M4-10(R†)	48 x 18	1 - 6 x 6	1
		G7 (Mod)	54 x 12		
	A3	M4-10(L†)	48 x 18	1 - 6 x 6	2
		G7 (Mod)	54 x 12		
	A4	M4-8a	24 x 18	1 - 6 x 6	1
TH-2	A5	SC3(CA)	48 x 18	1 - 6 x 6	6
		G28-2 (CA)	48 x 48		
		M3-2	30 x 15		
	A6	M4-10(R†)	48 x 18	1 - 6 x 6	4
		G28-2 (CA)	48 x 48		
		M3-2	30 x 15		
	A7	M4-10(L†)	48 x 18	1 - 6 x 6	6
		G28-2 (CA)	48 x 48		
		M3-2	30 x 15		
	A4	M4-8a	24 x 18	1 - 6 x 6	1
TH-3	A8	SC3(CA)	48 x 18	1 - 6 x 6	8
		G28-2 (CA)	48 x 48		
	A9	M4-10(R†)	48 x 18	1 - 6 x 6	2
		G28-2 (CA)	48 x 48		
	A10	M4-10(L†)	48 x 18	1 - 6 x 6	4
		G28-2 (CA)	48 x 48		
	A4	M4-8a	24 x 18	1 - 6 x 6	2
TH-4	A5	SC3(CA)	48 x 18	1 - 6 x 6	14
		G28-2 (CA)	48 x 48		
		M3-2	30 x 15		
	A6	M4-10(R†)	48 x 18	1 - 6 x 6	4
		G28-2 (CA)	48 x 48		
		M3-2	30 x 15		
	A7	M4-10(L†)	48 x 18	1 - 6 x 6	4
		G28-2 (CA)	48 x 48		
		M3-2	30 x 15		
	A4	M4-8a	24 x 18	1 - 6 x 6	1

CONSTRUCTION AREA SIGN (DETOUR)

SHEET No.	SIGN	CODE	PANEL SIZE (in)	No. OF POST AND SIZE (in)	No. OF SIGNS (EA)
TH-5	A11	SC3(CA)	48 x 18	1 - 6 x 6	6
		G7 (Mod)	54 x 12		
	A12	M4-10(R†)	48 x 18	1 - 6 x 6	1
		G7 (Mod)	54 x 12		
	A13	M4-10(L†)	48 x 18	1 - 6 x 6	2
		G7 (Mod)	54 x 12		
	A4	M4-8a	24 x 18	1 - 6 x 6	1
TH-6	A5	SC3(CA)	48 x 18	1 - 6 x 6	8
		G28-2 (CA)	48 x 48		
		M3-2	30 x 15		
	A6	M4-10(R†)	48 x 18	1 - 6 x 6	5
		G28-2 (CA)	48 x 48		
		M3-2	30 x 15		
	A7	M4-10(L†)	48 x 18	1 - 6 x 6	2
		G28-2 (CA)	48 x 48		
		M3-2	30 x 15		
	A4	M4-8a	24 x 18	1 - 6 x 6	1
TH-7	A14	SC3(CA)	48 x 18	1 - 6 x 6	3
		G28-2 (CA)	48 x 48		
		M3-2	30 x 15		
	A15	M4-10(R†)	48 x 18	1 - 6 x 6	2
		G28-2 (CA)	48 x 48		
		M3-2	30 x 15		
	A16	M4-10(L†)	48 x 18	1 - 6 x 6	3
		G28-2 (CA)	48 x 48		
		M3-2	30 x 15		
	A4	M4-8a	24 x 18	1 - 6 x 6	1

TRAFFIC HANDLING QUANTITIES

THQ-1

STATE OF CALIFORNIA - DEPARTMENT OF TRANSPORTATION
Caltrans
DESIGN BRANCH B

FUNCTIONAL SUPERVISOR: LISA ALVISO
CALCULATED-DESIGNED BY: YENHAI NGUYEN
CHECKED BY: KEITH TA
REVISED BY: Y. NGUYEN
DATE REVISED: 04-14-10

LAST REVISION 04-14-10
DATE PLOTTED => 27-JUL-2010
TIME PLOTTED => 16:57

Dist	COUNTY	ROUTE	POST MILES TOTAL PROJECT	SHEET No.	TOTAL SHEETS
12	Ora	91	R9.2/R15.9	44	86

REGISTERED CIVIL ENGINEER 06-15-10 DATE

7-26-10
PLANS APPROVAL DATE

REGISTERED PROFESSIONAL ENGINEER
YENHAI M. NGUYEN
No. C62100
Exp. 9/30/11
CIVIL
STATE OF CALIFORNIA

THE STATE OF CALIFORNIA OR ITS OFFICERS OR AGENTS SHALL NOT BE RESPONSIBLE FOR THE ACCURACY OR COMPLETENESS OF SCANNED COPIES OF THIS PLAN SHEET.

NOTES:

1. NON-REFLECTIVE PAVEMENT MARKERS FOR DETAILS 13 Mod AND DETAIL 14 Mod SHALL BE INSTALLED PRIOR TO APPLYING THERMOPLASTIC TRAFFIC STRIPES.
2. EXISTING PAVEMENT DELINEATION SHALL BE REMOVED AND REPLACED AT THE SAME LOCATION.
3. EXISTING OCTA EXPRESS LANE YELLOW THERMOPLASTIC BUFFER AND PAVEMENT MARKERS SHALL REMAIN IN PLACE.

LEGENDS:

- TRAFFIC DIRECTION
- CHANGE IN PAVEMENT DELINEATION DETAILS
- TYPE G ONE-WAY CLEAR RETROREFLECTIVE MARKER
- TYPE C RED-CLEAR RETROREFLECTIVE MARKER
- TYPE A WHITE NON-REFLECTIVE

ABBREVIATION:

OCTA: Orange County Transportation Authority

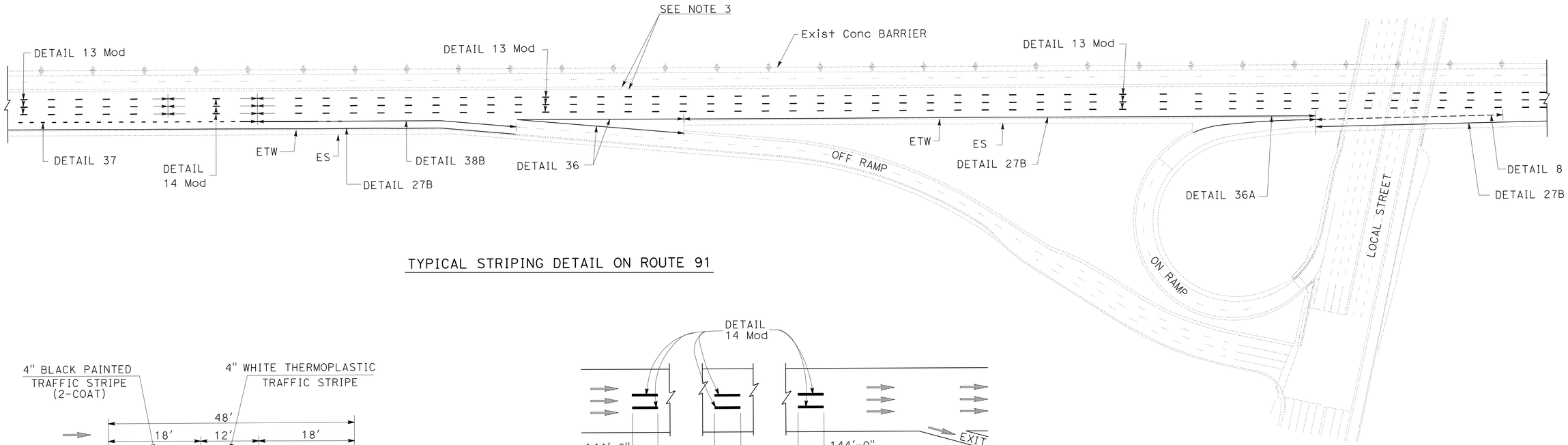

TYPICAL STRIPING DETAIL ON ROUTE 91

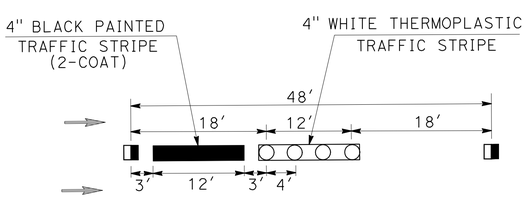

DETAIL 13 Mod

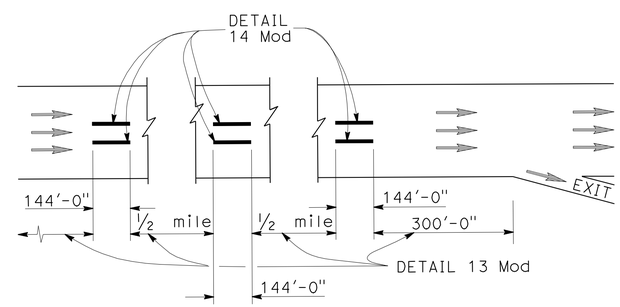

TYPICAL LANE LINE DELINEATION IN ADVANCE OF EXIT RAMP

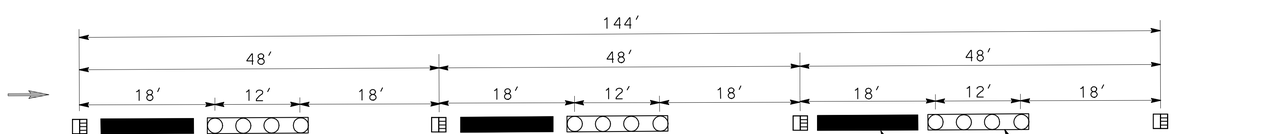

DETAIL 14 Mod

PAVEMENT DELINEATION DETAILS

NO SCALE

PDD-1

STATE OF CALIFORNIA - DEPARTMENT OF TRANSPORTATION
Caltrans
DESIGN BRANCH B

FUNCTIONAL SUPERVISOR: LISA ALVISO
CALCULATED-DESIGNED BY: YENHAI NGUYEN
CHECKED BY: KEITH TA
REVISED BY: Y. NGUYEN
DATE REVISED: 04-14-10

LAST REVISION 04-14-10
DATE PLOTTED => 27-JUL-2010
TIME PLOTTED => 16:57

Dist	COUNTY	ROUTE	POST MILES TOTAL PROJECT	SHEET No.	TOTAL SHEETS
12	Ora	91	R9.2/R15.9	45	86

06-15-10
REGISTERED CIVIL ENGINEER DATE

7-26-10
PLANS APPROVAL DATE

REGISTERED PROFESSIONAL ENGINEER
YENHAI M. NGUYEN
No. C62100
Exp. 9/30/11
CIVIL
STATE OF CALIFORNIA

THE STATE OF CALIFORNIA OR ITS OFFICERS OR AGENTS SHALL NOT BE RESPONSIBLE FOR THE ACCURACY OR COMPLETENESS OF SCANNED COPIES OF THIS PLAN SHEET.

PAVEMENT DELINEATION QUANTITIES

SHEET No.	STATION TO STATION	PAINT TRAFFIC STRIPE (2- COAT)	THERMOPLASTIC TRAFFIC STRIPE						PAVEMENT MARKER			REMOVE THERMOPLASTIC TRAFFIC STRIPE						REMOVE PAVEMENT MARKER
		4"	4"			8"			NON REFLEC-TIVE	RETRO REFLECTIVE		4"			8"			
		BLACK (BROKEN 36-12) DETAILS 13 Mod, 14 Mod	WHITE (BROKEN 17-7) DETAIL 8	WHITE BROKEN (36-12) DETAILS 13 Mod, 14 Mod	SOLID WHITE DETAIL 27B	SOLID WHITE DETAIL 36, 36A	SOLID WHITE DETAIL 38B	WHITE BROKEN (12-3) DETAIL 37	TYPE A DETAILS 13Mod, 14 Mod	TYPE C DETAIL 14 Mod	TYPE G DETAIL 36, 36A, 38B	WHITE (BROKEN 17-7) DETAIL 8	WHITE BROKEN (36-12) DETAILS 13 Mod, 14 Mod	SOLID WHITE DETAIL 27B	SOLID WHITE DETAIL 36, 36A	SOLID WHITE DETAIL 38B	WHITE BROKEN (12-3) DETAIL 37	
		LF	LF	LF	LF	LF	LF	LF	EA	EA	EA	LF	LF	LF	LF	LF	LF	EA
L-1	"C" 71+50 TO "A" 82+50	4400		4400	1100			1100	368	76	96		1100	1100			440	540
L-2	"A" 82+50 TO "A" 94+50	4800		4800	1200			1200	400	82	104		1200	1200			480	586
L-3	"A" 94+50 TO "A" 107+50	5200		5200	1300	553		350	432	26	138		1300	1300	1106		140	596
L-4	"A" 107+50 TO "A" 117+50	4000	288	4000	1000				336		88	87	1000	1000				424
L-5	"A" 117+50 TO "A" 128+50	4400	305	4400	1100				368		96	92	1100	1100				464
L-6	"A" 128+50 TO "A" 140+50	4800		4800	1200				400		104		1200	1200				504
L-7	"A" 140+50 TO "A" 153+50	4650		4650	1300			550	388	40	101		1163	1300			220	529
L-8	"A" 153+50 TO "A" 165+50	3600		3600	1200			1200	300	82	78		900	1200			480	460
L-9	"A" 165+50 TO "A" 176+50	3300		3300	1100		265	835	276	58	96		825	1100		530	334	430
L-10	"A" 176+50 TO "A" 187+00	3150		3150	1050	772	29		264		103	71	788	1050	1544	58		367
L-11	"A" 187+00 TO "A" 197+50	3150	235	3150	1400	355			264		85		788	1400	710			349
L-12	"A" 197+50 TO "A" 209+00	3450		3450	1150				288		75		863	1150				363
L-13	"A" 209+00 TO "A" 222+50	4050		4050	1350				336		87		1013	1350				423
L-14	"A" 222+50 TO "A" 235+50	3900		3900	1300				324		84		975	1300				408
L-15	"A" 235+50 TO "A" 248+50	3900		3900	1300				324		84		975	1300				408
L-16	"A" 248+50 TO "A" 261+50	3900		3900	1300				324		84		975	1300				408
L-17	"A" 261+50 TO "A" 273+50	3600		3600	1200				300		78		900	1200				378
L-18	"A" 273+50 TO "A" 285+50	3600		3600	1200				300		78		900	1200				378
L-19	"A" 285+50 TO "D" 297+50	3600		3600	1200	321			300	12	83		900	1200	642			395
L-20	"D" 297+50 TO "D" 310+00	3750		3750	1250				312		81		938	1250				393
L-21	"D" 310+00 TO "D" 322+50	3750	293	3750	1250				312		81	88	938	1250				393
L-22	"D" 322+50 TO "D" 336+50	4200		4200	1400				348		90		1050	1400				438
L-23	"D" 336+50 TO "D" 348+50	3600	270	3600	1652	182			300		87	81	900	1652	364			387
L-24	"D" 348+50 TO "D" 362+50	4200	332	4200	644			756	312	54	81	100	1050	644			304	447
L-25	"D" 362+50 TO "D" 375+50	3900		3900	0			1300	324	90	84		975	0			520	498
L-26	"D" 375+50 TO "D" 388+50	3900		3900	0		676	686	324	48	142		975	0		1352	276	514
L-27	"D" 388+50 TO "D" 400+50	3600		3600	670	940			300		120		900	670	1880			420
L-28	"D" 400+50 TO "D" 414+00	4050		4050	1350				336		87		1013	1350				423
L-29	"D" 414+00 TO "D" 418+00	1200		1200	400				108		30		300	400				138
SUB-TOTAL		111600	1723	111600	31566	3123	970	7977	9268	568	2625	519	27904	31566	6246	1940	3194	12461
TOTAL		111600	1723	111600	31566	4093		7977	9268	3193		71369						12461

PAVEMENT DELINEATION QUANTITIES

PDQ-1

STATE OF CALIFORNIA - DEPARTMENT OF TRANSPORTATION
Caltrans® DESIGN BRANCH B

FUNCTIONAL SUPERVISOR: LISA ALVISO
CALCULATED-DESIGNED BY: YENHAI NGUYEN
CHECKED BY: KEITH TA
REVISED BY: Y. NGUYEN
DATE REVISED: 04-14-10

LAST REVISION 04-14-10 | DATE PLOTTED => 27-JUL-2010 | TIME PLOTTED => 16:57

Dist	COUNTY	ROUTE	POST MILES TOTAL PROJECT	SHEET No.	TOTAL SHEETS
12	Ora	91	R9.2/R15.9	46	86

06-15-10
REGISTERED CIVIL ENGINEER DATE

7-26-10
PLANS APPROVAL DATE

REGISTERED PROFESSIONAL ENGINEER
YENHAI M. NGUYEN
No. C62100
Exp. 9/30/11
CIVIL
STATE OF CALIFORNIA

THE STATE OF CALIFORNIA OR ITS OFFICERS OR AGENTS SHALL NOT BE RESPONSIBLE FOR THE ACCURACY OR COMPLETENESS OF SCANNED COPIES OF THIS PLAN SHEET.

NOTES:

1. FOR COMPLETE RIGHT OF WAY AND ACCURATE ACCESS DATA, CONTACT RIGHT OF WAY ENGINEERING AT THE DISTRICT OFFICE.
2. EXACT LOCATIONS OF ALL SIGNS SHALL BE DETERMINED BY THE ENGINEER.

ABBREVIATIONS:

IS INSTALL ROADSIDE SIGN

ISS INSTALL SIGN (STRAP AND SADDLE BRACKET METHOD)

ISP INSTALL ROADSIDE SIGN PANEL ON EXISTING POST

RM REMOVE ROADSIDE SIGN (WOOD POST)

RMS REMOVE ROADSIDE SIGN (STRAP AND SADDLE METHOD)

LEGEND:

X SIGN IDENTIFICATION NUMBER

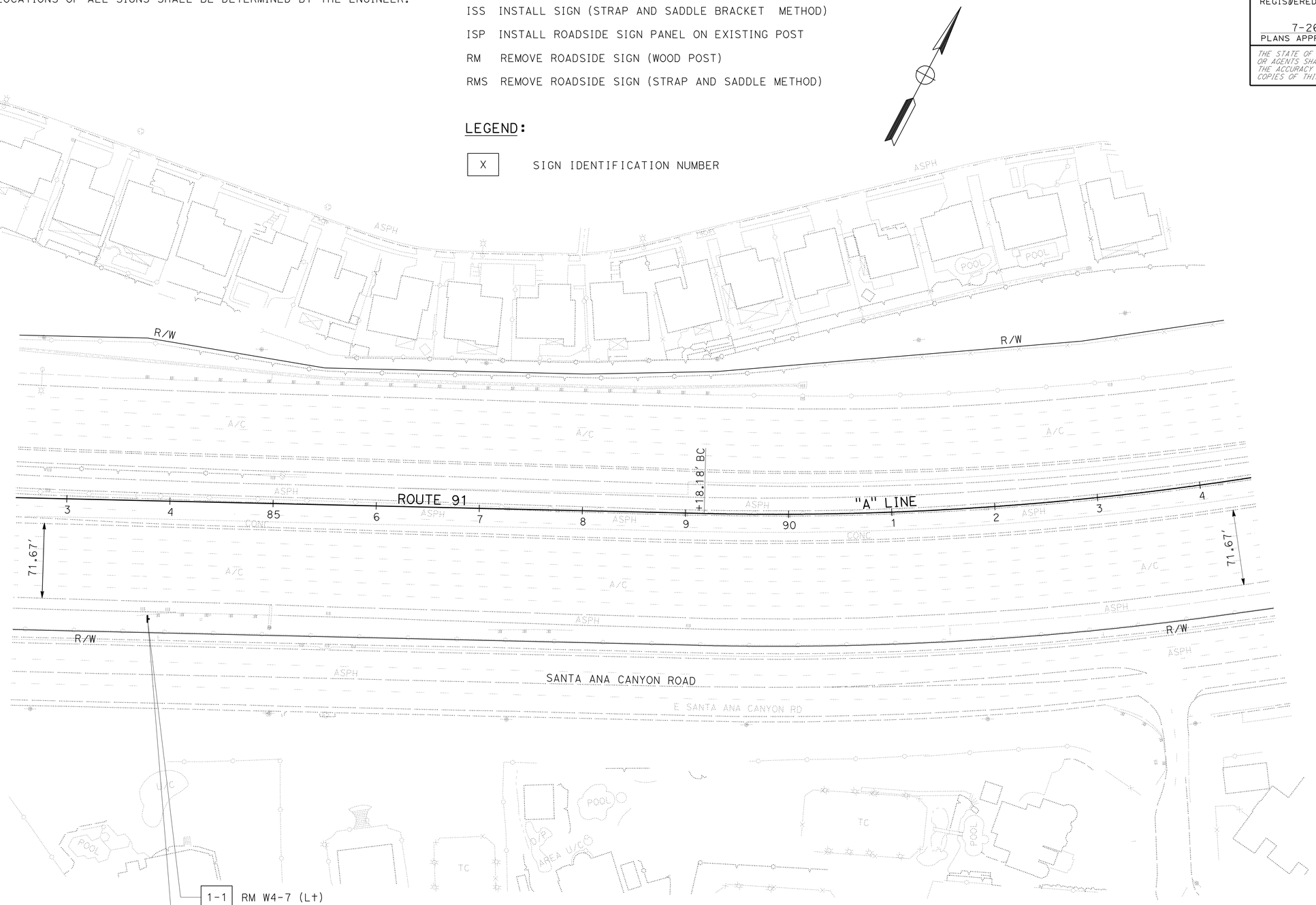

THIS PLAN ACCURATE FOR SIGN WORK ONLY

SIGN PLAN

SCALE: 1" = 50'

S-1

STATE OF CALIFORNIA - DEPARTMENT OF TRANSPORTATION
Caltrans® DESIGN BRANCH B

FUNCTIONAL SUPERVISOR: LISA ALVISO

CALCULATED-DESIGNED BY: YENHAI NGUYEN
CHECKED BY: KEITH TA

REVISED BY: Y. NGUYEN
DATE REVISED: 04-14-10

LAST REVISION DATE PLOTTED => 27-JUL-2010
TIME PLOTTED => 16:57
04-14-10

BORDER LAST REVISED 4/11/2008

RELATIVE BORDER SCALE IS IN INCHES 0 1 2 3

USERNAME => trlim
DGN FILE => f0K680oa001.dgn

CU 12221

EA 0K6801

Dist	COUNTY	ROUTE	POST MILES TOTAL PROJECT	SHEET No.	TOTAL SHEETS
12	Ora	91	R9.2/R15.9	47	86

06-15-10
REGISTERED CIVIL ENGINEER DATE

7-26-10
PLANS APPROVAL DATE

REGISTERED PROFESSIONAL ENGINEER
YENHAI M. NGUYEN
No. C62100
Exp. 9/30/11
CIVIL
STATE OF CALIFORNIA

THE STATE OF CALIFORNIA OR ITS OFFICERS OR AGENTS SHALL NOT BE RESPONSIBLE FOR THE ACCURACY OR COMPLETENESS OF SCANNED COPIES OF THIS PLAN SHEET.

NOTE:

1. FOR COMPLETE RIGHT OF WAY AND ACCURATE ACCESS DATA, CONTACT RIGHT OF WAY ENGINEERING AT THE DISTRICT OFFICE.

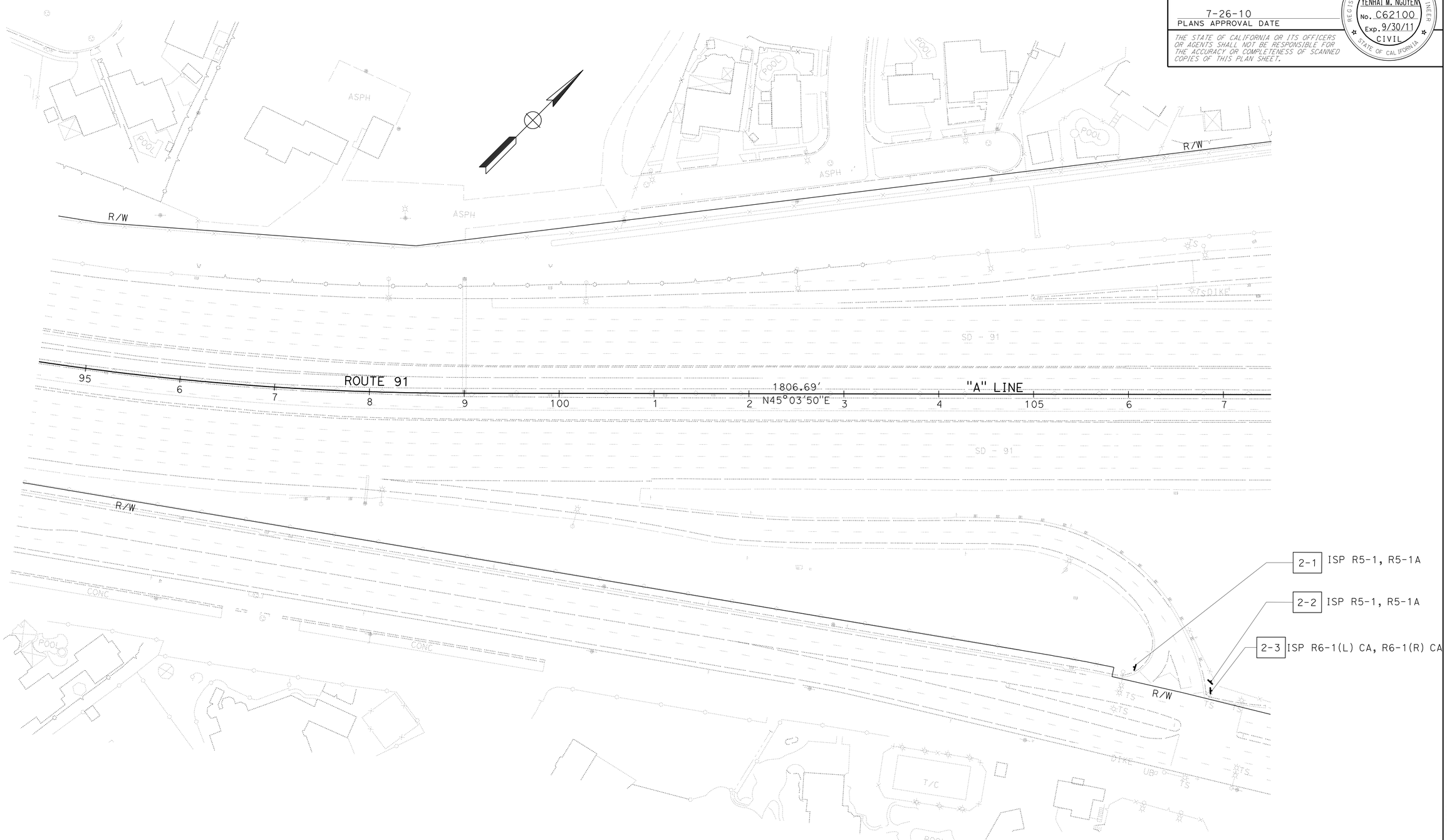

THIS PLAN ACCURATE FOR SIGN WORK ONLY

SIGN PLAN

SCALE: 1" = 50'

S-2

STATE OF CALIFORNIA - DEPARTMENT OF TRANSPORTATION
Caltrans®
DESIGN BRANCH B

FUNCTIONAL SUPERVISOR: LISA ALVISO

CALCULATED-DESIGNED BY: YENHAI NGUYEN
CHECKED BY: KEITH TA

REVISED BY: Y. NGUYEN
DATE REVISED: 04-14-10

LAST REVISION: 04-14-10
DATE PLOTTED => 27-JUL-2010
TIME PLOTTED => 16:58

Dist	COUNTY	ROUTE	POST MILES TOTAL PROJECT	SHEET No.	TOTAL SHEETS
12	Ora	91	R9.2/R15.9	48	86

06-15-10
REGISTERED CIVIL ENGINEER DATE

7-26-10
PLANS APPROVAL DATE

REGISTERED PROFESSIONAL ENGINEER
YENHAI M. NGUYEN
No. C62100
Exp. 9/30/11
CIVIL
STATE OF CALIFORNIA

THE STATE OF CALIFORNIA OR ITS OFFICERS OR AGENTS SHALL NOT BE RESPONSIBLE FOR THE ACCURACY OR COMPLETENESS OF SCANNED COPIES OF THIS PLAN SHEET.

NOTE:

1. FOR COMPLETE RIGHT OF WAY AND ACCURATE ACCESS DATA, CONTACT RIGHT OF WAY ENGINEERING AT THE DISTRICT OFFICE.

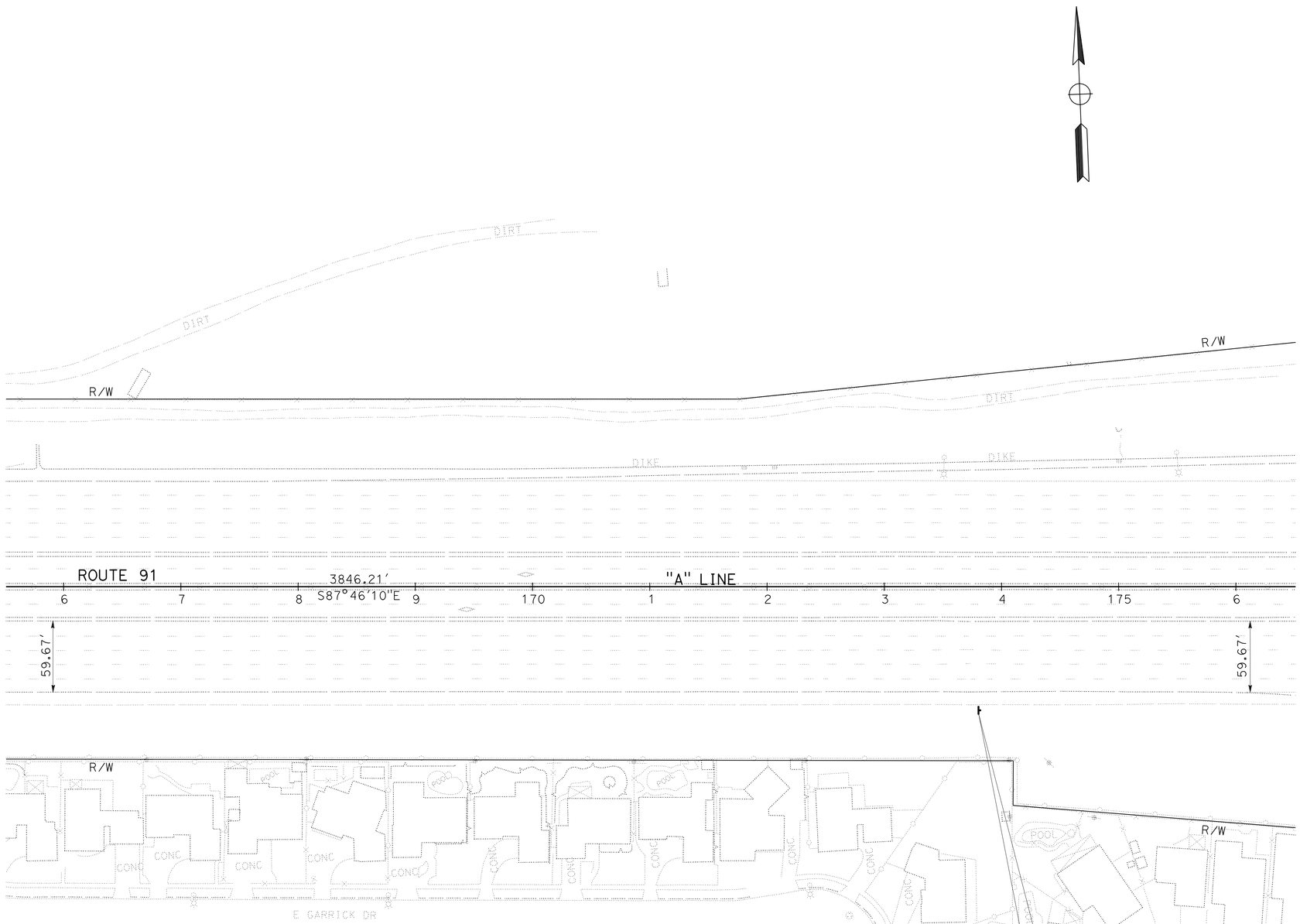

THIS PLAN ACCURATE FOR SIGN WORK ONLY

SIGN PLAN

SCALE: 1" = 50'

S-3

STATE OF CALIFORNIA - DEPARTMENT OF TRANSPORTATION
Caltrans
DESIGN BRANCH B

FUNCTIONAL SUPERVISOR: LISA ALVISO
CALCULATED-DESIGNED BY: YENHAI NGUYEN
CHECKED BY: KEITH TA
REVISED BY: Y. NGUYEN
DATE REVISED: 04-14-10

LAST REVISION 04-14-10
DATE PLOTTED => 27-JUL-2010
TIME PLOTTED => 16:58

Dist	COUNTY	ROUTE	POST MILES TOTAL PROJECT	SHEET No.	TOTAL SHEETS
12	Ora	91	R9.2/R15.9	49	86

06-15-10
REGISTERED CIVIL ENGINEER DATE

7-26-10
PLANS APPROVAL DATE

REGISTERED PROFESSIONAL ENGINEER
YENHAI M. NGUYEN
No. C62100
Exp. 9/30/11
CIVIL
STATE OF CALIFORNIA

THE STATE OF CALIFORNIA OR ITS OFFICERS OR AGENTS SHALL NOT BE RESPONSIBLE FOR THE ACCURACY OR COMPLETENESS OF SCANNED COPIES OF THIS PLAN SHEET.

NOTE:

1. FOR COMPLETE RIGHT OF WAY AND ACCURATE ACCESS DATA, CONTACT RIGHT OF WAY ENGINEERING AT THE DISTRICT OFFICE.

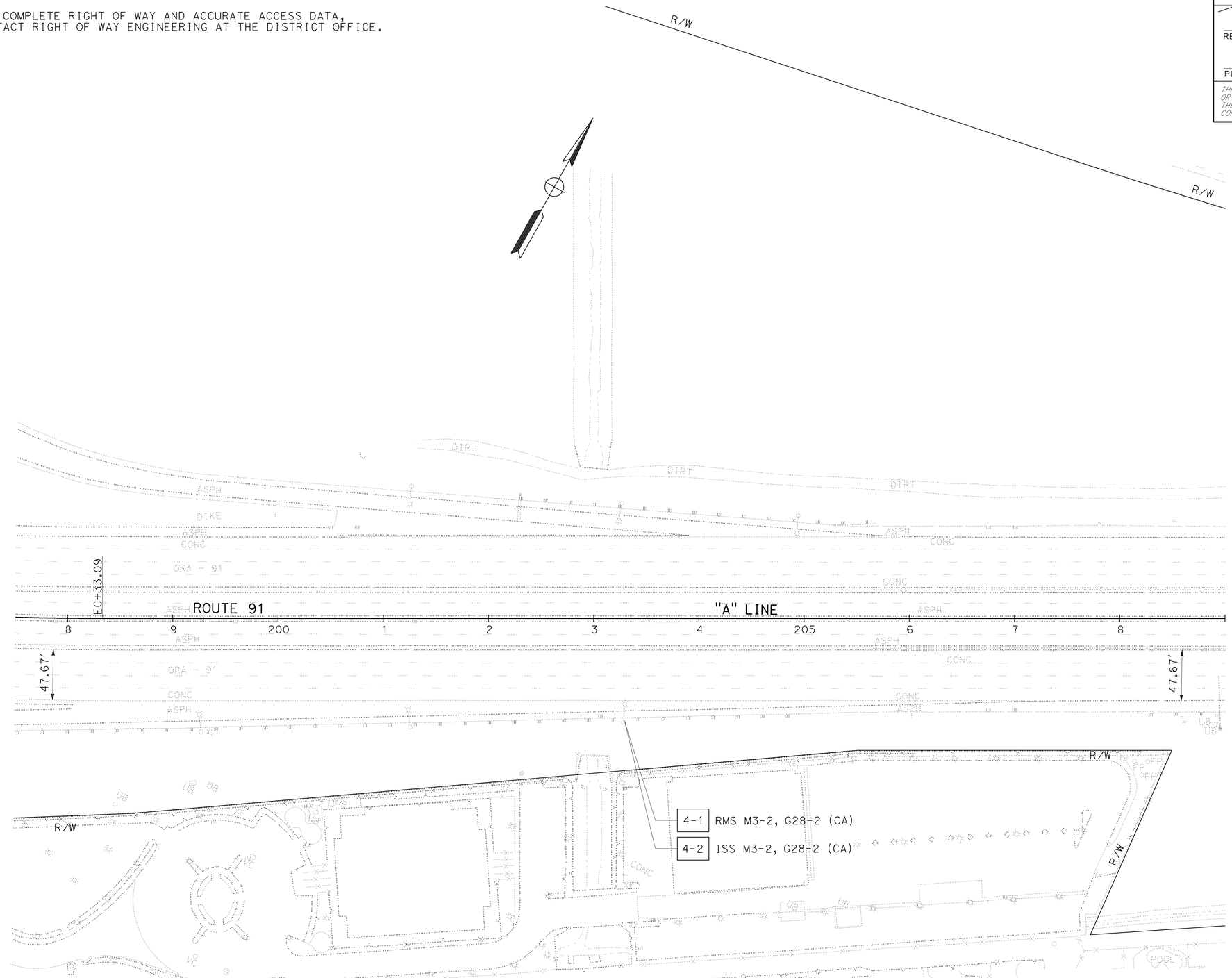

THIS PLAN ACCURATE FOR SIGN WORK ONLY

SIGN PLAN

SCALE: 1" = 50'

S-4

REVISED BY	Y. NGUYEN
DATE REVISED	04-14-10
CALCULATED-DESIGNED BY	YENHAI NGUYEN
CHECKED BY	KEITH TA
FUNCTIONAL SUPERVISOR	LISA ALVISO

STATE OF CALIFORNIA - DEPARTMENT OF TRANSPORTATION
Caltrans
DESIGN BRANCH B

LAST REVISION 04-14-10
DATE PLOTTED => 27-JUL-2010
TIME PLOTTED => 16:58

Dist	COUNTY	ROUTE	POST MILES TOTAL PROJECT	SHEET No.	TOTAL SHEETS
12	Ora	91	R9.2/R15.9	50	86

06-15-10
REGISTERED CIVIL ENGINEER DATE

7-26-10
PLANS APPROVAL DATE

REGISTERED PROFESSIONAL ENGINEER
YENHAI M. NGUYEN
No. C62100
Exp. 9/30/11
CIVIL
STATE OF CALIFORNIA

THE STATE OF CALIFORNIA OR ITS OFFICERS OR AGENTS SHALL NOT BE RESPONSIBLE FOR THE ACCURACY OR COMPLETENESS OF SCANNED COPIES OF THIS PLAN SHEET.

NOTE:

1. FOR COMPLETE RIGHT OF WAY AND ACCURATE ACCESS DATA, CONTACT RIGHT OF WAY ENGINEERING AT THE DISTRICT OFFICE.

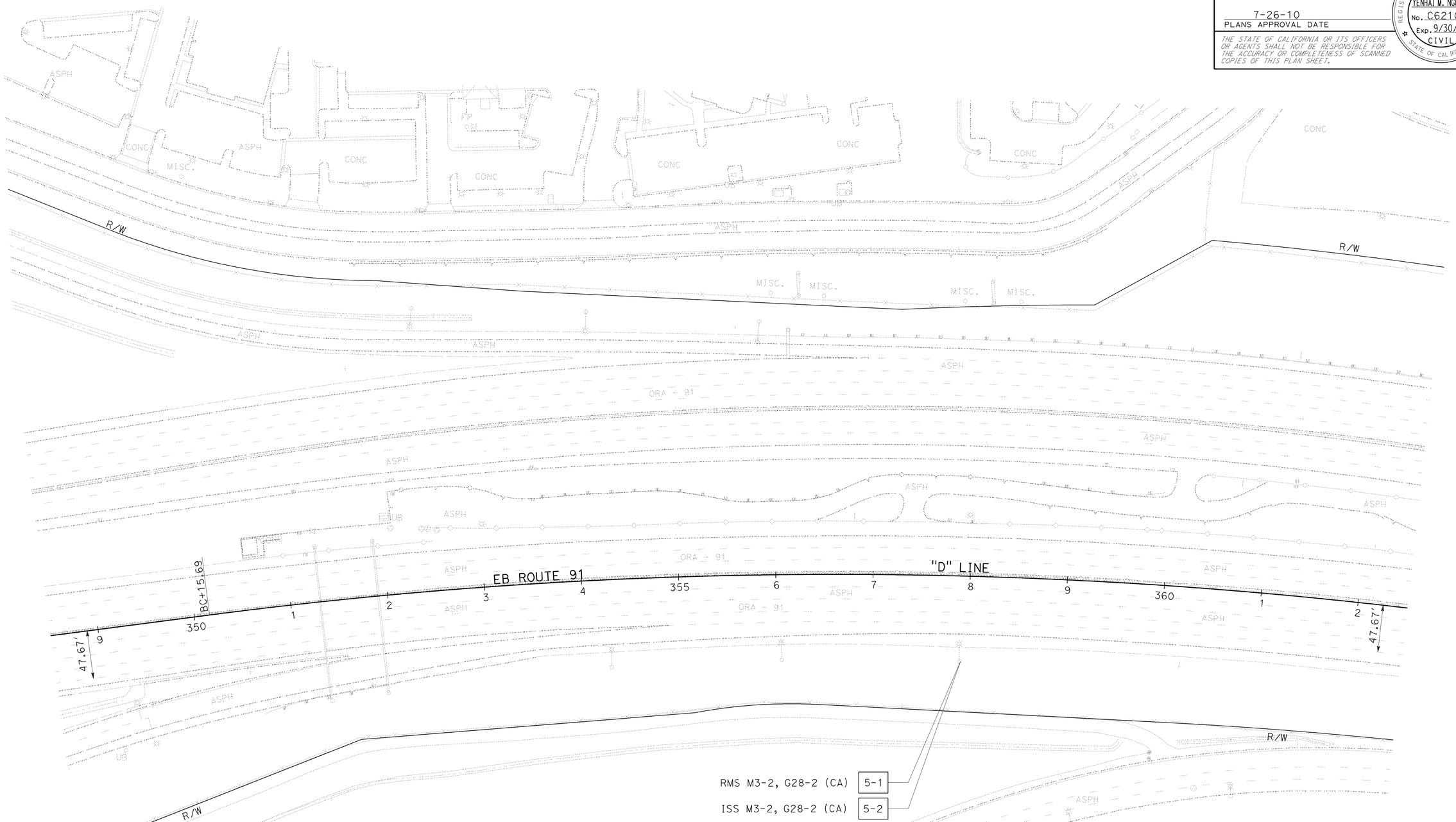

SIGN PLAN

SCALE: 1" = 50'

S-5

THIS PLAN ACCURATE FOR SIGN WORK ONLY

STATE OF CALIFORNIA - DEPARTMENT OF TRANSPORTATION
Caltrans
DESIGN BRANCH B

FUNCTIONAL SUPERVISOR: LISA ALVISO

CALCULATED-DESIGNED BY: YENHAI NGUYEN
CHECKED BY: KEITH TA

REVISED BY: Y. NGUYEN
DATE REVISED: 04-14-10

LAST REVISION 04-14-10 | DATE PLOTTED => 27-JUL-2010 | TIME PLOTTED => 16:58

Dist	COUNTY	ROUTE	POST MILES TOTAL PROJECT	SHEET No.	TOTAL SHEETS
12	Ora	91	R9.2/R15.9	51	86

06-15-10
REGISTERED CIVIL ENGINEER DATE

7-26-10
PLANS APPROVAL DATE

REGISTERED PROFESSIONAL ENGINEER
YENHAI M. NGUYEN
No. C62100
Exp. 9/30/11
CIVIL
STATE OF CALIFORNIA

THE STATE OF CALIFORNIA OR ITS OFFICERS OR AGENTS SHALL NOT BE RESPONSIBLE FOR THE ACCURACY OR COMPLETENESS OF SCANNED COPIES OF THIS PLAN SHEET.

ROADSIDE SIGN QUANTITIES

SHEET No.	SIGN No.	SIGN CODE	PANEL SIZE	POST SIZE & LENGTH 4"x4"	4"x6"	6"x6"	ROADSIDE SIGN ONE POST	INSTALL SIGN (STRAP & SADDLE BRACKET METHOD)	INSTALL ROADSIDE SIGN PANEL ON EXISTING POST	REMOVE ROADSIDE SIGN	REMOVE ROADSIDE SIGN (STRAP & SADDLE BRACKET METHOD)
				LF	LF	LF	EA	EA	EA	EA	EA
S-1	1-1	W4-7 (L+)								1	
	1-2	W4-7 (L+)	48" x 48"			14	1				
S-2	2-1	R5-1	36" x 36"						1		
		R5-1A	36" x 24"						1		
	2-2	R5-1	36" x 36"						1		
		R5-1A	36" x 24"						1		
	2-3	R6-1(L) CA	36" x 12"						1		
		R6-1(R) CA	36" x 12"						1		
S-3	3-1	W4-7 (L+)								1	
	3-2	W4-7 (L+)	48" x 48"			14	1				
S-4	4-1	M3-2									1
		G28-2 (CA)									1
	4-2	M3-2	26" x 12"					1			
		G28-2 (CA)	25" x 24"					1			
S-5	5-1	M3-2									1
		G28-2 (CA)									1
	5-2	M3-2	26" x 12"					1			
		G28-2 (CA)	25" x 24"					1			
TOTAL							2	4	6	2	4

SIGN QUANTITIES
SQ-1

STATE OF CALIFORNIA - DEPARTMENT OF TRANSPORTATION
Caltrans® DESIGN BRANCH B

FUNCTIONAL SUPERVISOR: LISA ALVISO
CALCULATED-DESIGNED BY: YENHAI NGUYEN
CHECKED BY: KEITH TA
REVISED BY: Y. NGUYEN
DATE REVISED: 04-14-10

LAST REVISION 04-14-10 | DATE PLOTTED => 27-JUL-2010 | TIME PLOTTED => 16:58

Dist	COUNTY	ROUTE	POST MILES TOTAL PROJECT	SHEET No.	TOTAL SHEETS
12	Ora	91	R9.2/R15.9	52	86

06-15-10
REGISTERED CIVIL ENGINEER DATE

7-26-10
PLANS APPROVAL DATE

REGISTERED PROFESSIONAL ENGINEER
YENHAI M. NGUYEN
No. C62100
Exp. 9/30/11
CIVIL
STATE OF CALIFORNIA

THE STATE OF CALIFORNIA OR ITS OFFICERS OR AGENTS SHALL NOT BE RESPONSIBLE FOR THE ACCURACY OR COMPLETENESS OF SCANNED COPIES OF THIS PLAN SHEET.

MATERIAL SUMMARY-(CONTRACTOR FURNISHED SIGNS)

SHEET No.	SIGN No.	SIGN CODE	SIGN SIZE L x D	SINGLE FACED	BACKGROUND		LEGEND		FURNISH SINGLE SHEET ALUMINUM SIGN UNFRAMED		DESCRIPTION
					SHEETING COLOR	RETROREFLECTIVE ASTM TYPE	SHEETING COLOR	RETROREFLECTIVE ASTM TYPE	0.063" SQFT	0.080" SQFT	
S-1	1-2	W4-7 (L+)	48" x 48"	X	Y	IV	B	NONE		16	THROUGH TRAFFIC MERGE LEFT
S-2	2-1	R5-1	36" x 36"	X	W	IV	W/R	NONE	9		DO NOT ENTER
		R5-1A	36" x 24"	X	R	IV	W	NONE	6		WRONG WAY
	2-2	R5-1	36" x 36"	X	W	IV	W/R	NONE	9		DO NOT ENTER
		R5-1A	36" x 24"	X	R	IV	W	NONE	6		WRONG WAY
	2-3	R6-1(L) CA	36" x 12"	X	B	IV	W/B	NONE	3		ONE WAY
		R6-1(R) CA	36" x 12"	X	B	IV	W/B	NONE	3		ONE WAY
S-3	3-2	W4-7 (L+)	48" x 48"	X	Y	IV	B	NONE		16	THROUGH TRAFFIC MERGE LEFT
S-4	4-2	M3-2	26" x 12"	X	G	IV	W	NONE	2.17		EAST
		G28-2 (CA)	25" x 24"	X	G	IV	W	NONE	4.17		91
S-5	5-2	M3-2	26" x 12"	X	G	IV	W	NONE	2.17		EAST
		G28-2 (CA)	25" x 24"	X	G	IV	W	NONE	4.17		91
TOTAL									48.65	32	

LEGEND:

G = GREEN
W = WHITE
B = Black
Y = YELLOW
R = RED

NOTE: CALIFORNIA SIGN CODES ARE DESIGNATED BY (CA). OTHERWISE, FEDERAL SIGN CODES ARE SHOWN

SIGN QUANTITIES
SQ-2

REVISED BY	DATE REVISED
Y. NGUYEN	04-14-10

YENHAI NGUYEN — CALCULATED-DESIGNED BY
KEITH TA — CHECKED BY
FUNCTIONAL SUPERVISOR: LISA ALVISO

STATE OF CALIFORNIA - DEPARTMENT OF TRANSPORTATION
Caltrans® DESIGN BRANCH B

LAST REVISION 04-14-10 | DATE PLOTTED => 27-JUL-2010 | TIME PLOTTED => 16:58

Dist	COUNTY	ROUTE	POST MILES TOTAL PROJECT	SHEET No.	TOTAL SHEETS
12	Ora	91	R9.2/R15.9	53	86

REGISTERED CIVIL ENGINEER 06-15-10 DATE

7-26-10
PLANS APPROVAL DATE

REGISTERED PROFESSIONAL ENGINEER
YENHAI M. NGUYEN
No. C62100
Exp. 9/30/11
CIVIL
STATE OF CALIFORNIA

THE STATE OF CALIFORNIA OR ITS OFFICERS OR AGENTS SHALL NOT BE RESPONSIBLE FOR THE ACCURACY OR COMPLETENESS OF SCANNED COPIES OF THIS PLAN SHEET.

TEMPORARY DRAINAGE INLET PROTECTION

SHEET No.	STATION	LOCATION	EA (N)
L-1	"C" 76+15.676	EB	1
L-1	"A" 79+98.324	EB	1
L-2	"A" 83+74.25	EB	1
L-2	"A" 83+98.39	EB	1
L-2	"A" 85+54.03	EB	1
L-2	"A" 89+00	EB	1
L-3	"A" 106+48.27	EB	1
L-4	"A" 107+97.16	EB	1
L-4	"A" 110+94.29	EB	1
L-5	"A" 119+63.18	EB	1
L-5	"A" 121+22.58	EB	1
L-5	"A" 125+72.39	EB	1
L-12	"A" 203+00	EB	1
L-12	"A" 206+73.29	EB	1
L-12	"A" 206+98.20	EB	1
L-18	"A" 278+92.34	EB	1
L-18	"A" 278+98.58	EB	1
L-18	"A" 279+22.84	EB	1
L-18	"A" 282+43.29	EB	1
L-18	"A" 282+49.39	EB	1
L-18	"A" 282+72.54	EB	1
L-19	"A" 286+07.66	EB	1
L-19	"A" 286+16.81	EB	1
L-19	"D" 290+96.64	EB	1
L-19	"D" 291+38.47	EB	1
L-23	"D" 343+77.55	EB	1
L-23	"D" 346+39.53	EB	1
L-24	"D" 351+73.29	EB	1
L-25	"D" 365+97.39	EB	1
L-25	"D" 367+22.94	EB	1
L-25	"D" 368+52.52	EB	1
L-25	"D" 369+74.56	EB	1
L-26	"D" 378+39.66	EB	2
L-26	"D" 389+51.33	EB	1
L-27	"D" 388+66.42	EB	1
L-27	"D" 395+75.49	EB	1
L-27	"D" 396+49.32	EB	1
L-27	"D" 397+24.38	EB	1
L-27	"D" 398+03.51	EB	1
L-28	"D" 400+53.23	EB	1
L-28	"D" 402+52.11	EB	1
TOTAL			42

(N) NOT A SEPARATE PAY ITEM, FOR INFORMATION ONLY

GROOVE EXISTING CONCRETE PAVEMENT

SHEET No.	STATION TO STATION	LOCATION	No. OF LANES (N)	GROOVE EXISTING CONCRETE PAVEMENT SQYD
L-1	"C" 71+50 TO "A" 82+50	EB	6	8778.78
L-2	"A" 82+50 TO "A" 94+50	EB	6	9805.04
L-3	"A" 94+50 TO "A" 107+50	EB	5	9051.06
L-4	"A" 107+50 TO "A" 117+50	EB	5	6736.61
L-5	"A" 117+50 TO "A" 128+50	EB	5	7280.67
L-6	"A" 128+50 TO "A" 140+50	EB	5	7930
L-7	"A" 140+50 TO "A" 153+50	EB	5	8718.04
L-8	"A" 153+50 TO "A" 165+50	EB	5	8067.46
L-9	"A" 165+50 TO "A" 176+50	EB	5	7372.67
L-10	"A" 176+50 TO "A" 187+00	EB	4	5692.81
L-11	"A" 187+00 TO "A" 187+93.15	EB	4	534.68
L-11	"A" 189+43.15 TO "A" 197+50	EB	4	4372.88
L-12	"A" 197+50 TO "A" 209+00	EB	4	6158.31
L-13	"A" 209+00 TO "A" 222+50	EB	4	6732.79
L-14	"A" 222+50 TO "A" 235+50	EB	4	6236.20
L-15	"A" 235+50 TO "A" 248+50	EB	4	6326.69
L-16	"A" 248+50 TO "A" 261+50	EB	4	6921.55
L-17	"A" 261+50 TO "A" 273+50	EB	4	6402.48
L-18	"A" 273+50 TO "A" 285+50	EB	4	6396.57
L-19	"A" 285+50 TO "D" 297+50	EB	4	6404.31
L-20	"D" 297+50 TO "D" 310+00	EB	4	6683.79
L-21	"D" 310+00 TO "D" 322+50	EB	4	6668.32
L-22	"D" 322+50 TO "D" 336+50	EB	4	7679.91
L-23	"D" 336+50 TO "D" 341+71.24	EB	4	2814.22
L-23	"D" 343+27.65 TO "D" 348+50	EB	4	2922.54
L-24	"D" 348+50 TO "D" 362+50	EB	4	7647.48
L-25	"D" 362+50 TO "D" 375+50	EB	4	6953.87
L-26	"D" 375+50 TO "D" 388+50	EB	4	6975.56
L-27	"D" 388+50 TO "D" 400+50	EB	4	6432.89
L-28	"D" 400+50 TO "D" 414+00	EB	4	7268.82
L-29	"D" 414+00 TO "D" 418+00	EB	4	2141.33
TOTAL				200108.33

METAL BEAM GUARD RAILING QUANTITIES

SHEET No.	STATION	END ANCHOR ASSEMBLY (TYPE SFT) EA	MBGR (WOOD POST) LF	GUARD RAILING DELINEATOR EA
L-6	"A" 130+68.52 TO "A" 131+04.48	1	31.25	4
TOTAL		1	31.25	4

GRIND EXISTING CONCRETE PAVEMENT

SHEET No.	STATION TO STATION	LOCATION	No. OF LANES	GRIND EXISTING CONCRETE PAVEMENT SQYD
L-1	"C" 71+50 TO "A" 82+50	EB	6	8778.78
L-2	"A" 82+50 TO "A" 94+50	EB	6	9805.04
L-3	"A" 94+50 TO "A" 107+50	EB	5	9051.06
L-4	"A" 107+50 TO "A" 112+48.85	EB	5	3395.44
TOTAL				31030.32

DIKE QUANTITIES

SHEET No.	STATION	REMOVE AC DIKE LF	PLACE HMA DIKE (TYPE C) LF	PLACE HMA DIKE (TYPE F) LF	HOT MIX ASPHALT TON
L-1	"C" 75+22.9 TO "C" 76+38.42	115.52			
L-1	"C" 75+22.9 TO "C" 75+88.41		65.52		0.56
L-1	"C" 75+88.41 TO "C" 76+15.7			27.29	0.4
L-1	"C" 76+19.7 TO "C" 76+38.42			18.72	0.28
L-2	"A" 83+45.02 TO "A" 85+09.77	164.75			
L-2	"A" 83+45.02 TO "A" 84+09.77		64.75		0.55
L-2	"A" 84+09.77 TO "A" 85+09.77			100	1.47
TOTAL		280.27	130.27	146.01	3.26

SUMMARY OF QUANTITIES

Q-1

STATE OF CALIFORNIA - DEPARTMENT OF TRANSPORTATION
Caltrans DESIGN BRANCH B
FUNCTIONAL SUPERVISOR: LISA ALVISO
CALCULATED-DESIGNED BY: YENHAI NGUYEN
CHECKED BY: KEITH TA
REVISED BY: Y. NGUYEN
DATE REVISED: 04-14-10

LAST REVISION 04-14-10 | DATE PLOTTED => 27-JUL-2010 | TIME PLOTTED => 16:58

Dist	COUNTY	ROUTE	POST MILES TOTAL PROJECT	SHEET No.	TOTAL SHEETS
12	Ora	91	R9.2/R15.9	54	86

REGISTERED ELECTRICAL ENGINEER 06-15-10 DATE

7-26-10
PLANS APPROVAL DATE

REGISTERED PROFESSIONAL ENGINEER F. HORMOZI No. E 14460 Exp. 6/30/12 ELECTRICAL STATE OF CALIFORNIA

THE STATE OF CALIFORNIA OR ITS OFFICERS OR AGENTS SHALL NOT BE RESPONSIBLE FOR THE ACCURACY OR COMPLETENESS OF SCANNED COPIES OF THIS PLAN SHEET.

FOR COMPLETE RIGHT OF WAY AND ACCURATE ACCESS DATA,
CONTACT RIGHT OF WAY ENGINEERING AT THE DISTRICT OFFICE.

NOTES: (THIS SHEET)

1. ABANDON EXISTING MAINLINE LOOP DETECTOR ON EB SR-91.

[2] EXISTING EXPRESS LANE LOOP DETECTORS ON EB SR-91 TO REMAIN IN PLACE.

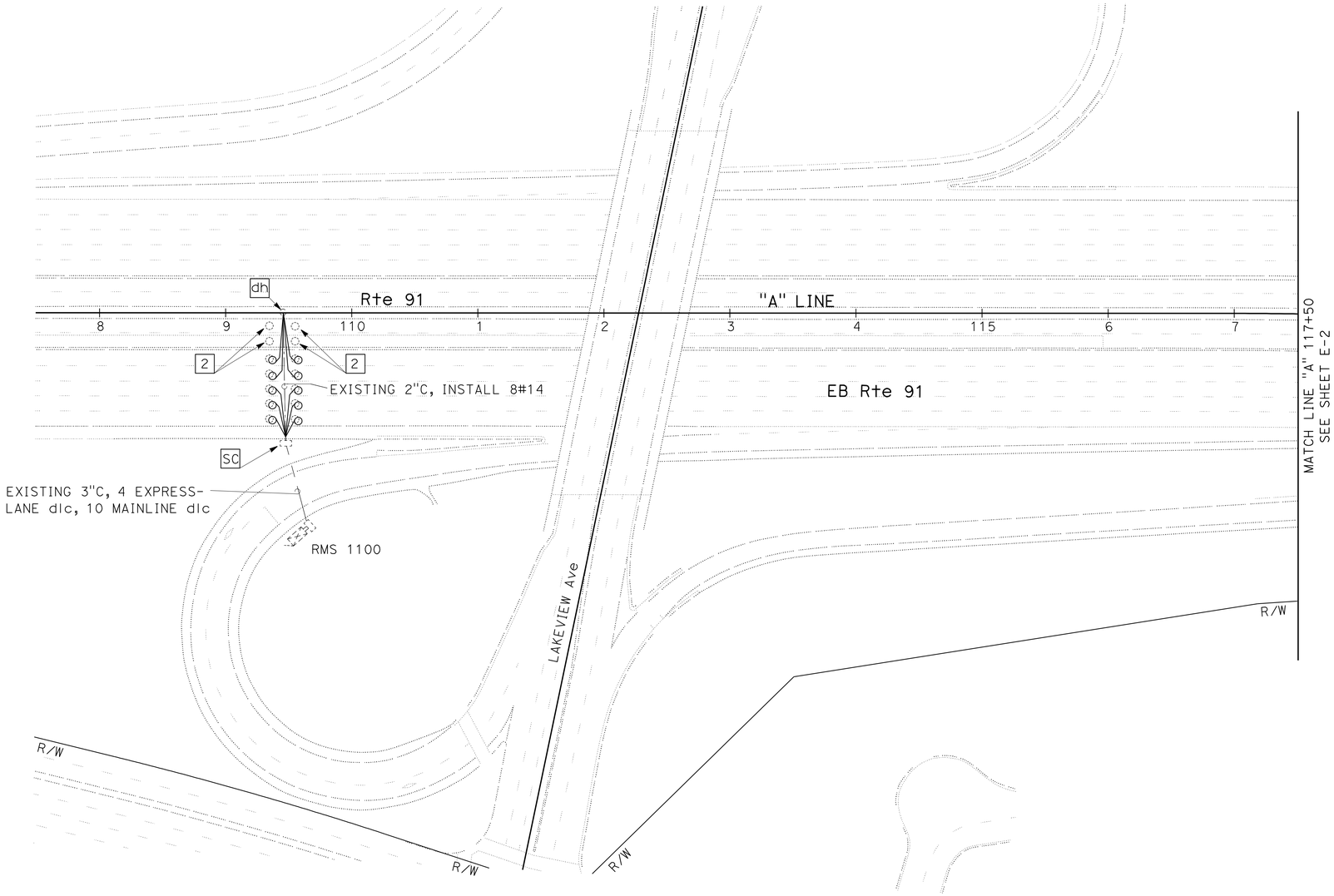

INDUCTIVE LOOP DETECTOR

SCALE: 1" = 50'

E-1

THIS PLAN IS ACCURATE FOR ELECTRICAL WORK ONLY.

STATE OF CALIFORNIA - DEPARTMENT OF TRANSPORTATION
Caltrans® **ELECTRICAL DESIGN**

FUNCTIONAL SUPERVISOR: SHAHRAM SHAHRIARI
CALCULATED-DESIGNED BY: FEDRICO HORMOZI
CHECKED BY: FEDRICO HORMOZI
REVISED BY
DATE REVISED

LAST REVISION 03-15-10
DATE PLOTTED => 27-JUL-2010
TIME PLOTTED => 17:00

Dist	COUNTY	ROUTE	POST MILES TOTAL PROJECT	SHEET No.	TOTAL SHEETS
12	Ora	91	R9.2/R15.9	55	86

REGISTERED ELECTRICAL ENGINEER 06-15-10 DATE

7-26-10
PLANS APPROVAL DATE

REGISTERED PROFESSIONAL ENGINEER
F. HORMOZI
No. E 14460
Exp. 6/30/12
ELECTRICAL
STATE OF CALIFORNIA

THE STATE OF CALIFORNIA OR ITS OFFICERS OR AGENTS SHALL NOT BE RESPONSIBLE FOR THE ACCURACY OR COMPLETENESS OF SCANNED COPIES OF THIS PLAN SHEET.

FOR COMPLETE RIGHT OF WAY AND ACCURATE ACCESS DATA,
CONTACT RIGHT OF WAY ENGINEERING AT THE DISTRICT OFFICE.

NOTES: (THIS SHEET)

1. ABANDON EXISTING MAINLINE LOOP DETECTOR ON EB SR-91.

2 EXISTING EXPRESS LANE LOOP DETECTORS ON EB SR-91 TO REMAIN IN PLACE.

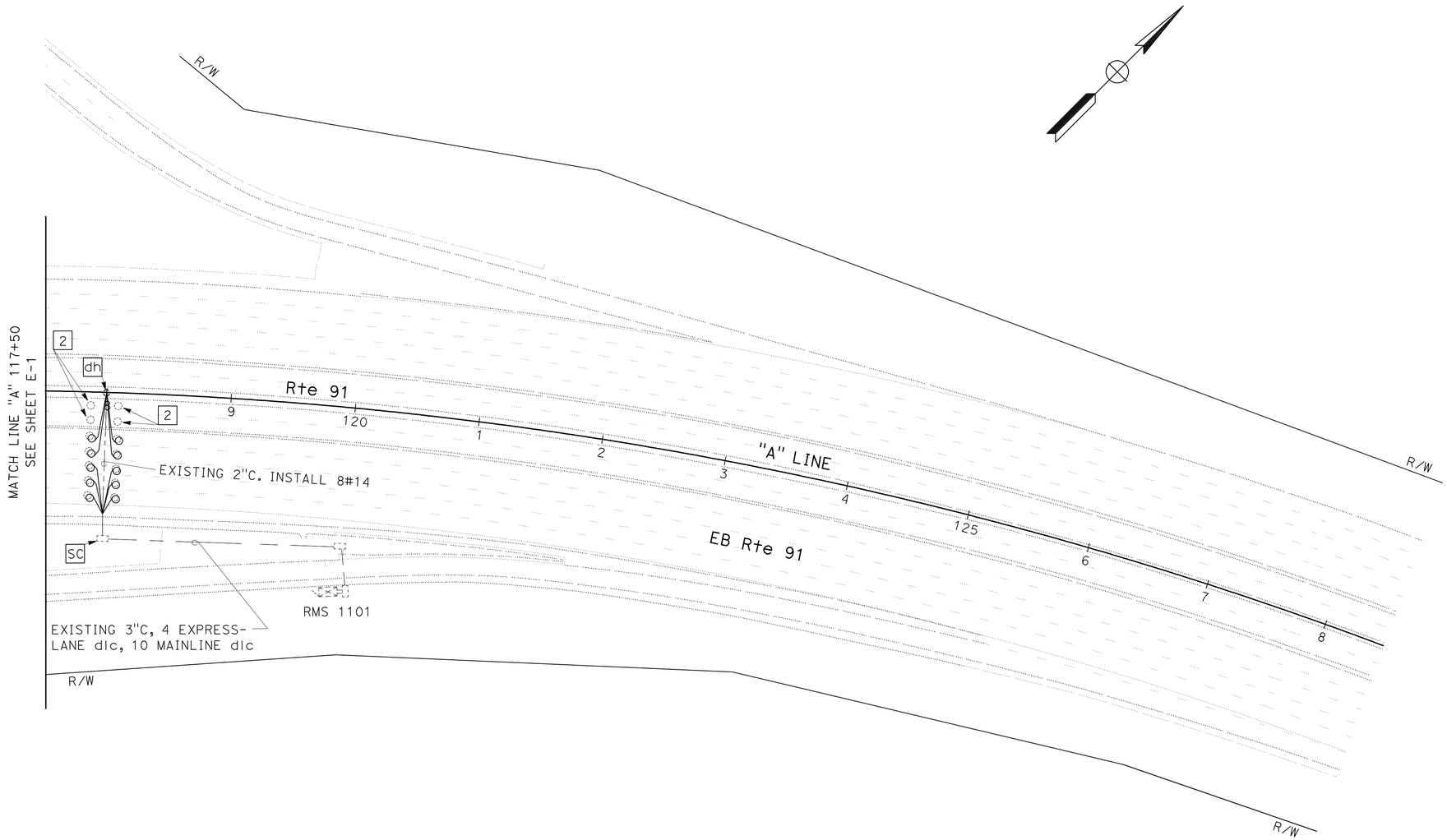

INDUCTIVE LOOP DETECTOR

SCALE: 1" = 50'

E-2

THIS PLAN IS ACCURATE FOR ELECTRICAL WORK ONLY.

STATE OF CALIFORNIA - DEPARTMENT OF TRANSPORTATION
ELECTRICAL DESIGN

FUNCTIONAL SUPERVISOR: SHAHRAM SHAHRIARI
CALCULATED-DESIGNED BY: FEDRICO HORMOZI
CHECKED BY: FEDRICO HORMOZI
REVISED BY
DATE REVISED

LAST REVISION 03-15-10
DATE PLOTTED => 27-JUL-2010
TIME PLOTTED => 17:01

Dist	COUNTY	ROUTE	POST MILES TOTAL PROJECT	SHEET No.	TOTAL SHEETS
12	Ora	91	R9.2/R15.9	56	86

REGISTERED ELECTRICAL ENGINEER 06-15-10 DATE

7-26-10
PLANS APPROVAL DATE

REGISTERED PROFESSIONAL ENGINEER
F. HORMOZI
No. E 14460
Exp. 6/30/12
ELECTRICAL
STATE OF CALIFORNIA

THE STATE OF CALIFORNIA OR ITS OFFICERS OR AGENTS SHALL NOT BE RESPONSIBLE FOR THE ACCURACY OR COMPLETENESS OF SCANNED COPIES OF THIS PLAN SHEET.

FOR COMPLETE RIGHT OF WAY AND ACCURATE ACCESS DATA,
CONTACT RIGHT OF WAY ENGINEERING AT THE DISTRICT OFFICE.

NOTES: (THIS SHEET)

1. ABANDON EXISTING MAINLINE LOOP DETECTOR ON EB SR-91.

[2] EXISTING EXPRESS LANE LOOP DETECTORS ON EB SR-91 TO REMAIN IN PLACE.

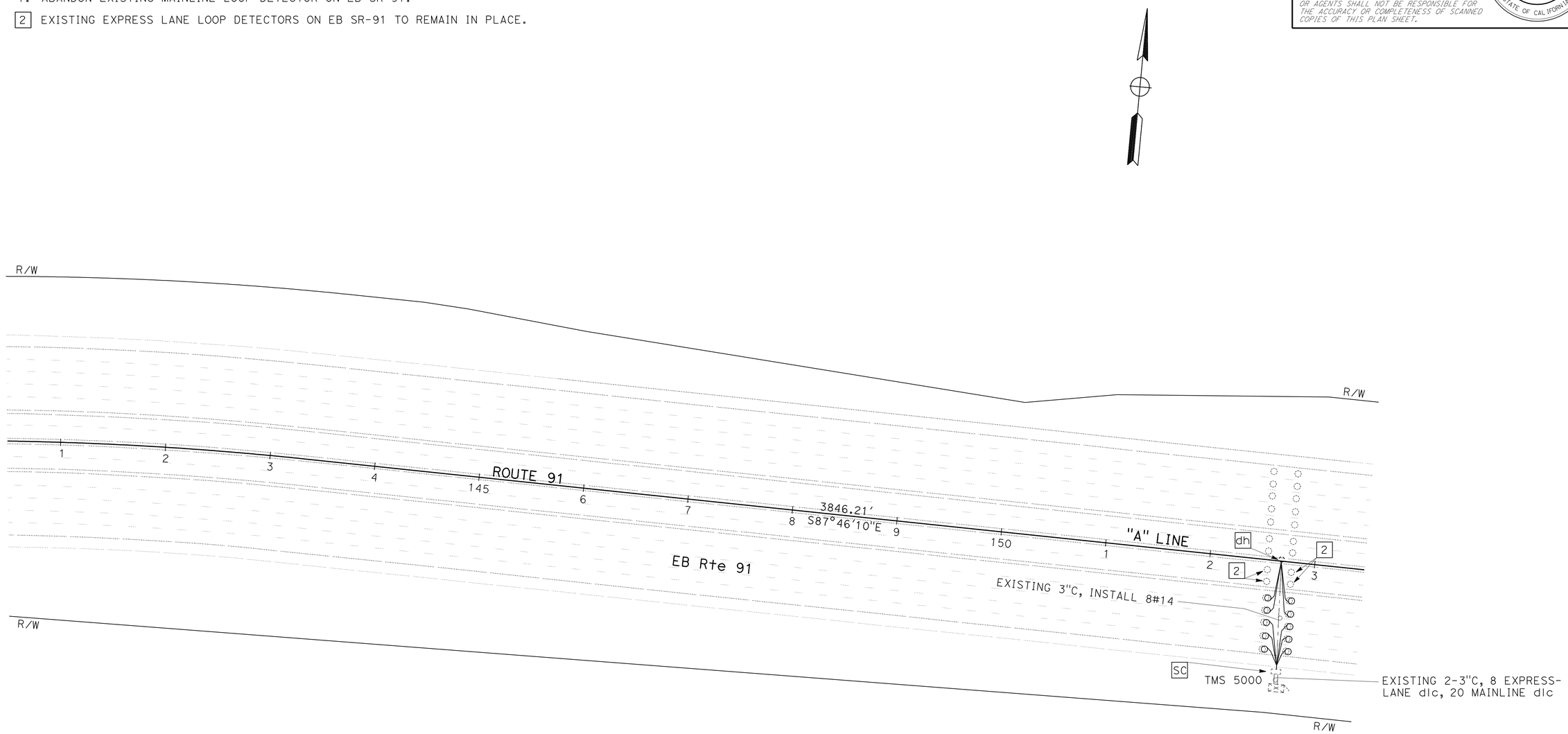

INDUCTIVE LOOP DETECTOR

SCALE: 1" = 50'

E-3

THIS PLAN IS ACCURATE FOR ELECTRICAL WORK ONLY.

STATE OF CALIFORNIA - DEPARTMENT OF TRANSPORTATION
Caltrans® **ELECTRICAL DESIGN**

FUNCTIONAL SUPERVISOR: SHAHRAM SHAHRIARI

CALCULATED-DESIGNED BY: FEDRICO HORMOZI
CHECKED BY: FEDRICO HORMOZI

REVISED BY
DATE REVISED

LAST REVISION 03-15-10
DATE PLOTTED => 27-JUL-2010
TIME PLOTTED => 17:01

Dist	COUNTY	ROUTE	POST MILES TOTAL PROJECT	SHEET No.	TOTAL SHEETS
12	Ora	91	R9.2/R15.9	57	86

REGISTERED ELECTRICAL ENGINEER 06-15-10 DATE

7-26-10
PLANS APPROVAL DATE

REGISTERED PROFESSIONAL ENGINEER
F. HORMOZI
No. E 14460
Exp 6/30/12
ELECTRICAL
STATE OF CALIFORNIA

THE STATE OF CALIFORNIA OR ITS OFFICERS OR AGENTS SHALL NOT BE RESPONSIBLE FOR THE ACCURACY OR COMPLETENESS OF SCANNED COPIES OF THIS PLAN SHEET.

FOR COMPLETE RIGHT OF WAY AND ACCURATE ACCESS DATA,
CONTACT RIGHT OF WAY ENGINEERING AT THE DISTRICT OFFICE.

NOTES: (THIS SHEET)

1. ABANDON EXISTING MAINLINE LOOP DETECTOR ON EB SR-91.

2 EXISTING EXPRESS LANE LOOP DETECTORS ON EB SR-91 TO REMAIN IN PLACE.

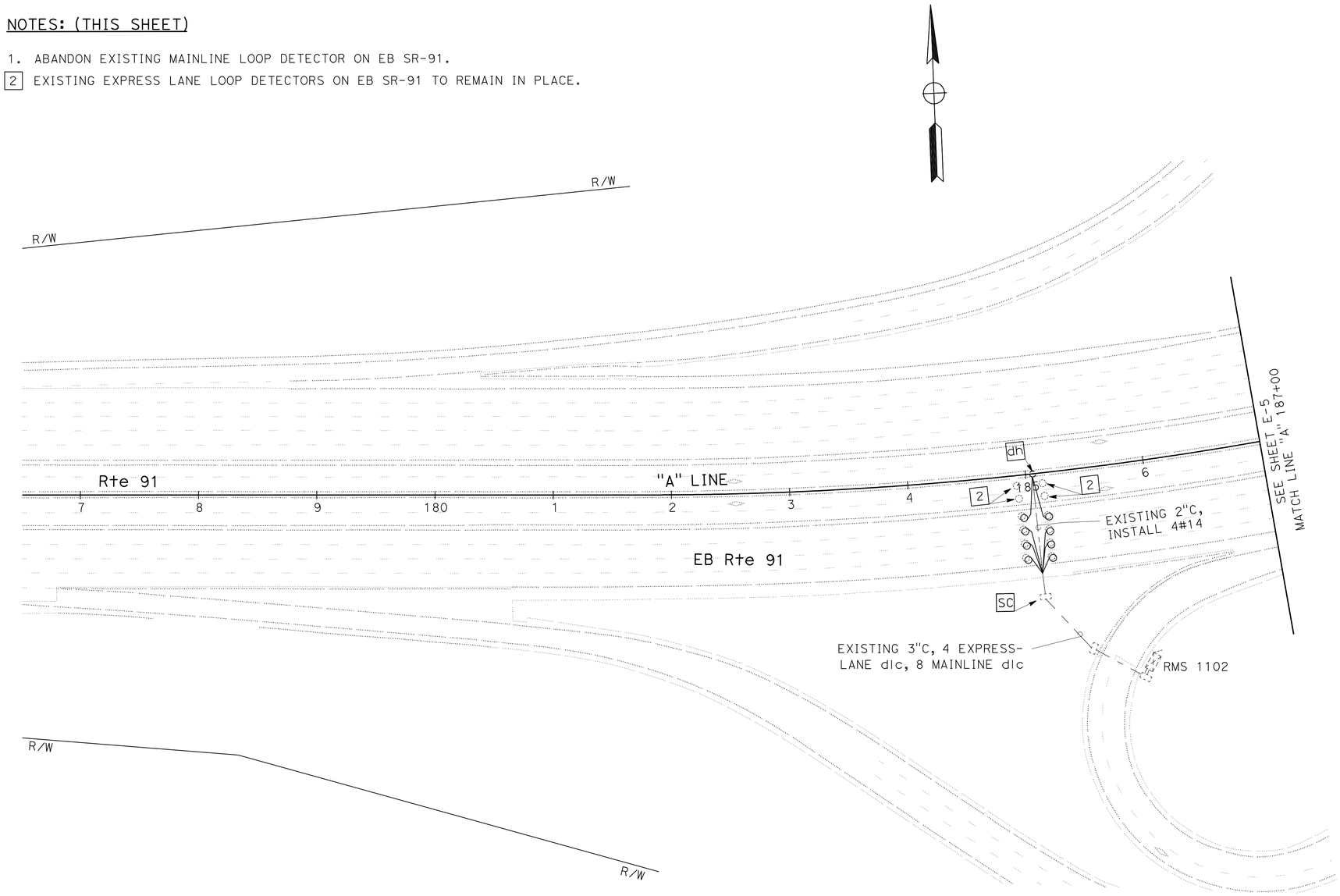

INDUCTIVE LOOP DETECTOR

SCALE: 1" = 50'

E-4

THIS PLAN IS ACCURATE FOR ELECTRICAL WORK ONLY.

STATE OF CALIFORNIA - DEPARTMENT OF TRANSPORTATION
Caltrans® ELECTRICAL DESIGN

FUNCTIONAL SUPERVISOR: SHAHRAM SHAHRIARI

CALCULATED-DESIGNED BY: FEDRICO HORMOZI
CHECKED BY: FEDRICO HORMOZI

REVISED BY
DATE REVISED

LAST REVISION 03-15-10
DATE PLOTTED => 27-JUL-2010
TIME PLOTTED => 17:01

Dist	COUNTY	ROUTE	POST MILES TOTAL PROJECT	SHEET No.	TOTAL SHEETS
12	Ora	91	R9.2/R15.9	58	86

REGISTERED ELECTRICAL ENGINEER 06-15-10 DATE

7-26-10
PLANS APPROVAL DATE

REGISTERED PROFESSIONAL ENGINEER
F. HORMOZI
No. E 14460
Exp. 6/30/12
ELECTRICAL
STATE OF CALIFORNIA

THE STATE OF CALIFORNIA OR ITS OFFICERS OR AGENTS SHALL NOT BE RESPONSIBLE FOR THE ACCURACY OR COMPLETENESS OF SCANNED COPIES OF THIS PLAN SHEET.

FOR COMPLETE RIGHT OF WAY AND ACCURATE ACCESS DATA,
CONTACT RIGHT OF WAY ENGINEERING AT THE DISTRICT OFFICE.

NOTES: (THIS SHEET)

1. ABANDON EXISTING MAINLINE LOOP DETECTOR ON EB SR-91.

2 EXISTING EXPRESS LANE LOOP DETECTORS ON EB SR-91 TO REMAIN IN PLACE.

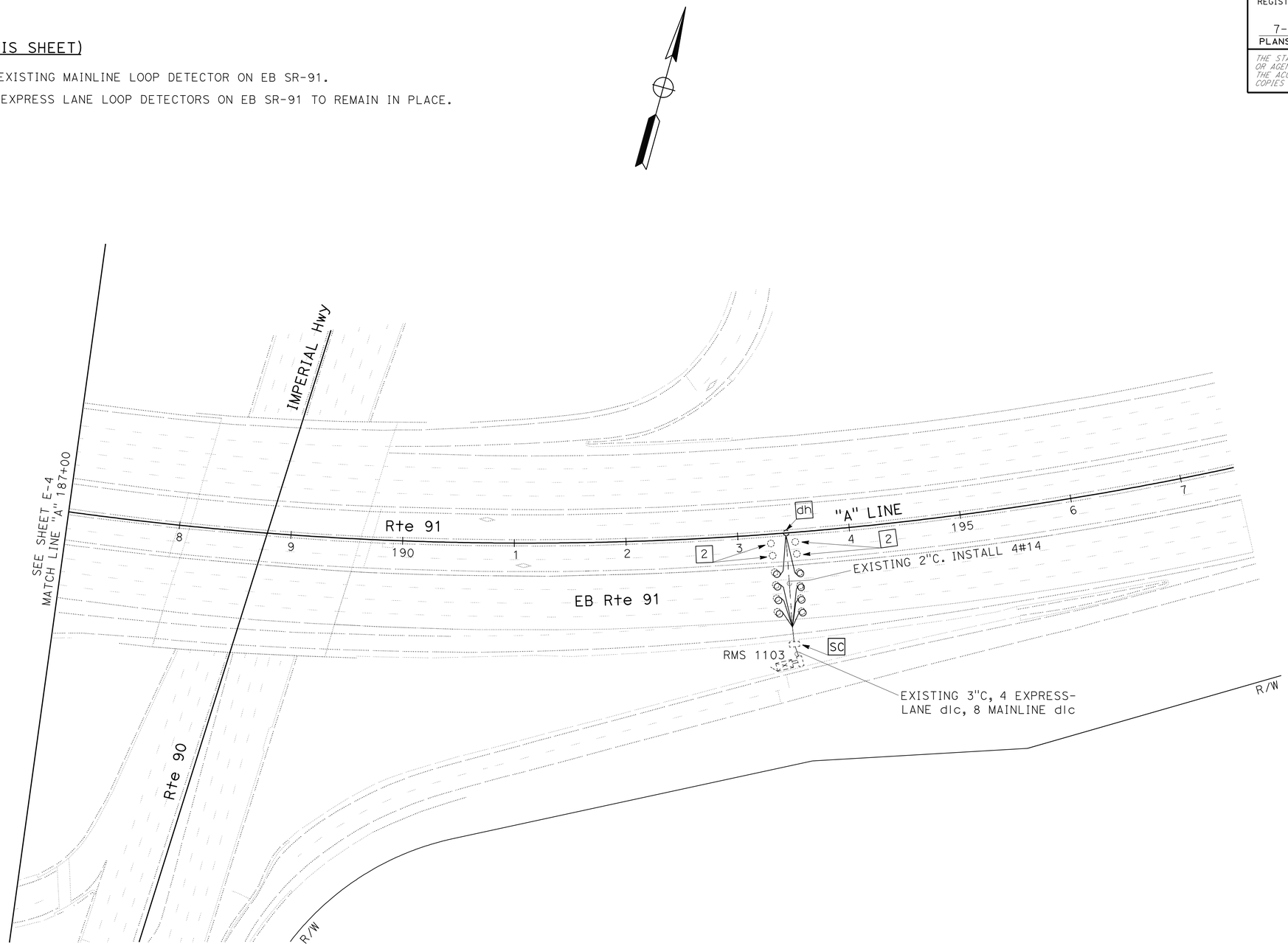

INDUCTIVE LOOP DETECTOR

SCALE: 1" = 50'

E-5

THIS PLAN IS ACCURATE FOR ELECTRICAL WORK ONLY.

STATE OF CALIFORNIA - DEPARTMENT OF TRANSPORTATION
Caltrans® **ELECTRICAL DESIGN**

FUNCTIONAL SUPERVISOR: SHAHRAM SHAHRIARI

CALCULATED-DESIGNED BY: FEDRICO HORMOZI
CHECKED BY: FEDRICO HORMOZI

REVISED BY
DATE REVISED

LAST REVISION 03-15-10
DATE PLOTTED => 27-JUL-2010
TIME PLOTTED => 17:01

Dist	COUNTY	ROUTE	POST MILES TOTAL PROJECT	SHEET No.	TOTAL SHEETS
12	Ora	91	R9.2/R15.9	59	86

REGISTERED ELECTRICAL ENGINEER 06-15-10 DATE

7-26-10
PLANS APPROVAL DATE

REGISTERED PROFESSIONAL ENGINEER
F. HORMOZI
No. E 14460
Exp. 6/30/12
ELECTRICAL
STATE OF CALIFORNIA

THE STATE OF CALIFORNIA OR ITS OFFICERS OR AGENTS SHALL NOT BE RESPONSIBLE FOR THE ACCURACY OR COMPLETENESS OF SCANNED COPIES OF THIS PLAN SHEET.

FOR COMPLETE RIGHT OF WAY AND ACCURATE ACCESS DATA,
CONTACT RIGHT OF WAY ENGINEERING AT THE DISTRICT OFFICE.

NOTES: (THIS SHEET)

1. ABANDON EXISTING MAINLINE LOOP DETECTOR ON EB SR-91.

[2] EXISTING EXPRESS LANE LOOP DETECTORS ON EB SR-91 TO REMAIN IN PLACE.

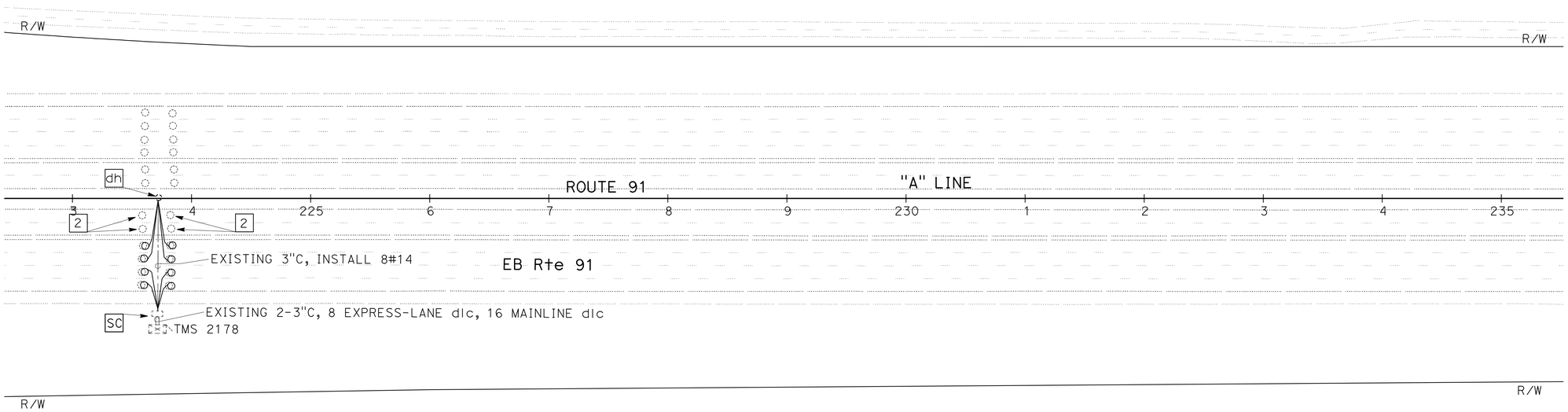

INDUCTIVE LOOP DETECTOR

SCALE: 1" = 50'

E-6

THIS PLAN IS ACCURATE FOR ELECTRICAL WORK ONLY.

REVISED BY	DATE REVISED

CALCULATED-DESIGNED BY	CHECKED BY
FEDRICO HORMOZI	FEDRICO HORMOZI

FUNCTIONAL SUPERVISOR: SHAHRAM SHAHRIARI

STATE OF CALIFORNIA - DEPARTMENT OF TRANSPORTATION

Caltrans® **ELECTRICAL DESIGN**

LAST REVISION 03-15-10 | DATE PLOTTED => 27-JUL-2010 | TIME PLOTTED => 17:01

Dist	COUNTY	ROUTE	POST MILES TOTAL PROJECT	SHEET No.	TOTAL SHEETS
12	Ora	91	R9.2/R15.9	60	86

REGISTERED ELECTRICAL ENGINEER 06-15-10 DATE

7-26-10
PLANS APPROVAL DATE

REGISTERED PROFESSIONAL ENGINEER
F. HORMOZI
No. E 14460
Exp. 6/30/12
ELECTRICAL
STATE OF CALIFORNIA

THE STATE OF CALIFORNIA OR ITS OFFICERS OR AGENTS SHALL NOT BE RESPONSIBLE FOR THE ACCURACY OR COMPLETENESS OF SCANNED COPIES OF THIS PLAN SHEET.

FOR COMPLETE RIGHT OF WAY AND ACCURATE ACCESS DATA,
CONTACT RIGHT OF WAY ENGINEERING AT THE DISTRICT OFFICE.

NOTES: (THIS SHEET)

1. ABANDON EXISTING MAINLINE LOOP DETECTOR ON EB SR-91.

[2] EXISTING EXPRESS LANE LOOP DETECTORS ON EB SR-91 TO REMAIN IN PLACE.

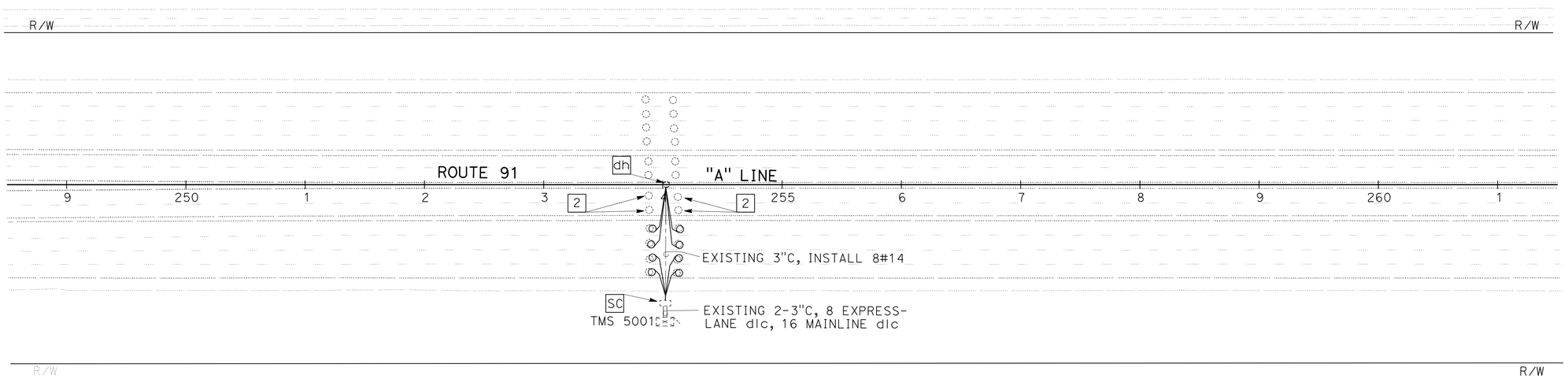

INDUCTIVE LOOP DETECTOR

SCALE: 1" = 50'

E-7

THIS PLAN IS ACCURATE FOR ELECTRICAL WORK ONLY.

REVISED BY	DATE REVISED

CALCULATED-DESIGNED BY	CHECKED BY
FEDRICO HORMOZI	FEDRICO HORMOZI

FUNCTIONAL SUPERVISOR: SHAHRAM SHAHRIARI

STATE OF CALIFORNIA - DEPARTMENT OF TRANSPORTATION
Caltrans® ELECTRICAL DESIGN

LAST REVISION 03-15-10 | DATE PLOTTED => 27-JUL-2010 | TIME PLOTTED => 17:01

BORDER LAST REVISED 4/11/2008 | RELATIVE BORDER SCALE IS IN INCHES 0 1 2 3 | USERNAME => trstrk | DGN FILE => f0K680ua007.dgn | CU 12390 | EA 0K6801

Dist	COUNTY	ROUTE	POST MILES TOTAL PROJECT	SHEET No.	TOTAL SHEETS
12	Ora	91	R9.2/R15.9	61	86

REGISTERED ELECTRICAL ENGINEER 06-15-10 DATE

7-26-10
PLANS APPROVAL DATE

REGISTERED PROFESSIONAL ENGINEER
F. HORMOZI
No. E 14460
Exp.6/30/12
ELECTRICAL
STATE OF CALIFORNIA

THE STATE OF CALIFORNIA OR ITS OFFICERS OR AGENTS SHALL NOT BE RESPONSIBLE FOR THE ACCURACY OR COMPLETENESS OF SCANNED COPIES OF THIS PLAN SHEET.

FOR ACCURATE RIGHT OF WAY AND ACCESS DATA,
CONTACT RIGHT OF WAY ENGINEERING AT THE DISTRICT OFFICE.

NOTES: (THIS SHEET)

1. ABANDON EXISTING MAINLINE LOOP DETECTOR ON EB SR-91.

2 EXISTING EXPRESS LANE LOOP DETECTORS ON EB SR-91 TO REMAIN IN PLACE.

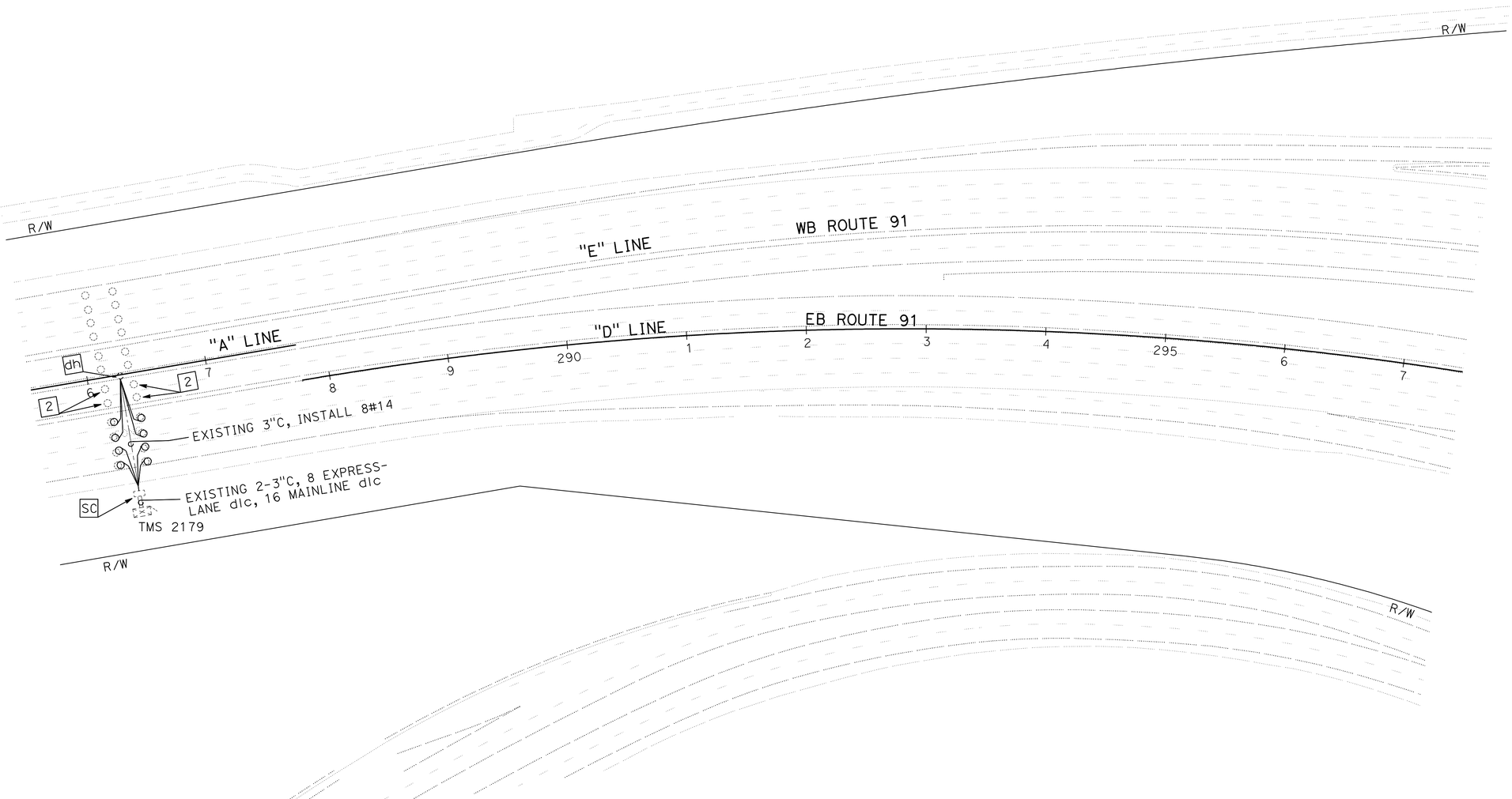

INDUCTIVE LOOP DETECTOR

SCALE: 1" = 50'

THIS PLAN IS ACCURATE FOR ELECTRICAL WORK ONLY.

E-8

REVISED BY	DATE REVISED

CALCULATED-DESIGNED BY: FEDRICO HORMOZI
CHECKED BY: FEDRICO HORMOZI

FUNCTIONAL SUPERVISOR: SHAHRAM SHAHRIARI

STATE OF CALIFORNIA - DEPARTMENT OF TRANSPORTATION
Caltrans® ELECTRICAL DESIGN

LAST REVISION 03-15-10 | DATE PLOTTED => 28-JUL-2010 | TIME PLOTTED => 08:25

Dist	COUNTY	ROUTE	POST MILES TOTAL PROJECT	SHEET No.	TOTAL SHEETS
12	Ora	91	R9.2/R15.9	62	86

REGISTERED ELECTRICAL ENGINEER 06-15-10 DATE

7-26-10
PLANS APPROVAL DATE

REGISTERED PROFESSIONAL ENGINEER
F. HORMOZI
No. E 14460
Exp. 6/30/12
ELECTRICAL
STATE OF CALIFORNIA

THE STATE OF CALIFORNIA OR ITS OFFICERS OR AGENTS SHALL NOT BE RESPONSIBLE FOR THE ACCURACY OR COMPLETENESS OF SCANNED COPIES OF THIS PLAN SHEET.

FOR ACCURATE RIGHT OF WAY AND ACCESS DATA,
CONTACT RIGHT OF WAY ENGINEERING AT THE DISTRICT OFFICE.

NOTES: (THIS SHEET)

1. ABANDON EXISTING MAINLINE LOOP DETECTOR ON EB SR-91.

2 EXISTING EXPRESS LANE LOOP DETECTORS ON EB SR-91 TO REMAIN IN PLACE.

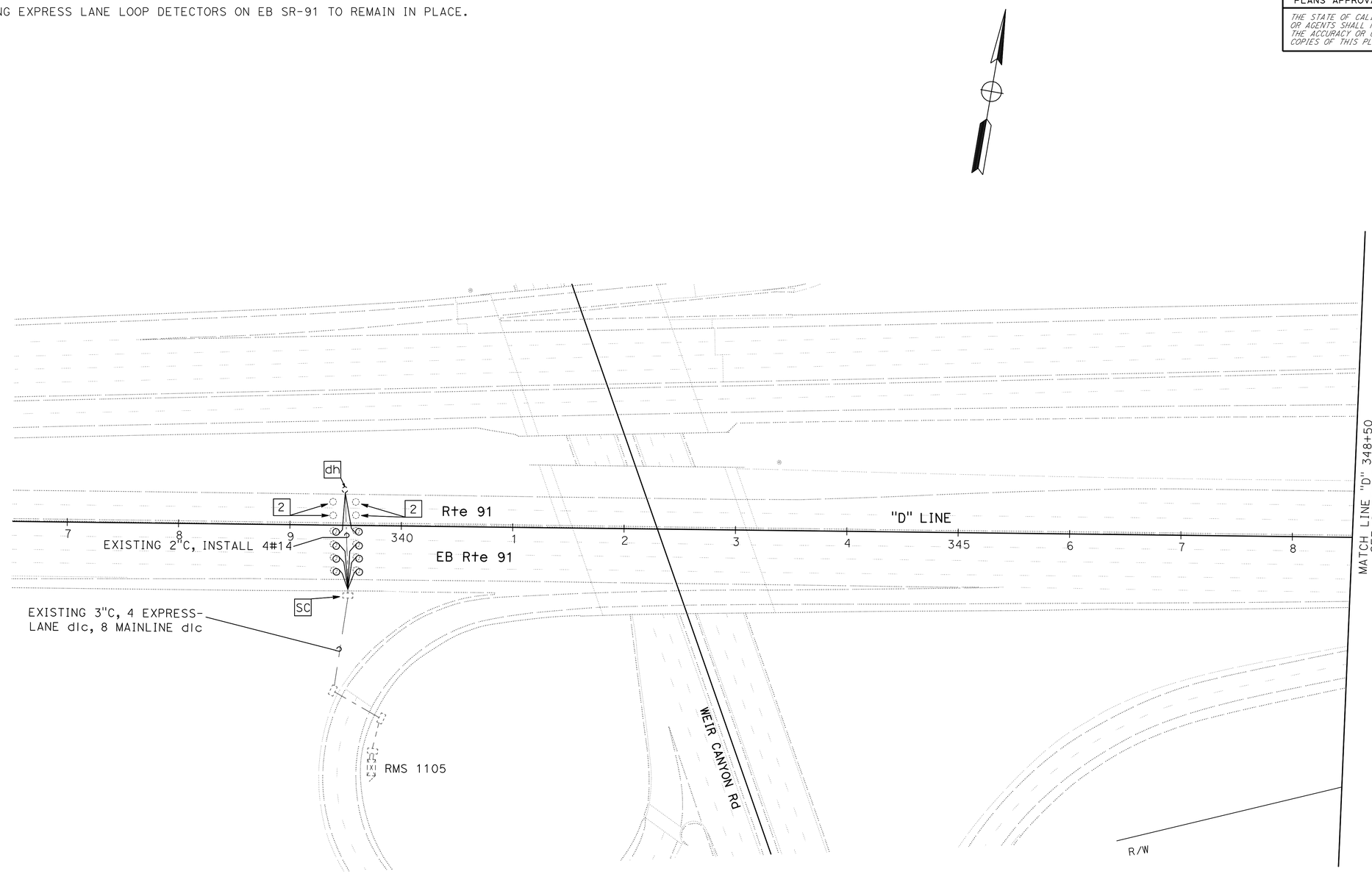

INDUCTIVE LOOP DETECTOR

SCALE: 1" = 50'

THIS PLAN IS ACCURATE FOR ELECTRICAL WORK ONLY.

E-9

STATE OF CALIFORNIA - DEPARTMENT OF TRANSPORTATION
Caltrans® **ELECTRICAL DESIGN**

FUNCTIONAL SUPERVISOR: SHAHRAM SHAHRIARI
CALCULATED-DESIGNED BY: FEDRICO HORMOZI
CHECKED BY: FEDRICO HORMOZI
REVISED BY
DATE REVISED

LAST REVISION 05-17-10
DATE PLOTTED => 28-JUL-2010
TIME PLOTTED => 08:25

Dist	COUNTY	ROUTE	POST MILES TOTAL PROJECT	SHEET No.	TOTAL SHEETS
12	Ora	91	R9.2/R15.9	63	86

REGISTERED ELECTRICAL ENGINEER 06-15-10 DATE

7-26-10
PLANS APPROVAL DATE

REGISTERED PROFESSIONAL ENGINEER
F. HORMOZI
No. E 14460
Exp.6/30/12
ELECTRICAL
STATE OF CALIFORNIA

THE STATE OF CALIFORNIA OR ITS OFFICERS OR AGENTS SHALL NOT BE RESPONSIBLE FOR THE ACCURACY OR COMPLETENESS OF SCANNED COPIES OF THIS PLAN SHEET.

FOR ACCURATE RIGHT OF WAY AND ACCESS DATA,
CONTACT RIGHT OF WAY ENGINEERING AT THE DISTRICT OFFICE.

NOTES: (THIS SHEET)

1. ABANDON EXISTING MAINLINE LOOP DETECTOR ON EB SR-91.

2 EXISTING EXPRESS LANE LOOP DETECTORS ON EB SR-91 TO REMAIN IN PLACE.

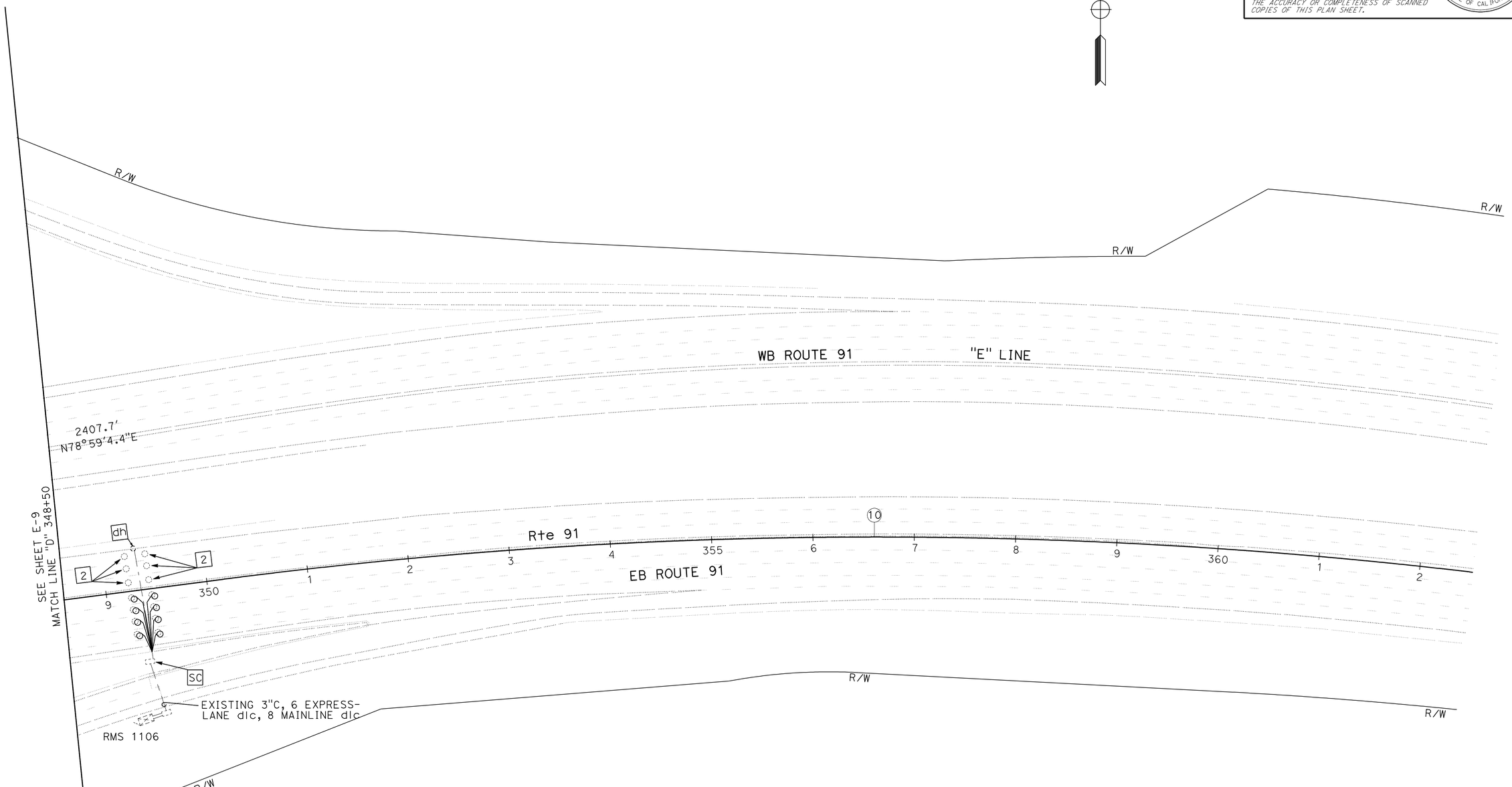

INDUCTIVE LOOP DETECTOR

SCALE: 1" = 50'

THIS PLAN IS ACCURATE FOR ELECTRICAL WORK ONLY.

E-10

STATE OF CALIFORNIA - DEPARTMENT OF TRANSPORTATION
Caltrans® ELECTRICAL DESIGN

FUNCTIONAL SUPERVISOR: SHAHRAM SHAHRIARI

CALCULATED-DESIGNED BY: FEDRICO HORMOZI
CHECKED BY: FEDRICO HORMOZI

REVISED BY
DATE REVISED

LAST REVISION 03-15-10
DATE PLOTTED => 28-JUL-2010
TIME PLOTTED => 08:25

Dist	COUNTY	ROUTE	POST MILES TOTAL PROJECT	SHEET No.	TOTAL SHEETS
12	Ora	91	R9.2/R15.9	64	86

REGISTERED ELECTRICAL ENGINEER 06-15-10 DATE

7-26-10
PLANS APPROVAL DATE

REGISTERED PROFESSIONAL ENGINEER
F. HORMOZI
No. E 14460
Exp. 6/30/12
ELECTRICAL
STATE OF CALIFORNIA

THE STATE OF CALIFORNIA OR ITS OFFICERS OR AGENTS SHALL NOT BE RESPONSIBLE FOR THE ACCURACY OR COMPLETENESS OF SCANNED COPIES OF THIS PLAN SHEET.

FOR ACCURATE RIGHT OF WAY AND ACCESS DATA,
CONTACT RIGHT OF WAY ENGINEERING AT THE DISTRICT OFFICE.

NOTES: (THIS SHEET)

1. ABANDON EXISTING MAINLINE LOOP DETECTOR ON EB SR-91.

2 EXISTING EXPRESS LANE LOOP DETECTORS ON EB SR-91 TO REMAIN IN PLACE.

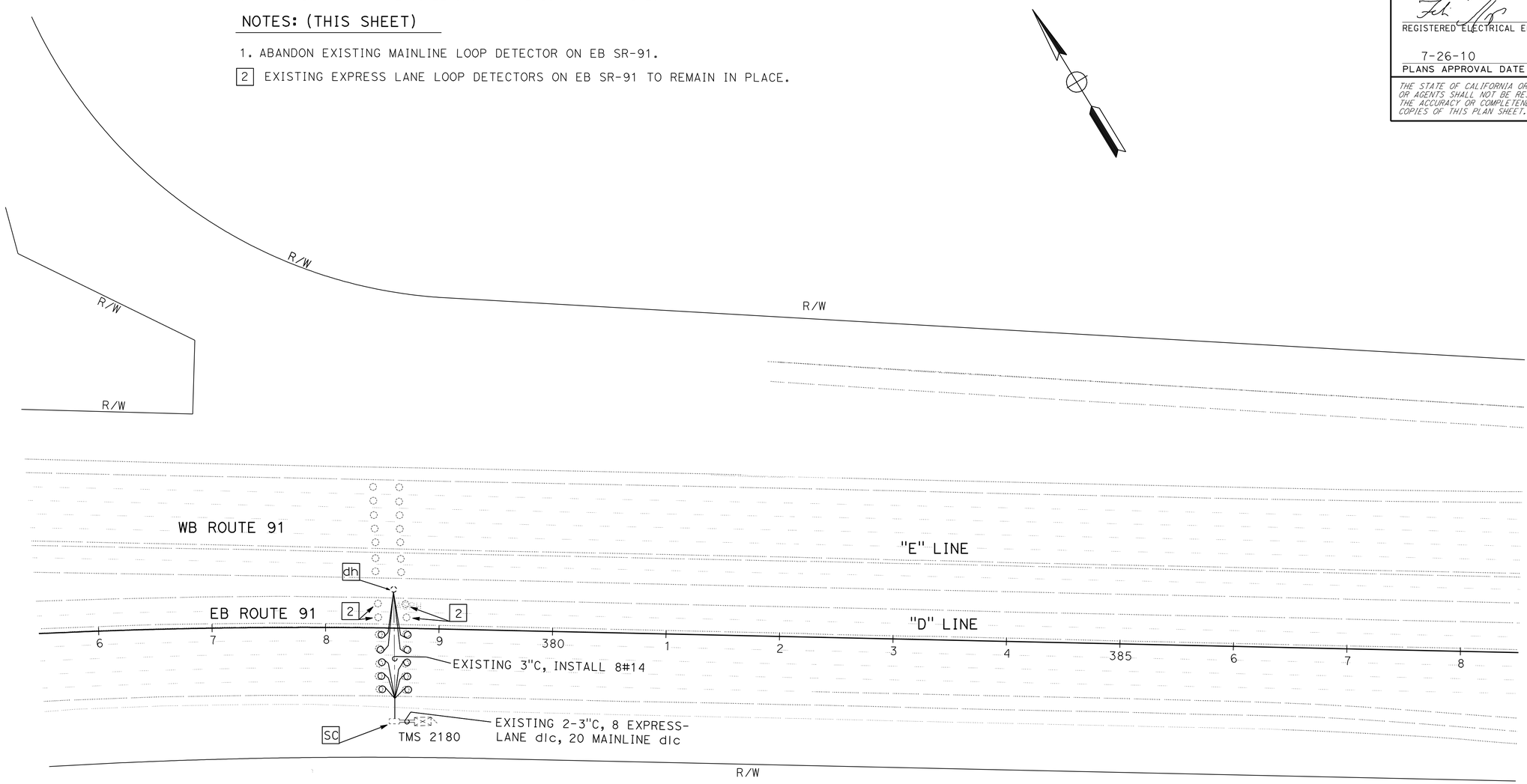

INDUCTIVE LOOP DETECTOR

SCALE: 1" = 50'

THIS PLAN IS ACCURATE FOR ELECTRICAL WORK ONLY.

E-11

STATE OF CALIFORNIA - DEPARTMENT OF TRANSPORTATION
Caltrans® **ELECTRICAL DESIGN**

FUNCTIONAL SUPERVISOR: SHAHRAM SHAHRIARI
CALCULATED-DESIGNED BY: FEDRICO HORMOZI
CHECKED BY: FEDRICO HORMOZI
REVISED BY
DATE REVISED

LAST REVISION 03-15-10
DATE PLOTTED => 27-JUL-2010
TIME PLOTTED => 16:28

Dist	COUNTY	ROUTE	POST MILES TOTAL PROJECT	SHEET No.	TOTAL SHEETS
12	Ora	91	R9.2/R15.9	65	86

REGISTERED ELECTRICAL ENGINEER 06-15-10 DATE

7-26-10
PLANS APPROVAL DATE

REGISTERED PROFESSIONAL ENGINEER
F. HORMOZI
No. E 14460
Exp.6/30/12
ELECTRICAL
STATE OF CALIFORNIA

THE STATE OF CALIFORNIA OR ITS OFFICERS OR AGENTS SHALL NOT BE RESPONSIBLE FOR THE ACCURACY OR COMPLETENESS OF SCANNED COPIES OF THIS PLAN SHEET.

FOR ACCURATE RIGHT OF WAY AND ACCESS DATA,
CONTACT RIGHT OF WAY ENGINEERING AT THE DISTRICT OFFICE.

NOTES: (THIS SHEET)

1. ABANDON EXISTING MAINLINE LOOP DETECTOR ON EB SR-91.

2 EXISTING EXPRESS LANE LOOP DETECTORS ON EB SR-91 TO REMAIN IN PLACE.

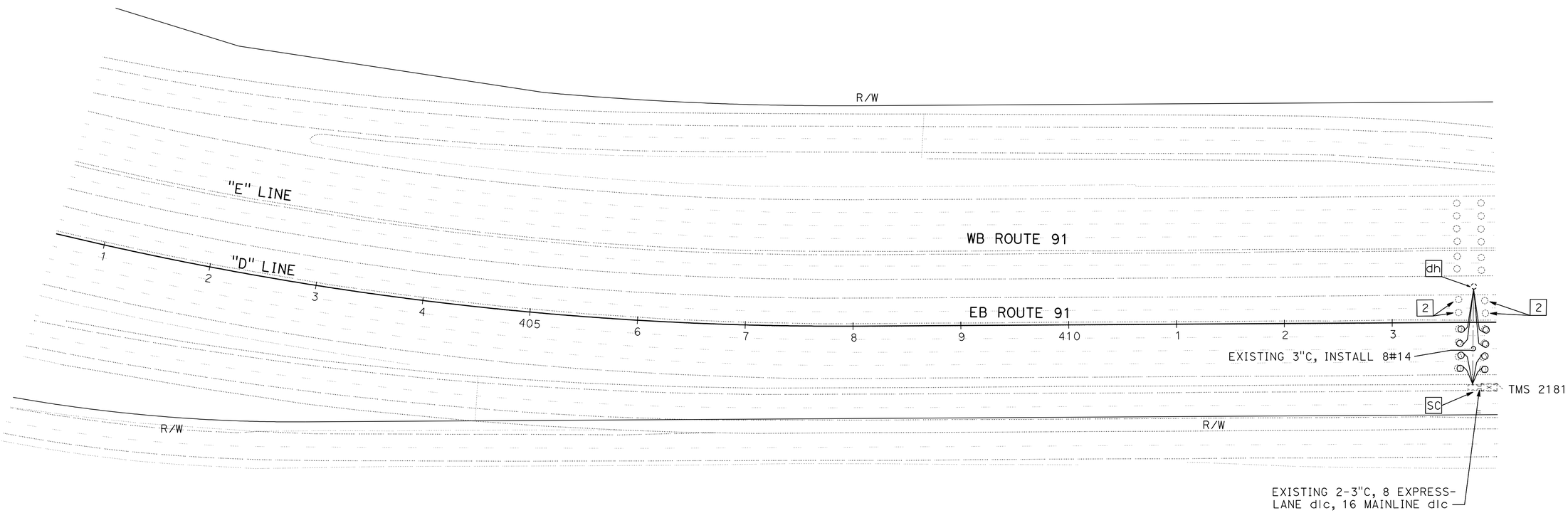

INDUCTIVE LOOP DETECTOR

SCALE: 1" = 50'

E-12

THIS PLAN IS ACCURATE FOR ELECTRICAL WORK ONLY.

STATE OF CALIFORNIA - DEPARTMENT OF TRANSPORTATION
Caltrans ELECTRICAL DESIGN

FUNCTIONAL SUPERVISOR: SHAHRAM SHAHRIARI
CALCULATED-DESIGNED BY: FEDRICO HORMOZI
CHECKED BY: FEDRICO HORMOZI
REVISED BY
DATE REVISED

LAST REVISION 03-15-10
DATE PLOTTED => 27-JUL-2010
TIME PLOTTED => 16:29

Dist	COUNTY	ROUTE	POST MILES TOTAL PROJECT	SHEET No.	TOTAL SHEETS
12	Ora	91	R9.2/R15.9	66	86

REGISTERED ELECTRICAL ENGINEER 06-15-10 DATE

7-26-10
PLANS APPROVAL DATE

REGISTERED PROFESSIONAL ENGINEER
F. HORMOZI
No. E 14460
Exp.6/30/12
ELECTRICAL
STATE OF CALIFORNIA

THE STATE OF CALIFORNIA OR ITS OFFICERS OR AGENTS SHALL NOT BE RESPONSIBLE FOR THE ACCURACY OR COMPLETENESS OF SCANNED COPIES OF THIS PLAN SHEET.

FOR ACCURATE RIGHT OF WAY AND ACCESS DATA,
CONTACT RIGHT OF WAY ENGINEERING AT THE DISTRICT OFFICE.

NOTES: (THIS SHEET)

1. SEE WIRING DIAGRAM ON SHEET E-14

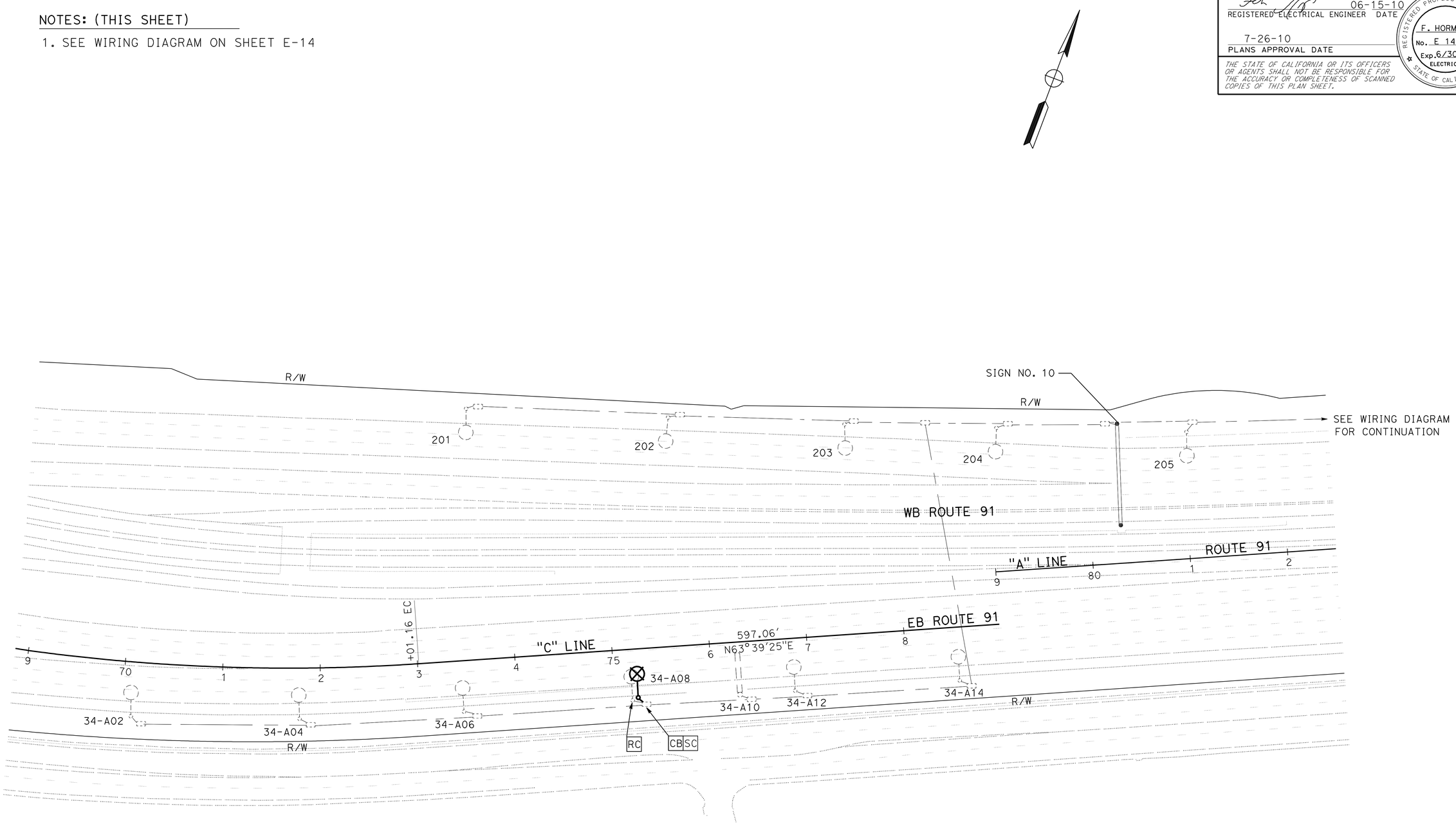

MODIFY LIGHTING

SCALE: 1" = 50'

E-13

THIS PLAN IS ACCURATE FOR ELECTRICAL WORK ONLY.

STATE OF CALIFORNIA - DEPARTMENT OF TRANSPORTATION
Caltrans®
ELECTRICAL DESIGN

FUNCTIONAL SUPERVISOR: SHAHRAM SHAHRIARI

CALCULATED-DESIGNED BY: FEDRICO HORMOZI
CHECKED BY: FEDRICO HORMOZI

REVISED BY
DATE REVISED

LAST REVISION 05-12-10
DATE PLOTTED => 27-JUL-2010
TIME PLOTTED => 16:29

Dist	COUNTY	ROUTE	POST MILES TOTAL PROJECT	SHEET No.	TOTAL SHEETS
12	Ora	91	R9.2/R15.9	67	86

REGISTERED ELECTRICAL ENGINEER 06-15-10 DATE

7-26-10
PLANS APPROVAL DATE

REGISTERED PROFESSIONAL ENGINEER
F. HORMOZI
No. E 14460
Exp. 6/30/12
ELECTRICAL
STATE OF CALIFORNIA

THE STATE OF CALIFORNIA OR ITS OFFICERS OR AGENTS SHALL NOT BE RESPONSIBLE FOR THE ACCURACY OR COMPLETENESS OF SCANNED COPIES OF THIS PLAN SHEET.

WIRING DIAGRAM LEGEND

- RC Exist 2#6 AWG CONDUCTORS
- RC Exist LAMP
- Exist SIGN LIGHTING EQUIPMENT TO REMAIN
- Exist 2#6 CONDUCTORS TO REMAIN
- Exist LAMP TO REMAIN
- SPLICE
- NEW 2#6 AWG CONDUCTORS
- NEW 310 W HPS LAMP

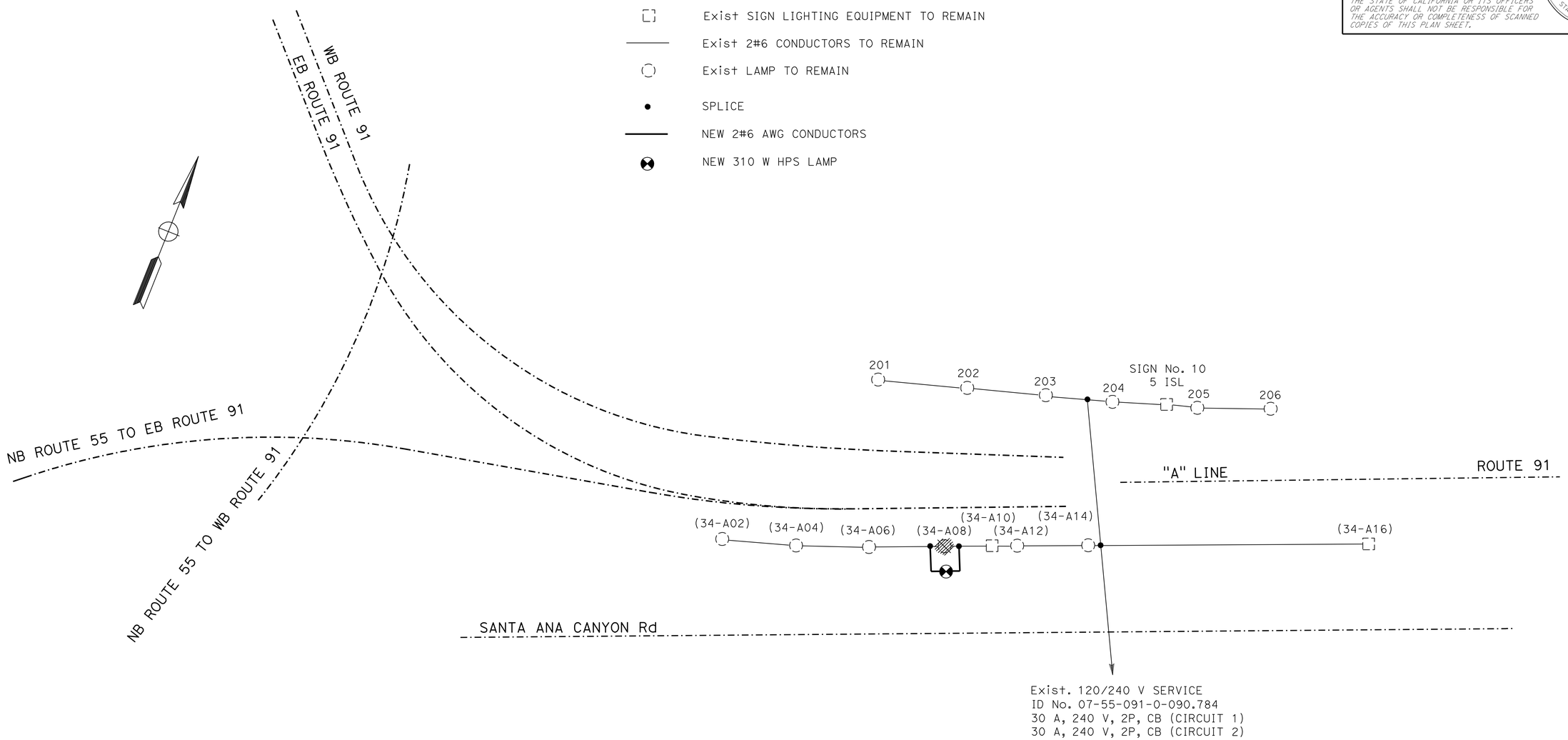

MODIFY LIGHTING (WIRING DIAGRAM)

NO SCALE

THIS PLAN IS ACCURATE FOR ELECTRICAL WORK ONLY.

E-14

STATE OF CALIFORNIA - DEPARTMENT OF TRANSPORTATION
Caltrans®
ELECTRICAL DESIGN

FUNCTIONAL SUPERVISOR: SHAHRAM SHAHRIARI
CALCULATED-DESIGNED BY: FEDRICO HORMOZI
CHECKED BY: MANSOUR FEIZ
REVISED BY
DATE REVISED

LAST REVISION 05-12-10
DATE PLOTTED => 27-JUL-2010
TIME PLOTTED => 16:29

DIST	COUNTY	ROUTE	POST MILES TOTAL PROJECT	SHEET NO.	TOTAL SHEETS
12	Ora	91	R9.2/R15.9	68	86

REGISTERED CIVIL ENGINEER

June 6, 2008
PLANS APPROVAL DATE

REGISTERED PROFESSIONAL ENGINEER
Donald E. Howe
No. C46402
Exp. 3-31-09
CIVIL
STATE OF CALIFORNIA

The State of California or its officers or agents shall not be responsible for the accuracy or completeness of electronic copies of this plan sheet.

To accompany plans dated 7-26-10

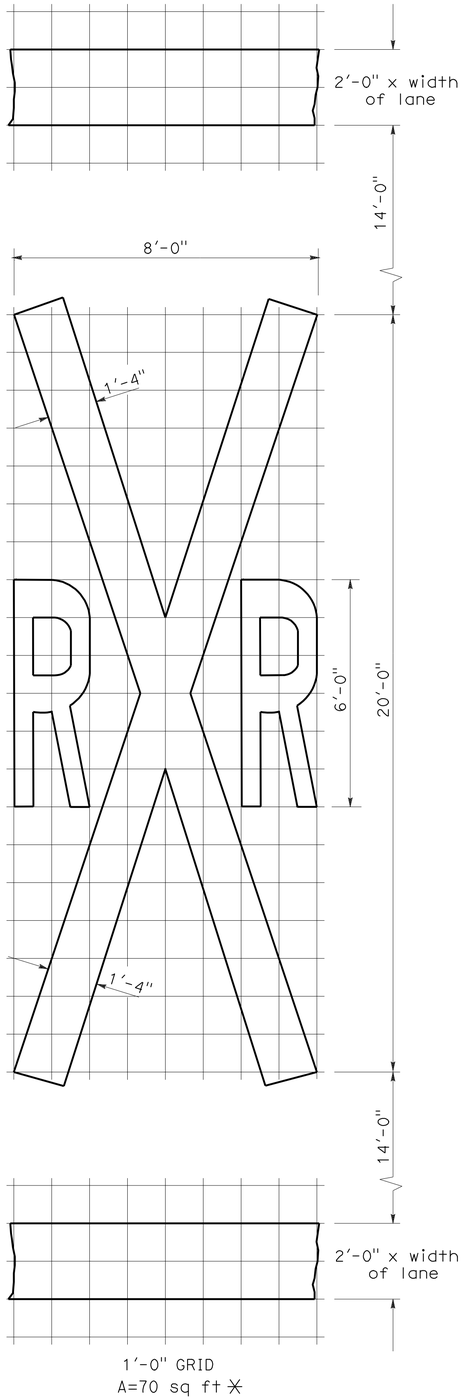

RAILROAD CROSSING SYMBOL

✳70 sq ft DOES NOT INCLUDE THE 2'-0" x VARIABLE WIDTH TRANSVERSE LINES.

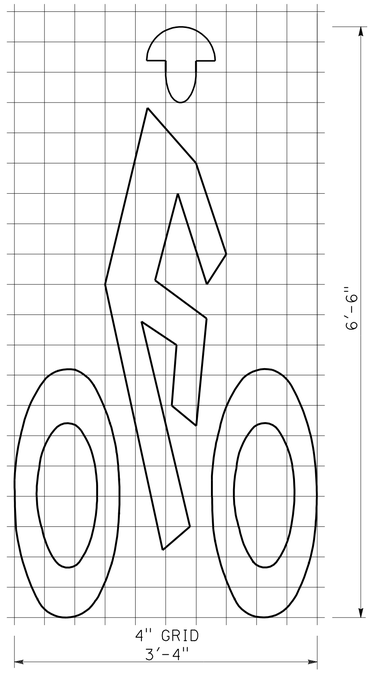

BIKE LANE SYMBOL

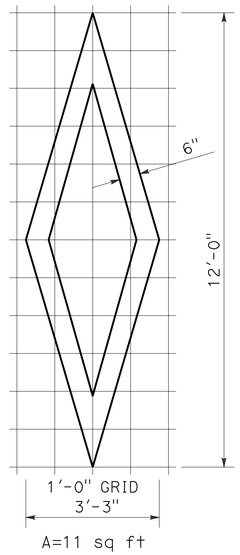

DIAMOND SYMBOL

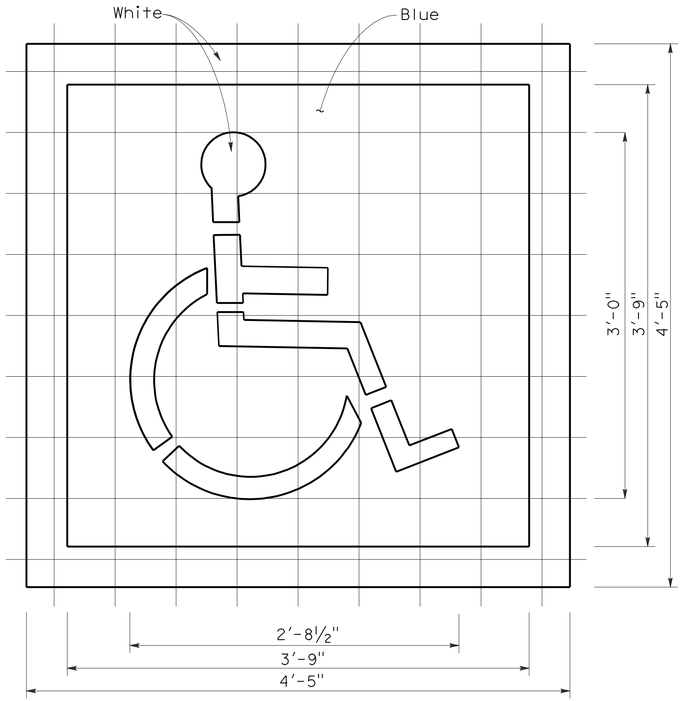

INTERNATIONAL SYMBOL OF ACCESSIBILITY MARKING

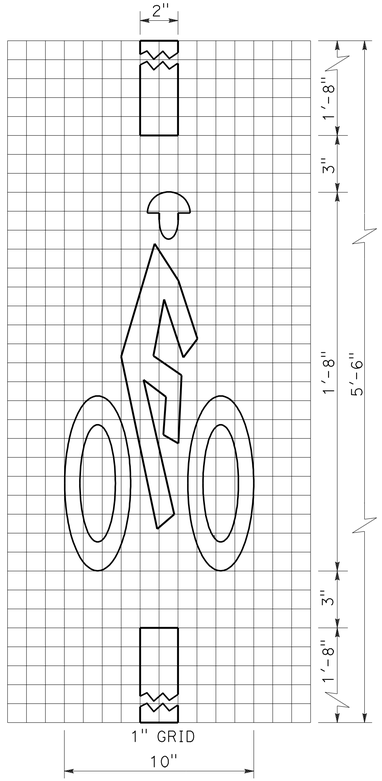

BICYCLE LOOP DETECTOR SYMBOL

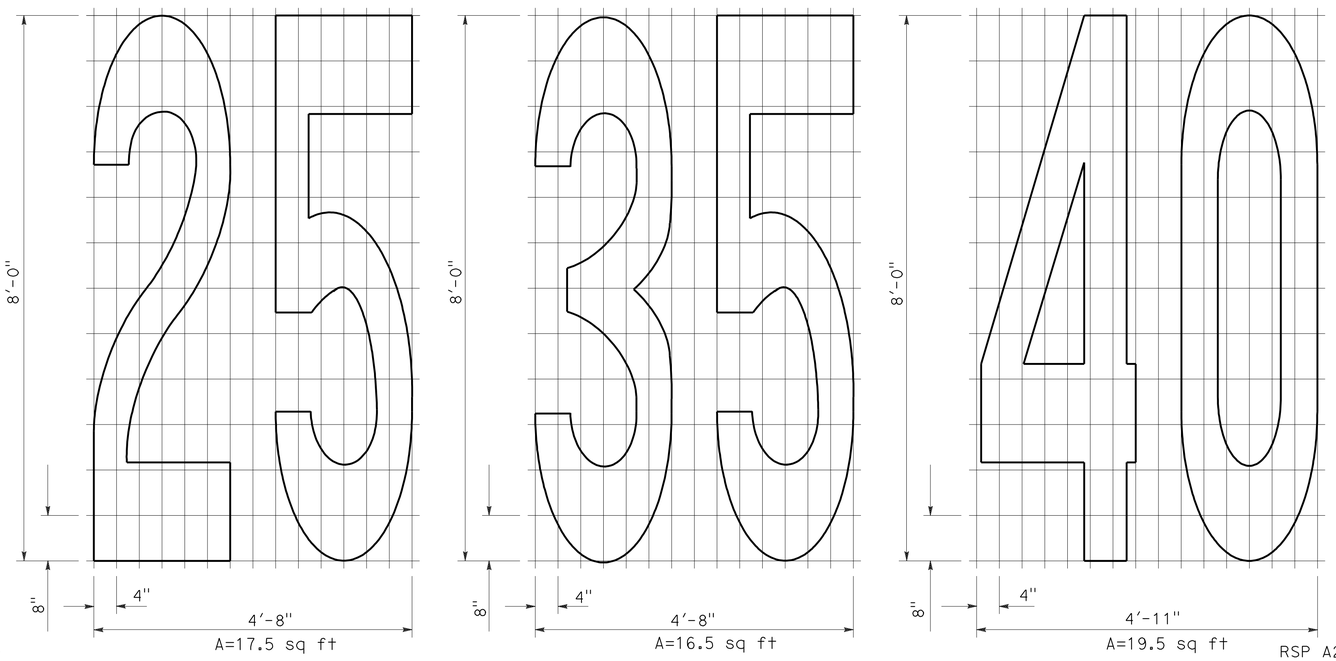

NUMERALS

NOTE:

1. Minor variations in dimensions may be accepted by the Engineer.

STATE OF CALIFORNIA
DEPARTMENT OF TRANSPORTATION

PAVEMENT MARKINGS SYMBOLS AND NUMERALS

NO SCALE

RSP A24C DATED JUNE 6, 2008 SUPERSEDES STANDARD PLAN A24C DATED MAY 1, 2006 - PAGE 11 OF THE STANDARD PLANS BOOK DATED MAY 2006.

REVISED STANDARD PLAN RSP A24C

2006 REVISED STANDARD PLAN RSP A24C

5-27-08

DIST	COUNTY	ROUTE	POST MILES TOTAL PROJECT	SHEET NO.	TOTAL SHEETS
12	Ora	91	R9.2/R15.9	69	86

REGISTERED CIVIL ENGINEER

June 6, 2008
PLANS APPROVAL DATE

REGISTERED PROFESSIONAL ENGINEER Hector David Cordova No. C41957 Exp. 3-31-10 CIVIL STATE OF CALIFORNIA

The State of California or its officers or agents shall not be responsible for the accuracy or completeness of electronic copies of this plan sheet.

To accompany plans dated 7-26-10

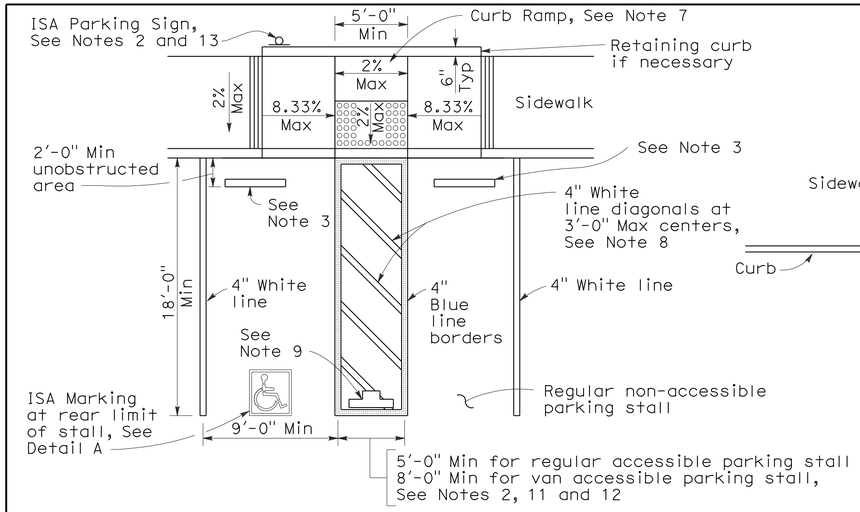

SINGLE PARKING STALL

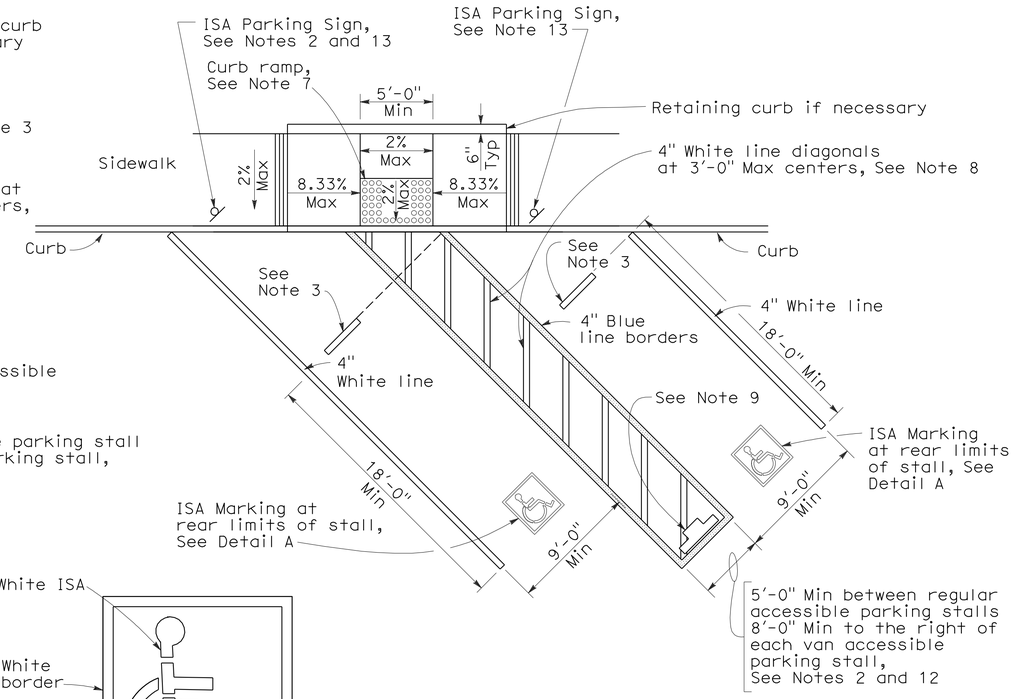

DIAGONAL DOUBLE PARKING STALLS

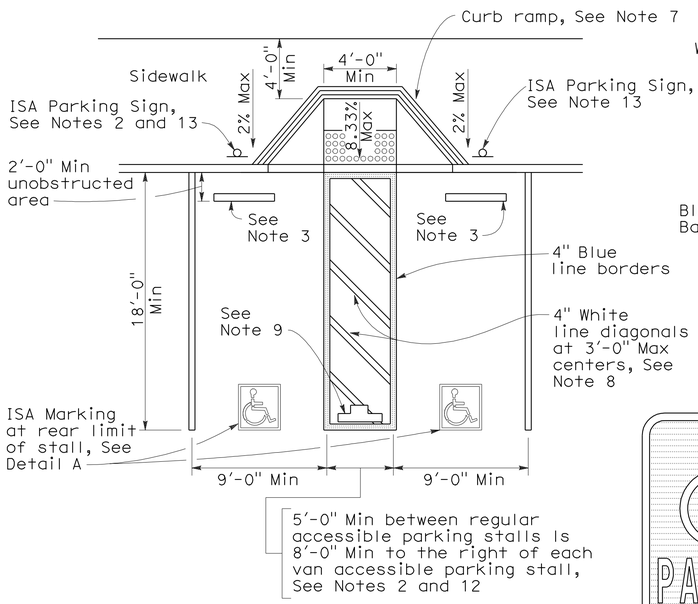

DOUBLE PARKING STALL

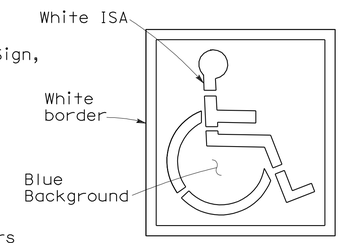

ISA MARKING
See Revised Std Plan RSP A24C

DETAIL A

TABLE A

Total Number of Parking Spaces or Stalls	Minimum Number of Disabled Accessible Parking Spaces or Stalls
1-25	1
26-50	2
51-75	3
76-100	4
101-150	5
151-200	6
201-300	7
301-400	8
401-500	9
501-1000	2 percent of total
Greater than 1001	20 plus 1 for each 100 or fraction thereof over 1001

SIGN R99 (CA)

PLAQUE R99B (CA)

SIGN R99 (CA) with PLAQUE R99B (CA)
See Note 6

SIGN R99C (CA)
See Note 6

UNAUTHORIZED VEHICLES PARKED IN DESIGNATED ACCESSIBLE SPACES NOT DISPLAYING DISTINGUISHING PLACARDS OR SPECIAL LICENSE PLATES ISSUED FOR PERSONS WITH DISABILITIES WILL BE TOWED AWAY AT THE OWNER'S EXPENSE

TOWED VEHICLES MAY BE RECLAIMED AT
(Insert Address)

OR BY TELEPHONING
(Insert Telephone Number)

SIGN R100B (CA)
See Note 10

SIGN R7-8b
See Notes 2 and 6

OFF-STREET PARKING SIGNS
(Parking lot or garage)
See Note 6

ISA = International Symbol of Accessibility

NOTES:

1. Accessible parking spaces serving a particular building shall be located on the shortest accessible route of travel from adjacent parking to an accessible entrance. In parking facilities that do not serve a particular building, accessible parking shall be located on the shortest accessible route of travel to an accessible pedestrian entrance of the parking facility.
2. One in every eight accessible off-street parking stalls, but not less than one, shall be served by an accessible aisle of 8'-0" minimum width and shall be signed van accessible. The R7-8b sign shall be mounted below the R99B (CA) plaque or the R99C (CA) sign.
3. In each parking stall, a curb or bumper shall be provided and located to prevent encroachment of vehicles over the required width of walkways. Parking stalls shall be so located that persons with disabilities are not compelled to wheel or walk behind parked cars other than their own.
4. Surface slopes of accessible off-street parking stalls shall be the minimum possible and shall not exceed 2 percent in any direction.
5. Table A shall be used to determine the required number of accessible parking stalls in each parking lot or garage.
6. Where Plaque R99B (CA), Sign R99C (CA) or Sign R7-8b are installed, the bottom of the sign or plaque panel shall be a minimum of 7'-0" above the surrounding surface.
7. Curb ramps shall conform to the details shown on Revised Standard Plan RSP A88A.
8. Blue paint, instead of white may be used for marking accessibility aisles in areas where snow may cause white markings to not be visible.
9. The words "NO PARKING", shall be painted in white letters no less than 1'-0" high and located so that it is visible to traffic enforcement officials. See Revised Standard Plan RSP A90B for details of the "NO PARKING" pavement marking.
10. A R100B (CA) sign shall be posted in a conspicuous place at each entrance to off-street parking facilities or immediately adjacent to and visible from each stall. The sign shall include the address where the towed vehicle may be reclaimed and the telephone number of the local traffic law enforcement agency.
11. Where a single (non-van) accessible parking space is provided, the loading and unloading access aisle shall be on the passenger side of the vehicle as the vehicle is going forward into the parking space.
12. Where a van accessible parking space is provided, the loading and unloading access aisle shall be 8'-0" wide minimum, and shall be on the passenger side of the vehicle as the vehicle is going forward into the parking space.
13. Accessible Parking Only Sign shall be Sign R99C (CA) or Sign R99 (CA) with Plaque R99B (CA).

STATE OF CALIFORNIA
DEPARTMENT OF TRANSPORTATION

ACCESSIBLE PARKING OFF-STREET

NO SCALE

RSP A90A DATED JUNE 6, 2008 SUPERSEDES STANDARD PLAN A90A
DATED MAY 1, 2006 - PAGE 117 OF THE STANDARD PLANS BOOK DATED MAY 2006.

REVISED STANDARD PLAN RSP A90A

2006 REVISED STANDARD PLAN RSP A90A

6-3-08

DIST	COUNTY	ROUTE	POST MILES TOTAL PROJECT	SHEET NO.	TOTAL SHEETS
12	Ora	91	R9.2/R15.9	70	86

REGISTERED CIVIL ENGINEER

June 6, 2008
PLANS APPROVAL DATE

REGISTERED PROFESSIONAL ENGINEER
Hector David Cordova
No. C41957
Exp. 3-31-10
CIVIL
STATE OF CALIFORNIA

The State of California or its officers or agents shall not be responsible for the accuracy or completeness of electronic copies of this plan sheet.

To accompany plans dated 7-26-10

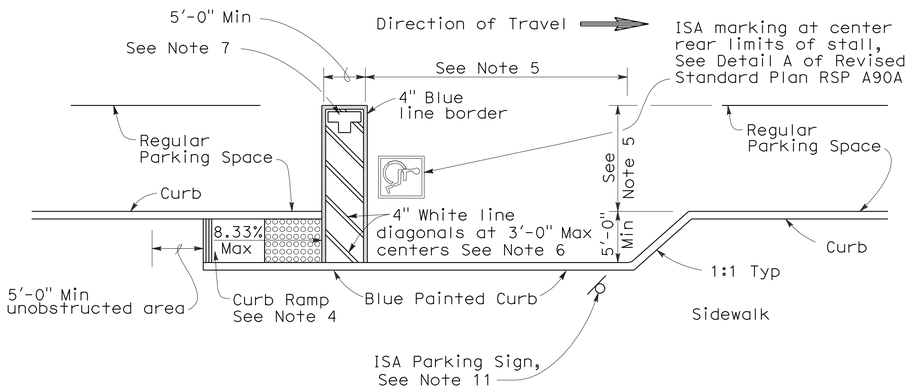

CONVENTIONAL

(See Note 9)

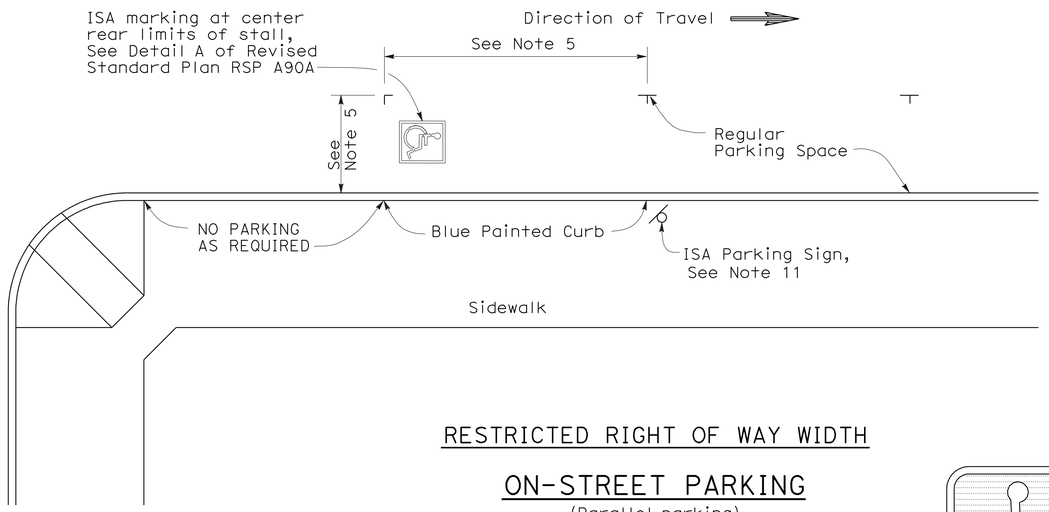

RESTRICTED RIGHT OF WAY WIDTH

ON-STREET PARKING

(Parallel parking)
(See Note 10)

PAVEMENT MARKING

See Note 7

SIGN R99 (CA)

SIGN R99C (CA)
See Note 3

PLAQUE R99B (CA)

SIGN R99 (CA) with PLAQUE R99B (CA)
See Note 3

ISA = International Symbol of Accessibility

NOTES:

1. Parking spaces shall be so located that persons with disabilities are not compelled to wheel or walk behind parked cars other than their own.
2. Surface slopes of accessible on-street parking spaces shall be the minimum feasible.
3. Where Plaque R99B (CA) or Sign R99C (CA) are installed, the bottom of the sign or plaque panel shall be a minimum of 7'-0" above the surrounding surface.
4. Curb ramps shall conform to the details shown on Revised Standard Plan RSP A88A.
5. Accessible on-street parking spaces shall not be smaller in length or width than that specified by the local jurisdiction for other parking spaces, but not less than 20'-0" in length and not less than 8'-0" in width.
6. Blue paint, instead of white may be used for marking accessibility aisles in areas where snow may cause white markings to not be visible.
7. The words "NO PARKING", shall be painted in white letters no less than 1'-0" high on a contrasting background and located so that it is visible to traffic enforcement officials. See Standard Plan A24E for square foot area for painting the words "NO PARKING".
8. There shall be no obstructions on the sidewalk adjacent to and for the full length of the parking space, except for the ISA parking sign shown.
9. The Conventional detail should be the primary choice of accessible on-street parking. However, if the sidewalk lacks adequate space to construct a standard curb ramp, the Restricted Right of Way detail should be used.
10. If the Restricted Right of Way width detail is selected and it conflicts with a bus stop or other uses, this detail may apply to the other end of the block.
11. Accessible Parking Only Sign shall be Sign R99C (CA) or Sign R99 (CA) with Plaque R99B (CA).

STATE OF CALIFORNIA
DEPARTMENT OF TRANSPORTATION

ACCESSIBLE PARKING ON-STREET

NO SCALE

RSP A90B DATED JUNE 6, 2008 SUPERSEDES STANDARD PLAN A90B
DATED MAY 1, 2006 - PAGE 118 OF THE STANDARD PLANS BOOK DATED MAY 2006.

REVISED STANDARD PLAN RSP A90B

2006 REVISED STANDARD PLAN RSP A90B

6-3-08

DIST	COUNTY	ROUTE	POST MILES TOTAL PROJECT	SHEET NO.	TOTAL SHEETS
12	Ora	91	R9.2/R15.9	71	86

Randell D. Hiatt
REGISTERED CIVIL ENGINEER

June 6, 2008
PLANS APPROVAL DATE

REGISTERED PROFESSIONAL ENGINEER
Randell D. Hiatt
No. C50200
Exp. 6-30-09
CIVIL
STATE OF CALIFORNIA

The State of California or its officers or agents shall not be responsible for the accuracy or completeness of electronic copies of this plan sheet.

To accompany plans dated 7-26-10

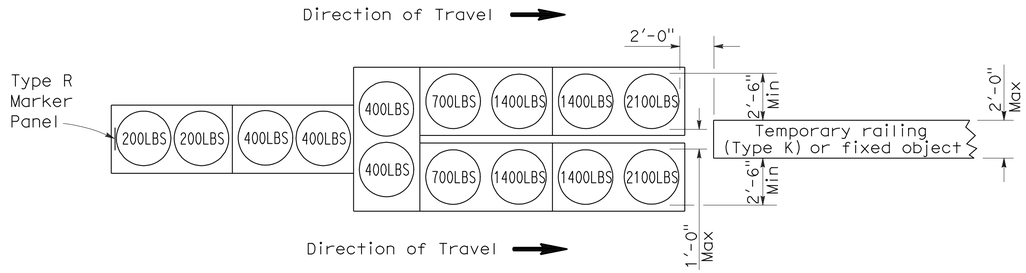

ARRAY `TU14'

Approach speed 45 mph or more

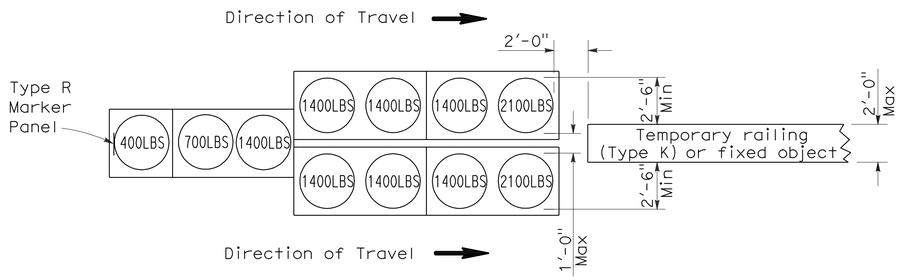

ARRAY `TU11'

Approach speed less than 45 mph

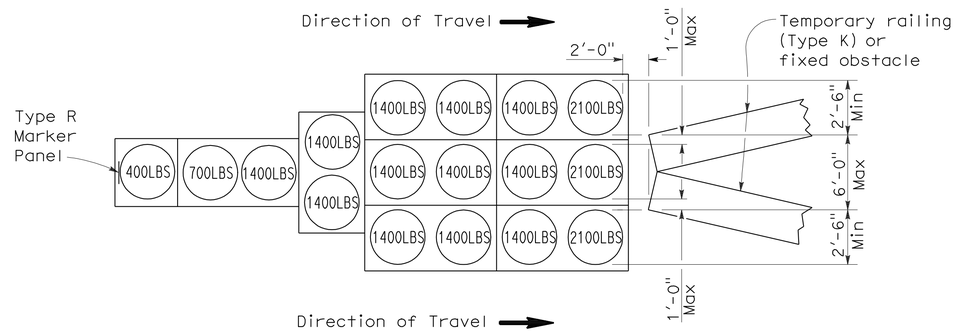

ARRAY `TU17'

Approach speed less than 45 mph

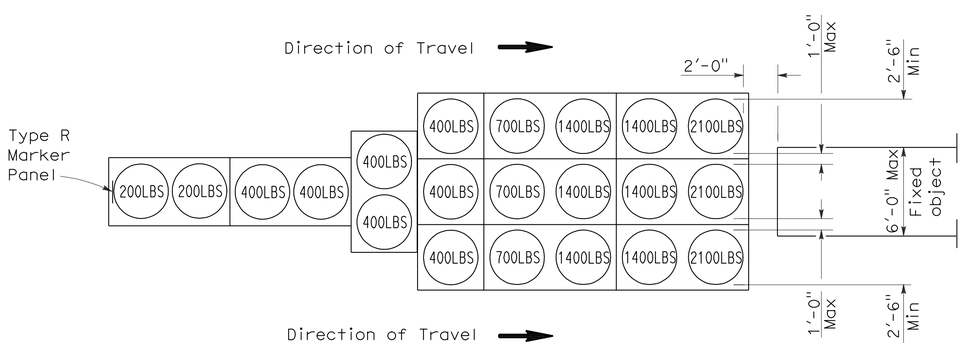

ARRAY `TU21'

Approach speed 45 mph or more

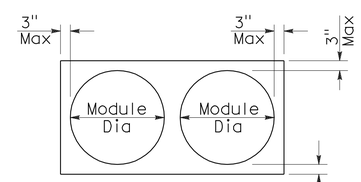

PLAN

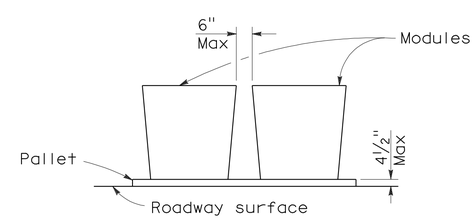

ELEVATION

CRASH CUSHION PALLET DETAIL

See Note 7

NOTES:

1. (XXX) Indicates sand filled module location and weight of sand in pounds for each module. Module spacing is based on the greater diameter of the module.
2. All sand weights are nominal.
3. Temporary crash cushion arrays shall not encroach on the traveled way.
4. Place the top of Type R marker panel 1" below the module lid.
5. Refer to Standard Plan A73B for marker details.
6. Approach speeds indicated conform to NCHRP 350 Report criteria.
7. Use of pallets is optional.

STATE OF CALIFORNIA
DEPARTMENT OF TRANSPORTATION

TEMPORARY CRASH CUSHION, SAND FILLED (UNIDIRECTIONAL)

NO SCALE

RSP T1A DATED JUNE 6, 2008 SUPERSEDES STANDARD PLAN T1A
DATED MAY 1, 2006 - PAGE 211 OF THE STANDARD PLANS BOOK DATED MAY 2006.

REVISED STANDARD PLAN RSP T1A

2006 REVISED STANDARD PLAN RSP T1A

DIST	COUNTY	ROUTE	POST MILES TOTAL PROJECT	SHEET NO.	TOTAL SHEETS
12	Ora	91	R9.2/R15.9	72	86

Randell D. Hiatt
REGISTERED CIVIL ENGINEER

June 6, 2008
PLANS APPROVAL DATE

REGISTERED PROFESSIONAL ENGINEER
Randell D. Hiatt
No. C50200
Exp. 6-30-09
CIVIL
STATE OF CALIFORNIA

The State of California or its officers or agents shall not be responsible for the accuracy or completeness of electronic copies of this plan sheet.

To accompany plans dated 7-26-10

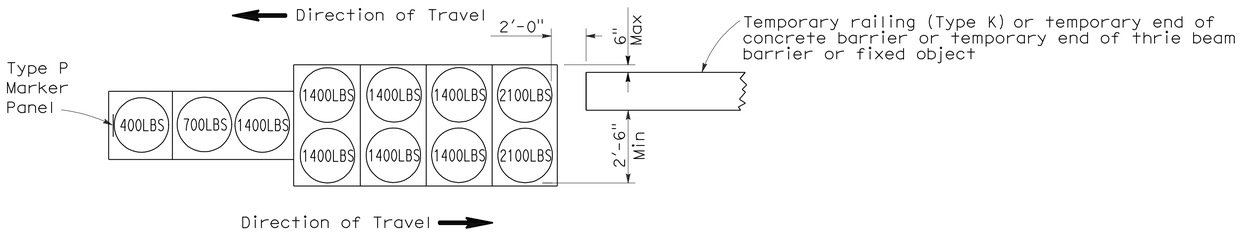

ARRAY 'TB11'

Approach speed less than 45 mph

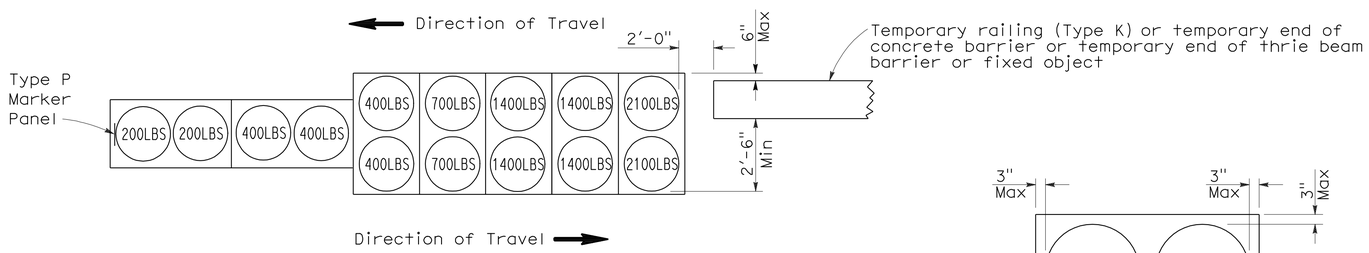

ARRAY 'TB14'

Approach speed 45 mph or more

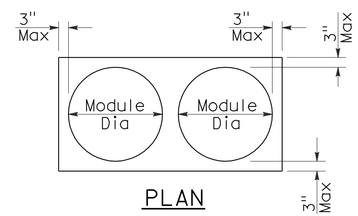

PLAN

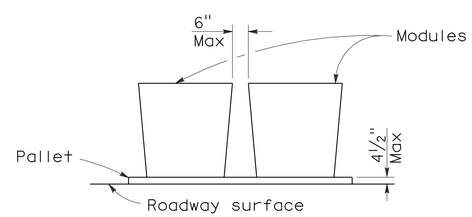

ELEVATION

CRASH CUSHION PALLET DETAIL

See Note 7

NOTES:

1. (XXX) Indicates sand filled module location and weight of sand in pounds for each module. Module spacing is based on the greater diameter of the module.
2. All sand weights are nominal.
3. Temporary crash cushion arrays shall not encroach on the traveled way.
4. Place the Type P marker panel so that the bottom of the panel rests upon the pallet.
5. Refer to Standard Plan A73B for marker details.
6. Approach speeds indicated conform to NCHRP 350 Report criteria.
7. Use of pallets is optional.

STATE OF CALIFORNIA
DEPARTMENT OF TRANSPORTATION

TEMPORARY CRASH CUSHION, SAND FILLED (BIDIRECTIONAL)

NO SCALE

RSP T1B DATED JUNE 6, 2008 SUPERSEDES STANDARD PLAN T1B
DATED MAY 1, 2006 - PAGE 212 OF THE STANDARD PLANS BOOK DATED MAY 2006.

REVISED STANDARD PLAN RSP T1B

2006 REVISED STANDARD PLAN RSP T1B

5-15-08

DIST	COUNTY	ROUTE	POST MILES TOTAL PROJECT	SHEET NO.	TOTAL SHEETS
12	Ora	91	R9.2/R15.9	73	86

Randell D. Hiatt
REGISTERED CIVIL ENGINEER

June 6, 2008
PLANS APPROVAL DATE

REGISTERED PROFESSIONAL ENGINEER
Randell D. Hiatt
No. C50200
Exp. 6-30-09
CIVIL
STATE OF CALIFORNIA

The State of California or its officers or agents shall not be responsible for the accuracy or completeness of electronic copies of this plan sheet.

To accompany plans dated 7-26-10

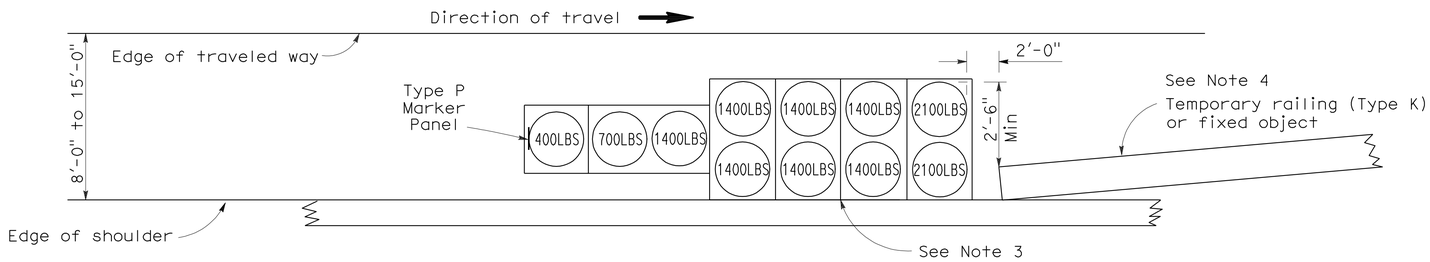

ARRAY 'TS11'

Approach speed less than 45 mph
See Note 9

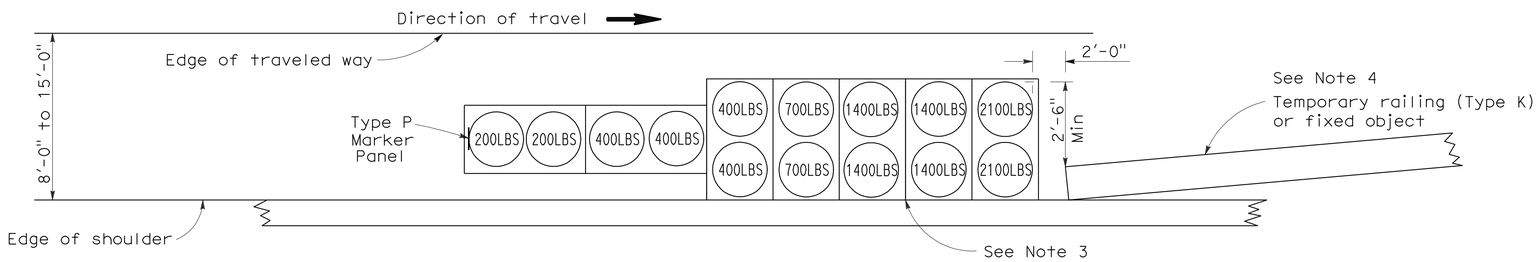

ARRAY 'TS14'

Approach speed 45 mph or more
See Note 9

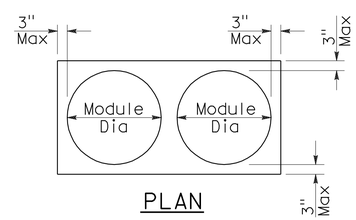

PLAN

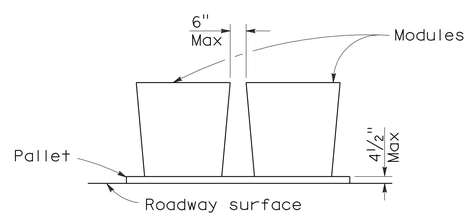

ELEVATION

CRASH CUSHION PALLET DETAIL

See Note 11

NOTES:

1. (XXX) Indicates sand filled module location and weight of sand in pounds for each module. Module spacing is based on the greater diameter of the module.
2. All sand weights are nominal.
3. The temporary crash cushion arrays shown on this plan shall be used only in locations where there will be traffic on one side of the temporary crash cushion array.
4. If the fixed object or approach end of the temporary railing is less than 15'-0" from the edge of traveled way, a temporary crash cushion is required in a construction or work zone.
5. Temporary crash cushion arrays shall not encroach on the traveled way.
6. Arrays for median shoulders shall conform to details shown on this plan for outside shoulders.
7. Place the Type P marker panel so that the bottom of the panel rests upon the pallet and faces traffic.
8. Refer to Standard Plan A73B for marker details.
9. For shoulder widths less than 8'-0", appropriate approved crash cushion protection, other than sand filled modules, shall be provided at fixed objects and at approach ends of temporary railing. The specific type of crash cushion shall be as shown on the project plans or as specified in the Special Provisions, or if not shown on the project plans or specified in the Special Provisions, shall be as approved by the Engineer.
10. Approach speeds indicated conform to NCHRP 350 Report criteria.
11. Use of pallets is optional.

STATE OF CALIFORNIA
DEPARTMENT OF TRANSPORTATION

TEMPORARY CRASH CUSHION, SAND FILLED (SHOULDER INSTALLATIONS)

NO SCALE

RSP T2 DATED JUNE 6, 2008 SUPERSEDES STANDARD PLAN T2
DATED MAY 1, 2006 - PAGE 213 OF THE STANDARD PLANS BOOK DATED MAY 2006.

REVISED STANDARD PLAN RSP T2

2006 REVISED STANDARD PLAN RSP T2

5-15-08

DIST	COUNTY	ROUTE	POST MILES TOTAL PROJECT	SHEET NO.	TOTAL SHEETS
12	Ora	91	R9.2/R15.9	74	86

REGISTERED CIVIL ENGINEER

November 17, 2006
PLANS APPROVAL DATE

REGISTERED PROFESSIONAL ENGINEER
Greg W. Edwards
No. C36386
Exp. 6-30-08
CIVIL
STATE OF CALIFORNIA

The State of California or its officers or agents shall not be responsible for the accuracy or completeness of electronic copies of this plan sheet.

To accompany plans dated 7-26-10

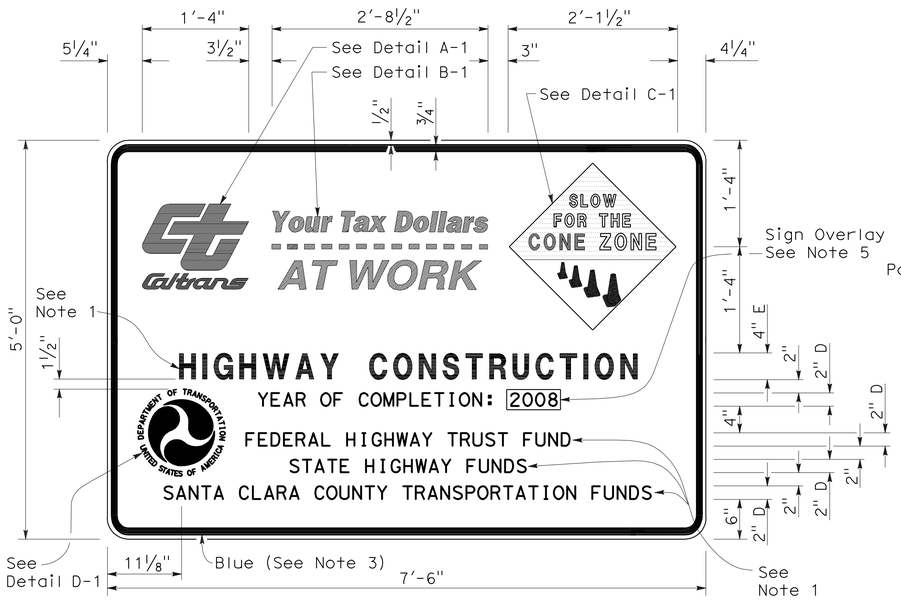

TYPE 1

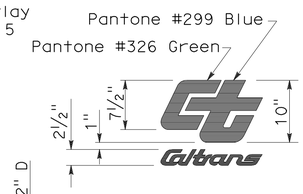

DETAIL A-1

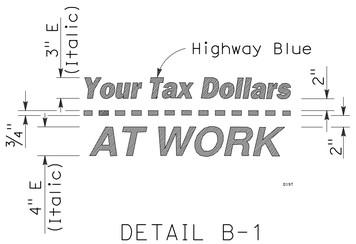

DETAIL B-1
(See Note 3)

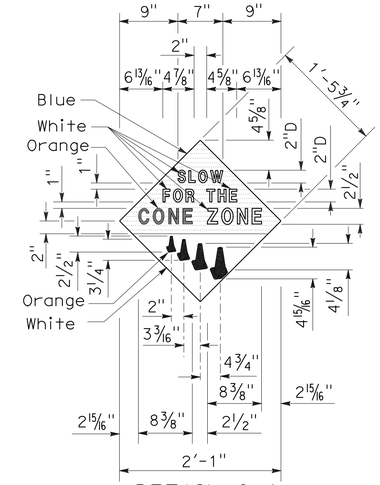

DETAIL C-1
(See Note 4)

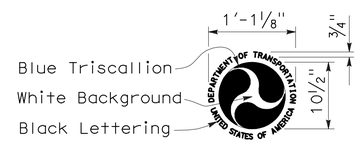

DETAIL D-1
(See Note 6)

NOTES:

1. The sign messages shown for type of project and fund types are examples only. See the Special Provisions for the applicable type of project and fund type messages to be used.
2. Except as otherwise shown, the legend of sign shall be black on a white background (non-reflective).
3. The border of the signs and details "B-1" and "B-2" shall be blue (non-reflective).
4. The diamond in details "C-1" and "C-2" shall be blue for the background of message, " SLOW FOR THE CONE ZONE", and white background for the orange cones. The color and type of font for the "SLOW FOR THE CONE ZONE" message shall be: "SLOW" white D; "FOR THE" white D; "CONE" orange Arial font; "ZONE" white Arial font.
5. Year of completion of project construction shown on the overlay is an example only. See the Special Provisions.
6. Use when the Project involves Federal Highway Trust Fund.

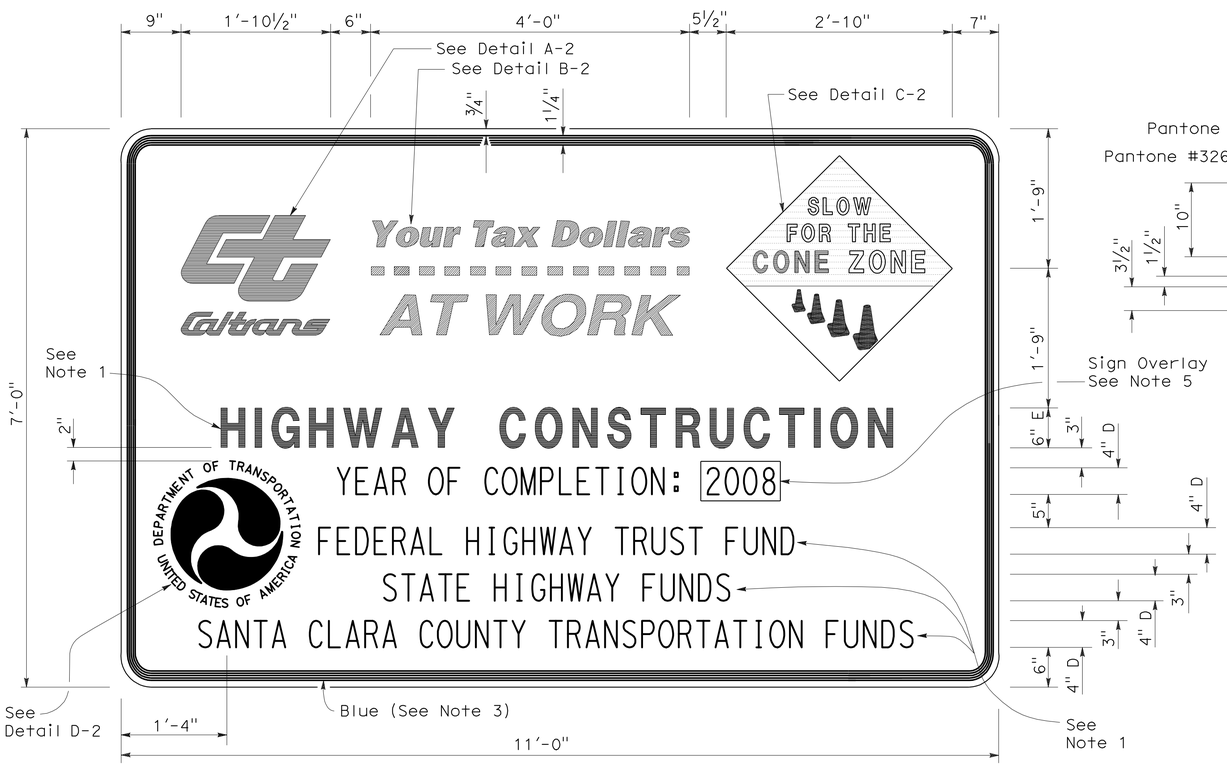

TYPE 2

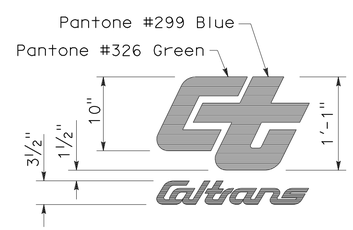

DETAIL A-2

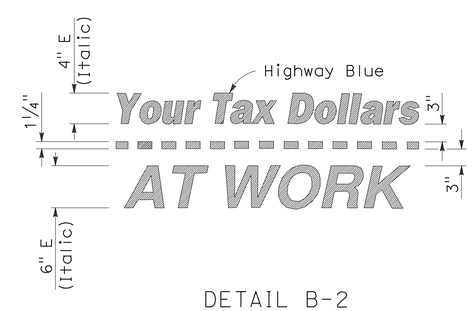

DETAIL B-2
(See Note 3)

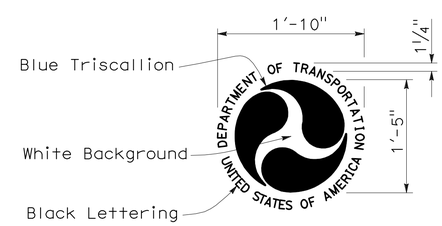

DETAIL D-2
(See Note 6)

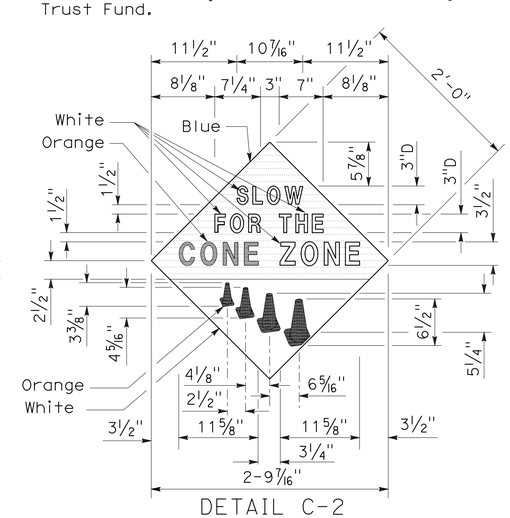

DETAIL C-2
(See Note 4)

STATE OF CALIFORNIA
DEPARTMENT OF TRANSPORTATION

CONSTRUCTION PROJECT FUNDING IDENTIFICATION SIGNS

NO SCALE

RSP T7 DATED NOVEMBER 17, 2006 SUPERSEDES STANDARD PLAN T7
DATED MAY 1, 2006 - PAGE 217 OF THE STANDARD PLANS BOOK DATED MAY 2006.

REVISED STANDARD PLAN RSP T7

2006 REVISED STANDARD PLAN RSP T7

9-7-06

DIST	COUNTY	ROUTE	POST MILES TOTAL PROJECT	SHEET NO.	TOTAL SHEETS
12	Ora	91	R9.2/R15.9	75	86

LICENSED LANDSCAPE ARCHITECT

August 15, 2008
PLANS Approval DATE

The State of California or its officers or agents shall not be responsible for the accuracy or completeness of electronic copies of this plan sheet.

LICENSED LANDSCAPE ARCHITECT
Robert B. Schott 3889
Signature 11-04-08 Renewal Date
08-11-08 Date
STATE OF CALIFORNIA

To accompany plans dated 7-26-10

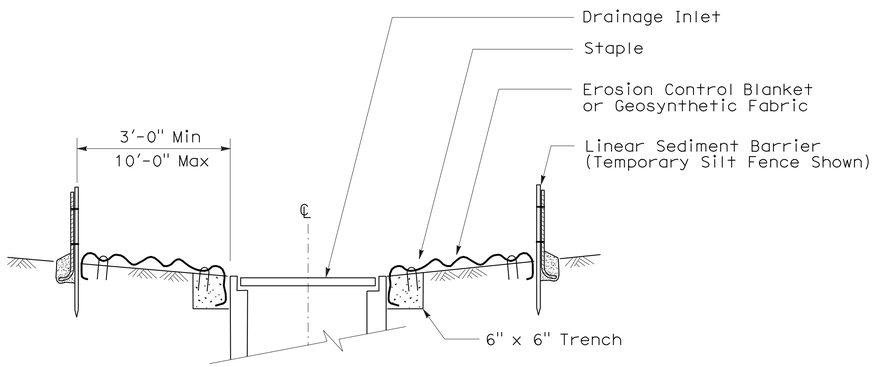

SECTION A-A

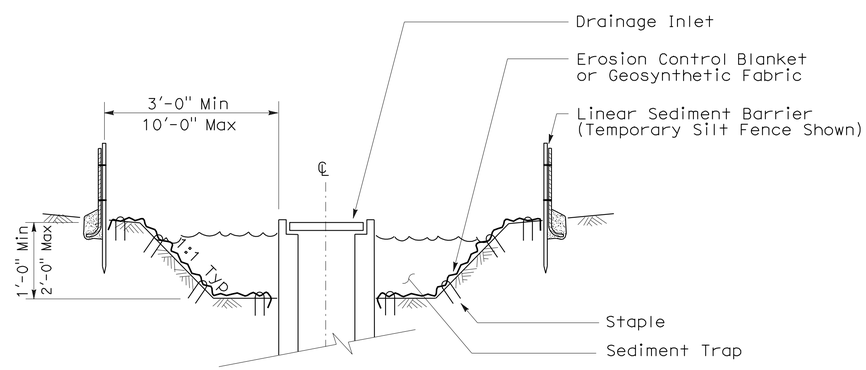

SECTION B-B

NOTES:

1. See Standard Plan T51 for Temporary Silt Fence.
2. Dimensions may vary to fit field conditions.

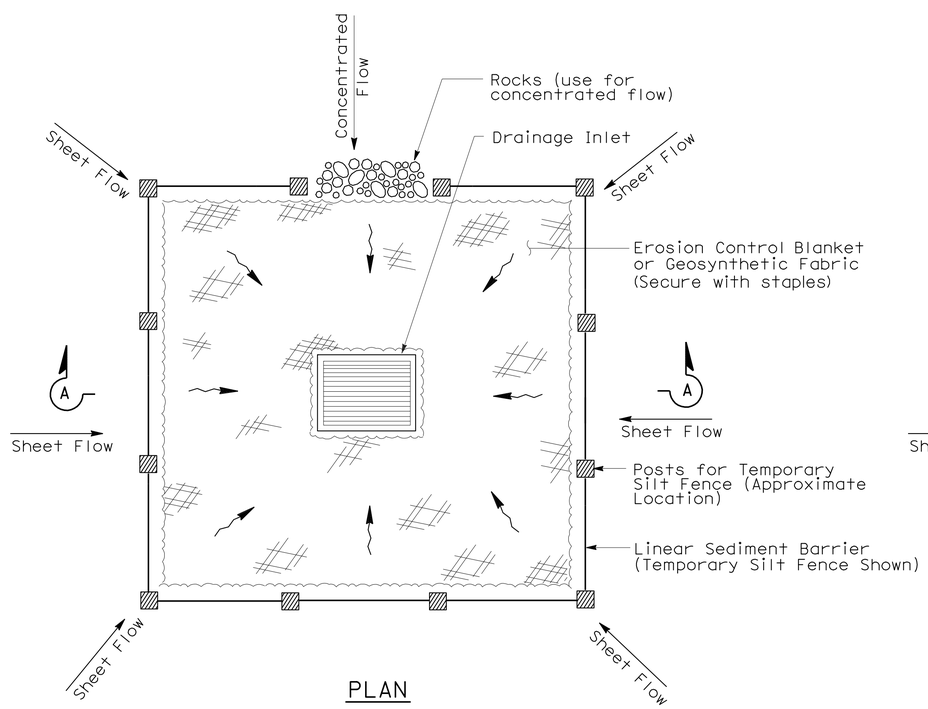

PLAN

TEMPORARY DRAINAGE INLET PROTECTION (TYPE 1)

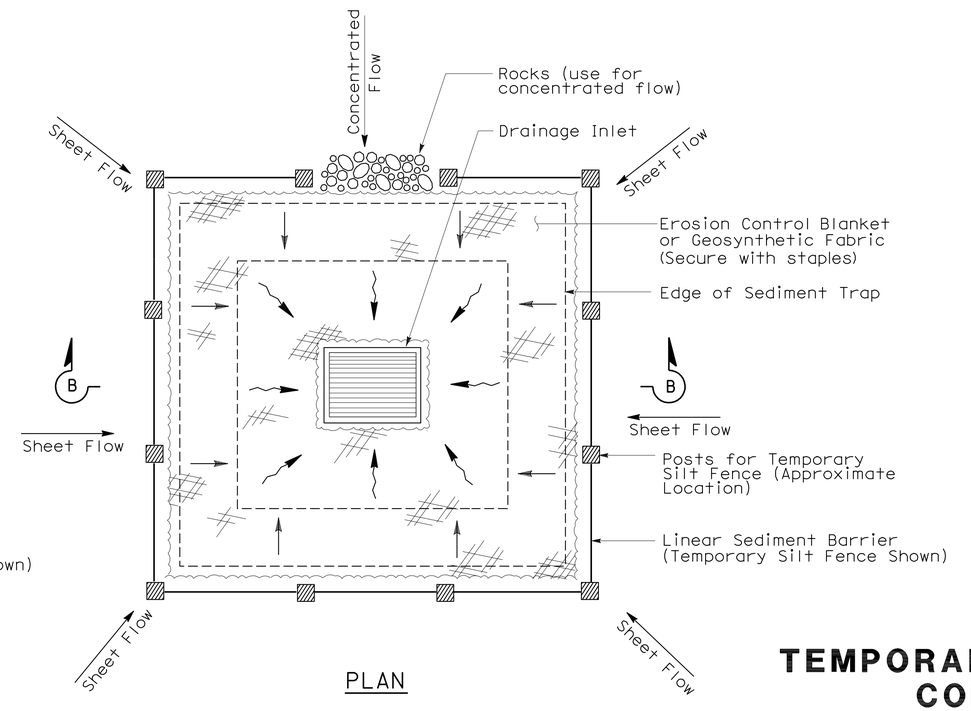

PLAN

TEMPORARY DRAINAGE INLET PROTECTION (TYPE 2) (EXCAVATED SEDIMENT TRAP)

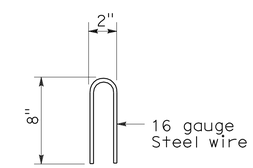

STAPLE DETAIL

STATE OF CALIFORNIA
DEPARTMENT OF TRANSPORTATION

TEMPORARY WATER POLLUTION CONTROL DETAILS (TEMPORARY DRAINAGE INLET PROTECTION)

NO SCALE

NSP T61 DATED AUGUST 15, 2008 SUPPLEMENTS THE STANDARD PLANS BOOK DATED MAY 2006.

NEW STANDARD PLAN NSP T61

2006 NEW STANDARD PLAN NSP T61

7-11-08

DIST	COUNTY	ROUTE	POST MILES TOTAL PROJECT	SHEET NO.	TOTAL SHEETS
12	Ora	91	R9.2/R15.9	76	86

LICENSED LANDSCAPE ARCHITECT

August 15, 2008
PLANS APPROVAL DATE

LICENSED LANDSCAPE ARCHITECT Robert B. Schott 3625 Signature 11-04-08 Renewal Date 08-11-08 Date STATE OF CALIFORNIA

The State of California or its officers or agents shall not be responsible for the accuracy or completeness of electronic copies of this plan sheet.

To accompany plans dated 7-26-10

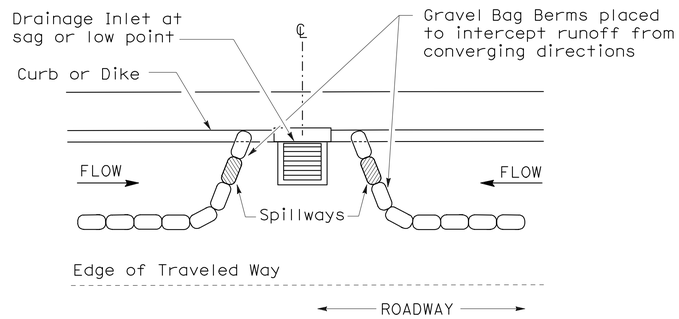

PLAN

CONFIGURATION FOR SAG POINT INLET (GRAVEL BAG BERM)

GRAVEL BAG BERM (TYPE 3A) SPACING TABLE

SLOPE OF ROADWAY (PERCENT)	1 to 3.9	4 to 5.9	6 to 7.9	8 to 10	10+
INTERVAL BETWEEN BERM	100′	75′	50′	25′	12′

For slope of less than 1%, install barriers only if erosion/sediment is prevalent

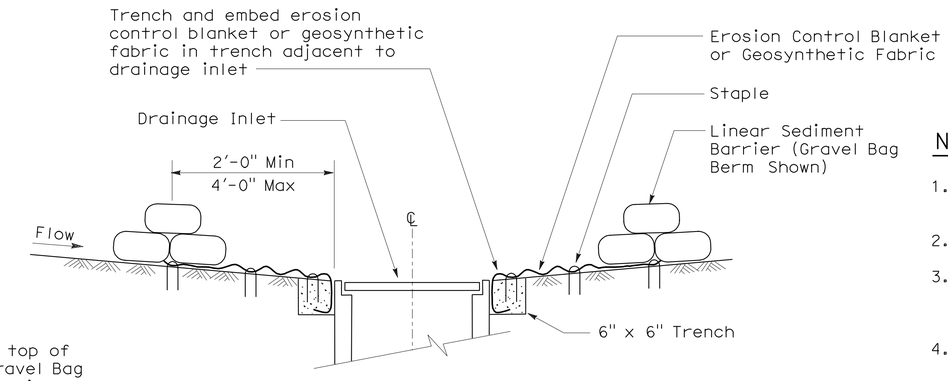

SECTION A-A

NOTES:

1. Place safety cones adjacent to drainage inlet protection.
2. Dimensions may vary to fit field conditions.
3. Install a minimum of 3 gravel bag berms upstream of each drainage inlet to be protected.
4. Position erosion control blanket or geosynthetic fabric at edge of concrete apron and secure in trench.
5. Erosion control blanket or geosynthetic fabric is not required if the area adjacent to the drainage inlet is vegetated or paved.

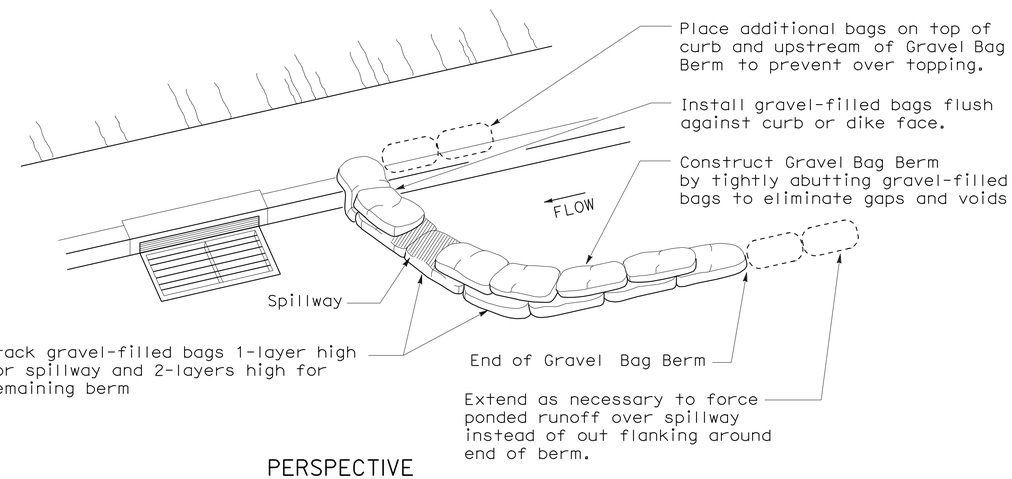

PERSPECTIVE

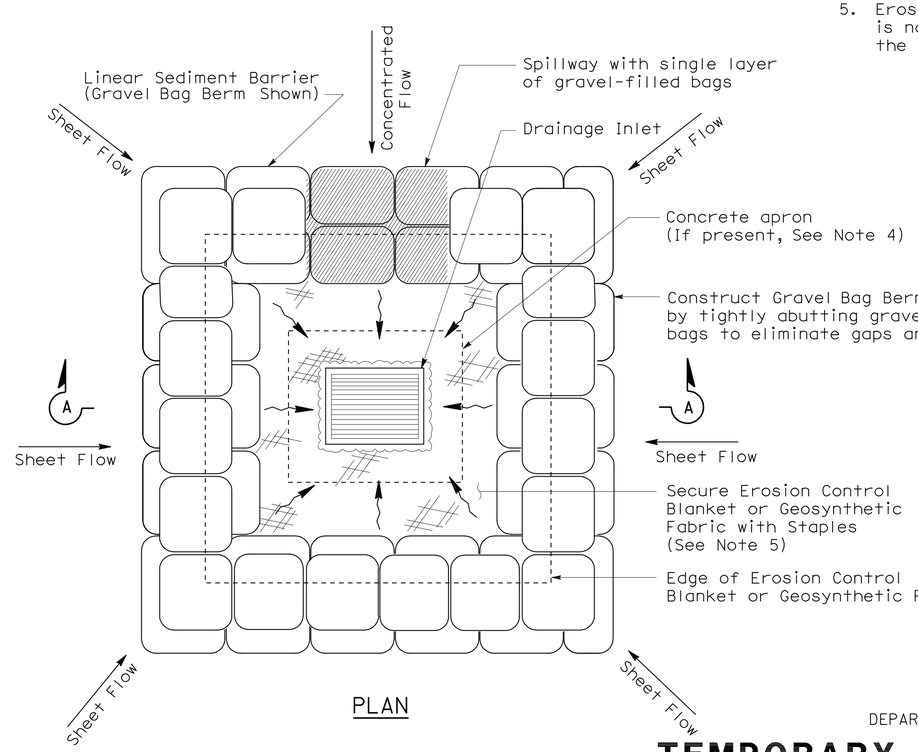

PLAN

TEMPORARY DRAINAGE INLET PROTECTION (TYPE 3B)

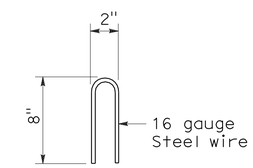

STAPLE DETAIL

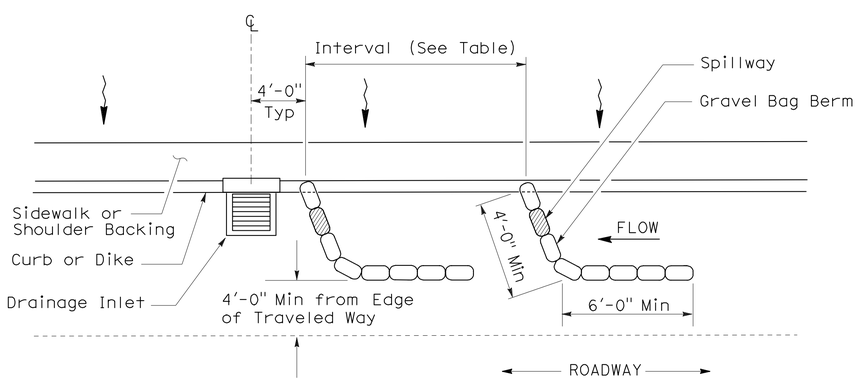

PLAN

TEMPORARY DRAINAGE INLET PROTECTION (TYPE 3A) (GRAVEL BAG BERM)

STATE OF CALIFORNIA
DEPARTMENT OF TRANSPORTATION

TEMPORARY WATER POLLUTION CONTROL DETAILS (TEMPORARY DRAINAGE INLET PROTECTION)

NO SCALE

NSP T62 DATED AUGUST 15, 2008 SUPPLEMENTS THE STANDARD PLANS BOOK DATED MAY 2006.

NEW STANDARD PLAN NSP T62

2006 NEW STANDARD PLAN NSP T62

7-11-08

DIST	COUNTY	ROUTE	POST MILES TOTAL PROJECT	SHEET NO.	TOTAL SHEETS
12	Ora	91	R9.2/R15.9	77	86

Robert B Schott
LICENSED LANDSCAPE ARCHITECT

August 15, 2008
PLANS APPROVAL DATE

LICENSED LANDSCAPE ARCHITECT Robert B. Schott 3895 Signature 11-04-08 Renewal Date 08-11-08 Date STATE OF CALIFORNIA

The State of California or its officers or agents shall not be responsible for the accuracy or completeness of electronic copies of this plan sheet.

To accompany plans dated 7-26-10

FLEXIBLE SEDIMENT BARRIER SPACING TABLE

SLOPE OF ROADWAY (PERCENT)	0 to 0.9	1 to 1.9	2 to 2.9	3 to 4	5+
INTERVAL BETWEEN BARRIERS	50′	35′	30′	25′	20′
ANGLE FROM FACE OF CURB	70°	70°	70°	45°	45°
SUGGESTED BARRIER LENGTH	6′	6′	6′	6′	6′

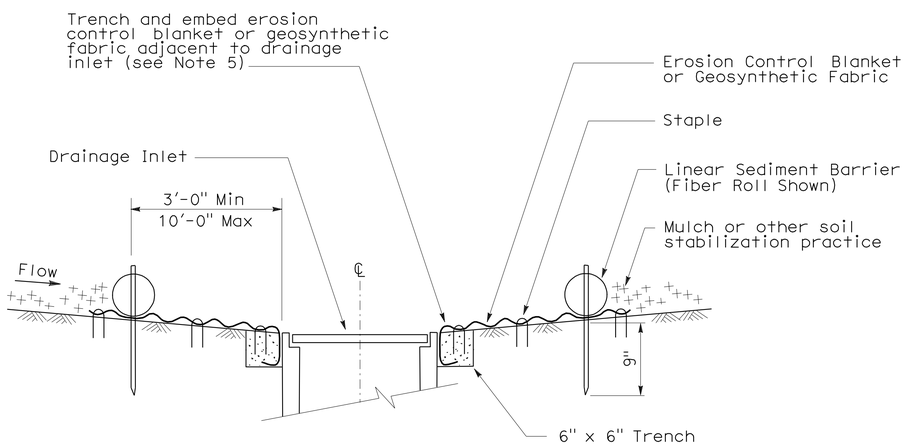

SECTION A-A

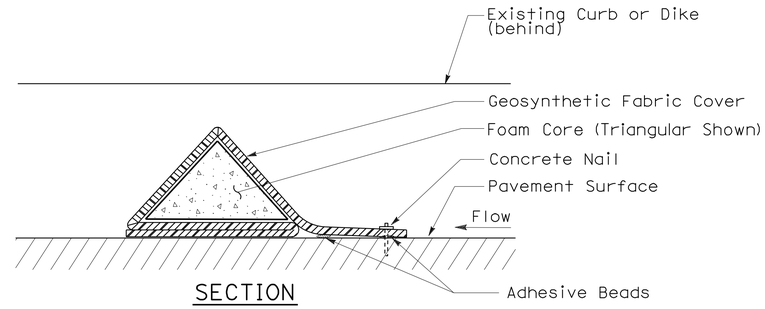

SECTION

FLEXIBLE SEDIMENT BARRIER DETAIL (FOAM BARRIER SHOWN)

NOTES:

1. See Standard Plan T51 for Temporary Silt Fence.
2. Dimensions may vary to fit field conditions.
3. Install a minimum of 3 flexible sediment barriers upstream of each drainage inlet to be protected.
4. Position erosion control blanket or geosynthetic fabric at edge of concrete apron and secure in trench.
5. Erosion control blanket or geosynthetic fabric is not required if the area adjacent to the drainage inlet is vegetated.

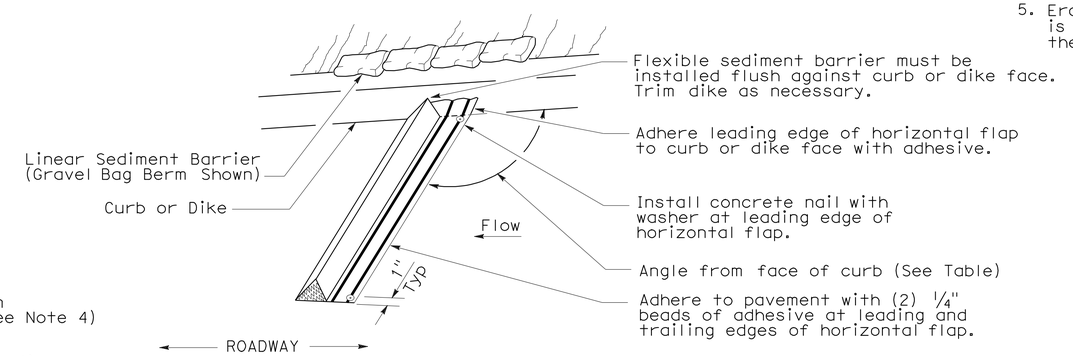

PERSPECTIVE

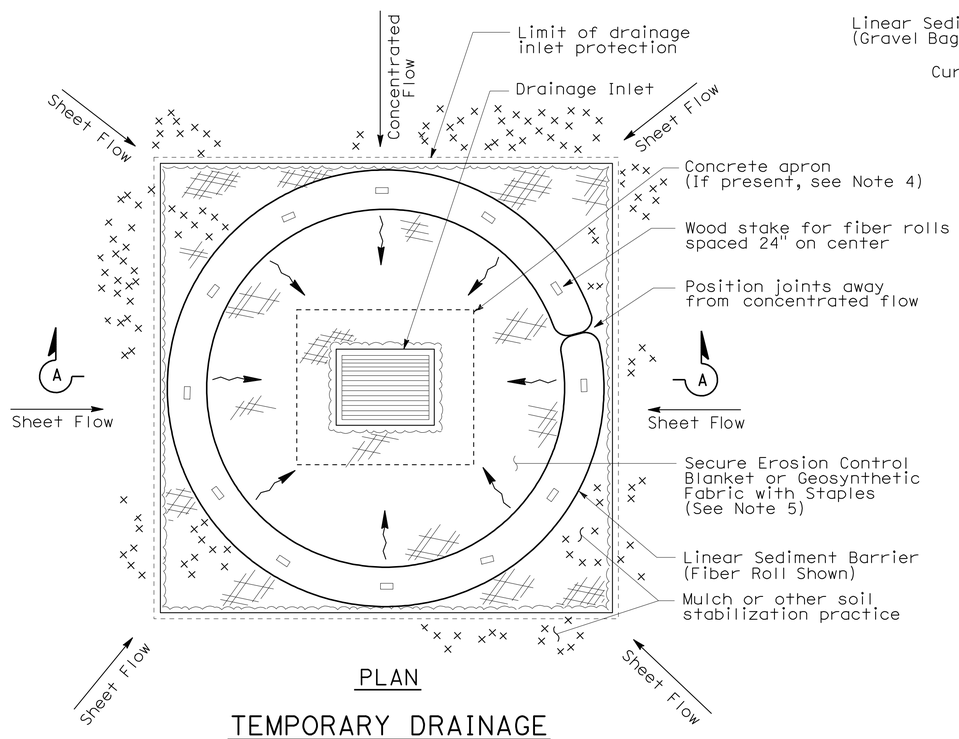

PLAN

TEMPORARY DRAINAGE INLET PROTECTION (TYPE 4A)

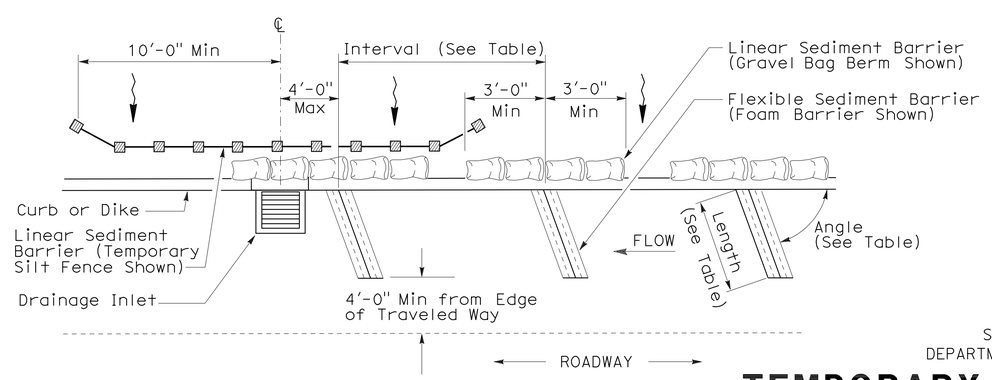

PLAN

TEMPORARY DRAINAGE INLET PROTECTION (TYPE 4B) FLEXIBLE SEDIMENT BARRIER

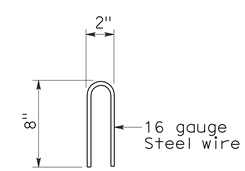

STAPLE DETAIL

STATE OF CALIFORNIA
DEPARTMENT OF TRANSPORTATION

TEMPORARY WATER POLLUTION CONTROL DETAILS (TEMPORARY DRAINAGE INLET PROTECTION)

NO SCALE

NSP T63 DATED AUGUST 15, 2008 SUPPLEMENTS THE STANDARD PLANS BOOK DATED MAY 2006.

NEW STANDARD PLAN NSP T63

2006 NEW STANDARD PLAN NSP T63

7-11-08

DIST	COUNTY	ROUTE	POST MILES TOTAL PROJECT	SHEET NO.	TOTAL SHEETS
12	Ora	91	R9.2/R15.9	78	86

LICENSED LANDSCAPE ARCHITECT

August 15, 2008
PLANS APPROVAL DATE

LICENSED LANDSCAPE ARCHITECT
Robert B. Schott 3025
Signature 11-04-08
Renewal Date 08-11-08
Date
STATE OF CALIFORNIA

The State of California or its officers or agents shall not be responsible for the accuracy or completeness of electronic copies of this plan sheet.

To accompany plans dated 7-26-10

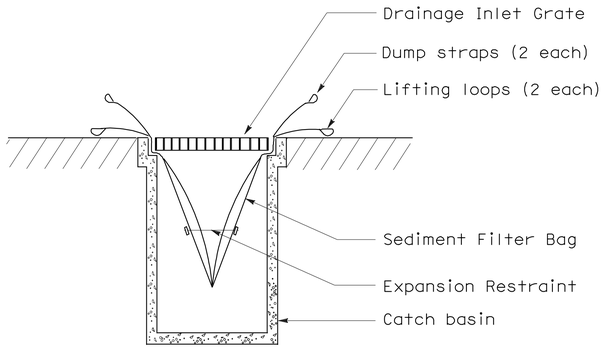

SECTION B-B

SEDIMENT FILTER BAG DETAIL

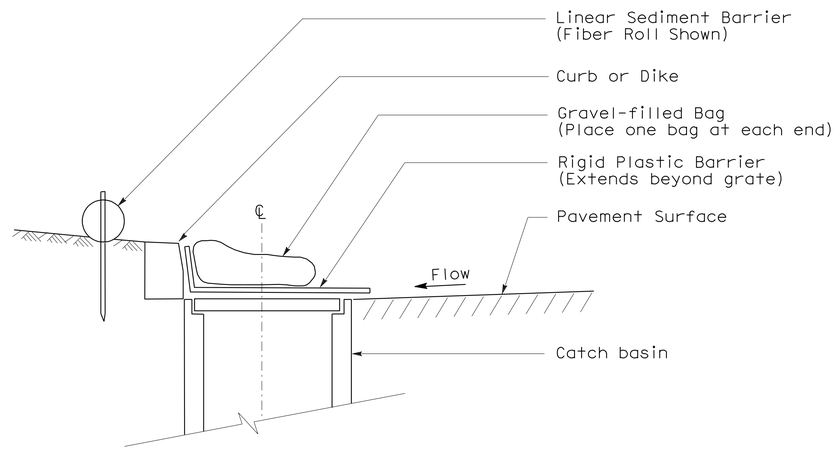

SECTION

TEMPORARY DRAINAGE INLET PROTECTION (TYPE 6A) (CATCH BASIN WITH GRATE)

NOTES:

1. See Standard Plan T51 for Temporary Silt Fence.
2. Dimensions may vary to fit field conditions.

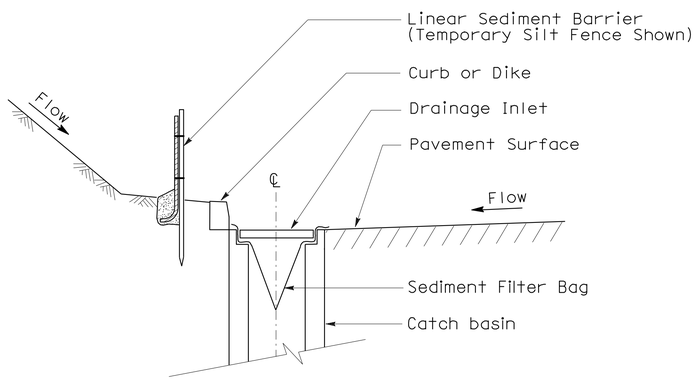

SECTION A-A

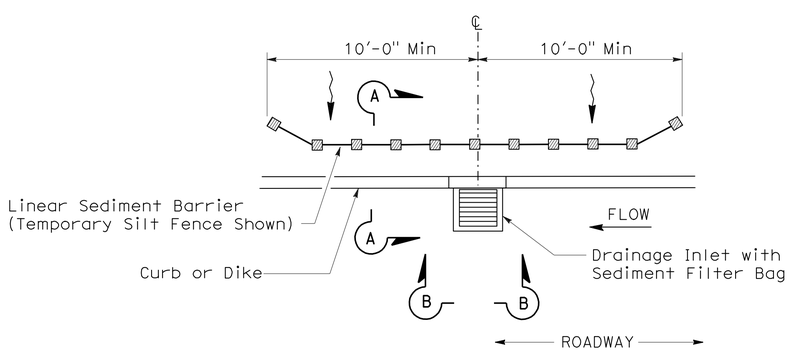

PLAN

TEMPORARY DRAINAGE INLET PROTECTION (TYPE 5) (SEDIMENT FILTER BAG)

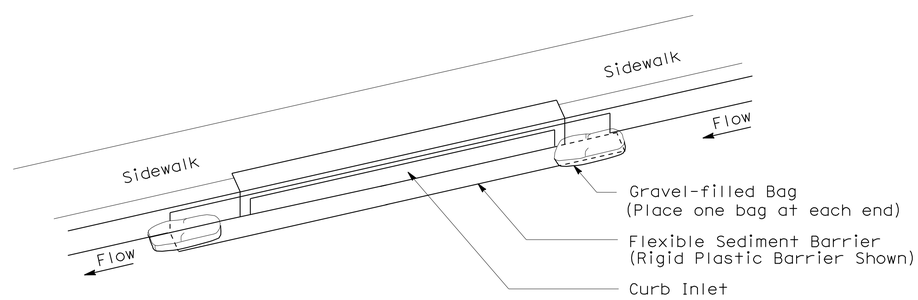

PERSPECTIVE

TEMPORARY DRAINAGE INLET PROTECTION (TYPE 6B) (CURB INLET WITHOUT GRATE)

STATE OF CALIFORNIA
DEPARTMENT OF TRANSPORTATION

TEMPORARY WATER POLLUTION CONTROL DETAILS (TEMPORARY DRAINAGE INLET PROTECTION)

NO SCALE

NSP T64 DATED AUGUST 15, 2008 SUPPLEMENTS
THE STANDARD PLANS BOOK DATED MAY 2006.

NEW STANDARD PLAN NSP T64

2006 NEW STANDARD PLAN NSP T64

7-11-08

DIST	COUNTY	ROUTE	POST MILES TOTAL PROJECT	SHEET NO.	TOTAL SHEETS
12	Ora	91	R9.2/R15.9	79	86

REGISTERED CIVIL ENGINEER

October 5, 2007
PLANS APPROVAL DATE

REGISTERED PROFESSIONAL ENGINEER Efthymios Delis No. C51434 Exp. 6-30-08 CIVIL STATE OF CALIFORNIA

The State of California or its officers or agents shall not be responsible for the accuracy or completeness of electronic copies of this plan sheet.

To accompany plans dated 7-26-10

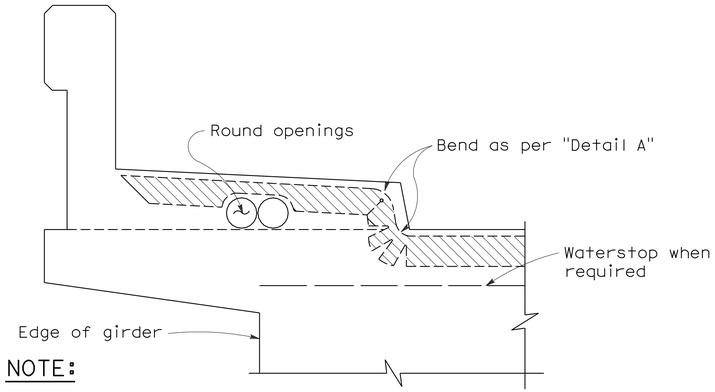

NOTE:

Type "B" seal shown. Type "A" seals to comform to the general path of seal shown, cuts for bending not required. Bend Type "A" seals 3" up into curb or barrier rail on only the low end of the seal.

CONCRETE BARRIER AND SIDEWALK

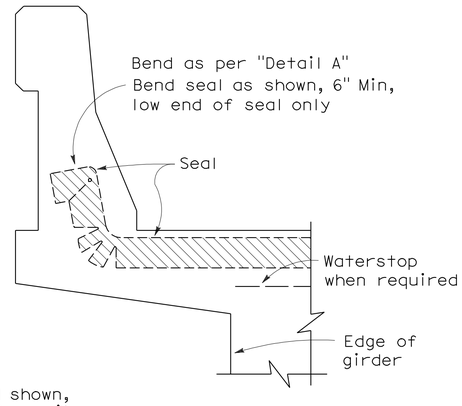

CONCRETE BARRIER

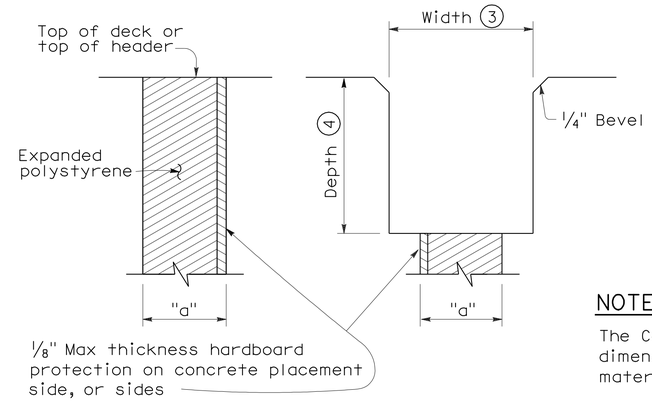

FORMING DETAIL SAWCUT DETAIL

NOTE:

The Contractor shall verify all controlling field dimensions before ordering or fabricatiing any material.

JOINT SEALS DETAILS

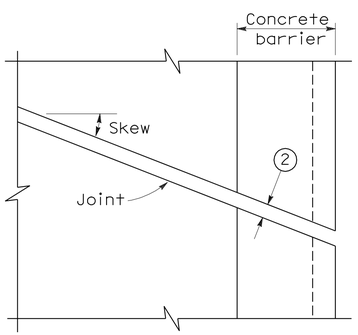

PLAN OF JOINT (SKEW ≤ 20°)

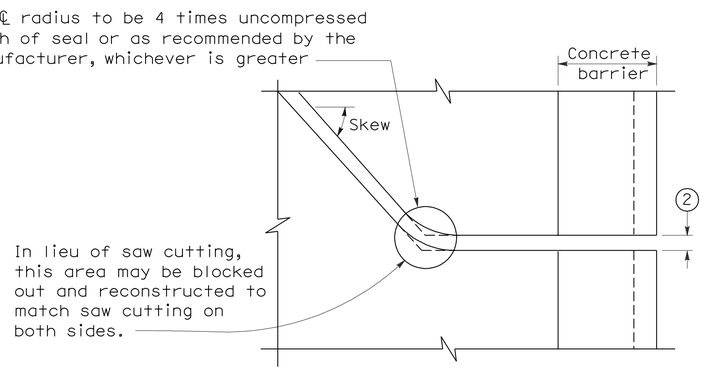

PLAN OF JOINT (SKEW > 20°)

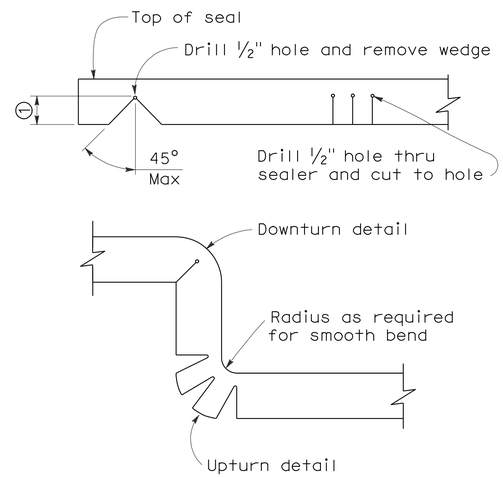

DETAIL A

NOTES:

1. Make smooth cuts from the bottom of seal to 1½" clear of top leaving at least one complete cell between the top of the cut and top of the seal. When necessary cut back of seal to clear conduit and round openings.
2. Opening in barrier to match width of sawn deck joint.
3. Sawcut groove widths shall be as ordered by the Engineer.
4. Depth of sawcut: Type A - Depth to be 2" minimum.
   Type B - Depth to be equal to or greater than the depth of seal measured along the contact surface, when compressed to minimum width position (W_2) plus dimensions shown.
5. MR (movement rating) as shown on other plan sheets.
6. Other depths must be approved by the Engineer.

DIMENSIONS "a" OF JOINT REQUIRED

Movement Rating (MR) (5)	Bridge Type	"a" Dimension Deck Concrete Placed		
		Winter	Fall-Spring	Summer
2"	All except CIP/PS	1½"	1¼"	¾"
	CIP/PS	1¼"	1"	½"
1½"	All except CIP/PS	1¼"	1"	½"
	CIP/PS	1"	¾"	½"
1"	All except CIP/PS	1"	¾"	½"
	CIP/PS	¾"	½"	½"
½"	All except CIP/PS	¾"	¾"	½"
	CIP/PS	½"	½"	½"

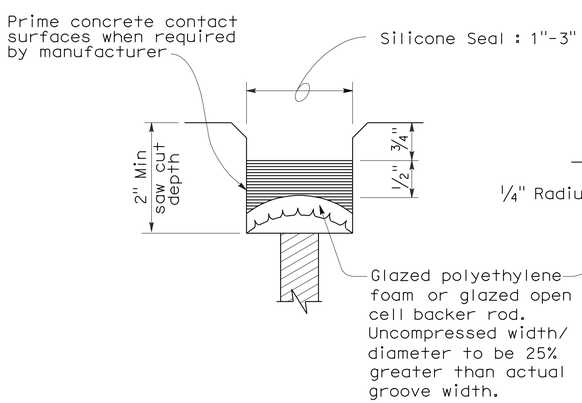

TYPE A SEAL

Movement rating : Silicone = 1" Max

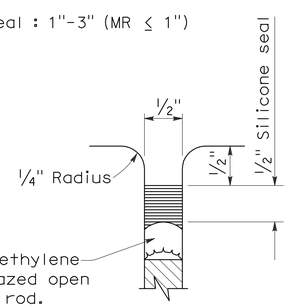

TYPE AL SEAL

Longitudinal joints only

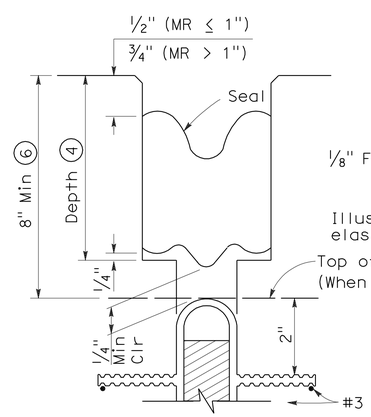

TYPE B JOINT SEAL
IN MINIMUM WIDTH POSITION (W_2)

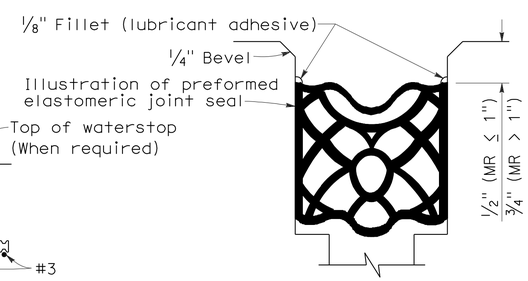

TYPE B SEAL

Movement Rating ≤ 2"

STATE OF CALIFORNIA
DEPARTMENT OF TRANSPORTATION

JOINT SEALS (MAXIMUM MOVEMENT RATING = 2")

NO SCALE

RSP B6-21 DATED OCTOBER 5, 2007 SUPERSEDES STANDARD PLAN B6-21 DATED MAY 1, 2006 - PAGE 258 OF THE STANDARD PLANS BOOK DATED MAY 2006.

REVISED STANDARD PLAN RSP B6-21

2006 REVISED STANDARD PLAN RSP B6-21

5-8-07

DIST	COUNTY	ROUTE	POST MILES TOTAL PROJECT	SHEET NO.	TOTAL SHEETS
12	Ora	91	R9.2/R15.9	80	86

REGISTERED ELECTRICAL ENGINEER

October 5, 2007
PLANS APPROVAL DATE

REGISTERED PROFESSIONAL ENGINEER Jeffery G. McRae No. E14512 Exp. 6-30-08 ELECTRICAL STATE OF CALIFORNIA

The State of California or its officers or agents shall not be responsible for the accuracy or completeness of electronic copies of this plan sheet.

To accompany plans dated 7-26-10

ELECTROLIERS

STANDARD TYPES
15, 15D
15 STRUCTURE
21, 21D STRUCTURE
30
31
32
35
36-20A

High mast light pole

Double Arm lighting standard

Existing electrolier

Electrolier foundation (Future installation)

NOTES:

1. Luminaires shall be 310 W HPS when installed on Type 21, 21D, 30, 31, 32, 35 and 36-20A Standards, unless otherwise specified. Luminaires shall be 200 W HPS when installed on other type standards or poles, unless otherwise specified.
2. Luminaires shall be the cutoff type, ANSI Type Ⅲ medium cutoff lighting distribution, unless otherwise specified.
3. Variations noted adjacent to symbol on project plans.

Electrolier (see project notes or project plans)

Luminaire on wood pole

STANDARD NOTES:

- AB — Abandon. If applied to conduit, remove conductors.
- BC — Install pull box in existing conduit run.
- BP — Pedestrian barricade, type as indicated on plan.
- CB — Install conduit into existing pull box.
- CC — Connect new and existing conduit. Remove existing conductors and install conductors as indicated.
- CF — Conduit to remain for future use. Remove conductors. Install pull wire or rope.
- DH — Detector handhole.
- FA — Foundation to be abandoned.
- IS — Install sign on signal mast arm.
- NS — No slip base on standard.
- PEC — Photoelectric control.
- PEU — Photoelectric unit.
- RC — Equipment or material to be removed and become the property of the Contractor.
- RE — Remove electrolier, fuses and ballast. Tape ends of conductors.
- RL — Relocate equipment.
- RR — Remove and reuse equipment.
- RS — Remove and salvage equipment.
- SC — Splice new to existing conductors.
- SD — Service disconnect.
- SF — Standard to remain for future use. Remove luminaire, pole conductors, fuses and ballast.
- TSP — Telephone service point.

ABBREVIATIONS AND EQUIPMENT DESIGNATIONS

PROPOSED	EXISTING	
BBS	bbs	Battery backup system
BC	bc	Bolt circle
C	C	Conduit
CCTV	cctv	Closed circuit television
CKT	ckt	Circuit
CMS	cms	Changeable message sign
DLC	dlc	Loop detector lead-in cable
EMS	ems	Extinguishable message sign
EVC	evc	Emergency vehicle cable
EVD	evd	Emergency vehicle detector
FB	fb	Flashing beacon
FBCA	fbca	Flashing beacon control assembly
FBS	fbs	Flashing beacon with slip base
FO	fo	Fiber optic
G	G	Ground (Equipment Grounding Conductor)
GFCI	GFCI	Ground fault circuit interrupt
HAR	har	Highway advisory radio
HEX	hex	Hexagonal
HPS	hps	High pressure sodium
IISNS	iisns	Internally illuminated street name sign
ISL	isl	Induction sign lighting
LED	led	Light emitting diode
LMA	lma	Luminaire mast arm
LPS	lps	Low pressure sodium
LTG	ltg	Lighting
LUM	lum	Luminaire
MAT	mat	Mast arm mounting vehicle signal faces, top attachment
MAS	mas	Mast arm mounting vehicle signal faces, side attachment
MAS-4A	mas-4A	Mast arm mounting vehicle signal faces, side attachment - 4 signal section
MAS-4B	mas-4B	
MAS-4C	mas-4C	
MAS-5A	mas-5A	Mast arm mounting vehicle signal faces, side attachment - 5 signal section
MAS-5B	mas-5B	
MC	mc	Mercury contactor
M/M	m/m	Multiple to multiple transformer
MT	mt	Conduit with pull wire or rope only
MTG	mtg	Mounting
	mv	Mercury vapor lighting fixture
N	N	Neutral (Grounded Conductor)
NC	NC	Normally closed
NO	NO	Normally open
PB	pb	Pull box
PEC	pec	Photoelectric control (Type Ⅰ, Ⅱ, Ⅲ, Ⅳ or Ⅴ as shown)
PED	ped	Pedestrian
PEU	peu	Photoelectric unit
PPB	ppb	Pedestrian push button
RL		Relocated equipment
RM	rm	Ramp metering
SB	sb	Slip base
SIC	sic	Signal interconnect cable
SIG	sig	Signal
SMA	sma	Signal mast arm
SNS	sns	Street name sign
SP	sp	Service point
TDC	tdc	Telephone demarcation cabinet
TMS	tms	Traffic monitoring station
TOS	tos	Traffic Operations System
VEH	veh	Vehicle
XFMR	xfmr	Transformer
COMM	comm	Communication
RWIS	rwis	Roadway weather information system

SOFFIT AND WALL MOUNTED LUMINAIRES

Pendant, 70 W HPS unless otherwise specified.

Flush, 70 W HPS unless otherwise specified.

Wall surface, 70 W HPS unless otherwise specified.

Existing soffit or wall luminaire to remain unmodified.

Existing soffit or wall luminaire to be modified as specified.

NOTE:

Arrow indicates "street side" of luminaire.

STATE OF CALIFORNIA
DEPARTMENT OF TRANSPORTATION

ELECTRICAL SYSTEMS (SYMBOLS AND ABBREVIATIONS)

NO SCALE

RSP ES-1A DATED OCTOBER 5, 2007 SUPERSEDES STANDARD PLAN ES-1A DATED MAY 1, 2006 - PAGE 400 OF THE STANDARD PLANS BOOK DATED MAY 2006.

REVISED STANDARD PLAN RSP ES-1A

2006 REVISED STANDARD PLAN RSP ES-1A

DIST	COUNTY	ROUTE	POST MILES TOTAL PROJECT	SHEET NO.	TOTAL SHEETS
12	Ora	91	R9.2/R15.9	81	86

REGISTERED ELECTRICAL ENGINEER

October 5, 2007
PLANS APPROVAL DATE

REGISTERED PROFESSIONAL ENGINEER Jeffery G. McRae No. E14512 Exp. 6-30-08 ELECTRICAL STATE OF CALIFORNIA

The State of California or its officers or agents shall not be responsible for the accuracy or completeness of electronic copies of this plan sheet.

To accompany plans dated 7-26-10

CONDUIT

PROPOSED	EXISTING	
		Lighting Conduit, unless otherwise indicated or noted
		Traffic signal conduit
C	c	Communication conduit
T	t	Telephone conduit
F	f	Fire alarm conduit
FO	fo	Fiber optic conduit
		Conduit termination (RSP ES-9A C)
R	r	Conduit riser in/on structure or service pole

SERVICE EQUIPMENT

PROPOSED	EXISTING	
OH	oh	Overhead lines
U	U	Wood pole "U" indicates utility owned
		Pole guy with anchor
		Utility transformer - ground mounted
III		Service equipment enclosure type
		Service equipment enclosure door indicates front of enclosure
T	t	Telephone demarcation cabinet

POLE-MOUNTED SERVICE DESIGNATION

Type of installation

TYPE H SERVICE - 28'-10" ← Pole height above grade

ILLUMINATED OVERHEAD SIGN

PROPOSED	EXISTING	
		Overhead sign - Single post
		Overhead sign - Two post
		Overhead sign - Mounted on structure
		Overhead sign with electrolier

SIGNAL EQUIPMENT

PROPOSED	EXISTING	
		Pedestrian signal face
		Pedestrian push button post
		Pedestrian barricade
		Vehicle signal face (with backplate, 3-Section: red, yellow and green)
		Vehicle signal face with angle visors
PV	PV	Modifications of basic symbols: "L" indicates all non-arrow sections louvered "LG" indicates louvered green section only "PV" indicates 12" programmed visibility sections "8" indicates all 8" sections (only when specified)
		Type 15TS and Vehicle signal face
		Vehicle signal face with red, yellow and green left arrow sections
		Vehicle signal face with red and yellow sections and up green arrow
		Vehicle signal face (5 Section) with red, yellow and green sections and yellow and green right arrows
		Type 1 Standard and attached vehicle signal faces
		Standard with signal mast arm only and attached vehicle signal faces and internally illuminated street name sign
		Type 33 Standard, Left-turn vehicle signal face and sign
		Standard with luminaire and signal mast arms and attached vehicle signal faces
		Cantilever flashing beacon Type 9 Frame, with a sign unless otherwise specified or indicated
		Type 15-FBS Standard with two vehicle signal face sections with lens, backplate and visor with a sign
R	Y	Flashing beacon. One vehicle signal face section with lens, backplate and visor. "R" indicates red indication, "Y" indicates yellow indication
		Controller assembly. Door indicates front of cabinet

SIGNAL EQUIPMENT Cont

PROPOSED	EXISTING	
		Guard post
		Type 1 Standard with "Meter On" sign
		Emergency Vehicle detector

NOTES:

1. All signal sections shall be 12" unless shown otherwise.
2. Signal heads shall be provided with backplates unless shown otherwise.
3. Signal indication shall be LED.

STATE OF CALIFORNIA
DEPARTMENT OF TRANSPORTATION

ELECTRICAL SYSTEMS (SYMBOLS AND ABBREVIATIONS)

NO SCALE

RSP ES-1B DATED OCTOBER 5, 2007 SUPERCEDES STANDARD PLAN ES-1B DATED MAY 1, 2006 - PAGE 401 OF THE STANDARD PLANS BOOK DATED MAY 2006.

REVISED STANDARD PLAN RSP ES-1B

2006 REVISED STANDARD PLAN RSP ES-1B

DIST	COUNTY	ROUTE	POST MILES TOTAL PROJECT	SHEET NO.	TOTAL SHEETS
12	Ora	91	R9.2/R15.9	82	86

REGISTERED ELECTRICAL ENGINEER

October 5, 2007
PLANS APPROVAL DATE

REGISTERED PROFESSIONAL ENGINEER Jeffery G. McRae No. E14512 Exp. 6-30-08 ELECTRICAL STATE OF CALIFORNIA

The State of California or its officers or agents shall not be responsible for the accuracy or completeness of electronic copies of this plan sheet.

To accompany plans dated 7-26-10

EQUIPMENT IDENTIFICATION

ILLUMINATED SIGN IDENTIFICATION NUMBER:

Sign No. 12345 — Sign number - Place on post or structure

10 ISL SCI 1.0

- 1.0 — Transformer rating (kVA)
- SCI — Lighting control type
- ISL — Number and type of fixtures

Do NOT place on standard or structure

ELECTROLIER OR EQUIPMENT IDENTIFICATION NUMBER:

12345 - 15'-0"

- 15'-0" — Mast arm length, if shown. Do not place on standard or structure.
- 12345 — Equipment number - Place on standard or structure. Existing equipment numbers are shown in parenthesis

CONDUIT AND CONDUCTOR IDENTIFICATION:

1½"C, 2#10, 15#14, 2 DLC

- 2#10, 15#14, 2 DLC — Number and size of conductors and cables
- 1½"C — Size of conduit in inches

Ø1, Ø2, Ø2P, etc.	Traffic phase identification for signal faces, detectors and phase diagrams
1 2 3	Project note numbers
A B C	Equipment description, installation or item numbers
1 2 3	Conduit run numbers

SIGNAL AND LIGHTING STANDARD (TYPICAL DESIGNATION):

19A - 3 - 100

- 100 — Wind velocity = 100 mph
- 3 — Case 3 arm loading
- 19A — Standard type
- Standard Plan sheet number
- Detail number or letter

MISCELLANEOUS EQUIPMENT

PROPOSED	EXISTING	
CMS	cms	Changeable message sign
		Closed circuit television camera
		Highway advisory radio pole and antenna
EMS	ems	Extinguishable message sign
M V	m v	Detection device M = Microwave sensor V = Video image sensor

WIRING DIAGRAM LEGEND

P	Pole
CB	Circuit breaker
A	Ampere
V	Volt
M	Metered
UM	Unmetered
NB	Neutral bus
GB	Ground bus
G	Equipment grounding conductor
N	Grounded conductor (Neutral)

- External conductor
- Conductor or bus
- Tie point
- Contactor coil
- Contactor, Contact NO
- Terminal blocks
- Contactor, Contact NC
- Enclosure bond
- Grounding electrode
- Circuit breaker
- Receptacle

PULL BOXES

PROPOSED EXISTING

Pull box-No. 5 unless otherwise indicated or noted.

3 — 9A(21)

Pull box-Additional designations or descriptions

3	= No. 3½ pull box
5	= No. 5 pull box
6	= No. 6 pull box
7	= No. 7 (Ceiling pull box)
8	= No. 8 (Pendant soffit pull box)
9	= No. 9 pull box
9A	= No. 9A pull box

(C)	= Communications pull box
(E)	= Pull box with extension
(S)	= Sprinkler control pull box
(21)	= Anchor bolts and conduit for future installation of Type 21 Standard
(T)	= Traffic pull box

VEHICLE DETECTORS

5 J 9 U

- U = Upper
- L = Lower
- Slot number in input file
- Input file (I or J)
- Phase

PROPOSED EXISTING

	Type A detector loop. Outline of sawcut shown.
	Type B detector loop. Outline of sawcut shown.
	Type C detector loop. Outline of sawcut shown.
	Type D detector loop. Outline of sawcut shown.
	Type E detector loop. Outline of sawcut shown.
	Type Q detector loop. Outline of sawcut shown.
	Magnetic detector
DH / dh	Detector handhole
	Microwave or video detection zone

STATE OF CALIFORNIA
DEPARTMENT OF TRANSPORTATION

ELECTRICAL SYSTEMS (SYMBOLS AND ABBREVIATIONS)

NO SCALE

RSP ES-1C DATED OCTOBER 5, 2007 SUPERCEDES STANDARD PLAN ES-1C DATED MAY 1, 2006 - PAGE 402 OF THE STANDARD PLANS BOOK DATED MAY 2006.

REVISED STANDARD PLAN RSP ES-1C

2006 REVISED STANDARD PLAN RSP ES-1C

DIST	COUNTY	ROUTE	POST MILES TOTAL PROJECT	SHEET NO.	TOTAL SHEETS
12	Ora	91	R9.2/R15.9	83	86

REGISTERED ELECTRICAL ENGINEER

October 5, 2007
PLANS APPROVAL DATE

REGISTERED PROFESSIONAL ENGINEER Jeffery G. McRae No. E14512 Exp. 6-30-08 ELECTRICAL STATE OF CALIFORNIA

The State of California or its officers or agents shall not be responsible for the accuracy or completeness of electronic copies of this plan sheet.

To accompany plans dated 7-26-10

LOOP INSTALLATION PROCEDURE

1. Loops shall be centered in lanes.
2. Saw slots in pavement for loop conductors as shown in details.
3. Distance between side of loop and a lead-in saw cut from adjacent detectors shall be 2'-0" minimum. Distance between lead-in saw cuts shall be 6" minimum.
4. Bottom of saw slot shall be smooth with no sharp edges.
5. Slots shall be washed until clean, blown out and thoroughly dried before installing loop conductors.
6. Adjacent loops on the same sensor unit channel shall be wound in opposite directions.
7. Identify and tag loop circuit pairs in the pull box with loop number, start (S) and finish (F) of conductor. Identify and tag lead-in-cable with sensor number and phase.
8. Install loop conductor in slot using a 3/16" to 1/4" thick wood paddle. Hold loop conductors with wood paddles (at the bottom of the sawed slot) during sealant placement.
9. No more than 2 twisted pairs shall be installed in one sawed slot.
10. Allow additional 5'-0" of slack length of conductor for the lead-in run to pull box.
11. The additional length of each conductor for each loop shall be twisted together into a pair (6 turns per 3'-4" minimum) before being placed in the slot and conduit leading to pull box.
12. Test each loop circuit for continuity, circuit resistance and insulation resistance at the pull box before filling slots.
13. Fill slots as shown in details.
14. Splice loop conductors to lead-in-cable. Splices shall be soldered.
15. End of lead-in-cable and Type 2 loop conductor shall be waterproofed prior to installing in conduit to prevent moisture from entering the cable.
16. Lead-in-cable shall not be spliced between the pull box and the controller cabinet terminals.
17. Test each loop circuit for continuity, circuit resistance and insulation resistance at the controller cabinet location.
18. Where loop conductors are not to be spliced to a lead-in-cable, the ends of the conductors shall be taped and waterproofed with electrical insulating coating.

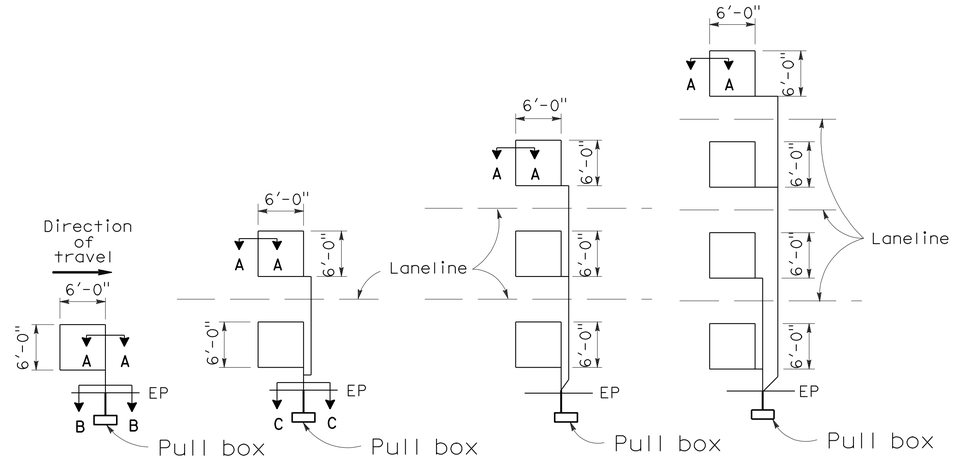

TYPE 1A INSTALLATION | TYPE 2A INSTALLATION | TYPE 3A INSTALLATION | TYPE 4A INSTALLATION

SAWCUT DETAILS

(Type A loop detector configurations illustrated)

1. 1A thru 4A = 1 Type A loop configuration in each lane.
2. 1B thru 4B = 1 Type B loop configuration in each lane.
3. 1C = 1 Type C loop configuration entering lanes as required.
4. 1D thru 4D = 1 Type D loop configuration in each lane.
5. 1E thru 4E = 1 Type E loop configuration in each lane.
6. 1Q thru 4Q = 1 Type Q loop configuration in each lane. (Use Type A, B, C, D, E or Q loop detector configurations only when specified or shown on plans)

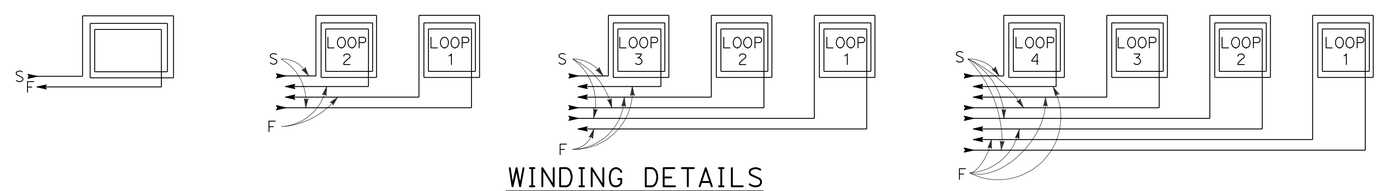

WINDING DETAILS

See Notes 6 and 7

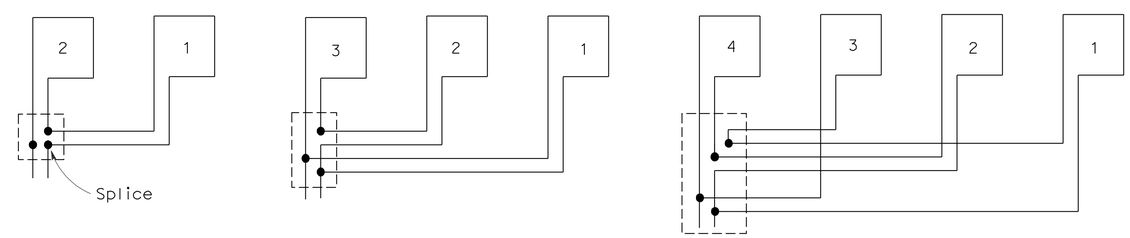

TYPICAL LOOP CONNECTIONS

(Dashed lines represent the pull box)

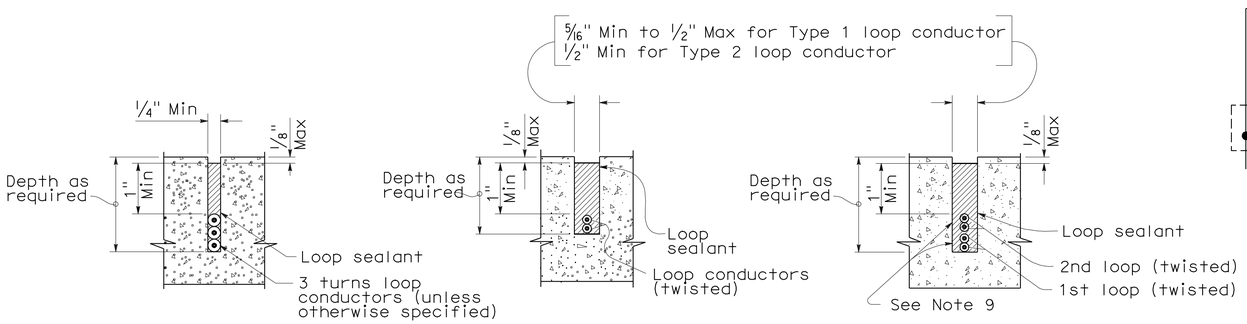

SECTION A-A | SECTION B-B | SECTION C-C

SLOT DETAILS - TYPE 1 AND TYPE 2 LOOP CONDUCTOR

STATE OF CALIFORNIA
DEPARTMENT OF TRANSPORTATION

ELECTRICAL SYSTEMS (DETECTORS)

NO SCALE

RSP ES-5A DATED OCTOBER 5, 2007 SUPERCEDES STANDARD PLAN ES-5A DATED MAY 1, 2006 - PAGE 423 OF THE STANDARD PLANS BOOK DATED MAY 2006.

REVISED STANDARD PLAN RSP ES-5A

2006 REVISED STANDARD PLAN RSP ES-5A

DIST	COUNTY	ROUTE	POST MILES TOTAL PROJECT	SHEET NO.	TOTAL SHEETS
12	Ora	91	R9.2/R15.9	84	86

REGISTERED CIVIL ENGINEER

January 18, 2008
PLANS APPROVAL DATE

REGISTERED PROFESSIONAL ENGINEER
Stanley P. Johnson
No. C57793
Exp. 03-31-08
CIVIL
STATE OF CALIFORNIA

The State of California or its officers or agents shall not be responsible for the accuracy or completeness of electronic copies of this plan sheet.

To accompany plans dated 7-26-10

LUMINAIRE ARM DATA

PROJECTED LENGTH	THICKNESS	MINIMUM OD @ POLE	MOUNTING HEIGHT
* 6'-0"	0.1196"	3¼"	36'-9"±
8'-0"		3½"	37'-3"±
10'-0"		3¾"	38'-0"±
12'-0"		3¾"	39'-0"±
15'-0"		4¼"	39'-6"±
** 20'-0"	0.1793"	5"	37'-0"±

* Type 30 - arm length 6'-0" - 15'-0" maximum
** Type 31 - arm lengths 20'-0"

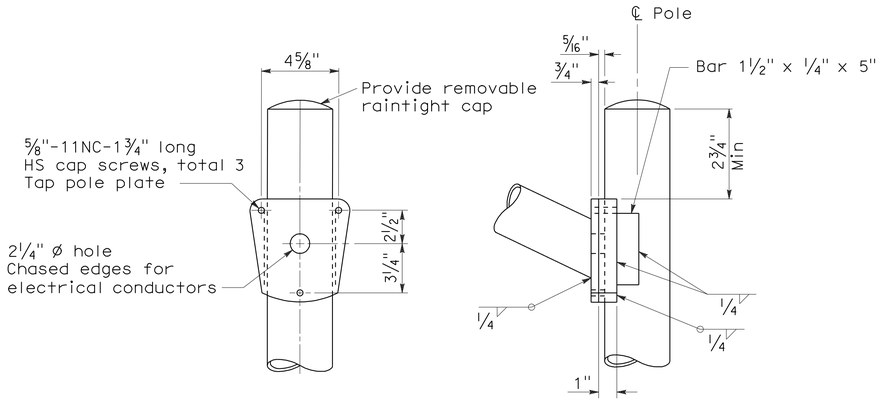

DETAIL A - TYPE 30

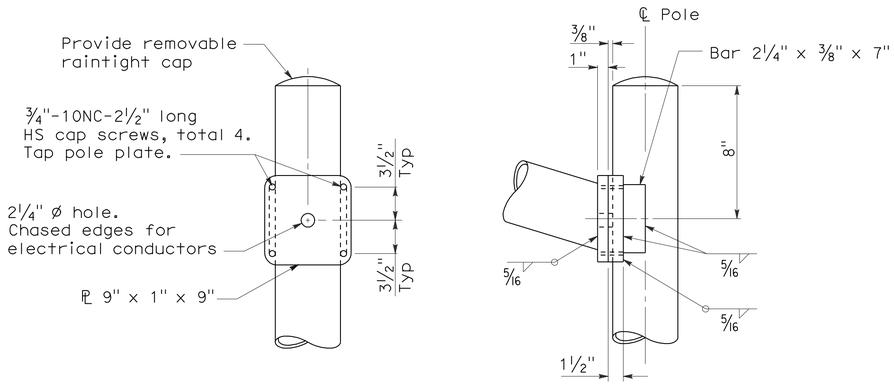

DETAIL A - TYPE 31

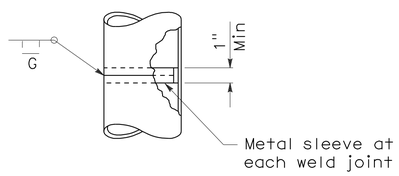

POLE SPLICE

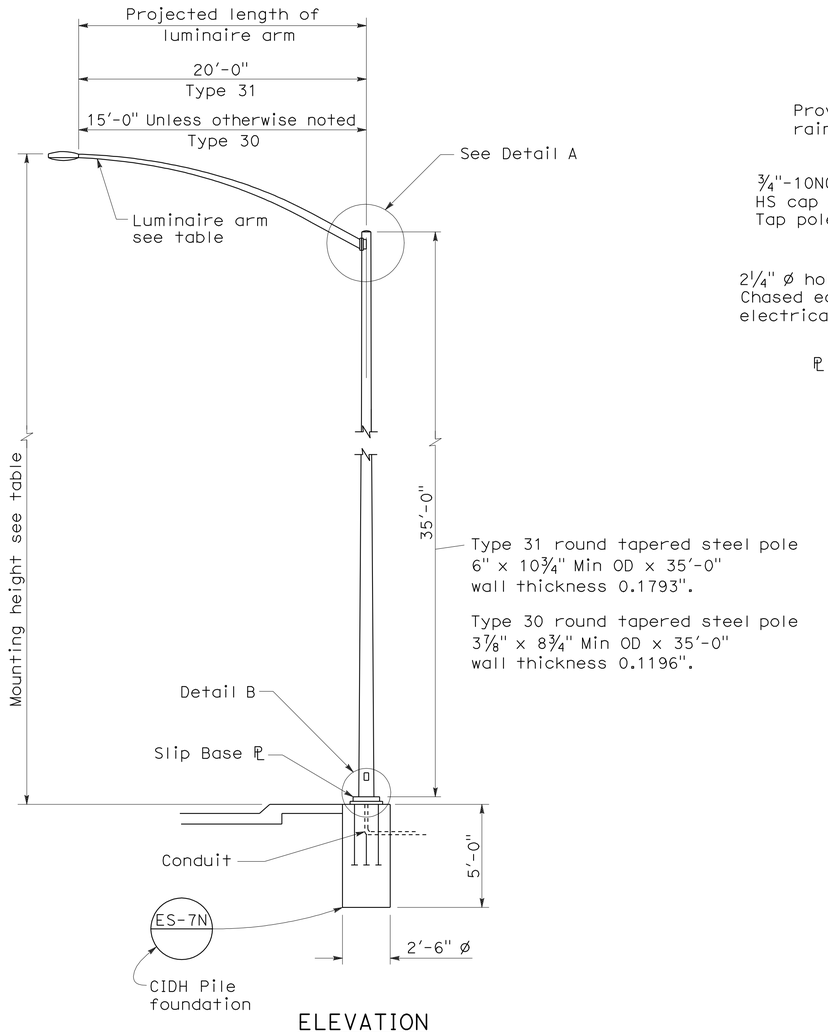

ELEVATION

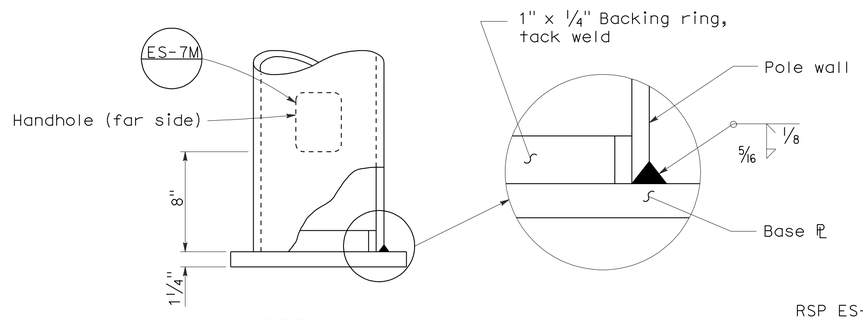

DETAIL B

NOTES:

1. Sheet steel shall have a minimum yield of 48,000 psi.
2. For slip base details see Standard Plan ES-6F.
3. For Type 30 fixed base use Type 15 base plate, and foundation shown on Revised Standard Plan RSP ES-6A. Use 1¼" Dia x 3'-6" x 4" anchor bolts.
4. For Type 31 fixed base use Type 32 base plate, anchor bolts and foundation on Standard Plan ES-6G.
5. Handhole shall be located on downstream side of traffic unless noted otherwise on plans.
6. For additional general notes refer to Standard Plan ES-7M.

STATE OF CALIFORNIA
DEPARTMENT OF TRANSPORTATION

ELECTRICAL SYSTEMS (LIGHTING STANDARD TYPES 30 AND 31)

NO SCALE

RSP ES-6E DATED JANUARY 18, 2008 SUPERCEDES STANDARD PLAN ES-6E DATED MAY 1, 2006 - PAGE 430 OF THE STANDARD PLANS BOOK DATED MAY 2006.

REVISED STANDARD PLAN RSP ES-6E

2006 REVISED STANDARD PLAN RSP ES-6E

11-19-07

DIST	COUNTY	ROUTE	POST MILES TOTAL PROJECT	SHEET No	TOTAL SHEETS
12	Ora	91	R9.2/R15.9	85	86

REGISTERED CIVIL ENGINEER 05-27-10 DATE

7-26-10
PLANS APPROVAL DATE

REGISTERED PROFESSIONAL ENGINEER RICHARD MELKO No. 61617 Exp. 06-30-11 CIVIL STATE OF CALIFORNIA

The State of California or its officers or agents shall not be responsible for the accuracy or completeness of electronic copies of this plan sheet.

CURVE DATA

R = 3000′-0″±
Δ = 31°36′00″±
T = 848.91′±
L = 1654.57′±

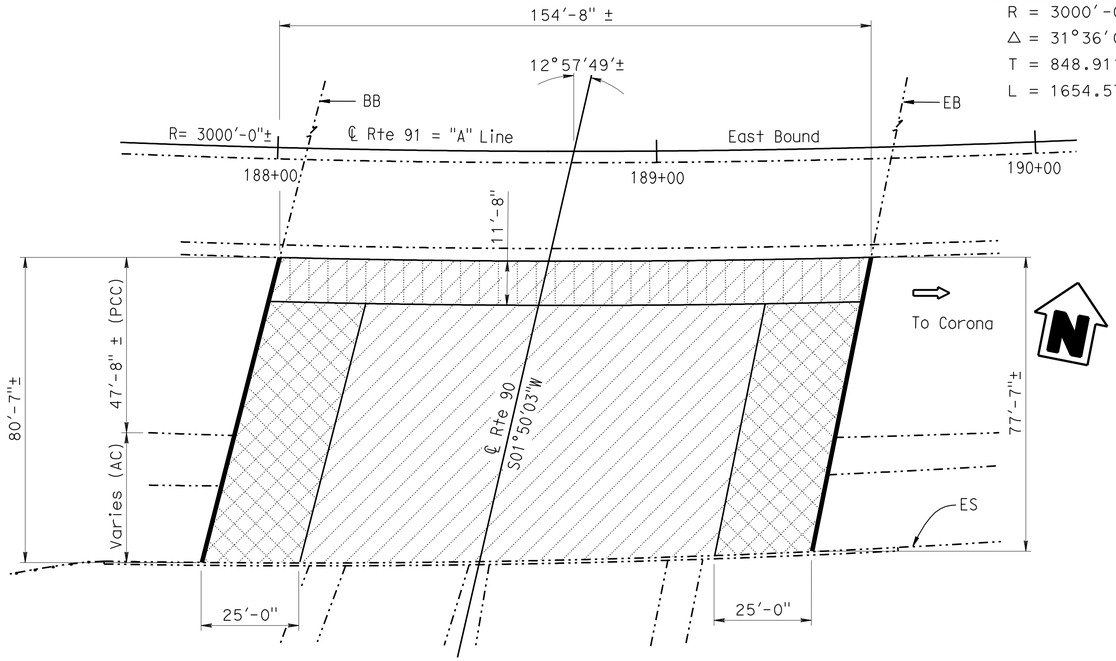

RTE 91/90 SEPARATION RIGHT BRIDGE

BR NO. 55-0474, ROUTE 91, Ora, PM 11.83
1″ = 20′

RTE 91/90 SEPERATION RIGHT BR. 55-0474
QUANTITIES

REMOVE CONCRETE DECK SURFACE	5,330	SQFT
REMOVE UNSOUND CONCRETE	523	CF
PREPARE CONCRETE BRIDGE DECK SURFACE	12,558	SQFT
CLEAN EXPANSION JOINT	162	LF
RAPID SETTING CONCRETE (PATCH)	170	CF
FURNISH POLYESTER CONCRETE OVERLAY	1,197	CF
PLACE POLYESTER CONCRETE OVERLAY	12,558	SQFT
JOINT SEAL (MR 1½″)	162	LF
PUBLIC SAFETY PLAN	LUMP	SUM

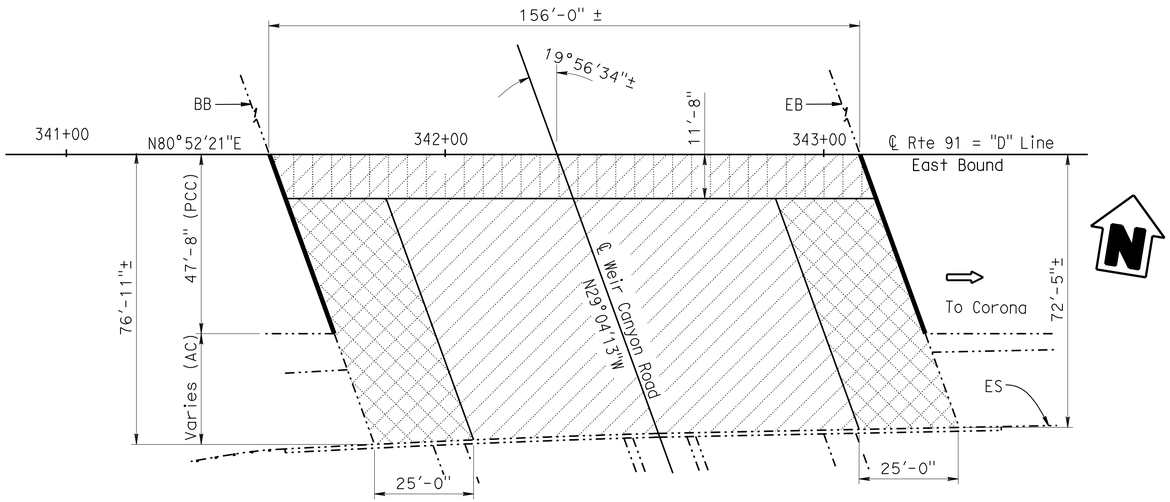

WEIR CANYON ROAD UC RIGHT BRIDGE

BR NO. 55-0505R, ROUTE 91, Ora, PM 14.43
1″ = 20′

WEIR CANYON ROAD UC RIGHT BR. 55-0505R
QUANTITIES

REMOVE CONCRETE DECK SURFACE	5,195	SQFT
REMOVE UNSOUND CONCRETE	483	CF
PREPARE CONCRETE BRIDGE DECK SURFACE	11,580	SQFT
CLEAN EXPANSION JOINT	117	LF
RAPID SETTING CONCRETE (PATCH)	157	CF
FURNISH POLYESTER CONCRETE OVERLAY	1,110	CF
PLACE POLYESTER CONCRETE OVERLAY	11,580	SQFT
JOINT SEAL (MR½″)	117	LF
PUBLIC SAFETY PLAN	LUMP	SUM

NOTE

Thermoplastic Striping along the OCTA Express Lanes shall be avoided and not damaged by the grinding and Polyester placement operations

LEGEND (APPLY TO ALL SHEETS)

Indicates existing

Indicates location of remove existing joint seal and place new joint seal. See "JOINT SEAL TABLE" on "OVERLAY DETAILS" sheet. For details not shown, see RSP B6-21

Indicates limits of prepare existing concrete deck and place new ¾″ Min. depth polyester concrete overlay with longitudinal tining, see "OVERLAY DETAILS" sheet. Prior to placing new polyester concrete overlay, remove unsound concrete and repair as shown on the "Deck Repair Detail"

Indicates limits of remove existing concrete deck surface along approach. For details, see "DECK SURFACE REMOVAL DETAIL (Approach)" on "OVERLAY DETAILS" sheet

Indicates limits of remove existing concrete deck surface along lane. For details, see "DECK SURFACE REMOVAL DETAIL (Lane)" on "OVERLAY DETAILS" sheet

INDEX TO PLANS

SHEET NO.	TITLE
1	GENERAL PLAN
2	OVERLAY DETAILS

STANDARD PLANS DATED MAY 2006

SHEET NO.	TITLE
A10A	ACRONYMS AND ABBREVIATIONS (SHEET 1 OF 2)
A10B	ACRONYMS AND ABBREVIATIONS (SHEET 2 OF 2)
A10C	SYMBOLS (SHEET 1 OF 2)
A10D	SYMBOLS (SHEET 2 OF 2)
RSP B6-21	JOINT SEALS (MAXIMUM MOVEMENT RATING = 2")

STANDARD PLAN SHEET NUMBER
DETAIL NUMBER

NOTE:
THE CONTRACTOR SHALL VERIFY ALL CONTROLLING FIELD DIMENSIONS BEFORE ORDERING OR FABRICATING ANY MATERIAL.

Fritz Hoffman
DESIGN ENGINEER

	BY	CHECKED
DESIGN	Richard Melko	Hernan Perez
DETAILS	George Zweier	Hernan Perez
QUANTITIES	Richard Melko	Hernan Perez

LOAD & RESISTANCE FACTOR DESIGN — LIVE LOADING: HL93 W/"LOW-BOY"; PERMIT DESIGN VEHICLE

	BY	CHECKED
LAYOUT	George Zweier	Richard Melko
SPECIFICATIONS	Tanya Kershell	PLANS AND SPECS COMPARED Tanya Kershell

STATE OF CALIFORNIA
DEPARTMENT OF TRANSPORTATION

DIVISION OF ENGINEERING SERVICES
STRUCTURE DESIGN
DESIGN BRANCH 6

BRIDGE NO. Varies
POST MILE Varies

RTE 91 BRIDGES (DECK OVERLAY & JOINT SEALS)
GENERAL PLAN

ORIGINAL SCALE IN INCHES FOR REDUCED PLANS 0 1 2 3

CU 12
EA OK6801

DISREGARD PRINTS BEARING EARLIER REVISION DATES

REVISION DATES: 01-25-10 05-27-10 02-04-10 02-09-10 02-18-10 02-18-10 03-02-10 03-05-10 03-29-10 05-26-10

SHEET 1 OF 2

FILE => 55-474lr-55-505lr-a-gp.dgn

STRUCTURES DESIGN GENERAL PLAN SHEET (ENGLISH) (REV.07-24-06)

USERNAME => trrichf DATE PLOTTED => 27-JUL-2010 TIME PLOTTED => 16:33

DIST	COUNTY	ROUTE	POST MILES TOTAL PROJECT	SHEET No	TOTAL SHEETS
12	Ora	91	R9.2/R15.9	86	86

REGISTERED CIVIL ENGINEER 05-27-10 DATE

7-26-10
PLANS APPROVAL DATE

REGISTERED PROFESSIONAL ENGINEER RICHARD MELKO No. 61617 Exp. 06-30-11 CIVIL STATE OF CALIFORNIA

The State of California or its officers or agents shall not be responsible for the accuracy or completeness of electronic copies of this plan sheet.

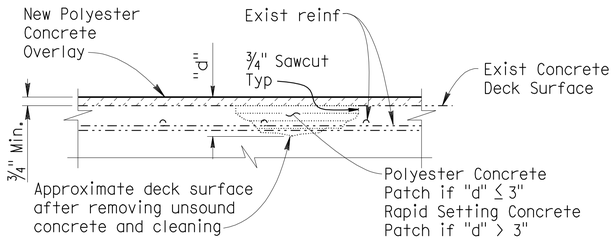

DECK REPAIR DETAIL

NO SCALE

LEGEND (This sheet only)

Indicates Polyester Concrete or Rapid setting Concrete Patch

NOTE

Locations to be determined by the Engineer. Reinforcement may be encountered during deck concrete removal

DECK REPAIR TABLE

BRIDGE NUMBER	TOTAL DECK AREA (SQFT)	Approximate Area Remove Unsound Concrete and place Polyester Concrete Patch (%)	Approximate Area Remove Unsound Concrete and place Rapid Setting Concrete Patch (%)	APPROXIMATE DEPTH (INCHES)
55-0474	12,558	15	5	4
55-0505R	11,580	15	5	4

Locations to be determined by the Engineer.
For details see "DECK REPAIR DETAIL"

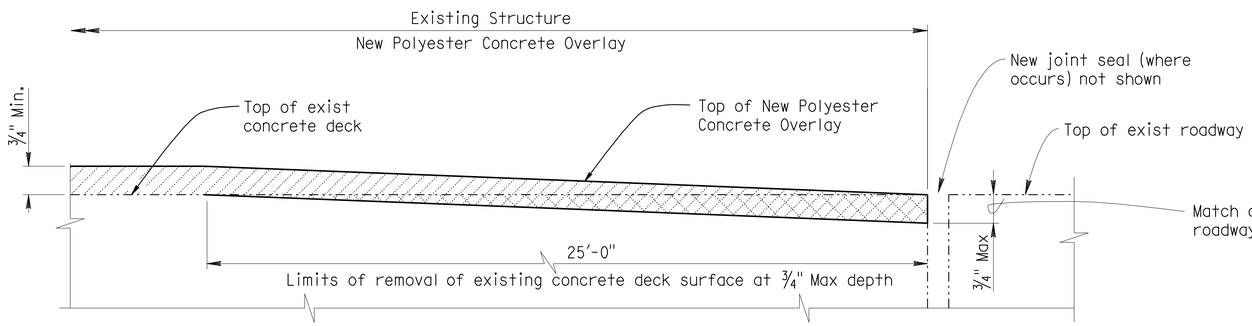

DECK SURFACE REMOVAL DETAIL (Approach)

NO SCALE

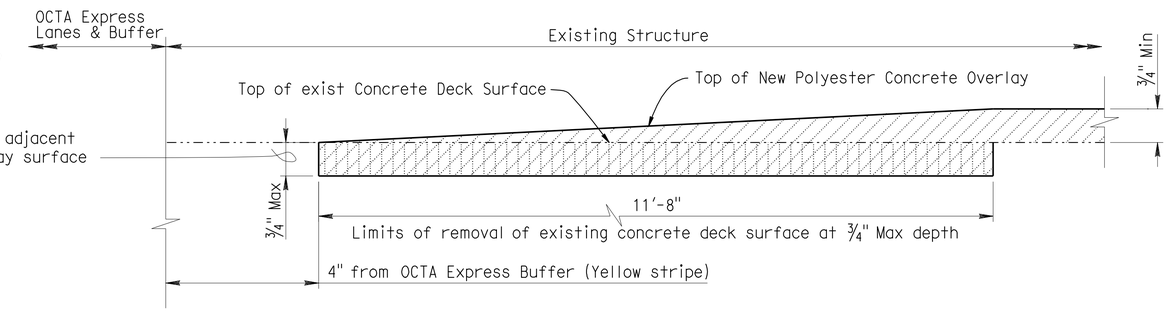

DECK SURFACE REMOVAL DETAIL (Lane)

NO SCALE

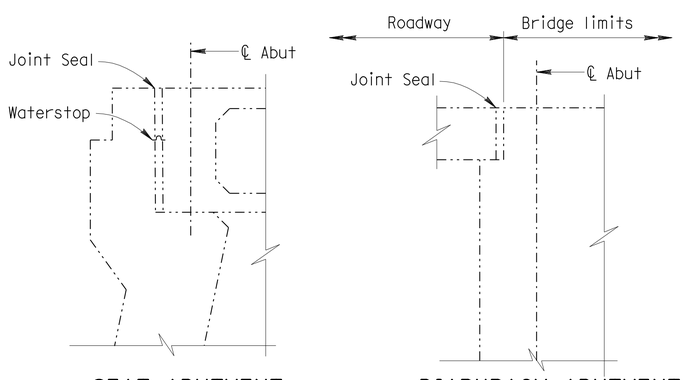

SEAT ABUTMENT
Br. No. 55-0474

DIAPHRAGM ABUTMENT
Br. No. 55-0505R

JOINT SEAL LOCATION

NO SCALE

LEGEND:

BB = Paving notch at beginning of bridge
EB = Paving notch at end of bridge

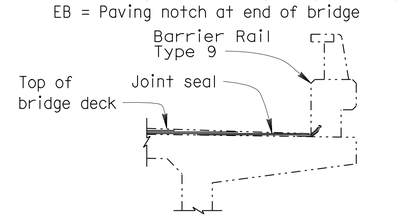

JOINT SEAL AT LOW SIDE OF DECK

Details shown for illustration purposes only.
For use only where deck joint matches the barrier rail joint
NO SCALE

JOINT SEAL TABLE

BRIDGE NUMBER	LOCATION		MINIMUM "MR" (inches)	APPROX LENGTH (ft)	EXISTING WATERSTOP	APPROX DEPTH TO CLEAN EXPANSION JOINT (inches)
55-0474	Abut 1	BB	1½	83	Yes	6
	Abut 2	EB	1½	79	Yes	6
55-0505R	Abut 1	BB	½ ✳	61	No	11½
	Abut 3	EB	½ ✳	56	No	11½

✳ Silicone only

NOTE:
THE CONTRACTOR SHALL VERIFY ALL CONTROLLING FIELD DIMENSIONS BEFORE ORDERING OR FABRICATING ANY MATERIAL.

	BY	CHECKED
DESIGN	Richard Melko	Hernan Perez
DETAILS	George Zweier	Hernan Perez
QUANTITIES	Richard Melko	Hernan Perez

STATE OF CALIFORNIA
DEPARTMENT OF TRANSPORTATION

DIVISION OF ENGINEERING SERVICES
STRUCTURE DESIGN
DESIGN BRANCH 6

BRIDGE NO. Varies
POST MILE Varies

RTE 91 BRIDGES (DECK OVERLAY & JOINT SEALS)
OVERLAY DETAILS

STRUCTURES DESIGN DETAIL SHEET (ENGLISH) (REV. 10/25/05)

ORIGINAL SCALE IN INCHES FOR REDUCED PLANS 0 1 2 3

CU 12
EA 0K6801

DISREGARD PRINTS BEARING EARLIER REVISION DATES

REVISION DATES: 02-04-10 02-09-10 02-18-10 02-18-10 03-02-10 03-03-10 03-29-10 05-27-10

SHEET 2 OF 2

FILE => 55-474lr-55-505lr-a-jntdt.dgn

USERNAME => trrichf DATE PLOTTED => 27-JUL-2010 TIME PLOTTED => 16:33