| Dist | COUNTY | ROUTE | POST MILES TOTAL PROJECT | SHEET No. | TOTAL SHEETS |
|---|---|---|---|---|---|
| 12 | Ora | 22 | R8.8/R9.1 | 1 | 42 |

ACNH-P022(023)E

STATE OF CALIFORNIA
# DEPARTMENT OF TRANSPORTATION

# PROJECT PLANS FOR CONSTRUCTION ON
# STATE HIGHWAY

## IN ORANGE COUNTY
## IN GARDEN GROVE
## AT HASTER STREEET OFF-RAMP

TO BE SUPPLEMENTED BY STANDARD PLANS DATED MAY 2006

INDEX OF PLANS


| SHEET No. | DESCRIPTION |
|---|---|
| 1 | TITLE AND LOCATION MAP |
| 2 | TYPICAL CROSS SECTIONS |
| 3 | LAYOUT |
| 4 | UTILITY PLAN |
| 5 | STAGE CONSTRUCTION PLAN |
| 6 | TRAFFIC HANDLING PLAN |
| 7 | PAVEMENT DELINEATION PLAN |
| 8-9 | SIGN PLAN AND QUANTITIES |
| 10 | PLANT LIST |
| 11 | PLANT REMOVAL PLAN |
| 12 | PLANTING PLAN |
| 13 | IRRIGATION REMOVAL AND EXISTING IRRIGATION PLAN |
| 14-15 | IRRIGATION PLAN AND DETAILS |
| 16-17 | SIGNAL AND LIGHTING |
| 18-42 | REVISED STANDARD PLANS |


THE STANDARD PLANS LIST APPLICABLE TO THIS CONTRACT IS INCLUDED IN THE NOTICE TO BIDDERS AND SPECIAL PROVISIONS BOOK.

LOCATION MAP

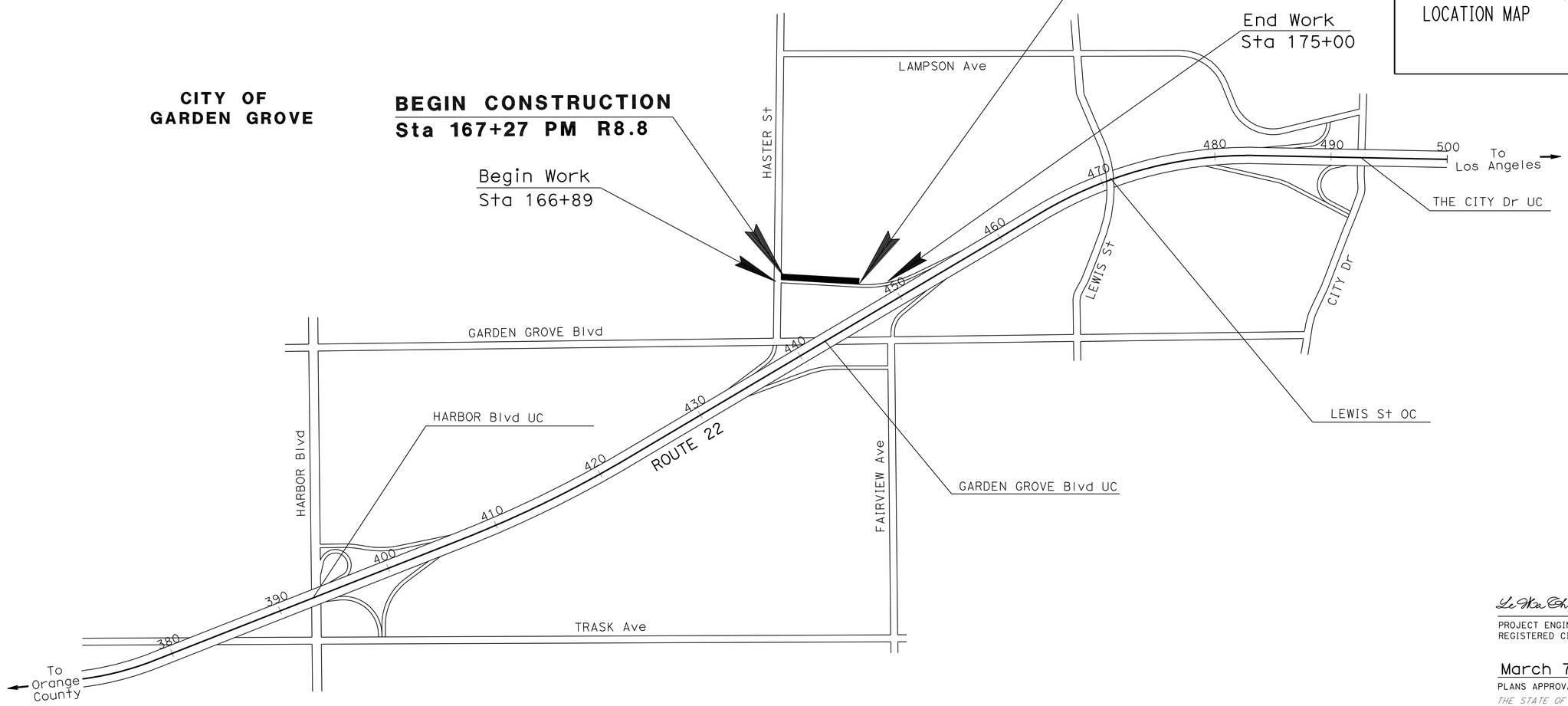


THE CONTRACTOR SHALL POSSESS THE CLASS (OR CLASSES) OF LICENSE AS SPECIFIED IN THE "NOTICE TO BIDDERS."

NO SCALE

Leha Tran 10-14-10
PROJECT ENGINEER REGISTERED CIVIL ENGINEER — DATE

March 7, 2011
PLANS APPROVAL DATE

REGISTERED PROFESSIONAL ENGINEER — LEHA TRAN — No. C49809 — Exp. 09-30-12 — CIVIL — STATE OF CALIFORNIA

*THE STATE OF CALIFORNIA OR ITS OFFICERS OR AGENTS SHALL NOT BE RESPONSIBLE FOR THE ACCURACY OR COMPLETENESS OF SCANNED COPIES OF THIS PLAN SHEET.*

| | |
|---|---|
| CONTRACT No. | 12-0K8904 |
| PROJECT ID | 1200000375 |

PROJECT MANAGER: BOB BARZAGAN
DESIGN ENGINEER: LEHA TRAN

LAST REVISION 10-11-10 — DATE PLOTTED => 01-APR-2011 — TIME PLOTTED => 05:56

| Dist | COUNTY | ROUTE | POST MILES TOTAL PROJECT | SHEET No. | TOTAL SHEETS |
|---|---|---|---|---|---|
| 12 | Ora | 22 | R8.8/R9.1 | 2 | 42 |

REGISTERED CIVIL ENGINEER 10-14-10 DATE

3-7-11
PLANS APPROVAL DATE

REGISTERED PROFESSIONAL ENGINEER
LEHA TRAN
No. C49809
Exp. 09-30-12
CIVIL
STATE OF CALIFORNIA

THE STATE OF CALIFORNIA OR ITS OFFICERS OR AGENTS SHALL NOT BE RESPONSIBLE FOR THE ACCURACY OR COMPLETENESS OF SCANNED COPIES OF THIS PLAN SHEET.

## PAVEMENT STRUCTURAL SECTION

1 — 0.85′ CONCRETE PAVEMENT (Ramp Termini)
0.25′ HMA Type "A"
0.60′ AS (Class 2)

2 — 0.20′ RHMA Type G
1.20′ HMA Type "A"
0.33′ AS (Class 2)

## EXISTING

3 — 0.85′ PCC
0.50′ LCB
0.35′ AS

4 — 0.60′ AC (TYPE A)
1.00′ AB
0.35′ AS

## ABBREVIATION

LCBRS - LEAN CONCRETE BASE RAPID SETTING

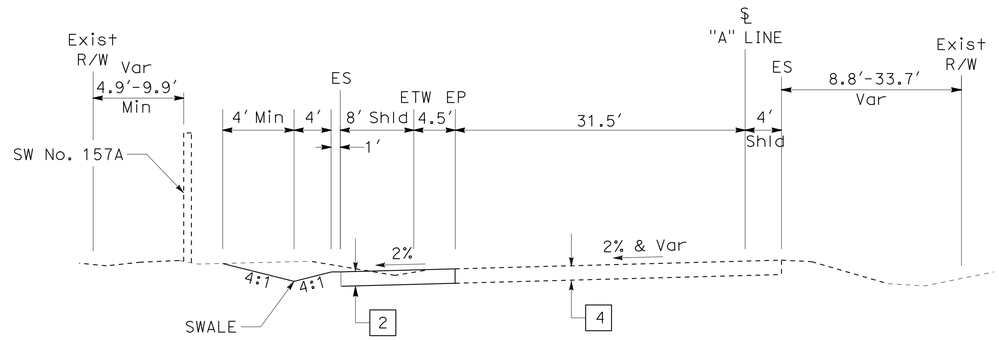


**"A" OFF-RAMP**

Sta 168+86.10 TO 172+26.00

* MVP AREA FROM:
Sta 170+00 TO 170+85

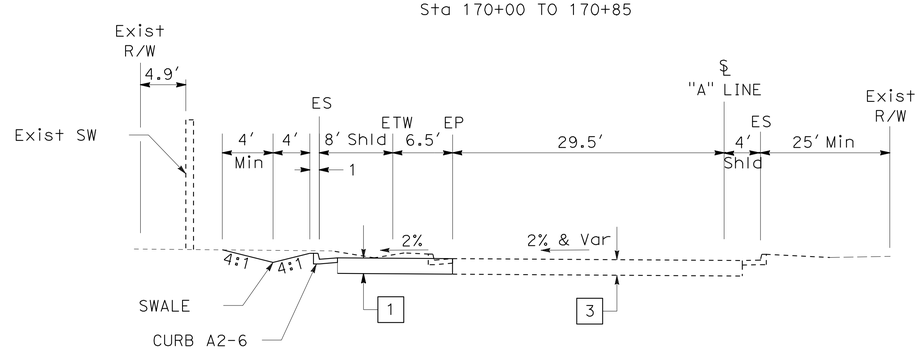


**"A" OFF-RAMP**

Sta 167+27.96 TO 168+86.10

# TYPICAL CROSS SECTIONS
## (HASTER STREET OFF-RAMP)

NO SCALE

X-1

STATE OF CALIFORNIA - DEPARTMENT OF TRANSPORTATION
Caltrans
DESIGN DIVISION

FUNCTIONAL SUPERVISOR: MILI LIM STAMATION
CALCULATED-DESIGNED BY: QUAN TRINH
CHECKED BY: LE-HA TRAN
REVISED BY
DATE REVISED

LAST REVISION 10-12-10
DATE PLOTTED => 07-MAR-2011
TIME PLOTTED => 14:06

| Dist | COUNTY | ROUTE | POST MILES TOTAL PROJECT | SHEET No. | TOTAL SHEETS |
|---|---|---|---|---|---|
| 12 | Ora | 22 | R8.8/R9.1 | 3 | 42 |

REGISTERED CIVIL ENGINEER 10-14-10 DATE

3-7-11
PLANS APPROVAL DATE

REGISTERED PROFESSIONAL ENGINEER LEHA TRAN No. C49809 Exp. 09-30-12 CIVIL STATE OF CALIFORNIA

*THE STATE OF CALIFORNIA OR ITS OFFICERS OR AGENTS SHALL NOT BE RESPONSIBLE FOR THE ACCURACY OR COMPLETENESS OF SCANNED COPIES OF THIS PLAN SHEET.*

NOTE:

1. FOR COMPLETE RIGHT OF WAY AND ACCURATE ACCESS DATA SEE RIGHT OF WAY RECORD MAPS AT DISTRICT OFFICE.

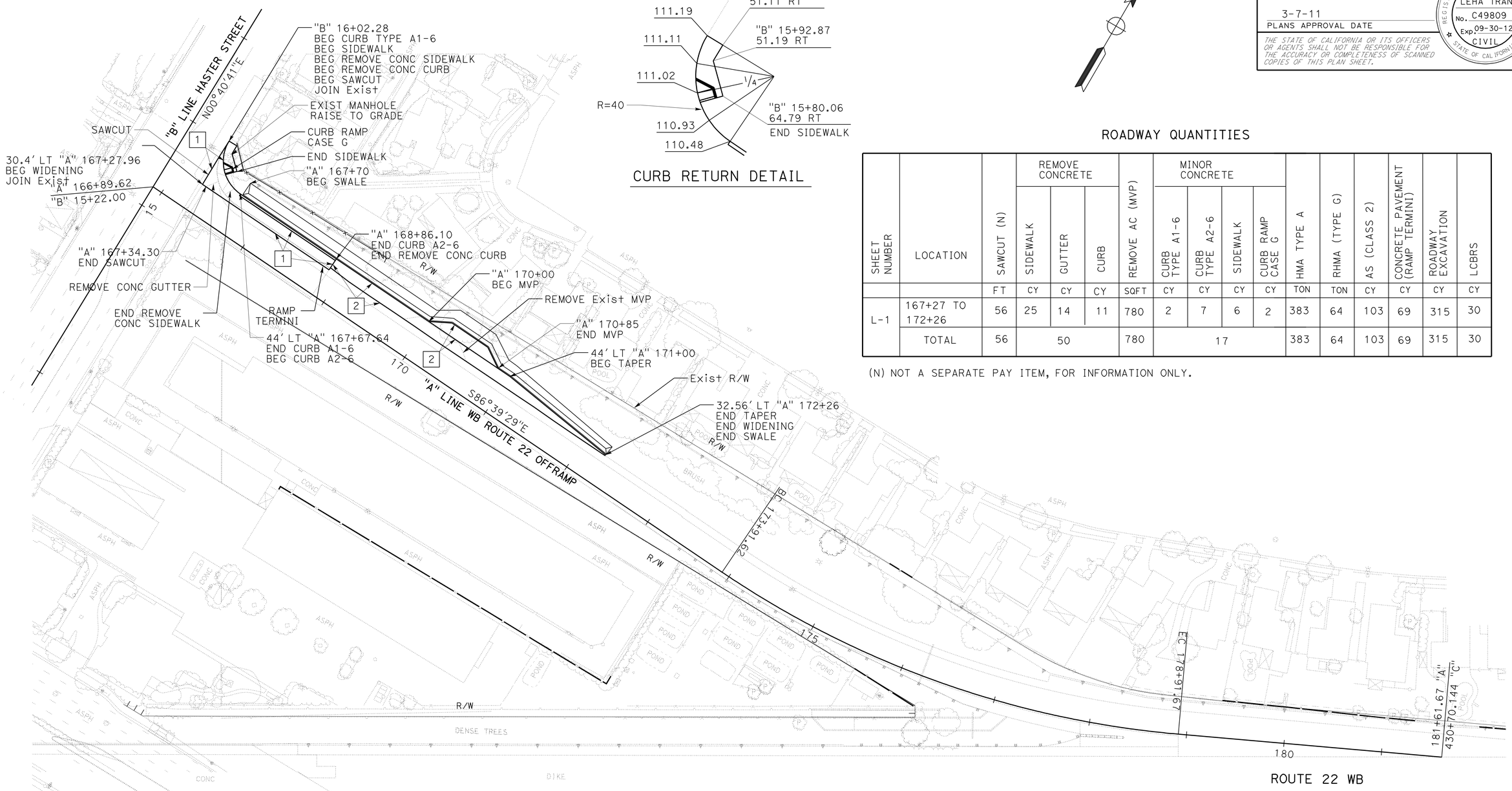


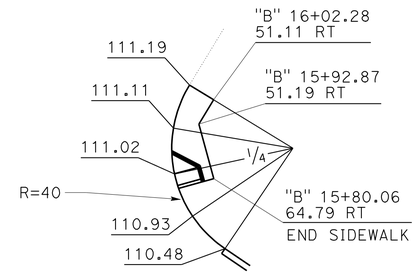


CURB RETURN DETAIL

## ROADWAY QUANTITIES

| SHEET NUMBER | LOCATION | SAWCUT (N) | REMOVE CONCRETE | | | REMOVE AC (MVP) | MINOR CONCRETE | | | | HMA TYPE A | RHMA (TYPE G) | AS (CLASS 2) | CONCRETE PAVEMENT (RAMP TERMINI) | ROADWAY EXCAVATION | LCBRS |
|---|---|---|---|---|---|---|---|---|---|---|---|---|---|---|---|---|
| | | | SIDEWALK | GUTTER | CURB | | CURB TYPE A1-6 | CURB TYPE A2-6 | SIDEWALK | CURB RAMP CASE G | | | | | | |
| | | FT | CY | CY | CY | SQFT | CY | CY | CY | CY | TON | TON | CY | CY | CY | CY |
| L-1 | 167+27 TO 172+26 | 56 | 25 | 14 | 11 | 780 | 2 | 7 | 6 | 2 | 383 | 64 | 103 | 69 | 315 | 30 |
| | TOTAL | 56 | 50 | | | 780 | 17 | | | | 383 | 64 | 103 | 69 | 315 | 30 |

(N) NOT A SEPARATE PAY ITEM, FOR INFORMATION ONLY.

# LAYOUT

SCALE: 1" = 50'

**L-1**

STATE OF CALIFORNIA - DEPARTMENT OF TRANSPORTATION
Caltrans® DESIGN DIVISION

FUNCTIONAL SUPERVISOR: MILI LIM STAMATION
CALCULATED-DESIGNED BY: QUAN TRINH
CHECKED BY: LE-HA TRAN
REVISED BY
DATE REVISED

LAST REVISION 10-12-10
DATE PLOTTED => 07-MAR-2011
TIME PLOTTED => 14:02

| Dist | COUNTY | ROUTE | POST MILES TOTAL PROJECT | SHEET No. | TOTAL SHEETS |
|---|---|---|---|---|---|
| 12 | Ora | 22 | R8.8/R9.1 | 4 | 42 |

Brandon Tran 10-14-10
REGISTERED CIVIL ENGINEER DATE

3-7-11
PLANS APPROVAL DATE

REGISTERED PROFESSIONAL ENGINEER
BRANDON TRAN
No. C58283
Exp. 06-30-12
CIVIL
STATE OF CALIFORNIA

*THE STATE OF CALIFORNIA OR ITS OFFICERS OR AGENTS SHALL NOT BE RESPONSIBLE FOR THE ACCURACY OR COMPLETENESS OF SCANNED COPIES OF THIS PLAN SHEET.*

## NOTE:

1. FOR COMPLETE RIGHT OF WAY AND ACCURATE ACCESS DATA SEE RIGHT OF WAY RECORD MAPS AT DISTRICT OFFICE.

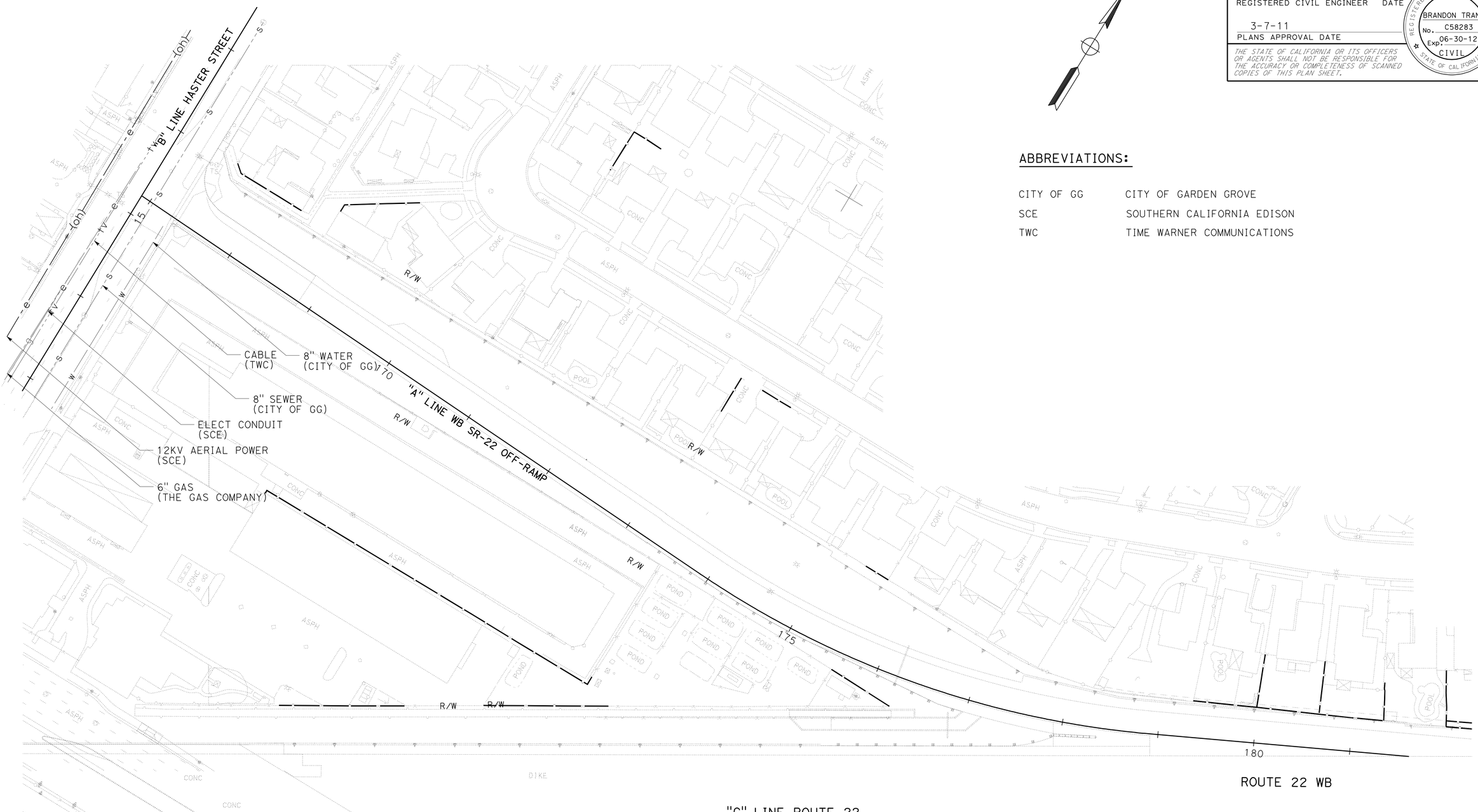


## ABBREVIATIONS:

| | |
|---|---|
| CITY OF GG | CITY OF GARDEN GROVE |
| SCE | SOUTHERN CALIFORNIA EDISON |
| TWC | TIME WARNER COMMUNICATIONS |

# UTILITY PLAN

SCALE: 1" = 50'

THIS PLAN ACCURATE FOR UTILITY INFORMATION ONLY

U-1

STATE OF CALIFORNIA - DEPARTMENT OF TRANSPORTATION
Caltrans DESIGN DIVISION

FUNCTIONAL SUPERVISOR: CHRISTOPHER LE
CALCULATED-DESIGNED BY: BRANDON TRAN
CHECKED BY: CHRISTOPHER LE
REVISED BY
DATE REVISED

LAST REVISION 10-12-10
DATE PLOTTED => 07-MAR-2011
TIME PLOTTED => 14:02

| Dist | COUNTY | ROUTE | POST MILES TOTAL PROJECT | SHEET No. | TOTAL SHEETS |
|---|---|---|---|---|---|
| 12 | Ora | 22 | R8.8/R9.1 | 5 | 42 |

REGISTERED CIVIL ENGINEER 10-14-10 DATE

3-7-11
PLANS APPROVAL DATE

REGISTERED PROFESSIONAL ENGINEER LEHA TRAN No. C49809 Exp. 09-30-12 CIVIL STATE OF CALIFORNIA

*THE STATE OF CALIFORNIA OR ITS OFFICERS OR AGENTS SHALL NOT BE RESPONSIBLE FOR THE ACCURACY OR COMPLETENESS OF SCANNED COPIES OF THIS PLAN SHEET.*

NOTE:

1. FOR COMPLETE RIGHT OF WAY AND ACCURATE ACCESS DATA SEE RIGHT OF WAY RECORD MAPS AT DISTRICT OFFICE.

## STATIONARY MOUNTED CONSTRUCTION AREA SIGNS

| SIGN No. | SIGN CODE | PANEL SIZE | SIGN MESSAGE | No. OF POSTS AND POST SIZE | No. OF SIGNS |
|---|---|---|---|---|---|
| A | W20-1 | 48" x 48" | ROAD WORK AHEAD | (1) - 4" x 6" | 2 |
| B | G20-2 | 60" x 24" | END ROAD WORK | (1) - 4" x 6" | 1 |
| C | W21-5a | 30" x 30" | RIGHT SHOULDER CLOSED | (1) - 4" x 6" | 1 |

## STAGE CONSTRUCTION QUANTITIES

| SHEET | TEMP RAILING (TYPE K) | TEMP TRAFFIC SCREEN | TEMP CRASH CUSHION ARRAY TS-14 | SURFACE MOUNTED CHANNELIZER | TYPE P MARKER (OM-3R (CA)) | TYPE R MARKER (OM-3C (CA)) |
|---|---|---|---|---|---|---|
| | LF | LF | EA | EA | EA | EA |
| SC-1 | 530 | 530 | 14 | 14 | 1 | 1 |
| TOTAL | 530 | 530 | 14 | 14 | 1 | 1 |

LEGEND:

- [X] CONSTRUCTION AREA SIGN
- CONSTRUCTION AREA SIGN, 1-POST
- CONSTRUCTION AREA

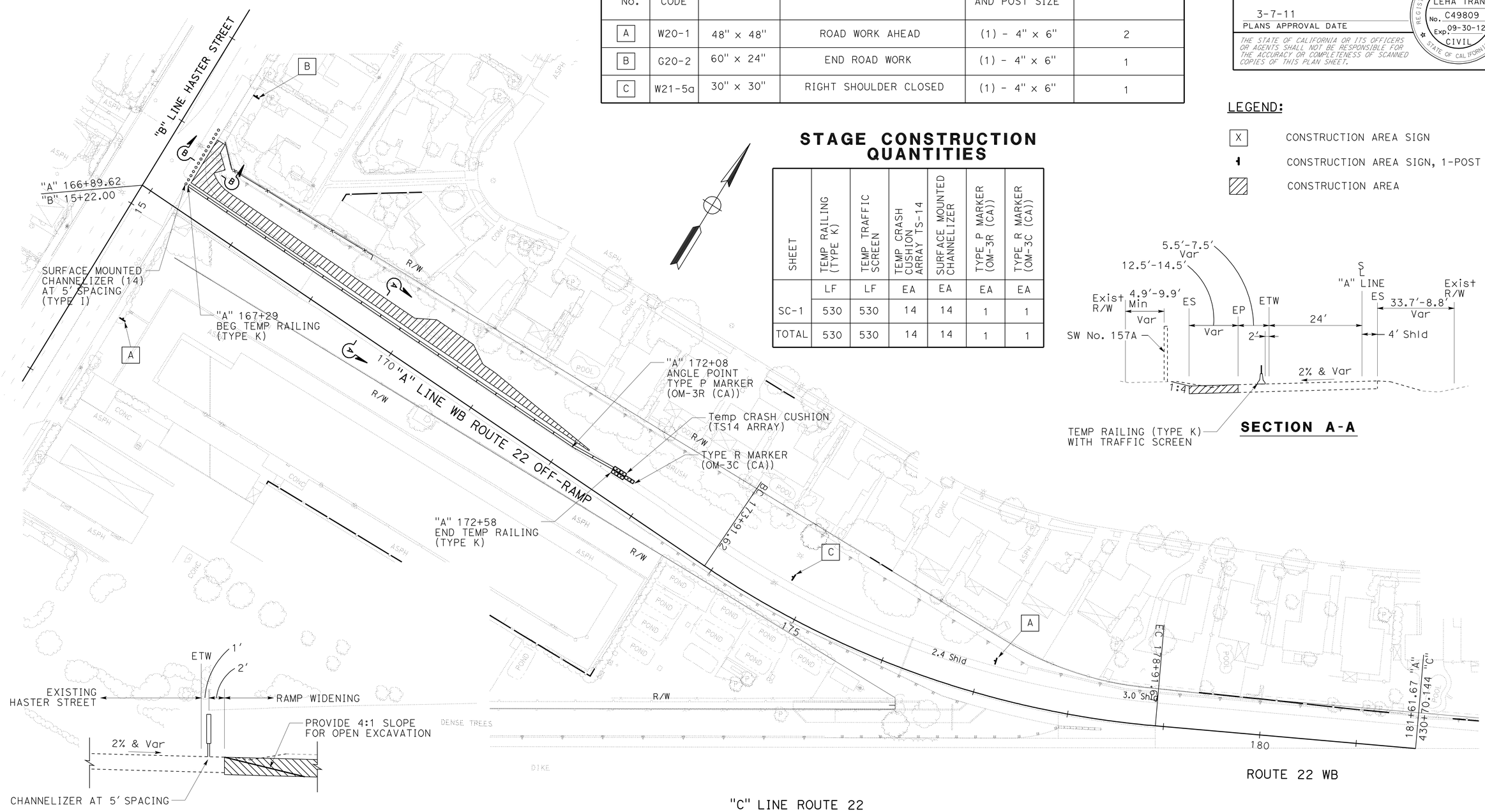





**SECTION A-A**




**SECTION B-B**

# STAGE CONSTRUCTION PLAN

SCALE: 1" = 50'

**SC-1**

STATE OF CALIFORNIA - DEPARTMENT OF TRANSPORTATION
Caltrans® DESIGN DIVISION

FUNCTIONAL SUPERVISOR: MILI LIM STAMATION
CALCULATED-DESIGNED BY: QUAN TRINH
CHECKED BY: LE-HA TRAN
REVISED BY
DATE REVISED

LAST REVISION 10-12-10
DATE PLOTTED => 07-MAR-2011
TIME PLOTTED => 14:02

| Dist | COUNTY | ROUTE | POST MILES TOTAL PROJECT | SHEET No. | TOTAL SHEETS |
|---|---|---|---|---|---|
| 12 | Ora | 22 | R8.8/R9.1 | 6 | 42 |

REGISTERED CIVIL ENGINEER 10-14-10 DATE

3-7-11
PLANS APPROVAL DATE

REGISTERED PROFESSIONAL ENGINEER LEHA TRAN No. C49809 Exp. 09-30-12 CIVIL STATE OF CALIFORNIA

*THE STATE OF CALIFORNIA OR ITS OFFICERS OR AGENTS SHALL NOT BE RESPONSIBLE FOR THE ACCURACY OR COMPLETENESS OF SCANNED COPIES OF THIS PLAN SHEET.*

## PORTABLE CONSTRUCTION DETOUR SIGNS

| SIGN No. | SIGN CODE | SIGN MESSAGE | PANEL SIZE (IN X IN) | No. OF POST AND SIZE (IN X IN) | No. OF SIGNS |
|---|---|---|---|---|---|
| A | M4-10 (RT) | Detour Arrow Rt | 48 x 18 | 1- 4 X 6 | 2 |
| | G28-2(CA) | State Route Marker | 30 X 32 | | |
| | M3-4 | WEST | 30 x 15 | | |
| B | SC3 (CA) | DETOUR (with arrow) | 48 x 18 | 1- 4 X 6 | 4 |
| | G28-2(CA) | State Route Marker | 30 x 32 | | |
| | M3-4 | WEST | 30 x 15 | | |
| C | M4-10 (LT) | Detour Arrow Lt | 48 x 18 | 1- 4 X 6 | 1 |
| | G28-2(CA) | State Route Marker | 30 x 32 | | |
| | M3-4 | WEST | 30 x 15 | | |
| D | SC6-3 (CA) | RAMP CLOSED | 48 x 48 | 1- 4 X 6 | 2 |
| E | M4-8a | END DETOUR | 30 x 18 | 1- 4 X 6 | 2 |
| F | SC3 (CA) | DETOUR (with arrow) | 48 x 18 | 1- 4 X 6 | 1 |
| | G7-1(CA) | HASTER St | 48 x 24 | | |
| G | M4-10 (RT) | Detour Arrow Rt | 48 x 18 | 1- 4 X 6 | 3 |
| | G7-1(CA) | HASTER St | 48 x 24 | | |
| H | R9-9 | SIDEWALK CLOSED AHEAD | 24 x 18 | TYPE III BARRICADE | 1 |
| I | R9-9 (Mod) | SIDEWALK CLOSED | 24 x 18 | TYPE III BARRICADE | 2 |

CLOSURE: WB ROUTE 22 HASTER St OFF-RAMP
DETOUR: EXIT HARBOR Blvd, TURN RIGHT ON HARBOR Blvd, TURN RIGHT ON GARDEN GROVE Blvd

CLOSURE: WB ROUTE 22 METROPOLITAN Dr ON-RAMP
DETOUR: 1. WB METROPOLITAN Dr TO LAMPSON Ave, TURN LEFT ON HASTER St TO WB ROUTE 22 ON-RAMP

2. EB METROPOLITAN Dr, TURN RIGHT ON CITY Dr, TURN RIGHT ON GARDEN GROVE Blvd TO WB ROUTE 22 ON-RAMP

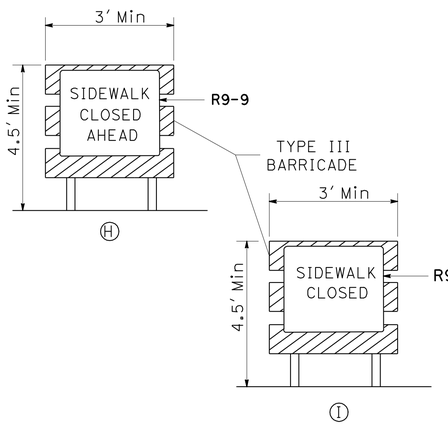


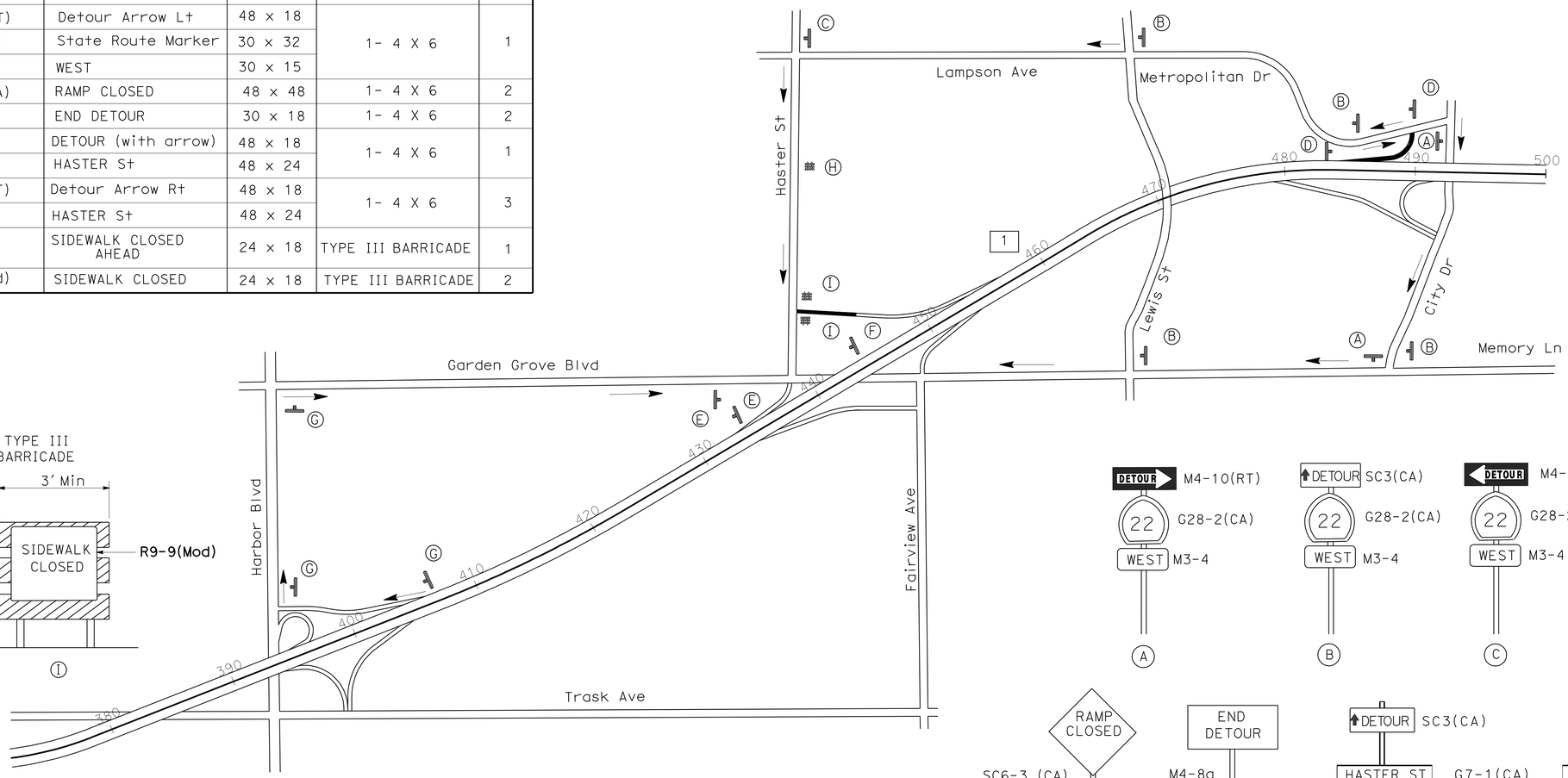


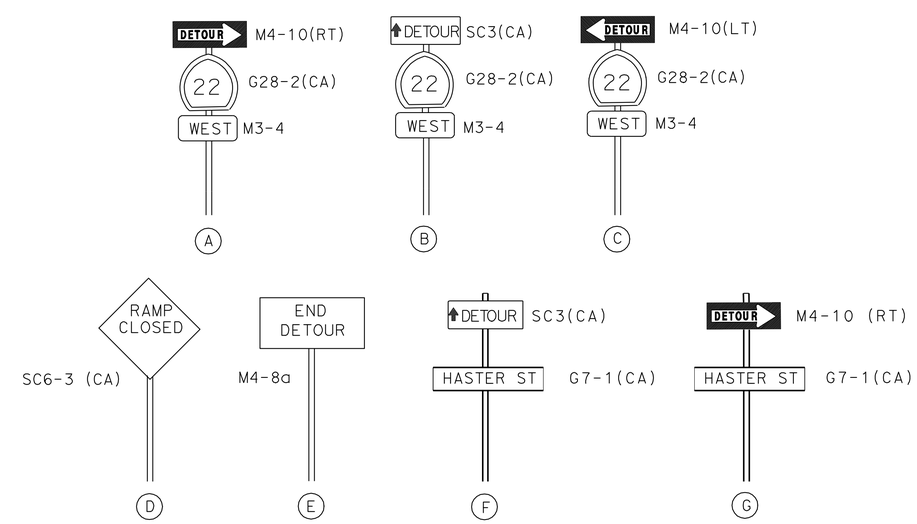


NOTE:

EXACT SIGN LOCATIONS TO BE DETERMINED BY THE ENGINEER AND PLACED WITHIN STATE R/W.

LEGENDS:

- DIRECTION OF TRAFFIC
- SIGN 1- POST
- (X) CONSTRUCTION DETOUR SIGN
- [X] PORTABLE CHANGEABLE MESSAGE SIGN
- TYPE III BARRICADE

## PORTABLE CHANGEABLE MESSAGE SIGN

| SIGN SYMBOL | SIGN MESSAGE(*) | No. OF SIGNS |
|---|---|---|
| 1 | HASTER St OFF-RAMP CLOSED<br>USE HARBOR Blvd OFF-RAMP | 1 |

(*) EXACT MESSAGE ON PCMS TO BE DETERMINED BY THE ENGINEER.

ABBREVIATION:

PCMS PORTABLE CHANGEABLE MESSAGE SIGN

# TRAFFIC HANDLING PLAN
## (DETOUR)

NO SCALE

TH-1

STATE OF CALIFORNIA - DEPARTMENT OF TRANSPORTATION
Caltrans DESIGN DIVISION

FUNCTIONAL SUPERVISOR: MILI LIM STAMATION
CALCULATED-DESIGNED BY: LE-HA TRAN
CHECKED BY: QUAN TRINH
REVISED BY
DATE REVISED

LAST REVISION 10-12-10
DATE PLOTTED => 07-MAR-2011
TIME PLOTTED => 14:03

| Dist | COUNTY | ROUTE | POST MILES TOTAL PROJECT | SHEET No. | TOTAL SHEETS |
|---|---|---|---|---|---|
| 12 | Ora | 22 | R8.8/R9.1 | 7 | 42 |

REGISTERED CIVIL ENGINEER 10-14-10 DATE

3-7-11
PLANS APPROVAL DATE

REGISTERED PROFESSIONAL ENGINEER LEHA TRAN No. C49809 Exp. 09-30-12 CIVIL STATE OF CALIFORNIA

*THE STATE OF CALIFORNIA OR ITS OFFICERS OR AGENTS SHALL NOT BE RESPONSIBLE FOR THE ACCURACY OR COMPLETENESS OF SCANNED COPIES OF THIS PLAN SHEET.*

## NOTES:

1. ALL CONFLICTING TRAFFIC STRIPE AND PAVEMENT MARKING SHALL BE REMOVED.
2. ALL TRAFFIC STRIPES AND PAVEMENT MARKINGS SHALL BE THERMOPLASTIC UNLESS OTHERWISE NOTED.

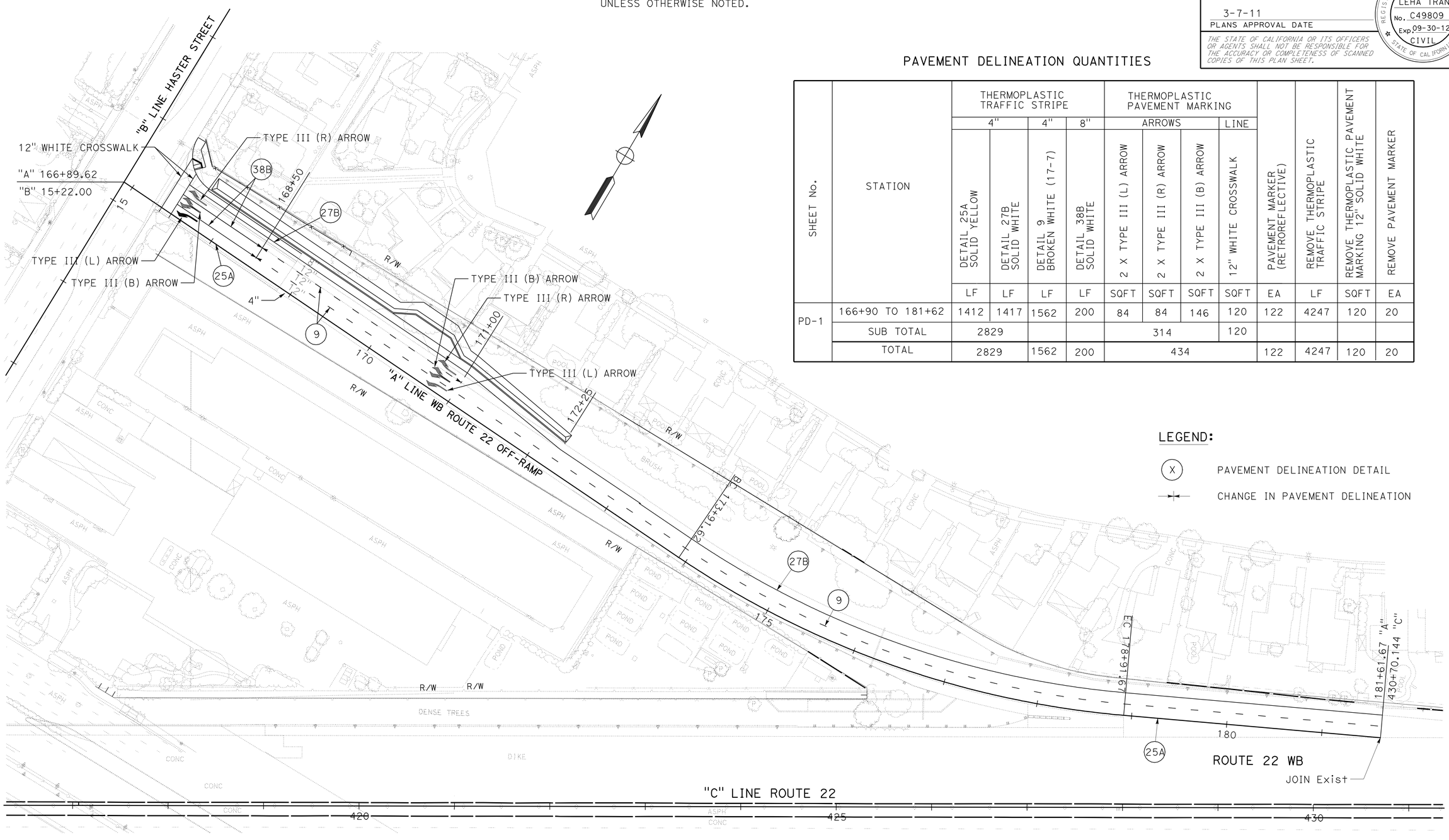


## PAVEMENT DELINEATION QUANTITIES

| SHEET No. | STATION | THERMOPLASTIC TRAFFIC STRIPE 4" DETAIL 25A SOLID YELLOW | THERMOPLASTIC TRAFFIC STRIPE 4" DETAIL 27B SOLID WHITE | THERMOPLASTIC TRAFFIC STRIPE 4" DETAIL 9 BROKEN WHITE (17-7) | THERMOPLASTIC TRAFFIC STRIPE 8" DETAIL 38B SOLID WHITE | THERMOPLASTIC PAVEMENT MARKING ARROWS 2 X TYPE III (L) ARROW | THERMOPLASTIC PAVEMENT MARKING ARROWS 2 X TYPE III (R) ARROW | THERMOPLASTIC PAVEMENT MARKING ARROWS 2 X TYPE III (B) ARROW | THERMOPLASTIC PAVEMENT MARKING LINE 12" WHITE CROSSWALK | PAVEMENT MARKER (RETROREFLECTIVE) | REMOVE THERMOPLASTIC TRAFFIC STRIPE | REMOVE THERMOPLASTIC PAVEMENT MARKING 12" SOLID WHITE | REMOVE PAVEMENT MARKER |
|---|---|---|---|---|---|---|---|---|---|---|---|---|---|
| | | LF | LF | LF | LF | SQFT | SQFT | SQFT | SQFT | EA | LF | SQFT | EA |
| PD-1 | 166+90 TO 181+62 | 1412 | 1417 | 1562 | 200 | 84 | 84 | 146 | 120 | 122 | 4247 | 120 | 20 |
| | SUB TOTAL | 2829 | | | | 314 | | | 120 | | | | |
| | TOTAL | 2829 | | 1562 | 200 | 434 | | | | 122 | 4247 | 120 | 20 |

## LEGEND:

(X) PAVEMENT DELINEATION DETAIL

CHANGE IN PAVEMENT DELINEATION

# PAVEMENT DELINEATION PLAN

SCALE: 1" = 50'

**PD-1**

| REVISED BY | DATE REVISED |
|---|---|
| QUAN TRINH | LE-HA TRAN |
| CALCULATED-DESIGNED BY | CHECKED BY |
| FUNCTIONAL SUPERVISOR | MILI LIM STAMATION |

STATE OF CALIFORNIA - DEPARTMENT OF TRANSPORTATION
Caltrans® DESIGN DIVISION

LAST REVISION 10-12-10 | DATE PLOTTED => 07-MAR-2011 | TIME PLOTTED => 14:03

| Dist | COUNTY | ROUTE | POST MILES TOTAL PROJECT | SHEET No. | TOTAL SHEETS |
|---|---|---|---|---|---|
| 12 | Ora | 22 | R8.8/R9.1 | 8 | 42 |

REGISTERED CIVIL ENGINEER 10-14-10 DATE

3-7-11
PLANS APPROVAL DATE

REGISTERED PROFESSIONAL ENGINEER
LEHA TRAN
No. C49809
Exp. 09-30-12
CIVIL
STATE OF CALIFORNIA

*THE STATE OF CALIFORNIA OR ITS OFFICERS OR AGENTS SHALL NOT BE RESPONSIBLE FOR THE ACCURACY OR COMPLETENESS OF SCANNED COPIES OF THIS PLAN SHEET.*

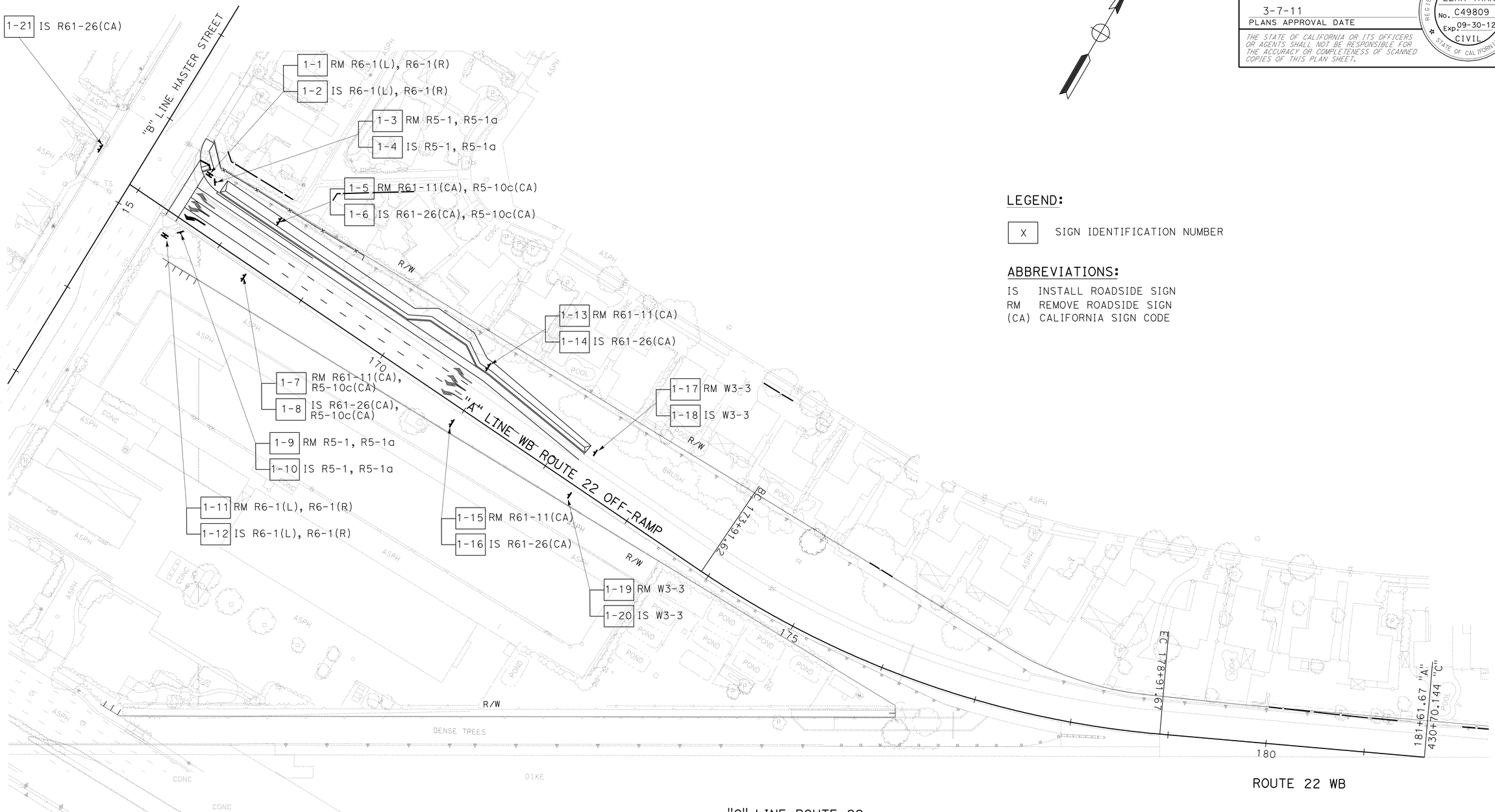


## LEGEND:

| | |
|---|---|
| X | SIGN IDENTIFICATION NUMBER |

## ABBREVIATIONS:

IS INSTALL ROADSIDE SIGN
RM REMOVE ROADSIDE SIGN
(CA) CALIFORNIA SIGN CODE

# SIGN PLAN

SCALE: 1" = 50'

**S-1**

STATE OF CALIFORNIA - DEPARTMENT OF TRANSPORTATION
Caltrans® DESIGN DIVISION

FUNCTIONAL SUPERVISOR: MILI LIM STAMATION
CALCULATED-DESIGNED BY: QUAN TRINH
CHECKED BY: LE-HA TRAN
REVISED BY
DATE REVISED

LAST REVISION 10-12-10
DATE PLOTTED => 07-MAR-2011
TIME PLOTTED => 14:03

| Dist | COUNTY | ROUTE | POST MILES TOTAL PROJECT | SHEET No. | TOTAL SHEETS |
|---|---|---|---|---|---|
| 12 | Ora | 22 | R8.8/R9.1 | 9 | 42 |

REGISTERED CIVIL ENGINEER 10-14-10 DATE

3-7-11
PLANS APPROVAL DATE

REGISTERED PROFESSIONAL ENGINEER LEHA TRAN No. C49809 Exp. 09-30-12 CIVIL STATE OF CALIFORNIA

*THE STATE OF CALIFORNIA OR ITS OFFICERS OR AGENTS SHALL NOT BE RESPONSIBLE FOR THE ACCURACY OR COMPLETENESS OF SCANNED COPIES OF THIS PLAN SHEET.*

# ROADSIDE SIGNS

| SHEET NUMBER | SIGN No. ⬡ | CODE | PANEL SIZE | POST SIZE & LENGTH (N) 4" X 4" | POST SIZE & LENGTH (N) 6" X 6" | INSTALL ROADSIDE SIGN ONE POST | INSTALL ROADSIDE SIGN TWO POST | REMOVE ROADSIDE SIGN ONE POST |
|---|---|---|---|---|---|---|---|---|
| | | | IN | LF | LF | EA | EA | EA |
| PD-1 | 1-1 | R6-1(L) | EXISTING | | | | | 1 |
| | | R6-1(R) | | | | | | |
| | 1-2 | R6-1(L) | 36 x 12 | 6 | | 1 | | |
| | | R6-1(R) | | | | | | |
| | 1-3 | R5-1 | EXISTING | | | | | 1 |
| | | R5-1a | | | | | | |
| | 1-4 | R5-1 | 36 x 36 | | 12 | 1 | | |
| | | R5-1a | 36 x 24 | | | | | |
| | 1-5 | R61-11(CA) | EXISTING | | | | | 1 |
| | | R5-10c(CA) | | | | | | |
| | 1-6 | R61-26(CA) | 72 X 45 | | 16 | | 1 | |
| | | R5-10c(CA) | 24 X 12 | | | | | |
| | 1-7 | R61-11(CA) | EXISTING | | | | | 1 |
| | | R5-10c(CA) | | | | | | |
| | 1-8 | R61-26(CA) | 72 X 45 | | 16 | | 1 | |
| | | R5-10c(CA) | 24 X 12 | | | | | |
| | 1-9 | R5-1 | EXISTING | | | | | 1 |
| | | R5-1a | | | | | | |
| | 1-10 | R5-1 | 36 x 36 | | 12 | 1 | | |
| | | R5-1a | 36 x 24 | | | | | |
| | 1-11 | R6-1(L) | EXISTING | | | | | 1 |
| | | R6-1(R) | | | | | | |
| | 1-12 | R6-1(L) | 36 x 12 | 6 | | 1 | | |
| | | R6-1(R) | | | | | | |
| | 1-13 | R61-11 (CA) | EXISTING | | | | | 1 |
| | 1-14 | R61-26 (CA) | 72 X 45 | | 16 | | 1 | |
| | 1-15 | R61-11 (CA) | EXISTING | | | | | 1 |
| | 1-16 | R61-26 (CA) | 72 X 45 | | 16 | | 1 | |
| | 1-17 | W3-3 | EXISTING | | | | | 1 |
| | 1-18 | W3-3 | 48 x 48 | | 16 | 1 | | |
| | 1-19 | W3-3 | EXISTING | | | | | 1 |
| | 1-20 | W3-3 | 48 x 48 | | 16 | 1 | | |
| | 1-21 | R61-26 (CA) | 72 X 45 | | 16 | | 1 | |
| | * | R9-3A | 18 x 18 | | | 1 | | |
| | * | R9-3B | 18 x 12 | | | 1 | | |
| | TOTAL | | | | | 8 | 5 | 10 |

* SEE ELEC. PLAN
(N) = NOT A SEPARATE PAY ITEM, FOR INFORMATION ONLY

## ABBREVIATIONS:

Blk = BLACK
B = BLUE
G = GREEN
R = RED
W = WHITE
Y = YELLOW
non = Non-Reflective

## LEGEND:

◇ WHITE DIAMOND SYMBOL ON BLACK BACKGROUND

# MATERIAL SUMMARY (CONTRACTOR FURNISHED SIGNS)

| SIGN No. | SIGN CODE | SIGN PANEL DIMENSION (L x H) | SINGLE FACED | SIGN FACING MATERIAL: BACKGROUND SHEETING COLOR | BACKGROUND RETROREFLECTIVE ASTM TYPE | LEGEND SHEETING COLOR | LEGEND RETROREFLECTIVE ASTM TYPE | ROADSIDE: FURNISH SINGLE SHEET ALUMINUM SIGN 0.063" UNFRAMED | 0.080" UNFRAMED |
|---|---|---|---|---|---|---|---|---|---|
| | | inch x inch | | | | | | SQFT | SQFT |
| 2, 12 | R6-1(L) | 36 x 12 | X | W | IV | Blk | non | 6.0 | |
| | R6-1(R) | 36 x 12 | X | W | IV | Blk | non | 6.0 | |
| 4, 10 | R5-1 | 36 x 36 | X | R | IV | W | IV | 18.0 | |
| | R5-1a | 36 x 24 | X | R | IV | W | IV | 12.0 | |
| 6,8,14,16,21 | R61-26(CA) | 72 x 45 | X | W | IV | Blk | non | | 112.5 |
| 6, 8 | R5-10c(CA) | 24 x 12 | X | W | IV | Blk | IX | 4.0 | |
| 18, 20 | W3-3 | 48 x 48 | X | Y | IV | Blk | non | | 32.0 |
| | R9-3A | 18 x 18 | X | W | IV | Blk | non | 2.5 | |
| | R9-3B | 18 x 12 | X | W | IV | Blk | non | 1.5 | |
| TOTAL | | | | | | | | 50.0 | 144.5 |

# SIGN QUANTITIES

## SQ-1

STATE OF CALIFORNIA - DEPARTMENT OF TRANSPORTATION
Caltrans® DESIGN DIVISION

FUNCTIONAL SUPERVISOR: MILI LIM STAMATION
CALCULATED-DESIGNED BY: QUAN TRINH
CHECKED BY: LE-HA TRAN
REVISED BY
DATE REVISED

LAST REVISION 10-12-10
DATE PLOTTED => 07-MAR-2011
TIME PLOTTED => 13:57

| Dist | COUNTY | ROUTE | POST MILES TOTAL PROJECT | SHEET No. | TOTAL SHEETS |
|---|---|---|---|---|---|
| 12 | Ora | 22 | R8.8/R9.1 | 10 | 42 |

01-12-11
LICENSED LANDSCAPE ARCHITECT

3-7-11
PLANS APPROVAL DATE

LICENSED LANDSCAPE ARCHITECT
MATTHEW J CASLAVKA
Signature
10-31-11
Renewal Date
01-12-11
Date
STATE OF CALIFORNIA

*THE STATE OF CALIFORNIA OR ITS OFFICERS OR AGENTS SHALL NOT BE RESPONSIBLE FOR THE ACCURACY OR COMPLETENESS OF SCANNED COPIES OF THIS PLAN SHEET.*

# PLANT LIST AND PLANT SPECIFICATIONS

| PLANT GROUP | PLANT No. | SYMBOL | BOTANICAL NAME | COMMON NAME | SIZE | QUANTITY EACH | HOLE SIZE (INCH) Dia | HOLE SIZE (INCH) DEPTH | BASIN TYPE | IRON SULFATE ① | SOIL AMEND ① | COMMERCIAL FERTILIZER ① PLANTING | COMMERCIAL FERTILIZER ① PLT ESTB | BASIN MULCH | STAKING | PLANTING LIMITS MINIMUM DISTANCE (Ft) FROM TRVD WAY | PVMT | FENCE | WALL | PAVED DITCH | EARTH DITCH | ON CENTER (Ft) | REMARKS |
|---|---|---|---|---|---|---|---|---|---|---|---|---|---|---|---|---|---|---|---|---|---|---|---|
| B | 1 | ◉ | JUNIPERUS CHINENSIS TORULOSA | HOLLYWOOD JUNIPER | No.5 | 6 | ② | ② | 2 | - | - | 1 PKT | 1 PKT | 0.02 CY | X | - | 10 | 10 | 10 | 10 | 10 | - | SHRUB |
| H | 2 | | CARPOBROTUS EDULIS | HOTTENTOT FIG | CUTTING | 2724 | ⑧ | ⑧ | - | - | - | 8.0 lb/ 100 SQYD | 8.0 lb/ 100 SQYD | - | - | - | 6 | 6 | 6 | 6 | 8 | 1.5 | GROUNDCOVER |
| F | 3 | | MYOPORUM PARVIFOLIUM | MYOPORUM | FLAT | 2864 | ⑧ | ⑧ | - | - | - | 8.0 lb/ 100 SQYD | 8.0 lb/ 100 SQYD | - | - | - | 6 | 6 | 6 | 6 | 8 | 1.5 | GROUNDCOVER |
| | | ○ | WASHINGTONIA ROBUSTA (EXISTING) | MEXICAN FAN PALM (EXISTING) | - | 3 | ⑥ | ⑥ | ⑥ | - | - | 3 PKT | 3 PKT | ⑥ | - | 30 | 10 | 10 | 10 | 10 | 10 | 1.5 | TRANSPLANT SEE DETAIL |

REMOVE EXISTING PLANTED AREA

MAINTAIN EXISTING PLANTED AREAS

EXISTING TREES TO BE MAINTAINED

**APPLICABLE WHEN CIRCLED:**

① - Quantities shown are "per plant" unless shown as SQFT or SQYD application rates.
② - Sufficient to receive root ball.
3 - Does not apply to mulch areas.
4 - As shown on plans.
5 - Unless otherwise shown on plans.
⑥ - See detail.
7 - See Special Provisions.
⑧ - See Standard Specifications

## ABBREVIATIONS

AMEND — amendment
B & B — balled and burlapped
BTH — brown trunk heigth
Dia — diameter
EA — each
lb — pound
oz. — ounce
Ft — foot/feet
SQFT — square feet
CF — cubic feet
Max — maximum
Min — minimum
NCN — no common name
No. — number
Pkt — packet
PLT ESTB — plant establishment
Pvmt — pavement
R/W — right of way
SF — state furnished
TRVD — traveled
SQYD — square yard

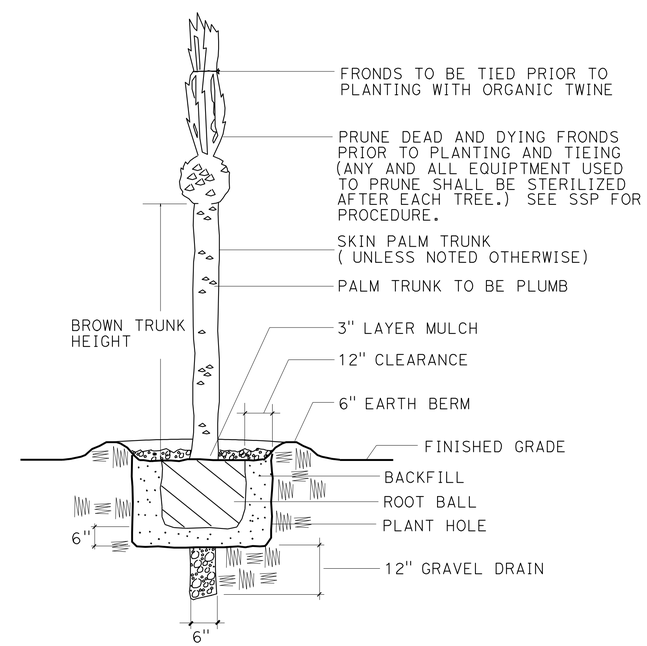


**PALM TREE PLANTING DETAIL**

# PLANT LIST

NO SCALE

**PL-1**

REVISED BY | DATE REVISED
LANDON MARES | MATTHEW J CASLAVKA
CALCULATED-DESIGNED BY | CHECKED BY
SENIOR LANDSCAPE ARCHITECT | ERIC DICKSON
STATE OF CALIFORNIA - DEPARTMENT OF TRANSPORTATION
Caltrans® LANDSCAPE ARCHITECTURE

LAST REVISION 01-12-11 | DATE PLOTTED => 08-MAR-2011 | TIME PLOTTED => 12:36

| Dist | COUNTY | ROUTE | POST MILES TOTAL PROJECT | SHEET No. | TOTAL SHEETS |
|---|---|---|---|---|---|
| 12 | Ora | 22 | R8.8/R9.1 | 11 | 42 |

10-14-10
LICENSED LANDSCAPE ARCHITECT

3-7-11
PLANS APPROVAL DATE

LICENSED LANDSCAPE ARCHITECT
MATTHEW J CASLAVKA
Signature
10-31-11
Renewal Date
10-14-10
Date
STATE OF CALIFORNIA

*THE STATE OF CALIFORNIA OR ITS OFFICERS OR AGENTS SHALL NOT BE RESPONSIBLE FOR THE ACCURACY OR COMPLETENESS OF SCANNED COPIES OF THIS PLAN SHEET.*

**NOTE:**

FOR ACCURATE RIGHT OF WAY AND ACCESS DATA,
CONTACT RIGHT OF WAY ENGINEERING AT THE DISTRICT OFFICE.

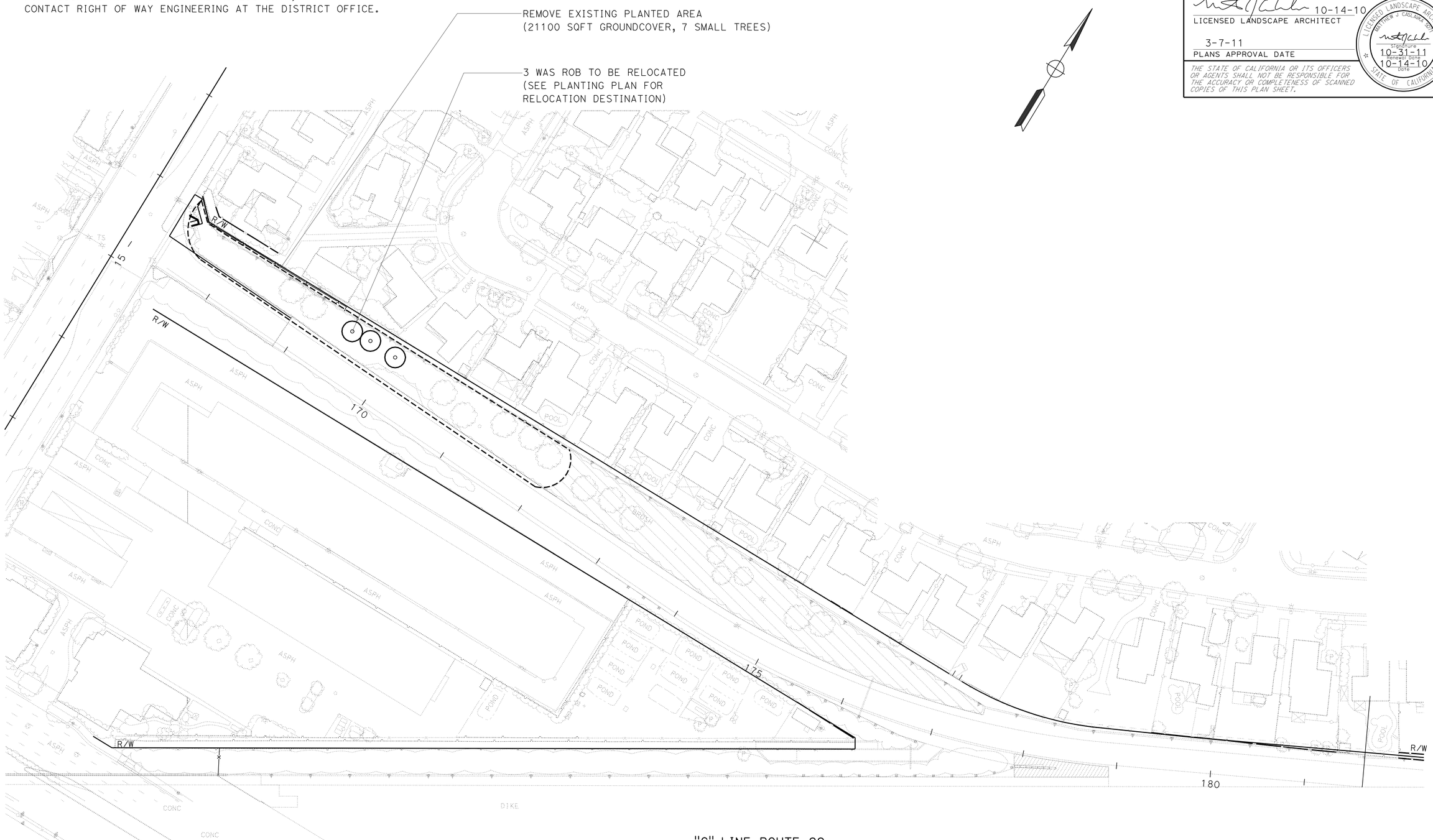


# PLANT REMOVAL PLAN

SCALE: 1" = 50'

**PR-1**

THIS PLAN IS ACCURATE FOR PLANT REMOVAL WORK ONLY.

STATE OF CALIFORNIA - DEPARTMENT OF TRANSPORTATION
Caltrans®
LANDSCAPE ARCHITECTURE

SENIOR LANDSCAPE ARCHITECT: ERIC DICKSON
CALCULATED-DESIGNED BY: LANDON MARES
CHECKED BY: MATTHEW J CASLAVKA
REVISED BY
DATE REVISED

LAST REVISION: DATE PLOTTED => 08-MAR-2011
10-12-10 TIME PLOTTED => 12:36

| Dist | COUNTY | ROUTE | POST MILES TOTAL PROJECT | SHEET No. | TOTAL SHEETS |
|---|---|---|---|---|---|
| 12 | Ora | 22 | R8.8/R9.1 | 12 | 42 |

10-14-10
LICENSED LANDSCAPE ARCHITECT

3-7-11
PLANS APPROVAL DATE

*THE STATE OF CALIFORNIA OR ITS OFFICERS OR AGENTS SHALL NOT BE RESPONSIBLE FOR THE ACCURACY OR COMPLETENESS OF SCANNED COPIES OF THIS PLAN SHEET.*

LICENSED LANDSCAPE ARCHITECT
MATTHEW J CASLAVKA 4871
signature
10-31-11
renewal date
10-14-10
date
STATE OF CALIFORNIA

**NOTE:**

FOR ACCURATE RIGHT OF WAY AND ACCESS DATA,
CONTACT RIGHT OF WAY ENGINEERING AT THE DISTRICT OFFICE.

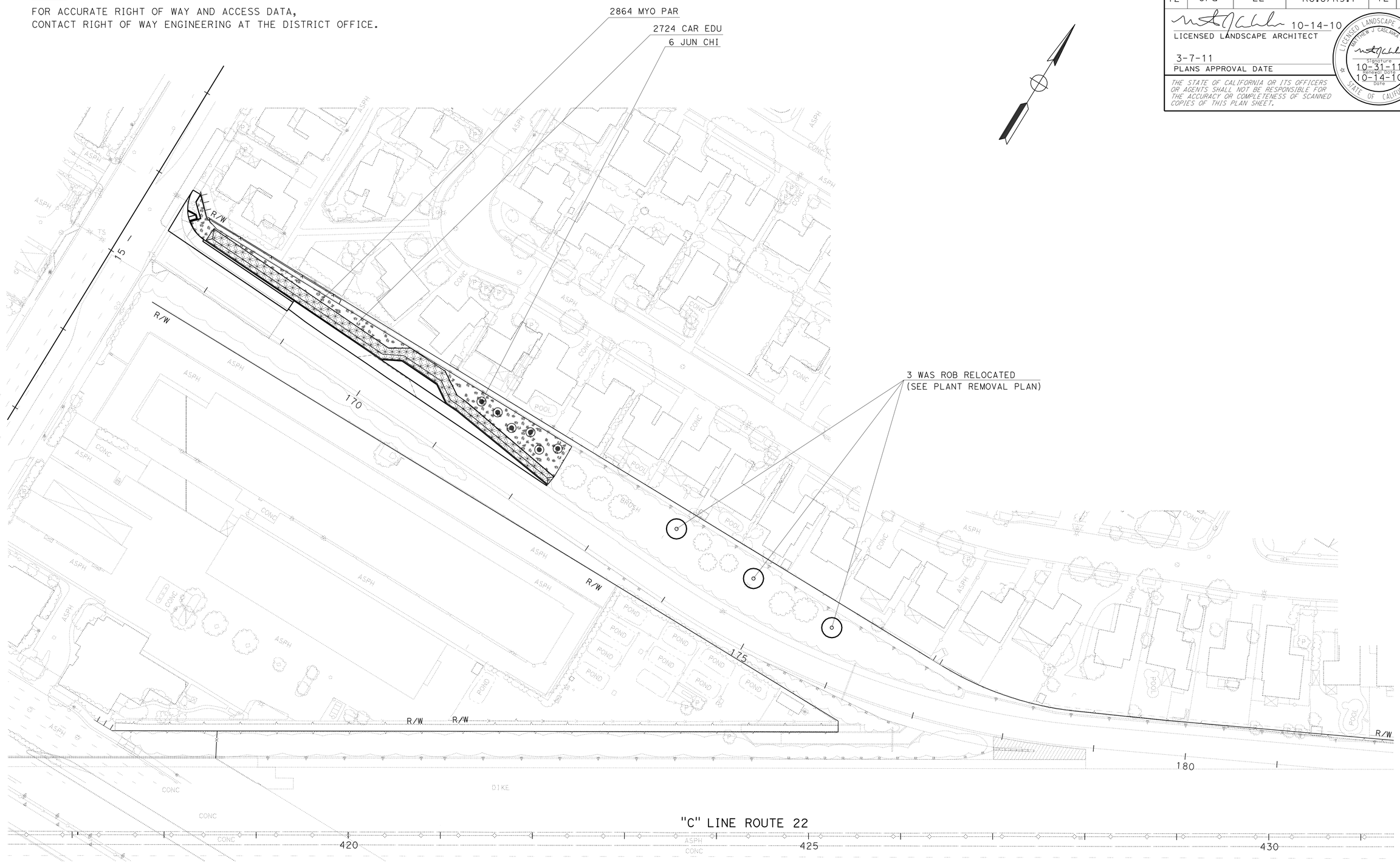


# PLANTING PLAN

SCALE 1" = 50'

**PP-1**

THIS PLAN IS ACCURATE FOR PLANTING WORK ONLY.

STATE OF CALIFORNIA - DEPARTMENT OF TRANSPORTATION
Caltrans® LANDSCAPE ARCHITECTURE

SENIOR LANDSCAPE ARCHITECT: ERIC DICKSON
CALCULATED-DESIGNED BY: LANDON MARES
CHECKED BY: MATTHEW J CASLAVKA
REVISED BY
DATE REVISED

LAST REVISION 10-12-10
DATE PLOTTED => 08-MAR-2011
TIME PLOTTED => 12:37

| Dist | COUNTY | ROUTE | POST MILES TOTAL PROJECT | SHEET No. | TOTAL SHEETS |
|---|---|---|---|---|---|
| 12 | Ora | 22 | R8.8/R9.1 | 13 | 42 |

10-14-10
LICENSED LANDSCAPE ARCHITECT

3-7-11
PLANS APPROVAL DATE

*THE STATE OF CALIFORNIA OR ITS OFFICERS OR AGENTS SHALL NOT BE RESPONSIBLE FOR THE ACCURACY OR COMPLETENESS OF SCANNED COPIES OF THIS PLAN SHEET.*

LICENSED LANDSCAPE ARCHITECT
MATTHEW J CASLAVKA 5671
Signature
10-31-11
Renewal date
10-14-10
Date
STATE OF CALIFORNIA

**NOTE:**

FOR ACCURATE RIGHT OF WAY AND ACCESS DATA,
CONTACT RIGHT OF WAY ENGINEERING AT THE DISTRICT OFFICE.

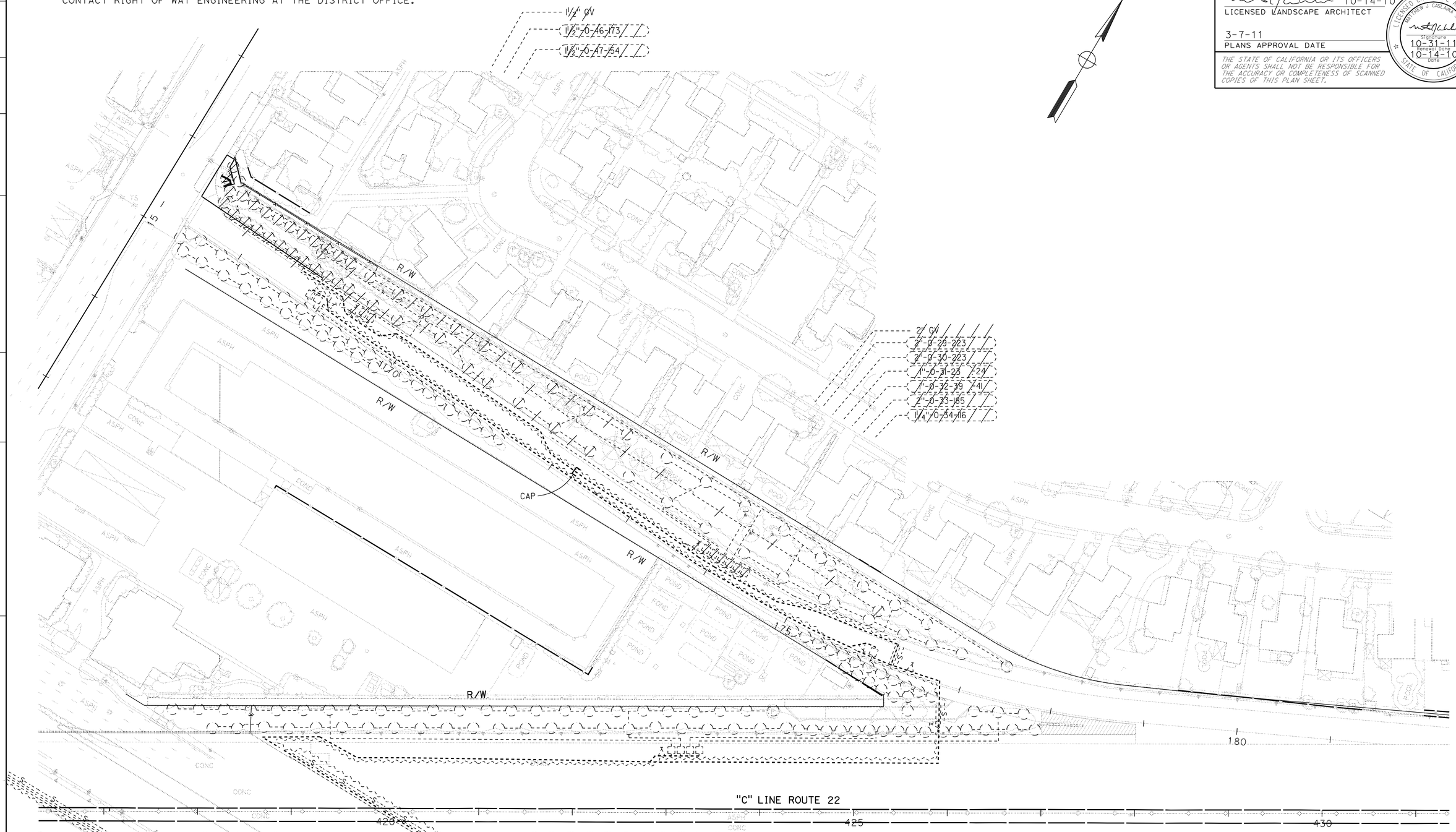


# IRRIGATION REMOVAL AND EXISTING IRRIGATION PLAN

SCALE: 1" = 50'

**IR-1**

THIS PLAN IS ACCURATE FOR IRRIGATION REMOVAL WORK ONLY.

STATE OF CALIFORNIA - DEPARTMENT OF TRANSPORTATION
Caltrans® LANDSCAPE ARCHITECTURE

SENIOR LANDSCAPE ARCHITECT: ERIC DICKSON

CALCULATED-DESIGNED BY: LANDON MARES
CHECKED BY: MATTHEW J CASLAVKA

REVISED BY
DATE REVISED

LAST REVISION 10-12-00
DATE PLOTTED => 08-MAR-2011
TIME PLOTTED => 12:37

| Dist | COUNTY | ROUTE | POST MILES TOTAL PROJECT | SHEET No. | TOTAL SHEETS |
|---|---|---|---|---|---|
| 12 | Ora | 22 | R8.8/R9.1 | 14 | 42 |

10-14-10
LICENSED LANDSCAPE ARCHITECT

3-7-11
PLANS APPROVAL DATE

LICENSED LANDSCAPE ARCHITECT
MATTHEW J CASLAVKA
Signature
10-31-11
Renewal Date
10-14-10
Date
STATE OF CALIFORNIA

*THE STATE OF CALIFORNIA OR ITS OFFICERS OR AGENTS SHALL NOT BE RESPONSIBLE FOR THE ACCURACY OR COMPLETENESS OF SCANNED COPIES OF THIS PLAN SHEET.*

**NOTE:**

· FOR ACCURATE RIGHT OF WAY AND ACCESS DATA, CONTACT RIGHT OF WAY ENGINEERING AT THE DISTRICT OFFICE.

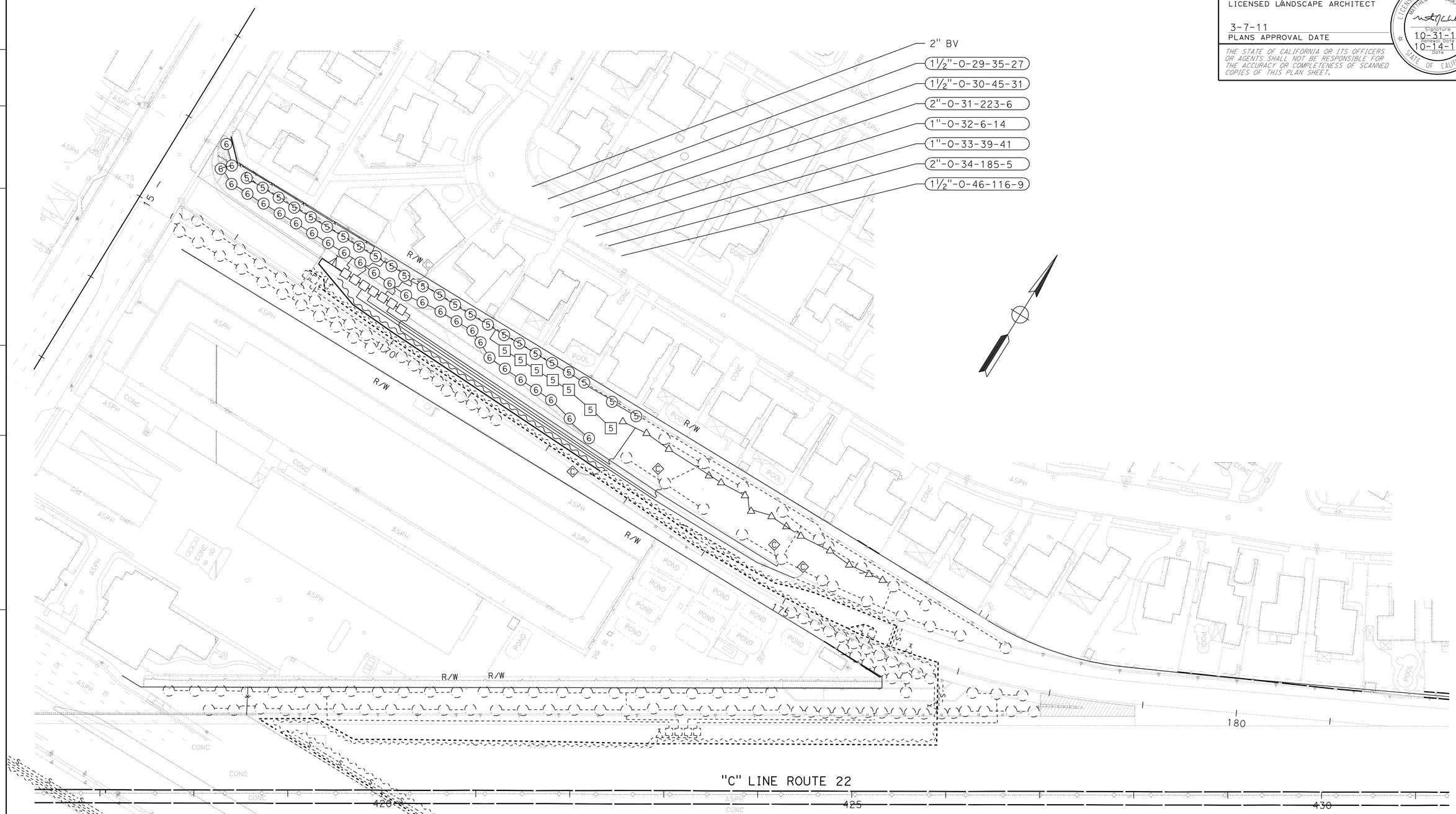


# IRRIGATION PLAN

SCALE 1" = 50'

**IP-1**

THIS PLAN IS ACCURATE FOR IRRIGATION WORK ONLY.

STATE OF CALIFORNIA - DEPARTMENT OF TRANSPORTATION
Caltrans® LANDSCAPE ARCHITECTURE

SENIOR LANDSCAPE ARCHITECT: ERIC DICKSON

CALCULATED-DESIGNED BY: LANDON MARES
CHECKED BY: MATTHEW J CASLAVKA

REVISED BY
DATE REVISED

LAST REVISION 10-12-10
DATE PLOTTED => 08-MAR-2011
TIME PLOTTED => 12:37

| Dist | COUNTY | ROUTE | POST MILES TOTAL PROJECT | SHEET No. | TOTAL SHEETS |
|---|---|---|---|---|---|
| 12 | Ora | 22 | R8.8/R9.1 | 15 | 42 |

10-14-10
LICENSED LANDSCAPE ARCHITECT

3-7-11
PLANS APPROVAL DATE

LICENSED LANDSCAPE ARCHITECT MATTHEW J CASLAVKA 5671 Signature 10-31-11 Renewal Date 10-14-10 Date STATE OF CALIFORNIA

*THE STATE OF CALIFORNIA OR ITS OFFICERS OR AGENTS SHALL NOT BE RESPONSIBLE FOR THE ACCURACY OR COMPLETENESS OF SCANNED COPIES OF THIS PLAN SHEET.*

**NOTE:**

FOR ACCURATE RIGHT OF WAY AND ACCESS DATA,
CONTACT RIGHT OF WAY ENGINEERING AT THE DISTRICT OFFICE.

## SPRINKLER SCHEDULE

| SYMBOL | TYPE | DESCRIPTION | SPRAY PATTERN | OPERATING PRESSURE (PSI) | PRESSURE COMPENSATING | PLUS/MINUS 5% DISCHARGE: GALLONS PER MINUTE (GPM) | PLUS/MINUS 5% DISCHARGE: GALLONS PER HOUR (GPH) | RADIUS (Ft) | WIDTH × LENGTH (Ft) | MATERIAL | NOZZLE SIZE (INCH) | INLET CONNECTION (NPT INCH) | POSITIVE-LOCKING ADJ ARC STOP | BACKSPLASH PREVENTER | DIFFUSER PIN | DISTANCE CONTROL FLAP | ADJ DISCHARGE | RISER: TYPE | RISER: MATERIAL: PLASTIC | RISER: MATERIAL: GALVANIZED | RISER: SIZE (IPS INCH) | RISER: HEIGHT (INCH) | RISER: FLOW SHUTOFF DEVICE | ⑤ SWING JOINT (TYPE) | RISER SUPPORT | SPRINKLER PROTECTOR (TYPE) | REMARKS |
|---|---|---|---|---|---|---|---|---|---|---|---|---|---|---|---|---|---|---|---|---|---|---|---|---|---|---|---|
| ⑤ | A-5 | GEAR DRIVEN | P | 35 | — | .9 | — | 20 | — | PL | — | ¾" | — | — | — | — | X | IV | X | — | ¾" | 12" | — | III | X | — | GEAR DRIVEN ROTOR |
| [5] | A-5 | GEAR DRIVEN | F | 35 | — | .9 | — | 20 | — | PL | — | ¾" | — | — | — | — | X | IV | X | — | ¾" | 12" | — | III | X | — | GEAR DRIVEN ROTOR |
| ⑥ | A-6 | GEAR DRIVEN | P | 35 | — | 1.6 | — | 30 | — | PL | — | ¾" | — | — | — | — | X | — | — | — | — | — | — | I | — | I | GEAR DRIVEN ROTOR POP-UP W/ PROTECTOR |
| △ | B-1 | SPRAY | Q | 30 | — | .39 | — | 10 | — | PL | — | ½" | — | — | — | — | X | IV | X | — | ½" | 12" | — | III | X | — | SHRUB SPRAY HEAD |

X IN BOX DENOTES REQUIREMENT

**APPLICABLE WHEN CIRCLED BELOW:**

1 - See Detail
2 - If a pressure compensating device is specified, the discharge and radii shown reflect its use.
3 - Arc Stop shall be fitted with a nut and bolt.
4 - Vinyl-coated cast iron housing.
⑤ - Swing Joints required adjacent to shoulders, curbs, sidewalks, and dikes.

**ABBREVIATIONS**

Adj — adjustable
B/B — brass/bronze
B/B/PL — brass/bronze/plastic
B/PL — brass/plastic
CST — center strip
DN — diameter nominal
EST — end strip
F — full circle
F/P — full/part circle
H — half circle
IPS — iron pipe size
GPH — gallons per hour
GPM — gallons per minute
Ft — feet
NPT — national pipe thread
P — part circle
PL — plastic
Q — quarter circle
SST — side strip
T — third circle
TQ — three quarter circle
TT — two thirds circle

| | ¾" | 1" | 1¼" | 1½" | 2 " | RCV |
|---|---|---|---|---|---|---|
| ⑤ [5] ⑥ △ | 0 GPM-10 GPM | 11 GPM-16 GPM | 17 GPM-26 GPM | 27 GPM-35 GPM | 36 GPM-55 GPM | □ |

**LATERAL PIPE SIZING CHART**

# LANDSCAPE DETAILS

SCALE 1" = 50'

**LD-1**

THIS PLAN IS ACCURATE FOR PLANTING WORK ONLY.

STATE OF CALIFORNIA - DEPARTMENT OF TRANSPORTATION
Caltrans® LANDSCAPE ARCHITECTURE

SENIOR LANDSCAPE ARCHITECT: ERIC DICKSON
CALCULATED-DESIGNED BY: LANDON MARES
CHECKED BY: MATTHEW J CASLAVKA
REVISED BY
DATE REVISED

LAST REVISION 10-12-10 | DATE PLOTTED => 07-MAR-2011 | TIME PLOTTED => 14:01

| Dist | COUNTY | ROUTE | POST MILES TOTAL PROJECT | SHEET No. | TOTAL SHEETS |
|---|---|---|---|---|---|
| 12 | Ora | 22 | R8.8/R9.1 | 16 | 42 |

REGISTERED ELECTRICAL ENGINEER 10-14-10 DATE

3-7-11
PLANS APPROVAL DATE

REGISTERED PROFESSIONAL ENGINEER SHAHRAM SHAHRIARI No. E13485 Exp. 9/30/12 ELECTRICAL STATE OF CALIFORNIA

*THE STATE OF CALIFORNIA OR ITS OFFICERS OR AGENTS SHALL NOT BE RESPONSIBLE FOR THE ACCURACY OR COMPLETENESS OF SCANNED COPIES OF THIS PLAN SHEET.*

**NOTE:**

FOR ACCURATE RIGHT OF WAY DATA, CONTACT RIGHT OF WAY ENGINEERING AT THE DISTRICT OFFICE.

## CONDUCTOR AND CONDUIT SCHEDULE

| CONDUCTOR TYPE | FUNCTION | 1 | 2 | 3 | 4 | 5 |
|---|---|---|---|---|---|---|
| 12CSC | VEHICLE AND PED SIGNAL | 3 | 2 | 6 | 2 | 9 |
| 3CSC | PPB | 1 | - | 2 | 1 | 4 |
| #8 | SERVICE | - | 2 | 2 | - | 2 |
| #10 | LUMINAIRE | - | 2 | 2 | - | - |
| #12 | IISNS | - | 2 | - | - | - |
| DLC | Ø2 DETECTOR | - | - | - | 3 | 3 |
| | Ø6 DETECTOR | 3 | - | 3 | - | 3 |
| | Ø7 DETECTOR | - | - | 1 | - | 1 |
| | Ø8 DETECTOR | - | - | - | - | 3 |
| | TOTAL | 3 | - | 4 | 3 | 10 |
| 12-PAIR #19 (SIC) | | - | 1 | 1 | - | 1 |
| CONDUIT SIZE | | 2" | 2" | 4"(N) | 3" | 2-3"(N) |

REMOVE ALL EXISTING CONDUCTORS AND INSTALL NEW CONDUCTORS

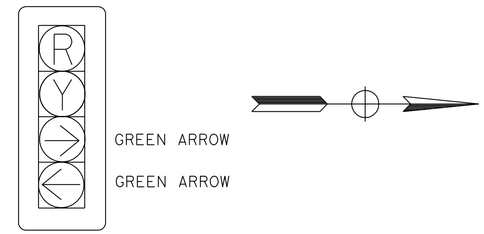


DETAIL "A"

## PHASE DIAGRAM




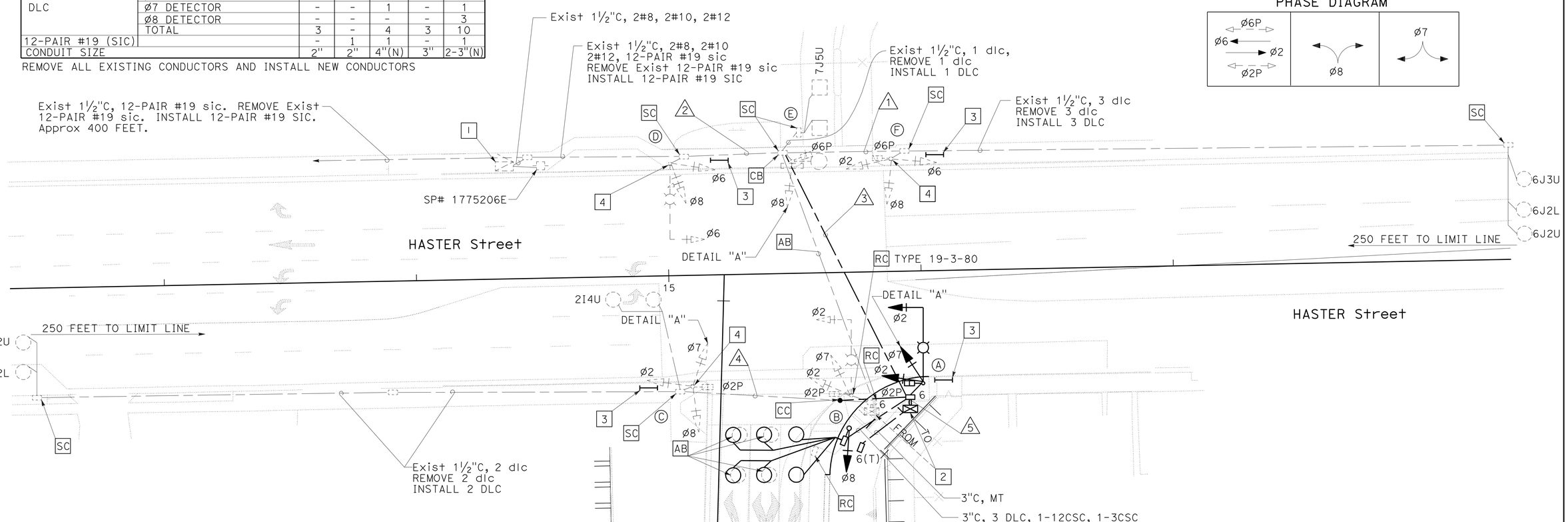


## EXISTING POLE AND EQUIPMENT SCHEDULE

| No. | STANDARD TYPE | STANDARD SMA | STANDARD LMA | VEH SIG MTG MAST ARM | VEH SIG MTG POLE | PED SIGNAL MTG | POLE Ø | POLE ARROW | HPS LUMINAIRE | IISNS |
|---|---|---|---|---|---|---|---|---|---|---|
| Ⓐ | 19A-3-100 (N) | 30'(N) | 12'(N) | MAS(N) | SV-2-TA(N) | SP-1-T(N) | - | - | 310 W(N) | |
| Ⓑ | 1-A(N) | - | - | - | TV-1-TA(N) | - | 2 | → | - | |
| Ⓒ | 1-A | - | - | - | TV-3-TA | SP-1-T | 2 | → | - | |
| Ⓓ | 19-3-80 | 30' | 12' | MAS | SV-2-TA | - | - | - | 200 W | |
| Ⓔ | 15 | - | 12' | - | SV-1-TA | SP-1-T | 6 | ← | 200 W | HASTER St |
| Ⓕ | 1-A | - | - | - | TV-3-TA | SP-1-T | 6 | → | - | |

(N) - NEW

**NOTES: (THIS SHEET)**

1. EXISTING 120/240 V SERVICE EQUIPMENT ENCLOSURE.
2. RL EXISTING 332 CABINET WITH MODEL 2070 CONTROLLER AND BBS.
3. INSTALL TYPE I PEDESTRIAN BARRICADE WITH SIGN R9-3A AND R9-3B BACK TO BACK.
4. RC EXISTING SIGN R9-3A AND R9-3B.

# SIGNAL AND LIGHTING

SCALE: 1" = 20'

THIS PLAN IS ACCURATE FOR ELECTRICAL WORK ONLY.

**E-1**

STATE OF CALIFORNIA - DEPARTMENT OF TRANSPORTATION
Caltrans ELECTRICAL DESIGN

FUNCTIONAL SUPERVISOR: SHAHRAM SHAHRIARI
CALCULATED-DESIGNED BY: FRANCIS M. ALVIAR
CHECKED BY: VANESSA V. TRUONG
REVISED BY / DATE REVISED

LAST REVISION 10-12-10 | DATE PLOTTED => 08-MAR-2011 | TIME PLOTTED => 07:19

| Dist | COUNTY | ROUTE | POST MILES TOTAL PROJECT | SHEET No. | TOTAL SHEETS |
|---|---|---|---|---|---|
| 12 | Ora | 22 | R8.8/R9.1 | 17 | 42 |

REGISTERED ELECTRICAL ENGINEER 10-14-10 DATE

3-7-11
PLANS APPROVAL DATE

REGISTERED PROFESSIONAL ENGINEER
SHAHRAM SHAHRIARI
No. E13485
Exp. 9/30/12
ELECTRICAL
STATE OF CALIFORNIA

*THE STATE OF CALIFORNIA OR ITS OFFICERS OR AGENTS SHALL NOT BE RESPONSIBLE FOR THE ACCURACY OR COMPLETENESS OF SCANNED COPIES OF THIS PLAN SHEET.*

**NOTE:**

FOR ACCURATE RIGHT OF WAY DATA, CONTACT RIGHT OF WAY ENGINEERING AT THE DISTRICT OFFICE.

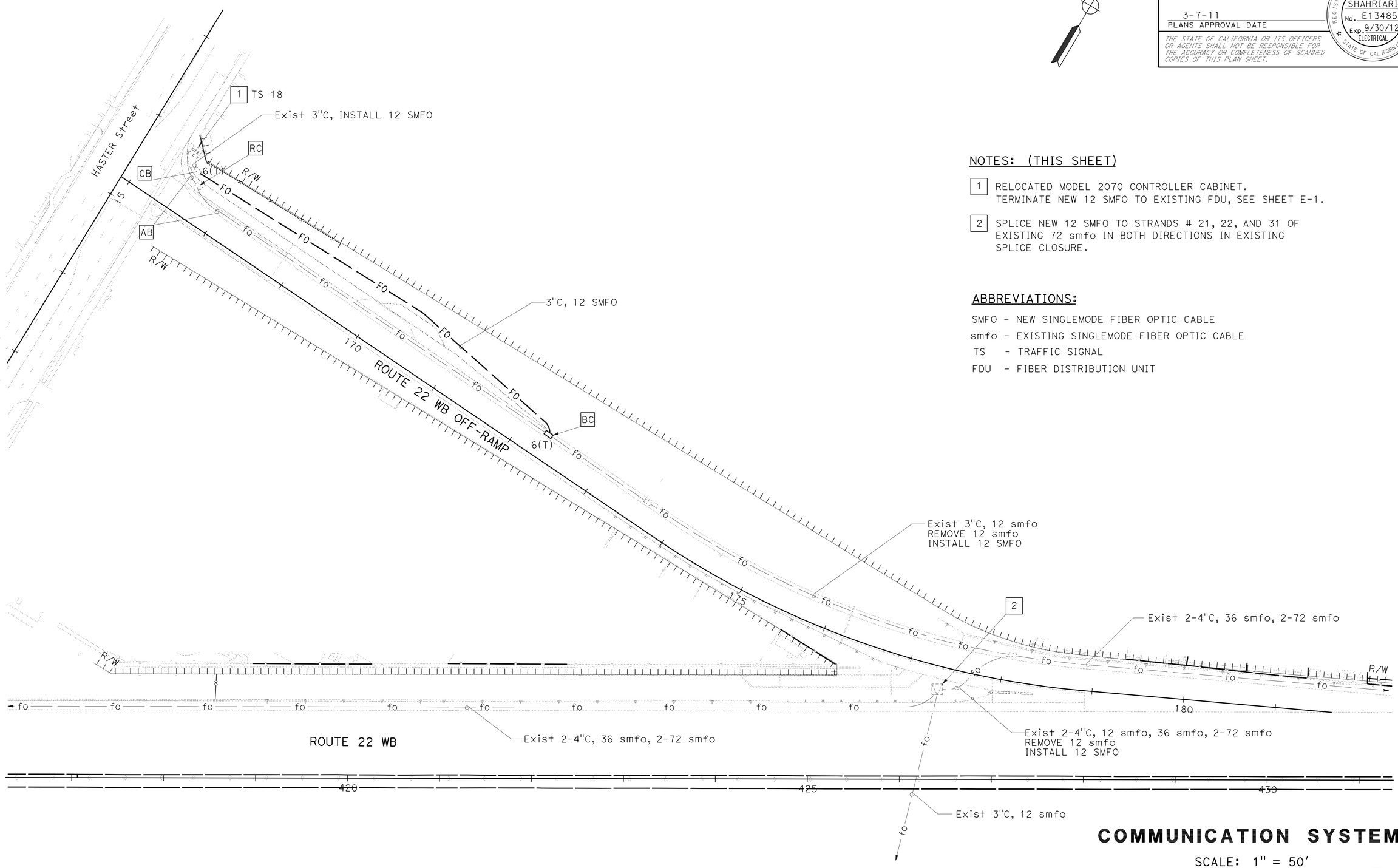


**NOTES: (THIS SHEET)**

1. RELOCATED MODEL 2070 CONTROLLER CABINET. TERMINATE NEW 12 SMFO TO EXISTING FDU, SEE SHEET E-1.
2. SPLICE NEW 12 SMFO TO STRANDS # 21, 22, AND 31 OF EXISTING 72 smfo IN BOTH DIRECTIONS IN EXISTING SPLICE CLOSURE.

**ABBREVIATIONS:**

SMFO - NEW SINGLEMODE FIBER OPTIC CABLE
smfo - EXISTING SINGLEMODE FIBER OPTIC CABLE
TS - TRAFFIC SIGNAL
FDU - FIBER DISTRIBUTION UNIT

THIS PLAN IS ACCURATE FOR ELECTRICAL WORK ONLY.

# COMMUNICATION SYSTEM

SCALE: 1" = 50'

**E-2**

STATE OF CALIFORNIA - DEPARTMENT OF TRANSPORTATION
Caltrans®
ELECTRICAL DESIGN

FUNCTIONAL SUPERVISOR: SHAHRAM SHAHRIARI
CALCULATED-DESIGNED BY: FRANCIS M. ALVIAR
CHECKED BY: VANESSA V. TRUONG
REVISED BY
DATE REVISED

LAST REVISION DATE PLOTTED => 07-MAR-2011
10-12-10 TIME PLOTTED => 14:46

| DIST | COUNTY | ROUTE | POST MILES TOTAL PROJECT | SHEET NO. | TOTAL SHEETS |
|---|---|---|---|---|---|
| 12 | Ora | 22 | R8.8/R9.1 | 18 | 42 |

REGISTERED CIVIL ENGINEER

June 6, 2008
PLANS APPROVAL DATE

REGISTERED PROFESSIONAL ENGINEER
Donald E. Howe
No. C46402
Exp. 3-31-09
CIVIL
STATE OF CALIFORNIA

*The State of California or its officers or agents shall not be responsible for the accuracy or completeness of electronic copies of this plan sheet.*

*To accompany plans dated* 3-7-11

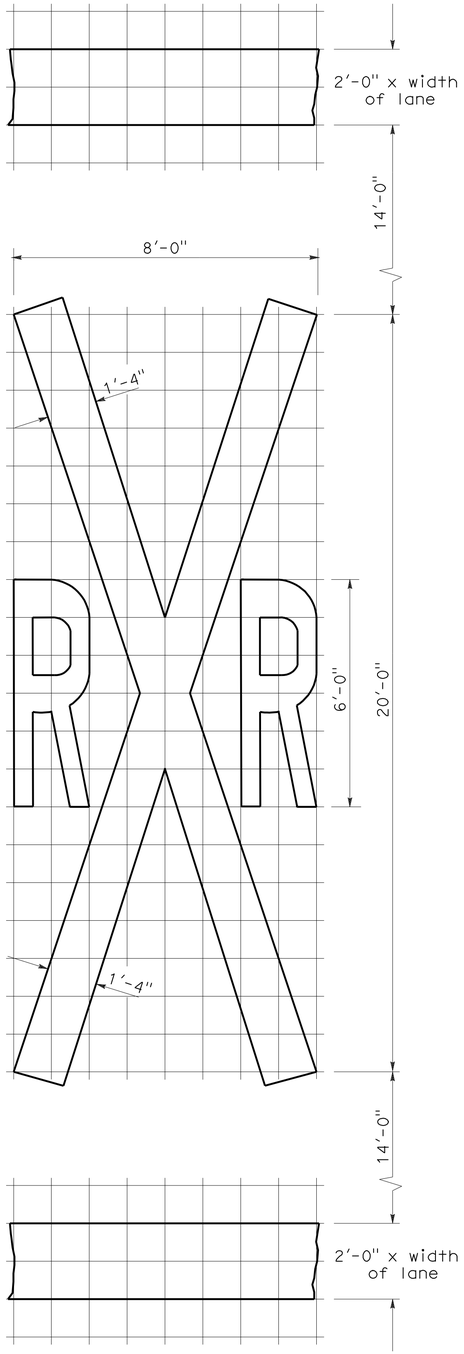


RAILROAD CROSSING SYMBOL

✳70 sq ft DOES NOT INCLUDE THE 2'-0" x VARIABLE WIDTH TRANSVERSE LINES.

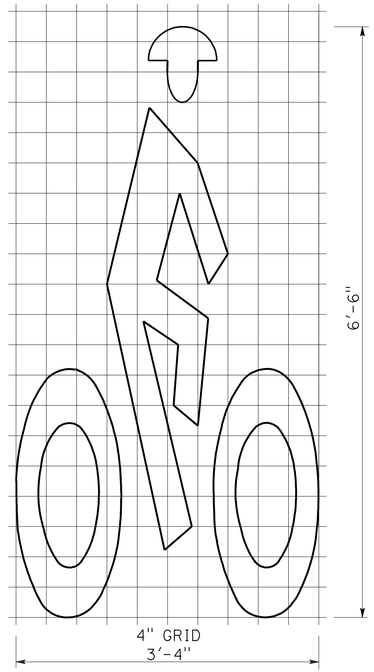


BIKE LANE SYMBOL

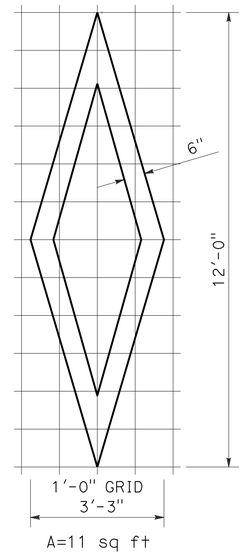


DIAMOND SYMBOL

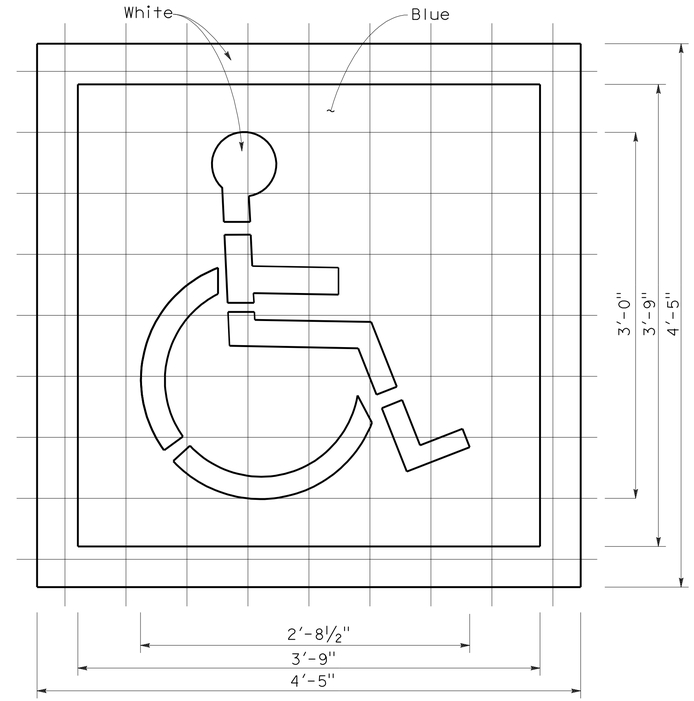


INTERNATIONAL SYMBOL OF ACCESSIBILITY MARKING

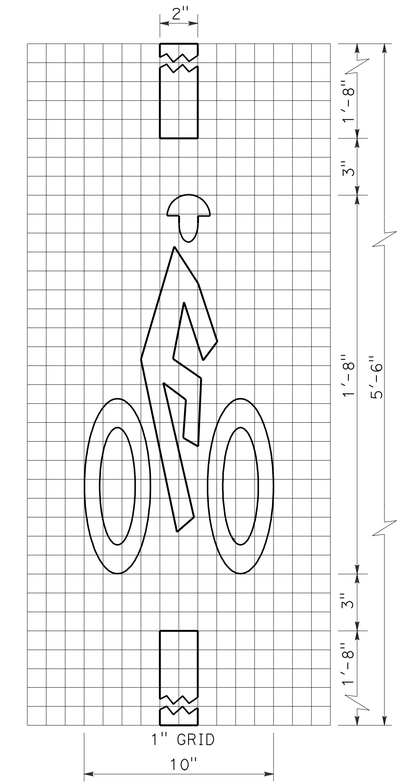


BICYCLE LOOP DETECTOR SYMBOL

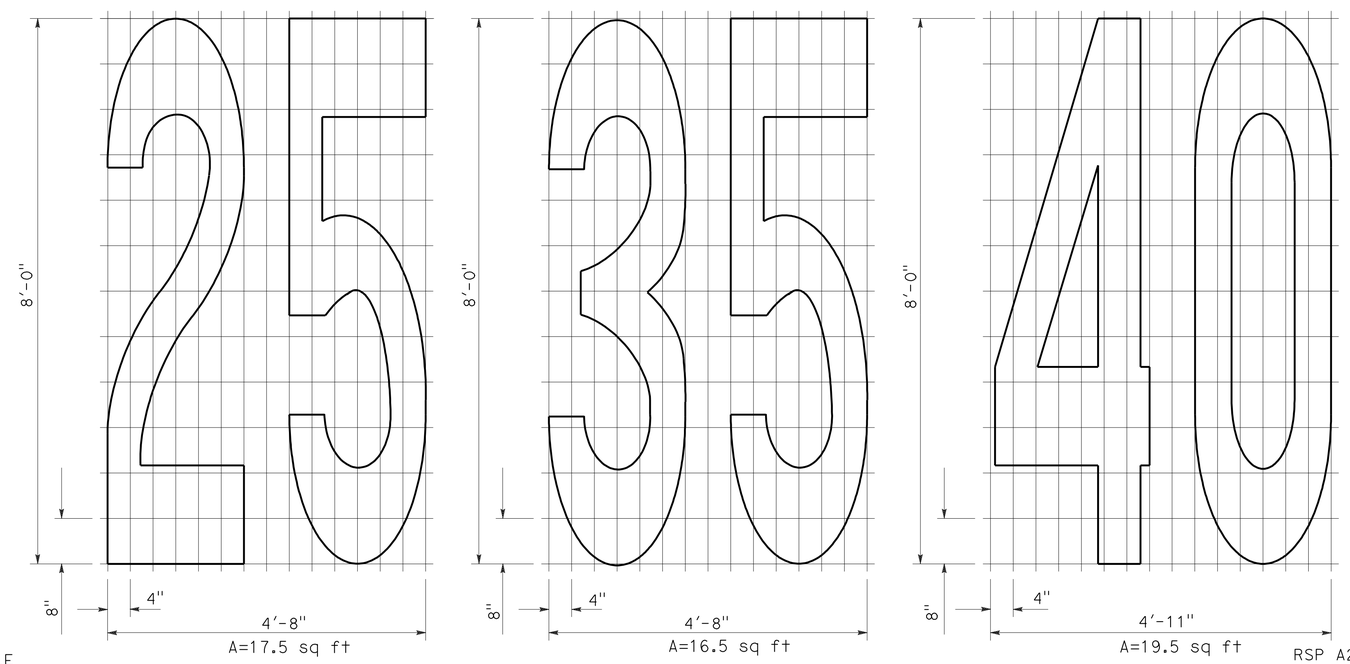


NUMERALS

NOTE:

1. Minor variations in dimensions may be accepted by the Engineer.

STATE OF CALIFORNIA
DEPARTMENT OF TRANSPORTATION

# PAVEMENT MARKINGS SYMBOLS AND NUMERALS

NO SCALE

RSP A24C DATED JUNE 6, 2008 SUPERSEDES STANDARD PLAN A24C DATED MAY 1, 2006 - PAGE 11 OF THE STANDARD PLANS BOOK DATED MAY 2006.

**REVISED STANDARD PLAN RSP A24C**

**2006 REVISED STANDARD PLAN RSP A24C**

5-27-08

| DIST | COUNTY | ROUTE | POST MILES TOTAL PROJECT | SHEET NO. | TOTAL SHEETS |
|---|---|---|---|---|---|
| 12 | Ora | 22 | R8.8/R9.1 | 19 | 42 |

REGISTERED CIVIL ENGINEER

November 17, 2006
PLANS APPROVAL DATE

REGISTERED PROFESSIONAL ENGINEER Michael Janzen No. 44788 Exp. 03-31-08 CIVIL STATE OF CALIFORNIA

*The State of California or its officers or agents shall not be responsible for the accuracy or completeness of electronic copies of this plan sheet.*

*To accompany plans dated* 3-7-11

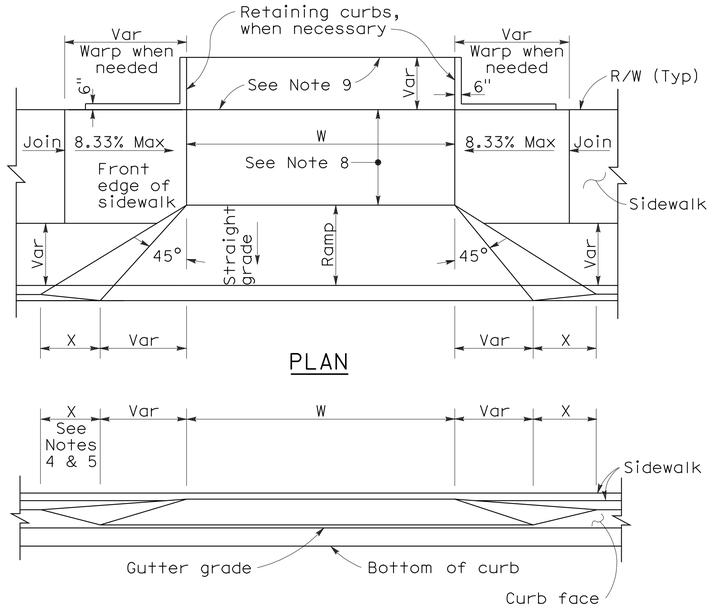


PLAN

ELEVATION

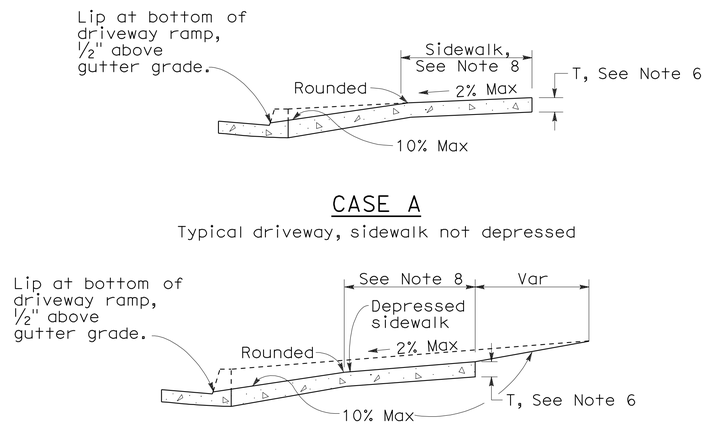


CASE A

Typical driveway, sidewalk not depressed

CASE B

Driveway with depressed sidewalk

SECTIONS

## CURB QUANTITIES

| TYPE | CUBIC YARDS PER LINEAR FOOT |
|---|---|
| A1-6 | 0.02585 |
| A1-8 | 0.03084 |
| A2-6 | 0.05903 |
| A2-8 | 0.06379 |
| A3-6 | 0.01036 |
| A3-8 | 0.01435 |
| B1-4 | 0.02185 |
| B1-6 | 0.02930 |
| B2-4 | 0.05515 |
| B2-6 | 0.06171 |
| B3-4 | 0.00641 |
| B3-6 | 0.01074 |
| B4 | 0.05709 |
| D-4 | 0.04083 |
| D-6 | 0.06804 |
| E | 0.06661 |

## TABLE A

| CURB TYPE | DIMENSIONS "H1" | "H2" | "W1" | "W2" |
|---|---|---|---|---|
| A1-6 | 1'-2" | 6" | 7½" | 1½" |
| A1-8 | 1'-4" | 8" | 8" | 2" |
| A2-6 | 1'-0" | 6" | 2'-7½" | 1½" |
| A2-8 | 1'-2" | 8" | 2'-8" | 2" |
| A3-6 | 6" | 5" | 7¼" | 1¼" |
| A3-8 | 8" | 7" | 7¾" | 1¾" |
| B1-4 | 1'-0" | 4" | 7½" | 2½" |
| B1-6 | 1'-2" | 6" | 9" | 4" |
| B2-4 | 10" | 4" | 2'-7½" | 2½" |
| B2-6 | 1'-0" | 6" | 2'-9" | 4" |
| B3-4 | 4" | 3" | 7" | 2" |
| B3-6 | 6" | 5" | 8½" | 3½" |
| D-4 | 10" | 4" | 1'-6" | 1'-1" |
| D-6 | 1'-0" | 6" | 2'-2" | 1'-8" |

## DRIVEWAYS

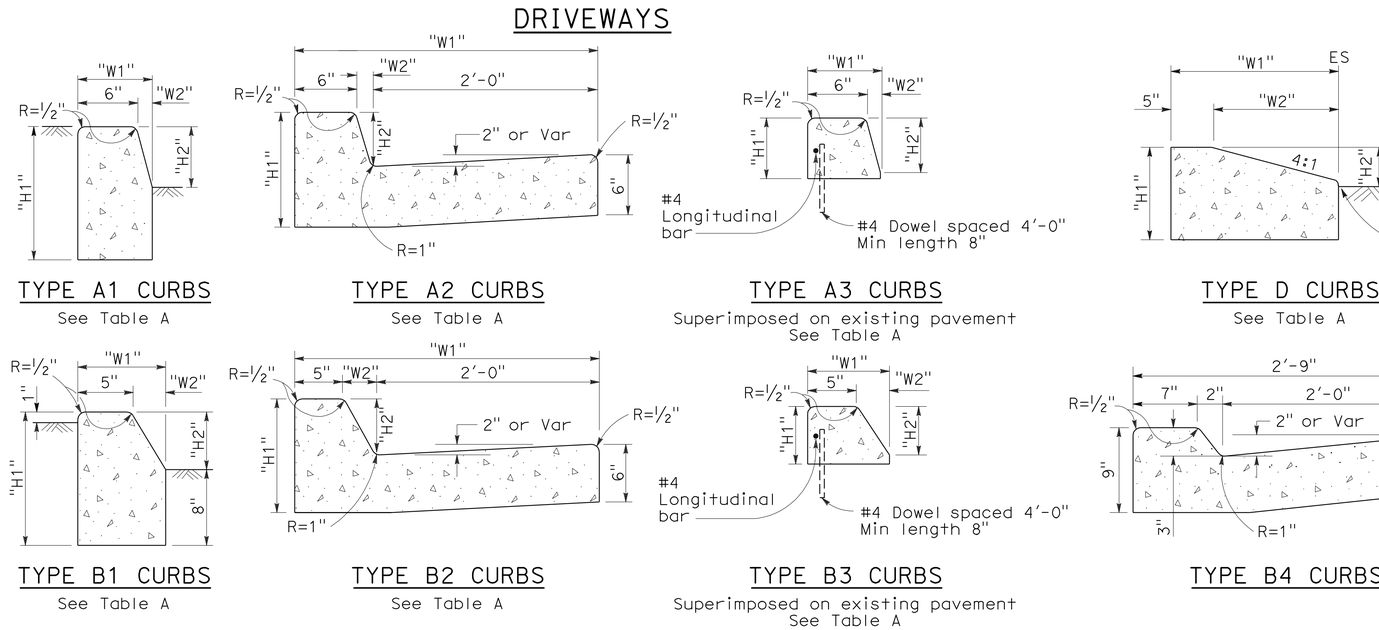


TYPE A1 CURBS
See Table A

TYPE A2 CURBS
See Table A

TYPE A3 CURBS
Superimposed on existing pavement
See Table A

TYPE D CURBS
See Table A

TYPE E CURB

TYPE B1 CURBS
See Table A

TYPE B2 CURBS
See Table A

TYPE B3 CURBS
Superimposed on existing pavement
See Table A

TYPE B4 CURBS

TYPE H CURB
On Bridges

## CURBS

NOTES:

1. Case A driveway section typically applies.
2. Use Case B driveway section when ramp slopes would exceed 10% in Case A.
3. Use Case B driveway section when sidewalk cross slope would exceed 2% in Case A.
4. X=3'-0" except for curb heights over 10" where 4:1 slopes shall be used on curb slope.
5. X is a variable when sidewalk is located where wheelchairs may traverse the surface. Slopes shall not exceed 8.33%.
6. Sidewalk and ramp thickness "T" at driveway shall be 4" for residental and 6" for commercial.
7. Difference in slope of the driveway ramp and the slope of a line between the gutter and a point on the roadway 5'-0" from gutter line shall not exceed 15%. Reduce driveway ramp slope, not gutter slope, where required.
8. Minimum width of clear passageway for sidewalk shall be 4'-0".
9. Retaining curbs and acquisition of construction easement may be necessary for narrow sidewalks or curb heights in excess of 6".
10. Across the pedestrian route at curb ramp locations, the gutter pan slope shall not exceed 1" of depth for each 2'-0" of width.

STATE OF CALIFORNIA
DEPARTMENT OF TRANSPORTATION

# CURBS AND DRIVEWAYS

NO SCALE

RSP A87A DATED NOVEMBER 17, 2006 SUPERSEDES STANDARD PLAN A87A DATED MAY 1, 2006 - PAGE 113 OF THE STANDARD PLANS BOOK DATED MAY 2006.

**REVISED STANDARD PLAN RSP A87A**

**2006 REVISED STANDARD PLAN RSP A87A**

10-25-06

| DIST | COUNTY | ROUTE | POST MILES TOTAL PROJECT | SHEET NO. | TOTAL SHEETS |
|---|---|---|---|---|---|
| 12 | Ora | 22 | R8.8/R9.1 | 20 | 42 |

REGISTERED CIVIL ENGINEER

September 1, 2006
PLANS APPROVAL DATE

REGISTERED PROFESSIONAL ENGINEER
Hector David Cordova
No. C41957
Exp. 3-31-08
CIVIL
STATE OF CALIFORNIA

*The State of California or its officers or agents shall not be responsible for the accuracy or completeness of electronic copies of this plan sheet.*

*To accompany plans dated* 3-7-11

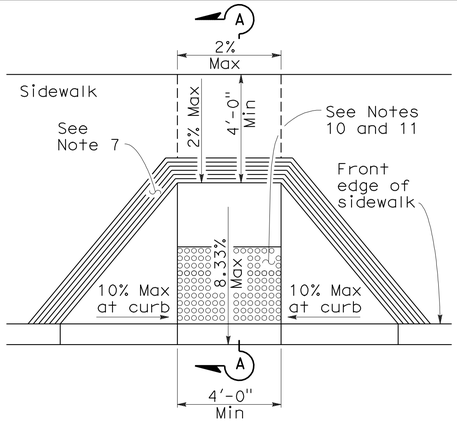


CASE A

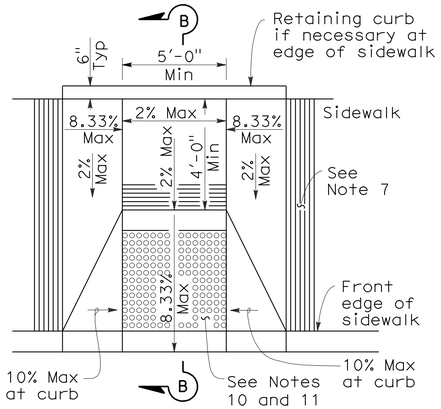


CASE B

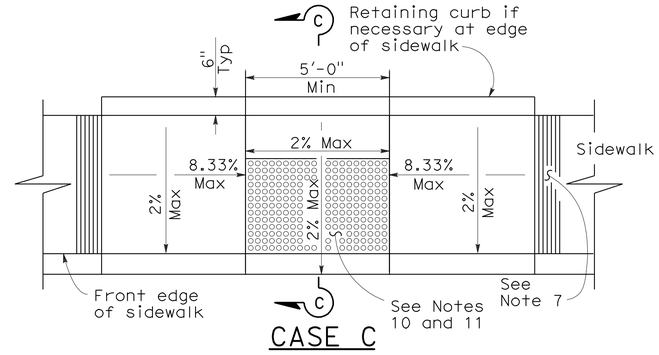


CASE C

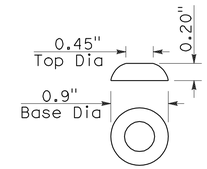


RAISED TRUNCATED DOME

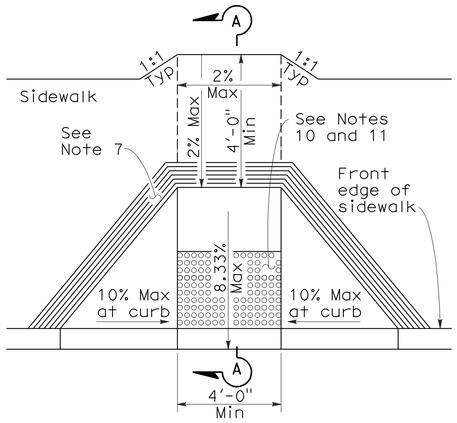


CASE D

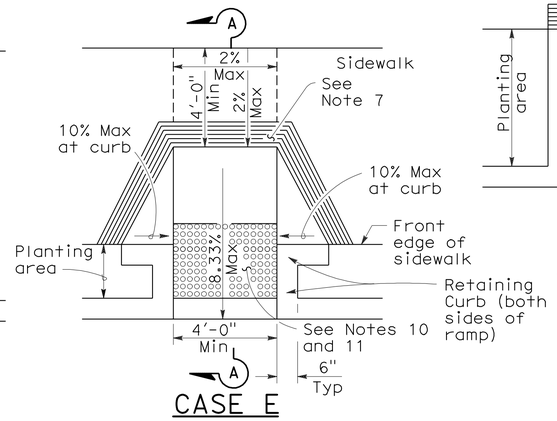


CASE E

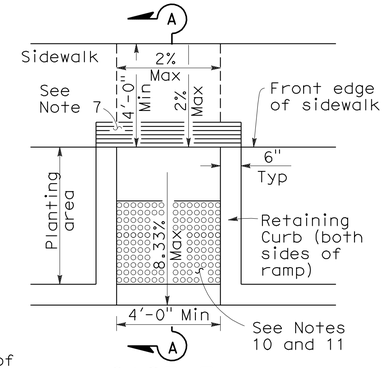


CASE F

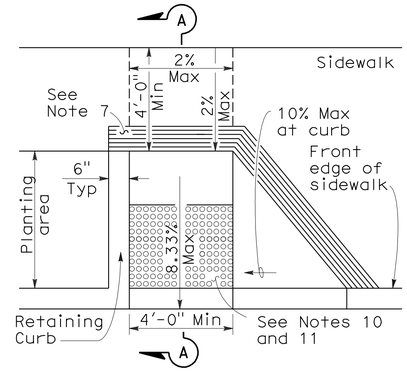


CASE G
See Note 4

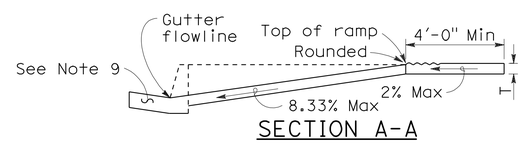


SECTION A-A

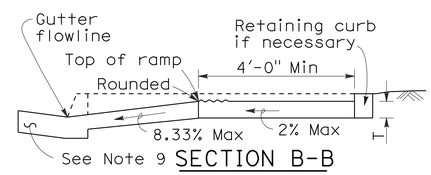


SECTION B-B

Depress entire sidewalk as required

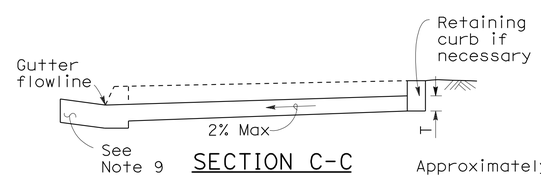


SECTION C-C

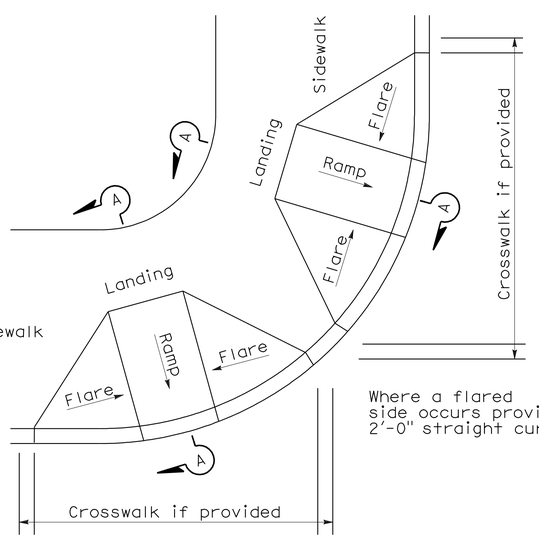


DETAIL A

TYPICAL TWO-RAMP CORNER INSTALLATION

See Note 1

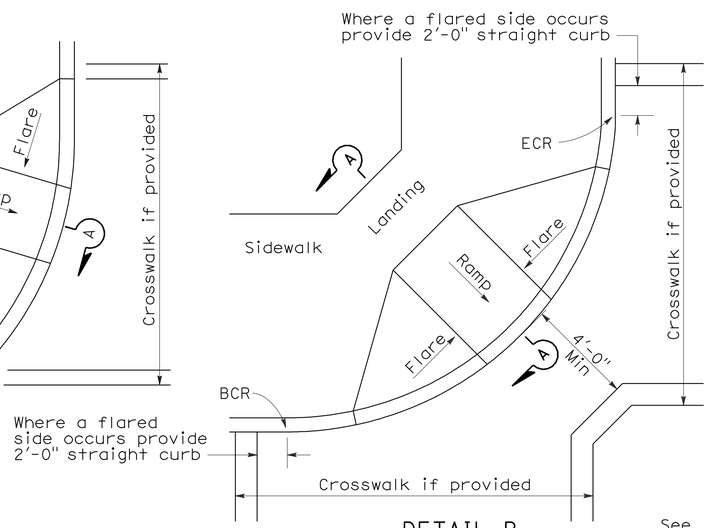


DETAIL B

TYPICAL ONE-RAMP CORNER INSTALLATION

See Notes 1 and 3

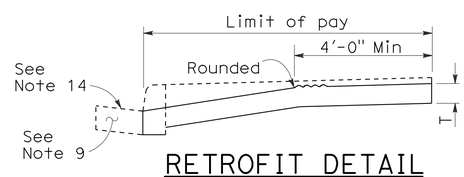


RETROFIT DETAIL

Existing curb and sidewalk

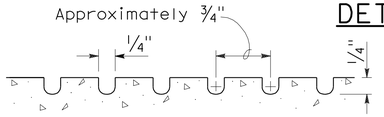


GROOVING DETAIL

## NOTES:

1. As site conditions dictate, Case A through Case G curb ramps may be used for corner installations similar to those shown in Detail A and Detail B. The case of curb ramps used in Detail A do not have to be the same. Case A through Case G curb ramps also may be used at mid block locations, as site conditions dictate.
2. If distance from curb to back of sidewalk is too short to accommodate ramp and 4'-0" platform (landing) as shown in Case A, the sidewalk may be depressed longitudinally as in Case B, or C or may be widened as in Case D.
3. When ramp is located in center of curb return, crosswalk configuration must be similar to that shown for Detail B.
4. As site conditions dictate, the retaining curb side and the flared side of the Case G ramp shall be constructed in reversed position.
5. If located on a curve, the sides of the ramp need not be parallel, but the minimum width of the ramp shall be 4'-0".
6. Side slope of ramp flares vary uniformly from a maximum of 10% at curb to conform with longitudinal sidewalk slope adjacent to top of the ramp, except in Case C and Case F.
7. The curb ramp shall be outlined, as shown, with a 1'-0" wide border with 1/4" grooves approximately 3/4" on center. See grooving detail.
8. Transitions from ramps and landing to walks, gutters or streets shall be flush and free of abrupt changes.
9. Maximum slopes of adjoining gutters, the road surface immediately adjacent to the curb ramp or accessible route shall not exceed 5 percent within 4'-0" of the top and bottom of the curb ramp.
10. Curb ramps shall have a detectable warning surface that extends the full width and 3'-0" depth of the ramp. Detectable Warning Surfaces shall conform to the details on this plan and the requirements in the Special Provisions.
11. The edge of the detectable warning surface nearest the street shall be between 6" and 8" from the gutter flowline.
12. Sidewalk and ramp thickness, "T", shall be 3 1/2" minimum.
13. Utility pull boxes, manholes, vaults and all other utility facilities within the boundaries of the curb ramp will be relocated or adjusted to grade by the owner prior to, or in conjunction with, curb ramp construction.
14. For retrofit conditions, removal and replacement of curb apron will be at the Contractor's option, unless otherwise shown on project plans.

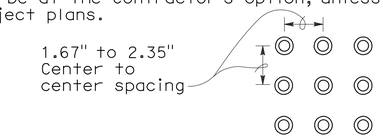


RAISED TRUNCATED DOME PATTERN (IN-LINE)

DETECTABLE WARNING SURFACE

See Note 10

STATE OF CALIFORNIA
DEPARTMENT OF TRANSPORTATION

# CURB RAMP DETAILS

NO SCALE

RSP A88A DATED SEPTEMBER 1, 2006 SUPERSEDES STANDARD PLAN A88A DATED MAY 1, 2006 - PAGE 115 OF THE STANDARD PLANS BOOK DATED MAY 2006.

**REVISED STANDARD PLAN RSP A88A**

**2006 REVISED STANDARD PLAN RSP A88A**

8-3-06

| DIST | COUNTY | ROUTE | POST MILES TOTAL PROJECT | SHEET NO. | TOTAL SHEETS |
|---|---|---|---|---|---|
| 12 | Ora | 22 | R8.8/R9.1 | 21 | 42 |

William K. Farnbach
REGISTERED CIVIL ENGINEER

June 5, 2009
PLANS APPROVAL DATE

REGISTERED PROFESSIONAL ENGINEER
William K. Farnbach
No. C49042
Exp. 9-30-10
CIVIL
STATE OF CALIFORNIA

*The State of California or its officers or agents shall not be responsible for the accuracy or completeness of electronic copies of this plan sheet.*

*To accompany plans dated* 3-7-11

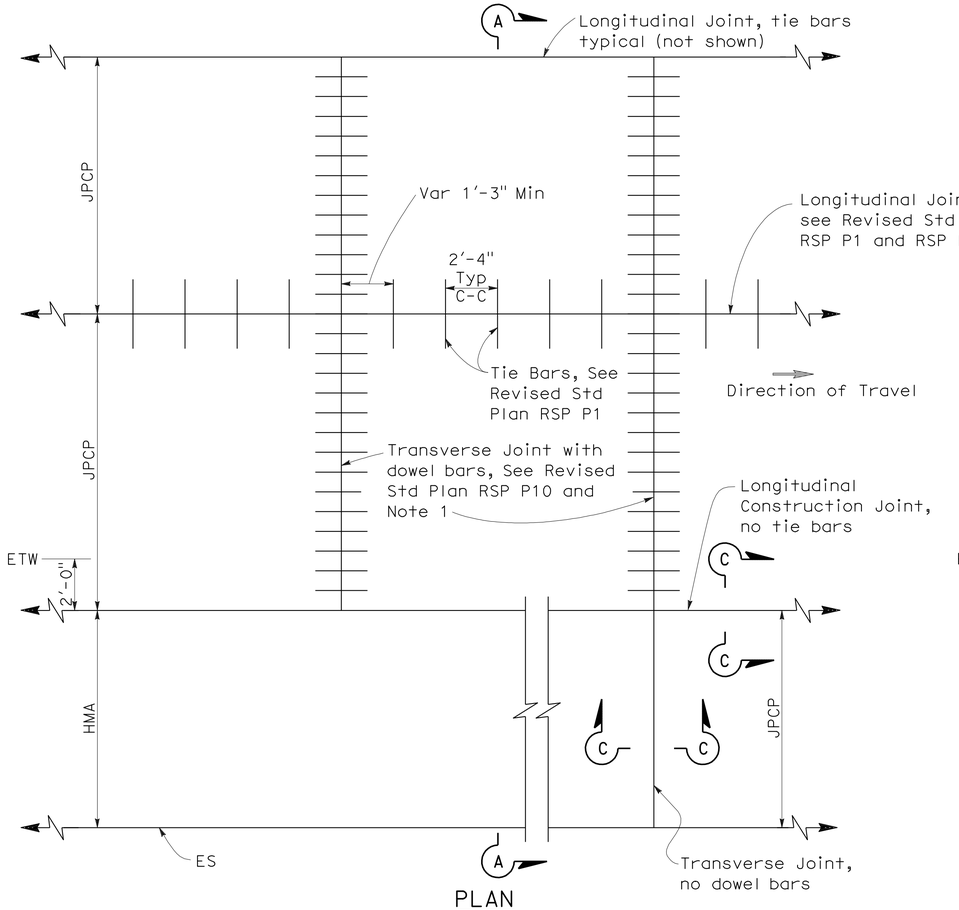


PLAN

NEW CONSTRUCTION

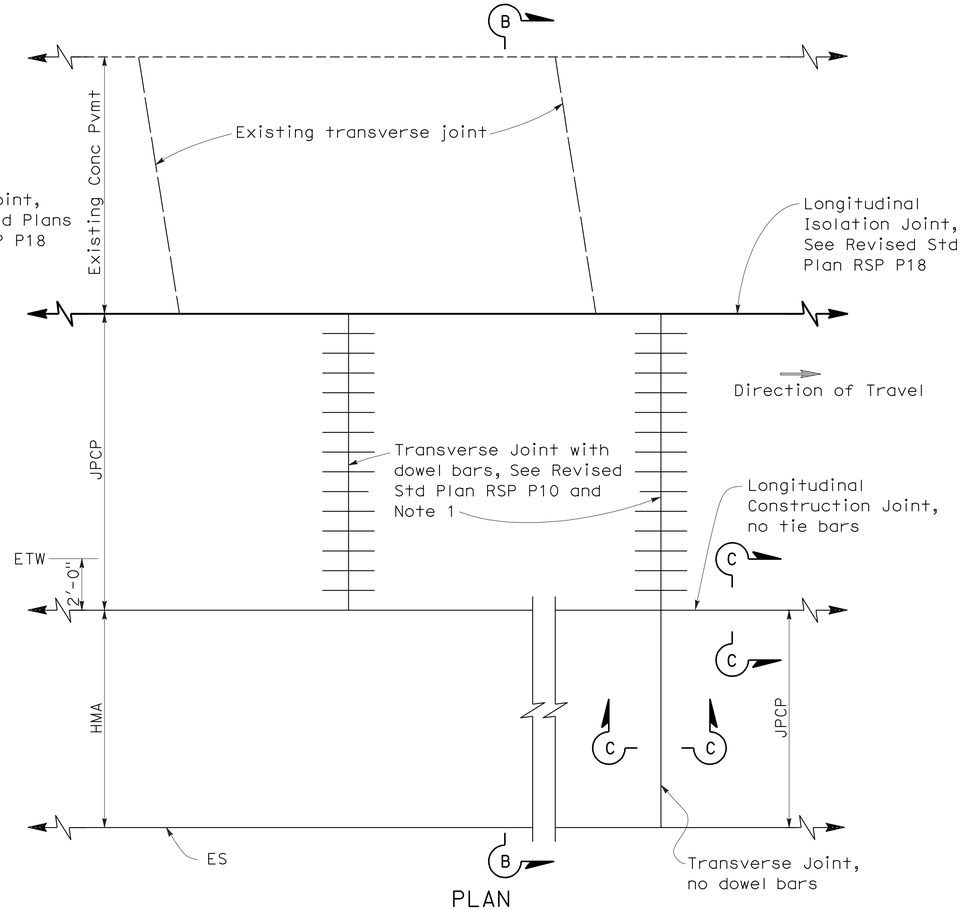


PLAN

LANE/SHOULDER ADDITION OR RECONSTRUCTION

## NOTES:

1. Transverse joints shall be constructed at right angles to the longitudinal pavement joints in new Jointed Plain Concrete Pavement and spaced at successive repeated intervals of 12', 15', 13' and 14'.
2. For locations of rumble strips, see project plans. For rumble strip details not shown, see Standard Plans A40A and A40B.
3. Joint spacing patterns do not apply to intersections.

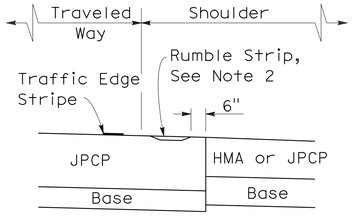


DETAIL "A"

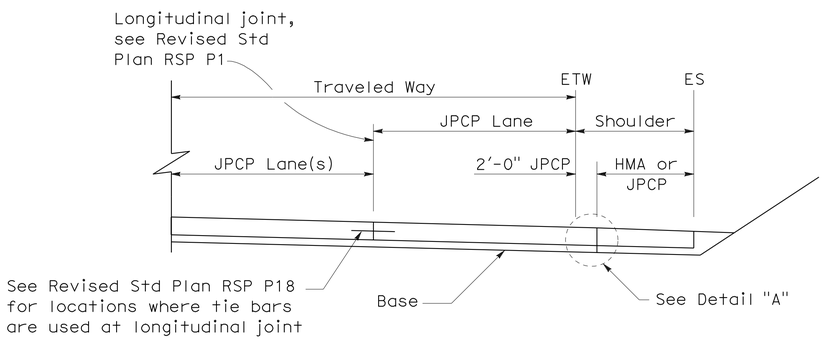


SECTION A-A

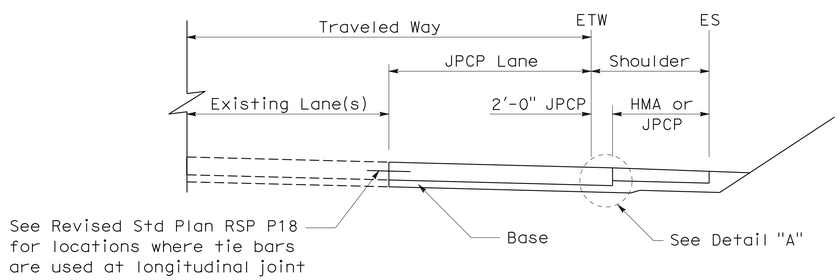


SECTION B-B

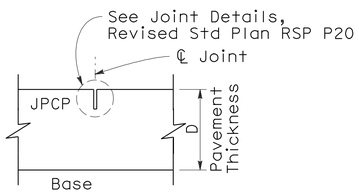


SECTION C-C

TRANSVERSE/LONGITUDINAL JOINT

(no dowel bars/tie bars)

STATE OF CALIFORNIA
DEPARTMENT OF TRANSPORTATION

# JOINTED PLAIN CONCRETE PAVEMENT-WIDENED SLAB DETAILS

NO SCALE

RSP P2 DATED JUNE 5, 2009 SUPERCEDES STANDARD PLAN P2
DATED MAY 1, 2006 - PAGE 120 OF THE STANDARD PLANS BOOK DATED MAY 2006.

**REVISED STANDARD PLAN RSP P2**

**2006 REVISED STANDARD PLAN RSP P2**

5-19-09

| DIST | COUNTY | ROUTE | POST MILES TOTAL PROJECT | SHEET NO. | TOTAL SHEETS |
|---|---|---|---|---|---|
| 12 | Ora | 22 | R8.8/R9.1 | 22 | 42 |

William K. Farnbach
REGISTERED CIVIL ENGINEER

May 15, 2009
PLANS APPROVAL DATE

REGISTERED PROFESSIONAL ENGINEER
William K. Farnbach
No. C49042
Exp. 9-30-10
CIVIL
STATE OF CALIFORNIA

*The State of California or its officers or agents shall not be responsible for the accuracy or completeness of electronic copies of this plan sheet.*

*To accompany plans dated* 3-7-11

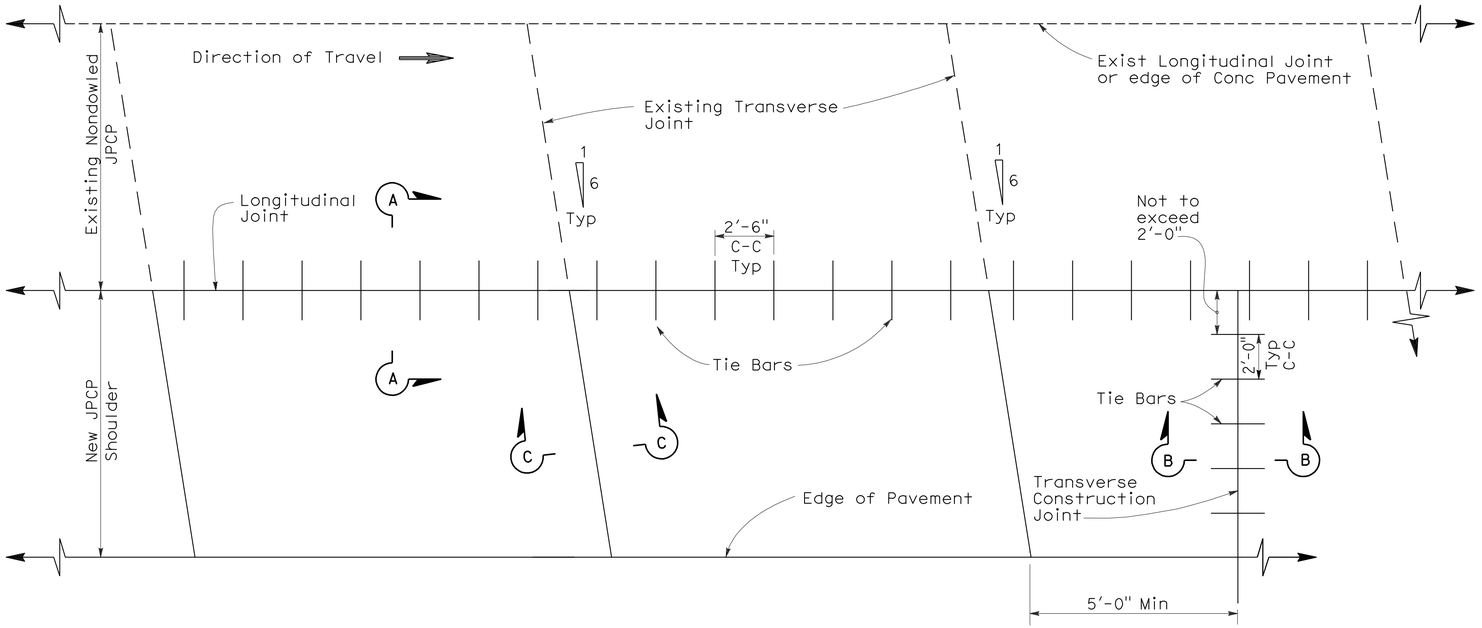


PLAN

## NOTES:

1. New transverse contraction joints shall match the skewed offset and spacing of the adjacent existing contraction joints, as shown.
2. Transverse construction joints, with tie bars spaced as shown, shall be installed at the end of paving operations. Transverse construction joints shall be placed at least 5'-0" from any contraction joint.
3. This Standard Plan only applicable for constructing a nondoweled Jointed Plain Concrete Pavement shoulder next to existing nondoweled Jointed Plain Concrete Pavement lane.
4. If fresh concrete is placed adjacent to existing concrete, the top corner of the new hardened concrete does not need to be rounded to the 1/4" radius as shown.

TABLE A

| Tie Bar Spacing | | |
|---|---|---|
| Slab Length | Total Tie Bars per Slab | Clearance Tie Bar to Transverse Joint |
| 9'-0" | 3 | 1'-3" |
| 9'-6" | 3 | 1'-4 1/2" |
| 12'-0" | 5 | 1'-4" |
| 13'-0" | 5 | 1'-10" |
| 14'-0" | 5 | 2'-3 3/4" |
| 15'-0" | 6 | 1'-8" |

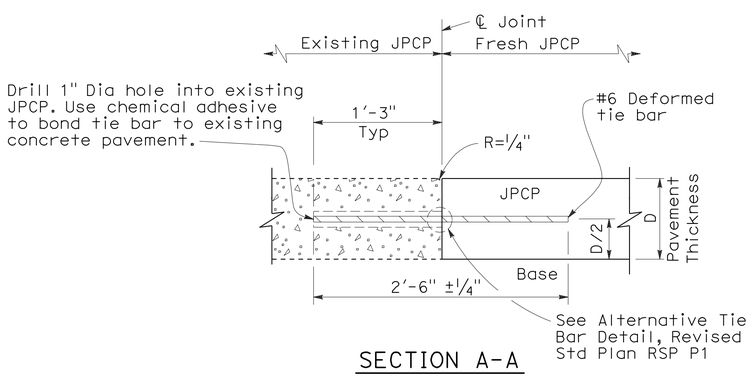


SECTION A-A

LONGITUDINAL JOINT
(Between fresh and hardened concrete)

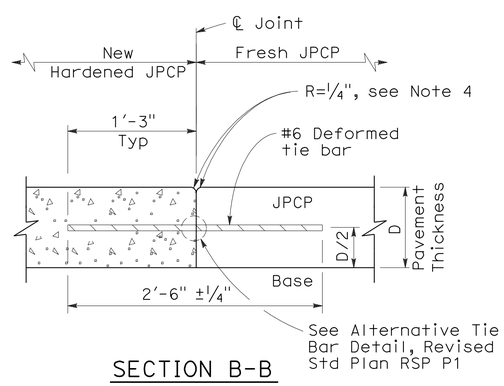


SECTION B-B

TRANSVERSE CONSTRUCTION JOINT

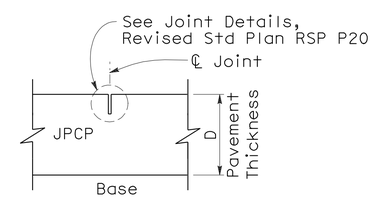


SECTION C-C

TRANSVERSE CONTRACTION JOINT

STATE OF CALIFORNIA
DEPARTMENT OF TRANSPORTATION

# JOINTED PLAIN CONCRETE PAVEMENT-NONDOWELED SHOULDER ADDITION/RECONSTRUCTION

NO SCALE

RSP P3 DATED MAY 15, 2009 SUPERSEDES RSP P3 DATED NOVEMBER 17, 2006 AND STANDARD PLAN P3 DATED MAY 1, 2006 - PAGE 121 OF THE STANDARD PLANS BOOK DATED MAY 2006.

**REVISED STANDARD PLAN RSP P3**

**2006 REVISED STANDARD PLAN RSP P3**

5-8-09

| DIST | COUNTY | ROUTE | POST MILES TOTAL PROJECT | SHEET NO. | TOTAL SHEETS |
|---|---|---|---|---|---|
| 12 | Ora | 22 | R8.8/R9.1 | 23 | 42 |

William K. Farnbach
REGISTERED CIVIL ENGINEER

May 15, 2009
PLANS APPROVAL DATE

REGISTERED PROFESSIONAL ENGINEER
William K. Farnbach
No. C49042
Exp. 9-30-10
CIVIL
STATE OF CALIFORNIA

*The State of California or its officers or agents shall not be responsible for the accuracy or completeness of electronic copies of this plan sheet.*

*To accompany plans dated* 3-7-11

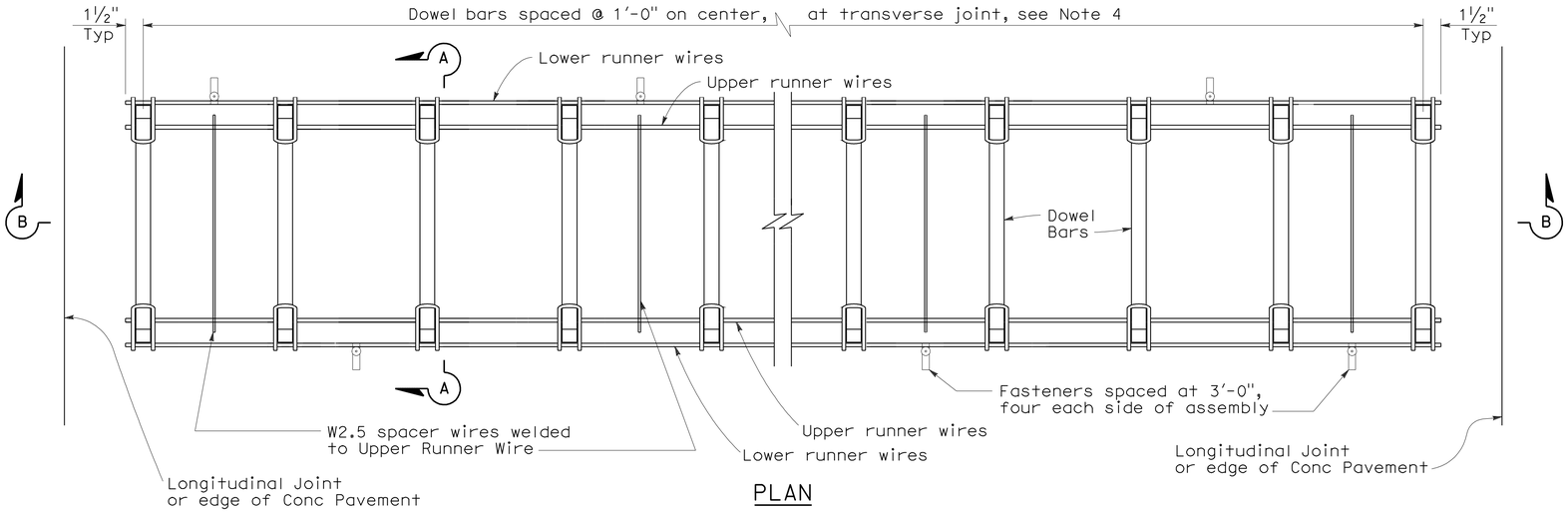


PLAN

## DOWEL BAR BASKET (TRANSVERSE JOINT)

See Note 1

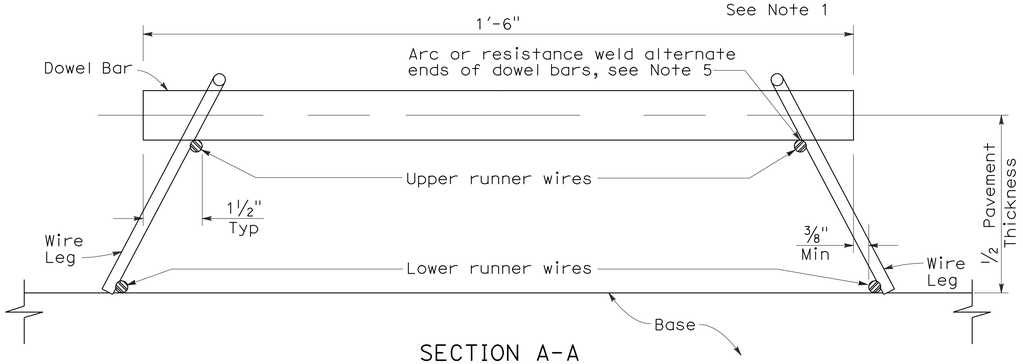


SECTION A-A

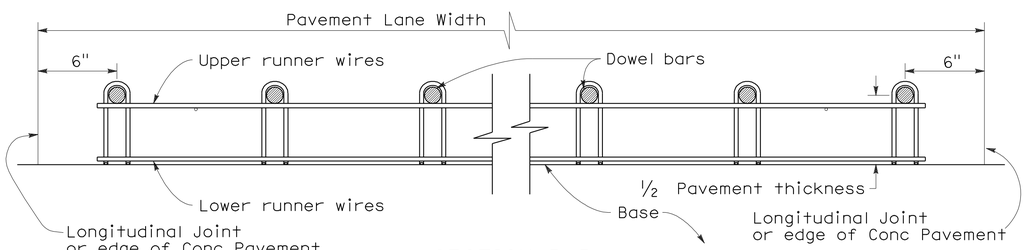


SECTION B-B

See Note 1

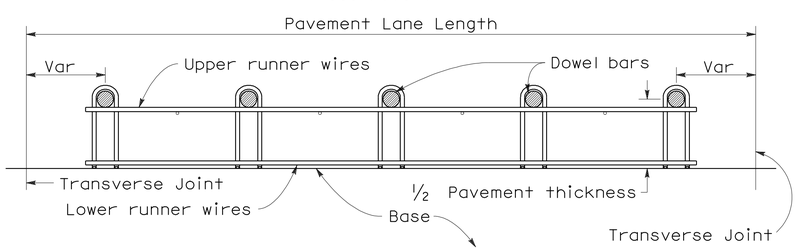


SECTION C-C

See Notes 1 and 4

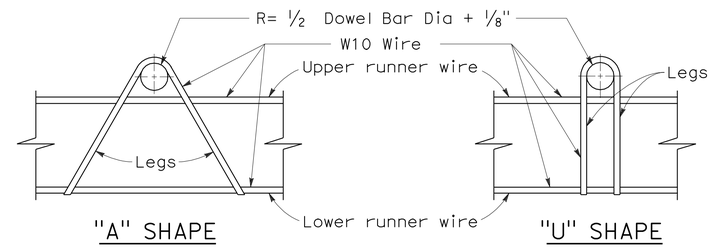


ASSEMBLY FRAME DETAILS

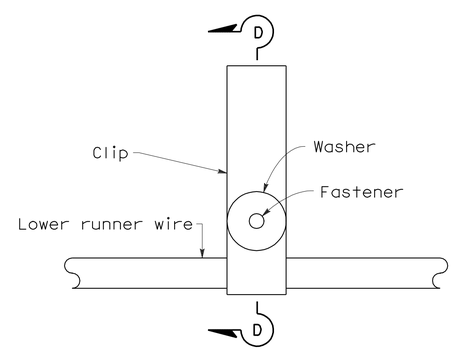


PLAN

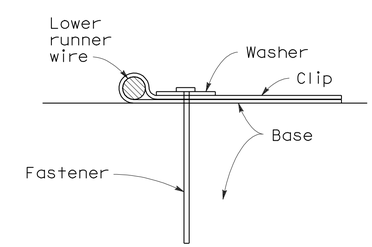


SECTION D-D

FASTENER DETAIL

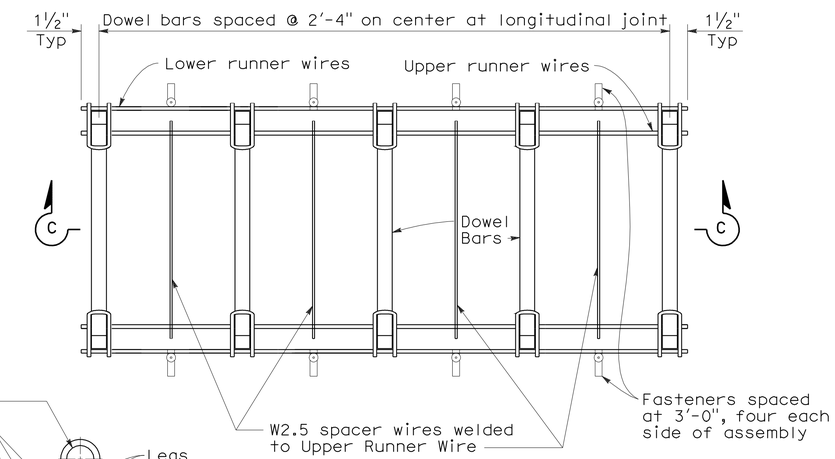


PLAN

## DOWEL BAR BASKET (LONGITUDINAL JOINT)

See Note 1

NOTES:

1. "U" frame shape assembly shown. "U" frame shape or "A" frame shape are acceptable.
2. Wire sizes shown are minimum required.
3. All wire intersections are to be resistance welded.
4. Use tie bar spacing for longitudinal dowel bar locations. See Revised Std Plans RSPs P1, P2, and P3 for tie bar requirements.
5. Weld may be at top or bottom of dowel bar.

STATE OF CALIFORNIA
DEPARTMENT OF TRANSPORTATION

# CONCRETE PAVEMENT-DOWEL BAR BASKET DETAILS

NO SCALE

RSP P12 DATED MAY 15, 2009 SUPERSEDES RSP P12 DATED NOVEMBER 17, 2006 AND STANDARD PLAN P12 DATED MAY 1, 2006 - PAGE 125 OF THE STANDARD PLANS BOOK DATED MAY 2006.

**REVISED STANDARD PLAN RSP P12**

**2006 REVISED STANDARD PLAN RSP P12**

5-8-09

| DIST | COUNTY | ROUTE | POST MILES TOTAL PROJECT | SHEET NO. | TOTAL SHEETS |
|---|---|---|---|---|---|
| 12 | Ora | 22 | R8.8/R9.1 | 24 | 42 |

William K. Farnbach
REGISTERED CIVIL ENGINEER

May 15, 2009
PLANS APPROVAL DATE

REGISTERED PROFESSIONAL ENGINEER
William K. Farnbach
No. C49042
Exp. 9-30-10
CIVIL
STATE OF CALIFORNIA

*The State of California or its officers or agents shall not be responsible for the accuracy or completeness of electronic copies of this plan sheet.*

*To accompany plans dated* 3-7-11

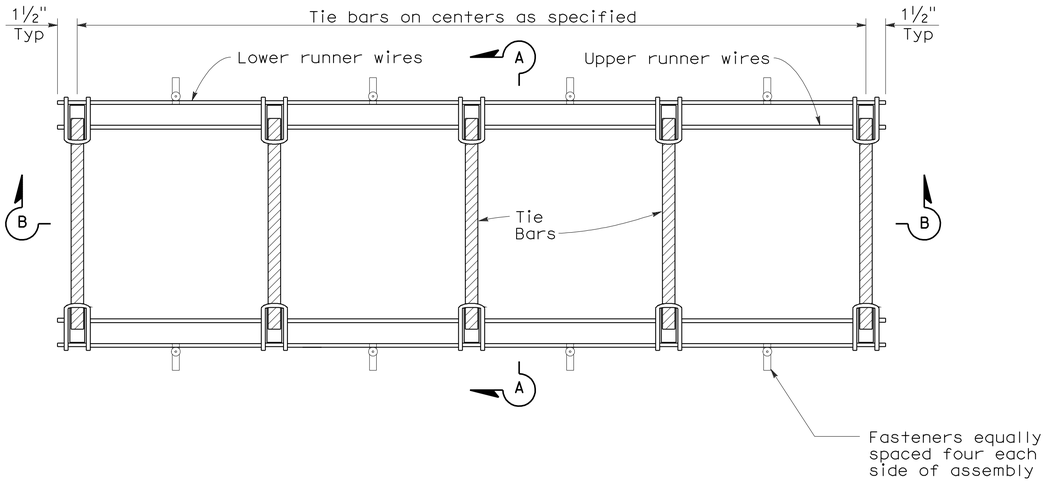


PLAN

## TIE BAR BASKET

(TIE BARS AT LONGITUDINAL JOINT)
See Note 1

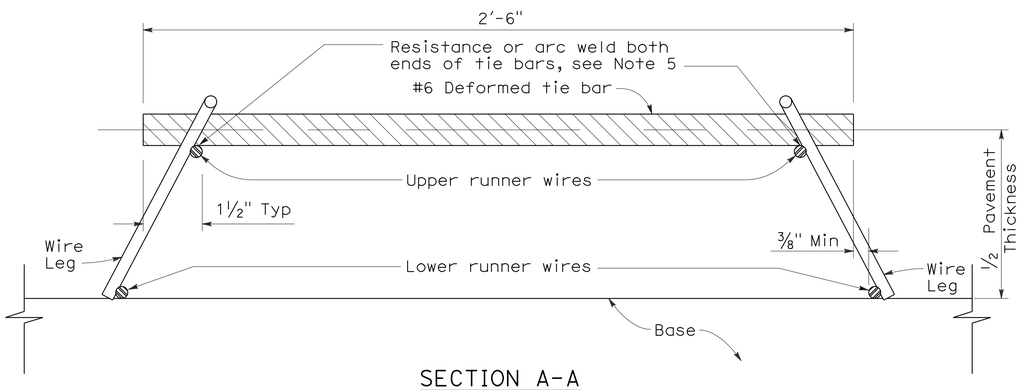


SECTION A-A

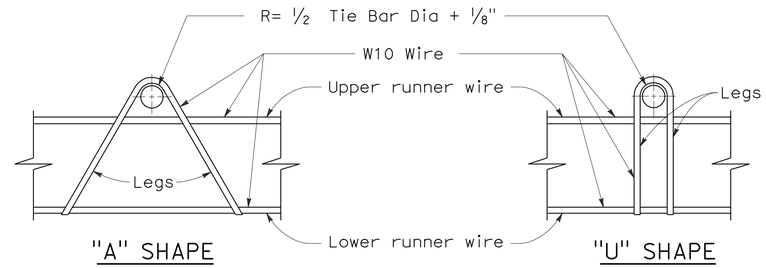


ASSEMBLY FRAME DETAILS

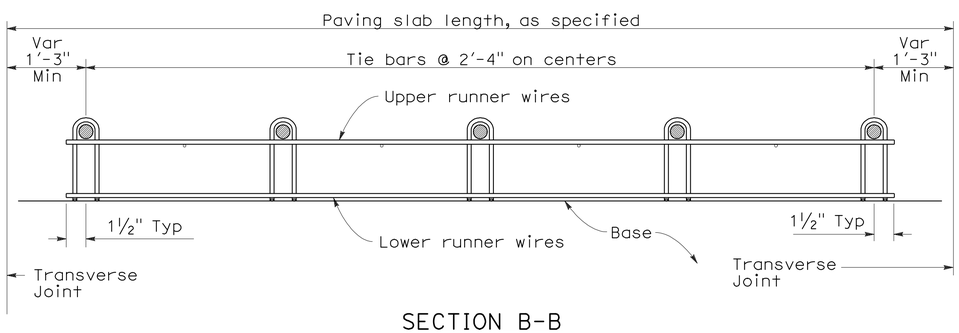


SECTION B-B
See Note 1

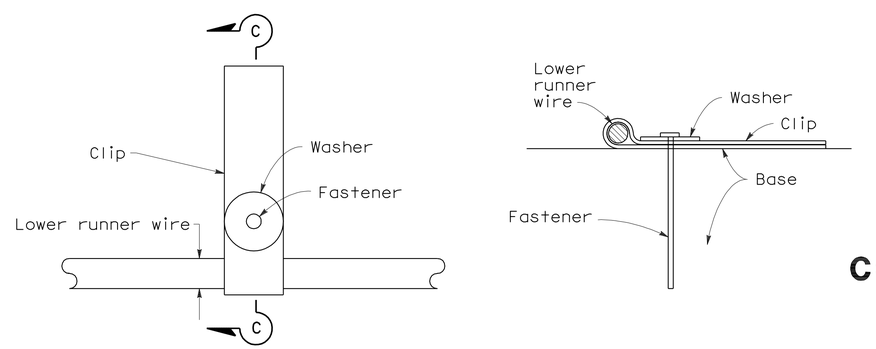


PLAN

SECTION C-C

FASTENER DETAIL

## NOTES:

1. "U" frame shape assembly shown. "U" frame shape or "A" frame shape are acceptable.
2. Wire sizes shown are minimum required.
3. All wire intersections are to be resistance welded.
4. Not for use on nondoweled skewed jointed plain concrete pavement.
5. Weld may be at top or bottom of tie bar.

STATE OF CALIFORNIA
DEPARTMENT OF TRANSPORTATION

# CONCRETE PAVEMENT-TIE BAR BASKET DETAILS

NO SCALE

RSP P17 DATED MAY 15, 2009 SUPERSEDES RSP P17 DATED NOVEMBER 17, 2006 AND STANDARD PLAN P17 DATED MAY 1, 2006 - PAGE 126 OF THE STANDARD PLANS BOOK DATED MAY 2006.

**REVISED STANDARD PLAN RSP P17**

**2006 REVISED STANDARD PLAN RSP P17**

5-8-09

| DIST | COUNTY | ROUTE | POST MILES TOTAL PROJECT | SHEET NO. | TOTAL SHEETS |
|---|---|---|---|---|---|
| 12 | Ora | 22 | R8.8/R9.1 | 25 | 42 |

William K. Farnbach
REGISTERED CIVIL ENGINEER

June 5, 2009
PLANS APPROVAL DATE

REGISTERED PROFESSIONAL ENGINEER
William K. Farnbach
No. C49042
Exp. 9-30-10
CIVIL
STATE OF CALIFORNIA

*The State of California or its officers or agents shall not be responsible for the accuracy or completeness of electronic copies of this plan sheet.*

*To accompany plans dated* 3-7-11

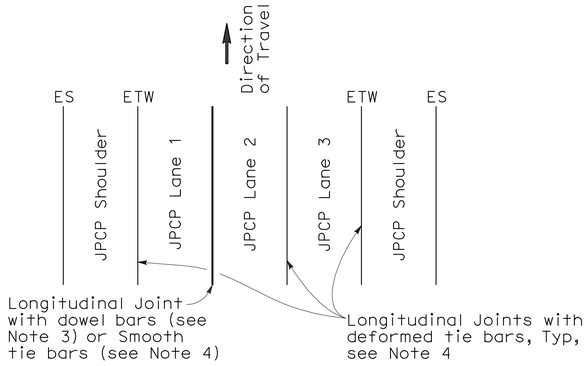


3 LANES WITH TIED CONCRETE SHOULDERS
PLAN

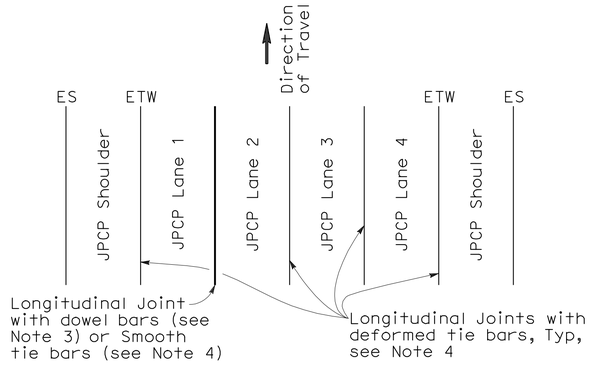


4 LANES WITH TIED CONCRETE SHOULDERS
PLAN

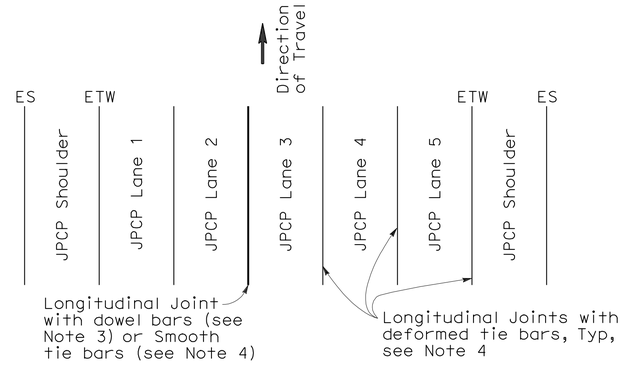


5 LANES WITH TIED CONCRETE SHOULDERS
PLAN

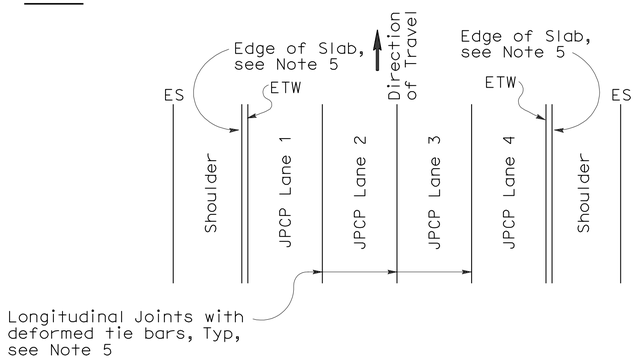


4 LANES OR LESS WITH WIDENED SLAB
PLAN

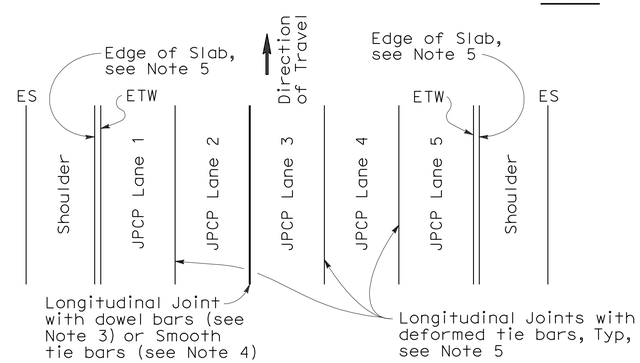


5 LANES WITH WIDENED SLAB
PLAN

## NEW CONSTRUCTION

Location of Longitudinal Joints
(For JPCP)

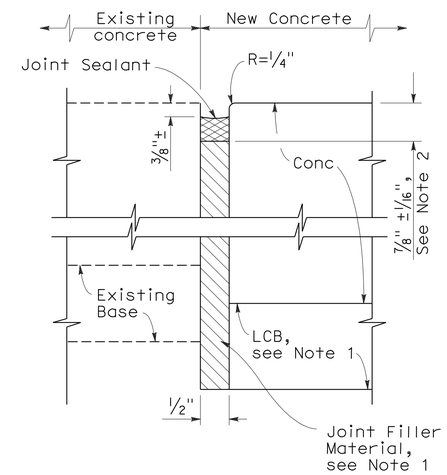


DETAIL A

ISOLATION JOINT

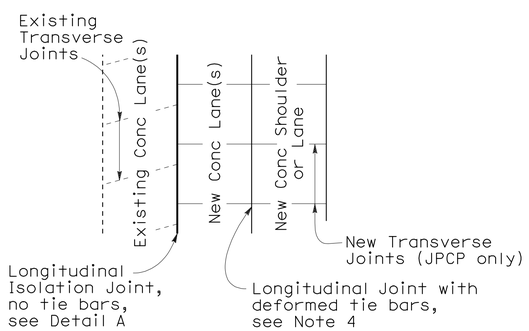


CASE 1
PLAN

Transverse Joints do not align between new and existing

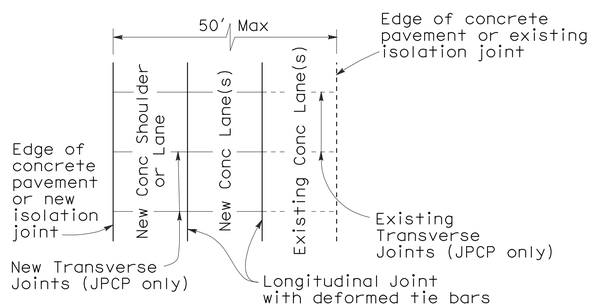


CASE 2
PLAN

Transverse Joints align between new and existing

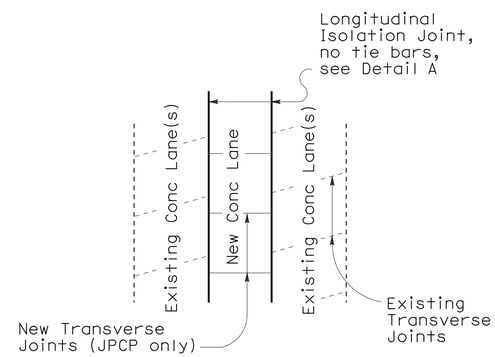


CASE 3 (INTERIOR LANE REPLACEMENT)
PLAN

Transverse Joints do not align between new and existing

## LANE/SHOULDER ADDITION OR RECONSTRUCTION

(For JPCP and CRCP)

## NOTES:

1. Where Lean Concrete Base is not used as base material, the joint filler material used for the longitudinal isolation joint shall only extend to the bottom of the new concrete slab. See Detail A.
2. Use 5/8" ±1/16" dimension for silicone sealant.
3. See Revised Standard Plan RSP P10 for longitudinal joint with dowel bars.
4. See Revised Standard Plan RSP P1.
5. See Revised Standard Plan RSP P2.

STATE OF CALIFORNIA
DEPARTMENT OF TRANSPORTATION

# CONCRETE PAVEMENT-LANE SCHEMATICS AND ISOLATION JOINT DETAIL

NO SCALE

RSP P18 DATED JUNE 5, 2009 SUPERSEDES RSP P18 DATED MAY 15, 2009, RSP P18 DATED NOVEMBER 17, 2006 AND STANDARD PLAN P18 DATED MAY 1, 2006 - PAGE 127 OF THE STANDARD PLANS BOOK DATED MAY 2006.

**REVISED STANDARD PLAN RSP P18**

**2006 REVISED STANDARD PLAN RSP P18**

5-14-09

NOTE:

1. Tie bars, dowel bars, and reinforcement are not shown in joint seal details, see Revised Standard Plans RSP P1, RSP P3, RSP P10, RSP P35, RSP P45, or RSP P46 as applicable.

| DIST | COUNTY | ROUTE | POST MILES TOTAL PROJECT | SHEET NO. | TOTAL SHEETS |
|---|---|---|---|---|---|
| 12 | Ora | 22 | R8.8/R9.1 | 26 | 42 |

William K. Farnbach
REGISTERED CIVIL ENGINEER

May 15, 2009
PLANS APPROVAL DATE

REGISTERED PROFESSIONAL ENGINEER
William K. Farnbach
No. C49042
Exp. 9-30-10
CIVIL
STATE OF CALIFORNIA

*The State of California or its officers or agents shall not be responsible for the accuracy or completeness of electronic copies of this plan sheet.*

*To accompany plans dated* 3-7-11

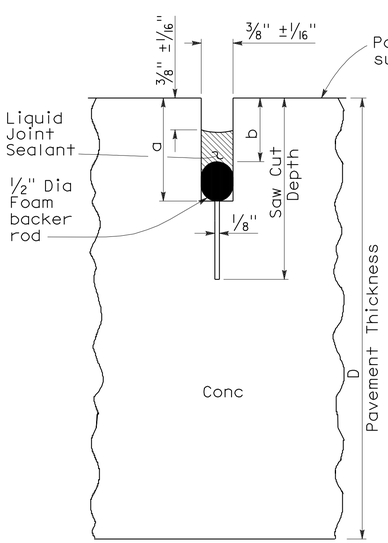


LIQUID SEALANT

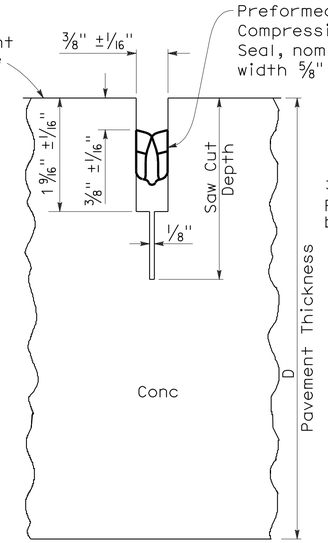


COMPRESSION SEAL

## TYPE A1

Transverse Contraction Joints

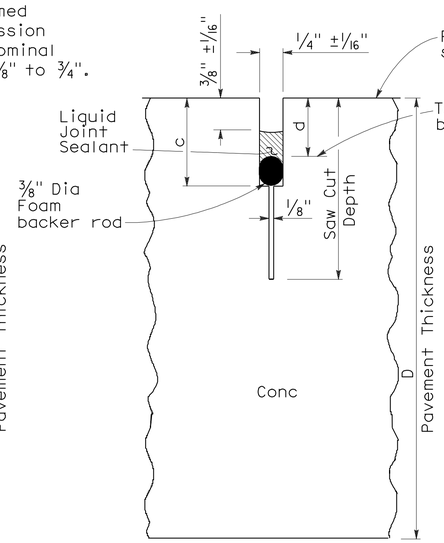


LIQUID SEALANT

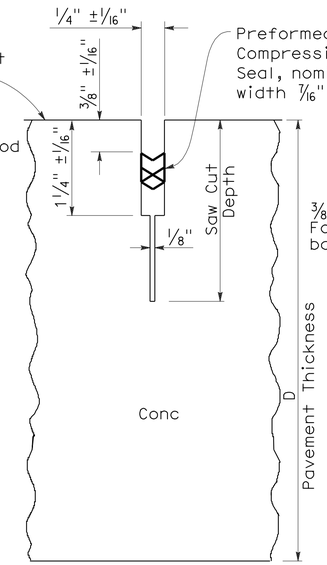


COMPRESSION SEAL

## TYPE A2

Longitudinal Contraction Joints

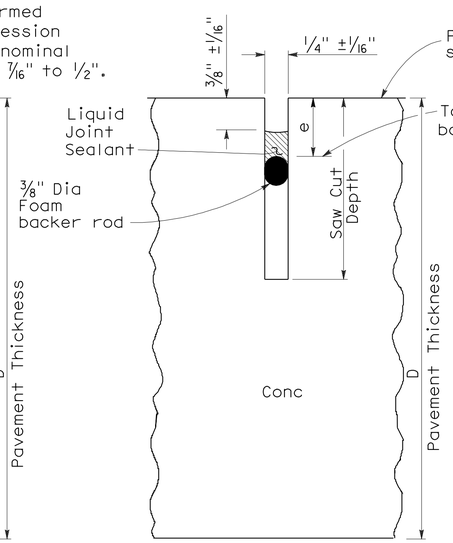


LIQUID SEALANT

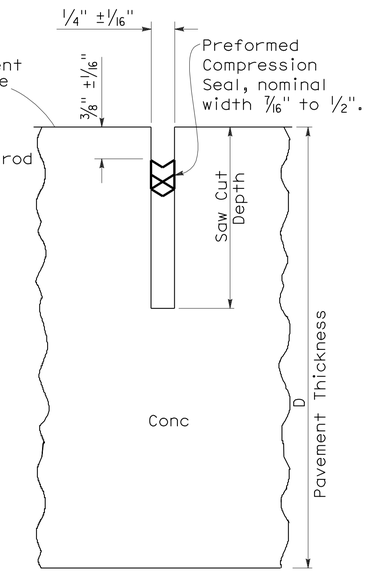


COMPRESSION SEAL

## TYPE B

Longitudinal or Transverse Contraction Joint

### LIQUID SEALANT RESERVOIR DEPTH

| LIQUID SEALANT MATERIAL | 3/8" Joint Width Type A1 | | 1/4" Joint Width Type A2 | | 1/4" Joint Width Type B |
|---|---|---|---|---|---|
| | DIMENSION | | DIMENSION | | DIMENSION |
| | a | b | c | d | e |
| SILCONE | 1" ±1/16" | 5/8" ±1/16" | 15/16" ±1/16" | 9/16" ±1/16" | 9/16" ±1/16" |
| ASPHALT RUBBER | 1 3/16" ±1/16" | 3/4" ±1/16" | 1 1/16" ±1/16" | 11/16" ±1/16" | 11/16" ±1/16" |

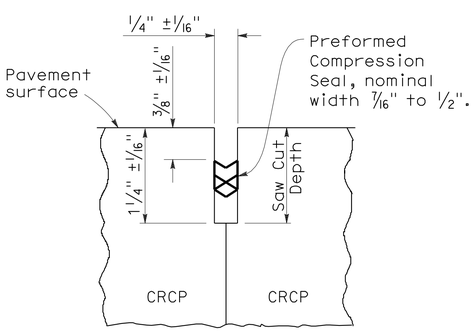


COMPRESSION SEAL

## TYPE C

Transverse and Longitudinal Construction Joints (For CRCP)

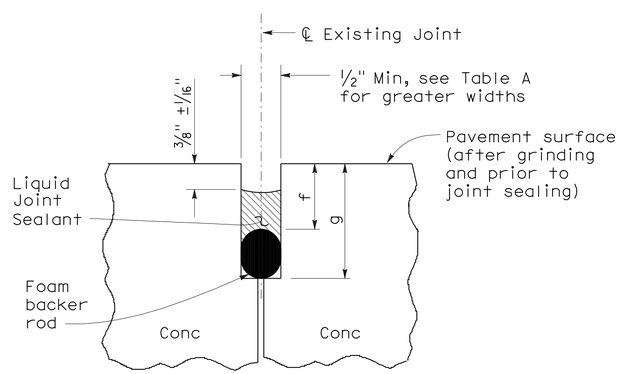


LIQUID SEALANT

## TYPE R

Retrofit Transverse and Longitudinal Joints

### TABLE A (TYPE R JOINT)

| Sawn Joint Width | Backer Rod Diameter ± 1/16" | DIMENSION "f" | DIMENSION "g" |
|---|---|---|---|
| 1" | 1 5/16" | 7/8" | 2 1/4" |
| 7/8" | 1 3/16" | 13/16" | 2" |
| 3/4" | 1" | 3/4" | 1 3/4" |
| 5/8" | 7/8" | 11/16" | 1 1/2" |
| 1/2" | 11/16" | 5/8" | 1 1/4" |

STATE OF CALIFORNIA
DEPARTMENT OF TRANSPORTATION

# CONCRETE PAVEMENT-JOINT DETAILS

NO SCALE

RSP P20 DATED MAY 15, 2009 SUPERSEDES STANDARD PLAN P20
DATED MAY 1, 2006 - PAGE 128 OF THE STANDARD PLANS BOOK DATED MAY 2006.

**REVISED STANDARD PLAN RSP P20**

**2006 REVISED STANDARD PLAN RSP P20**

5-8-09

| DIST | COUNTY | ROUTE | POST MILES TOTAL PROJECT | SHEET NO. | TOTAL SHEETS |
|---|---|---|---|---|---|
| 12 | Ora | 22 | R8.8/R9.1 | 27 | 42 |

William K. Farnbach
REGISTERED CIVIL ENGINEER

May 15, 2009
PLANS APPROVAL DATE

REGISTERED PROFESSIONAL ENGINEER
William K. Farnbach
No. C49042
Exp. 9-30-10
CIVIL
STATE OF CALIFORNIA

*The State of California or its officers or agents shall not be responsible for the accuracy or completeness of electronic copies of this plan sheet.*

*To accompany plans dated* 3-7-11

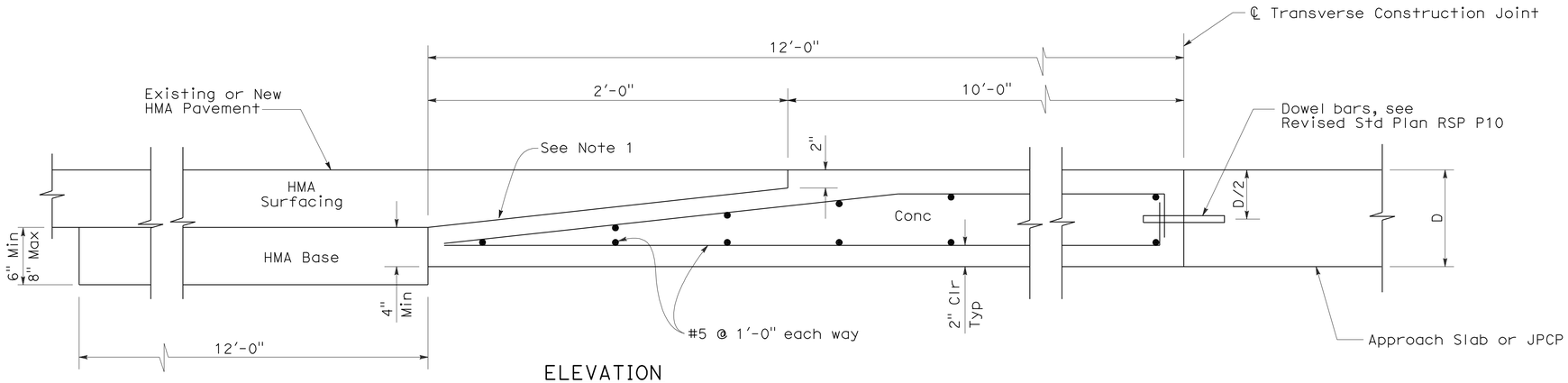


ELEVATION

## CONCRETE PAVEMENT TO HOT MIXED ASPHALT PAVEMENT TRANSITION PANEL

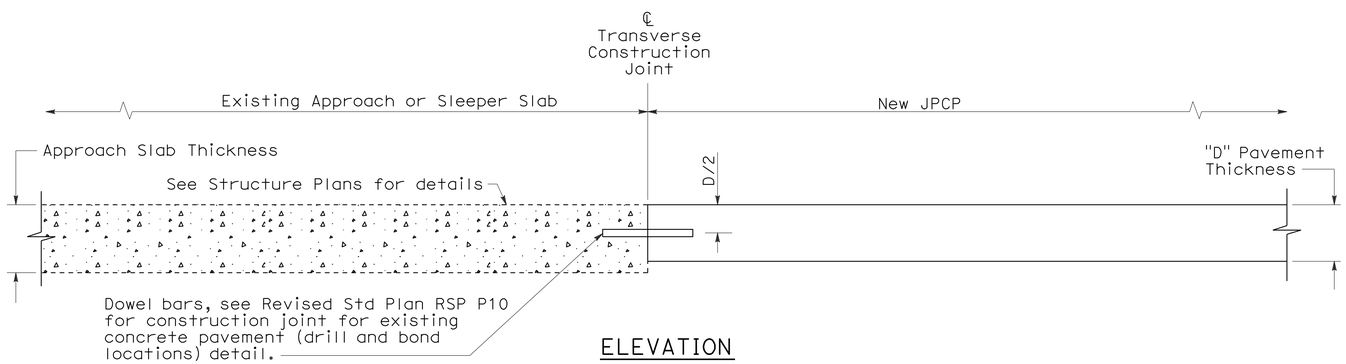


ELEVATION

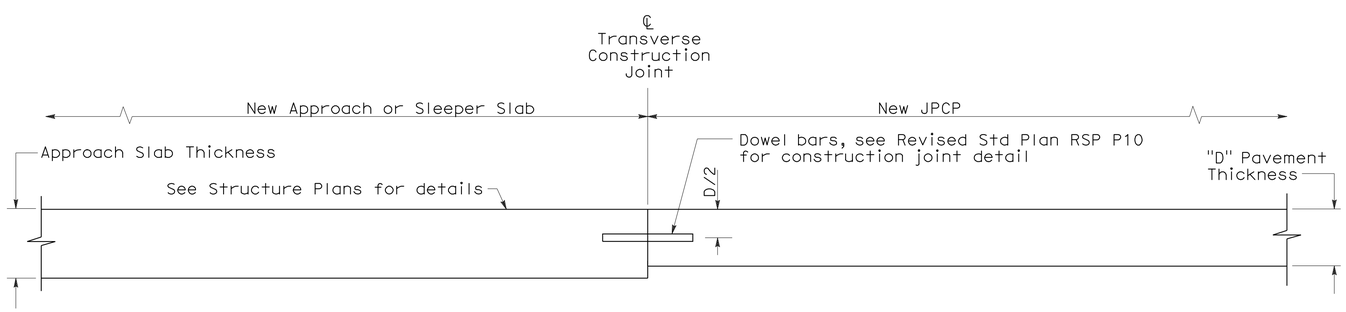


ELEVATION

## CONCRETE PAVEMENT TRANSITION TO APPROACH OR SLEEPER SLAB

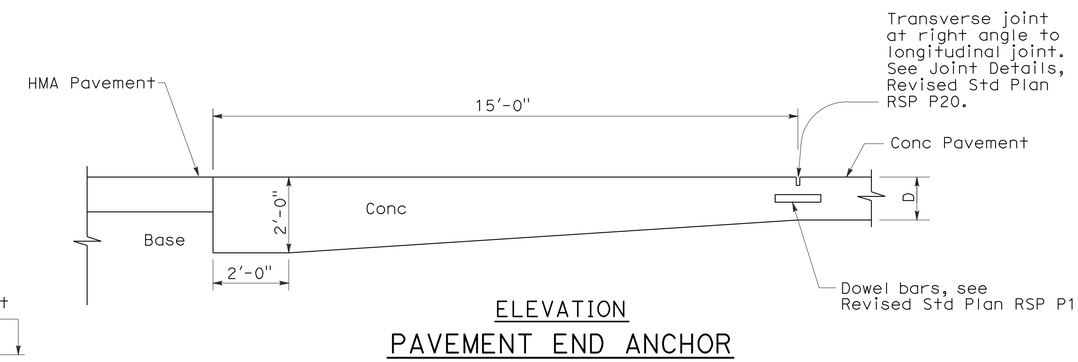


ELEVATION

## PAVEMENT END ANCHOR

NOTE:

1. Heavy broom finish.

STATE OF CALIFORNIA
DEPARTMENT OF TRANSPORTATION

# JOINTED PLAIN CONCRETE PAVEMENT-END PANEL PAVEMENT TRANSITIONS

NO SCALE

RSP P30 DATED MAY 15, 2009 SUPERSEDES STANDARD PLAN P30
DATED MAY 1, 2006 - PAGE 129 OF THE STANDARD PLANS BOOK DATED MAY 2006.

**REVISED STANDARD PLAN RSP P30**

**2006 REVISED STANDARD PLAN RSP P30**

5-8-09

| DIST | COUNTY | ROUTE | POST MILES TOTAL PROJECT | SHEET NO. | TOTAL SHEETS |
|---|---|---|---|---|---|
| 12 | Ora | 22 | R8.8/R9.1 | 28 | 42 |

LICENSED LANDSCAPE ARCHITECT

June 5, 2009
PLANS APPROVAL DATE

LICENSED LANDSCAPE ARCHITECT
Gregory A. Balzer 2576
10 January 2-28-11 Renewal Date
5-14-09 Date
STATE OF CALIFORNIA

*The State of California or its officers or agents shall not be responsible for the accuracy or completeness of electronic copies of this plan sheet.*

*To accompany plans dated* 3-7-11

## A

| | |
|---|---|
| AB | aggregate base |
| ABS | acrylonitrile-butadiene-styrene |
| AC | asphalt concrete |
| Adj | adjacent/adjustable |
| AIC | auxiliary irrigation controller |
| Alt | alternative |
| AMEND | amendment |
| ARV | air release valve |
| AUTO | automatic |
| AUX | auxiliary |
| AVB | atmospheric vacuum breaker |

## B

| | |
|---|---|
| B&B | balled and burlapped |
| B/B | brass/bronze |
| B/B/PL | brass/bronze/plastic |
| B/PL | brass/plastic |
| BFM | bonded fiber matrix |
| Bit Ctd | bituminous coated |
| BP | booster pump |
| BPA | backflow preventer assembly |
| BPAE | backflow preventer assembly in enclosure |
| BPE | backflow preventer enclosure |
| BV | ball valve |

## C

| | |
|---|---|
| CAP | corrugated aluminum pipe |
| CARV | combination air release valve |
| CCA | cam coupler assembly |
| CEC | controller enclosure cabinet |
| CHDPE | corrugated high density polyethylene |
| CL | chain link |
| CNC | control and neutral conductors |
| Conc | concrete |
| Cond | conduit |
| CSP | corrugated steel pipe |
| CST | center strip |
| CV | check valve |

## D

| | |
|---|---|
| Dia | diameter |
| DIP | ductile iron pipe |
| DN | diameter nominal |

## E

| | |
|---|---|
| EA | each |
| Elect | electric/electrical |
| Elev | elevation |
| ENCL | enclosure |
| EP | edge of pavement |
| ES | edge of shoulder |
| EST | end strip |
| ESTB | establishment |
| ETW | edge of traveled way |

## F

| | |
|---|---|
| F | full circle |
| F/P | full/part circle |
| FAU | filter assembly unit |
| FCV | flow control valve |
| FERT | fertilizer |
| FG | finished grade |
| FIPT | female iron pipe thread |
| FIS | fertilizer injector system |
| FL | flow line |
| FM | flow monitor |
| FS | flow sensor |
| Ft | foot/feet |
| FV | flush valve |

## G

| | |
|---|---|
| GAL | Gallon(s) |
| Galv | galvanized |
| GARV | garden valve |
| GPH | gallons per hour |
| GPM | gallons per minute |
| GSP | galvanized steel pipe |
| GV | gate valve |

## H

| | |
|---|---|
| H | half circle |
| HB | hose bib |
| HDPE | high density polyethylene |
| HP | horsepower/hinge point |
| HPL | high pressure line |
| Hwy | highway |

## I

| | |
|---|---|
| IC | irrigation controller |
| ICC | irrigation controller(s) in controller enclosure cabinet |
| ID | inside diameter |
| In | inches |
| IFS | irrigation filtration system |
| IPS | iron pipe size |
| IPT | iron pipe thread |
| Irr | irrigation |

## L

| | |
|---|---|
| L | length |
| LF | linear foot |

## M

| | |
|---|---|
| Max | maximum |
| MBGR | metal beam guard railing |
| MCV | manual control valve |
| MIC | master irrigation controller |
| Min | minimum |
| MIPT | male iron pipe thread |
| Misc | miscellaneous |
| Mtl | material |
| MVP | maintenance vehicle pullout |

## N

| | |
|---|---|
| NCN | no common name |
| NL | nozzle line |
| No. | number |
| NPT | national pipe thread |

## O

| | |
|---|---|
| O/C | on center |
| OD | outside diameter |
| Oz | ounce |

## P

| | |
|---|---|
| P | part circle |
| PB | pull box |
| PCC | portland cement concrete |
| PE | polyethylene |
| Pkt | packet |
| PL | plastic |
| PLT | plant/planting |
| PLT ESTB | plant establishment |
| PM | post mile |
| PR | pressure rated |
| PRLV | pressure relief valve |
| PSFM | polymer stabilized fiber matrix |
| PSI | pounds per square inch |
| PRV | pressure reducing valve |
| PVC | polyvinyl chloride |
| Pvmt | pavement |

## Q

| | |
|---|---|
| Q | quarter circle |
| QCV | quick coupling valve |

## R

| | |
|---|---|
| R | radius |
| RCP | reinforced concrete pipe |
| RCV | remote control valve |
| RCVM | remote control valve (master) |
| RCVMF | remote control valve (master) w/ flow meter |
| RCW | recycled/reclaimed water |
| RECP | rolled erosion control product |
| REQ | required |
| R/W | right of way |

## S

| | |
|---|---|
| S | slip |
| SCC | sprinkler control conduit |
| SCH | schedule |
| SF | state-furnished |
| Shld | shoulder |
| SQFT | square foot/feet |
| SQYD | square yard(s) |
| SST | side strip |
| Sta | station |
| Std | standard |
| SW | sidewalk/sound wall |

## T

| | |
|---|---|
| T | third circle/thread |
| TLS | truck loading standpipe |
| TQ | three quarter circle |
| TRM | turf reinforcement mat |
| TRVD | traveled |
| TT | two third circle |
| Typ | typical |

## U

| | |
|---|---|
| UG | underground |

## V

| | |
|---|---|
| VAU | valve assembly unit |

## W

| | |
|---|---|
| W | width |
| W/ | with |
| WM | water meter |
| WS | wye strainer |
| WSP | welded steel pipe |
| WWM | welded wire mesh |

NOTE:

FOR ADDITIONAL ABBREVIATIONS, SEE STANDARD PLANS A10A AND A10B.

STATE OF CALIFORNIA
DEPARTMENT OF TRANSPORTATION

# PLANTING AND IRRIGATION ABBREVIATIONS

NO SCALE

RSP H1 DATED JUNE 5, 2009 SUPERSEDES STANDARD PLAN H1
DATED MAY 1, 2006 - PAGE 201 OF THE STANDARD PLANS BOOK DATED MAY 2006.

**REVISED STANDARD PLAN RSP H1**

**2006 REVISED STANDARD PLAN RSP H1**

| DIST | COUNTY | ROUTE | POST MILES TOTAL PROJECT | SHEET NO. | TOTAL SHEETS |
|---|---|---|---|---|---|
| 12 | Ora | 22 | R8.8/R9.1 | 29 | 42 |

LICENSED LANDSCAPE ARCHITECT

June 5, 2009
PLANS APPROVAL DATE

*The State of California or its officers or agents shall not be responsible for the accuracy or completeness of electronic copies of this plan sheet.*

LICENSED LANDSCAPE ARCHITECT — Gregory A. Balzer — 2516 — 10 January 2-28-11 Renewal Date — 5-14-09 Date — STATE OF CALIFORNIA

*To accompany plans dated* 3-7-11

| EXISTING | PROPOSED | ITEM DESCRIPTION |
|---|---|---|
| | | WATER METER (WM) |
| | | BACKFLOW PREVENTER ASSEMBLY (BPA) |
| | | BACKFLOW PREVENTER ASSEMBLY IN ENCLOSURE (BPAE) |
| | | BACKFLOW PREVENTER ENCLOSURE (BPE) |
| | | BOOSTER PUMP (BP) |
| | | TRUCK LOADING STANDPIPE (TLS) |
| FS | FS | FLOW SENSOR (FS) |
| X | X | MASTER IRRIGATION CONTROLLER (MIC) |
| | | AUXILIARY IRRIGATION CONTROLLER (AIC) |
| | | IRRIGATION CONTROLLER (IC)/ IRRIGATION CONTROLLER (IC) (BATTERY) IRRIGATION CONTROLLER (IC) (SOLAR) |
| | | IRRIGATION CONTROLLER(S) IN CONTROLLER ENCLOSURE CABINET (ICC) |
| | | CONTROL AND NEUTRAL CONDUCTORS (CNC) |
| SCC | SCC | SPRINKLER CONTROL CONDUIT (SCC) |
| | | IRRIGATION CROSSOVER |
| | | EXTEND IRRIGATION CROSSOVER |
| | | IRRIGATION SLEEVE |
| dip | DIP | DUCTILE IRON PIPE (SUPPLY LINE) (MAIN) (DIP) |
| | | GALVANIZED STEEL PIPE (SUPPLY LINE) (MAIN) (GSP) |
| | | GALVANIZED STEEL PIPE (SUPPLY LINE) (LATERAL) (GSP) |
| | | PLASTIC PIPE (PR 200) (SUPPLY LINE) (MAIN) |
| | | PLASTIC PIPE (PR 200) (SUPPLY LINE) (LATERAL) |
| | | PLASTIC PIPE (IRRIGATION LINE) |
| | | REMOTE CONTROL VALVE (RCV) REMOTE CONTROL VALVE (MASTER) (RCVM) REMOTE CONTROL VALVE (MASTER) W/FLOW METER (RCVMF) |
| | | MANUAL CONTROL VALVE (MCV) |
| | | VALVE ASSEMBLY UNIT (VAU) |
| | | WYE STRAINER (WS) |
| | | FILTER ASSEMBLY UNIT (FAU) |
| | | GATE VALVE (GV) |
| | | BALL VALVE (BV) |

| EXISTING | PROPOSED | ITEM DESCRIPTION |
|---|---|---|
| | | QUICK COUPLING VALVE (QCV) |
| | | CAM COUPLER ASSEMBLY (CCA) |
| | | PRESSURE REDUCING VALVE (PRV) |
| | | PRESSURE RELIEF VALVE (PRLV) |
| | | FLOW CONTROL VALVE (FCV) |
| | | COMBINATION AIR RELEASE VALVE (CARV) |
| | | CHECK VALVE (CV) |
| | | FLUSH VALVE (FV) |
| | | NOZZLE LINE W/TURNING UNION |
| | | IRRIGATION SYSTEM |
| | | IRRIGATION SYSTEM TO BE REMOVED |
| | | CHAIN LINK GATE |
| | | QUICK COUPLING VALVE W/SPRINKLER PROTECTOR |
| 3 | 3 | SPRINKLER W/SPRINKLER PROTECTOR |
| | C | CONNECT TO EXISTING SYSTEM |
| | | CAP |
| | | CAP EXISTING |

## VALVE CODE

RCV SIZE
IRRIGATION CONTROLLER
CONTROLLER STATION
VALVE IN PARALLEL (IF APPLICABLE)
GPM
QUANTITY OF SPRINKLERS (WHEN SHOWN)

* 2½"-A-2b-40 -60

MCV SIZE
VALVE NUMBER
GPM
QUANTITY OF TYPE SPRINKLERS (WHEN SHOWN)

* 2"-3-30 -50

* VALVE CODES FOR EXISTING VALVES ARE SHOWN IN A DASHED ENCLOSURE.

STATE OF CALIFORNIA
DEPARTMENT OF TRANSPORTATION

# PLANTING AND IRRIGATION SYMBOLS

NO SCALE

RSP H2 DATED JUNE 5, 2009 SUPERSEDES RSP H2 DATED MARCH 7, 2008 AND STANDARD PLAN H2 DATED MAY 1, 2006 - PAGE 202 OF THE STANDARD PLANS BOOK DATED MAY 2006.

**REVISED STANDARD PLAN RSP H2**

**2006 REVISED STANDARD PLAN RSP H2**

5-11-09

| DIST | COUNTY | ROUTE | POST MILES TOTAL PROJECT | SHEET NO. | TOTAL SHEETS |
|---|---|---|---|---|---|
| 12 | Ora | 22 | R8.8/R9.1 | 30 | 42 |

LICENSED LANDSCAPE ARCHITECT

June 5, 2009
PLANS APPROVAL DATE

*The State of California or its officers or agents shall not be responsible for the accuracy or completeness of electronic copies of this plan sheet.*

LICENSED LANDSCAPE ARCHITECT
Gregory A. Balzer 2516
10-28-11
Renewal Date
5-14-09
Date
STATE OF CALIFORNIA

*To accompany plans dated* 3-7-11

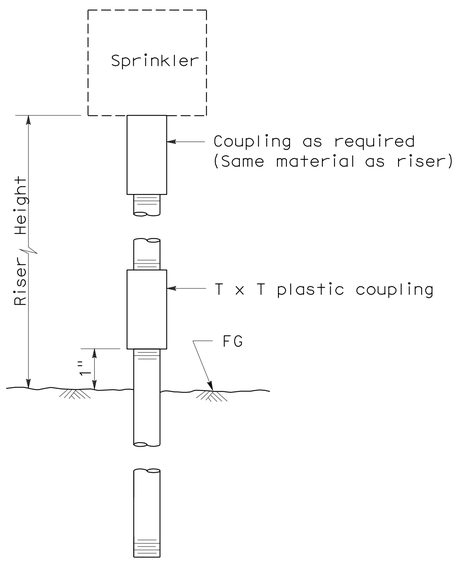


ELEVATION
RISER TYPE I

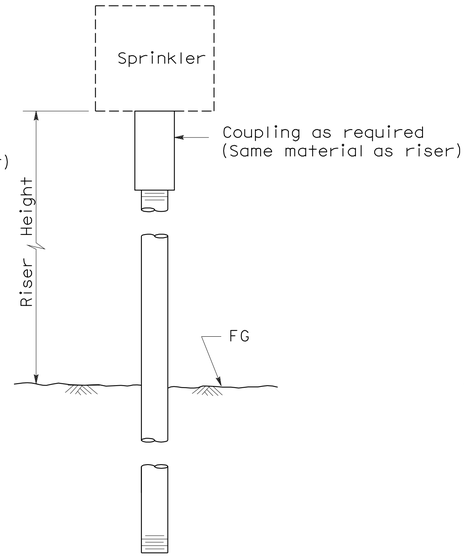


ELEVATION
RISER TYPE II

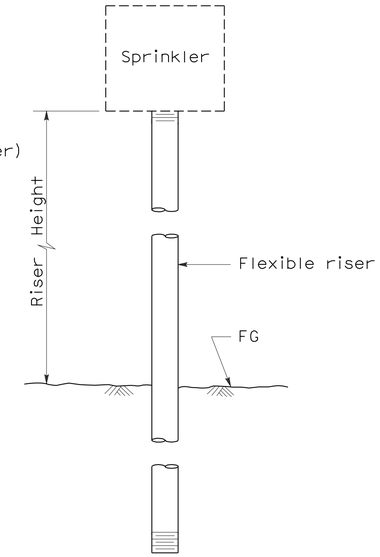


ELEVATION
RISER TYPE III

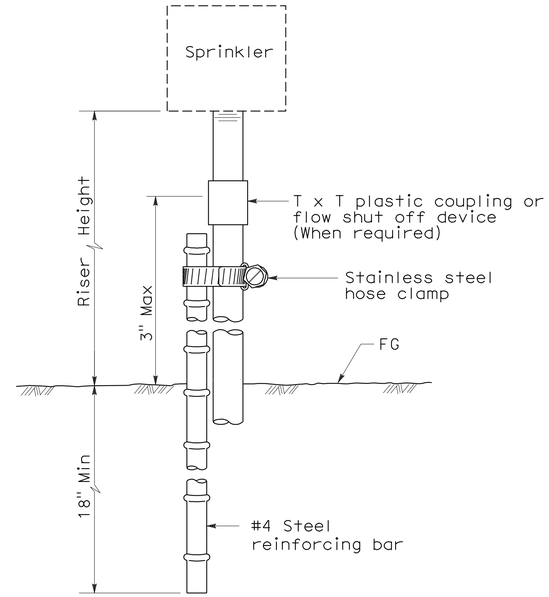


ELEVATION
RISER TYPE IV

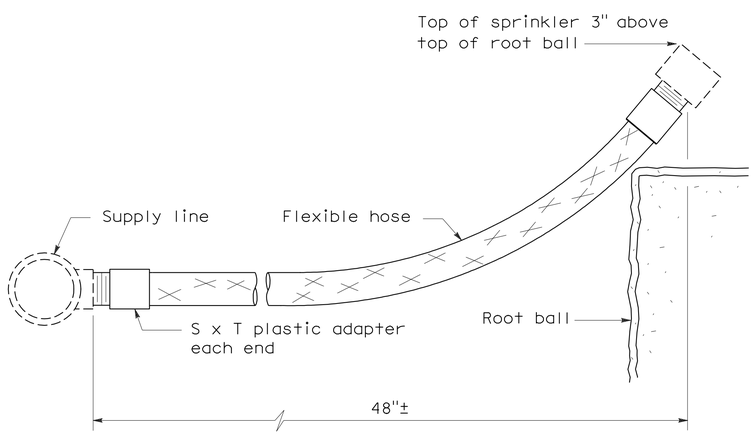


ELEVATION
RISER TYPE V

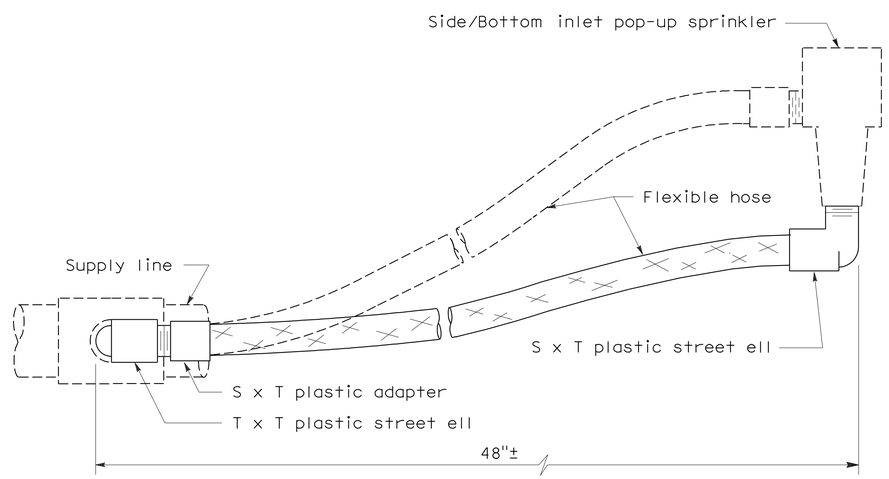


ELEVATION
RISER TYPE VI

STATE OF CALIFORNIA
DEPARTMENT OF TRANSPORTATION

# PLANTING AND IRRIGATION DETAILS

NO SCALE

RSP H5 DATED JUNE 5, 2009 SUPERSEDES STANDARD PLAN H5
DATED MAY 1, 2006 - PAGE 205 OF THE STANDARD PLANS BOOK DATED MAY 2006.

**REVISED STANDARD PLAN RSP H5**

**2006 REVISED STANDARD PLAN RSP H5**

5-28-09

| DIST | COUNTY | ROUTE | POST MILES TOTAL PROJECT | SHEET NO. | TOTAL SHEETS |
|---|---|---|---|---|---|
| 12 | Ora | 22 | R8.8/R9.1 | 31 | 42 |

Gregory A. Balzer
LICENSED LANDSCAPE ARCHITECT

June 5, 2009
PLANS APPROVAL DATE

LICENSED LANDSCAPE ARCHITECT Gregory A. Balzer 2576 STATE OF CALIFORNIA
10 January 2-28-11 Renewal Date 5-14-09 Date

*The State of California or its officers or agents shall not be responsible for the accuracy or completeness of electronic copies of this plan sheet.*

*To accompany plans dated* 3-7-11

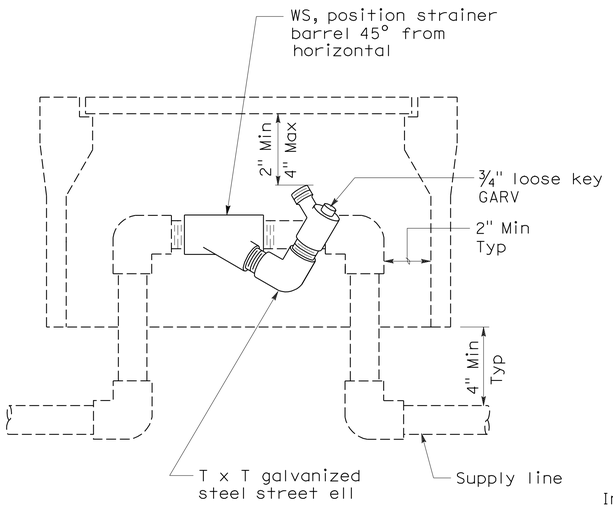


ELEVATION
## WYE STRAINER

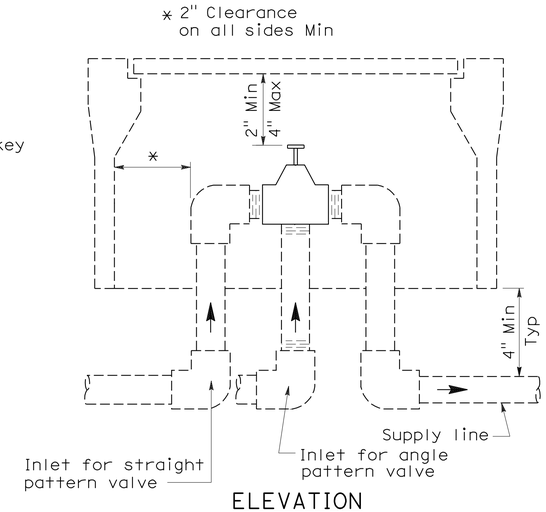


ELEVATION
## VALVE

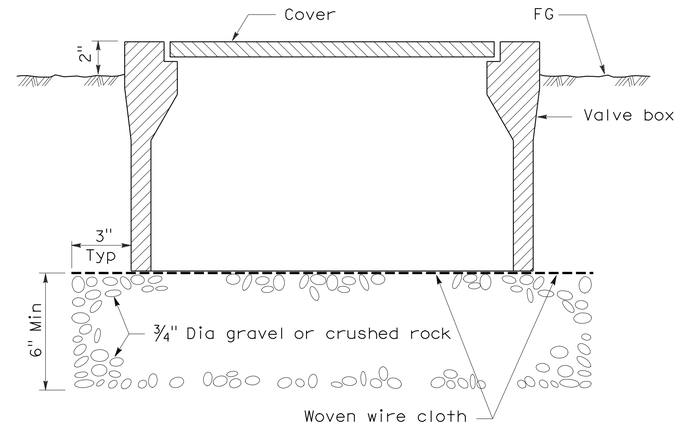


SECTION
## VALVE BOX

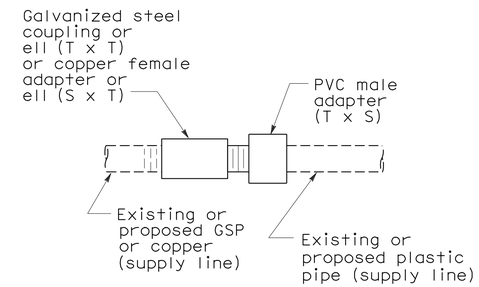


PLAN
## GALVANIZED OR COPPER PIPE CONNECTION TO PLASTIC PIPE

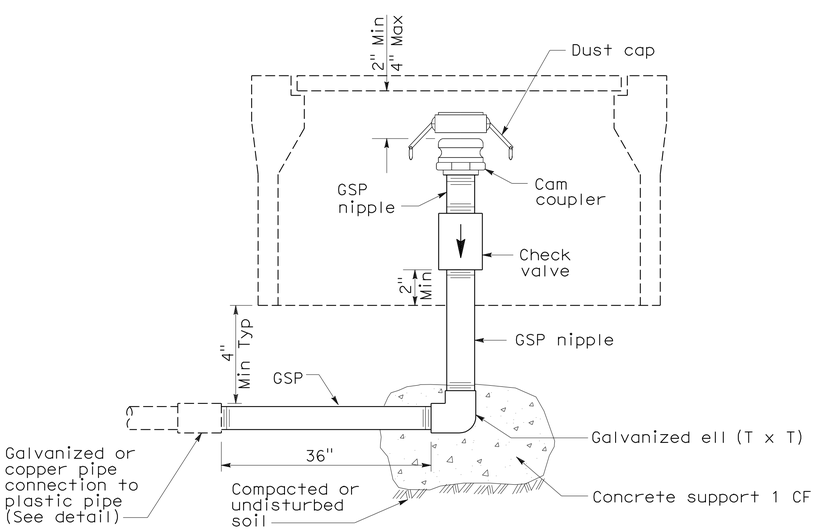


ELEVATION
## CAM COUPLER ASSEMBLY

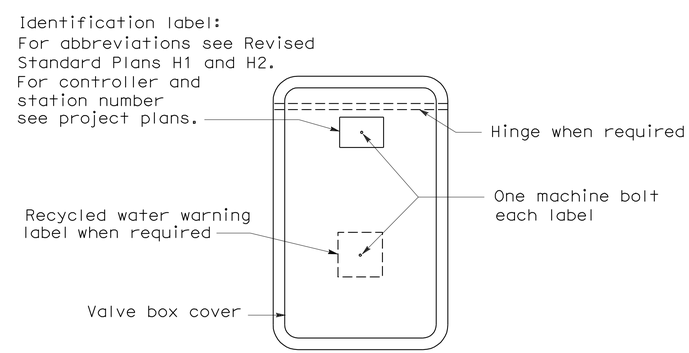


PLAN

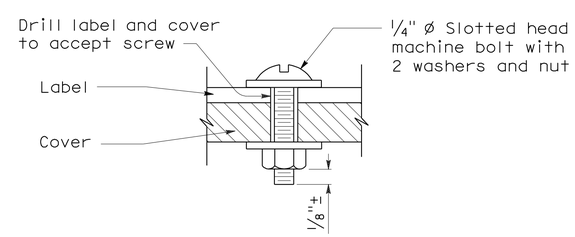


SECTION
## VALVE BOX IDENTIFICATION

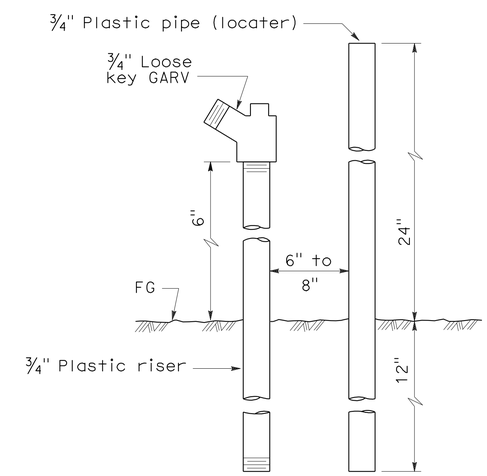


ELEVATION
## FLUSH VALVE

STATE OF CALIFORNIA
DEPARTMENT OF TRANSPORTATION

# PLANTING AND IRRIGATION DETAILS

NO SCALE

RSP H7 DATED JUNE 5, 2009 SUPERSEDES STANDARD PLAN H7
DATED MAY 1, 2006 - PAGE 207 OF THE STANDARD PLANS BOOK DATED MAY 2006.

**REVISED STANDARD PLAN RSP H7**

**2006 REVISED STANDARD PLAN RSP H7**

| DIST | COUNTY | ROUTE | POST MILES TOTAL PROJECT | SHEET NO. | TOTAL SHEETS |
|---|---|---|---|---|---|
| 12 | Ora | 22 | R8.8/R9.1 | 32 | 42 |

Gregory A. Balzer
LICENSED LANDSCAPE ARCHITECT

June 5, 2009
PLANS APPROVAL DATE

LICENSED LANDSCAPE ARCHITECT — Gregory A. Balzer — 2516 — Expiration 2-28-11 (Renewal Date) — 5-14-09 (Date) — STATE OF CALIFORNIA

*The State of California or its officers or agents shall not be responsible for the accuracy or completeness of electronic copies of this plan sheet.*

*To accompany plans dated* 3-7-11

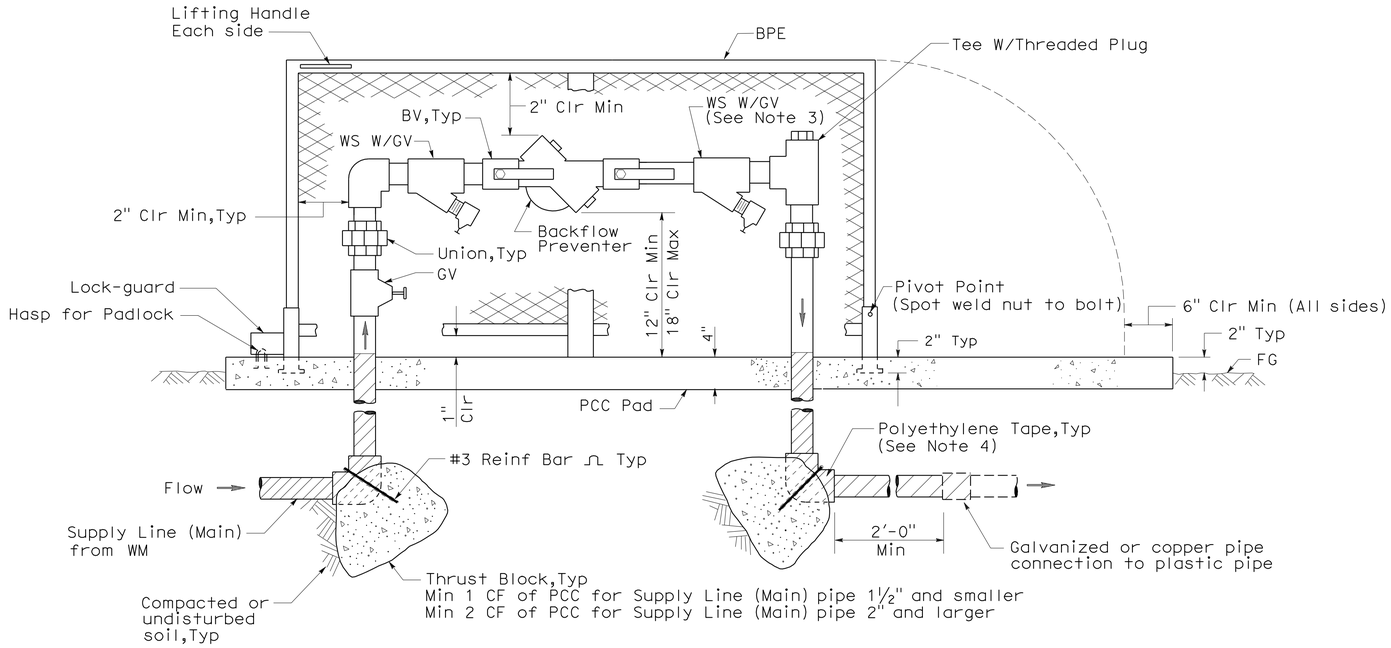


ELEVATION

## BACKFLOW PREVENTER ASSEMBLY IN ENCLOSURE (ONE PIECE)

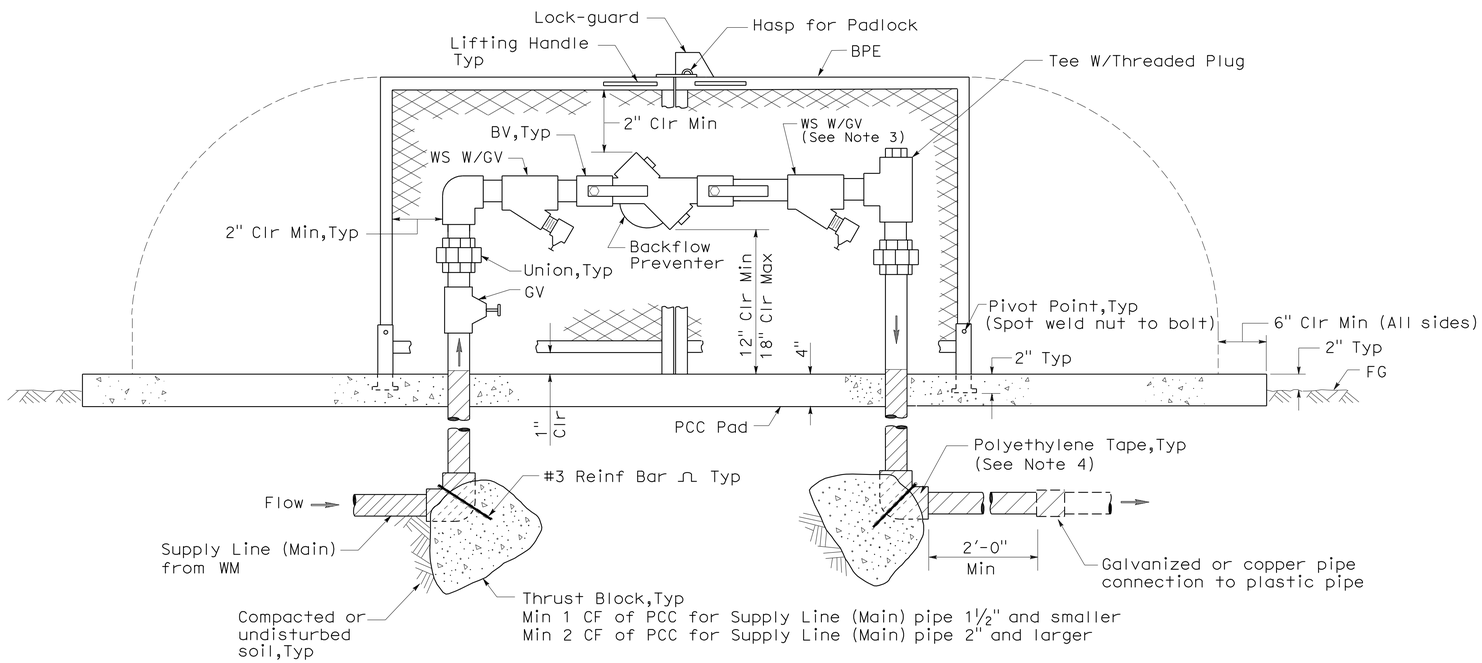


ELEVATION

## BACKFLOW PREVENTER ASSEMBLY IN ENCLOSURE (TWO PIECE)

NOTES:

1. Wye strainer and fittings must be the same size as the backflow preventer shown on the plans.
2. Backflow preventer assembly manifold pipe must be the same pipe as the supply line (main) pipe to be installed from the water meter to the backflow preventer assembly.
3. Wye strainer location shown downstream of the backflow preventer is for District 11 projects only.
4. All metal in contact with soil and Portland Cement Concrete must be polyethylene wrapped using 2" wide plastic backed adhesive tape 20 mil thick with ½" overlap.

STATE OF CALIFORNIA
DEPARTMENT OF TRANSPORTATION

# PLANTING AND IRRIGATION DETAILS

NO SCALE

RSP H8 DATED JUNE 5, 2009 SUPERSEDES STANDARD PLAN H8
DATED MAY 1, 2006 - PAGE 208 OF THE STANDARD PLANS BOOK DATED MAY 2006.

**REVISED STANDARD PLAN RSP H8**

**2006 REVISED STANDARD PLAN RSP H8**

5-28-09

| DIST | COUNTY | ROUTE | POST MILES TOTAL PROJECT | SHEET NO. | TOTAL SHEETS |
|---|---|---|---|---|---|
| 12 | Ora | 22 | R8.8/R9.1 | 33 | 42 |

Randell D. Hiatt
REGISTERED CIVIL ENGINEER

June 6, 2008
PLANS APPROVAL DATE

REGISTERED PROFESSIONAL ENGINEER
Randell D. Hiatt
No. C50200
Exp. 6-30-09
CIVIL
STATE OF CALIFORNIA

*The State of California or its officers or agents shall not be responsible for the accuracy or completeness of electronic copies of this plan sheet.*

*To accompany plans dated* 3-7-11

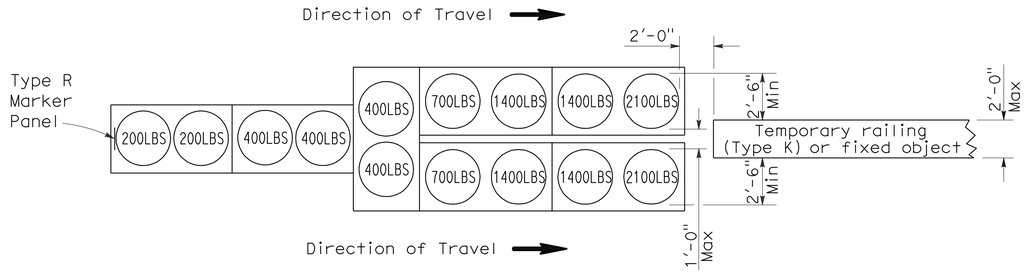


## ARRAY 'TU14'

Approach speed 45 mph or more

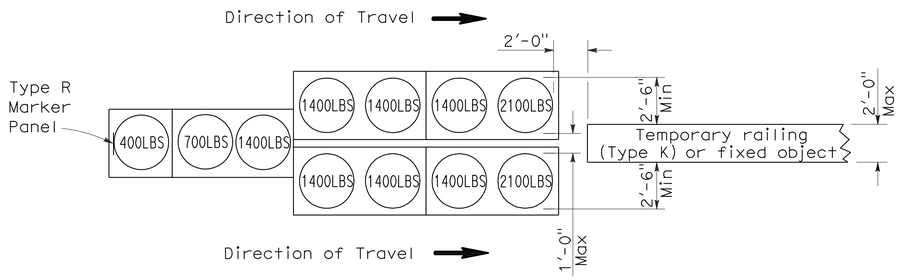


## ARRAY 'TU11'

Approach speed less than 45 mph

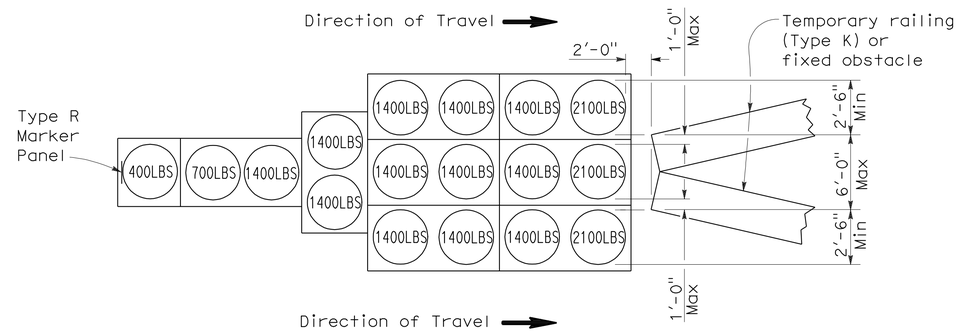


## ARRAY 'TU17'

Approach speed less than 45 mph

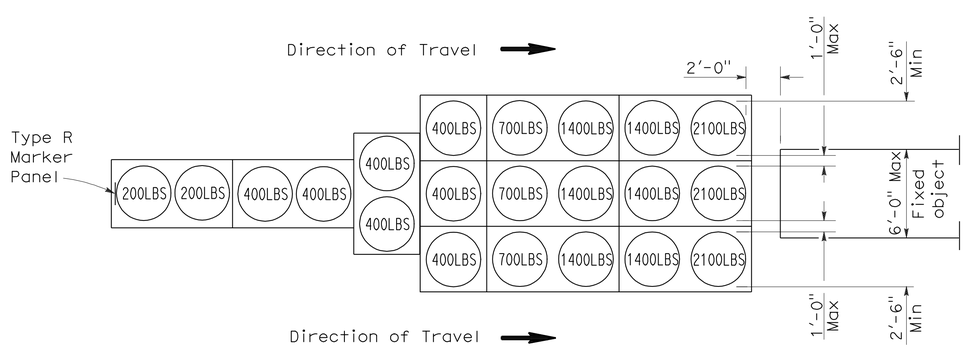


## ARRAY 'TU21'

Approach speed 45 mph or more

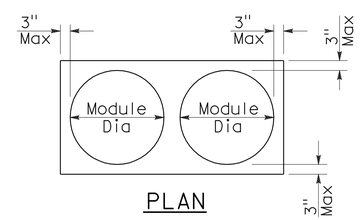


PLAN

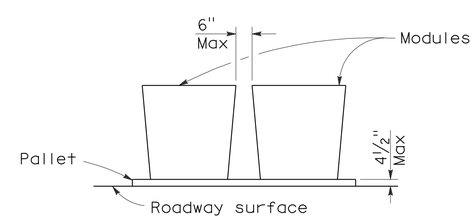


ELEVATION

## CRASH CUSHION PALLET DETAIL

See Note 7

## NOTES:

1. (XXX) Indicates sand filled module location and weight of sand in pounds for each module. Module spacing is based on the greater diameter of the module.
2. All sand weights are nominal.
3. Temporary crash cushion arrays shall not encroach on the traveled way.
4. Place the top of Type R marker panel 1" below the module lid.
5. Refer to Standard Plan A73B for marker details.
6. Approach speeds indicated conform to NCHRP 350 Report criteria.
7. Use of pallets is optional.

STATE OF CALIFORNIA
DEPARTMENT OF TRANSPORTATION

# TEMPORARY CRASH CUSHION, SAND FILLED (UNIDIRECTIONAL)

NO SCALE

RSP T1A DATED JUNE 6, 2008 SUPERSEDES STANDARD PLAN T1A
DATED MAY 1, 2006 - PAGE 211 OF THE STANDARD PLANS BOOK DATED MAY 2006.

**REVISED STANDARD PLAN RSP T1A**

**2006 REVISED STANDARD PLAN RSP T1A**

| DIST | COUNTY | ROUTE | POST MILES TOTAL PROJECT | SHEET NO. | TOTAL SHEETS |
|---|---|---|---|---|---|
| 12 | Ora | 22 | R8.8/R9.1 | 34 | 42 |

Randell D. Hiatt
REGISTERED CIVIL ENGINEER

June 6, 2008
PLANS APPROVAL DATE

REGISTERED PROFESSIONAL ENGINEER
Randell D. Hiatt
No. C50200
Exp. 6-30-09
CIVIL
STATE OF CALIFORNIA

*The State of California or its officers or agents shall not be responsible for the accuracy or completeness of electronic copies of this plan sheet.*

*To accompany plans dated* 3-7-11

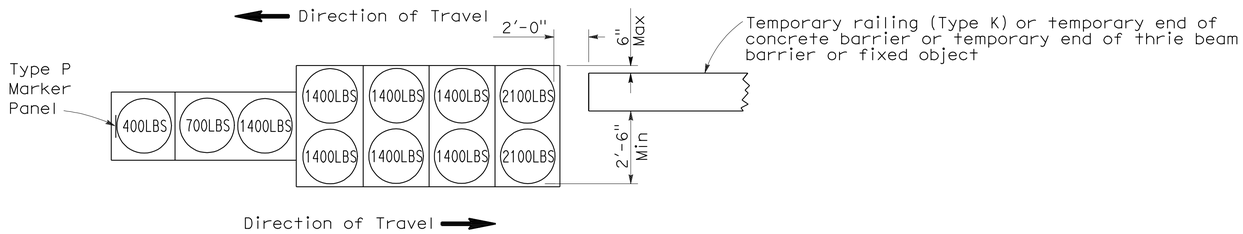


ARRAY 'TB11'

Approach speed less than 45 mph

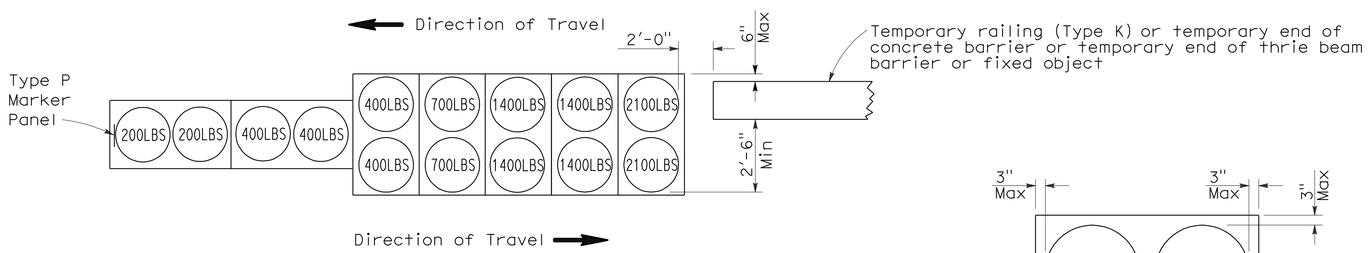


ARRAY 'TB14'

Approach speed 45 mph or more

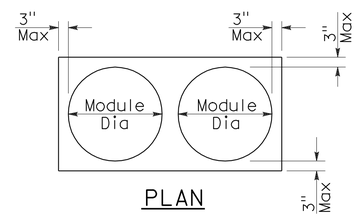


PLAN

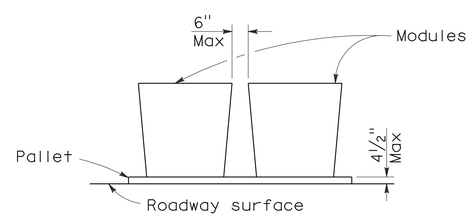


ELEVATION

CRASH CUSHION PALLET DETAIL

See Note 7

NOTES:

1. (XXX) Indicates sand filled module location and weight of sand in pounds for each module. Module spacing is based on the greater diameter of the module.
2. All sand weights are nominal.
3. Temporary crash cushion arrays shall not encroach on the traveled way.
4. Place the Type P marker panel so that the bottom of the panel rests upon the pallet.
5. Refer to Standard Plan A73B for marker details.
6. Approach speeds indicated conform to NCHRP 350 Report criteria.
7. Use of pallets is optional.

STATE OF CALIFORNIA
DEPARTMENT OF TRANSPORTATION

# TEMPORARY CRASH CUSHION, SAND FILLED (BIDIRECTIONAL)

NO SCALE

RSP T1B DATED JUNE 6, 2008 SUPERSEDES STANDARD PLAN T1B
DATED MAY 1, 2006 - PAGE 212 OF THE STANDARD PLANS BOOK DATED MAY 2006.

**REVISED STANDARD PLAN RSP T1B**

**2006 REVISED STANDARD PLAN RSP T1B**

5-15-08

| DIST | COUNTY | ROUTE | POST MILES TOTAL PROJECT | SHEET NO. | TOTAL SHEETS |
|---|---|---|---|---|---|
| 12 | Ora | 22 | R8.8/R9.1 | 35 | 42 |

Randell D. Hiatt
REGISTERED CIVIL ENGINEER

June 6, 2008
PLANS APPROVAL DATE

REGISTERED PROFESSIONAL ENGINEER
Randell D. Hiatt
No. C50200
Exp. 6-30-09
CIVIL
STATE OF CALIFORNIA

*The State of California or its officers or agents shall not be responsible for the accuracy or completeness of electronic copies of this plan sheet.*

*To accompany plans dated* 3-7-11

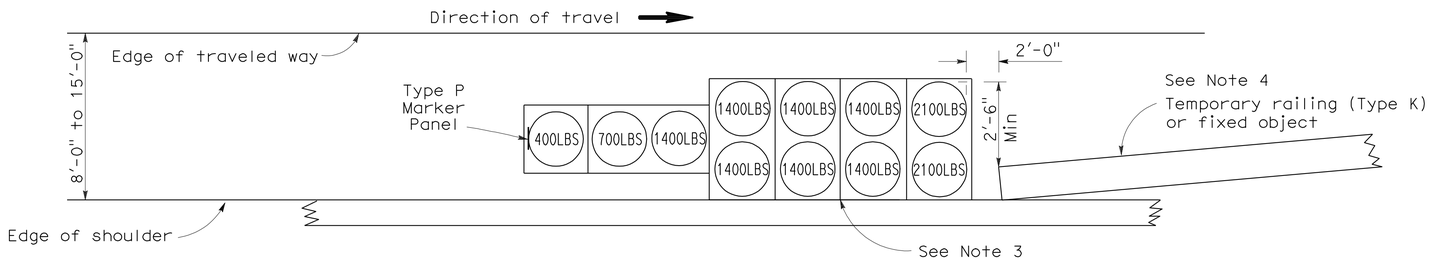


## ARRAY 'TS11'

Approach speed less than 45 mph
See Note 9

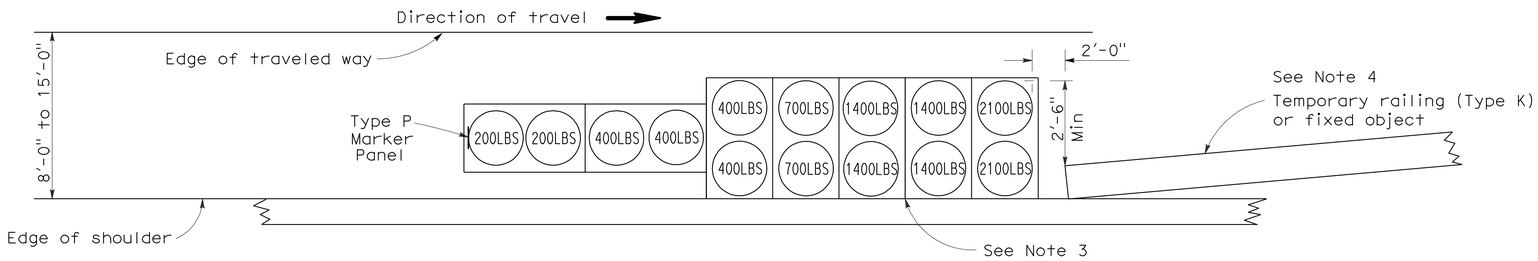


## ARRAY 'TS14'

Approach speed 45 mph or more
See Note 9

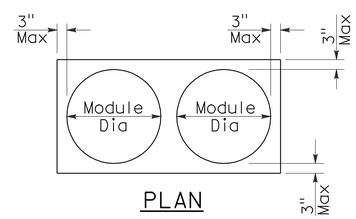


PLAN

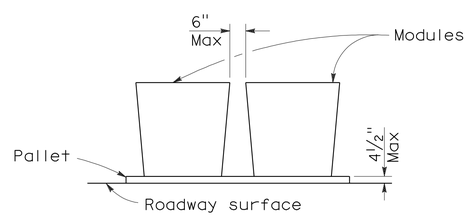


ELEVATION

## CRASH CUSHION PALLET DETAIL

See Note 11

## NOTES:

1. (XXX) Indicates sand filled module location and weight of sand in pounds for each module. Module spacing is based on the greater diameter of the module.
2. All sand weights are nominal.
3. The temporary crash cushion arrays shown on this plan shall be used only in locations where there will be traffic on one side of the temporary crash cushion array.
4. If the fixed object or approach end of the temporary railing is less than 15'-0" from the edge of traveled way, a temporary crash cushion is required in a construction or work zone.
5. Temporary crash cushion arrays shall not encroach on the traveled way.
6. Arrays for median shoulders shall conform to details shown on this plan for outside shoulders.
7. Place the Type P marker panel so that the bottom of the panel rests upon the pallet and faces traffic.
8. Refer to Standard Plan A73B for marker details.
9. For shoulder widths less than 8'-0", appropriate approved crash cushion protection, other than sand filled modules, shall be provided at fixed objects and at approach ends of temporary railing. The specific type of crash cushion shall be as shown on the project plans or as specified in the Special Provisions, or if not shown on the project plans or specified in the Special Provisions, shall be as approved by the Engineer.
10. Approach speeds indicated conform to NCHRP 350 Report criteria.
11. Use of pallets is optional.

STATE OF CALIFORNIA
DEPARTMENT OF TRANSPORTATION

# TEMPORARY CRASH CUSHION, SAND FILLED (SHOULDER INSTALLATIONS)

NO SCALE

RSP T2 DATED JUNE 6, 2008 SUPERSEDES STANDARD PLAN T2
DATED MAY 1, 2006 - PAGE 213 OF THE STANDARD PLANS BOOK DATED MAY 2006.

**REVISED STANDARD PLAN RSP T2**

**2006 REVISED STANDARD PLAN RSP T2**

| DIST | COUNTY | ROUTE | POST MILES TOTAL PROJECT | SHEET NO. | TOTAL SHEETS |
|---|---|---|---|---|---|
| 12 | Ora | 22 | R8.8/R9.1 | 36 | 42 |

REGISTERED ELECTRICAL ENGINEER

October 5, 2007
PLANS APPROVAL DATE

REGISTERED PROFESSIONAL ENGINEER Jeffery G. McRae No. E14512 Exp. 6-30-08 ELECTRICAL STATE OF CALIFORNIA

*The State of California or its officers or agents shall not be responsible for the accuracy or completeness of electronic copies of this plan sheet.*

*To accompany plans dated* 3-7-11

# ELECTROLIERS

| STANDARD TYPES |
|---|
| 15, 15D |
| 15 STRUCTURE |
| 21, 21D STRUCTURE |
| 30 |
| 31 |
| 32 |
| 35 |
| 36-20A |

High mast light pole

Double Arm lighting standard

Existing electrolier

Electrolier foundation (Future installation)

## NOTES:

1. Luminaires shall be 310 W HPS when installed on Type 21, 21D, 30, 31, 32, 35 and 36-20A Standards, unless otherwise specified. Luminaires shall be 200 W HPS when installed on other type standards or poles, unless otherwise specified.
2. Luminaires shall be the cutoff type, ANSI Type Ⅲ medium cutoff lighting distribution, unless otherwise specified.
3. Variations noted adjacent to symbol on project plans.

Electrolier (see project notes or project plans)

Luminaire on wood pole

# STANDARD NOTES:

- AB — Abandon. If applied to conduit, remove conductors.
- BC — Install pull box in existing conduit run.
- BP — Pedestrian barricade, type as indicated on plan.
- CB — Install conduit into existing pull box.
- CC — Connect new and existing conduit. Remove existing conductors and install conductors as indicated.
- CF — Conduit to remain for future use. Remove conductors. Install pull wire or rope.
- DH — Detector handhole.
- FA — Foundation to be abandoned.
- IS — Install sign on signal mast arm.
- NS — No slip base on standard.
- PEC — Photoelectric control.
- PEU — Photoelectric unit.
- RC — Equipment or material to be removed and become the property of the Contractor.
- RE — Remove electrolier, fuses and ballast. Tape ends of conductors.
- RL — Relocate equipment.
- RR — Remove and reuse equipment.
- RS — Remove and salvage equipment.
- SC — Splice new to existing conductors.
- SD — Service disconnect.
- SF — Standard to remain for future use. Remove luminaire, pole conductors, fuses and ballast.
- TSP — Telephone service point.

# ABBREVIATIONS AND EQUIPMENT DESIGNATIONS

| PROPOSED | EXISTING | |
|---|---|---|
| BBS | bbs | Battery backup system |
| BC | bc | Bolt circle |
| C | C | Conduit |
| CCTV | cctv | Closed circuit television |
| CKT | ckt | Circuit |
| CMS | cms | Changeable message sign |
| DLC | dlc | Loop detector lead-in cable |
| EMS | ems | Extinguishable message sign |
| EVC | evc | Emergency vehicle cable |
| EVD | evd | Emergency vehicle detector |
| FB | fb | Flashing beacon |
| FBCA | fbca | Flashing beacon control assembly |
| FBS | fbs | Flashing beacon with slip base |
| FO | fo | Fiber optic |
| G | G | Ground (Equipment Grounding Conductor) |
| GFCI | GFCI | Ground fault circuit interrupt |
| HAR | har | Highway advisory radio |
| HEX | hex | Hexagonal |
| HPS | hps | High pressure sodium |
| IISNS | iisns | Internally illuminated street name sign |
| ISL | isl | Induction sign lighting |
| LED | led | Light emitting diode |
| LMA | lma | Luminaire mast arm |
| LPS | lps | Low pressure sodium |
| LTG | ltg | Lighting |
| LUM | lum | Luminaire |
| MAT | mat | Mast arm mounting vehicle signal faces, top attachment |
| MAS | mas | Mast arm mounting vehicle signal faces, side attachment |
| MAS-4A | mas-4A | Mast arm mounting vehicle signal faces, side attachment - 4 signal section |
| MAS-4B | mas-4B | |
| MAS-4C | mas-4C | |
| MAS-5A | mas-5A | Mast arm mounting vehicle signal faces, side attachment - 5 signal section |
| MAS-5B | mas-5B | |
| MC | mc | Mercury contactor |
| M/M | m/m | Multiple to multiple transformer |
| MT | mt | Conduit with pull wire or rope only |
| MTG | mtg | Mounting |
| | mv | Mercury vapor lighting fixture |
| N | N | Neutral (Grounded Conductor) |
| NC | NC | Normally closed |
| NO | NO | Normally open |
| PB | pb | Pull box |
| PEC | pec | Photoelectric control (Type Ⅰ, Ⅱ, Ⅲ, Ⅳ or Ⅴ as shown) |
| PED | ped | Pedestrian |
| PEU | peu | Photoelectric unit |
| PPB | ppb | Pedestrian push button |
| RL | | Relocated equipment |
| RM | rm | Ramp metering |
| SB | sb | Slip base |
| SIC | sic | Signal interconnect cable |
| SIG | sig | Signal |
| SMA | sma | Signal mast arm |
| SNS | sns | Street name sign |
| SP | sp | Service point |
| TDC | tdc | Telephone demarcation cabinet |
| TMS | tms | Traffic monitoring station |
| TOS | tos | Traffic Operations System |
| VEH | veh | Vehicle |
| XFMR | xfmr | Transformer |
| COMM | comm | Communication |
| RWIS | rwis | Roadway weather information system |

# SOFFIT AND WALL MOUNTED LUMINAIRES

Pendant, 70 W HPS unless otherwise specified.

Flush, 70 W HPS unless otherwise specified.

Wall surface, 70 W HPS unless otherwise specified.

Existing soffit or wall luminaire to remain unmodified.

Existing soffit or wall luminaire to be modified as specified.

## NOTE:

Arrow indicates "street side" of luminaire.

STATE OF CALIFORNIA
DEPARTMENT OF TRANSPORTATION

# ELECTRICAL SYSTEMS (SYMBOLS AND ABBREVIATIONS)

NO SCALE

RSP ES-1A DATED OCTOBER 5, 2007 SUPERSEDES STANDARD PLAN ES-1A DATED MAY 1, 2006 - PAGE 400 OF THE STANDARD PLANS BOOK DATED MAY 2006.

**REVISED STANDARD PLAN RSP ES-1A**

**2006 REVISED STANDARD PLAN RSP ES-1A**

| DIST | COUNTY | ROUTE | POST MILES TOTAL PROJECT | SHEET NO. | TOTAL SHEETS |
|---|---|---|---|---|---|
| 12 | Ora | 22 | R8.8/R9.1 | 37 | 42 |

REGISTERED ELECTRICAL ENGINEER

October 5, 2007
PLANS APPROVAL DATE

REGISTERED PROFESSIONAL ENGINEER Jeffery G. McRae No. E14512 Exp. 6-30-08 ELECTRICAL STATE OF CALIFORNIA

*The State of California or its officers or agents shall not be responsible for the accuracy or completeness of electronic copies of this plan sheet.*

*To accompany plans dated* 3-7-11

## CONDUIT

| PROPOSED | EXISTING | |
|---|---|---|
| | | Lighting Conduit, unless otherwise indicated or noted |
| | | Traffic signal conduit |
| C | c | Communication conduit |
| T | t | Telephone conduit |
| F | f | Fire alarm conduit |
| FO | fo | Fiber optic conduit |
| | | Conduit termination (RSP ES-9A C) |
| R | r | Conduit riser in/on structure or service pole |

## SERVICE EQUIPMENT

| PROPOSED | EXISTING | |
|---|---|---|
| OH | oh | Overhead lines |
| U | U | Wood pole "U" indicates utility owned |
| | | Pole guy with anchor |
| | | Utility transformer - ground mounted |
| III | | Service equipment enclosure type |
| | | Service equipment enclosure door indicates front of enclosure |
| T | t | Telephone demarcation cabinet |

## POLE-MOUNTED SERVICE DESIGNATION

Type of installation

TYPE H SERVICE - 28'-10" ← Pole height above grade

## ILLUMINATED OVERHEAD SIGN

| PROPOSED | EXISTING | |
|---|---|---|
| | | Overhead sign - Single post |
| | | Overhead sign - Two post |
| | | Overhead sign - Mounted on structure |
| | | Overhead sign with electrolier |

## SIGNAL EQUIPMENT

| PROPOSED | EXISTING | |
|---|---|---|
| | | Pedestrian signal face |
| | | Pedestrian push button post |
| | | Pedestrian barricade |
| | | Vehicle signal face (with backplate, 3-Section: red, yellow and green) |
| | | Vehicle signal face with angle visors |
| PV | PV | Modifications of basic symbols: "L" indicates all non-arrow sections louvered "LG" indicates louvered green section only "PV" indicates 12" programmed visibility sections "8" indicates all 8" sections (only when specified) |
| | | Type 15TS and Vehicle signal face |
| | | Vehicle signal face with red, yellow and green left arrow sections |
| | | Vehicle signal face with red and yellow sections and up green arrow |
| | | Vehicle signal face (5 Section) with red, yellow and green sections and yellow and green right arrows |
| | | Type 1 Standard and attached vehicle signal faces |
| | | Standard with signal mast arm only and attached vehicle signal faces and internally illuminated street name sign |
| | | Type 33 Standard, Left-turn vehicle signal face and sign |
| | | Standard with luminaire and signal mast arms and attached vehicle signal faces |
| | | Cantilever flashing beacon Type 9 Frame, with a sign unless otherwise specified or indicated |
| | | Type 15-FBS Standard with two vehicle signal face sections with lens, backplate and visor with a sign |
| R | Y | Flashing beacon. One vehicle signal face section with lens, backplate and visor. "R" indicates red indication, "Y" indicates yellow indication |
| | | Controller assembly. Door indicates front of cabinet |

## SIGNAL EQUIPMENT Cont

| PROPOSED | EXISTING | |
|---|---|---|
| | | Guard post |
| | | Type 1 Standard with "Meter On" sign |
| | | Emergency Vehicle detector |

## NOTES:

1. All signal sections shall be 12" unless shown otherwise.
2. Signal heads shall be provided with backplates unless shown otherwise.
3. Signal indication shall be LED.

STATE OF CALIFORNIA
DEPARTMENT OF TRANSPORTATION

# ELECTRICAL SYSTEMS (SYMBOLS AND ABBREVIATIONS)

NO SCALE

RSP ES-1B DATED OCTOBER 5, 2007 SUPERCEDES STANDARD PLAN ES-1B DATED MAY 1, 2006 - PAGE 401 OF THE STANDARD PLANS BOOK DATED MAY 2006.

**REVISED STANDARD PLAN RSP ES-1B**

**2006 REVISED STANDARD PLAN RSP ES-1B**

| DIST | COUNTY | ROUTE | POST MILES TOTAL PROJECT | SHEET NO. | TOTAL SHEETS |
|---|---|---|---|---|---|
| 12 | Ora | 22 | R8.8/R9.1 | 38 | 42 |

REGISTERED ELECTRICAL ENGINEER

October 5, 2007
PLANS APPROVAL DATE

REGISTERED PROFESSIONAL ENGINEER Jeffery G. McRae No. E14512 Exp. 6-30-08 ELECTRICAL STATE OF CALIFORNIA

*The State of California or its officers or agents shall not be responsible for the accuracy or completeness of electronic copies of this plan sheet.*

*To accompany plans dated* 3-7-11

# EQUIPMENT IDENTIFICATION

## ILLUMINATED SIGN IDENTIFICATION NUMBER:

Sign No. 12345 — Sign number - Place on post or structure

10 ISL SCI 1.0

- 1.0 — Transformer rating (kVA)
- SCI — Lighting control type
- ISL — Number and type of fixtures

Do NOT place on standard or structure

## ELECTROLIER OR EQUIPMENT IDENTIFICATION NUMBER:

12345 - 15'-0"

- 15'-0" — Mast arm length, if shown. Do not place on standard or structure.
- 12345 — Equipment number - Place on standard or structure. Existing equipment numbers are shown in parenthesis

## CONDUIT AND CONDUCTOR IDENTIFICATION:

1½"C, 2#10, 15#14, 2 DLC

- 2#10, 15#14, 2 DLC — Number and size of conductors and cables
- 1½"C — Size of conduit in inches

| | |
|---|---|
| Ø1, Ø2, Ø2P, etc. | Traffic phase identification for signal faces, detectors and phase diagrams |
| 1 2 3 | Project note numbers |
| A B C | Equipment description, installation or item numbers |
| 1 2 3 | Conduit run numbers |

## SIGNAL AND LIGHTING STANDARD (TYPICAL DESIGNATION):

19A - 3 - 100

- 100 — Wind velocity = 100 mph
- 3 — Case 3 arm loading
- 19A — Standard type
- Standard Plan sheet number
- Detail number or letter

## MISCELLANEOUS EQUIPMENT

| PROPOSED | EXISTING | |
|---|---|---|
| CMS | cms | Changeable message sign |
| | | Closed circuit television camera |
| | | Highway advisory radio pole and antenna |
| EMS | ems | Extinguishable message sign |
| M V | m v | Detection device<br>M = Microwave sensor<br>V = Video image sensor |

## WIRING DIAGRAM LEGEND

| | |
|---|---|
| P | Pole |
| CB | Circuit breaker |
| A | Ampere |
| V | Volt |
| M | Metered |
| UM | Unmetered |
| NB | Neutral bus |
| GB | Ground bus |
| G | Equipment grounding conductor |
| N | Grounded conductor (Neutral) |

- External conductor
- Conductor or bus
- Tie point
- Contactor coil
- Contactor, Contact NO
- Terminal blocks
- Contactor, Contact NC
- Enclosure bond
- Grounding electrode
- Circuit breaker
- Receptacle

## PULL BOXES

PROPOSED EXISTING

Pull box-No. 5 unless otherwise indicated or noted.

3 — 9A(21)

Pull box-Additional designations or descriptions

| | |
|---|---|
| 3 | = No. 3½ pull box |
| 5 | = No. 5 pull box |
| 6 | = No. 6 pull box |
| 7 | = No. 7 (Ceiling pull box) |
| 8 | = No. 8 (Pendant soffit pull box) |
| 9 | = No. 9 pull box |
| 9A | = No. 9A pull box |

(C) = Communications pull box
(E) = Pull box with extension
(S) = Sprinkler control pull box
(21) = Anchor bolts and conduit for future installation of Type 21 Standard
(T) = Traffic pull box

## VEHICLE DETECTORS

5 J 9 U

- U = Upper, L = Lower
- Slot number in input file
- Input file (I or J)
- Phase

| PROPOSED | EXISTING | |
|---|---|---|
| | | Type A detector loop. Outline of sawcut shown. |
| | | Type B detector loop. Outline of sawcut shown. |
| | | Type C detector loop. Outline of sawcut shown. |
| | | Type D detector loop. Outline of sawcut shown. |
| | | Type E detector loop. Outline of sawcut shown. |
| | | Type Q detector loop. Outline of sawcut shown. |
| | | Magnetic detector |
| DH | dh | Detector handhole |
| | | Microwave or video detection zone |

STATE OF CALIFORNIA
DEPARTMENT OF TRANSPORTATION

# ELECTRICAL SYSTEMS (SYMBOLS AND ABBREVIATIONS)

NO SCALE

RSP ES-1C DATED OCTOBER 5, 2007 SUPERCEDES STANDARD PLAN ES-1C DATED MAY 1, 2006 - PAGE 402 OF THE STANDARD PLANS BOOK DATED MAY 2006.

**REVISED STANDARD PLAN RSP ES-1C**

**2006 REVISED STANDARD PLAN RSP ES-1C**

| DIST | COUNTY | ROUTE | POST MILES TOTAL PROJECT | SHEET NO. | TOTAL SHEETS |
|---|---|---|---|---|---|
| 12 | Ora | 22 | R8.8/R9.1 | 39 | 42 |

REGISTERED ELECTRICAL ENGINEER

June 6, 2008
PLANS APPROVAL DATE

REGISTERED PROFESSIONAL ENGINEER
Jeffery G. McRae
No. E14512
Exp. 6-30-10
ELECTRICAL
STATE OF CALIFORNIA

*The State of California or its officers or agents shall not be responsible for the accuracy or completeness of electronic copies of this plan sheet.*

*To accompany plans dated* 3-7-11

## VISORS

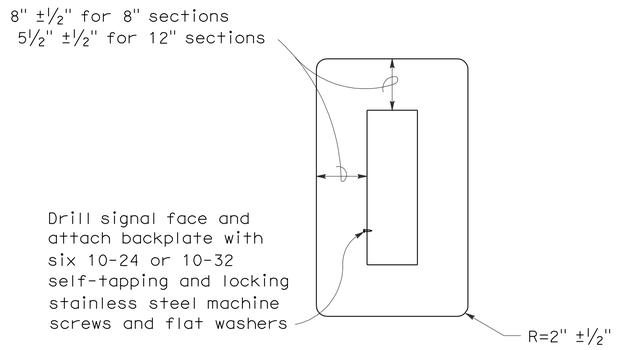


## 8" AND 12" SECTIONS

## BACKPLATE

1/16" minimum thickness
3001-14 aluminum, or plastic when specified

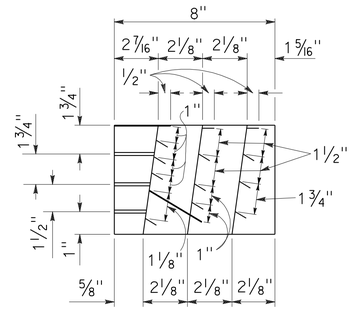


## SECTION A-A

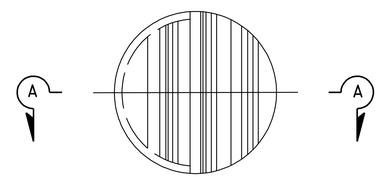


## FRONT VIEW

## DIRECTIONAL LOUVER

Directional louvers shall be oriented as directed by the Engineer and secured in place with one plated brass machine screw and nut.

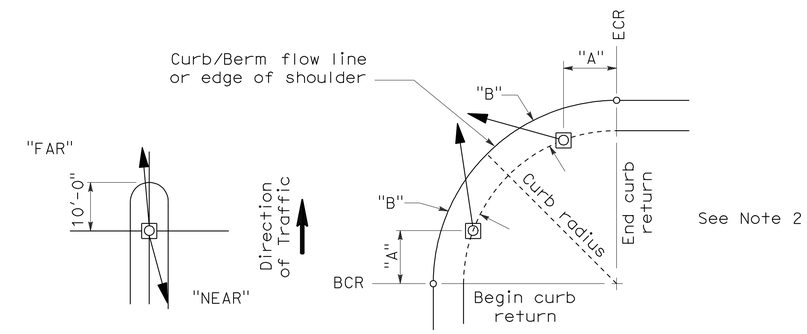


## NOTES:

1. Typical signal pole placement unless dimensioned on plans.
2. For "A" and "B" dimensions, see Pole Schedule, or as directed by the Engineer.

## SIGNAL STANDARD PLACEMENT DIMENSIONS AND EQUIPMENT LOCATIONS

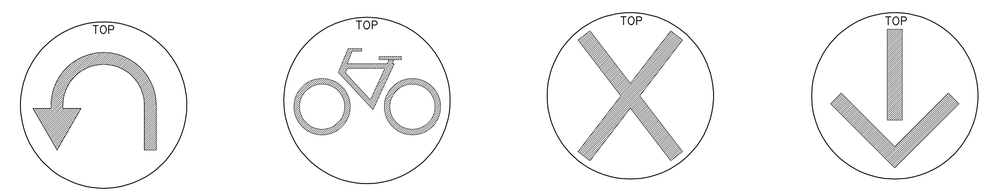


U-TURN SIGNAL FACE | BICYCLE SIGNAL FACE | LANE CONTROL SIGNAL FACE | LANE CONTROL SIGNAL FACE

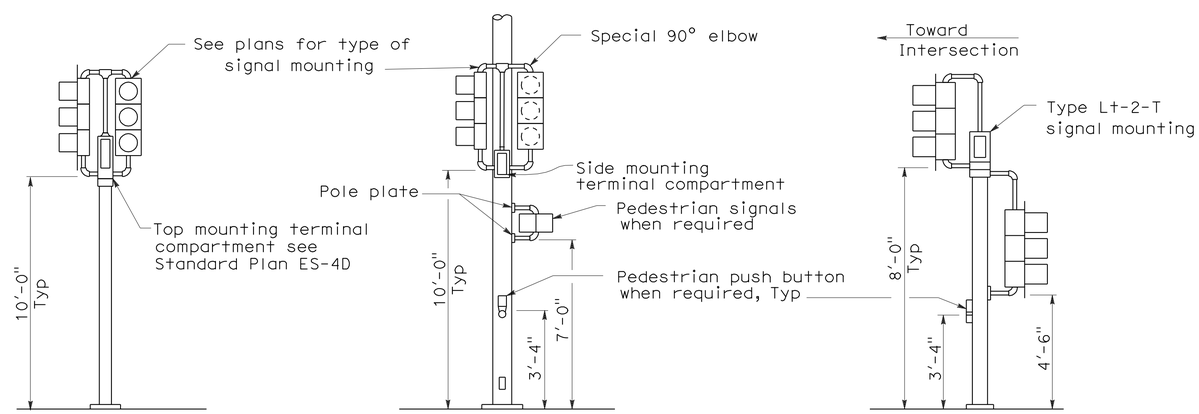


## TOP MOUNTED SIGNALS (TV)

Type 1-A, 1-B, 1-C and 1-D standard as indicated on the plans

## SIDE MOUNTED SIGNALS (SV AND SP)

Normally used on standards with luminaire or signal mast arm

## LEFT TURN LANE SIGNAL

Type 1-A, 1-B, 1-C and 1-D standard as indicated on plans

## TYPICAL SIGNAL INSTALLATIONS

STATE OF CALIFORNIA
DEPARTMENT OF TRANSPORTATION

# ELECTRICAL SYSTEMS (SIGNAL HEADS AND MOUNTINGS)

NO SCALE

RSP ES-4C DATED JUNE 6, 2008 SUPERSEDES STANDARD PLAN ES-4C DATED MAY 1, 2006 - PAGE 420 OF THE STANDARD PLANS BOOK DATED MAY 2006.

**REVISED STANDARD PLAN RSP ES-4C**

**2006 REVISED STANDARD PLAN RSP ES-4C**

5-19-08

| DIST | COUNTY | ROUTE | POST MILES TOTAL PROJECT | SHEET NO. | TOTAL SHEETS |
|---|---|---|---|---|---|
| 12 | Ora | 22 | R8.8/R9.1 | 40 | 42 |

REGISTERED ELECTRICAL ENGINEER

June 6, 2008
PLANS APPROVAL DATE

REGISTERED PROFESSIONAL ENGINEER Jeffery G. McRae No. E14512 Exp. 6-30-10 ELECTRICAL STATE OF CALIFORNIA

*The State of California or its officers or agents shall not be responsible for the accuracy or completeness of electronic copies of this plan sheet.*

*To accompany plans dated* 3-7-11

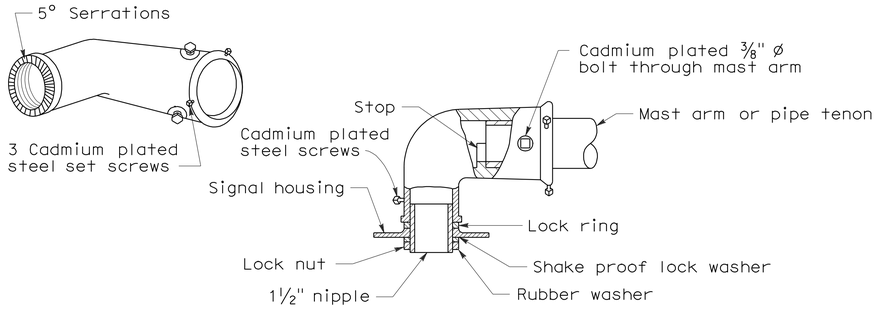


MAST ARM MOUNTING - TYPE "MAT"

For 2 NPS pipe, see Note 1.

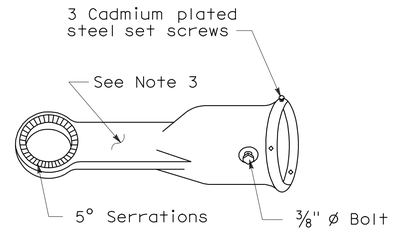


MAST ARM MOUNTING - TYPE "MAS"

For 2 NPS pipe. See Note 1.

SIGNAL SLIP FITTERS

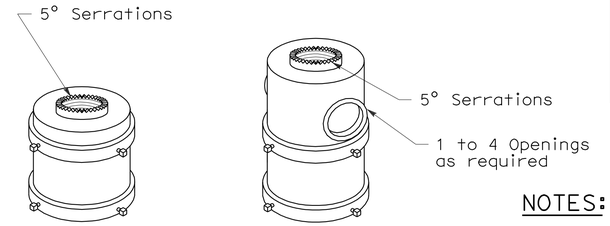


For one mounting For mulitiple mountings

TOP MOUNTINGS

For 4 NPS pipe, see Note 2.

## NOTES:

1. After mast arm signal has been plumbed and secured, drill 7/16" hole through mast arm tenon in line with slip fitter hole. Place a cadmium plated ⅜" ø galvanized bolt with washer under bolt head through hole and secure with washer, nut, and locknut. Seal openings between mast arm mountings and mast arm with mastic.
2. (a) Threaded top mounted slip fitter openings shall be 1½ NPS.
   (b) Serrations in fittings shall match those on bottom of signal heads or in lock ring.
   (c) Top opening shall be offset when backplate is used.
3. Wireway shall have a cross section area of 0.95 square inch minimum. Minimum width of ½".

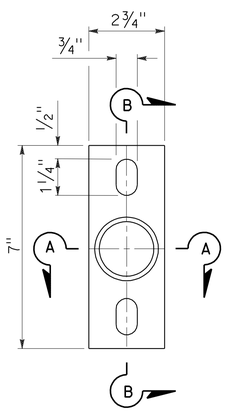


POLE PLATE

For side mountings

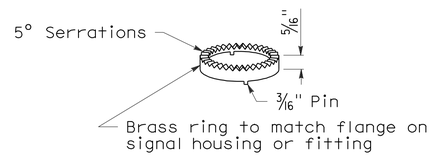


LOCK RING

Use where locking ring is not integral with signal housing or fitting.

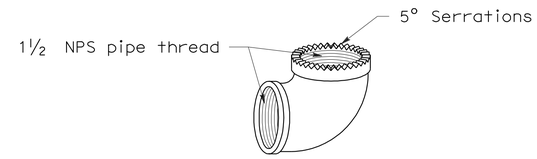


SPECIAL 90° ELBOW

One for each signal head, except those with special slip fitter mounting

MISCELLANEOUS MOUNTING HARDWARE

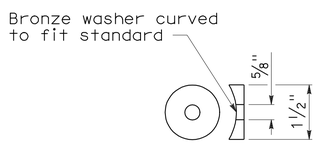


DETAIL "C"

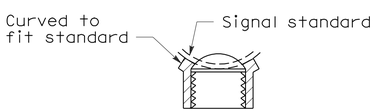


SECTION A-A

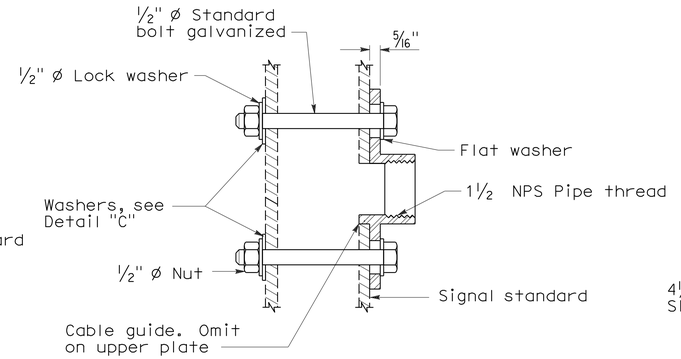


SECTION B-B

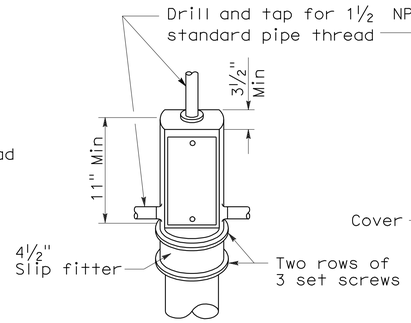


TOP MOUNTING

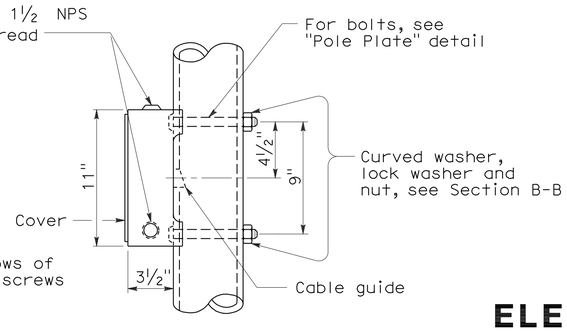


SIDE MOUNTING

TERMINAL COMPARTMENTS

STATE OF CALIFORNIA
DEPARTMENT OF TRANSPORTATION

# ELECTRICAL SYSTEMS (SIGNAL HEADS AND MOUNTINGS)

NO SCALE

RSP ES-4D DATED June 6, 2008 SUPERSEDES STANDARD PLAN ES-4D
DATED MAY 1, 2006 - PAGE 421 OF THE STANDARD PLANS BOOK DATED MAY 2006.

**REVISED STANDARD PLAN RSP ES-4D**

**2006 REVISED STANDARD PLAN RSP ES-4D**

5-19-08

| DIST | COUNTY | ROUTE | POST MILES TOTAL PROJECT | SHEET NO. | TOTAL SHEETS |
|---|---|---|---|---|---|
| 12 | Ora | 22 | R8.8/R9.1 | 41 | 42 |

REGISTERED ELECTRICAL ENGINEER

October 5, 2007
PLANS APPROVAL DATE

REGISTERED PROFESSIONAL ENGINEER Jeffery G. McRae No. E14512 Exp. 6-30-08 ELECTRICAL STATE OF CALIFORNIA

*The State of California or its officers or agents shall not be responsible for the accuracy or completeness of electronic copies of this plan sheet.*

*To accompany plans dated* 3-7-11

# LOOP INSTALLATION PROCEDURE

1. Loops shall be centered in lanes.
2. Saw slots in pavement for loop conductors as shown in details.
3. Distance between side of loop and a lead-in saw cut from adjacent detectors shall be 2'-0" minimum. Distance between lead-in saw cuts shall be 6" minimum.
4. Bottom of saw slot shall be smooth with no sharp edges.
5. Slots shall be washed until clean, blown out and thoroughly dried before installing loop conductors.
6. Adjacent loops on the same sensor unit channel shall be wound in opposite directions.
7. Identify and tag loop circuit pairs in the pull box with loop number, start (S) and finish (F) of conductor. Identify and tag lead-in-cable with sensor number and phase.
8. Install loop conductor in slot using a 3/16" to 1/4" thick wood paddle. Hold loop conductors with wood paddles (at the bottom of the sawed slot) during sealant placement.
9. No more than 2 twisted pairs shall be installed in one sawed slot.
10. Allow additional 5'-0" of slack length of conductor for the lead-in run to pull box.
11. The additional length of each conductor for each loop shall be twisted together into a pair (6 turns per 3'-4" minimum) before being placed in the slot and conduit leading to pull box.
12. Test each loop circuit for continuity, circuit resistance and insulation resistance at the pull box before filling slots.
13. Fill slots as shown in details.
14. Splice loop conductors to lead-in-cable. Splices shall be soldered.
15. End of lead-in-cable and Type 2 loop conductor shall be waterproofed prior to installing in conduit to prevent moisture from entering the cable.
16. Lead-in-cable shall not be spliced between the pull box and the controller cabinet terminals.
17. Test each loop circuit for continuity, circuit resistance and insulation resistance at the controller cabinet location.
18. Where loop conductors are not to be spliced to a lead-in-cable, the ends of the conductors shall be taped and waterproofed with electrical insulating coating.

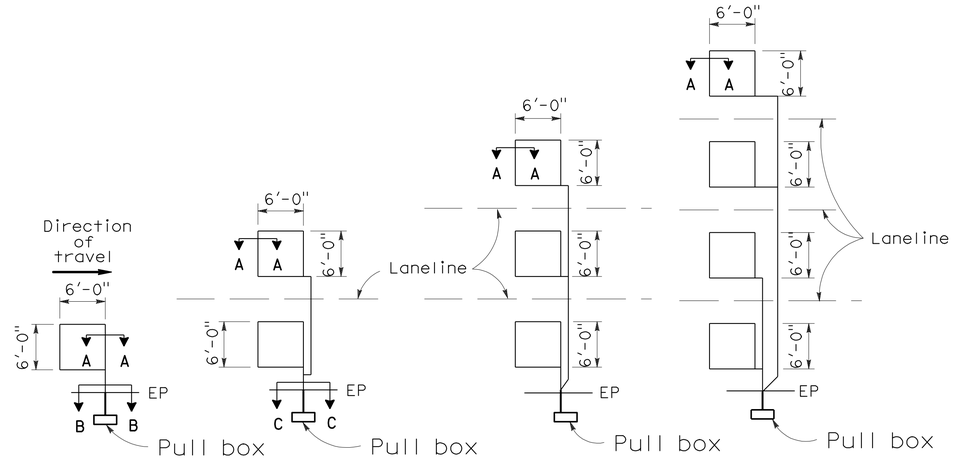


TYPE 1A INSTALLATION | TYPE 2A INSTALLATION | TYPE 3A INSTALLATION | TYPE 4A INSTALLATION

## SAWCUT DETAILS

(Type A loop detector configurations illustrated)

1. 1A thru 4A = 1 Type A loop configuration in each lane.
2. 1B thru 4B = 1 Type B loop configuration in each lane.
3. 1C = 1 Type C loop configuration entering lanes as required.
4. 1D thru 4D = 1 Type D loop configuration in each lane.
5. 1E thru 4E = 1 Type E loop configuration in each lane.
6. 1Q thru 4Q = 1 Type Q loop configuration in each lane. (Use Type A, B, C, D, E or Q loop detector configurations only when specified or shown on plans)

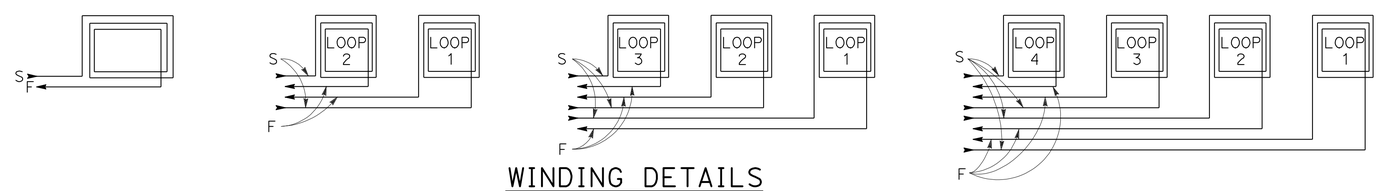


## WINDING DETAILS

See Notes 6 and 7

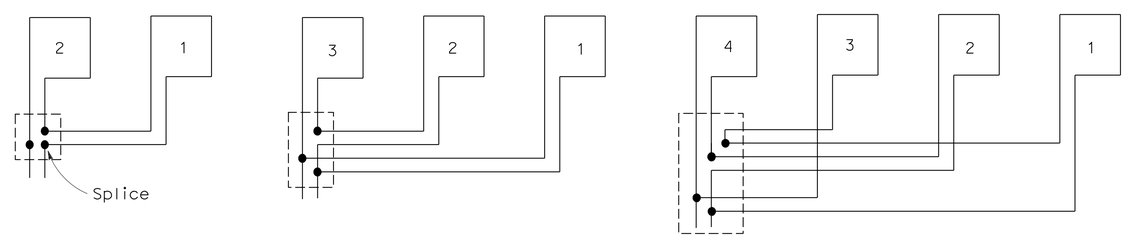


## TYPICAL LOOP CONNECTIONS

(Dashed lines represent the pull box)

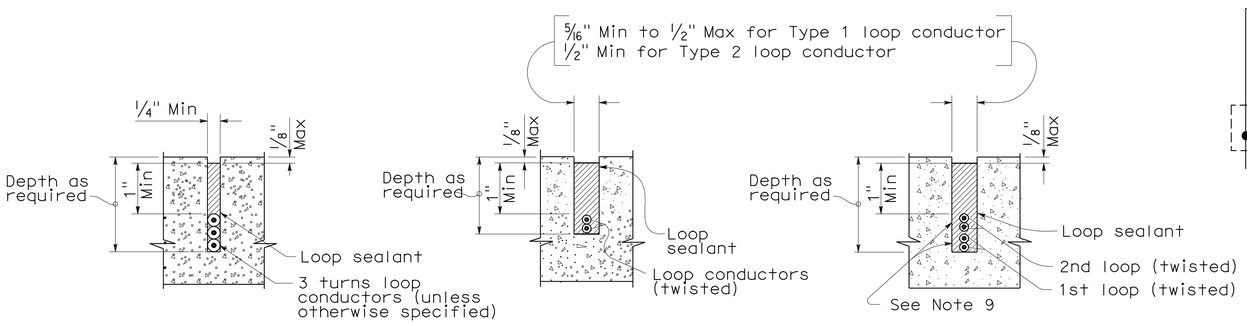


SECTION A-A | SECTION B-B | SECTION C-C

## SLOT DETAILS - TYPE 1 AND TYPE 2 LOOP CONDUCTOR

STATE OF CALIFORNIA
DEPARTMENT OF TRANSPORTATION

# ELECTRICAL SYSTEMS (DETECTORS)

NO SCALE

RSP ES-5A DATED OCTOBER 5, 2007 SUPERCEDES STANDARD PLAN ES-5A DATED MAY 1, 2006 - PAGE 423 OF THE STANDARD PLANS BOOK DATED MAY 2006.

**REVISED STANDARD PLAN RSP ES-5A**

**2006 REVISED STANDARD PLAN RSP ES-5A**

| DIST | COUNTY | ROUTE | POST MILES TOTAL PROJECT | SHEET NO. | TOTAL SHEETS |
|---|---|---|---|---|---|
| 12 | Ora | 22 | R8.8/R9.1 | 42 | 42 |

REGISTERED CIVIL ENGINEER

June 30, 2006
PLANS APPROVAL DATE

REGISTERED PROFESSIONAL ENGINEER Jeffrey B. Woody No. C41260 Exp. 3-31-07 CIVIL STATE OF CALIFORNIA

*The State of California or its officers or agents shall not be responsible for the accuracy or completeness of electronic copies of this plan sheet.*

*To accompany plans dated* 3-7-11

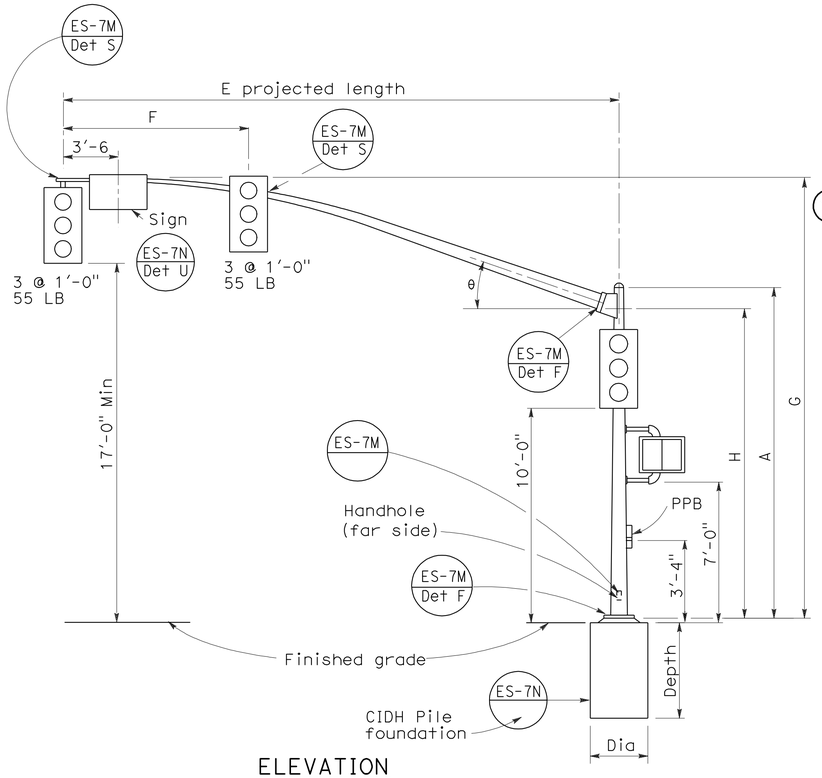


ELEVATION

## TYPE 16-3-100, 18-3-100, 23-3-100, 27-3-100

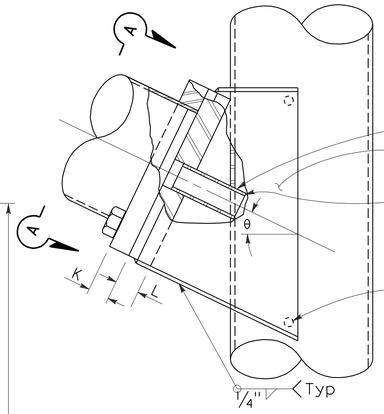


ELEVATION

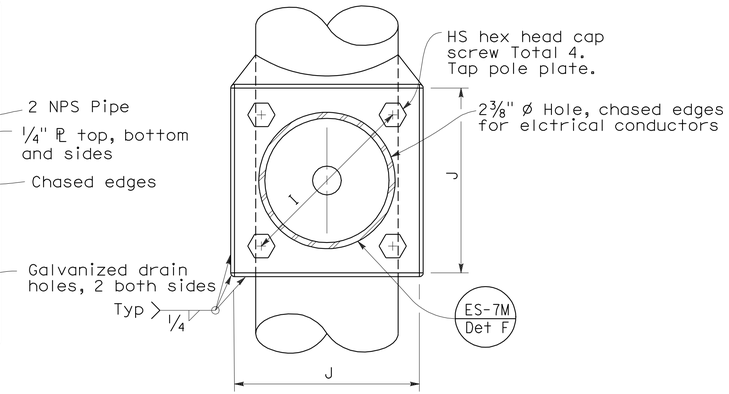


VIEW A-A

## SIGNAL ARM CONNECTION DETAILS

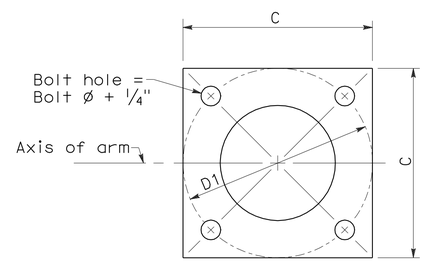


BASE PLATE

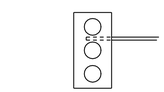

Type 17-3-100

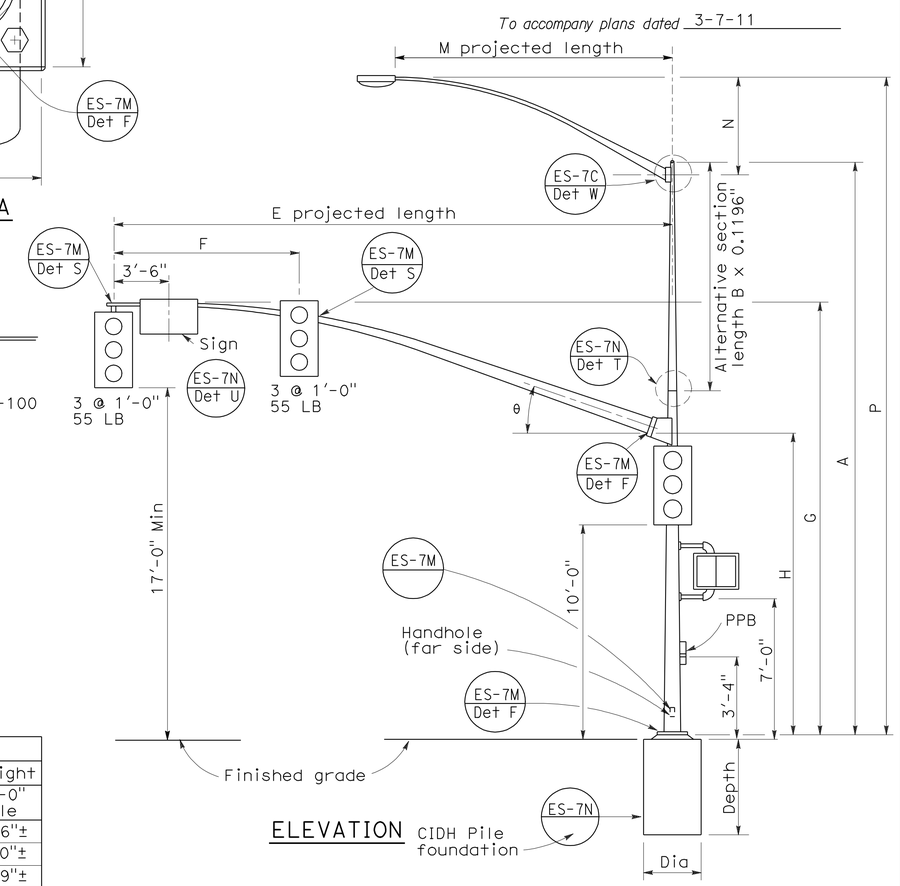


ELEVATION

## TYPE 17-3-100, 24A-3-100, 19-3-100, 26-3-100, 19A-3-100, 26A-3-100, 24-3-100

### SIGNAL ARM DATA

| E Projected Length | F Min Spacing | G Mounting Height | H | Min OD At Pole | Thickness | I Bolt Circle | HS Cap Screws | J Plate Size | K Arm PL Thickness | L Pole PL Thickness | θ |
|---|---|---|---|---|---|---|---|---|---|---|---|
| 15'-0" | 8'-0" | 21'-8"± | 17'-6" | 6 5/8" | 0.1793" | 12" | 1 1/4"-7NC-3" | 1'-0" | 1 1/4" | 1 1/2" | 23° |
| 20'-0" | | 21'-8"± | | 7" | | | | | | | |
| 25'-0" | 12'-0" | 22'-8"± | 16'-0" | 7 5/16" | 0.2391" | | | | | | |
| 30'-0" | | | | 8" | | | | | | | |
| 35'-0" | 14'-0" | 23'-0"± | | 8 3/4" | | 13" | | 1'-1" | 1 1/2" | 1 3/4" | 21° |
| 40'-0" | 15'-0" | | | 9 3/8" | | | | | | | 15° |
| 45'-0" | | 23'-8"± | | 10 1/16" | | | | | | | |

### LUMINAIRE ARM DATA

| M Projected Length | N Rise | Min OD at Pole | Thickness | P Mounting Height 30'-0" Pole | P Mounting Height 35'-0" Pole |
|---|---|---|---|---|---|
| 6'-0" | 2'-0"± | 3 1/4" | 0.1196" | 31'-6"± | 36'-6"± |
| 8'-0" | 2'-6"± | 3 1/2" | | 32'-0"± | 37'-0"± |
| 10'-0" | 3'-3"± | 3 7/8" | | 32'-9"± | 37'-9"± |
| 12'-0" | 4'-3"± | | | 33'-9"± | 38'-9"± |
| 15'-0" | 4'-9"± | 4 1/4" | | 34'-3"± | 39'-3"± |

| Pole Type | Load Case | Wind Velocity mph | POLE DATA: A Height | Min OD Base | Min OD Top | Thickness | Alternative Section B Length | Alternative Section Bottom | Alternative Section Top | BASE PLATE DATA: C | D1 Bolt Circle | Thickness | Anchor Bolts Size | Luminaire Arm | Signal Arm | CIDH PILE FOUNDATION: Diameter | Depth | Reinforced |
|---|---|---|---|---|---|---|---|---|---|---|---|---|---|---|---|---|---|---|
| 16-3-100 | 3 | 100 | 18'-6" | 10 3/4" | 8 1/4" | 0.1793" | None | | | 1'-6" | 1'-5 1/2" | 1 1/2" | 2"Ø x 42" x 6" | None | 15'-0", 20'-0" | 3'-0" | 9'-0" | Yes |
| 17-3-100 | | | 30'-0" | | 6 5/8" | | 10'-0" | 8" | 7 5/16" | | | | | 6'-15' [12'-0"] | | | | |
| 18-3-100 | | | 17'-0" | | 8 7/16" | 0.2391" | None | | | | | | | None | 25'-0", [30'-0"] | | | |
| 19-3-100 | | | 30'-0" | 1'-0" | 7 7/8" | | 10'-0" | 9 1/4" | 7 7/8" | | | | | 6'-15' [12'-0"] | | | | |
| 19A-3-100 | | | 35'-0" | | 7 3/16" | | 15'-0" | | 7 3/16" | | | | | 6'-15' [15'-0"] | | | | |
| 23-3-100 | | | 17'-0" | | 9 5/8" | | None | | | | | | | None | 35'-0" | | | |
| 24-3-100 | | | 30'-0" | | 7 7/8" | | 10'-0" | 9 1/4" | 7 7/8" | | | | | 6'-15' [12'-0"] | | | | |
| 24A-3-100 | | | 35'-0" | | 7 3/16" | | 15'-0" | | 7 3/16" | | | | | 6'-15' [15'-0"] | | | | |
| 26-3-100 | | | 30'-0" | 1'-1/8" | 8" | 0.3125" | 10'-0" | 9 3/8" | 8" | | | | | 6'-15' [12'-0"] | 40'-0", [45'-0"] | | | |
| 26A-3-100 | | | 35'-0" | | 7 5/16" | | 15'-0" | | 7 5/16" | | | | | 6'-15' [15'-0"] | | | | |
| 27-3-100 | | | 17'-0" | | 9 3/4" | | None | | | | | | | None | | | | |

☐ Indicates arm length to be used unless otherwise noted on plans.

STATE OF CALIFORNIA
DEPARTMENT OF TRANSPORTATION

# ELECTRICAL SYSTEMS (SIGNAL AND LIGHTING STANDARD CASE 3 ARM LOADING WIND VELOCITY=100 MPH ARM LENGTHS 15' TO 45')

NO SCALE

RSP ES-7E DATED JUNE 30, 2006 SUPERSEDES STANDARD PLAN DATED MAY 1, 2006 - PAGE 441 OF THE STANDARD PLANS BOOK DATED MAY 2006.

**REVISED STANDARD PLAN RSP ES-7E**

**2006 REVISED STANDARD PLAN RSP ES-7E**

5-9-06