ACHSIMG-005-2(964)E

Dist	COUNTY	ROUTE	POST MILES TOTAL PROJECT	SHEET No.	TOTAL SHEETS
12	Ora	5	19.5	1	30

STATE OF CALIFORNIA
DEPARTMENT OF TRANSPORTATION

PROJECT PLANS FOR CONSTRUCTION ON
STATE HIGHWAY
IN ORANGE COUNTY
IN LAKE FOREST, IRVINE, AND LAGUNA HILLS
FROM ROCKFIELD BOULEVARD
TO AVENIDA DE LA CARLOTA

TO BE SUPPLEMENTED BY STANDARD PLANS DATED 2010

INDEX OF PLANS

SHEET No.	DESCRIPTION
1	TITLE AND LOCATION MAP
2-3	TYPICAL CROSS SECTIONS
4-5	LAYOUT
6-8	DRAINAGE PLAN, PROFILES AND QUANTITIES
9-10	UTILITIES
11	CONSTRUCTION AREA SIGNS
12-14	PAVEMENT DELINEATION PLAN AND QUANTITIES
15-19	SIGN PLAN, DETAIL AND QUANTITIES
20	SUMMARY OF QUANTITIES
21-24	ELECTRICAL PLANS
25-30	REVISED STANDARD PLANS

THE STANDARD PLANS LIST APPLICABLE TO THIS CONTRACT IS INCLUDED IN THE NOTICE TO BIDDERS AND SPECIAL PROVISIONS BOOK.

LOCATION OF CONSTRUCTION
PM 19.5

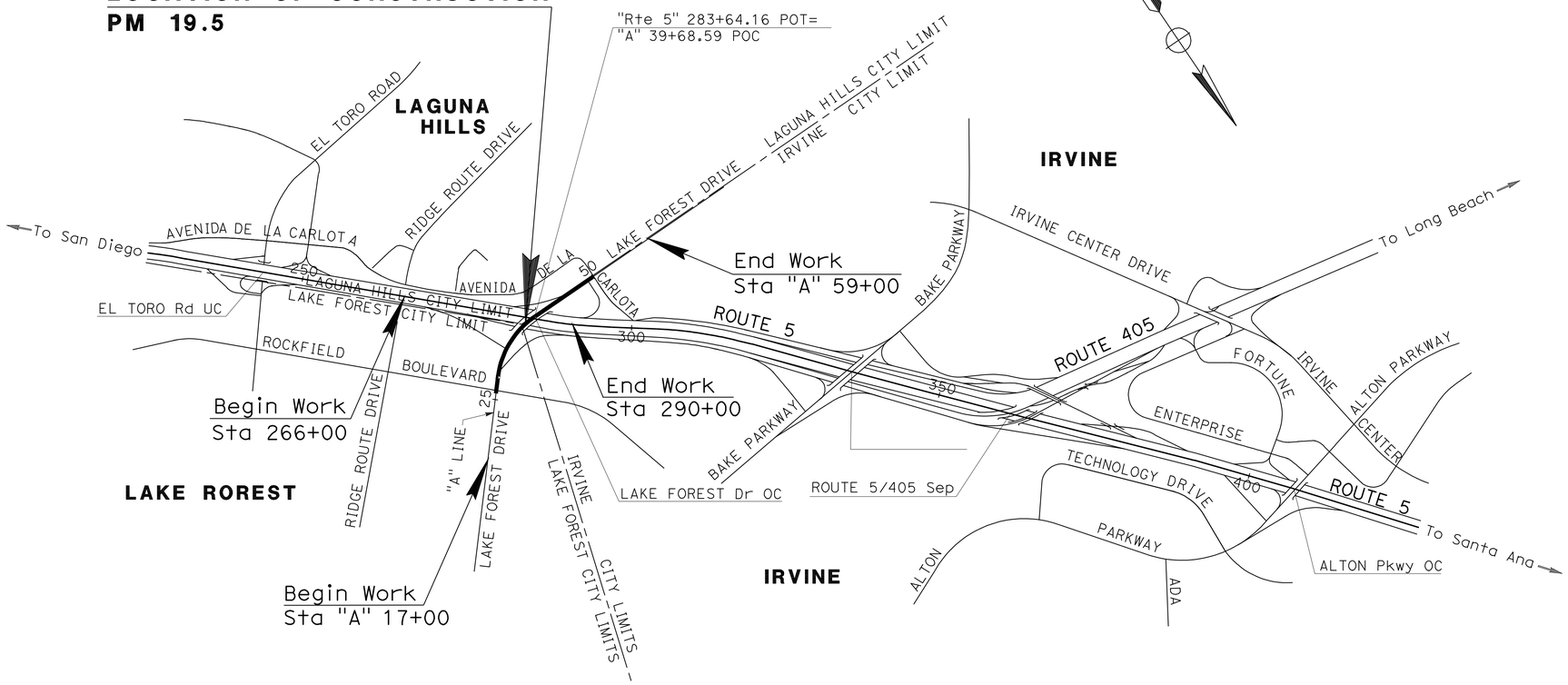

THE CONTRACTOR SHALL POSSESS THE CLASS (OR CLASSES) OF LICENSE AS SPECIFIED IN THE "NOTICE TO BIDDERS."

NO SCALE

PROJECT MANAGER NOOSHIN YOOSEFI

DESIGN ENGINEER FARIBA A. KHOSRAVI

10-03-12
PROJECT ENGINEER REGISTERED CIVIL ENGINEER — DATE

FARIBA A. KHOSRAVI No. C54265 Exp. 12/31/13 CIVIL — REGISTERED PROFESSIONAL ENGINEER — STATE OF CALIFORNIA

November 13, 2012
PLANS APPROVAL DATE

THE STATE OF CALIFORNIA OR ITS OFFICERS OR AGENTS SHALL NOT BE RESPONSIBLE FOR THE ACCURACY OR COMPLETENESS OF SCANNED COPIES OF THIS PLAN SHEET.

CONTRACT No.	12-0L8704
PROJECT ID	1200020237

LAST REVISION 09-10-12 — DATE PLOTTED => 12-DEC-2012 TIME PLOTTED => 10:02

Dist	COUNTY	ROUTE	POST MILES TOTAL PROJECT	SHEET No.	TOTAL SHEETS
12	Ora	5	19.5	2	30

REGISTERED CIVIL ENGINEER 10-03-12 DATE

11-13-12
PLANS APPROVAL DATE

REGISTERED PROFESSIONAL ENGINEER KIMBERLY NGUYEN No. C 64577 Exp. 6/30/13 CIVIL STATE OF CALIFORNIA

THE STATE OF CALIFORNIA OR ITS OFFICERS OR AGENTS SHALL NOT BE RESPONSIBLE FOR THE ACCURACY OR COMPLETENESS OF SCANNED COPIES OF THIS PLAN SHEET.

NOTES:

1. DIMENSIONS OF THE PAVEMENT STRUCTURES (STRUCTURAL SECTIONS) ARE SUBJECT TO TOLERANCES SPECIFIED IN THE STANDARD SPECIFICATIONS.
2. SUPERELEVATION AS SHOWN OR AS DIRECTED BY THE ENGINEER.
3. EXACT LOCATIONS OF CONCRETE CURB ARE SHOWN ON THE LAYOUTS AND SUMMARY OF QUANTITIES SHEETS.

ABBREVIATION:

R-HMA = RUBBERIZED HOT MIX ASPHALT

TYPICAL PAVEMENT STRUCTURAL SECTIONS:

1
- Exist
- 0.40′ AC
- 0.75′ AB
- 0.85′ AS

2
- Exist
- 0.55′ AC (Type B)
- 0.90′ CL 2 AB
- 0.70′ CL 4 AS

3
- 0.20′ R-HMA (Gap Graded)
- 0.40′ HMA Type A
- 1.60′ AS (Class 3)
- 1.80′ Imported Borrow

4
- 0.17′ Minor Conrete (Island Paving)
- 2.53′ AS (Class 3)
- 1.80′ Imported Borrow

5
- 0.17′ Minor Conrete (Island Paving)
- 1.00′ AS (Class 3)

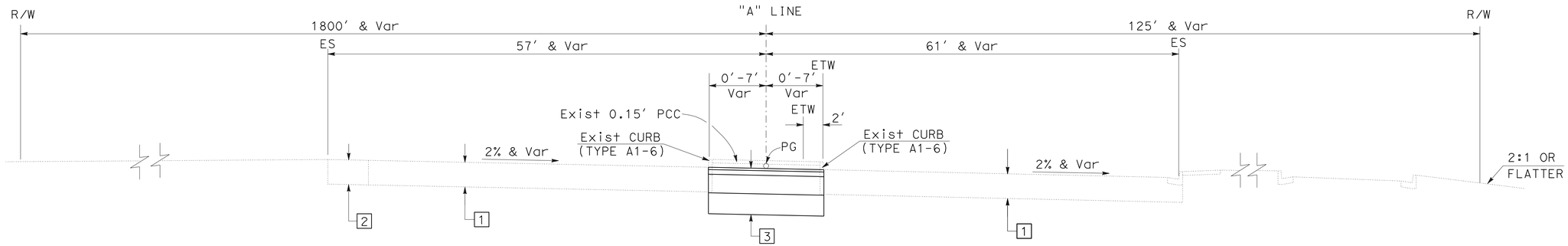

"A" 33+52.00 TO "A" 33+58.10

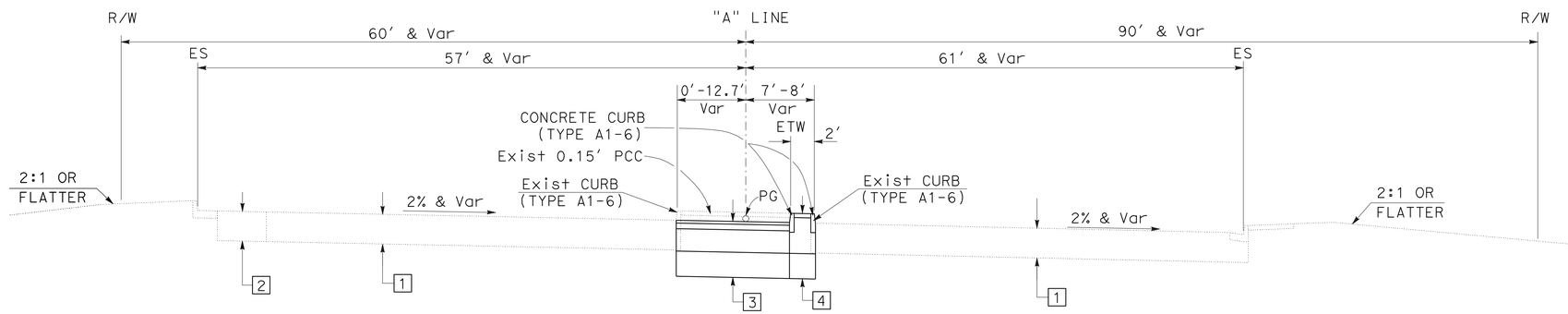

"A" 31+38.29 TO "A" 33+52.00

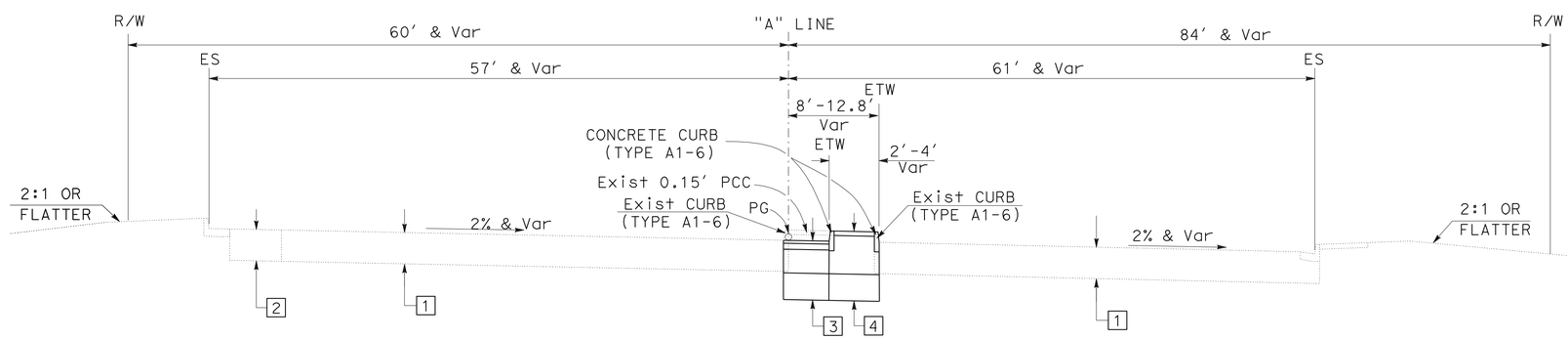

"A" 31+10.00 TO "A" 31+38.29

LAKE FOREST DRIVE

TYPICAL CROSS SECTIONS

NO SCALE

X-1

STATE OF CALIFORNIA - DEPARTMENT OF TRANSPORTATION
Caltrans® DESIGN BRANCH G
FUNCTIONAL SUPERVISOR: SUSAN YEE
CALCULATED-DESIGNED BY: KIMBERLY NGUYEN
CHECKED BY: FARIBA A. KHOSRAVI
REVISED BY / DATE REVISED

LAST REVISION 09-10-12 | DATE PLOTTED => 15-NOV-2012 | TIME PLOTTED => 11:26

Dist	COUNTY	ROUTE	POST MILES TOTAL PROJECT	SHEET No.	TOTAL SHEETS
12	Ora	5	19.5	3	30

REGISTERED CIVIL ENGINEER 10-03-12 DATE

11-13-12
PLANS APPROVAL DATE

REGISTERED PROFESSIONAL ENGINEER KIMBERLY NGUYEN No. C 64577 Exp. 6/30/13 CIVIL STATE OF CALIFORNIA

THE STATE OF CALIFORNIA OR ITS OFFICERS OR AGENTS SHALL NOT BE RESPONSIBLE FOR THE ACCURACY OR COMPLETENESS OF SCANNED COPIES OF THIS PLAN SHEET.

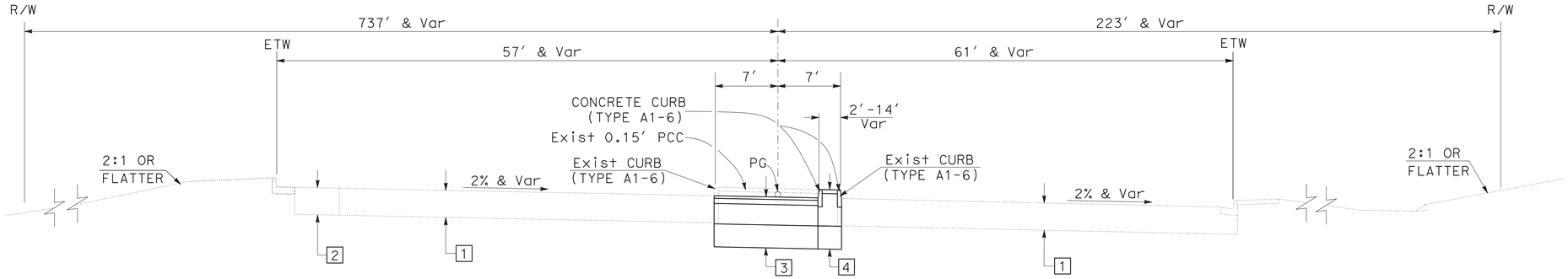

"A" 36+55.86 TO "A" 37+00

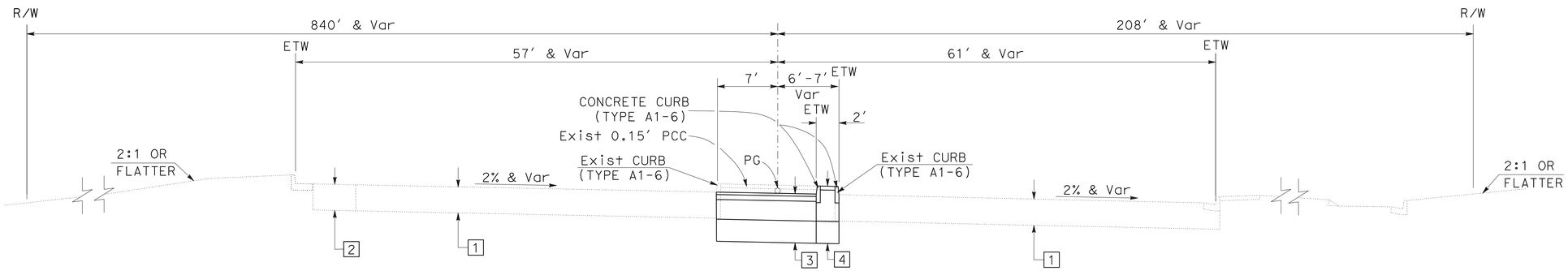

"A" 34+35.82 TO "A" 36+55.86

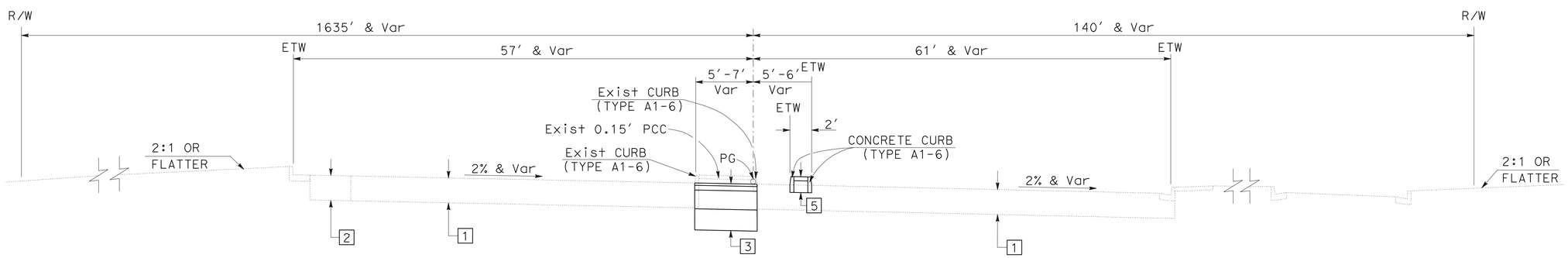

"A" 34+18.00 TO "A" 34+35.82

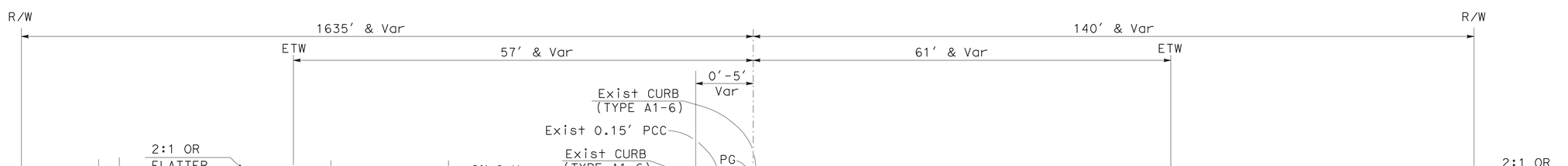

"A" 34+16.78 TO "A" 34+18.00

LAKE FOREST DRIVE

TYPICAL CROSS SECTIONS

NO SCALE

X-2

STATE OF CALIFORNIA - DEPARTMENT OF TRANSPORTATION
Caltrans® **DESIGN BRANCH G**

FUNCTIONAL SUPERVISOR: SUSAN YEE
CALCULATED-DESIGNED BY: KIMBERLY NGUYEN
CHECKED BY: FARIBA A. KHOSRAVI
REVISED BY
DATE REVISED

LAST REVISION 09-10-12 | DATE PLOTTED => 15-NOV-2012 | TIME PLOTTED => 11:26

Dist	COUNTY	ROUTE	POST MILES TOTAL PROJECT	SHEET No.	TOTAL SHEETS
12	Ora	5	19.5	4	30

REGISTERED CIVIL ENGINEER 10-03-12 DATE

11-13-12
PLANS APPROVAL DATE

REGISTERED PROFESSIONAL ENGINEER KIMBERLY NGUYEN No. C 64577 Exp. 6/30/13 CIVIL STATE OF CALIFORNIA

THE STATE OF CALIFORNIA OR ITS OFFICERS OR AGENTS SHALL NOT BE RESPONSIBLE FOR THE ACCURACY OR COMPLETENESS OF SCANNED COPIES OF THIS PLAN SHEET.

NOTE:

1. FOR ACCURATE RIGHT OF WAY DATA, CONTACT RIGHT OF WAY ENGINEERING AT THE DISTRICT OFFICE.

LEGEND:

○ CURVE DATA NUMBER

□ STRUCTURAL SECTION NUMBER

CURVE DATA

No.	R	Δ	T	L
1	1600.00′	44°59′02″	662.48′	1256.19′
2	900.00′	62°32′17″	546.54′	982.35′
3	5000.00′	6°52′38″	300.44′	600.16′

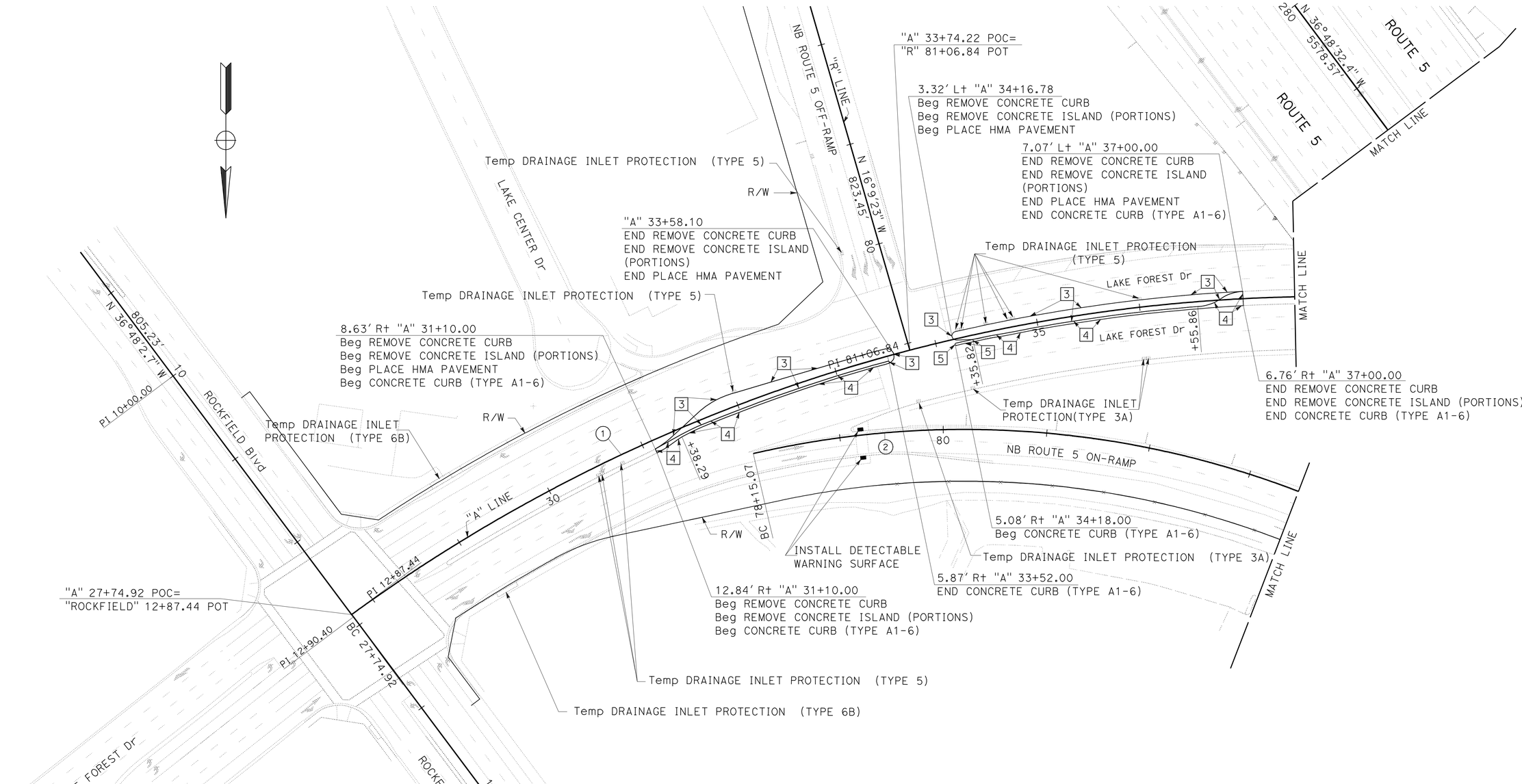

LAYOUT

SCALE: 1″ = 50′

L-1

STATE OF CALIFORNIA - DEPARTMENT OF TRANSPORTATION
Caltrans® DESIGN BRANCH G

FUNCTIONAL SUPERVISOR: SUSAN YEE
CALCULATED-DESIGNED BY: KIMBERLY NGUYEN
CHECKED BY: FARIBA A. KHOSRAVI
REVISED BY / DATE REVISED

LAST REVISION 09-10-12 | DATE PLOTTED => 15-NOV-2012 | TIME PLOTTED => 11:27

Dist	COUNTY	ROUTE	POST MILES TOTAL PROJECT	SHEET No.	TOTAL SHEETS
12	Ora	5	19.5	5	30

REGISTERED CIVIL ENGINEER 10-03-12 DATE

11-13-12
PLANS APPROVAL DATE

REGISTERED PROFESSIONAL ENGINEER
KIMBERLY NGUYEN
No. C 64577
Exp. 6/30/13
CIVIL
STATE OF CALIFORNIA

THE STATE OF CALIFORNIA OR ITS OFFICERS OR AGENTS SHALL NOT BE RESPONSIBLE FOR THE ACCURACY OR COMPLETENESS OF SCANNED COPIES OF THIS PLAN SHEET.

NOTE:

1. FOR ACCURATE RIGHT OF WAY DATA, CONTACT RIGHT OF WAY ENGINEERING AT THE DISTRICT OFFICE.

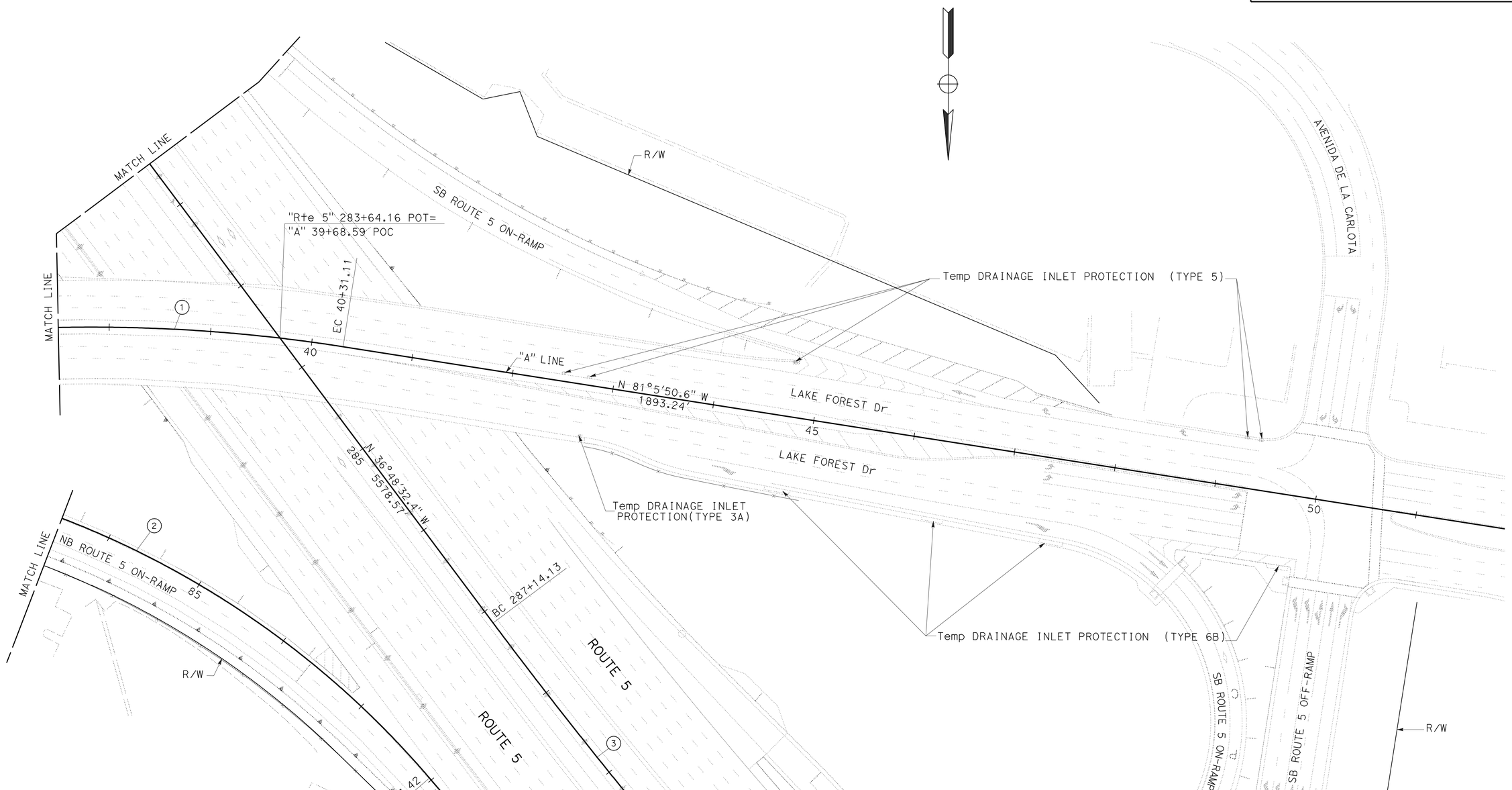

LAYOUT

SCALE: 1" = 50'

L-2

STATE OF CALIFORNIA - DEPARTMENT OF TRANSPORTATION
Caltrans® DESIGN BRANCH G

FUNCTIONAL SUPERVISOR: SUSAN YEE
CALCULATED-DESIGNED BY: KIMBERLY NGUYEN
CHECKED BY: FARIBA A. KHOSRAVI
REVISED BY
DATE REVISED

LAST REVISION 09-10-12
DATE PLOTTED => 15-NOV-2012
TIME PLOTTED => 12:48

BORDER LAST REVISED 7/2/2010
USERNAME => s117606
DGN FILE => 1200020237ea002.dgn
RELATIVE BORDER SCALE IS IN INCHES 0 1 2 3
UNIT 3001
PROJECT NUMBER & PHASE 12000202371

Dist	COUNTY	ROUTE	POST MILES TOTAL PROJECT	SHEET No.	TOTAL SHEETS
12	Ora	5	19.5	6	30

REGISTERED CIVIL ENGINEER 10-03-12 DATE

11-13-12
PLANS APPROVAL DATE

REGISTERED PROFESSIONAL ENGINEER
PHI DINH
No. C61179
Exp.06/30/13
CIVIL
STATE OF CALIFORNIA

THE STATE OF CALIFORNIA OR ITS OFFICERS OR AGENTS SHALL NOT BE RESPONSIBLE FOR THE ACCURACY OR COMPLETENESS OF SCANNED COPIES OF THIS PLAN SHEET.

NOTE:

1. FOR ACCURATE RIGHT OF WAY DATA, CONTACT RIGHT OF WAY ENGINEERING AT THE DISTRICT OFFICE.

LEGEND:

(x) DRAINAGE SYSTEM

(x) DRAINAGE UNIT

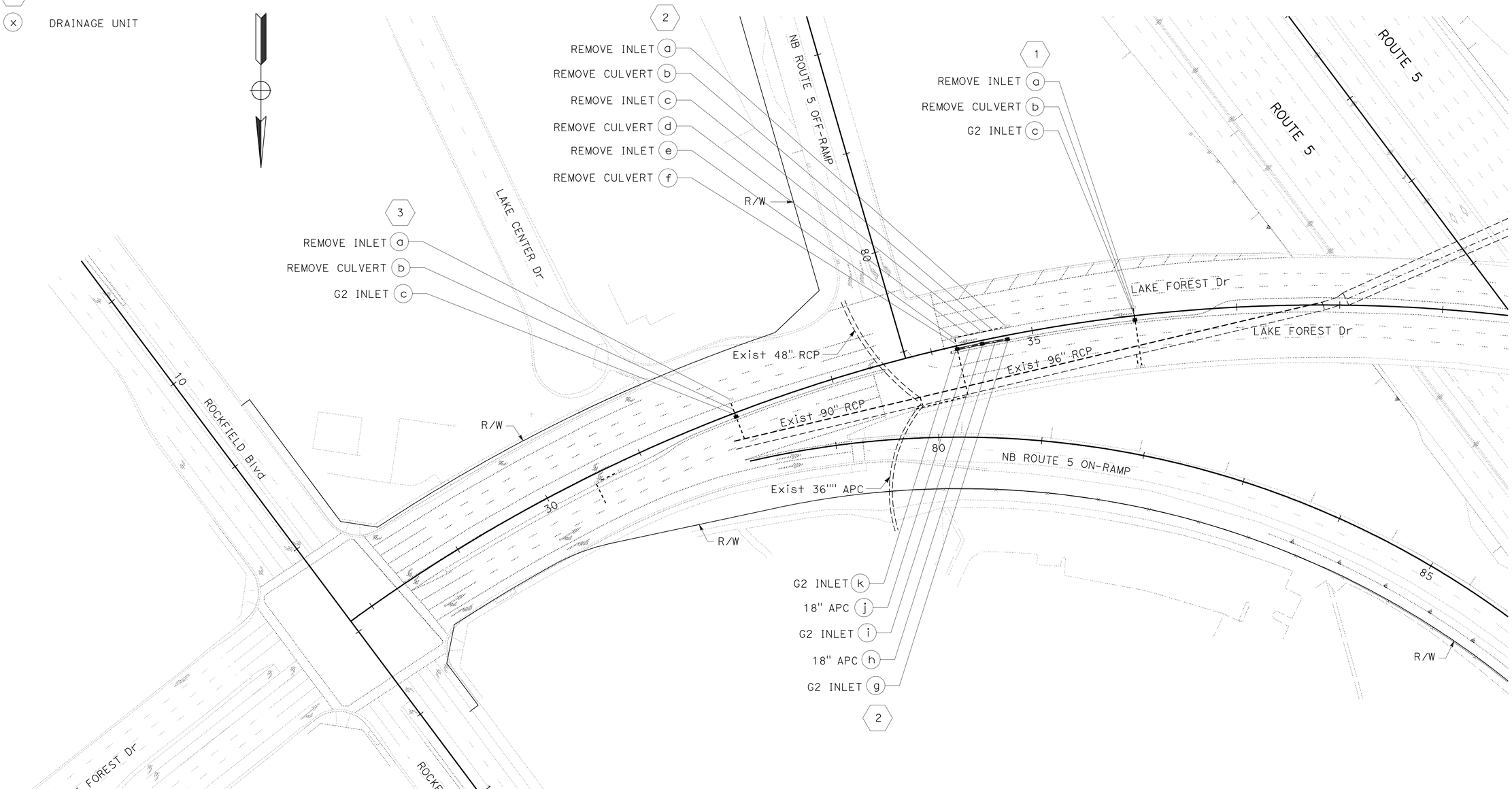

DRAINAGE PLAN

SCALE: 1" = 50'

D-1

APPROVED FOR DRAINAGE WORK ONLY

REVISED BY	DATE REVISED
PHI DINH	PHUONG NGUYEN
CALCULATED-DESIGNED BY	CHECKED BY
FUNCTIONAL SUPERVISOR	KATHY LOWE

STATE OF CALIFORNIA - DEPARTMENT OF TRANSPORTATION
Caltrans
HYDRAULICS

LAST REVISION 09-10-12 | DATE PLOTTED => 15-NOV-2012 TIME PLOTTED => 11:27

Dist	COUNTY	ROUTE	POST MILES TOTAL PROJECT	SHEET No.	TOTAL SHEETS
12	Ora	5	19.5	7	30

REGISTERED CIVIL ENGINEER 10-03-12 DATE

11-13-12
PLANS APPROVAL DATE

REGISTERED PROFESSIONAL ENGINEER
PHI DINH
No. C61179
Exp.06/30/13
CIVIL
STATE OF CALIFORNIA

THE STATE OF CALIFORNIA OR ITS OFFICERS OR AGENTS SHALL NOT BE RESPONSIBLE FOR THE ACCURACY OR COMPLETENESS OF SCANNED COPIES OF THIS PLAN SHEET.

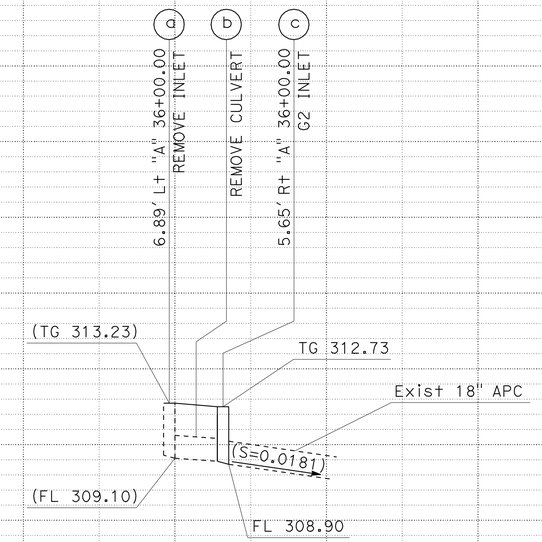

DRAINAGE SYSTEM 1

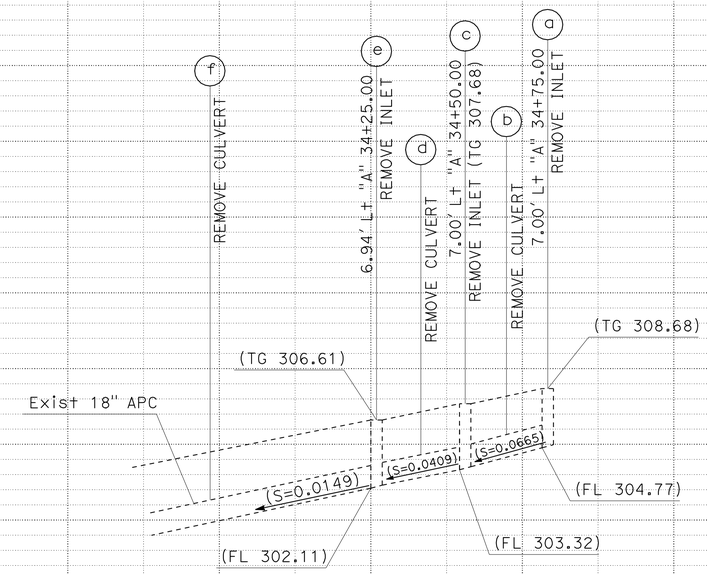

DRAINAGE SYSTEM 2

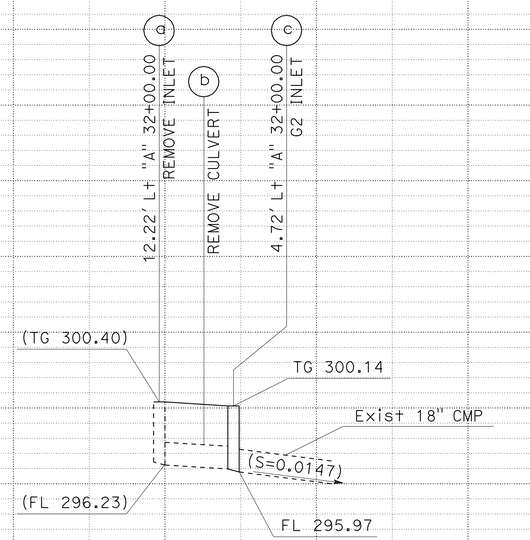

DRAINAGE SYSTEM 3

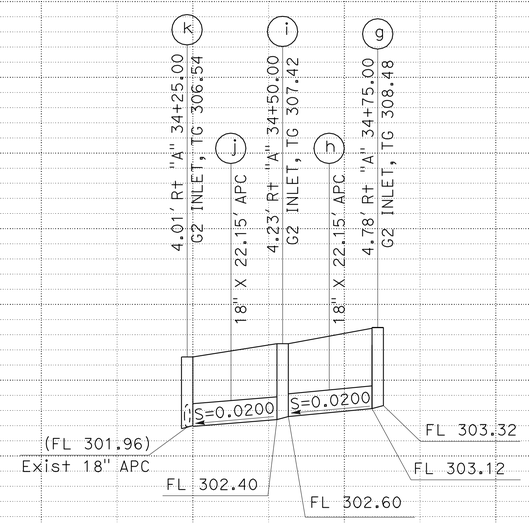

DRAINAGE SYSTEM 2

DRAINAGE PROFILES

SCALE: HORIZ 1" = 20'
VERT 1" = 5'

DP-1

STATION		TOTAL
CY	Exc	
	Emb	

STATE OF CALIFORNIA - DEPARTMENT OF TRANSPORTATION
HYDRAULICS
Caltrans
FUNCTIONAL SUPERVISOR: KATHY LOWE
CALCULATED-DESIGNED BY: PHI DINH
CHECKED BY
REVISED BY
DATE REVISED

LAST REVISION 09-10-12
DATE PLOTTED => 15-NOV-2012
TIME PLOTTED => 11:27

Dist	COUNTY	ROUTE	POST MILES TOTAL PROJECT	SHEET No.	TOTAL SHEETS
12	Ora	5	19.5	8	30

REGISTERED CIVIL ENGINEER 10-03-12 DATE

11-13-12
PLANS APPROVAL DATE

REGISTERED PROFESSIONAL ENGINEER
PHI DINH
No. C61179
Exp.06/30/13
CIVIL
STATE OF CALIFORNIA

THE STATE OF CALIFORNIA OR ITS OFFICERS OR AGENTS SHALL NOT BE RESPONSIBLE FOR THE ACCURACY OR COMPLETENESS OF SCANNED COPIES OF THIS PLAN SHEET.

DRAINAGE SYSTEM	DRAINAGE UNIT	MINOR CONCRETE (MINOR STRUCTURE) CY	MISCELLANEOUS IRON AND STEEL LB	FRAME & GRATE (24-12X) (N) EA	18" APC LF	PIPE JOINT CLASSIFICATION	REMOVE INLET EA	REMOVE CULVERT LF	"H" OR "V" LF	MAXIMUM COVER LF	DESCRIPTION	STATION	DRAINAGE PLAN SHEET	DRAINAGE SYSTEM	DRAINAGE UNIT
1	a						1				REMOVE INLET	6.89′ L+ 36+00.00 "A" LINE		1	a
	b							11.75			REMOVE CULVERT	6.89′ L+ 36+00.00 "A" LINE			b
	c	1.50	239	1					3.83		G2 INLET	5.65′ R+ 36+00.00 "A" LINE			c
2	a						1				REMOVE INLET	7.00′ L+ 34+75.00 "A" LINE		2	a
	b							18.80			REMOVE CULVERT	7.00′ L+ 34+75.00 "A" LINE			b
	c						1				REMOVE INLET	7.00′ L+ 34+50.00 "A" LINE			c
	d							20.40			REMOVE CULVERT	7.00′ L+ 34+50.00 "A" LINE			d
	e						1				REMOVE INLET	6.94′ L+ 34+25.00 "A" LINE			e
	f							11.92			REMOVE CULVERT	6.94′ L+ 34+25.00 "A" LINE			f
	g	1.80	239	1					5.16		G2 INLET	4.78′ R+ 34+75.00 "A" LINE			g
	h				22.15	S				3.70	18" APC	4.78′ R+ 34+75.00 "A" LINE			h
	i	1.76	239	1					5.02		G2 INLET	4.23′ R+ 34+50.00 "A" LINE			i
	j				22.15	S				3.50	18" APC	4.23′ R+ 34+50.00 "A" LINE			j
	k	1.67	239	1					4.58		G2 INLET	4.01′ R+ 34+25.00 "A" LINE			k
3	a						1				REMOVE INLET	12.22′ L+ 32+00.00 "A" LINE		3	a
	b							17.14			REMOVE CULVERT	12.22′ L+ 32+00.00 "A" LINE			b
	c	1.57	239	1					4.17		G2 INLET	4.72′ R+ 32+00.00 "A" LINE			c
TOTAL		8.30	1195	5	44.30		5	80.01							

(N) - NOT A PAY ITEM, FOR INFORMATION ONLY

DRAINAGE QUANTITIES
DQ-1

STATE OF CALIFORNIA - DEPARTMENT OF TRANSPORTATION
Caltrans
HYDRAULICS

FUNCTIONAL SUPERVISOR: KATHY LOWE
CALCULATED-DESIGNED BY: PHI DINH
CHECKED BY: PHUONG NGUYEN
REVISED BY
DATE REVISED

LAST REVISION 09-10-12
DATE PLOTTED => 15-NOV-2012
TIME PLOTTED => 11:27

Dist	COUNTY	ROUTE	POST MILES TOTAL PROJECT	SHEET No.	TOTAL SHEETS
12	Ora	5	19.5	9	30

Kevin D. Pham 10-03-12
REGISTERED CIVIL ENGINEER DATE

11-13-12
PLANS APPROVAL DATE

REGISTERED PROFESSIONAL ENGINEER
KEVIN D. PHAM
No. C61965
Exp. 9/30/13
CIVIL
STATE OF CALIFORNIA

THE STATE OF CALIFORNIA OR ITS OFFICERS OR AGENTS SHALL NOT BE RESPONSIBLE FOR THE ACCURACY OR COMPLETENESS OF SCANNED COPIES OF THIS PLAN SHEET.

NOTES:

1. FOR ACCURATE RIGHT OF WAY DATA, CONTACT RIGHT OF WAY ENGINEERING AT THE DISTRICT OFFICE.
2. LOCATION OF UTILITY FACILITIES SHOWN ARE APPROXIMATE AND SHALL BE VERIFIED BY THE CONTRACTOR PRIOR TO CONSTRUCTION.

ABBREVIATIONS:

ACP	ABESTOS CONCRETE PIPE
AT&T	AMERICAN TELEGRAPH AND TELEPHONE COMPANY
SCE	SOUTHERN CALIFORNIA EDISON
SCG	SOUTHERN CALIFORNIA GAS COMPANY
ELEC	ELECTRIC
IRWD	IRVINE RANCH WATER DISTRICT
OH	OVERHEAD
UG	UNDERGROUND
VCP	VITRIFIED CLAY PIPE

UTILITY OWNERSHIP:

ELECTRICITY	SOUTHERN CALIFORNIA EDISON
NATURAL GAS	SOUTHERN CALIFORNIA GAS COMPANY
TELEPHONE	AMERICAN TELEGRAPH AND TELEPHONE COMPANY
WATER & SEWER	IRVINE RANCH WATER DISTRICT

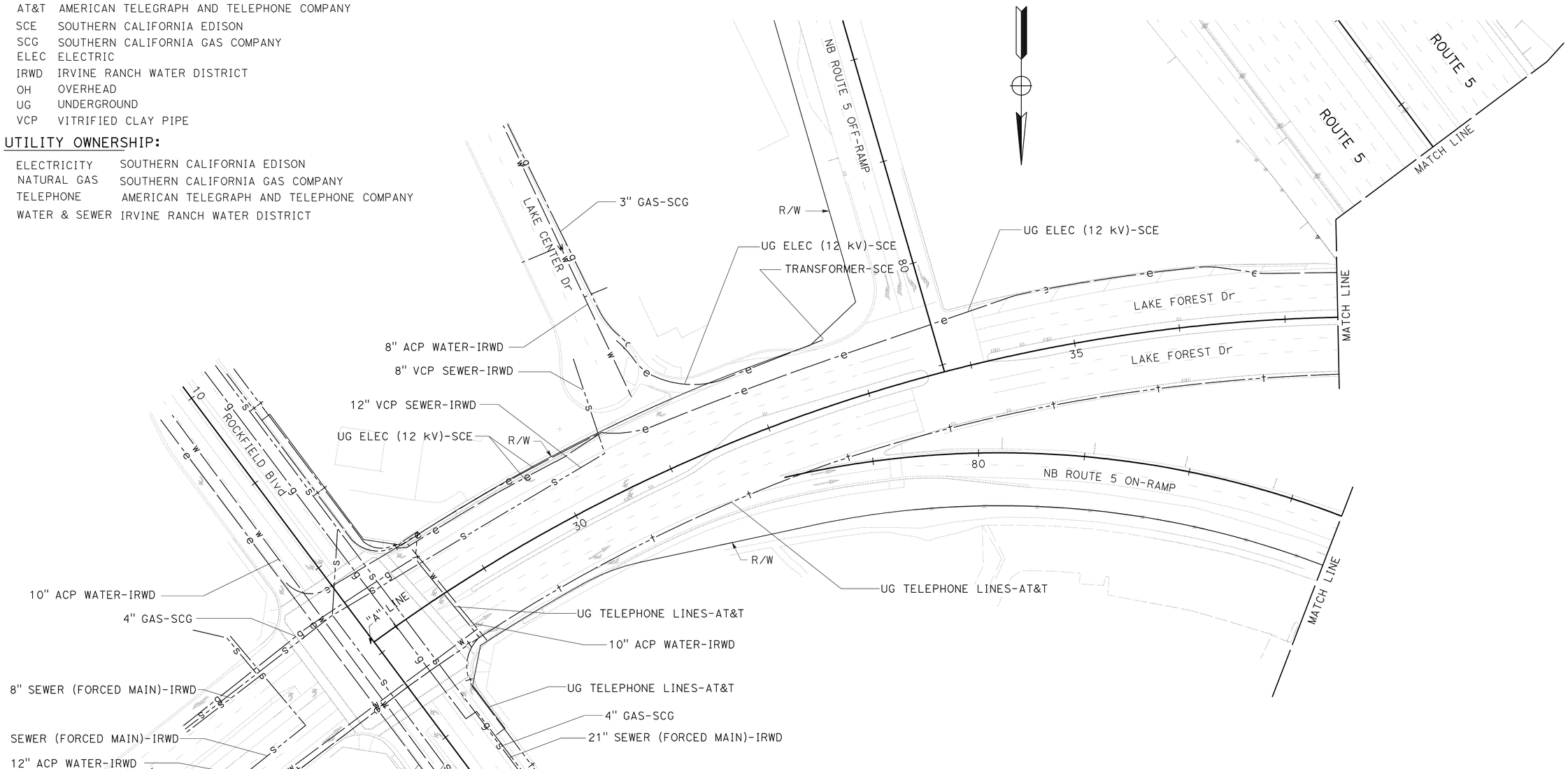

APPROVED FOR UTILITY INFORMATION ONLY

UTILITY PLAN

SCALE: 1" = 50'

U-1

MINH PHAM	MINH PHAM	MINH PHAM	7/2012
REVISED BY			DATE REVISED
MINH PHAM	KEVIN PHAM	CALCULATED-DESIGNED BY	CHECKED BY
FUNCTIONAL SUPERVISOR	CHRISTOPHER LE		

STATE OF CALIFORNIA - DEPARTMENT OF TRANSPORTATION
Caltrans® UTILITY ENGINEERING

LAST REVISION 09-10-12 | DATE PLOTTED => 15-NOV-2012 | TIME PLOTTED => 11:27

Dist	COUNTY	ROUTE	POST MILES TOTAL PROJECT	SHEET No.	TOTAL SHEETS
12	Ora	5	19.5	10	30

Kevin D. Pham 10-03-12
REGISTERED CIVIL ENGINEER DATE

11-13-12
PLANS APPROVAL DATE

REGISTERED PROFESSIONAL ENGINEER KEVIN D. PHAM No. C61965 Exp. 9/30/13 CIVIL STATE OF CALIFORNIA

THE STATE OF CALIFORNIA OR ITS OFFICERS OR AGENTS SHALL NOT BE RESPONSIBLE FOR THE ACCURACY OR COMPLETENESS OF SCANNED COPIES OF THIS PLAN SHEET.

NOTE:

1. FOR ACCURATE RIGHT OF WAY DATA, CONTACT RIGHT OF WAY ENGINEERING AT THE DISTRICT OFFICE.

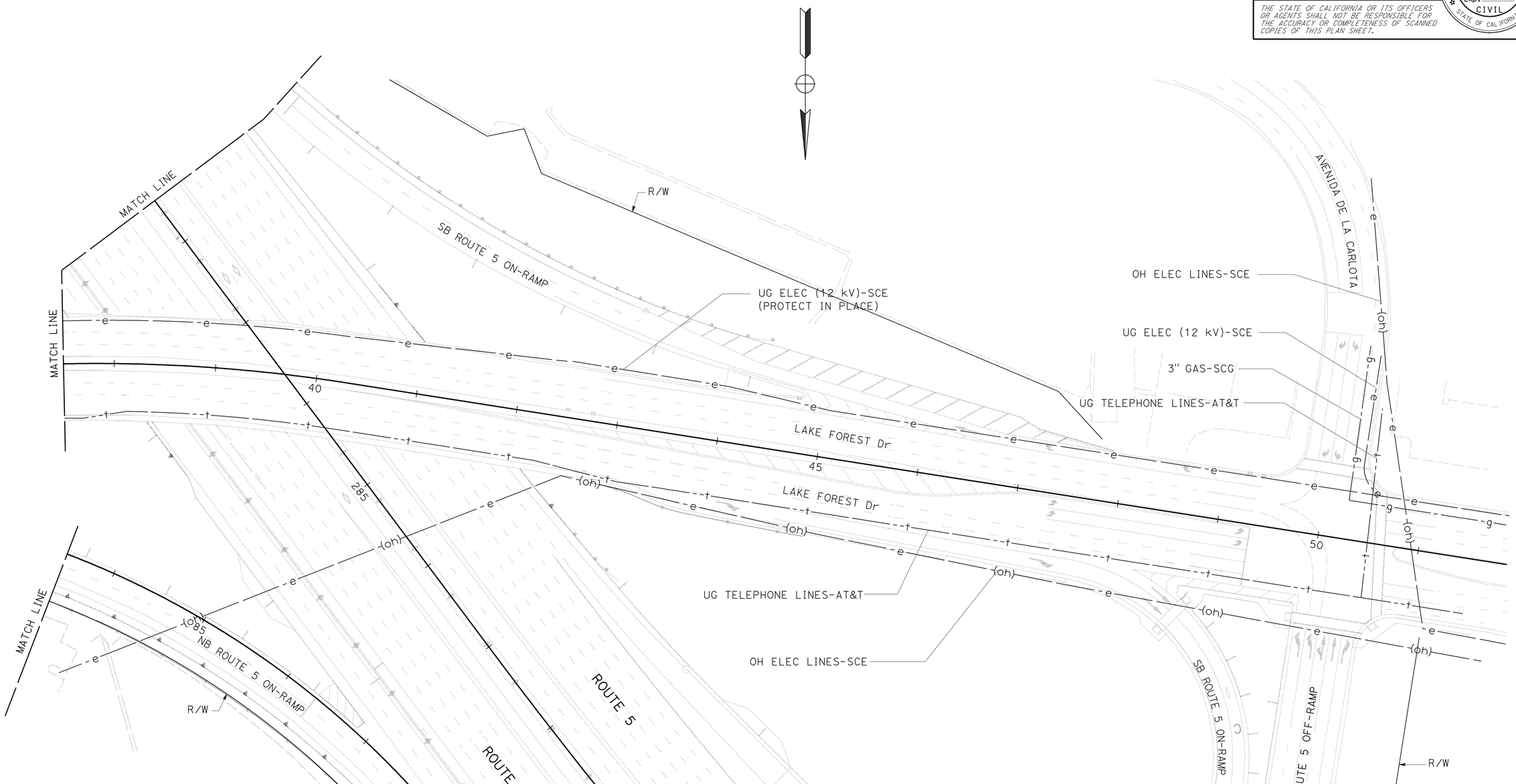

UTILITY PLAN

SCALE: 1" = 50'

U-2

APPROVED FOR UTILITY INFORMATION ONLY

STATE OF CALIFORNIA - DEPARTMENT OF TRANSPORTATION
Caltrans® UTILITY ENGINEERING

FUNCTIONAL SUPERVISOR: CHRISTOPHER LE
CALCULATED-DESIGNED BY: MINH PHAM
CHECKED BY: KEVIN PHAM
REVISED BY: MINH PHAM — DATE REVISED: 5/2012
REVISED BY: MINH PHAM — DATE REVISED: 7/2012

LAST REVISION 09-10-12
DATE PLOTTED => 15-NOV-2012
TIME PLOTTED => 11:27

BORDER LAST REVISED 7/2/2010
USERNAME => s117606
DGN FILE => 1200020237ka002.dgn
RELATIVE BORDER SCALE IS IN INCHES 0 1 2 3
UNIT 3001
PROJECT NUMBER & PHASE 12000202371

Dist	COUNTY	ROUTE	POST MILES TOTAL PROJECT	SHEET No.	TOTAL SHEETS
12	Ora	5	19.5	11	30

REGISTERED CIVIL ENGINEER 10-03-12 DATE

11-13-12
PLANS APPROVAL DATE

REGISTERED PROFESSIONAL ENGINEER FARIBA A. KHOSRAVI No. C54265 Exp. 12/31/13 CIVIL STATE OF CALIFORNIA

THE STATE OF CALIFORNIA OR ITS OFFICERS OR AGENTS SHALL NOT BE RESPONSIBLE FOR THE ACCURACY OR COMPLETENESS OF SCANNED COPIES OF THIS PLAN SHEET.

CONSTRUCTION AREA SIGNS (STATIONARY MOUNTED SIGNS)

SIGN No.	SIGN CODE	PANEL SIZE	SIGN MESSAGE	No. OF POST AND SIZES	No. OF SIGNS
A	W20-1	36" x 36"	ROAD WORK AHEAD	(1)-4"x 6"	6
B	G20-2	36" x 18"	END ROAD WORK	(1)-4"x 6"	7
C	W20-1	48" x 48"	ROAD WORK AHEAD	(2)-4"x 4"	1
D	C40(CA)	144" x 60"	TRAFFIC FINES DOUBLED IN CONSTRUCTION ZONES	(2)-8"x 8"	2

PORTABLE CHANGEABLE MESSAGE SIGN

SIGN SYMBOL	SIGN MESSAGE	No. OF SIGNS
PCMS	DETERMINED BY ENGINEER	2

NOTE:
SIGN LOCATION SHOWN ARE APPROXIMATE.
EXACT LOCATIONS TO BE DETERMINED BY THE ENGINEER

ABBREVIATION:

PCMS = PORTABLE CHANGEABLE MESSAGE SIGN

LEGEND:

▭ PCMS

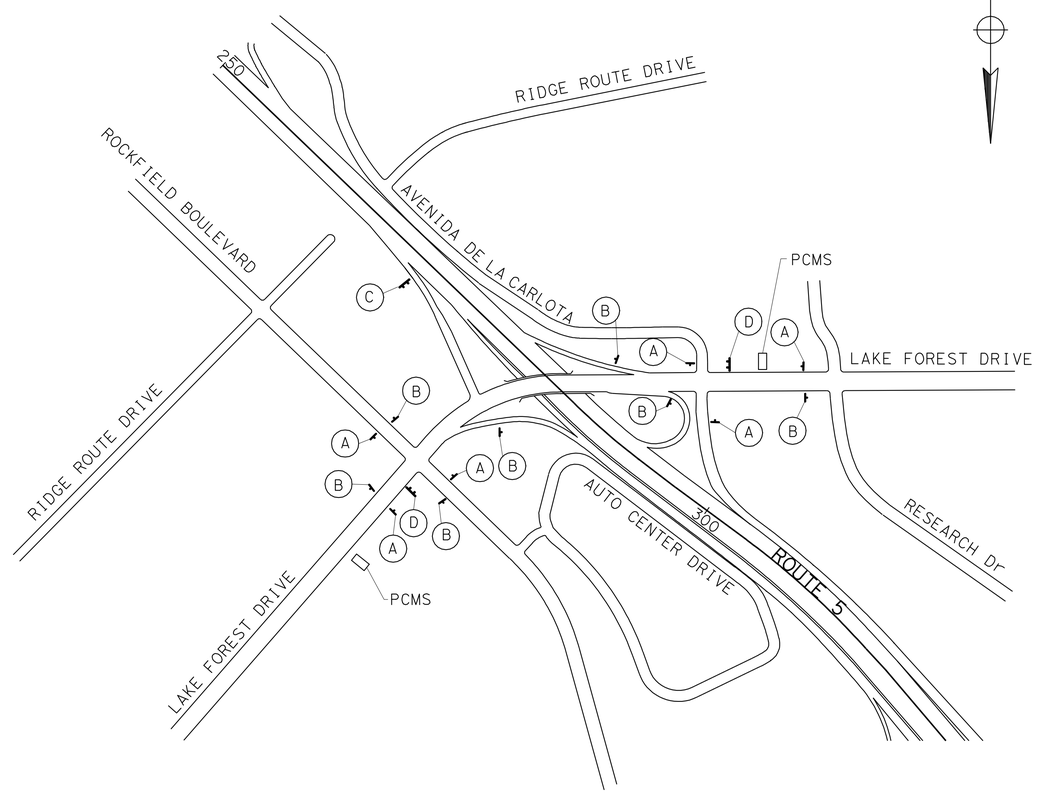

CONSTRUCTION AREA SIGNS

NO SCALE

CS-1

APPROVED FOR CONSTRUCTION AREA SIGN WORK ONLY

STATE OF CALIFORNIA - DEPARTMENT OF TRANSPORTATION
Caltrans® DESIGN BRANCH G

FUNCTIONAL SUPERVISOR: SUSAN YEE
CALCULATED-DESIGNED BY: KIMBERLY NGUYEN
CHECKED BY: FARIBA A. KHOSRAVI
REVISED BY
DATE REVISED

LAST REVISION 09-10-12
DATE PLOTTED => 15-NOV-2012
TIME PLOTTED => 11:27

Dist	COUNTY	ROUTE	POST MILES TOTAL PROJECT	SHEET No.	TOTAL SHEETS
12	Ora	5	19.5	12	30

Mostafa Aliakbarzadeh 10-03-12
REGISTERED CIVIL ENGINEER DATE

11-13-12
PLANS APPROVAL DATE

REGISTERED PROFESSIONAL ENGINEER MOSTAFA ALIAKBARZADEH No. C 54265 Exp. 12/31/13 CIVIL STATE OF CALIFORNIA

THE STATE OF CALIFORNIA OR ITS OFFICERS OR AGENTS SHALL NOT BE RESPONSIBLE FOR THE ACCURACY OR COMPLETENESS OF SCANNED COPIES OF THIS PLAN SHEET.

NOTES:

1. FOR ACCURATE RIGHT OF WAY DATA, CONTACT RIGHT OF WAY ENGINEERING AT THE DISTRICT OFFICE.
2. ALL CONFLICTING TRAFFIC STRIPES, PAVEMENT MARKINGS AND PAVEMENT MARKERS SHALL BE REMOVED.
3. TRAFFIC STRIPE AND PAVEMENT MARKINGS SHALL BE THERMOPLASTIC, UNLESS OTHERWISE NOTED.
4. EXACT LOCATIONS FOR PAVEMENT MARKINGS TO BE DETERMINED BY THE ENGINEER.

ABBREVIATIONS:

F FWY
O ONLY
S SIGNAL
A AHEAD

LEGEND:

(X) PAVEMENT DELINEATION DETAIL NUMBER
CHANGE IN PAVEMENT DELINEATION DETAIL
END OF PAVEMENT DELINEATION DETAIL
DIRECTION OF TRAFFIC

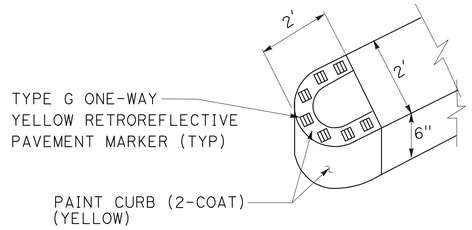

DETAIL B

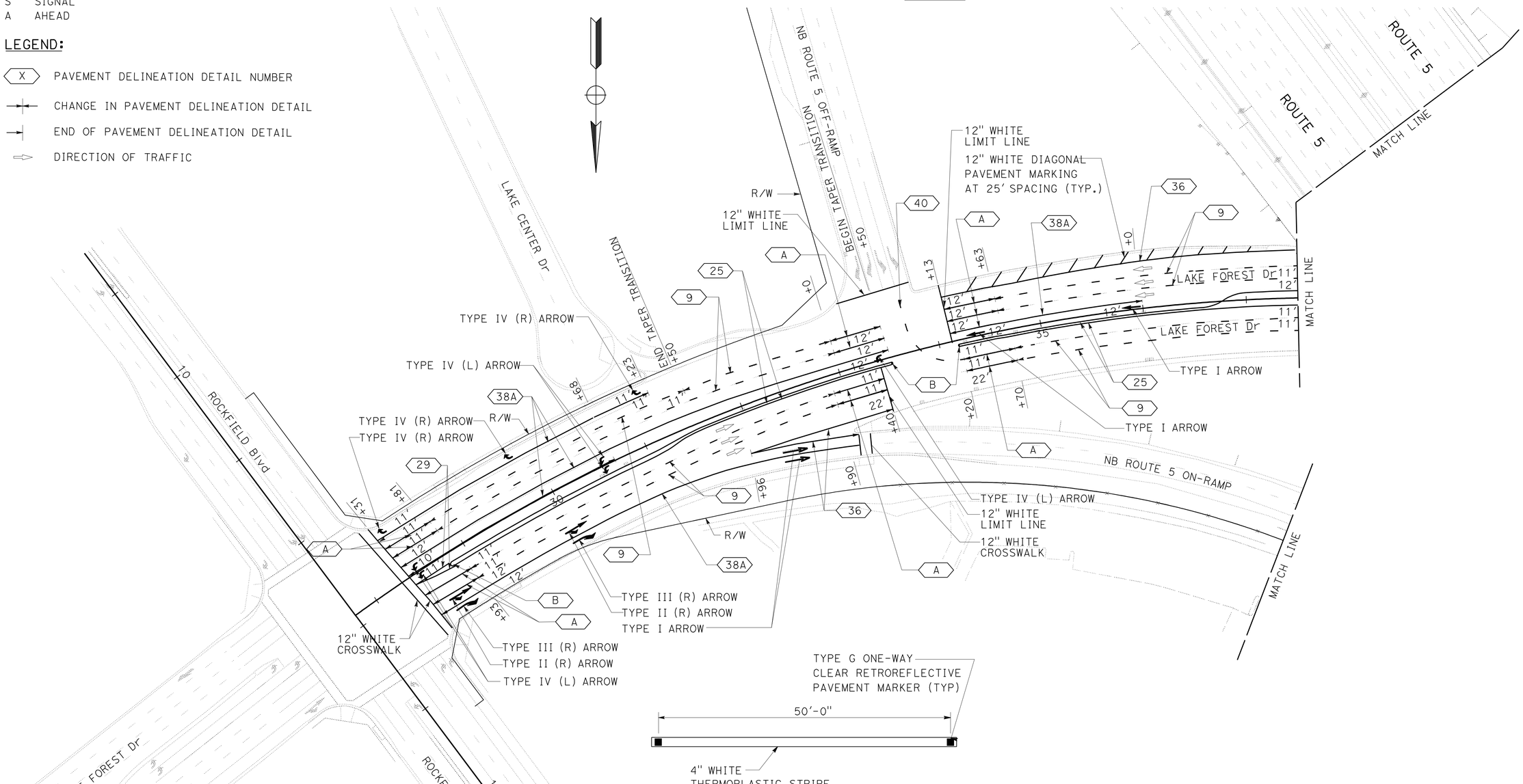

DETAIL A

PAVEMENT DELINEATION PLAN

SCALE: 1" = 50'

APPROVED FOR PAVEMENT DELINEATION ONLY

PD-1

STATE OF CALIFORNIA - DEPARTMENT OF TRANSPORTATION
Caltrans® DESIGN BRANCH G
FUNCTIONAL SUPERVISOR: SON NGUYEN
CALCULATED-DESIGNED BY: RICHARD DANG
CHECKED BY: MOSTAFA ALIAKBARZADEH
REVISED BY / DATE REVISED

LAST REVISION 09-19-12 | DATE PLOTTED => 15-NOV-2012 | TIME PLOTTED => 11:06

BORDER LAST REVISED 7/2/2010 | USERNAME => s123631 | DGN FILE => 1200020237na001.dgn | RELATIVE BORDER SCALE IS IN INCHES 0 1 2 3 | UNIT 3004 | PROJECT NUMBER & PHASE 12000202371

Dist	COUNTY	ROUTE	POST MILES TOTAL PROJECT	SHEET No.	TOTAL SHEETS
12	Ora	5	19.5	13	30

Mostafa Aliakbazadeh 10-03-12
REGISTERED CIVIL ENGINEER DATE

11-13-12
PLANS APPROVAL DATE

REGISTERED PROFESSIONAL ENGINEER
MOSTAFA ALIAKBAZADEH
No. C 54265
Exp. 12/31/13
CIVIL
STATE OF CALIFORNIA

THE STATE OF CALIFORNIA OR ITS OFFICERS OR AGENTS SHALL NOT BE RESPONSIBLE FOR THE ACCURACY OR COMPLETENESS OF SCANNED COPIES OF THIS PLAN SHEET.

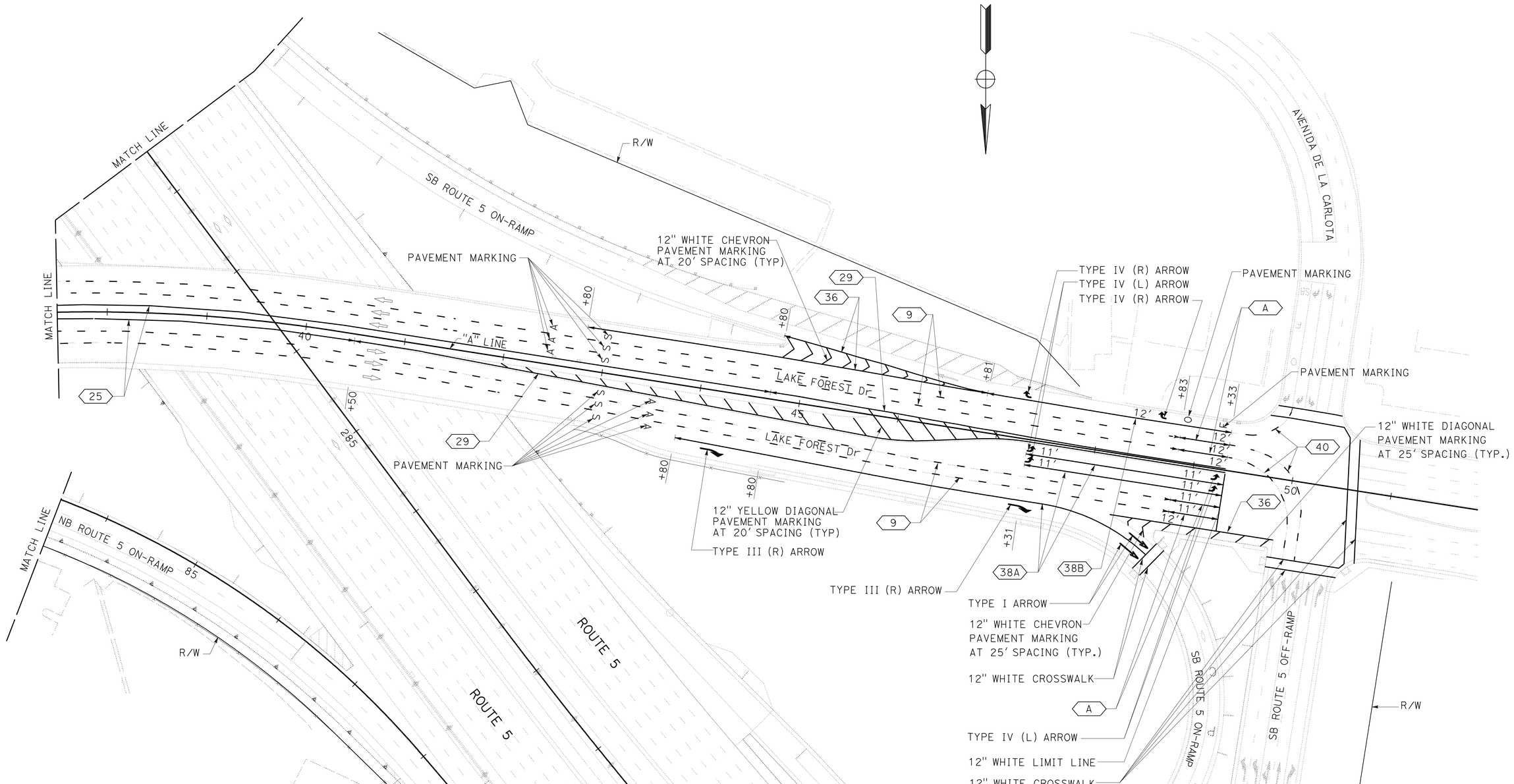

PAVEMENT DELINEATION PLAN

SCALE: 1" = 50'

APPROVED FOR PAVEMENT DELINEATION ONLY

PD-2

STATE OF CALIFORNIA - DEPARTMENT OF TRANSPORTATION
Caltrans® DESIGN BRANCH G

FUNCTIONAL SUPERVISOR: SON NGUYEN
CALCULATED-DESIGNED BY: RICHARD DANG
CHECKED BY: MOSTAFA ALIAKBAZADEH
REVISED BY
DATE REVISED

LAST REVISION 09-19-12
DATE PLOTTED => 15-NOV-2012
TIME PLOTTED => 11:06

Dist	COUNTY	ROUTE	POST MILES TOTAL PROJECT	SHEET No.	TOTAL SHEETS
12	Ora	5	19.5	14	30

Mostafa Aliakbarzadeh 10-03-12
REGISTERED CIVIL ENGINEER DATE

11-13-12
PLANS APPROVAL DATE

REGISTERED PROFESSIONAL ENGINEER
MOSTAFA ALIAKBARZADEH
No. C 54265
Exp. 12/31/13
CIVIL
STATE OF CALIFORNIA

THE STATE OF CALIFORNIA OR ITS OFFICERS OR AGENTS SHALL NOT BE RESPONSIBLE FOR THE ACCURACY OR COMPLETENESS OF SCANNED COPIES OF THIS PLAN SHEET.

PAVEMENT DELINEATION QUANTITIES

SHEET No.	LOCATION-DESCRIPTION		THERMOPLASTIC TRAFFIC STRIPE							THERMOPLASTIC PAVEMENT MARKING				PAINT CURB (2-COAT) PAVEMENT MARKING (YELLOW)	PAVEMENT MARKER			REMOVE			
			4"		4"			8"							RETRO-REFLECTIVE						
		DETAIL B (N)	DETAIL 40 BROKEN WHITE (6-1)	DETAIL 9 BROKEN WHITE (17-7)	DETAIL 25	DETAIL 29	DETAIL A SOLID WHITE	DETAIL 36 SOLID WHITE	DETAIL 38A / 38B SOLID WHITE	CHEVRON/ DIAGONAL	ARROW	CROSS WALK & LIMIT LINE	WORD		TYPE D	TYPE G	TYPE H	THERMOPLASTIC TRAFFIC STRIPE (WHITE)	YELLOW THERMOPLASTIC TRAFFIC STRIPE (HAZARDOUS WASTE)	THERMOPLASTIC PAVEMENT MARKING	PAVEMENT MARKER
		LF	LF	LF	LF	LF	LF	LF	LF	SQFT	SQFT	SQFT	SQFT	SQFT	EA	EA	EA	LF	LF	SQFT	EA
PD-1	LAKE FOREST Dr	12	130	2990	1612	400	600	245	1631	216	404	461		30	41	368	21	2734	600	856	430
PD-2	LAKE FOREST Dr		300	4532	1030	5654	200	618	1106	850	222	539	416		484	115		2927	5654	2027	599
SUB-TOTAL			430	7522	2642	6054	800	863	2737	1066	626	1000	416	30	525	483	21	5661	6254	2883	1029
GRAND TOTAL		12	430	7522	9496			3600		3108				30	1029			5661	6254	2883	1029

(N) - NOT A PAY ITEM, FOR INFORMATION ONLY

PAVEMENT DELINEATION QUANTITIES

PDQ-1

STATE OF CALIFORNIA - DEPARTMENT OF TRANSPORTATION
Caltrans® DESIGN BRANCH I

FUNCTIONAL SUPERVISOR: SON NGUYEN
CALCULATED-DESIGNED BY: RICHARD DANG
CHECKED BY: MOSTAFA ALIAKBARZADEH
REVISED BY
DATE REVISED

LAST REVISION 09-19-12 | DATE PLOTTED => 15-NOV-2012 | TIME PLOTTED => 11:06

Dist	COUNTY	ROUTE	POST MILES TOTAL PROJECT	SHEET No.	TOTAL SHEETS
12	Ora	5	19.5	15	30

Mostafa Aliakbarzadeh 10-03-12
REGISTERED CIVIL ENGINEER DATE

11-13-12
PLANS APPROVAL DATE

REGISTERED PROFESSIONAL ENGINEER
MOSTAFA ALIAKBARZADEH
No. C 54265
Exp. 12/31/13
CIVIL
STATE OF CALIFORNIA

THE STATE OF CALIFORNIA OR ITS OFFICERS OR AGENTS SHALL NOT BE RESPONSIBLE FOR THE ACCURACY OR COMPLETENESS OF SCANNED COPIES OF THIS PLAN SHEET.

NOTES:

1. EXACT LOCATIONS OF ROADSIDE SIGNS WILL BE DETERMINED BY THE ENGINEER.
2. PROTECT ALL SIGNS IN PLACE UNLESS OTHERWISE NOTED.

ABBREVIATIONS:

PL PROTECT SIGN INPLACE
IS INSTALL ROADSIDE SIGN
RS REMOVE ROADSIDE SIGN
ISB INSTALL ROADSIDE SIGN (STRAP AND SADDLE BRACKET METHOD)
RSB REMOVE ROADSIDE SIGN (STRAP AND SADDLE BRACKET METHOD)

LEGEND:

(X) ROADSIDE SIGN IDENTIFICATION DETAIL
ROADSIDE SIGN (ONE POST)
ROADSIDE SIGN (TWO POST)

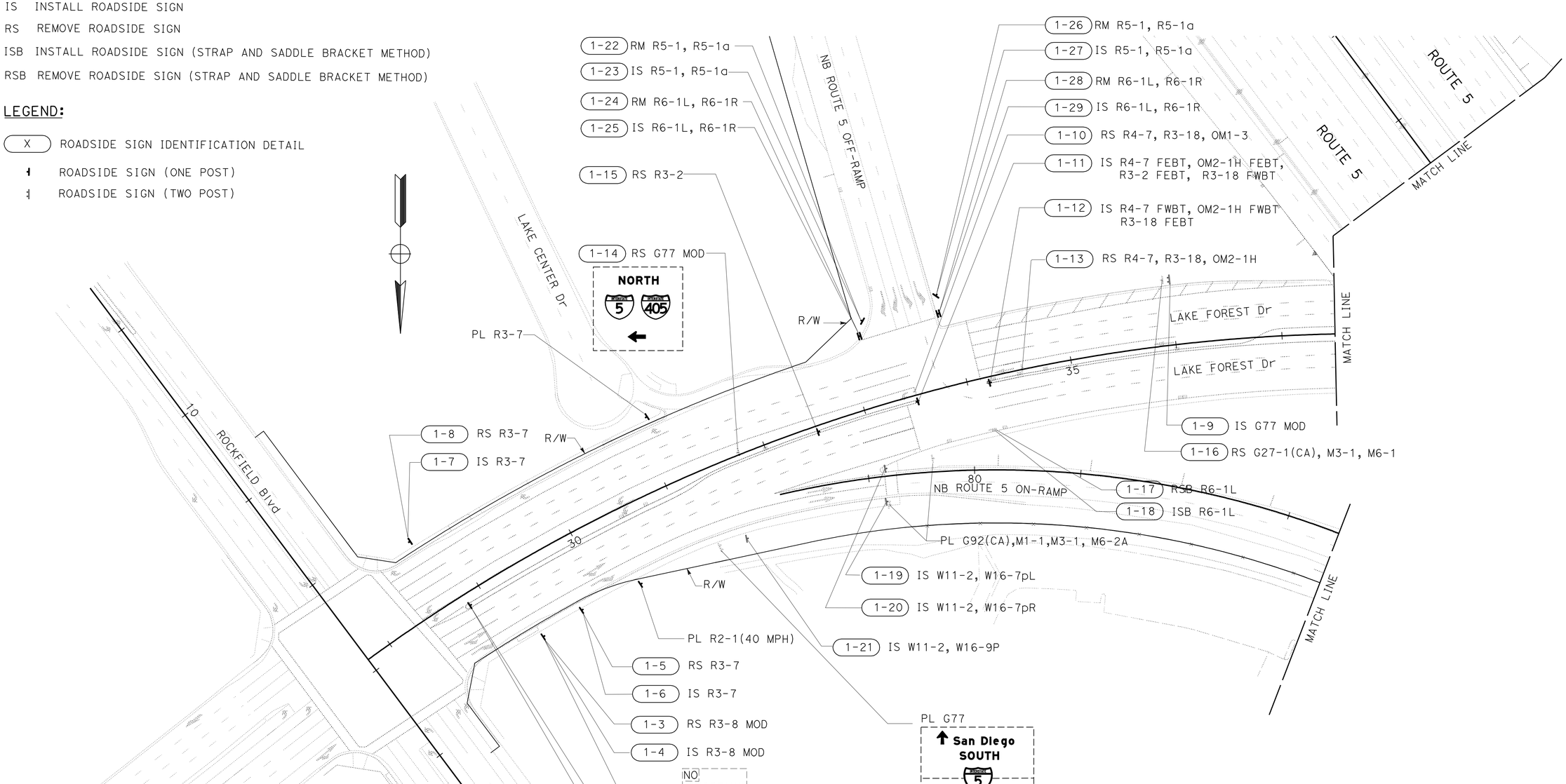

SIGN PLAN

SCALE: 1" = 50'

APPROVED FOR SIGN ONLY

S-1

STATE OF CALIFORNIA - DEPARTMENT OF TRANSPORTATION
Caltrans DESIGN BRANCH G
FUNCTIONAL SUPERVISOR: SON NGUYEN
CALCULATED-DESIGNED BY: RICHARD DANG
CHECKED BY: MOSTAFA ALIAKBARZADEH
REVISED BY
DATE REVISED

LAST REVISION 09-19-12
DATE PLOTTED => 15-NOV-2012
TIME PLOTTED => 11:06

Dist	COUNTY	ROUTE	POST MILES TOTAL PROJECT	SHEET No.	TOTAL SHEETS
12	Ora	5	19.5	16	30

Mostafa Aliakbazadeh 10-03-12
REGISTERED CIVIL ENGINEER DATE

11-13-12
PLANS APPROVAL DATE

REGISTERED PROFESSIONAL ENGINEER
MOSTAFA ALIAKBAZADEH
No. C 54265
Exp. 12/31/13
CIVIL
STATE OF CALIFORNIA

THE STATE OF CALIFORNIA OR ITS OFFICERS OR AGENTS SHALL NOT BE RESPONSIBLE FOR THE ACCURACY OR COMPLETENESS OF SCANNED COPIES OF THIS PLAN SHEET.

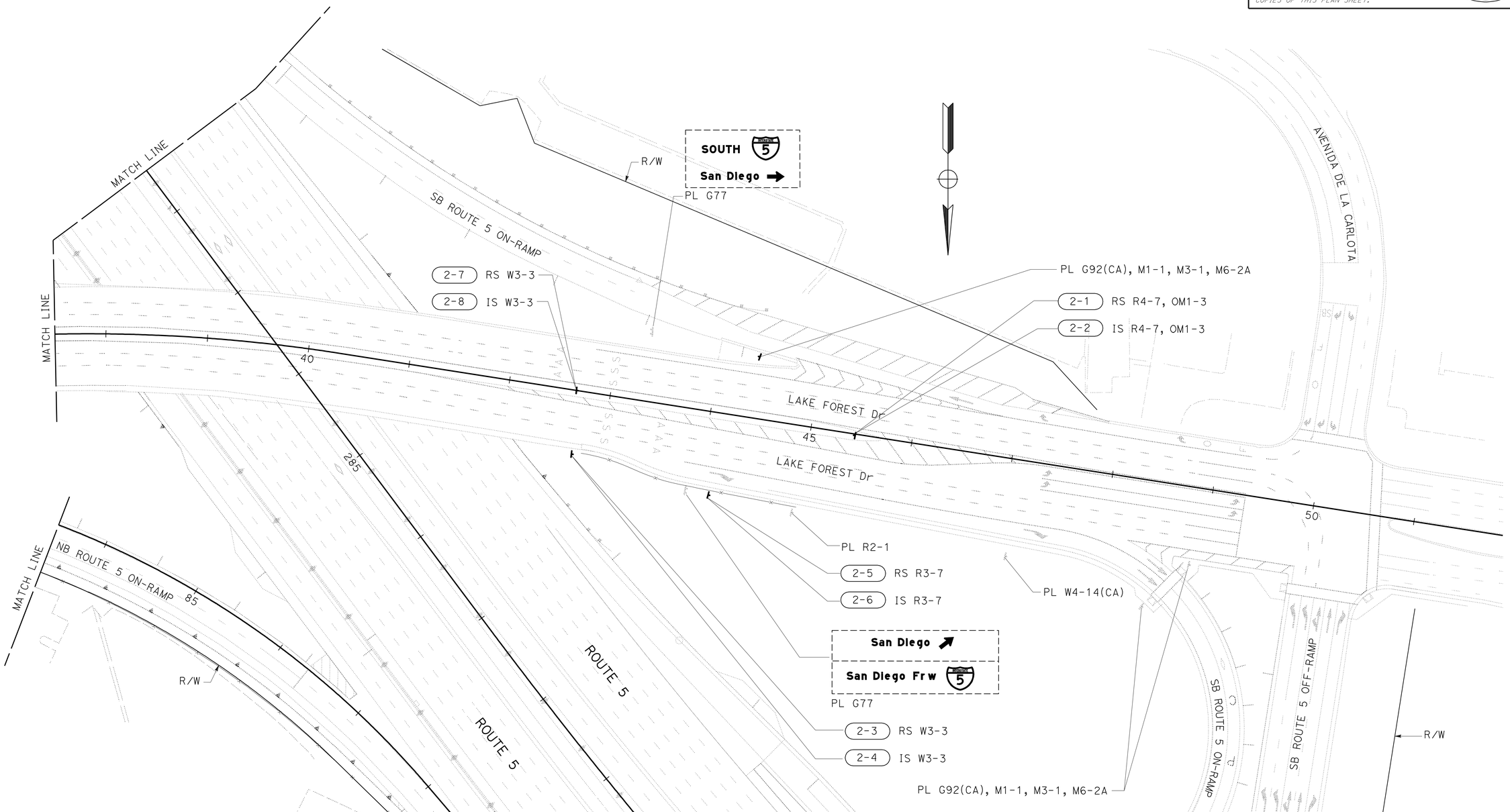

SIGN PLAN

SCALE: 1" = 50'

APPROVED FOR SIGN WORK ONLY

S-2

STATE OF CALIFORNIA - DEPARTMENT OF TRANSPORTATION
Caltrans® DESIGN BRANCH G

FUNCTIONAL SUPERVISOR: SON NGUYEN
CALCULATED-DESIGNED BY: RICHARD DANG
CHECKED BY: MOSTAFA ALIAKBAZADEH
REVISED BY
DATE REVISED

LAST REVISION 09-19-12
DATE PLOTTED => 15-NOV-2012
TIME PLOTTED => 11:06

Dist	COUNTY	ROUTE	POST MILES TOTAL PROJECT	SHEET No.	TOTAL SHEETS
12	Ora	5	19.5	17	30

Mostafa Aliakbazadeh 10-03-12
REGISTERED CIVIL ENGINEER DATE

11-13-12
PLANS APPROVAL DATE

REGISTERED PROFESSIONAL ENGINEER
MOSTAFA ALIAKBAZADEH
No. C 54265
Exp. 12/31/13
CIVIL
STATE OF CALIFORNIA

THE STATE OF CALIFORNIA OR ITS OFFICERS OR AGENTS SHALL NOT BE RESPONSIBLE FOR THE ACCURACY OR COMPLETENESS OF SCANNED COPIES OF THIS PLAN SHEET.

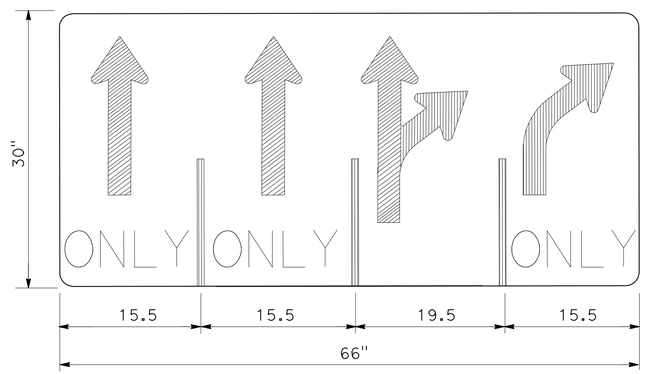

1-4 R3-8 MOD

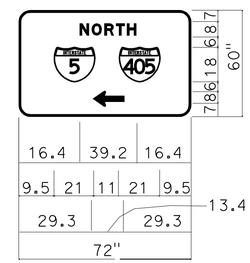

6.0" RADIUS, 1.3" BORDER, WHITE ON GREEN;
ARROW CUSTOM - 8.0" 90{; [NORTH] E MOD;
STANDARD ARROW CUSTOM 13.4" X 8.1" 0{;

1-9 G77 MOD

SIGN DETAIL

NO SCALE

SD-1

STATE OF CALIFORNIA - DEPARTMENT OF TRANSPORTATION
Caltrans® DESIGN BRANCH I

FUNCTIONAL SUPERVISOR: SON NGUYEN
CALCULATED-DESIGNED BY: RICHARD DANG
CHECKED BY: MOSTAFA ALIAKBAZADEH
REVISED BY
DATE REVISED

LAST REVISION 09-19-12
DATE PLOTTED => 15-NOV-2012
TIME PLOTTED => 11:06

Dist	COUNTY	ROUTE	POST MILES TOTAL PROJECT	SHEET No.	TOTAL SHEETS
12	Ora	5	19.5	18	30

Mostafa Aliakbarzadeh 10-03-12
REGISTERED CIVIL ENGINEER DATE

11-13-12
PLANS APPROVAL DATE

REGISTERED PROFESSIONAL ENGINEER
MOSTAFA ALIAKBARZADEH
No. C 54265
Exp. 12/31/13
CIVIL
STATE OF CALIFORNIA

THE STATE OF CALIFORNIA OR ITS OFFICERS OR AGENTS SHALL NOT BE RESPONSIBLE FOR THE ACCURACY OR COMPLETENESS OF SCANNED COPIES OF THIS PLAN SHEET.

ROADSIDE SIGNS QUANTITIES

SHEET NO.	SIGN NO.	CODE	PANEL SIZE	POST SIZE & LENGTH	REMOVE ROADSIDE SIGN	REMOVE ROADSIDE SIGN (STRAP AND SADDLE BRACKET)	ROADSIDE SIGN (ONE POST)	ROADSIDE SIGN (TWO POST)	INSTALL SIGN STRAP AND SADDLE BRACKET
			IN	6 x 6 F†	EA	EA	EA	EA	EA
S-1	1-1	R4-7, R6-2, OM1-3	EXISTING		1				
	1-2	R4-7	18" x 24"	14			1		
		R3-18	24" x 24"						
		OM1-3	18" x 18"						
		R6-2	18" x 24"						
	1-3	R3-8 MOD	EXISTING		1				
	1-4	R3-8 MOD	30" x 65"	15				1	
	1-5	R3-7	EXISTING		1				
	1-6	R3-7	30" x 30"	12			1		
	1-7	R3-7	30" x 30"	12			1		
	1-8	R3-7	EXISTING		1				
	1-9	G77 MOD	72" x 60"	15				1	
	1-10	R4-7, R3-18, OM1-3	EXISTING		1				
	1-11	R4-7	18" x 24"	16			1		
		OM2-1H	6" x 12"						
		R3-2	24" x 24"						
		R3-18	24" x 24"						
	1-12	R4-7	18" x 24"	16			1		
		OM2-1H	6" x 12"						
		R3-18	24" x 24"						
	1-13	R4-7, R3-18, OM2-1H	EXISTING		1				
	1-14	G77 MOD	EXISTING		1				
	1-15	R3-2	EXISTING		1				
	1-16	G-27-1(CA), M3-1, M6-1	EXISTING		1				
	1-17	R6-1L	EXISTING			1			
	1-18	R6-1L	36" x 12"						1
	1-19	W11-2	30" x 30"	16			1		
		W16-7pL	24" x 12"						
	1-20	W11-2	30" x 30"	16			1		
		W16-7pR	24" x 12"						
	1-21	W11-2	30" x 30"	16			1		
		W16-9P	24" x 12"						
	1-22	R5-1, R5-1a	EXISTING		1				
	1-23	R5-1	48" x 48"	17			1		
		R5-1a	36" x 24"						
	1-24	R6-1L, R6-1R	EXISTING		1				
	1-25	R6-1L	36" x 12"	6			1		
		R6-1R	36" x 12"						
	1-26	R5-1, R5-1a	EXISTING		1				
	1-27	R5-1	48" x 48"	17			1		
		R5-1a	36" x 24"						
	1-28	R6-1L, R6-1R	EXISTING		1				
	1-29	R6-1L	36" x 12"	6			1		
		R6-1R	36" x 12"						
S-2	2-1	R4-7, OM1-3	EXISTING		1				
	2-2	R4-7	18" x 24"	13			1		
		OM1-3	18" x 18"						
	2-3	W3-3	EXISTING		1				
	2-4	W3-3	48" x 48"	12.5			1		
	2-5	R3-7	EXISTING		1				
	2-6	R3-7	30" x 30"	12			1		
	2-7	W3-3	EXISTING		1				
	2-8	W3-3	48" x 48"				1		
TOTAL					17	1	16	2	1

SIGN QUANTITIES

SQ-1

STATE OF CALIFORNIA - DEPARTMENT OF TRANSPORTATION
Caltrans® DESIGN BRANCH I

FUNCTIONAL SUPERVISOR: SON NGUYEN
CALCULATED-DESIGNED BY: MOSTAFA ALIAKBARZADEH
CHECKED BY: RICHARD DANG
REVISED BY
DATE REVISED

LAST REVISION 09-19-12 | DATE PLOTTED => 15-NOV-2012 | TIME PLOTTED => 11:06

Dist	COUNTY	ROUTE	POST MILES TOTAL PROJECT	SHEET No.	TOTAL SHEETS
12	Ora	5	19.5	19	30

Mostafa Aliakbarzadeh 10-03-12
REGISTERED CIVIL ENGINEER DATE

11-13-12
PLANS APPROVAL DATE

REGISTERED PROFESSIONAL ENGINEER
MOSTAFA ALIAKBARZADEH
No. C 54265
Exp. 12/31/13
CIVIL
STATE OF CALIFORNIA

THE STATE OF CALIFORNIA OR ITS OFFICERS OR AGENTS SHALL NOT BE RESPONSIBLE FOR THE ACCURACY OR COMPLETENESS OF SCANNED COPIES OF THIS PLAN SHEET.

MATERIAL SUMMARY (CONTRACTOR FURNISHED SIGNS)

SHEET No.	SIGN No. (X)	SIGN CODE	PANEL SIZE (inch x inch)	SIGN AREA (SQFT)	SINGLE FACED	PROTECTIVE OVERLAY	BACKGROUND SHEETING COLOR	BACKGROUND RETROREFLECTIVE ASTM TYPE	LEGEND SHEETING COLOR	LEGEND RETROREFLECTIVE ASTM TYPE	ROADSIDE SIGN: FURNISH SINGLE SHEET ALUMINUM SIGN UNFRAMED 0.063" SQFT
S-1	1-2	R4-7	18" x 24"	3	x	N/A	W	VII	B	VII	3
		R3-18	24" x 24"	4	x	N/A	W	VII	B/R	VII	4
		OM1-3	18" x 18"	2.25	x	N/A	Y	VII		VII	2.25
		R6-2	18" x 24"	3	x	N/A	W	VII	B	VII	3
	1-4	R3-8 MOD	30" x 65"	13.55	x	N/A	W	VII	B	VII	13.55
	1-6	R3-7	30" x 30"	6.25	x	N/A	W	VII	B	VII	6.25
	1-7	R3-7	30" x 30"	6.25	x	N/A	W	VII	B	VII	6.25
	1-9	G77 MOD	72" x 60"	30	x	N/A	G	VII	W	VII	30
	1-11	R4-7	18" x 24"	3	x	N/A	W	VII	B	VII	3
		OM2-1H	6" x 12"	0.5	x	N/A	Y	VII		VII	0.5
		R3-18	24" x 24"	4	x	N/A	W	VII	B/R	VII	4
		R3-2	24" x 24"	4	x	N/A	W	VII	B/R	VII	4
	1-12	R4-7	18" x 30"	3	x	N/A	W	VII	B	VII	3
		OM2-1H	6" x 12"	0.5	x	N/A	Y	VII		VII	0.5
		R3-18	24" x 24"	4	x	N/A	W	VII	B/R	VII	4
	1-18	R6-1L	36" x 12"	3	x	N/A	B	VII	B/W	VII	3
	1-19	W11-2	30" x 30"	6.25	x	N/A	Y	VII	B	VII	6.25
		W16-7pL	24" x 12"	2	x	N/A	Y	VII	B	VII	2
	1-20	W11-2	30" x 30"	6.25	x	N/A	Y	VII	B	VII	6.25
		W16-7pR	24" x 12"	2	x	N/A	Y	VII	B	VII	2
	1-21	W11-2	30" x 30"	6.25	x	N/A	Y	VII	B	VII	6.25
		W16-9P	24" x 12"	2	x	N/A	Y	VII	B	VII	2
	1-23	R5-1	48" x 48"	16	x	N/A	W	VII	W/R	VII	16
		R5-1a	36" x 24"	6	x	N/A	W	VII	W/R	VII	6
	1-25	R6-1L	36" x 12"	3	x	N/A	B	VII	B/W	VII	3
		R6-1R	36" x 12"	3	x	N/A	B	VII	B/W	VII	3
	1-27	R5-1	48" x 48"	16	x	N/A	W	VII	W/R	VII	16
		R5-1a	36" x 24"	6	x	N/A	W	VII	W/R	VII	6
	1-29	R6-1L	36" x 12"	3	x	N/A	B	VII	B/W	VII	3
		R6-1R	36" x 12"	3	x	N/A	B	VII	B/W	VII	3
S-2	2-2	R4-7	18" x 24"	3	x	N/A	W	VII	B	VII	3
		OM1-3	18" x 18"	2.25	x	N/A	Y	VII		VII	2.25
	2-4	W3-3	48" x 48"	16	x	N/A	Y	VII	B	VII	16
	2-6	R3-7	30" x 30"	6.25	x	N/A	W	VII	B	VII	6.25
	2-8	W3-3	48" x 48"	16	x	N/A	Y	VII	B	VII	16
										TOTAL	214.55

ABBREVIATION:

Y = YELLOW
B = BLACK
R = RED
W = WHITE
Non = NON-REFLECTIVE
N/A = NOT APPLICAPLE

SIGN QUANTITIES

SQ-2

STATE OF CALIFORNIA - DEPARTMENT OF TRANSPORTATION
Caltrans® DESIGN BRANCH I

FUNCTIONAL SUPERVISOR: SON NGUYEN
CALCULATED-DESIGNED BY: RICHARD DANG
CHECKED BY: MOSTAFA ALIAKBARZADEH
REVISED BY
DATE REVISED

LAST REVISION 09-19-12
DATE PLOTTED => 15-NOV-2012
TIME PLOTTED => 11:07

Dist	COUNTY	ROUTE	POST MILES TOTAL PROJECT	SHEET No.	TOTAL SHEETS
12	Ora	5	19.5	20	30

REGISTERED CIVIL ENGINEER 10-03-12 DATE

11-13-12
PLANS APPROVAL DATE

REGISTERED PROFESSIONAL ENGINEER KIMBERLY NGUYEN No. C 64577 Exp. 6/30/13 CIVIL STATE OF CALIFORNIA

THE STATE OF CALIFORNIA OR ITS OFFICERS OR AGENTS SHALL NOT BE RESPONSIBLE FOR THE ACCURACY OR COMPLETENESS OF SCANNED COPIES OF THIS PLAN SHEET.

WATER POLLUTION CONTROL QUANTITIES

	STATION LIMITS	DIRECTION	TEMPORARY DRAINAGE INLET PROTECTION		
			TYPE 3A	TYPE 5	TYPE 6B
			EA		
L-1	"A" 29+00 TO 37+00	NB & SB	4	11	2
L-2	"A" 40+00 TO 50+00	NB & SB	1	5	4
TOTAL			27		

MINOR CONCRETE

SHEET No.	LOCATION	STATION LIMITS	MINOR CONCRETE	
			CURB	ISLAND PAVING
			CY	CY
L-1	Lt & Rt	"A" 31+10.00 TO 33+52.00	12.7	6.3
	Lt & Rt	"A" 34+18.00 TO 37+00.00	14.7	11.9
TOTAL			27.4	18.2

EARTHWORK QUANTITIES

SHEET No.	LOCATION	STATION LIMITS	ROADWAY EXCAVATION	IMPORTED BORROW
			CY	CY
L-1	Lt & Rt	"A" 31+10.00 TO 33+58.10	526.5	236.9
	Lt & Rt	"A" 34+16.78 TO 37+00.00	575.0	258.8
TOTAL			1101.5	495.7

REMOVE CONCRETE

SHEET No.	LOCATION	STATION LIMITS	REMOVE CONCRETE	
			CURB	ISLAND (PORTIONS)
			LF	CY
L-1	Lt & Rt	"A" 31+10.00 TO 33+58.10	512	66
	Lt & Rt	"A" 34+16.78 TO 37+00.00	570	72
TOTAL			1082	138

ROADWAY QUANTITIES

SHEET No.	LOCATION	STATION LIMITS	HOT MIX ASPHALT (TYPE A)	RUBBERIZED HOT MIX ASPHALT (GAP GRADED)	PLACE HOT MIX ASPHALT (MISCELLANEOUS AREA)	CLASS 3 AGGREGATE SUBBASE	DETECTABLE WARNING SURFACE
			TON	TON	SQYD	CY	SQFT
L-1	Lt & Rt	"A" 31+10.00 TO 33+58.10	89.4	44.7	331	230.6	30
	Lt & Rt	"A" 34+16.78 TO 37+00.00	90.2	45.1	334	260.3	
TOTAL			179.6	89.8	665	490.9	30

SUMMARY OF QUANTITIES

Q-1

STATE OF CALIFORNIA - DEPARTMENT OF TRANSPORTATION
Caltrans® DESIGN BRANCH G
FUNCTIONAL SUPERVISOR: SUSAN YEE
CALCULATED-DESIGNED BY: KIMBERLY NGUYEN
CHECKED BY: FARIBA A. KHOSRAVI
REVISED BY / DATE REVISED

LAST REVISION 09-17-12 | DATE PLOTTED => 15-NOV-2012 | TIME PLOTTED => 11:27

Dist	COUNTY	ROUTE	POST MILES TOTAL PROJECT	SHEET No.	TOTAL SHEETS
12	Ora	5	19.5	21	30

REGISTERED ELECTRICAL ENGINEER 10-03-12 DATE

11-13-12
PLANS APPROVAL DATE

REGISTERED PROFESSIONAL ENGINEER S. SHAHRIARI No. E 13485 Exp. 9/30/14 ELECTRICAL STATE OF CALIFORNIA

THE STATE OF CALIFORNIA OR ITS OFFICERS OR AGENTS SHALL NOT BE RESPONSIBLE FOR THE ACCURACY OR COMPLETENESS OF SCANNED COPIES OF THIS PLAN SHEET.

NOTE:

FOR ACCURATE RIGHT OF WAY DATA, CONTACT RIGHT OF WAY ENGINEERING AT THE DISTRICT OFFICE.

PHASE DIAGRAM

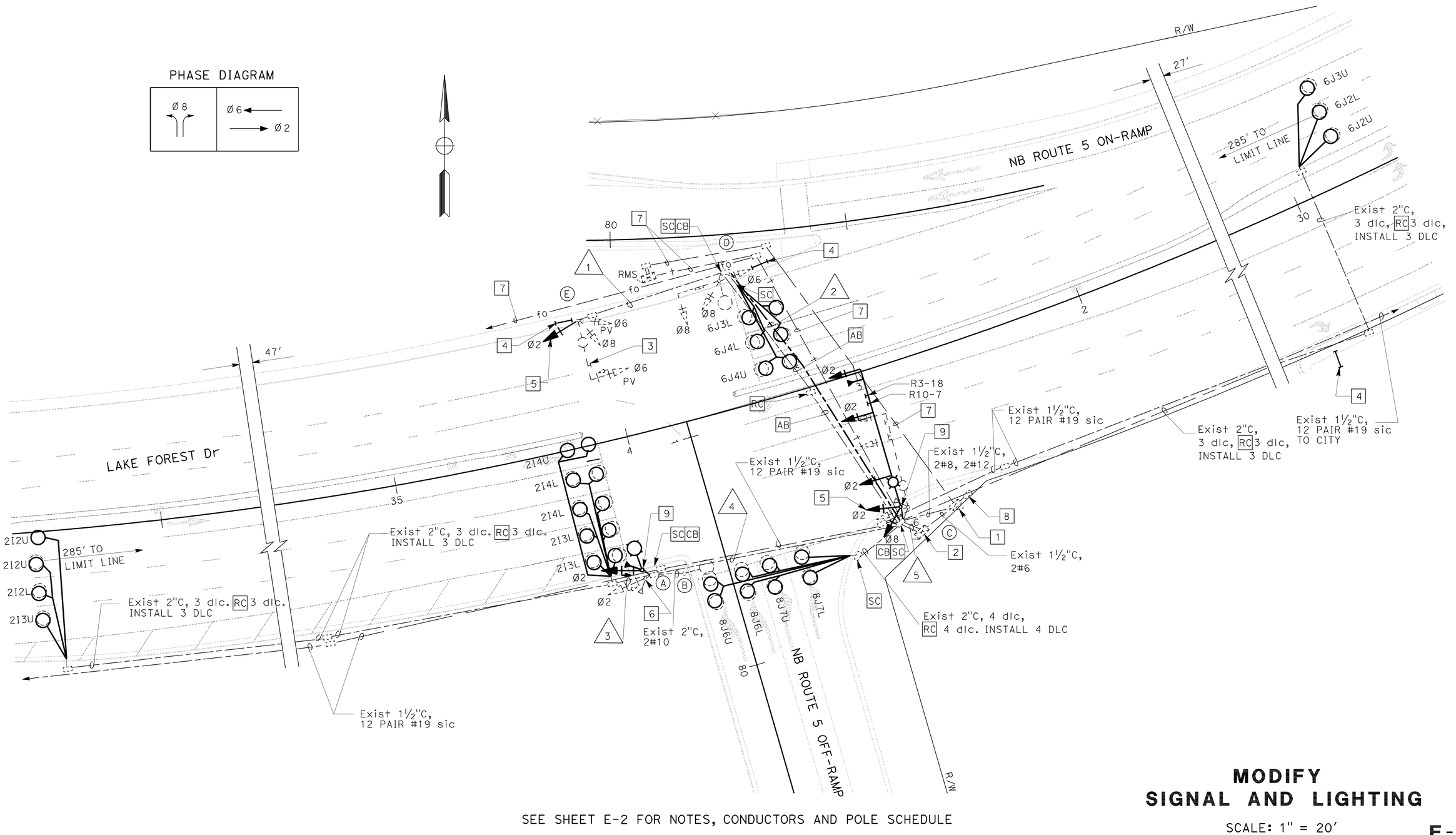

SEE SHEET E-2 FOR NOTES, CONDUCTORS AND POLE SCHEDULE

APPROVED FOR ELECTRICAL WORK ONLY

MODIFY SIGNAL AND LIGHTING

SCALE: 1" = 20'

E-1

STATE OF CALIFORNIA - DEPARTMENT OF TRANSPORTATION
Caltrans® ELECTRICAL DESIN

FUNCTIONAL SUPERVISOR: SHAHRAM SHAHRIARI

CALCULATED-DESIGNED BY: SOUDABEH AFRASIABI
CHECKED BY: SHAHRAM SHAHRIARI

REVISED BY
DATE REVISED

LAST REVISION 10-02-12
DATE PLOTTED => 16-NOV-2012
TIME PLOTTED => 08:23

Dist	COUNTY	ROUTE	POST MILES TOTAL PROJECT	SHEET No.	TOTAL SHEETS
12	Ora	5	19.5	22	30

REGISTERED ELECTRICAL ENGINEER 10-03-12 DATE

11-13-12
PLANS APPROVAL DATE

REGISTERED PROFESSIONAL ENGINEER S. SHAHRIARI No. E 13485 Exp. 9/30/14 ELECTRICAL STATE OF CALIFORNIA

THE STATE OF CALIFORNIA OR ITS OFFICERS OR AGENTS SHALL NOT BE RESPONSIBLE FOR THE ACCURACY OR COMPLETENESS OF SCANNED COPIES OF THIS PLAN SHEET.

NOTES:

1. WHEN PLACING ELECTRICAL POLES BEHIND CURB RETURNS A MINIMUM OF 18" CLEARANCE SHALL BE PROVIDED BEYOND THE FACE OF THE CURBS, AND A MINIMUM OF 36" SHALL BE PROVIDED ALONG THE CURB RETURNS OF INTERSECTIONS AND NEAR THE EDGES OF DRIVEWAYS.

2. AB EXISTING LOOP DETECTORS, WHERE NEW LOOP DETECTORS ARE CUT.

LEGEND:

1 EXISTING 120/240 V DUAL METERED SERVICE IN TYPE III-CF SERVICE EQUIPMENT ENCLOSURE. ID No. 12-55-005-0-020.151.

METER 1: 100 A, 240 V, 2P, CB MAIN
50 A, 120 V, 1P, CB SIGNAL
20 A, 120 V, 1P, CB IISNS

METER 2: 100 A, 240 V, 2P, CB MAIN,
20 A, 120 V, 1P, CB IRRIGATION
30 A, 120 V, 1P, CB SIGNS
40 A, 240 V, 2P, CB LIGHT
30 A, 120 V, 1P, CB RAMP
20 A, 120 V, 1P, CB FLASHING BEACON

2 EXISTING MODEL 170 CONTROLLER, IN MODEL 332 CABINET WITH BATTERY BACKUP SYSTEM.

3 RC EXISTING SIGN R3-4. INSTALL NEW SIGN R3-18.

4 INSTALL TYPE I PEDESTRIAN BARRICADE WITH 2-SIGNS R9-3a AND R-9b BACK TO BACK.

5 INSTALL SIGNAL HEAD AT 17' HEIGHT.

6 RC EXISTING SIGN R9-3a.

7 PROTECT IN PLACE.

8 EXISTING EDISON VAULT #5204340

9 INSTALL SIGN R9-3.

EXISTING POLE AND EWUIPMENT SCHEDULE

No.	STANDARD Type	SMA	LMA	VEH SIG MTG Ø	Mast Arm	Ø	Pole	LED LUMINAIRE	SPECIAL REQUIREMENTS
A	1-A (R)	-	-	-	-	2(R)	TV-1-T (R)	-	EVD RR
	15TS (N)	-	12' (N)	-	-		SV-1-T (N)	165 W (N)	EVD (**)
B	15	-	12'	-	-		-	165 W (*)	-
C	26-3-70 (R)	45' (R)	12' (R)	2 (R)	2-MAS (R)	2(R)	SV-1-T (R)	200 W (R)	EVD RR
	61A-5-100(N)	60' (N)	15' (N)	2 (N)	3-MAS (N)	2(N),8(N)	SV-2-T (N)	235 W (N)	EVD (**)
D	17-2-70	20'	12'	8	MAS	6,8	SV-2-T	165 W (*)	Lake Forest
E	24-3-70	35'	12'	6	MAS	2(N),6,8	SV-2-T SV-1-T(N)	165 W (*)	-

(N) - NEW

(R) - RC

(*) - RC EXISTING HPS. INSTALL NEW LED.

(**) - REINSTALL EVD.

CONDUCTOR AND CONDUIT SCHEDULE

CONDUCTOR DESIGNATION			RUN NUMBER				
			NUMBER OF CONDUCTORS				
CABLE TYPE	Std	PHASE	1	2	3	4	5
VEH-PED 12CSC	A	Ø2				1	1
	B	-					
	C	Ø2,Ø8					2
	D	Ø6,Ø8		2			2
	E	Ø2,Ø6,Ø8	3	3			3
TOTAL CABLES 12 CONDUCTORS			3	5		1	8
#12	IISNS			2			
#8	STREET LIGHTING		2	2		2	
#6	CONTROLLER POWER						
TYPE C DLC	Ø2				6	6	6
	Ø6			3			6
	Ø8						4
TOTAL DLCs PER RUN				3	6	6	16
EVC						1*	2*
SIC							2*
CONDUIT SIZE			2"(E)	4"(N)	2"(E)	3"(E)	2-3"(E)

(N) - NEW

REMOVE ALL EXISTING CONDUCTORS AND INSTALL NEW CONDUCTORS, EXCEPT RR EVC AND sic.

(*) - REINSTALL EVC.

MODIFY SIGNAL AND LIGHTING

APPROVED FOR ELECTRICAL WORK ONLY

E-2

STATE OF CALIFORNIA - DEPARTMENT OF TRANSPORTATION
Caltrans ELECTRICAL DESIN
FUNCTIONAL SUPERVISOR SHAHRAM SHAHRIARI
CALCULATED-DESIGNED BY SOUDABEH AFRASIABI
CHECKED BY SHAHRAM SHAHRIARI
REVISED BY
DATE REVISED

LAST REVISION 10-02-12
DATE PLOTTED => 16-NOV-2012
TIME PLOTTED => 05:56

Dist	COUNTY	ROUTE	POST MILES TOTAL PROJECT	SHEET No.	TOTAL SHEETS
12	Ora	5	19.5	23	30

REGISTERED ELECTRICAL ENGINEER 10-03-12 DATE

11-13-12
PLANS APPROVAL DATE

REGISTERED PROFESSIONAL ENGINEER
S. SHAHRIARI
No. E 13485
Exp. 9/30/14
ELECTRICAL
STATE OF CALIFORNIA

THE STATE OF CALIFORNIA OR ITS OFFICERS OR AGENTS SHALL NOT BE RESPONSIBLE FOR THE ACCURACY OR COMPLETENESS OF SCANNED COPIES OF THIS PLAN SHEET.

NOTE: (THIS SHEET)

FOR ACCURATE RIGHT OF WAY DATA, CONTACT
RIGHT OF WAY ENGINEERING AT THE DISTRICT OFFICE.

LEGEND: (THIS SHEET)

1 EXISTING 120/240 V METERED SERVICE IN TYPE III-BF SERVICE EQUIPMENT ENCLOSURE. ID No. 12-55-005-0-020.155.

100 A, 240 V, 2P, CB MAIN,
30 A, 120 V, 1P, CB FOR SB RAMP,
30 A, 120 V, 1P, CB FOR SB RAMP,
20 A, 120 V, 1P, CB FOR TELEPHONE DEMARCATION,
ADD 20 A, 120 V, 1P, CB FOR FLASHING BEACON,

2 INSTALL TYPE 1-A MINIMUM 2′ AWAY FROM UTILITY, WITH YELLOW FLASHING BEACON AND FLASHING BEACON CONTROL ASSEMBLY.

3 INSTALL TYPE I PEDESTRIAN BARRICADE WITH 2-SIGNS R9-3 BACK TO BACK.

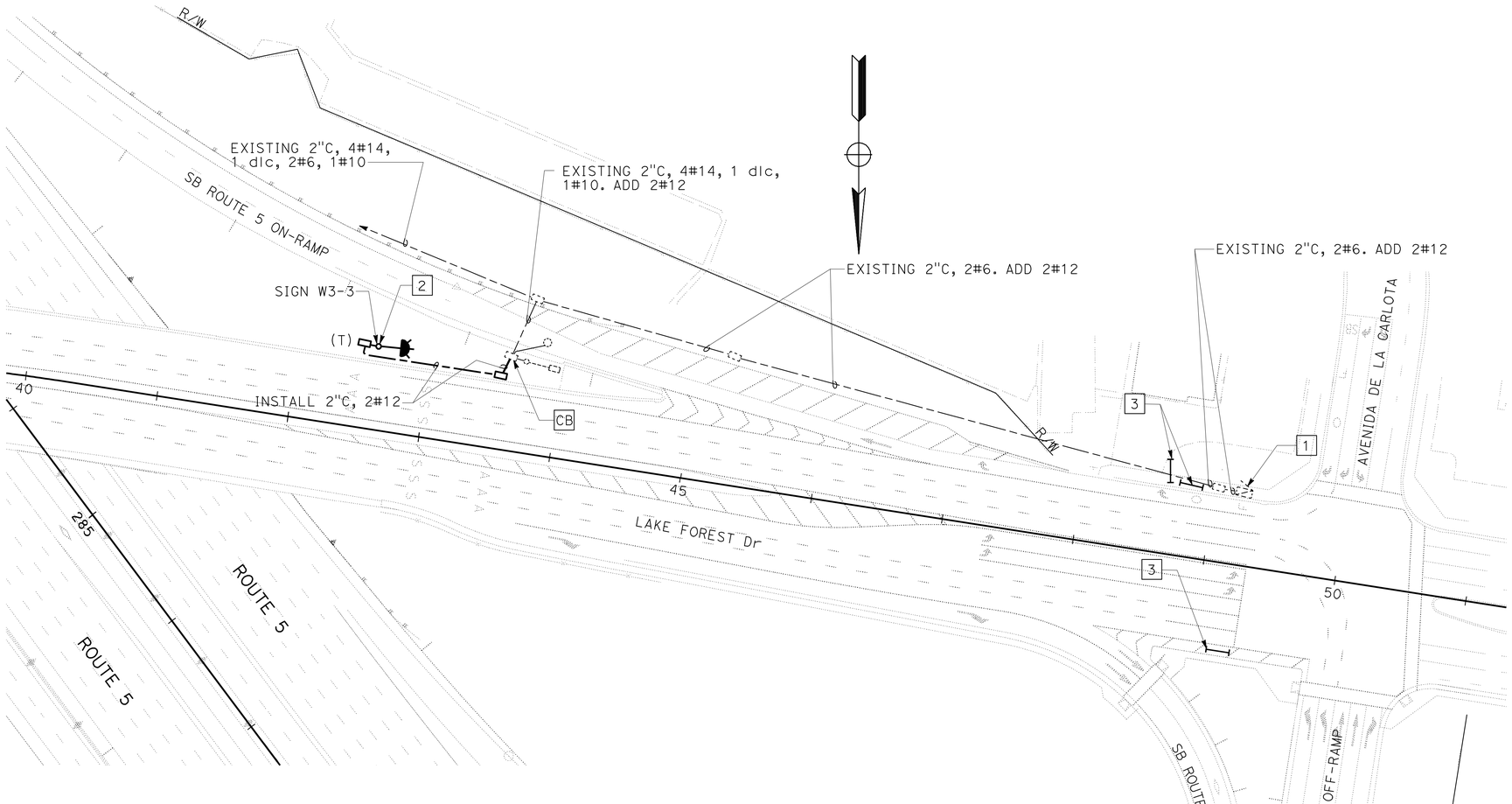

FLASHING BEACON SYSTEM

SCALE: 1" = 50′

E-3

APPROVED FOR ELECTRICAL WORK ONLY

STATE OF CALIFORNIA - DEPARTMENT OF TRANSPORTATION
Caltrans® **ELECTRICAL DESIGN**

FUNCTIONAL SUPERVISOR: SHAHRAM SHAHRIARI
CALCULATED-DESIGNED BY: SOUDABEH AFRASIABI
CHECKED BY: VANESSA TRUONG
REVISED BY
DATE REVISED

LAST REVISION 10-02-12
DATE PLOTTED => 16-NOV-2012
TIME PLOTTED => 05:56

Dist	COUNTY	ROUTE	POST MILES TOTAL PROJECT	SHEET No.	TOTAL SHEETS
12	Ora	5	19.5	24	30

REGISTERED ELECTRICAL ENGINEER 10-03-12 DATE

11-13-12
PLANS APPROVAL DATE

REGISTERED PROFESSIONAL ENGINEER
S. SHAHRIARI
No. E 13485
Exp. 9/30/14
ELECTRICAL
STATE OF CALIFORNIA

THE STATE OF CALIFORNIA OR ITS OFFICERS OR AGENTS SHALL NOT BE RESPONSIBLE FOR THE ACCURACY OR COMPLETENESS OF SCANNED COPIES OF THIS PLAN SHEET.

NOTE:

THE QUANTITIES ON THIS SHEET ARE NOT
A SEPARATE PAY ITEM AND ARE FOR INFORMATION ONLY.

MODIFY SIGNAL AND LIGHTING

SHEET No.	LOOP TYPE E	STANDARD 61A-5-100 (N)	STANDARD 26-3-70 (R)	STANDARD 15TS (N)	STANDARD 1-A (R)	VEH SIG MTG POLE SV-1-T (N)	VEH SIG MTG POLE SV-2-T (N)	TV-1-T (R)	SV-1-T (R)	PED BARRICADE	LED 165 W (N)	LED 235 W (N)	HPS 200 W (R)	12 CSC	CONDUCTOR 2#6	CONDUCTOR 2#8	CONDUCTOR 2#12	DLC	CONDUIT 4"
	EA	EA	EA	EA	EA	EA	EA	EA	EA	EA	EA	EA	EA	FT	FT	FT	FT	FT	FT
E-1	31	1	1	1	1	2	1	1	1	3	4	1	4	1000	10	300	130	2700	125

(N) - NEW
(R) - RC

FLASHING BEACON SYSTEM

SHEET No.	TYPE 1-A FLASHING BEACON	FLASHING BEACON CONTROL ASSEMBLY	PULL BOX	PED BARRICADE	CONDUCTOR 2#12	CONDUIT 2"
	EA	EA	EA	EA	FT	FT
E-3	1	1	2	3	700	130

ELECTRICAL QUANTITIES

APPROVED FOR ELECTRICAL WORK ONLY

E-4

STATE OF CALIFORNIA - DEPARTMENT OF TRANSPORTATION
Caltrans ELECTRICAL DESIGN

FUNCTIONAL SUPERVISOR: SHAHRAM SHAHRIARI
CALCULATED-DESIGNED BY: SOUDABEH AFRASIABI
CHECKED BY: VANESSA TRUONG
REVISED BY
DATE REVISED

LAST REVISION 10-02-12
DATE PLOTTED => 16-NOV-2012
TIME PLOTTED => 05:56

Dist	COUNTY	ROUTE	POST MILES TOTAL PROJECT	SHEET No.	TOTAL SHEETS
12	Ora	5	19.5	25	30

REGISTERED CIVIL ENGINEER

July 20, 2012
PLANS APPROVAL DATE

REGISTERED PROFESSIONAL ENGINEER
Roberta L. McLaughlin
No. C40375
Exp. 3-31-13
CIVIL
STATE OF CALIFORNIA

THE STATE OF CALIFORNIA OR ITS OFFICERS OR AGENTS SHALL NOT BE RESPONSIBLE FOR THE ACCURACY OR COMPLETENESS OF SCANNED COPIES OF THIS PLAN SHEET.

TO ACCOMPANY PLANS DATED 11-13-12

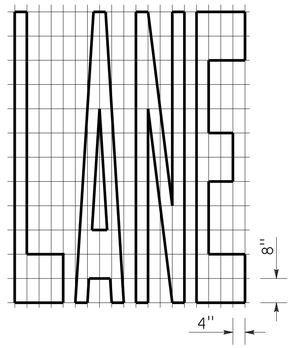

A=24 ft²

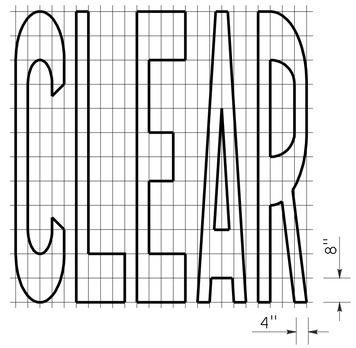

A=27 ft²

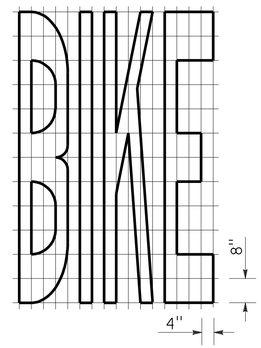

A=21 ft²

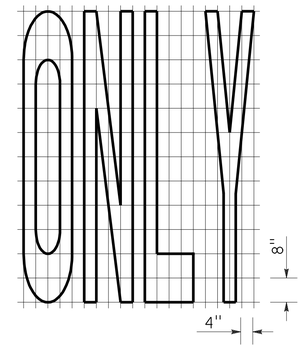

A=22 ft²

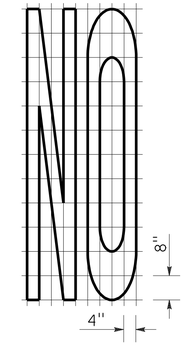

A=14 ft²

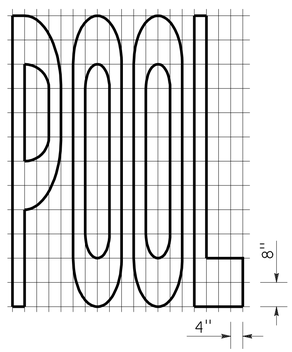

A=23 ft²

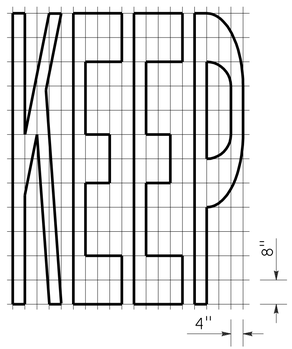

A=24 ft²

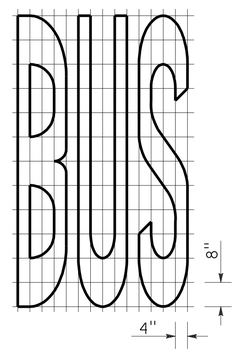

A=20 ft²

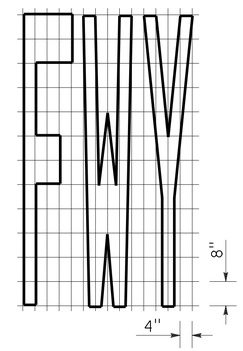

A=16 ft²

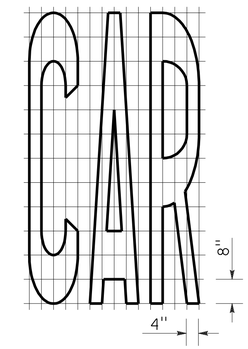

A=17 ft²

WORD MARKINGS			
ITEM	ft²	ITEM	ft²
LANE	24	NO	14
POOL	23	BIKE	21
CAR	17	BUS	20
CLEAR	27	ONLY	22
KEEP	24	FWY	16

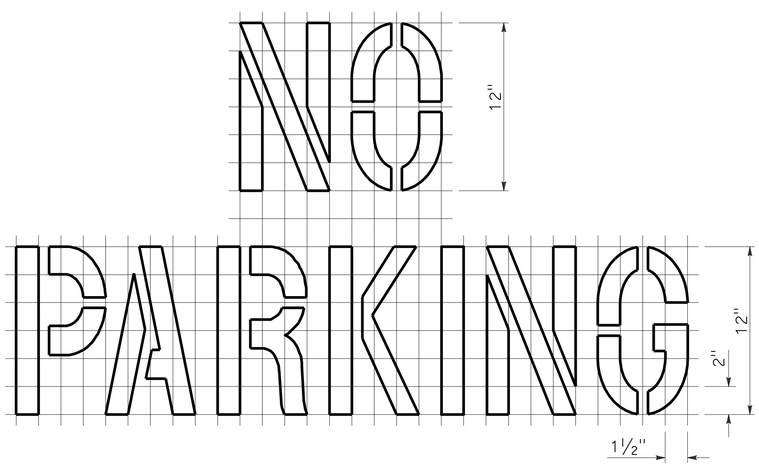

A=2 ft²
See Notes 6 and 7

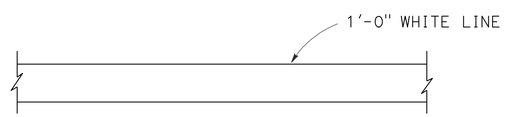

LIMIT LINE (STOP LINE)

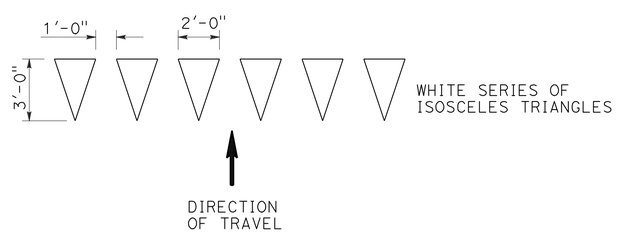

YIELD LINE

NOTES:

1. If a message consists of more than one word, it should read "UP", i.e., the first word should be nearest the driver.
2. The space between words should be at least four times the height of the characters for low speed roads, but not more than ten times the height of the characters. The space may be reduced appropriately where there is limited space because of local conditions.
3. Minor variations in dimensions may be accepted by the Engineer.
4. Portions of a letter, number or symbol may be separated by connecting segments not to exceed 2" in width.
5. The words "NO PARKING" pavement marking is to be used for parking facilities. For typical locations of markings, see Standard Plans A90A and A90B.
6. The words "NO PARKING", shall be painted in white letters no less than 1'-0" high on a contrasting background and located so that it is visible to traffic enforcement officials.

STATE OF CALIFORNIA
DEPARTMENT OF TRANSPORTATION

PAVEMENT MARKINGS WORDS, LIMIT AND YIELD LINES

NO SCALE

RSP A24E DATED JULY 20, 2012 SUPERSEDES STANDARD PLAN A24E
DATED MAY 20, 2011 - PAGE 17 OF THE STANDARD PLANS BOOK DATED 2010.

REVISED STANDARD PLAN RSP A24E

2010 REVISED STANDARD PLAN RSP A24E

6-12-12

Dist	COUNTY	ROUTE	POST MILES TOTAL PROJECT	SHEET No.	TOTAL SHEETS
12	Ora	5	19.5	26	30

REGISTERED CIVIL ENGINEER

July 20, 2012
PLANS APPROVAL DATE

REGISTERED PROFESSIONAL ENGINEER
Roberta L. McLaughlin
No. C40375
Exp. 3-31-13
CIVIL
STATE OF CALIFORNIA

THE STATE OF CALIFORNIA OR ITS OFFICERS OR AGENTS SHALL NOT BE RESPONSIBLE FOR THE ACCURACY OR COMPLETENESS OF SCANNED COPIES OF THIS PLAN SHEET.

TO ACCOMPANY PLANS DATED 11-13-12

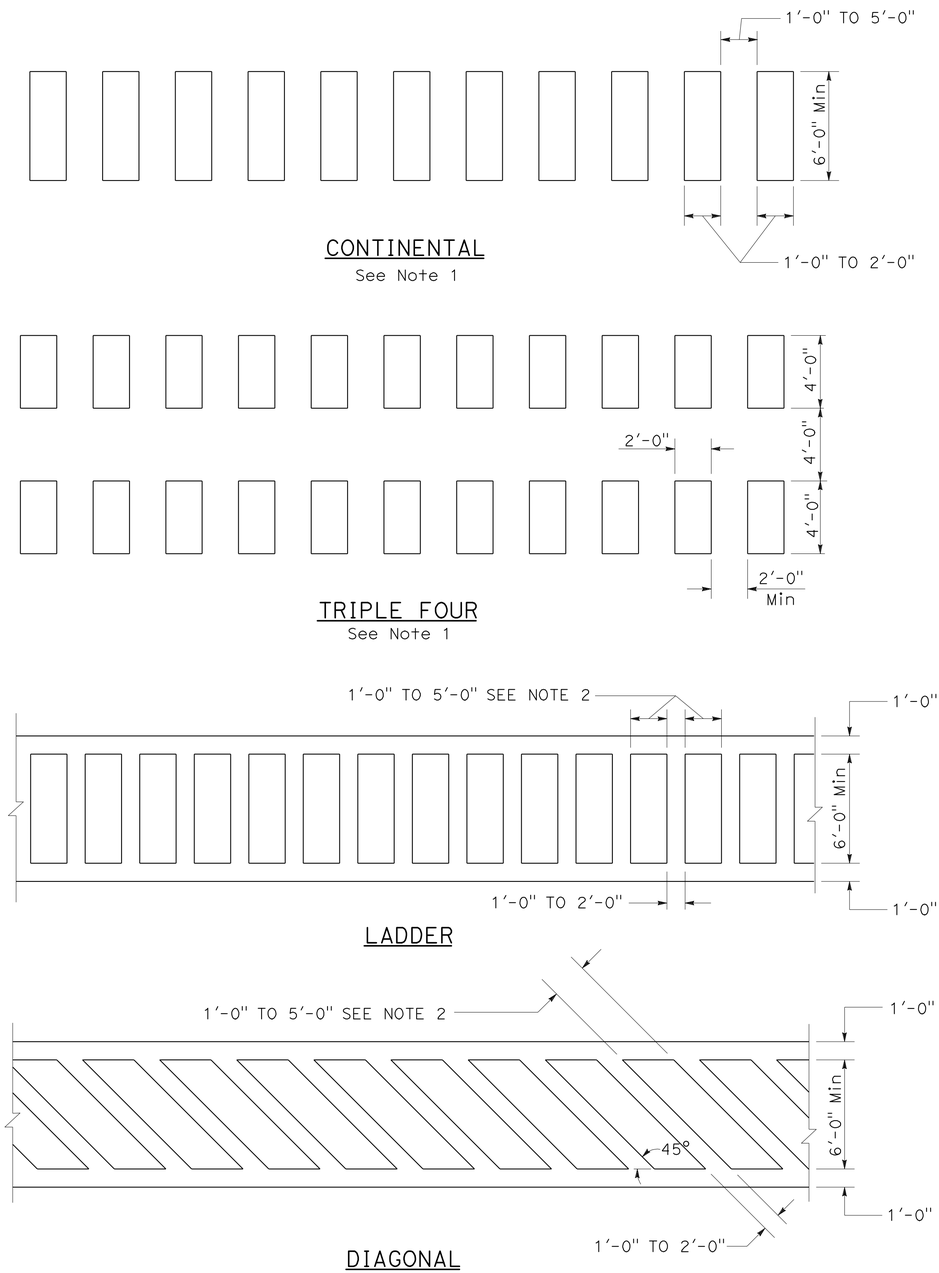

HIGHER VISIBILITY CROSSWALKS

NOTES:

1. Spaces between markings should be placed in wheel tracks of each lane.
2. Spacings not to exceed 2.5 times width of longitudinal line.
3. All crosswalk markings must be white except for those near schools must be yellow.

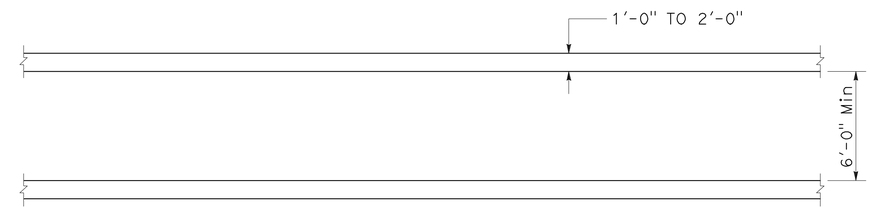

BASIC

STATE OF CALIFORNIA
DEPARTMENT OF TRANSPORTATION

PAVEMENT MARKINGS CROSSWALKS

NO SCALE

RSP A24F DATED JULY 20, 2012 SUPPLEMENTS THE STANDARD PLANS BOOK DATED 2010.

REVISED STANDARD PLAN RSP A24F

2010 REVISED STANDARD PLAN RSP A24F

6-28-12

Dist	COUNTY	ROUTE	POST MILES TOTAL PROJECT	SHEET No.	TOTAL SHEETS
12	Ora	5	19.5	27	30

REGISTERED CIVIL ENGINEER

July 20, 2012
PLANS APPROVAL DATE

Raymond Don Tsztoo No. C37332 Exp. 6-30-14 CIVIL — REGISTERED PROFESSIONAL ENGINEER — STATE OF CALIFORNIA

THE STATE OF CALIFORNIA OR ITS OFFICERS OR AGENTS SHALL NOT BE RESPONSIBLE FOR THE ACCURACY OR COMPLETENESS OF SCANNED COPIES OF THIS PLAN SHEET.

TO ACCOMPANY PLANS DATED 11-13-12

2010 REVISED STANDARD PLAN RSP D77B

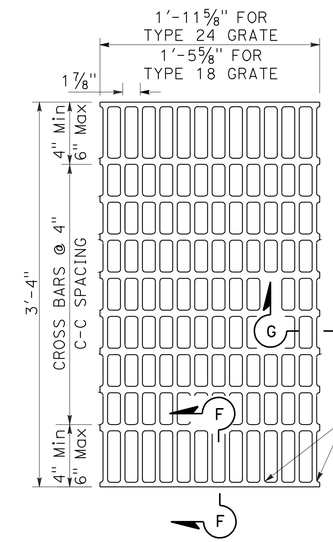

NOTES:

Bearing bars to be 3½" × ¼" bars on 1⅞" centers.

⅜"± ø Cross bars may be fillet welded, resistance welded or electroforged to bearing bars.

Weight of Type 24 grate = 141 LBS.

Weight of Type 18 grate = 107 LBS. (Type 24 grate shown).

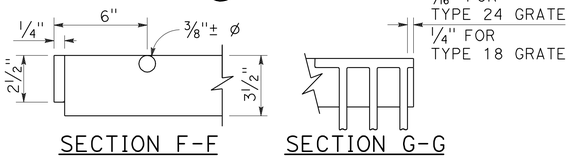

SECTION F-F SECTION G-G

TYPE 18-10 AND 24-13 GRATE

(Welded Steel)

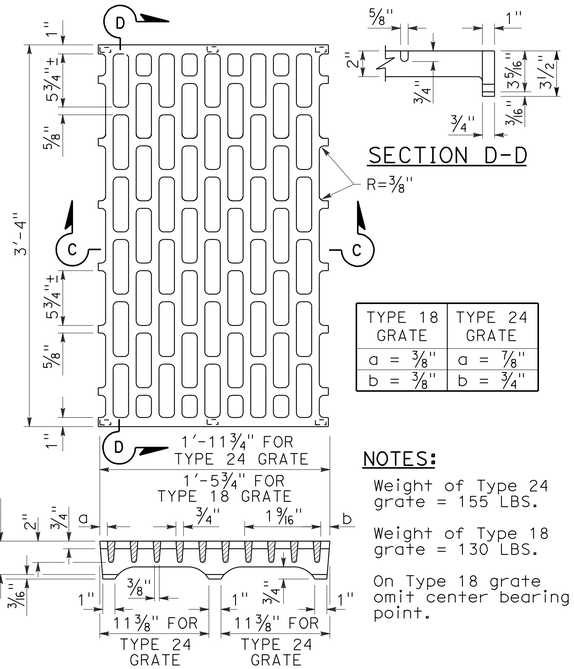

SECTION C-C SECTION D-D

TYPE 18 GRATE	TYPE 24 GRATE
a = ⅜"	a = ⅞"
b = ⅜"	b = ¾"

NOTES:

Weight of Type 24 grate = 155 LBS.

Weight of Type 18 grate = 130 LBS.

On Type 18 grate omit center bearing point.

TYPE 18-8C AND 24-10C GRATE

(Cast ductile iron)

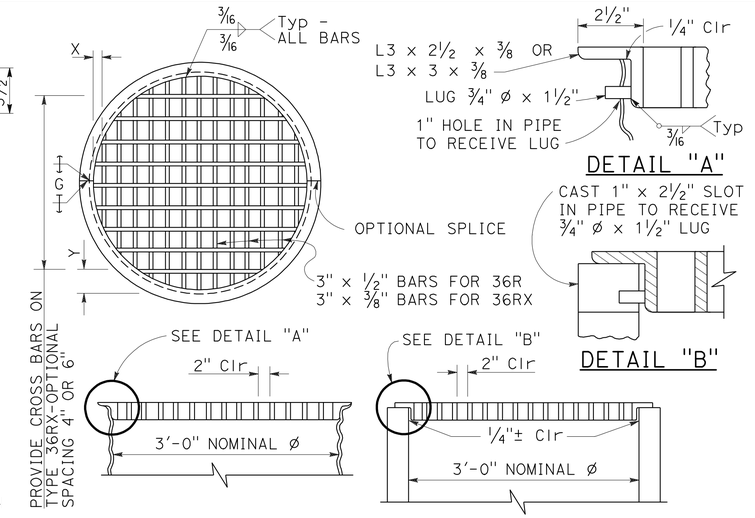

TYPE 36R AND 36RX GRATE DETAILS

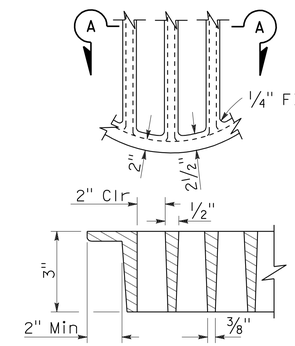

SECTION A-A

ALTERNATIVE CAST DUCTILE IRON GRATE OR CAST CARBON STEEL GRATE TYPE 36R AND 36RX

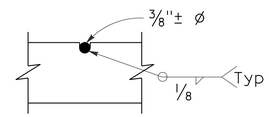

⅜"± ø Cross bars may be fillet welded, resistance welded or electroforged to bearing bars.

CROSS BAR DETAIL TYPE 36RX GRATE (WELDED STEEL)

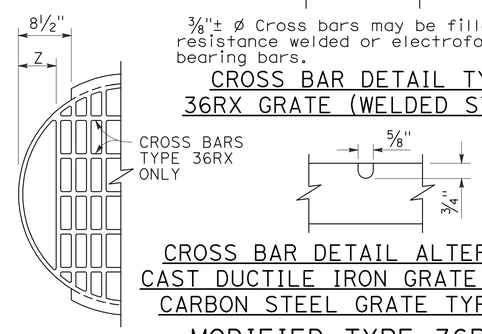

CROSS BAR DETAIL ALTERNATIVE CAST DUCTILE IRON GRATE OR CAST CARBON STEEL GRATE TYPE 36RX

MODIFIED TYPE 36R AND 36RX GRATE FOR ODI INLET

BASIS FOR Misc IRON AND STEEL FINAL PAY WEIGHTS FOR DRAINAGE INLETS

INLET TYPE	GRATE TYPE	No. OF GRATES	WEIGHT LB
GDO (SEE NOTE 4)	24-10C	2	391
	24-10S	2	456
	24-12X	2	473
	24-13	2	374
GO,GOL,G1,G2, G3,G4 (TYPE 24)	24-10C	1	202
	24-10S	1	229
	24-12X	1	239
	24-13	1	188
G4 (TYPE 18) G5,G6	18-8S	1	187
	18-9X	1	187
	18-10	1	149
GT1,GT2	18-8S	2	374
	18-9X	2	374
	18-10	2	298
GT3,GT4	24-10C	2	404
	24-10S	2	458
	24-12X	2	478
	24-13	2	376
ODI	36RX (Mod)	1	196
GMP,GCP,GCPI	36RX	1	215
ODI	36R (Mod)	1	220
GMP,GCP,GCPI	36R	1	236
TRASH RACK			22
GRATE CHAIN			3

NOTES:

1. When alternative grates are allowed - Final pay based on alternative with the lesser weight.
2. Use frame shown on Standard Plan D74A, D74B or RSP D77A as appropriate.
3. When Type 24-10S, 24-12X or 24-13 grates are used with GDO Inlets, a ¼" × 3½" × 3'-4⅞" steel bar shall be welded across the center of inlet frame to separate the individual grates.
4. See Revised Standard Plan RSP D77A for connecting chain to welded grate and frame. When chain is required, do not use cast ductile iron grate.

GRATE BAR SPACING TABLE

TYPE	No. OF BARS	CLEAR BAR SPACING	X	Y 4" SPACING	Y 6" SPACING	Z
36R	13	2"	2⅛"	-	-	-
36RX (STEEL)	15	2"	9/16"	3¾"	5¾"	-
36RX (CAST)	13	2"	2⅛"	3¾"	5¾"	-
36R Mod	12	2"	2⅛"	-	-	5"
36RX Mod (STEEL)	13	2"	9/16"	3¾"	5¾"	5 11/16"
36RX Mod (CAST)	12	2"	2⅛"	3¾"	5¾"	5"

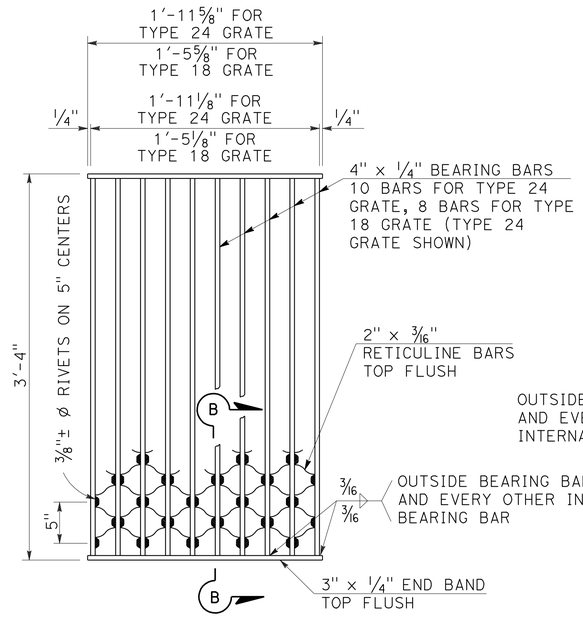

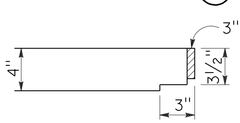

SECTION B-B

NOTES:

Weight of Type 24 grate = 182 LBS.
Weight of Type 18 grate = 145 LBS.

TYPE 18-8S AND 24-10S GRATE

(Welded Steel) Reticuline type

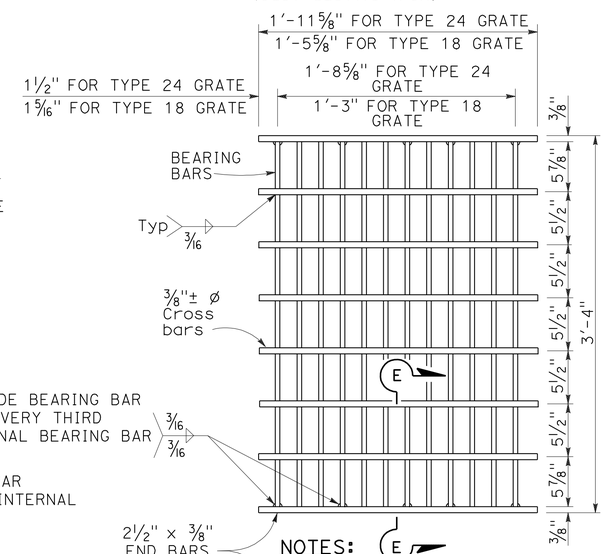

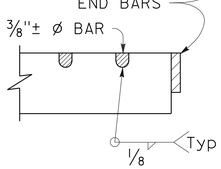

SECTION E-E

NOTES:

Bearing bars to be 3½" × ⅜" bars on 1⅞" centers.

12 Bars for Type 24 grate - 9 bars for Type 18 grates. (Type 24 grate shown).

Weight of Type 24 grate = 192 LBS.

Weight of Type 18 grate = 145 LBS.

⅜"± ø Cross bars may be fillet welded, resistance welded or electroforged to bearing bars.

TYPE 18-9X AND 24-12X GRATE

(Welded Steel)

STATE OF CALIFORNIA
DEPARTMENT OF TRANSPORTATION

BICYCLE TRAVERSABLE GRATE DETAILS

NO SCALE

RSP D77B DATED JULY 20, 2012 SUPERSEDES STANDARD PLAN D77B DATED MAY 20, 2011 - PAGE 165 OF THE STANDARD PLANS BOOK DATED 2010.

REVISED STANDARD PLAN RSP D77B

4-17-12

DIST	COUNTY	ROUTE	POST MILES TOTAL PROJECT	SHEET NO.	TOTAL SHEETS
12	Ora	5	19.5	28	30

REGISTERED ELECTRICAL ENGINEER

January 20, 2012
PLANS APPROVAL DATE

REGISTERED PROFESSIONAL ENGINEER
Jeffery G. McRae
No. E14512
Exp. 6-30-12
ELECTRICAL
STATE OF CALIFORNIA

THE STATE OF CALIFORNIA OR ITS OFFICERS OR AGENTS SHALL NOT BE RESPONSIBLE FOR THE ACCURACY OR COMPLETENESS OF SCANNED COPIES OF THIS PLAN SHEET.

TO ACCOMPANY PLANS DATED 11-13-12

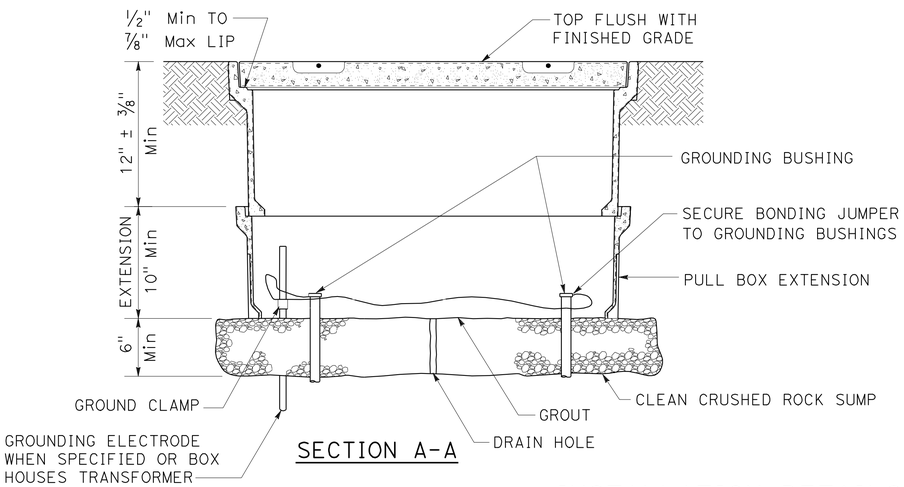

SECTION A-A

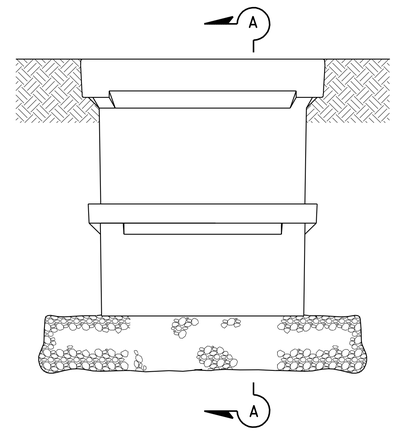

SIDE VIEW

INSTALLATION DETAILS

DETAIL A

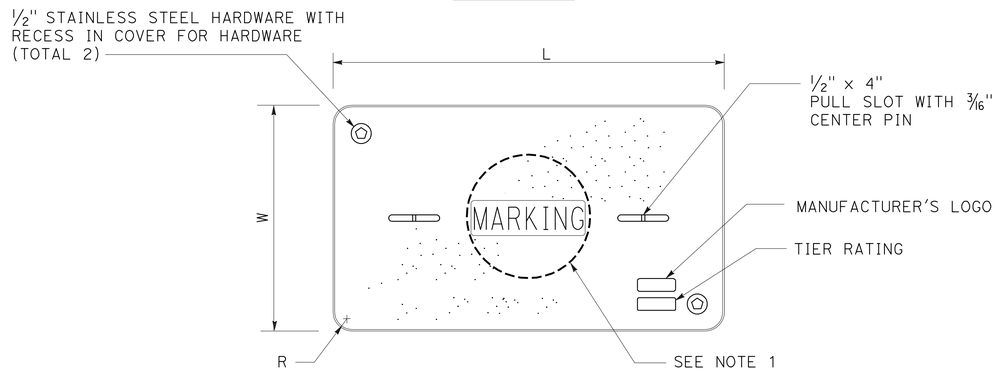

COVER TOP VIEW

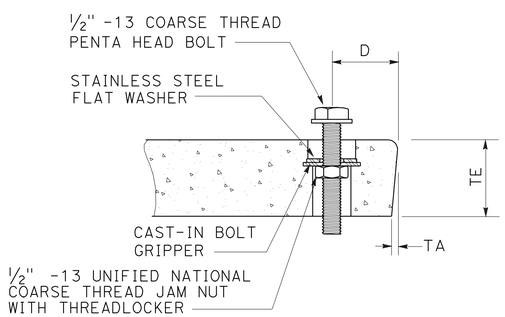

TYPICAL COVER CAPTIVE BOLT

OR SIMILAR

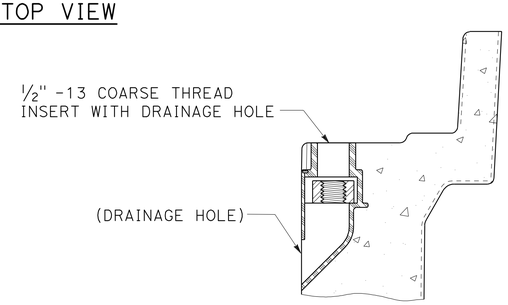

TYPICAL THREADED INSERT

OR SIMILAR

DIMENSION TABLE										
PULL BOX	PULL BOX			COVER						
	MINIMUM DEPTH BOX	MINIMUM DEPTH EXTENSION	MAXIMUM WEIGHT	L	W	R	TE	TA	D	MAXIMUM WEIGHT
No. 3 1/2	12"	N/A	40 lb	1' - 3 3/8"	10 1/8"	1 3/8"	2"	1/8"	1 3/4"	30 lb
No. 5	12"	10"	55 lb	1' - 11 1/4"	1' - 1 3/4"	1 3/8"	2"	1/8"	1 3/4"	60 lb
No. 6	12"	10"	70 lb	2' - 6 1/2"	1' - 5 1/2"	1 3/8"	2"	1/8"	2"	85 lb

NOTES ON PULL BOXES:

1. Pull box covers must be marked as follows: "SERVICE" Service circuits between service point and service disconnect; "SPRINKLER-CONTROL" sprinkler control circuits, 50 V or less; "CALTRANS" on all pull boxes, except pull boxes marked "SPRINKLER-CONTROL"; and "TELEPHONE" Telephone service;

   A) No. 3 1/2 pull box.
      1) "SIGNAL" - Traffic signal circuits with or without street or sign lighting circuits.
      2) "ST LIGHTING" - Street or sign lighting circuits where voltage is under 600 V.

   B) No. 5, 6, 9 or 9A pull box.
      1) "TRAFFIC SIGNAL" - Traffic signal circuits with or without street or sign lighting circuits.
      2) "STREET LIGHTING" - Street or sign lighting circuits where voltage is under 600 V.
      3) "STREET LIGHTING-HIGH VOLTAGE" - Street or sign lighting circuits where voltage is above 600 V.
      4) "IRRIGATION" - Circuits to irrigation controller 120 V or more.
      5) "RAMP METER" - Ramp meter circuits.
      6) "COUNT STATION" - Count or speed monitor circuits.
      7) "COMMUNICATIONS" - Communication circuits.
      8) "TOS COMMUNICATIONS" - TOS communication line.
      9) "TOS POWER" - TOS power.
      10) "TDC POWER" - Telephone demarcation cabinet power.
      11) "CCTV" - Closed circuit television circuits.
      12) "TMS" - Traffic monitoring station circuits.
      13) "CMS" - Changeable message sign circuits.
      14) "HAR" - Highway advisory radio circuits.

2. The nominal dimensions of the opening in which the cover sets must be the same as the cover dimensions (L and W) plus 1/8" or greater.

3. Covers and boxes must be interchangeable with California Standard. When interchanged with a standard, the top surfaces must be flush within 1/8". Top outside radius of covers and pull boxes must have a 1/8" radius.

4. Pull box extension may be another pull box as long as the bottom edge of the pull box can fit into the cover opening.

STATE OF CALIFORNIA
DEPARTMENT OF TRANSPORTATION

ELECTRICAL SYSTEMS (PULL BOX)

NO SCALE

RSP ES-8A DATED JANUARY 20, 2012 SUPPLEMENTS THE STANDARD PLANS BOOK DATED 2010.

REVISED STANDARD PLAN RSP ES-8A

2010 REVISED STANDARD PLAN RSP ES-8A

01-09-12

Dist	COUNTY	ROUTE	POST MILES TOTAL PROJECT	SHEET No.	TOTAL SHEETS
12	Ora	5	19.5	29	30

REGISTERED ELECTRICAL ENGINEER

July 20, 2012
PLANS APPROVAL DATE

REGISTERED PROFESSIONAL ENGINEER
Jeffery G. McRae
No. E14512
Exp. 6-30-14
ELECTRICAL
STATE OF CALIFORNIA

THE STATE OF CALIFORNIA OR ITS OFFICERS OR AGENTS SHALL NOT BE RESPONSIBLE FOR THE ACCURACY OR COMPLETENESS OF SCANNED COPIES OF THIS PLAN SHEET.

TO ACCOMPANY PLANS DATED 11-13-12

2010 REVISED STANDARD PLAN RSP ES-10A

ISOFOOTCANDLE CURVE - MINIMUM

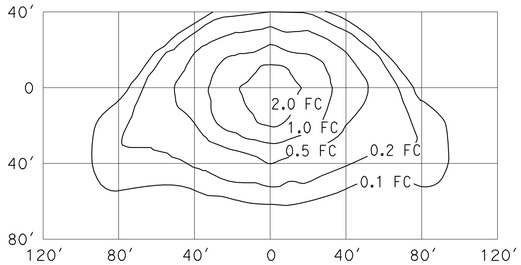

TYPE III MEDIUM CUTOFF

Cutoff Luminaire
34′ Mounting Height
Lamp operated at 22,000 lm
200-W high pressure sodium lamp
ANSI Designation S66

ISOFOOTCANDLE CURVE - MINIMUM

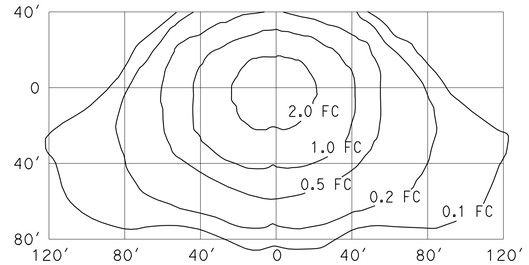

TYPE III MEDIUM CUTOFF

Cutoff Luminaire
40′ Mounting Height
Lamp operated at 37,000 lm
310-W high pressure sodium lamp
ANSI Designation S67

ISOFOOTCANDLE CURVE - MINIMUM

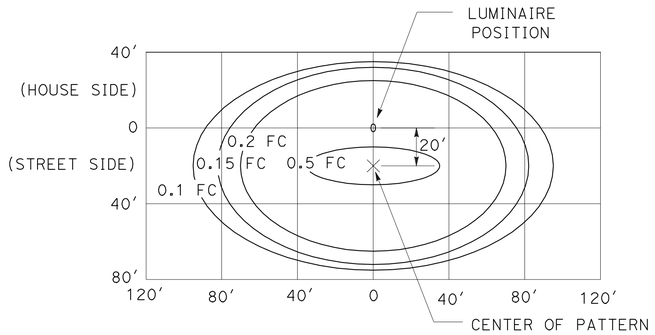

LED LUMINAIRE ROADWAY 1

200-W HPS Equivalent at 34′ Mounting Height

ISOFOOTCANDLE CURVE - MINIMUM

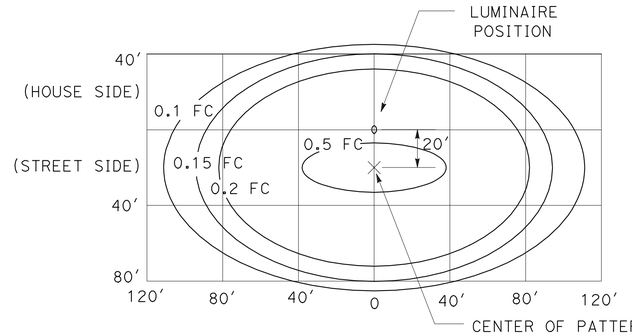

LED LUMINAIRE ROADWAY 2

310-W HPS Equivalent at 40′ Mounting Height

ISOFOOTCANDLE CURVE - MINIMUM

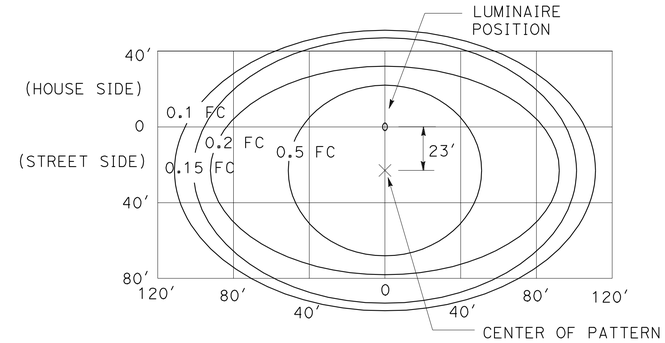

LED LUMINAIRE ROADWAY 4

400-W HPS Equivalent at 40′ Mounting Height

ISOFOOTCANDLE CURVE - MINIMUM

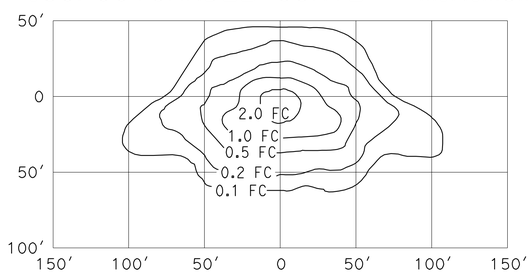

TYPE III MEDIUM CUTOFF

Cutoff Luminaire
30′ Mounting Height
Lamp operated at 16,000 lm
150-W high pressure sodium lamp
ANSI Designation S55

ISOFOOTCANDLE CURVE - MINIMUM

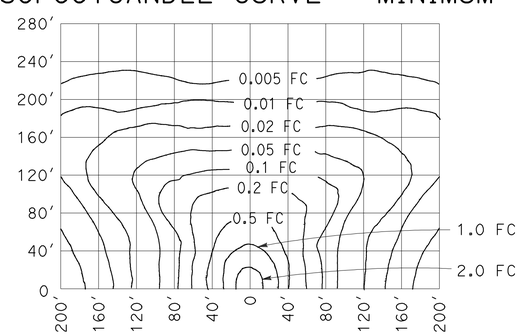

LOW PRESSURE SODIUM LUMINAIRE

40′ Mounting Height
Lamp operated at 33,000 lm
180-W low pressure sodium lamp

STATE OF CALIFORNIA
DEPARTMENT OF TRANSPORTATION

ELECTRICAL SYSTEMS (ISOFOOTCANDLE DIAGRAMS)

NO SCALE

RSP ES-10A DATED JULY 20, 2012 SUPPLEMENTS THE STANDARD PLANS BOOK DATED 2010.

REVISED STANDARD PLAN RSP ES-10A

Dist	COUNTY	ROUTE	POST MILES TOTAL PROJECT	SHEET No.	TOTAL SHEETS
12	Ora	5	19.5	30	30

REGISTERED ELECTRICAL ENGINEER

July 20, 2012
PLANS APPROVAL DATE

REGISTERED PROFESSIONAL ENGINEER
Jeffery G. McRae
No. E14512
Exp. 6-30-14
ELECTRICAL
STATE OF CALIFORNIA

THE STATE OF CALIFORNIA OR ITS OFFICERS OR AGENTS SHALL NOT BE RESPONSIBLE FOR THE ACCURACY OR COMPLETENESS OF SCANNED COPIES OF THIS PLAN SHEET.

TO ACCOMPANY PLANS DATED 11-13-12

ISOFOOTCANDLE CURVE - MINIMUM

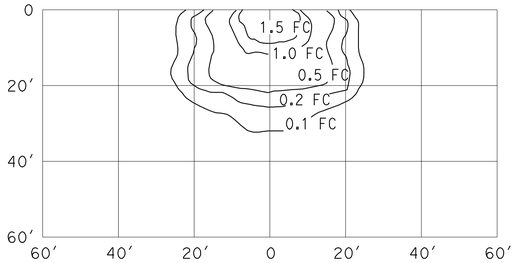

WALL LUMINAIRE
15′ Mounting Height
Lamp operated at 5,800 lm
70-W high pressure sodium lamp
ANSI Designation S62

ISOFOOTCANDLE CURVE - MINIMUM

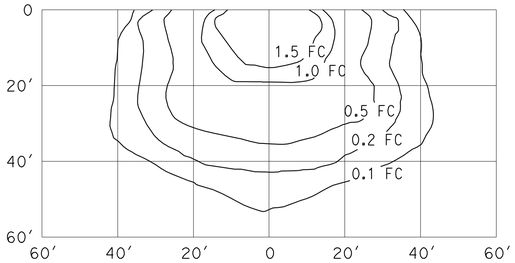

WALL LUMINAIRE
15′ Mounting Height
Lamp operated at 9,500 lm
100-W high pressure sodium lamp
ANSI Designation S54

ISOFOOTCANDLE CURVE - MINIMUM

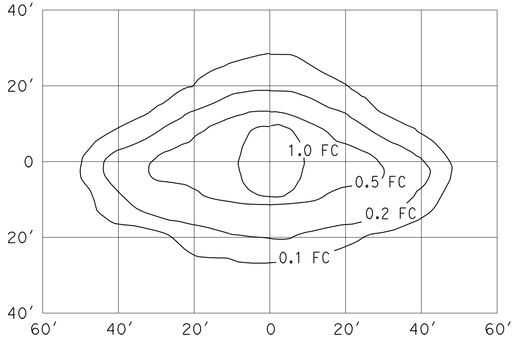

PENDANT SOFFIT LUMINAIRE
TYPE III SHORT
17′ Mounting Height
Lamp operated at 5,800 lm
70-W high pressure sodium lamp
ANSI Designation S62

ISOFOOTCANDLE CURVE - MINIMUM

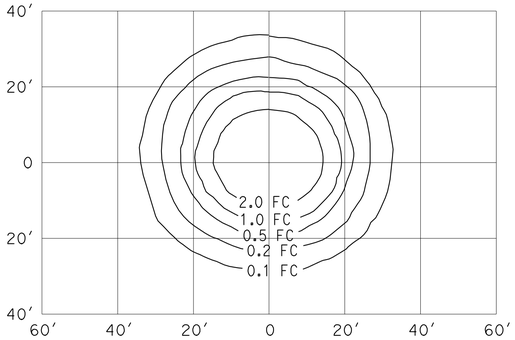

PENDANT SOFFIT LUMINAIRE
17′ Mounting Height
Lamp operated at 5,800 lm
70-W high pressure sodium lamp
ANSI Designation S62

ISOFOOTCANDLE CURVE - MINIMUM

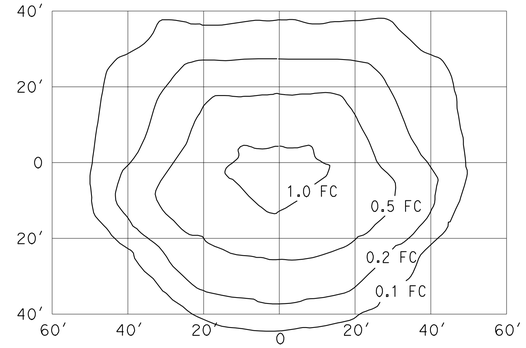

FLUSH SOFFIT LUMINAIRE
17′ Mounting Height
Lamp operated at 5,800 lm
70-W high pressure sodium lamp
ANSI Designation S62

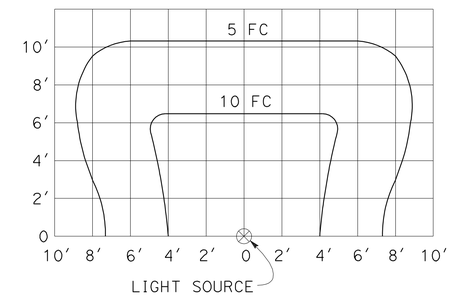

SIGN LIGHTING FIXTURE
ISOFOOTCANDLE DIAGRAM

NOTES:

1. Curves represent the minimum footcandle (FC) of initial illumination on a 10′-0" x 20′-0" panel.
2. The FC shown are with the fixture attached to the light fixture mounting channel which places the center of the source 4′-8" in front of panel and 1′-0" below the bottom edge.
3. Applicable lamp: 85-W fluorescent phosphor coated induction lamp.

STATE OF CALIFORNIA
DEPARTMENT OF TRANSPORTATION

ELECTRICAL SYSTEMS (ISOFOOTCANDLE DIAGRAMS)

NO SCALE

RSP ES-10B DATED JULY 20, 2012 SUPPLEMENTS THE STANDARD PLANS BOOK DATED 2010.

REVISED STANDARD PLAN RSP ES-10B

2010 REVISED STANDARD PLAN RSP ES-10B

2-14-12