Dist	COUNTY	ROUTE	POST MILES TOTAL PROJECT	SHEET No.	TOTAL SHEETS
12	Ora	405	2.6 / 6.5	2	431

Fred Faizi 06-21-16
REGISTERED CIVIL ENGINEER DATE

06-27-16
PLANS APPROVAL DATE

REGISTERED PROFESSIONAL ENGINEER F. FAIZI No. C47267 Exp. 12/31/17 CIVIL STATE OF CALIFORNIA

THE STATE OF CALIFORNIA OR ITS OFFICERS OR AGENTS SHALL NOT BE RESPONSIBLE FOR THE ACCURACY OR COMPLETENESS OF SCANNED COPIES OF THIS PLAN SHEET.

NOTES:

1. DIMENSIONS OF THE PAVEMENT STRUCTURES (STRUCTURAL SECTIONS) ARE SUBJECT TO TOLERANCES SPECIFIED IN THE STANDARD SPECIFICATIONS.
2. SUPERELEVATIONS AS SHOWN ON SUPERELEVATION DIAGRAMS OR AS DIRECTED BY THE ENGINEER.
3. FOR MGS, HMA DIKE, AND CONCRETE BARRIER TYPE AND LOCATION SEE LAYOUT PLANS.
4. FOR RETAINING WALL LOCATION, SEE LAYOUT PLANS AND STRUCTURE PLANS

ABBREVIATIONS:

MGS	MIDWEST GUARDRAIL SYSTEM
RHMA-G	RUBBERIZED HOT MIX ASPHALT (GAP GRADED)

PAVEMENT STRUCTURAL SECTIONS:

1
- 0.85′ CRCP
- 0.25′ HMA (TYPE A)
- 0.70′ CLASS 2 AS

2
- 0.20′ RHMA-G
- 0.25′ HMA (TYPE A)
- 1.00′ CLASS 2 AB
- 0.65′ CLASS 2 AS

3
- 0.20′ RHMA-G
- GEOSYNTHETIC PAVEMENT-INTERLAYER (PAVING FABRIC)
- 1.20′ HMA (TYPE A)
- 0.50′ CLASS 2 AB
- 2.10′ CLASS 2 AS

4
- 0.80′ CRCP
- 0.25′ HMA (TYPE A)
- 0.60′ CLASS 2 AS

5
- 0.25′ HMA (Misc AREA)

6
- 0.20′ RHMA-G
- GEOSYNTHETIC PAVEMENT-INTERLAYER (PAVING FABRIC)
- 1.20′ HMA (TYPE A)
- 0.50′ CLASS 2 AB
- 0.50′ CLASS 2 AS

7
- 0.83′ CLASS 2 AB

EXIST STRUCTURAL SECTIONS:

8
- 0.75′ PCC
- 0.40′ LCB
- 0.42′ Class 3 AB
- 0.42′ Class 4 AB

9
- 0.55′ AC
- 0.80′ LCB
- 0.57′ Class 3 AB
- 0.57′ Class 4 AB

10
- 0.20′ RHMA
- 0.20′ HMA
- 1.65′ AB/AS

2

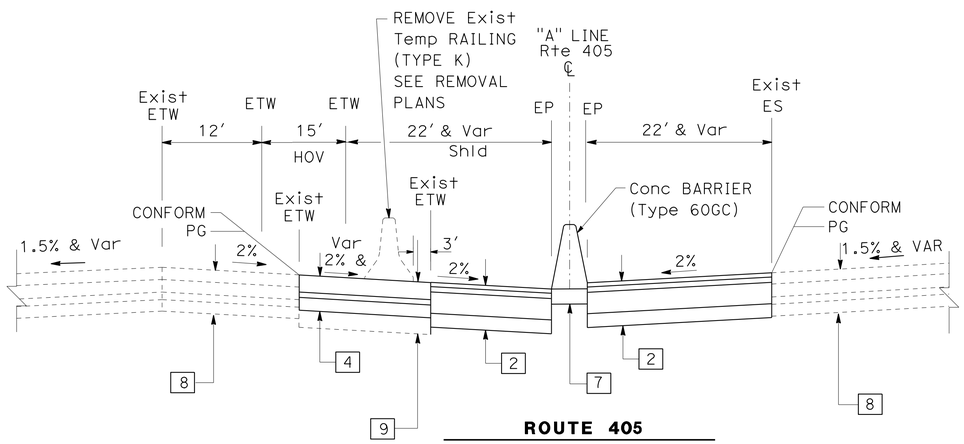

ROUTE 405
"A" 246+00 TO "A" 291+82.44

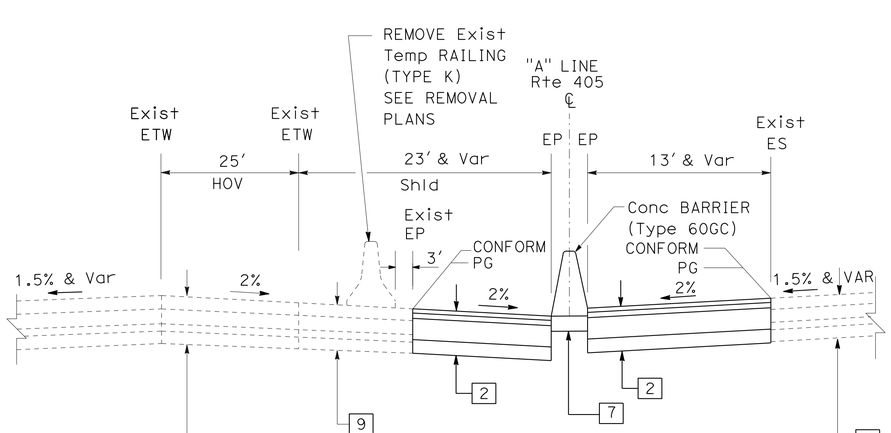

ROUTE 405
"A" 176+53 TO "A" 246+00
"A" 291+82.44 TO "A" 301+85

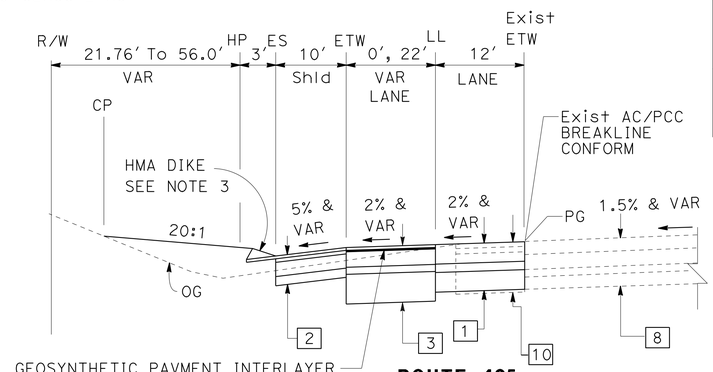

ROUTE 405
"A" 316+92 TO "A" 322+92

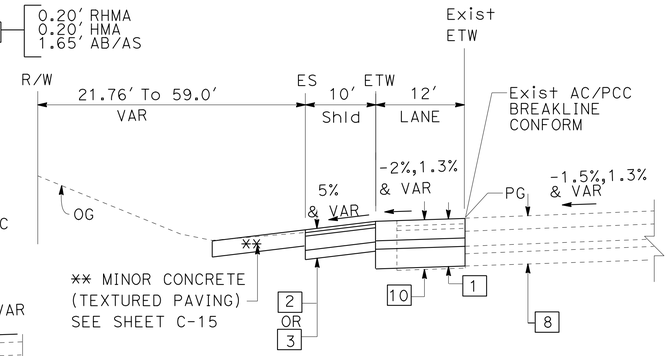

ROUTE 405
"A" 329+62.84 TO "A" 332+92
"A" 338+66.24 TO "A" 340+07.74
"A" 345+69.45 TO "A" 347+77.22

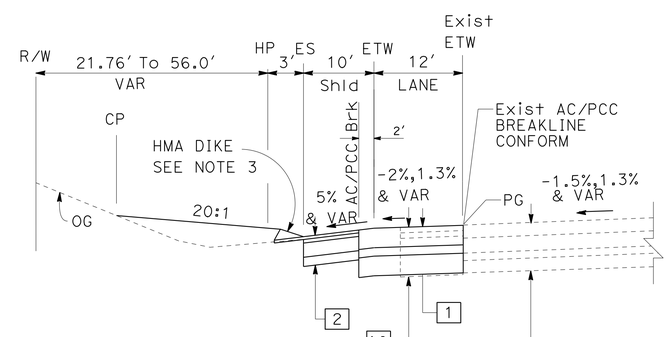

ROUTE 405
"A" 278+00 TO "A" 316+92

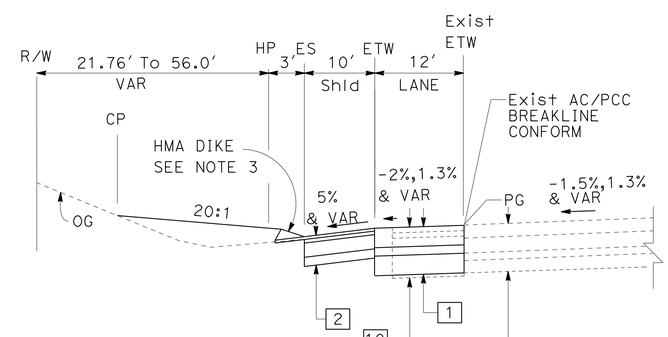

ROUTE 405
"A" 340+07.74 TO "A" 345+69.45

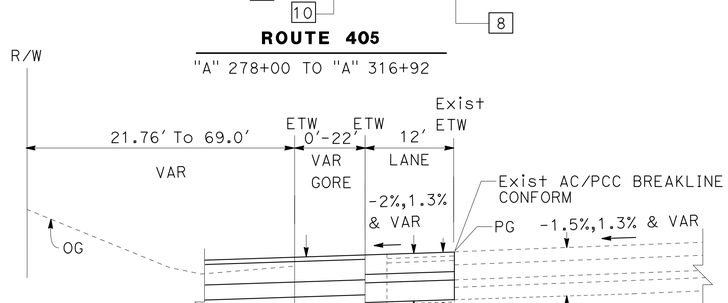

ROUTE 405
"A" 316+92 TO "A" 329+62.84
"A" 329+92 TO "A" 338+66.24
"A" 347+77.22 TO "A" 352+13.74

TYPICAL CROSS SECTIONS

NO SCALE

2 **REPLACED PER ADDENDUM No. 2 DATED OCTOBER 13, 2016**

X-1

REVISED BY | DATE REVISED
FRED FAIZI | DAVID LAM
CALCULATED-DESIGNED BY | CHECKED BY
FUNCTIONAL SUPERVISOR: MATTHEW Q. CUGINI

STATE OF CALIFORNIA - DEPARTMENT OF TRANSPORTATION
Caltrans
DESIGN

LAST REVISION 10-12-16 | DATE PLOTTED => 12-OCT-2016 | TIME PLOTTED => 12:56

Dist	COUNTY	ROUTE	POST MILES TOTAL PROJECT	SHEET No.	TOTAL SHEETS
12	Ora	405	2.6/6.5	218	431

Fred Faizi 06-21-16
REGISTERED CIVIL ENGINEER DATE

06-27-16
PLANS APPROVAL DATE

REGISTERED PROFESSIONAL ENGINEER F. FAIZI No. C47267 Exp. 12-31-17 CIVIL STATE OF CALIFORNIA

THE STATE OF CALIFORNIA OR ITS OFFICERS OR AGENTS SHALL NOT BE RESPONSIBLE FOR THE ACCURACY OR COMPLETENESS OF SCANNED COPIES OF THIS PLAN SHEET.

2

ROADWAY QUANTITIES

SHEET No.	STATION	RUBBERIZED HMA (GAP GRADED)	GEOSYNTHETIC PAVEMENT INTERLAYER (PAVING FABRIC)	HOT MIX ASPHALT (TYPE A)	CONTINUOUSLY REINFORCED CONCRETE PAVEMENT	ISOLATION JOINT SEAL (SILICONE)	CLASS 2 AGGREGATE BASE	CLASS 2 AGGREGATE SUBBASE	PLACE HMA DIKE (TYPE C)	PLACE HMA DIKE (TYPE E)	PLACE HMA DIKE (TYPE F)	PLACE HMA (MISCELLANEOUS AREA)	CONCRETE BARRIER (TYPE 60GC)	CONCRETE BARRIER (TYPE 60GE)	CONCRETE BARRIER (TYPE 60GCP)	MINOR CONCRETE				DETECTABLE WARNING SURFACE
																ANCHOR BLOCK	TEXTURED PAVING	SIDEWALK	CURB RAMP	
		TON	SQYD	TON	CY	LF	CY	CY	LF	LF	LF	SQYD	LF	LF	LF	CY	CY	CY	CY	SQFT
L-8	"A" 269+50 TO 284+50 (MEDIAN)	812.9		1017.9			2116.0	1322.3					1326.2	137.8						
	"A" 269+50 TO 284+50 (HOV)			513.2	848.2	1500		615.9												
	"A" 273+14 TO 273+26														12					
	"A" 276+89 TO 277+01														12					
	"A" 278+00 TO 284+50 (WIDENING)	113.2		172.1	100.1	650	205.1	215.8		431										
	"A" 277+94 TO 278+06														12					
	"A" 282+94 TO 283+06														12					
L-9	"A" 284+50 TO 298+50 (MEDIAN)	688.8		862.6			188.2	1120.5					1236							
	"A" 284+50 TO 291+82.44 (HOV)			246.6	394.6	732.4		296.0												
	"A" 284+50 TO 298+50 (WIDENING)	210.1		552.1	551.2	1400	425.4	349.1		600										
	"A" 284+89 TO 285+01														12					
	"A" 285+68 TO 287+08													140						
	"A" 292+89 TO 293+01														12					
L-10	"A" 298+50 TO 301+85 (MEDIAN)	66.9		83.7			187.1	108.7					323							
	"A" 298+50 TO 312+50 (WIDENING)	209.5		593.3	628.4	1400	424.4	348.9		450										
	"A" 300+94 TO 301+06														12					
L-11	"A" 312+50 TO 326+50 (WIDENING)	233.3		842.4	565.3	1400	403.1	1049.2												
	"A" 326+00 TO 326+12																			
	"D" 22+92 TO 26+50	107.2		652.3			134.0	562.8		358										
	"A" 316+92 TO "A" 322+92	3.7	945	43.2			4.7	20.0	50	780	38									
	"D" 22+92 TO "D" 26+50		947																	
L-12	"A" 326+50 TO 341+50 (WIDENING)	287.8		1786.0	580.5	1500	397.1	1772.8												
	"A" 329+62.84 TO 333+47.75						76.7										101.3			
	"A" 338+66.24 TO 340+07.74						20.9										27.6			
	"C" 32+92 TO 46+30.70	566.6	4210	3442.1			694.6	249.1				916.7								
	"C" 45+20 TO 42+90			3.04			12.9					2.4	208.5					11.6	4.4	36
	"D" 26+50 TO 39+70	681.8	6237	4107.5			852.2	3579.1	55	620	50					2.9				
	"E" 23+95 TO 24+15																			
L-13	"A" 341+50 TO 352+14.90 (WIDENING)	221.8		1047.0	411.5	1064.9	373.6	998.2												
	"A" 345+69.45 TO 347+77.22 AND "A" 357+00						35.0									2.9	46.2			
	"B" 43+05.30 TO 50+46	383.6		2237.1			452.4	1900.2	50	741	37	2.4								
	"B" 43+05.30 TO "A" 352+14.90		3588																	
	TOTAL THIS SHEET	4587.2	15927	18202.1	4079.8	9647.3	7003.4	14508.6	155	3974	125	921.5	3093.7	277.8	84	5.8	175.1	11.6	4.4	36
	TOTAL FROM Q-2	2848.6		4377.4	1269.3	2350	7655.3	5606.1					8176.7	992.6	204					
	TOTAL FROM LQ-1						68													
	GRAND TOTAL	7435.8	15927	22579.5	5349.1	11997.3	14726.7	20114.7	155	3974	125	921.5	11270.4	1270.4	288	5.8	175.1	11.6	4.4	36

2 **REPLACED PER ADDENDUM No. 2 DATED OCTOBER 13, 2016**

SUMMARY OF QUANTITIES

Q-3

REVISED BY | DATE REVISED
VANESSA RAGLAND | FRED FAIZI
CALCULATED-DESIGNED BY | CHECKED BY
FUNCTIONAL SUPERVISOR | MATTHEW CUGINI
STATE OF CALIFORNIA - DEPARTMENT OF TRANSPORTATION
Caltrans
DESIGN

LAST REVISION 10-12-16 | DATE PLOTTED => 12-OCT-2016 | TIME PLOTTED => 12:56