Dist	COUNTY	ROUTE	POST MILES TOTAL PROJECT	SHEET No.	TOTAL SHEETS
12	Ora	405	2.6/6.5	401	431

REGISTERED CIVIL ENGINEER

October 30, 2015
PLANS APPROVAL DATE

REGISTERED PROFESSIONAL ENGINEER Stanley P. Johnson No. C57793 Exp. 3-31-16 CIVIL STATE OF CALIFORNIA

THE STATE OF CALIFORNIA OR ITS OFFICERS OR AGENTS SHALL NOT BE RESPONSIBLE FOR THE ACCURACY OR COMPLETENESS OF SCANNED COPIES OF THIS PLAN SHEET.

TO ACCOMPANY PLANS DATED 06-27-16

2010 REVISED STANDARD PLAN RSP ES-7M

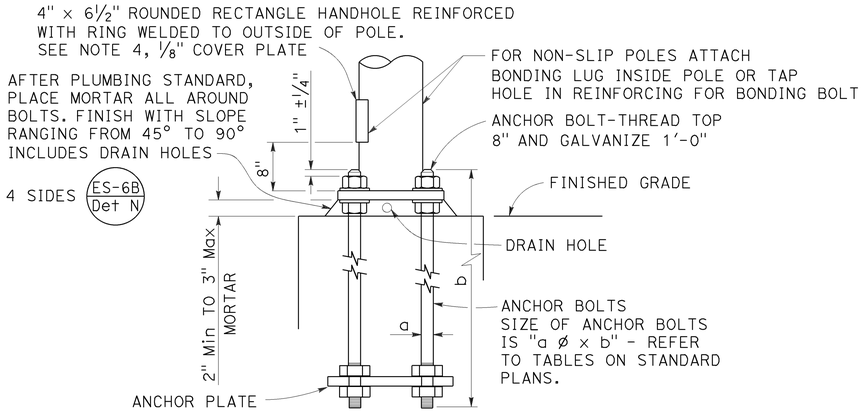

HANDHOLE AND ANCHORAGE
DETAIL A

IDENTIFICATION NUMBER

1. Attach a stamped metal tag with pole's identification number above the handhole. ¼" high number, minimum.
2. Attach a stamped metal tag with mast arm's identification number to the bottom of the signal mast arm near the pole plate. ¼" high number, minimum.

Type — Load case (Use SL for special load case) — Design wind velocity (mph) — Signal mast arm length (ft) { Near handhole: Maximum signal mast arm length for pole type; Near pole plate: Installed signal mast arm length } — Standard plan year — Only for poles or mast arms using Detail F — Only for poles or mast arms using ES-7D

26A - 3 - 100 - 45 - 10 - F or FB

SAMPLE IDENTIFICATION NUMBER

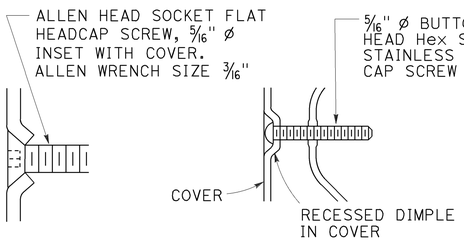

TYPICAL DETAIL
DETAIL B-1

ALTERNATIVE DETAIL
DETAIL B-2

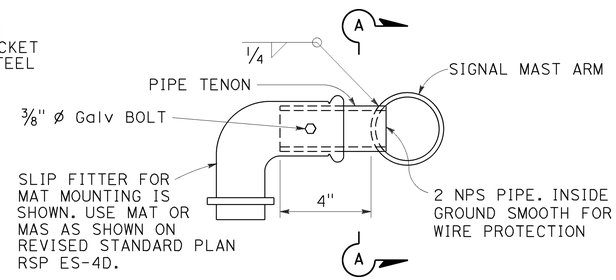

SIDE TENON
DETAIL S-1

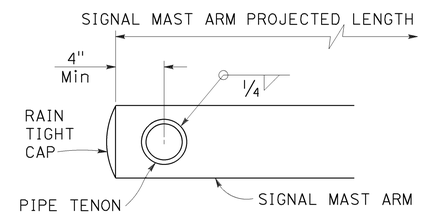

SECTION A-A

PIPE TENONS
DETAIL S

NOTES:

1. Provide a Hex nut, leveling nut and 2 washers for each bolt.
2. Luminaire mast arms shall be round, tapered steel tubes, taper of 0.1375" to 0.143-inch per foot with an end section 2⅜" OD for mounting hardware. Extensions of 2 NPS Standard pipe and 7" long may be used at the option of the manufacturer. When low pressure sodium luminaires are required, the extension shall be 1'-3".
3. Signal mast arms shall be round, tapered steel tubes, maximum taper 0.143-inch per foot.
4. Handhole reinforcement ring shall be ¼" x 2" for 0.1196" to 0.2391" thick poles, ⅜" x 2" for 0.3125" thick poles.
5. Handholes shall be located on the downstream side of traffic.
6. Detail F, fatigue resistant weld, is required at socket welded signal mast arm plate and pole base plate.
7. Cap screws shall be tightened by the turn-of-nut method ⅓ turn from a snug tight condition. No washer will be required.
8. Outside diameter, wall thickness, and corresponding section properties of poles and mast arms as shown in the Standard Plans are minimums. Unless otherwise specified, alternative sections shall require approval by the Engineer.
9. Wind Loading (3 seconds gust): 100 mph
10. Unit Stresses (Structural steel):
    fy = 55,000 psi (tapered steel tube and anchor bolts)
    fy = 50,000 psi (unless otherwise noted)
11. Unit Stresses (Reinforced concrete):
    f'c = 3,625 psi
    fy = 60,000 psi

WELD SIZE	WALL THICKNESS
3/16"	0.1196"
¼"	0.1793"
5/16"	0.2391"
⅜"	0.3125"

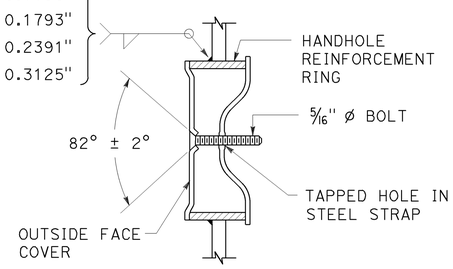

TAMPER RESISTANT HANDHOLE COVER
DETAIL B

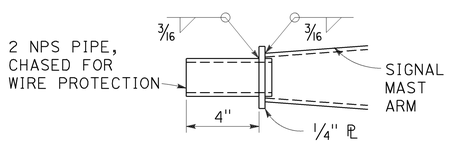

TIP TENON
DETAIL TL

This detail supersedes Detail S when so designated

WELD SIZE	WALL THICKNESS
⅛"	0.1196"
3/16"	0.1793"
¼"	0.2391"

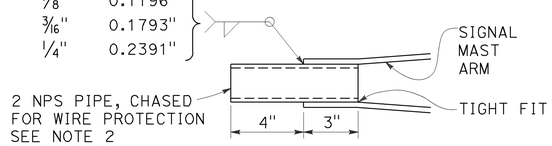

TIP TENON
DETAIL TS

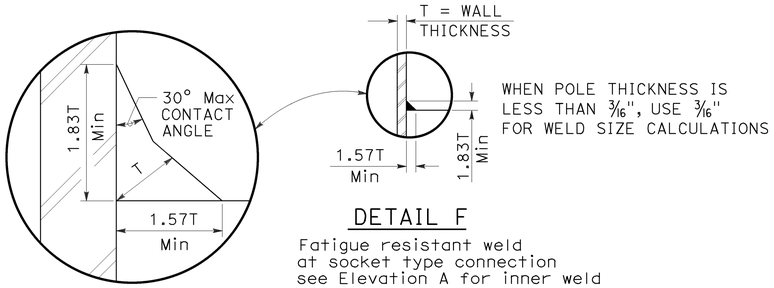

DETAIL F

Fatigue resistant weld at socket type connection see Elevation A for inner weld

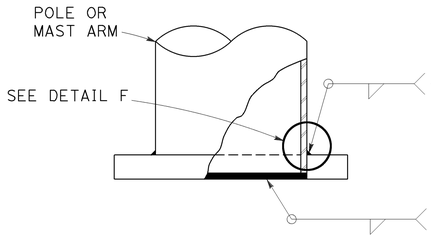

WELD SIZE	WALL THICKNESS
¼"	0.1196"
5/16"	0.1793"
⅜"	0.2391"
7/16"	0.3125"

⅛"	0.1196"
3/16"	0.1793"
¼"	0.2391"
5/16"	0.3125"

ELEVATION A

STATE OF CALIFORNIA
DEPARTMENT OF TRANSPORTATION

ELECTRICAL SYSTEMS (SIGNAL AND LIGHTING STANDARD, DETAIL No. 1)

NO SCALE

RSP ES-7M DATED OCTOBER 30, 2015 SUPERSEDES STANDARD PLAN ES-7M DATED MAY 20, 2011 - PAGE 474 OF THE STANDARD PLANS BOOK DATED 2010.

REVISED STANDARD PLAN RSP ES-7M

Dist	COUNTY	ROUTE	POST MILES TOTAL PROJECT	SHEET No.	TOTAL SHEETS
12	Ora	405	2.6/6.5	402	431

REGISTERED CIVIL ENGINEER

October 30, 2015
PLANS APPROVAL DATE

REGISTERED PROFESSIONAL ENGINEER Stanley P. Johnson No. C57793 Exp. 3-31-16 CIVIL STATE OF CALIFORNIA

THE STATE OF CALIFORNIA OR ITS OFFICERS OR AGENTS SHALL NOT BE RESPONSIBLE FOR THE ACCURACY OR COMPLETENESS OF SCANNED COPIES OF THIS PLAN SHEET.

TO ACCOMPANY PLANS DATED 06-27-16

2010 REVISED STANDARD PLAN RSP ES-7N

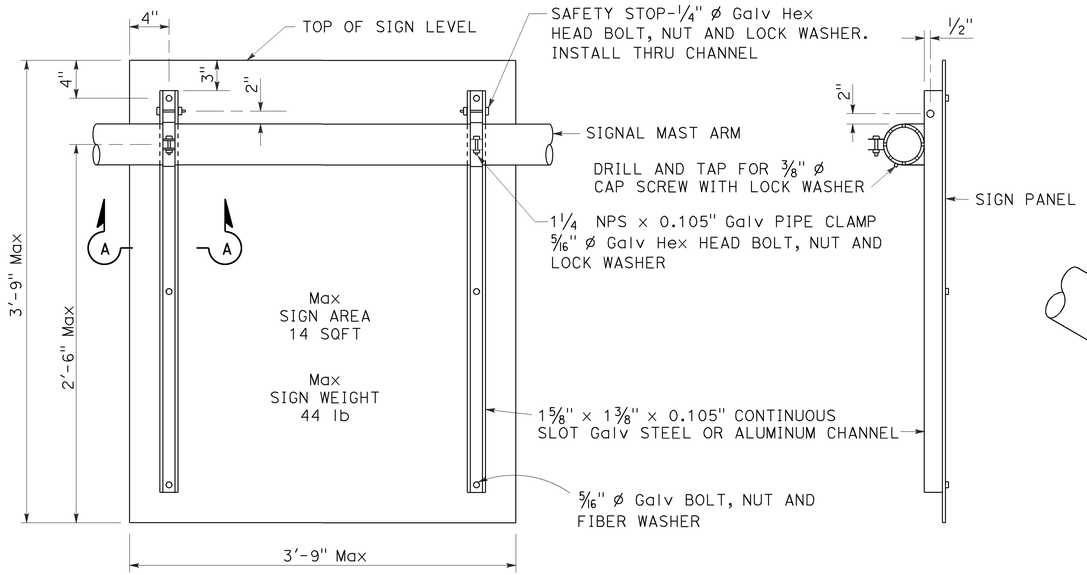

REAR VIEW

SIDE VIEW

SIGN MOUNTING DETAILS
DETAIL U

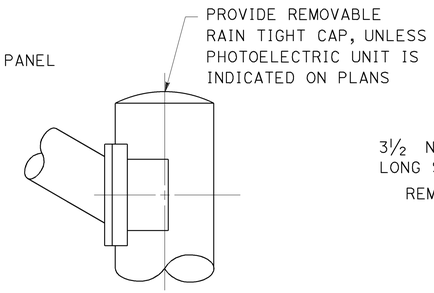

STANDARD TOP
DETAIL B-1

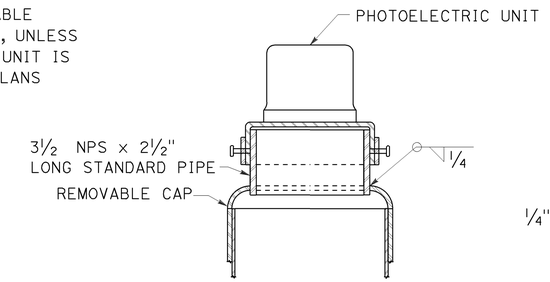

MOUNTING ADAPTER FOR
PHOTOELECTRIC UNIT
DETAIL B-2

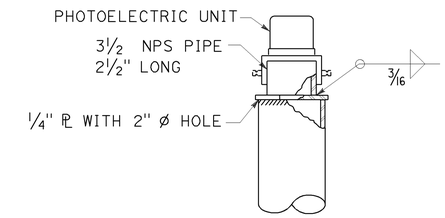

ALTERNATIVE
MOUNTING ADAPTER
DETAIL B-3

POLE TOP DETAILS
DETAIL B

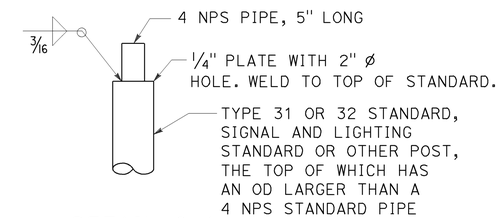

DETAIL C-1

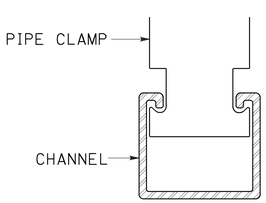

SECTION A-A

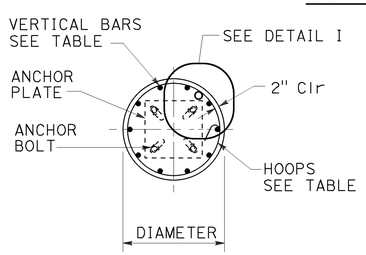

SECTION B-B

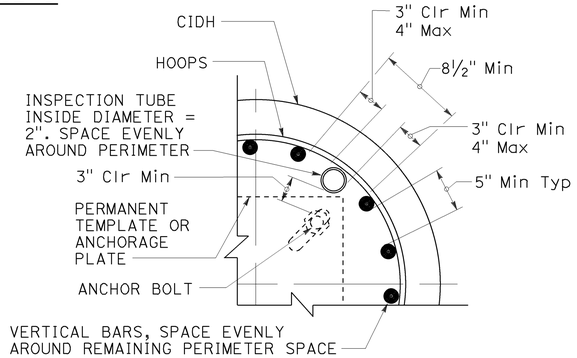

INSPECTION TUBE PLACEMENT
DETAIL I

CIDH REINFORCING AND INSPECTION TUBE SCHEDULE			
CIDH DIAMETER	VERTICAL BARS	HOOPS (WELDED)	INSPECTION TUBE
2 ft	8-#5	#4 AT 6	2
2.5 ft	10-#6		4*
3 ft	12-#7	#5 AT 6	
3.5 ft	14-#8		4
4 ft	18-#9	2-#4 AT 7	5
5 ft	22-#10	2-#5 AT 7	6
6 ft	26-#11	2-#6 AT 7	7

* FOR SLIP BASE VERSIONS WITH 3 ANCHOR BOLTS USE 3 INSPECTION TUBES.

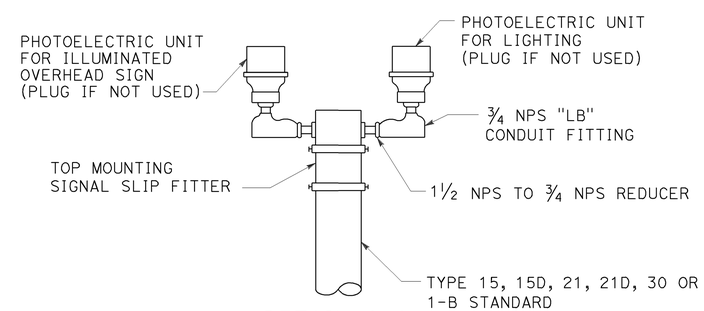

DETAIL C-2

DUAL PHOTOELECTRIC UNIT MOUNTING DETAIL
DETAIL C

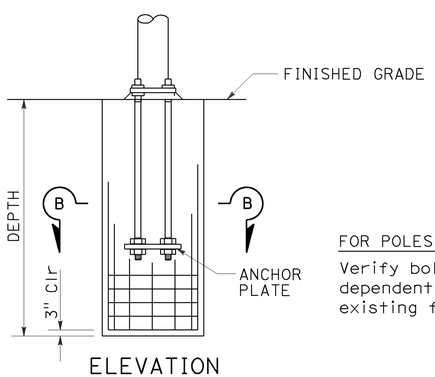

ELEVATION

FOR POLES TO BE INSTALLED ON EXISTING FOUNDATION:
Verify bolt circles, anchor bolt sizes and dependent dimensions for poles to be installed on existing foundations before fabricating the poles.

CAST-IN-DRILLED-HOLE PILE FOUNDATION, REINFORCED PILE
DETAIL A

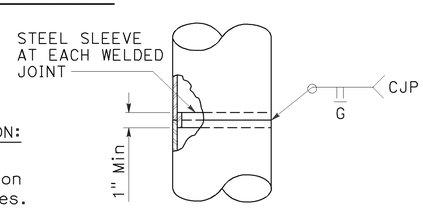

FOR UNIFORM TUBE THICKNESS
DETAIL T-1

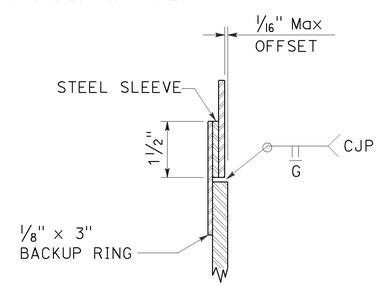

AT TUBE THICKNESS CHANGE
DETAIL T-2

POLE SPLICES
DETAIL T

STATE OF CALIFORNIA
DEPARTMENT OF TRANSPORTATION

ELECTRICAL SYSTEMS (SIGNAL AND LIGHTING STANDARD, DETAIL No. 2)

NO SCALE

RSP ES-7N DATED OCTOBER 30, 2015 SUPERSEDES STANDARD PLAN ES-7N DATED MAY 20, 2011 - PAGE 475 OF THE STANDARD PLANS BOOK DATED 2010.

REVISED STANDARD PLAN RSP ES-7N

9-1-15

DIST	COUNTY	ROUTE	POST MILES TOTAL PROJECT	SHEET NO.	TOTAL SHEETS
12	Ora	405	2.6/6.5	403	431

Theresa Gabriel
REGISTERED ELECTRICAL ENGINEER

April 15, 2016
PLANS APPROVAL DATE

REGISTERED PROFESSIONAL ENGINEER Theresa Aziz Gabriel No. E15129 Exp. 6-30-16 ELECTRICAL STATE OF CALIFORNIA

THE STATE OF CALIFORNIA OR ITS OFFICERS OR AGENTS SHALL NOT BE RESPONSIBLE FOR THE ACCURACY OR COMPLETENESS OF SCANNED COPIES OF THIS PLAN SHEET.

TO ACCOMPANY PLANS DATED 06-27-16

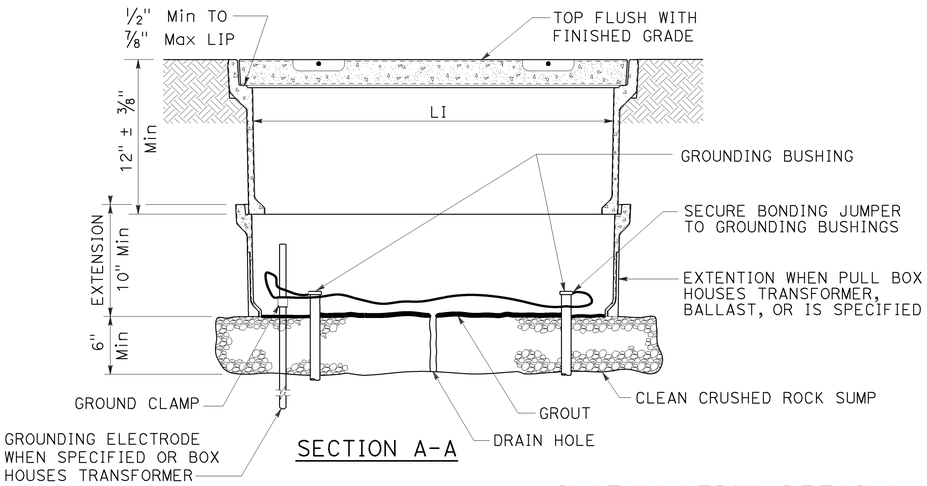

SECTION A-A

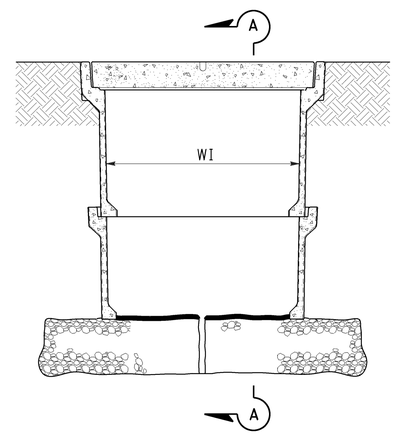

SIDE VIEW

INSTALLATION DETAILS

DETAIL A

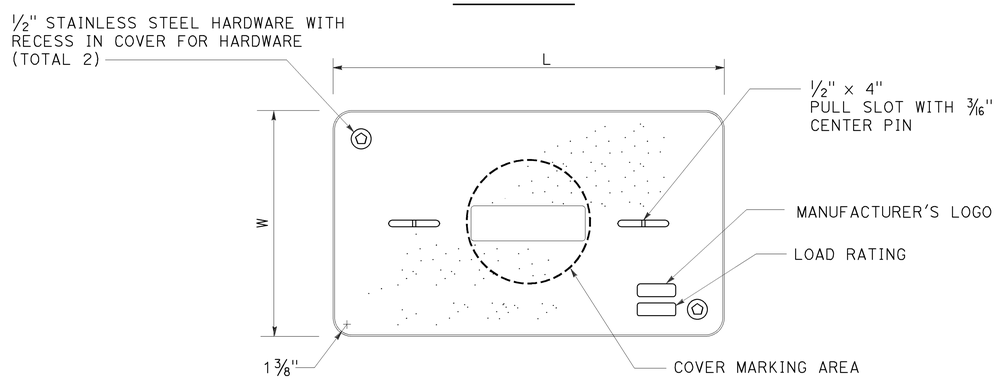

COVER TOP VIEW

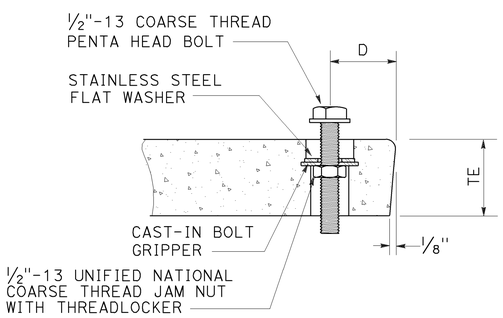

TYPICAL COVER CAPTIVE BOLT

OR SIMILAR

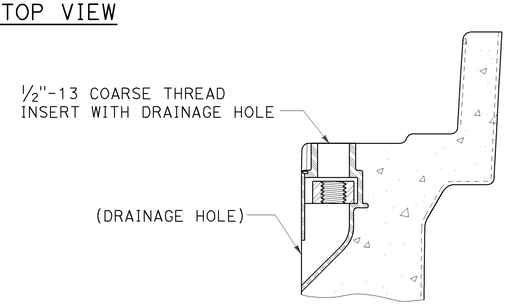

TYPICAL THREADED INSERT

OR SIMILAR

DIMENSION TABLE

PULL BOX	PULL BOX					COVER				
	MINIMUM DEPTH BOX	MINIMUM DEPTH EXTENSION	MINIMUM WEIGHT	LI Min	WI Min	TE	D	L	W	MINIMUM WEIGHT
No. 3 1/2	12"	N/A	40 lb	1' - 3"	9"	1 3/4"	1 3/4"	1'-3 1/4" - 1'-3 3/8"	10" - 10 1/8"	30 lb
No. 5	12"	10"	55 lb	1' - 8"	11"	2"	1 3/4"	1'-11 1/4"	1'-1 3/4"	60 lb
No. 6	12"	10"	70 lb	2' - 4 1/4"	1' - 3 1/4"	2"	2"	2'-6 1/2"	1'-5 1/2"	85 lb

NOTES:

1. The nominal dimensions of the opening in which the cover sets shall be the same as the cover dimensions except the length and width dimensions shall be 1/8" greater.
2. Covers and boxes shall be interchangeable with California standard male and female gages. When interchanged with a standard male or female gage, the top surfaces shall be flush within 1/8". Top outside radius of covers and pull boxes shall have a 1/8" radius.
3. Dimensions for the cover for non-traffic pull box are nominal values.

STATE OF CALIFORNIA
DEPARTMENT OF TRANSPORTATION

ELECTRICAL SYSTEMS (NON-TRAFFIC PULL BOX)

NO SCALE

RSP ES-8A DATED APRIL 15, 2016 SUPERSEDES RSP ES-8A DATED OCTOBER 30, 2015 AND RSP ES-8A DATED JULY 19, 2013 AND RSP ES-8A DATED JANUARY 20, 2012 THAT SUPPLEMENTS THE STANDARD PLANS BOOK DATED 2010.

REVISED STANDARD PLAN RSP ES-8A

2010 REVISED STANDARD PLAN RSP ES-8A

1-22-16

DIST	COUNTY	ROUTE	POST MILES TOTAL PROJECT	SHEET NO.	TOTAL SHEETS
12	Ora	405	2.6/6.5	404	431

Theresa Gabriel
REGISTERED ELECTRICAL ENGINEER

April 15, 2016
PLANS APPROVAL DATE

REGISTERED PROFESSIONAL ENGINEER
Theresa Aziz Gabriel
No. E15129
Exp. 6-30-16
ELECTRICAL
STATE OF CALIFORNIA

THE STATE OF CALIFORNIA OR ITS OFFICERS OR AGENTS SHALL NOT BE RESPONSIBLE FOR THE ACCURACY OR COMPLETENESS OF SCANNED COPIES OF THIS PLAN SHEET.

TO ACCOMPANY PLANS DATED 06-27-16

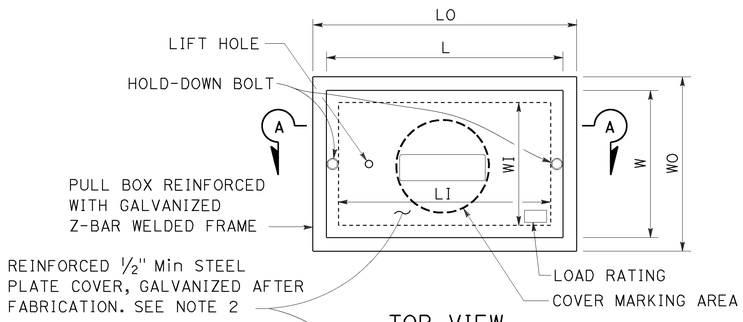

TOP VIEW

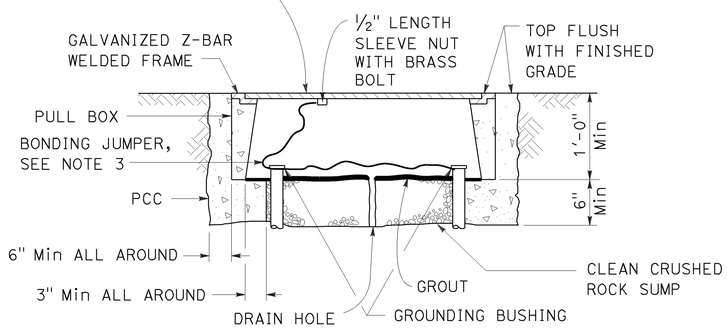

SECTION A-A

No. 3½(T), No. 5(T) AND No. 6(T) TRAFFIC PULL BOX

NOTES:

1. Traffic pull box shall be provided with steel cover and special concrete footing. Steel cover shall have embossed non-skid pattern.
2. Steel reinforcing shall be as regularly used in the standard products of the respective manufacturer.
3. Bonding jumper for metal covers shall be 3' long, minimum.
4. The nominal dimensions of the opening in which the cover sets shall be the same as the cover dimensions except the length and width dimensions shall be ⅛" greater.
5. Covers and boxes shall be interchangeable with California standard male and female gages. When interchanged with a standard male or female gage, the top surfaces shall be flush within ⅛".

DIMENSION TABLE

PULL BOX	PULL BOX						COVER	
	MINIMUM * THICKNESS	MINIMUM DEPTH BOX AND EXTENSION	LO	LI	WO	WI	L **	W **
No. 3½(T)	1½"	1'-0"	1'-10" - 1'-11"	1'-5" - 1'-6½"	1'-3" - 1'-4"	10" - 1'-0"	1'-8" -1'-8½"	1'-1" - 1'-2"
No. 5(T)	1¾"	1'-0"	2'-5" - 2'-6"	2'-0" - 2'-1"	1'-6" - 1'-7"	1'-1" - 1'-2"	2'-3" - 2'-3½"	1'-4" - 1'-4½"
No. 6(T)	2"	1'-0"	2'-11" - 3'-1"	2'-6" - 2'-7"	1'-10" - 2'-0"	1'-5" - 1'-6"	2'-9" - 2'-9½"	1'-8" - 1'-8½"

* EXCLUDING CONDUIT WEB ** TOP DIMENSION

STATE OF CALIFORNIA
DEPARTMENT OF TRANSPORTATION

ELECTRICAL SYSTEMS (TRAFFIC PULL BOX)

NO SCALE

RSP ES-8B DATED APRIL 15, 2016 SUPERSEDES RSP ES-8B DATED OCTOBER 30, 2015 AND RSP ES-8B DATED JULY 19, 2013 AND RSP ES-8B DATED JANUARY 20, 2012 THAT SUPPLEMENTS THE STANDARD PLANS BOOK DATED 2010.

REVISED STANDARD PLAN RSP ES-8B

2010 REVISED STANDARD PLAN RSP ES-8B

1-22-16

Dist	COUNTY	ROUTE	POST MILES TOTAL PROJECT	SHEET No.	TOTAL SHEETS
12	Ora	405	2.6/6.5	405	431

Theresa Gabriel
REGISTERED ELECTRICAL ENGINEER

October 30, 2015
PLANS APPROVAL DATE

REGISTERED PROFESSIONAL ENGINEER
Theresa Aziz Gabriel
No. E15129
Exp. 6-30-16
ELECTRICAL
STATE OF CALIFORNIA

THE STATE OF CALIFORNIA OR ITS OFFICERS OR AGENTS SHALL NOT BE RESPONSIBLE FOR THE ACCURACY OR COMPLETENESS OF SCANNED COPIES OF THIS PLAN SHEET.

TO ACCOMPANY PLANS DATED 06-27-16

NOTE:

Curves represent the minimum footcandle (FC).

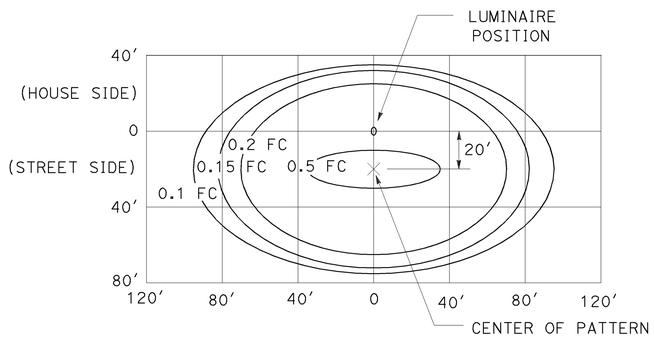

LED LUMINAIRE 165 W

34′ Mounting Height

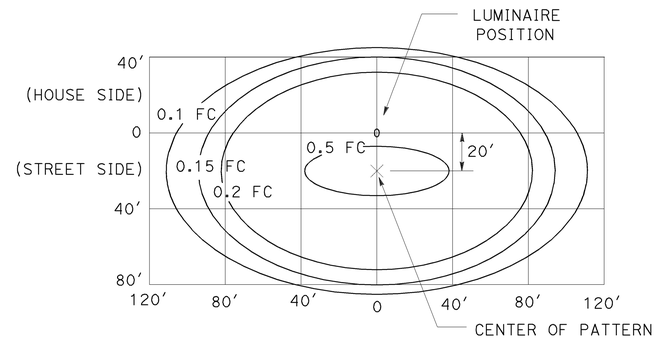

LED LUMINAIRE 235 W

40′ Mounting Height

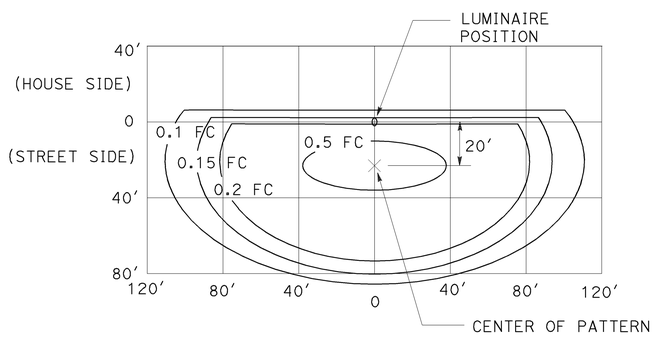

LED LUMINAIRE 235 W

40′ Mounting Height
with back side control

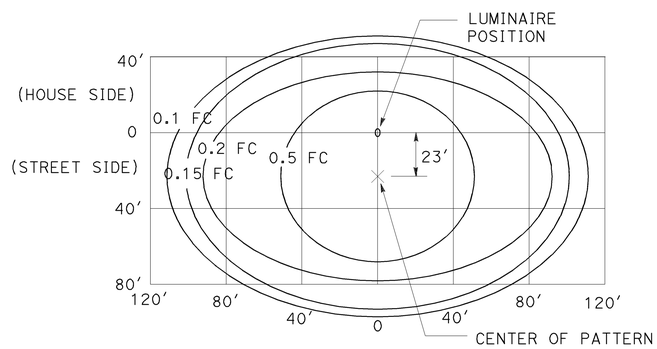

LED LUMINAIRE 300 W

40′ Mounting Height

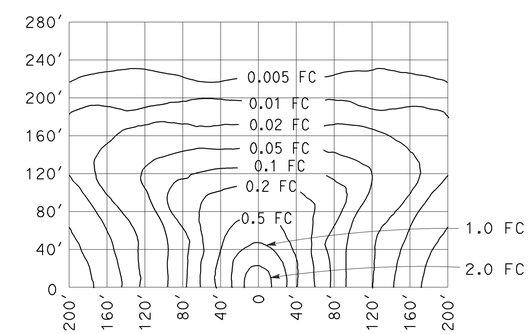

LOW-PRESSURE SODIUM LUMINAIRE 180 W

40′ Mounting Height
Lamp operated at 33,000 lm

STATE OF CALIFORNIA
DEPARTMENT OF TRANSPORTATION

ELECTRICAL SYSTEMS (ISOFOOTCANDLE CURVES)

NO SCALE

RSP ES-10A DATED OCTOBER 30, 2015 SUPERSEDES RSP ES-10A DATED JULY 19, 2013 THAT SUPPLEMENTS THE STANDARD PLANS BOOK DATED 2010.

REVISED STANDARD PLAN RSP ES-10A

2010 REVISED STANDARD PLAN RSP ES-10A

Dist	COUNTY	ROUTE	POST MILES TOTAL PROJECT	SHEET No.	TOTAL SHEETS
12	Ora	405	2.6/6.5	406	431

Theresa Gabriel
REGISTERED ELECTRICAL ENGINEER

October 30, 2015
PLANS APPROVAL DATE

REGISTERED PROFESSIONAL ENGINEER
Theresa Aziz Gabriel
No. E15129
Exp. 6-30-16
ELECTRICAL
STATE OF CALIFORNIA

THE STATE OF CALIFORNIA OR ITS OFFICERS OR AGENTS SHALL NOT BE RESPONSIBLE FOR THE ACCURACY OR COMPLETENESS OF SCANNED COPIES OF THIS PLAN SHEET.

TO ACCOMPANY PLANS DATED 06-27-16

NOTE:

Curves represent the minimum footcandle (FC).

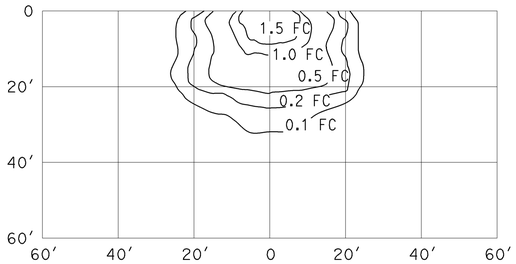

HIGH-PRESSURE SODIUM
WALL-MOUNTED LUMINAIRE 70 W

15′ Mounting Height
ANSI Designation S62
Lamp operated at 5,800 lm

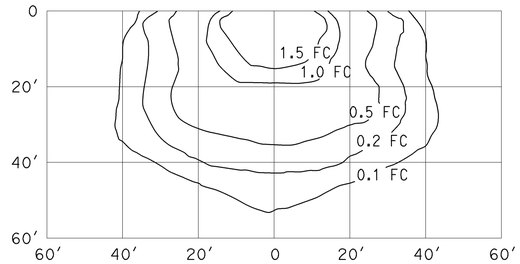

HIGH-PRESSURE SODIUM
WALL-MOUNTED LUMINAIRE 100 W

15′ Mounting Height
ANSI Designation S54
Lamp operated at 9,500 lm

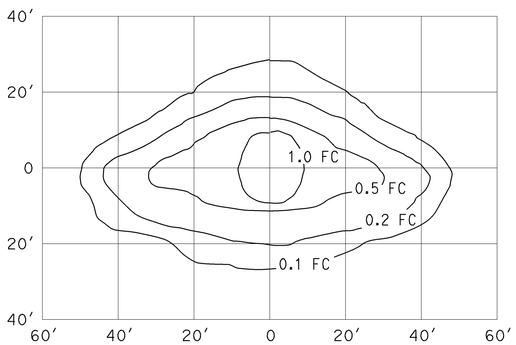

HIGH-PRESSURE SODIUM
PENDANT SOFFIT LUMINAIRE 70 W
TYPE III SHORT

17′ Mounting Height
ANSI Designation S62
Lamp operated at 5,800 lm

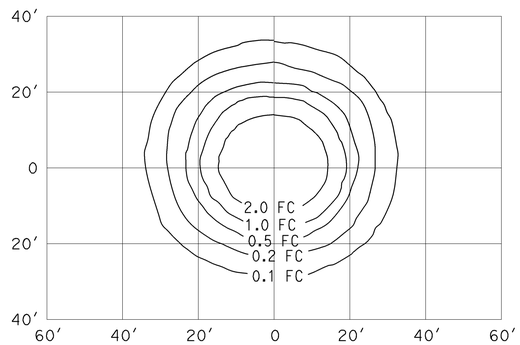

HIGH-PRESSURE SODIUM
PENDANT SOFFIT LUMINAIRE 70 W

17′ Mounting Height
ANSI Designation S62
Lamp operated at 5,800 lm

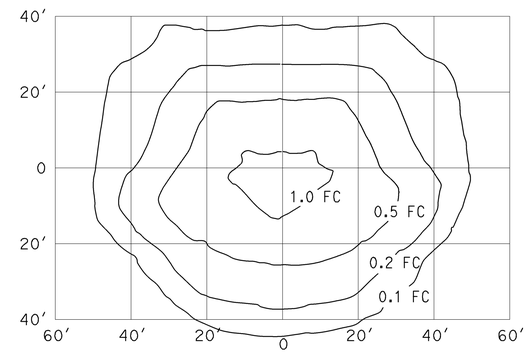

HIGH-PRESSURE SODIUM
FLUSH-MOUNTED SOFFIT LUMINAIRE 70 W

17′ Mounting Height
ANSI Designation S62
Lamp operated at 5,800 lm

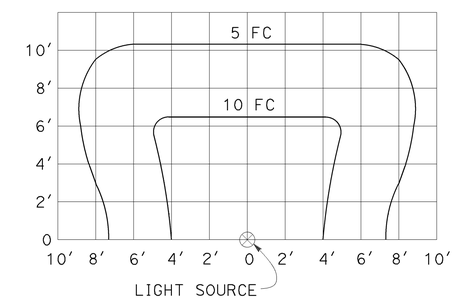

INDUCTION SIGN
LIGHTING FIXTURE 85 W

STATE OF CALIFORNIA
DEPARTMENT OF TRANSPORTATION

ELECTRICAL SYSTEMS (ISOFOOTCANDLE CURVES)

NO SCALE

RSP ES-10B DATED OCTOBER 30, 2015 SUPERSEDES RSP ES-10B DATED JULY 20, 2012 THAT SUPPLEMENTS THE STANDARD PLANS BOOK DATED 2010.

REVISED STANDARD PLAN RSP ES-10B

2010 REVISED STANDARD PLAN RSP ES-10B

Dist	COUNTY	ROUTE	POST MILES TOTAL PROJECT	SHEET No.	TOTAL SHEETS
12	Ora	405	2.6/6.5	407	431

REGISTERED CIVIL ENGINEER

July 19, 2013
PLANS APPROVAL DATE

REGISTERED PROFESSIONAL ENGINEER
Stanley P. Johnson
No. C57793
Exp. 3-31-14
CIVIL
STATE OF CALIFORNIA

THE STATE OF CALIFORNIA OR ITS OFFICERS OR AGENTS SHALL NOT BE RESPONSIBLE FOR THE ACCURACY OR COMPLETENESS OF SCANNED COPIES OF THIS PLAN SHEET.

TO ACCOMPANY PLANS DATED 06-27-16

STANDARD TYPE	SETBACK (DIMENSION A)
32	30'-0" (Min)
31	20'-0" (Min)
15, 15D, 15-SB, 21, 21D, 30	ARM LENGTH (Min)

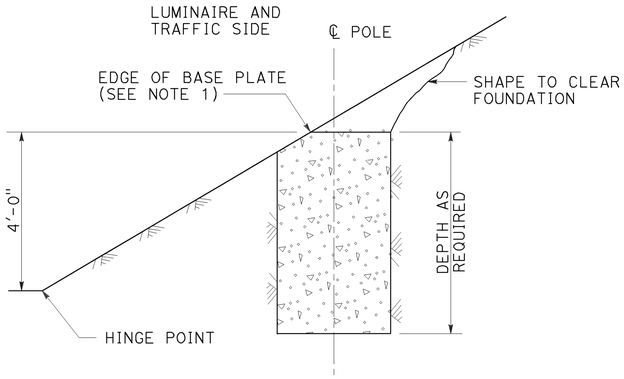

CUT SLOPES
STEEPER THAN 4:1,
LESS THAN 2:1
DETAIL A-1
See Note 2 and 3

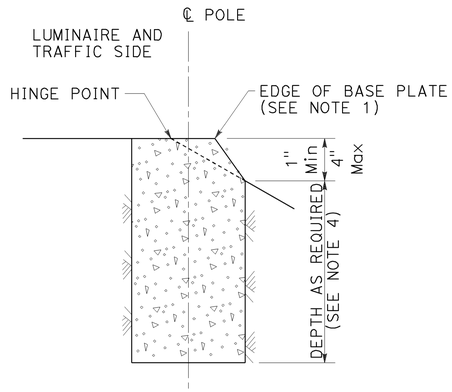

FILL SLOPES
STEEPER THAN 4:1,
LESS THAN 2:1
DETAIL A-2
See Note 2 and 3

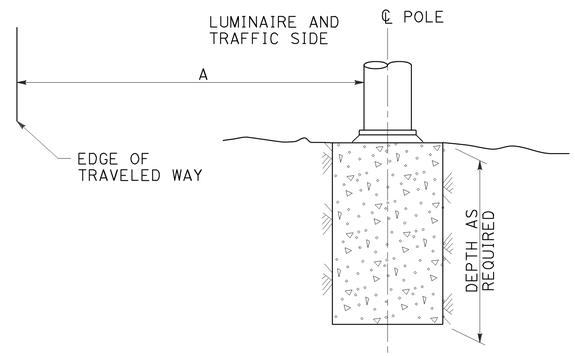

FLAT SECTIONS, CUT OR FILL SLOPES
4:1 OR FLATTER
DETAIL A-3
See Note 2

FOUNDATIONS ADJACENT TO ALL ROADWAYS EXCEPT
IN SIDEWALK, MEDIAN AND ISLAND AREAS
DETAIL A

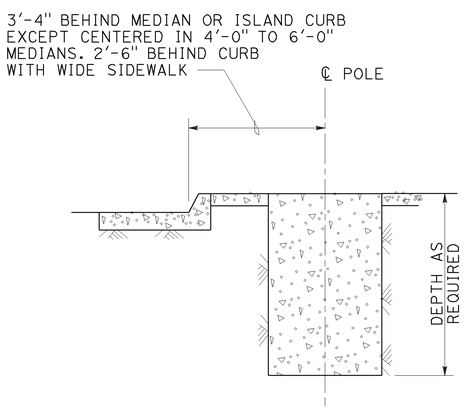

MEDIAN, ISLAND
OR WIDE SIDEWALK
DETAIL B-1
7' Wide and wider

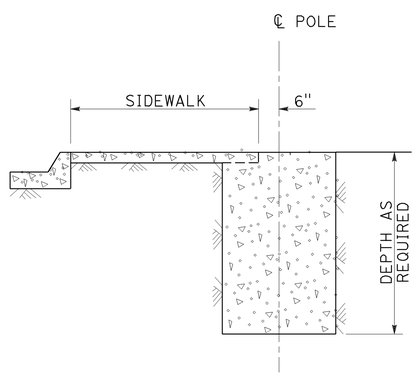

NARROW SIDEWALK
DETAIL B-2
Less than 7' wide

FOUNDATIONS IN SIDEWALK, MEDIAN AND ISLAND AREAS
DETAIL B

NOTES:

1. Where a portion of the foundation is above grade, the top edges shall have a 1" chamfer.
2. Slopes shall be horizontal to vertical ratio (Horizontal : Vertical).
3. Horizontal setbacks on cut and fill slopes steeper than 4:1 shall not exceed the distance shown for flat sections.
4. CIDH embedment depth shall be increased beyond standard depths by the diameter of the CIDH.

STATE OF CALIFORNIA
DEPARTMENT OF TRANSPORTATION

ELECTRICAL SYSTEMS (FOUNDATION INSTALLATIONS)

NO SCALE

RSP ES-11 DATED JULY 19, 2013 SUPERSEDES STANDARD PLAN ES-11
DATED MAY 20, 2011 - PAGE 488 OF THE STANDARD PLANS BOOK DATED 2010.

REVISED STANDARD PLAN RSP ES-11

2010 REVISED STANDARD PLAN RSP ES-11

7-9-13

Dist	COUNTY	ROUTE	POST MILES TOTAL PROJECT	SHEET No.	TOTAL SHEETS
12	Ora	405	2.6/6.5	408	431

Theresa Gabriel
REGISTERED ELECTRICAL ENGINEER

April 15, 2016
PLANS APPROVAL DATE

REGISTERED PROFESSIONAL ENGINEER
Theresa Aziz Gabriel
No. E15129
Exp. 6-30-16
ELECTRICAL
STATE OF CALIFORNIA

THE STATE OF CALIFORNIA OR ITS OFFICERS OR AGENTS SHALL NOT BE RESPONSIBLE FOR THE ACCURACY OR COMPLETENESS OF SCANNED COPIES OF THIS PLAN SHEET.

TO ACCOMPANY PLANS DATED 06-27-16

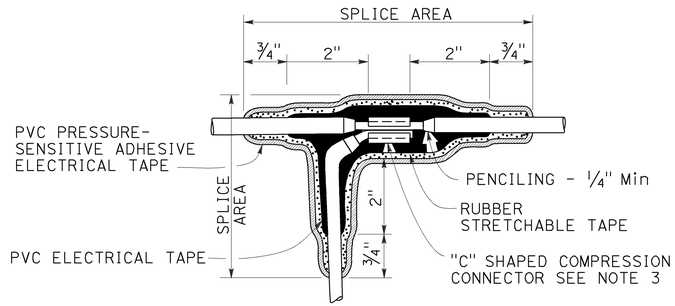

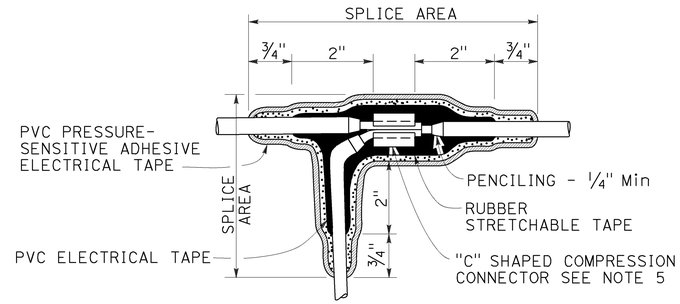

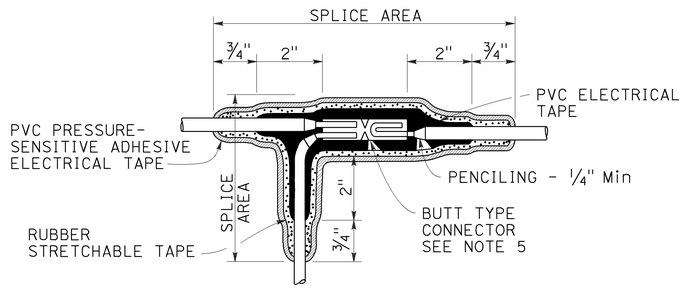

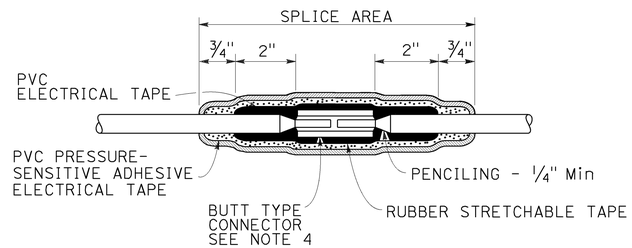

TYPICAL SPLICE INSULATION METHOD B

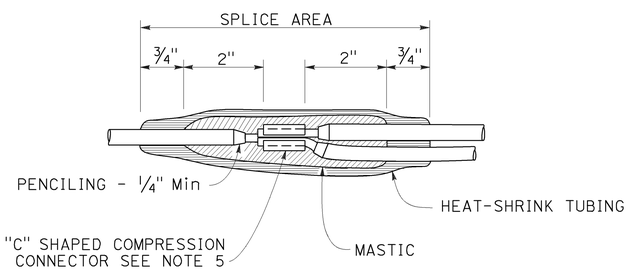

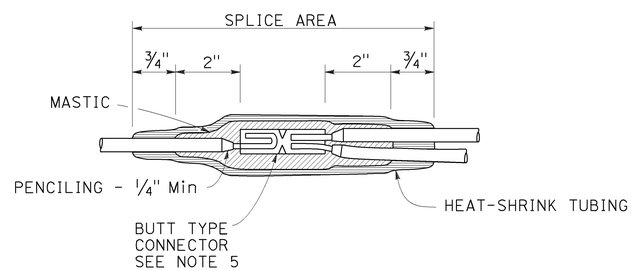

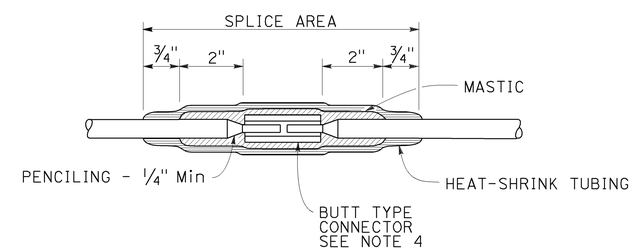

TYPICAL SPLICE INSULATION HEAT-SHRINK TUBING

NOTES:

1. Dimensions are minimum.
2. Rubber tapes shall be rolled after application.
3. Between 1 free-end and 1 through conductor.
4. Between 2 free-end conductors.
5. Between 3 free-end conductors.

STATE OF CALIFORNIA
DEPARTMENT OF TRANSPORTATION

ELECTRICAL SYSTEMS (SPLICE INSULATION METHODS DETAILS)

NO SCALE

RSP ES-13A DATED APRIL 15, 2016 SUPERSEDES RSP ES-13A DATED OCTOBER 30, 2015 AND STANDARD PLAN ES-13A DATED MAY 20, 2011 - PAGE 491 OF THE STANDARD PLANS BOOK DATED 2010.

REVISED STANDARD PLAN RSP ES-13A

2010 REVISED STANDARD PLAN RSP ES-13A

1-22-16

Dist	COUNTY	ROUTE	POST MILES TOTAL PROJECT	SHEET No.	TOTAL SHEETS
12	Ora	405	2.6/6.5	409	431

Theresa Gabriel
REGISTERED ELECTRICAL ENGINEER

April 15, 2016
PLANS APPROVAL DATE

REGISTERED PROFESSIONAL ENGINEER
Theresa Aziz Gabriel
No. E15129
Exp. 6-30-16
ELECTRICAL
STATE OF CALIFORNIA

THE STATE OF CALIFORNIA OR ITS OFFICERS OR AGENTS SHALL NOT BE RESPONSIBLE FOR THE ACCURACY OR COMPLETENESS OF SCANNED COPIES OF THIS PLAN SHEET.

TO ACCOMPANY PLANS DATED 06-27-16

CIRCUIT VOLTAGE	FUSE VOLTAGE RATING	FUSE CURRENT RATING						
		HPS LAMP BALLAST		LOW PRESSURE SODIUM BALLAST	INDUCTION SIGN LIGHTING	SINGLE PHASE (TWO WIRE) TRANSFORMERS (PRIMARY SIDE)		
		70 W	100 W	180 W	85 W	1 kVA	2 kVA	3 kVA
120 V	250 V	5 A	5 A	5 A	5 A	10 A	20 A	30 A
240 V	250 V	5 A	5 A	5 A	5 A	6 A	10 A	20 A
480 V	500-600 V	5 A	5 A	3 A	1 A (SEE NOTE 2)	3 A	6 A	10 A

NOTES:

1. Primary lines of multiple ballasts shall be provided with fused connectors. Fuse ratings shall be as noted above.
2. See Revised Standard Plan RSP ES-15D, Type SC3 control.

FUSE RATINGS FOR FUSED CONNECTORS

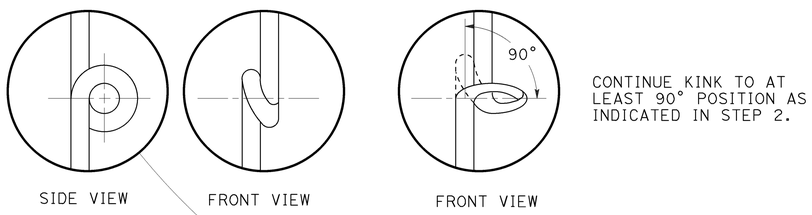

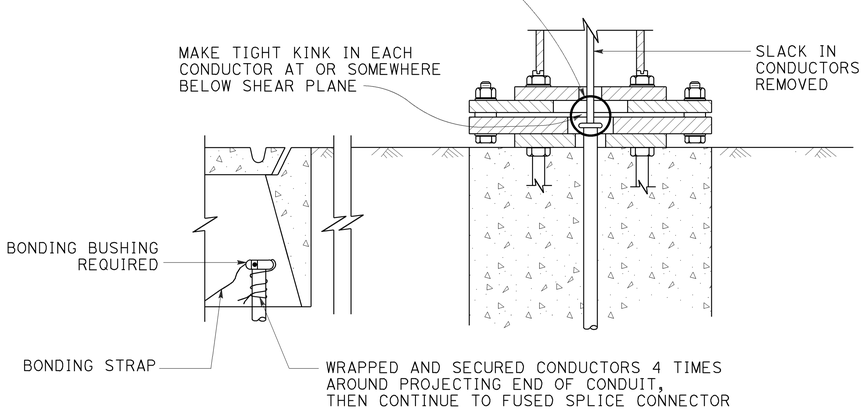

KINKING DETAIL FOR SLIP BASE STANDARDS

DETAIL A

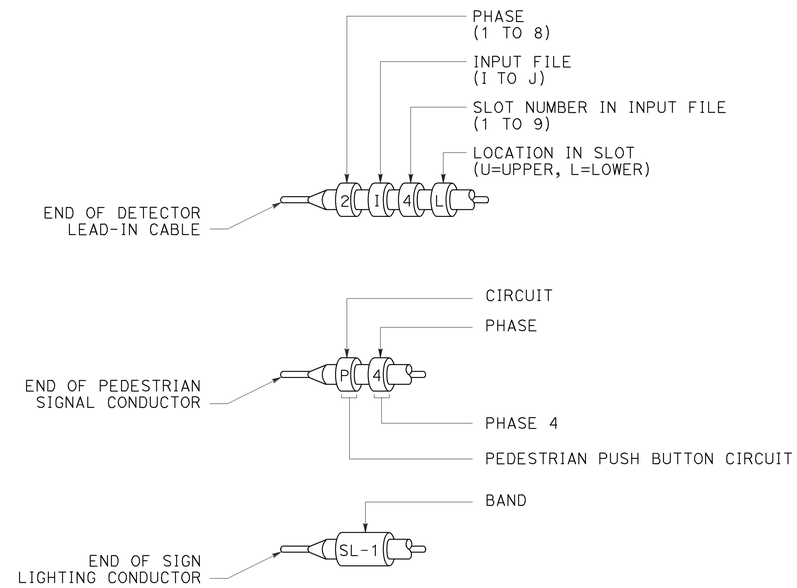

TYPICAL BANDING DETAILS

DETAIL B

STATE OF CALIFORNIA
DEPARTMENT OF TRANSPORTATION

ELECTRICAL SYSTEMS (FUSE RATING, KINKING AND BANDING DETAIL)

NO SCALE

RSP ES-13B DATED APRIL 15, 2016 SUPERSEDES STANDARD PLAN ES-13B DATED MAY 20, 2011 - PAGE 492 OF THE STANDARD PLANS BOOK DATED 2010.

REVISED STANDARD PLAN RSP ES-13B

2010 REVISED STANDARD PLAN RSP ES-13B

1-12-16

Dist	COUNTY	ROUTE	POST MILES TOTAL PROJECT	SHEET No.	TOTAL SHEETS
12	Ora	405	2.6/6.5	410	431

Theresa Gabriel
REGISTERED ELECTRICAL ENGINEER

October 30, 2015
PLANS APPROVAL DATE

REGISTERED PROFESSIONAL ENGINEER Theresa Aziz Gabriel No. E15129 Exp. 6-30-16 ELECTRICAL STATE OF CALIFORNIA

THE STATE OF CALIFORNIA OR ITS OFFICERS OR AGENTS SHALL NOT BE RESPONSIBLE FOR THE ACCURACY OR COMPLETENESS OF SCANNED COPIES OF THIS PLAN SHEET.

TO ACCOMPANY PLANS DATED 06-27-16

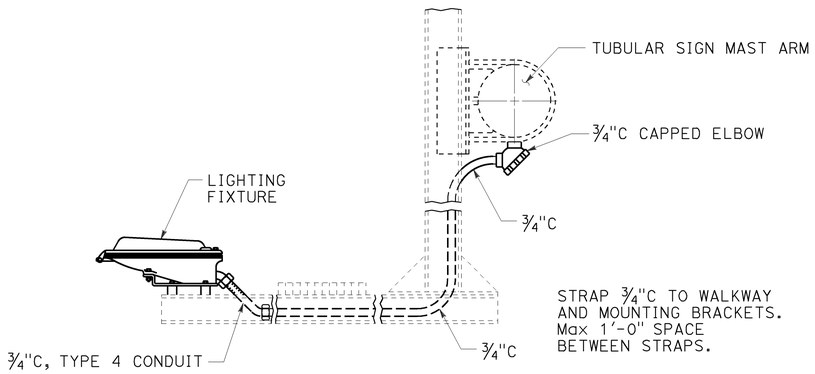

TYPICAL SIGN ILLUMINATION EQUIPMENT INSTALLATION FOR OVERHEAD SIGNS TUBULAR

DETAIL A

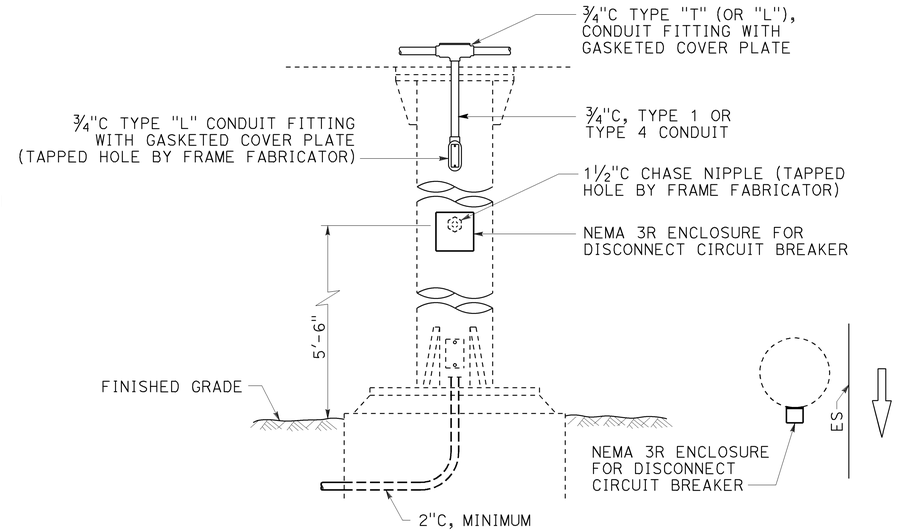

TYPICAL SIGN ILLUMINATION EQUIPMENT INSTALLATION FOR OVERHEAD SIGNS ROUND POST

DETAIL B

NOTES:

1. Type 4 conduit shall be secured to the nearest walkway bracket using one-hole galvanized malleable iron or steel straps and brass machine screws tapped into the bracket.
2. See Overhead Signs Standard Plans for overhead signs and frame juncture details for photoelectric unit installation.
3. Enclosures and straps shall be secured by ⅜" maximum size screws.
4. The Contactor and test switch enclosures shall be readily accessible from the sign walkway.

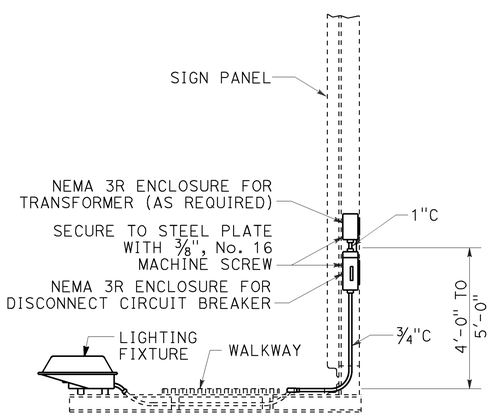

SIDE VIEW

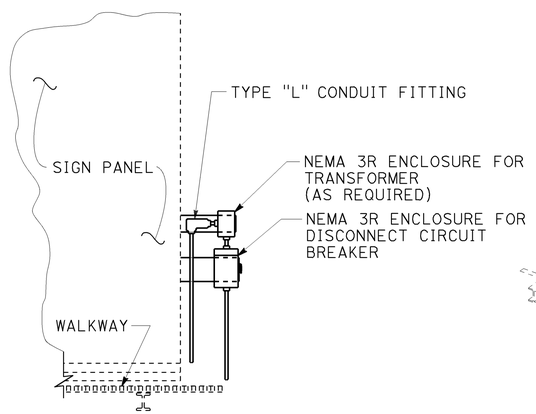

FRONT VIEW

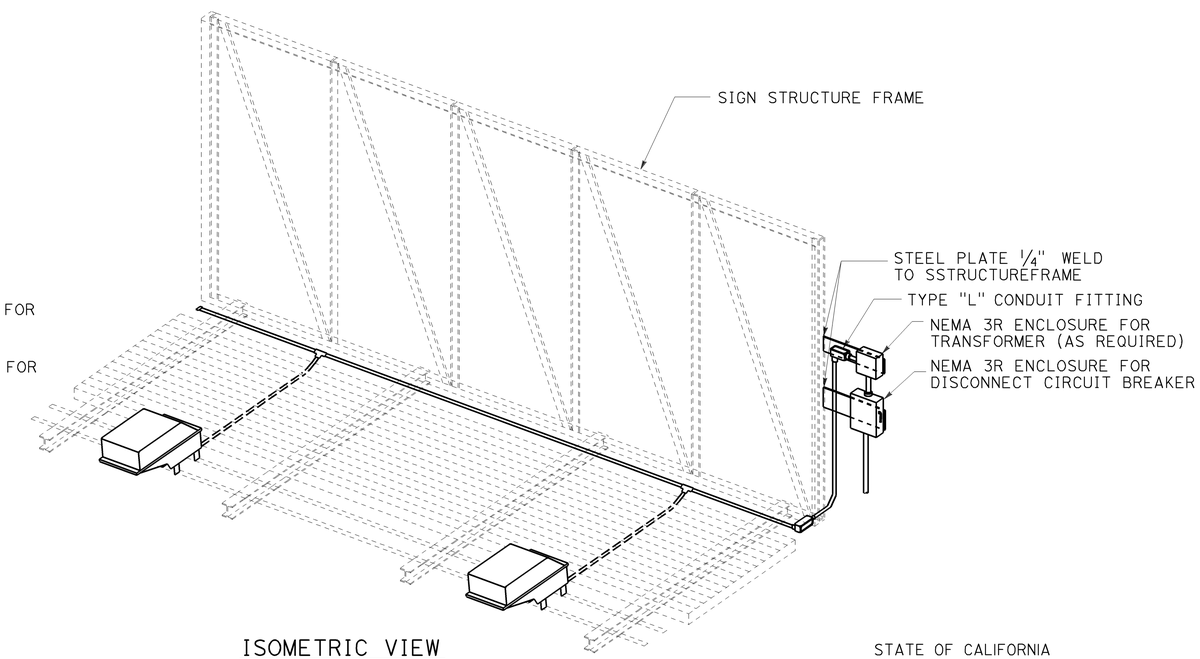

ISOMETRIC VIEW

TYPICAL SIGN ILLUMINATION EQUIPMENT INSTALLATION FOR OVERHEAD SIGNS BRIDGE MOUNTED

DETAIL C

See Note 4

STATE OF CALIFORNIA
DEPARTMENT OF TRANSPORTATION

ELECTRICAL SYSTEMS (SIGN ILLUMINATION EQUIPMENT)

NO SCALE

RSP ES-15C DATED OCTOBER 30, 2015 SUPERSEDES STANDARD PLAN ES-15C DATED MAY 20, 2011 - PAGE 498 OF THE STANDARD PLANS BOOK DATED 2010.

REVISED STANDARD PLAN RSP ES-15C

2010 REVISED STANDARD PLAN RSP ES-15C

8-24-15

Dist	COUNTY	ROUTE	POST MILES TOTAL PROJECT	SHEET No.	TOTAL SHEETS
12	Ora	405	2.6/6.5	411	431

Theresa Gabriel
REGISTERED ELECTRICAL ENGINEER

October 30, 2015
PLANS APPROVAL DATE

REGISTERED PROFESSIONAL ENGINEER
Theresa Aziz Gabriel
No. E15129
Exp. 6-30-16
ELECTRICAL
STATE OF CALIFORNIA

THE STATE OF CALIFORNIA OR ITS OFFICERS OR AGENTS SHALL NOT BE RESPONSIBLE FOR THE ACCURACY OR COMPLETENESS OF SCANNED COPIES OF THIS PLAN SHEET.

TO ACCOMPANY PLANS DATED 06-27-16

2010 REVISED STANDARD PLAN RSP ES-15D

NOTE:

Type SC1A, SC2A, SC3A controls are similar to Types SC1, SC2 and SC controls respectively except test switch and wiring are not required.

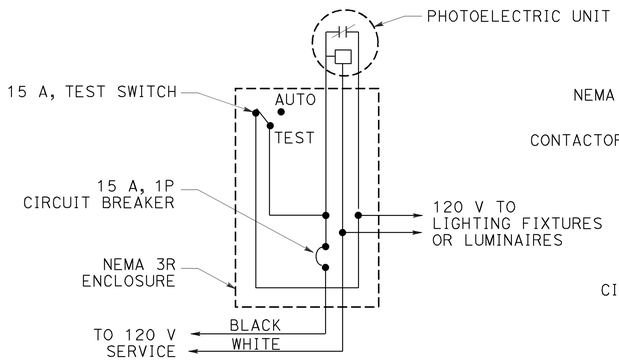

TYPE LC1 CONTROL

For 120 V unswitched circuit with no more than 1000 W load.

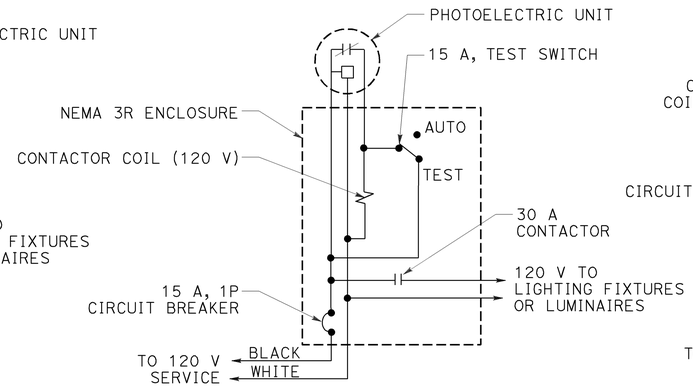

TYPE LC2 CONTROL

For 120 V unswitched circuit

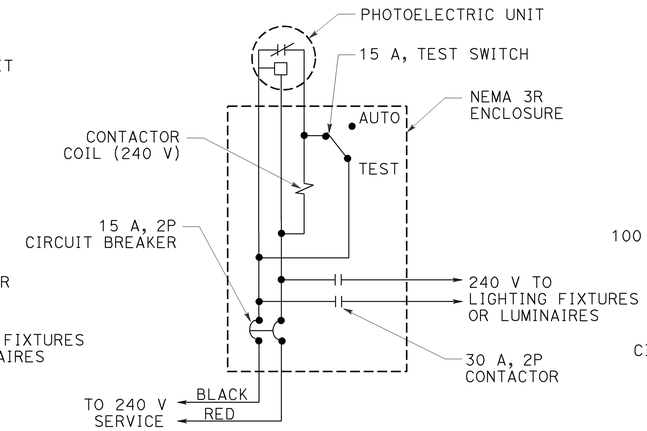

TYPE LC3 CONTROL

For 240 V unswitched circuits

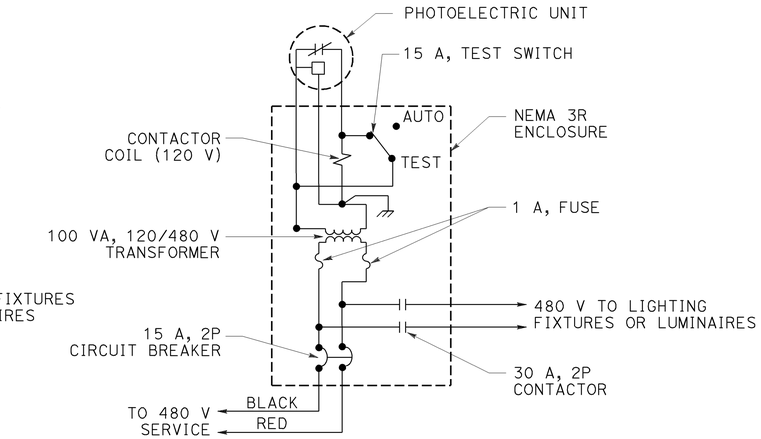

TYPE LC4 CONTROL

For 480 V unswitched circuits

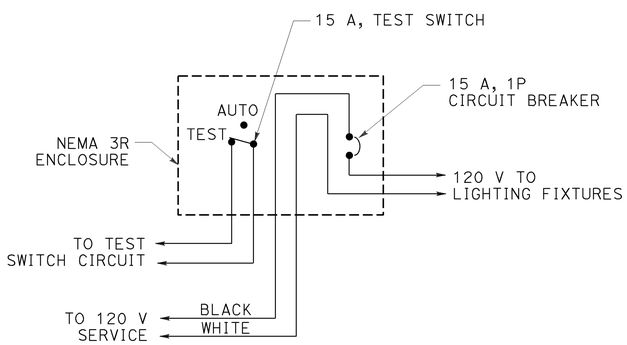

TYPE SC1 CONTROL

For 120 V switched circuit, see Note 1 for Type SC1A

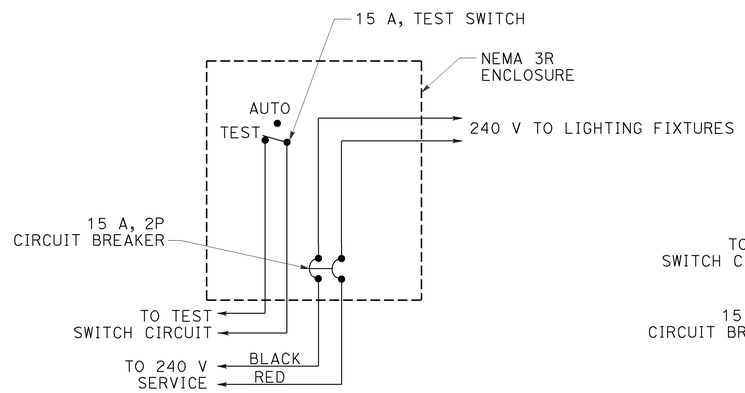

TYPE SC2 CONTROL

For 240 V switched circuit, see Note 1 for Type SC2A

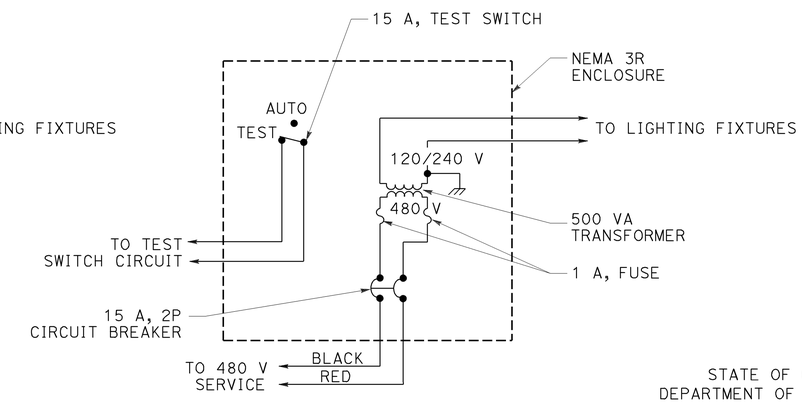

TYPE SC3 CONTROL

For 480 V switched sign circuit, see Note 1 for Type SC3A

STATE OF CALIFORNIA
DEPARTMENT OF TRANSPORTATION

ELECTRICAL SYSTEMS (LIGHTING AND SIGN ILLUMINATION CONTROL)

NO SCALE

RSP ES-15D DATED OCTOBER 30, 2015 SUPERSEDES STANDARD PLAN ES-15D DATED MAY 20, 2011 - PAGE 499 OF THE STANDARD PLANS BOOK DATED 2010.

REVISED STANDARD PLAN RSP ES-15D

8-20-15

Dist	COUNTY	ROUTE	POST MILES TOTAL PROJECT	SHEET No.	TOTAL SHEETS
12	Ora	405	2.6/6.5	412	431

REGISTERED CIVIL ENGINEER

October 30, 2015
PLANS APPROVAL DATE

REGISTERED PROFESSIONAL ENGINEER
Stanley P. Johnson
No. C57793
Exp. 3-31-16
CIVIL
STATE OF CALIFORNIA

THE STATE OF CALIFORNIA OR ITS OFFICERS OR AGENTS SHALL NOT BE RESPONSIBLE FOR THE ACCURACY OR COMPLETENESS OF SCANNED COPIES OF THIS PLAN SHEET.

TO ACCOMPANY PLANS DATED 06-27-16

POLE TYPE	POLE DATA				BASE PLATE DATA				CIDH	
	HEIGHT "h"	Min OD		THICKNESS	"C"	THICKNESS	ANCHOR BOLT SIZE	BC = BOLT CIRCLE	Dia	"d"
		BASE	TOP							
CCTV 25	25′	7⅜"	3¾"	0.1793"	1′-1"	1"	1½" ø x 36"	11½"	2′-6"	7′-0"
CCTV 30	30′	8"			1′-1½"			1′-0"		7′-6"
CCTV 35	35′	8⅝"			1′-2"			1′-1"		8′-0"
CCTV 40	40′	9⅜"			1′-3"			1′-1½"		8′-6"
CCTV 45	45′	10"						1′-2"		

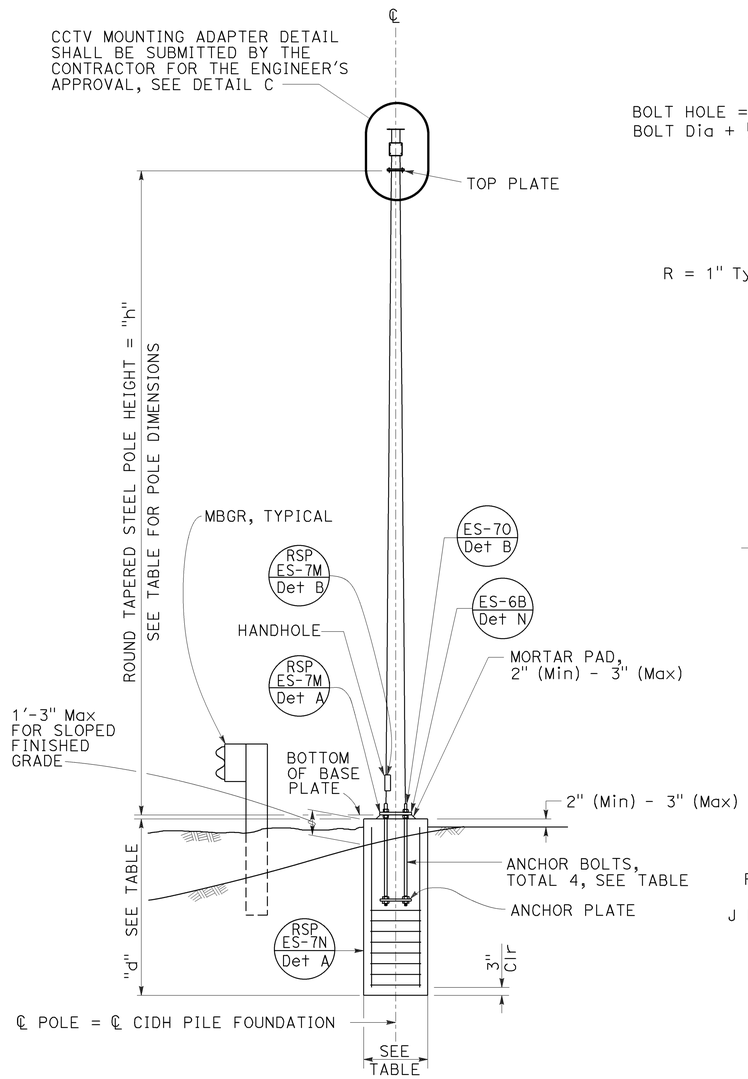

ELEVATION A

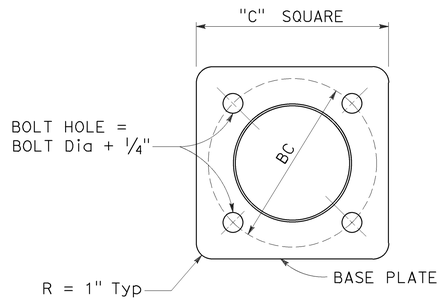

BASE PLATE

DETAIL A

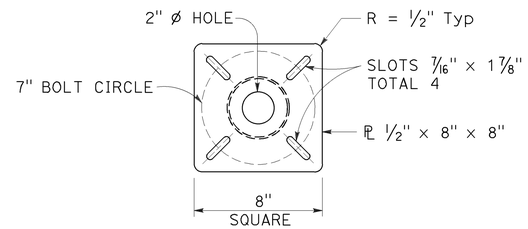

TOP PLATE

DETAIL B

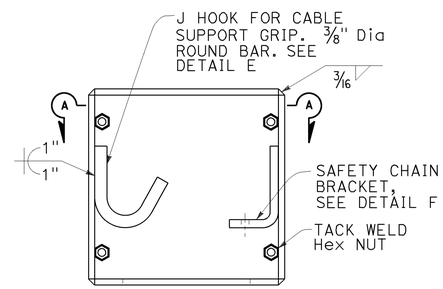

BOX ENCLOSURE

DETAIL D

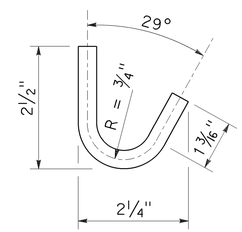

J HOOK

DETAIL E

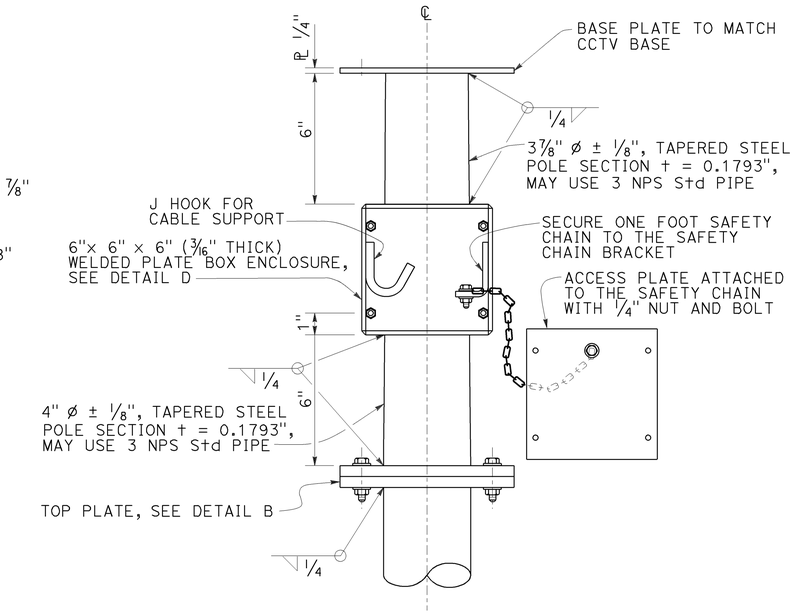

CLOSED CIRCUIT TELEVISION MOUNTING ADAPTER

DETAIL C

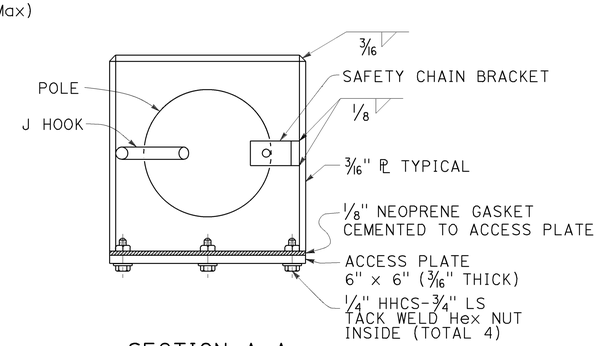

SECTION A-A

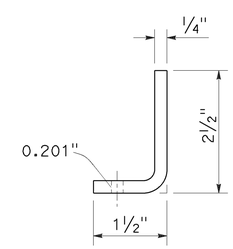

SAFETY CHAIN BRACKET

DETAIL F

NOTES:

1. Verify controlling field dimensions before ordering or fabricating any material.
2. During pole installation, the post shall be raked as necessary with the use of leveling nuts to provide a plumb pole axis.
3. Wind Loadings (3-second gust): 100 mph
4. Unit Stresses (Structural Steel):
   a. fy = 55,000 psi (tapered steel tube and anchor bolts)
   b. fy = 50,000 psi (unless otherwise noted)
5. Unit Stresses (Reinforced Concrete):
   a. f′c = 3,625 psi
   b. fy = 60,000 psi

STATE OF CALIFORNIA
DEPARTMENT OF TRANSPORTATION

ELECTRICAL SYSTEMS (CLOSED CIRCUIT TELEVISION, 25' TO 45' POLE)

NO SCALE

RSP ES-16B DATED OCTOBER 30, 2015 SUPERSEDES STANDARD PLAN ES-16B DATED MAY 20, 2011 - PAGE 501 OF THE STANDARD PLANS BOOK DATED 2010.

REVISED STANDARD PLAN RSP ES-16B

2010 REVISED STANDARD PLAN RSP ES-16B

9-1-15

DIST	COUNTY	ROUTE	POST MILES TOTAL PROJECT	SHEET No.	TOTAL SHEETS
12	Ora	405	2.6/6.5	413	431

REGISTERED CIVIL ENGINEER 06-10-16 DATE

6-27-16
PLANS APPROVAL DATE

REGISTERED PROFESSIONAL ENGINEER Gabriel J. Galo No. 52288 Exp. 12-31-16 CIVIL STATE OF CALIFORNIA

The State of California or its officers or agents shall not be responsible for the accuracy or completeness of scanned copies of this plan sheet.

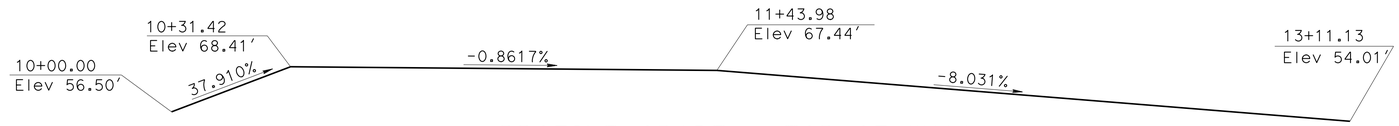

PROFILE GRADE - TOP OF WALL

NO SCALE

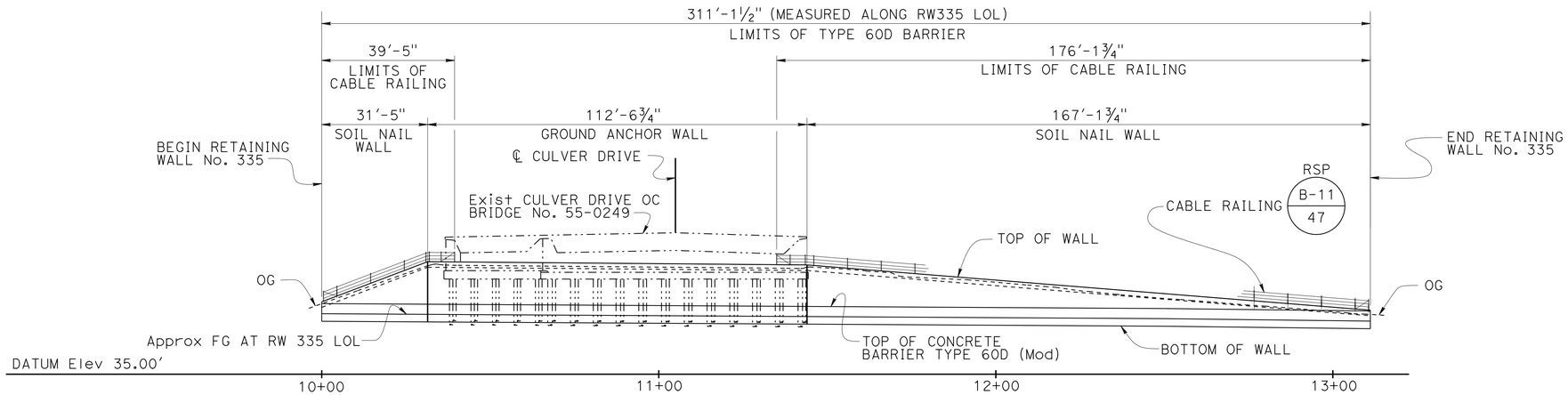

DEVELOPED ELEVATION

1" = 20'-0"

NOTES:

1. For Temporary Railing (Type K), see "ROADWAY PLANS".
2. For Structural Details, see "STRUCTURAL DETAILS No. 1" through "STRUCTURAL DETAILS No. 8" sheets.
3. For Geocomposite Drain and Filter Fabric, see "DRAINAGE DETAILS No. 1, No. 2, and No. 3" sheets.
4. For "TYPICAL SECTION" see "GENERAL PLAN No. 2" sheet.
5. Concrete Surface Texture, (Fractured Rib Triangular Pattern) not shown for clarity.

LEGEND:

Indicates limits of existing Culver Drive OC Slope Paving to be removed. See "ROADWAY PLANS".

Indicates existing structure

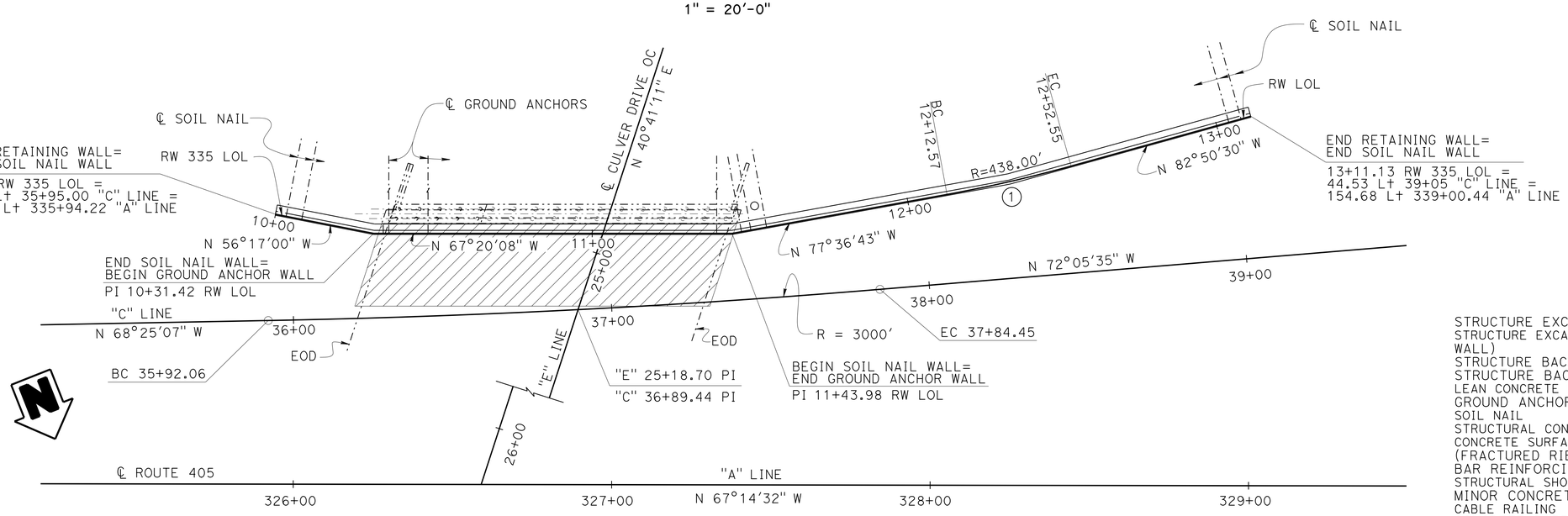

PLAN

1" = 20'-0"

CURVE DATA

(1) R = 438.00'
Δ = 5°13'47" (LT)
T = 20.00'
L = 39.98'

QUANTITIES

STRUCTURE EXCAVATION (SOIL NAIL WALL)	176	CY
STRUCTURE EXCAVATION (GROUND ANCHOR WALL)	240	CY
STRUCTURE BACKFILL (GROUND ANCHOR WALL)	12	CY
STRUCTURE BACKFILL (SOIL NAIL WALL)	20	CY
LEAN CONCRETE BACKFILL	30	CY
GROUND ANCHOR (SUBHORIZONTAL)	27	EA
SOIL NAIL	1,960	LF
STRUCTURAL CONCRETE, FASCIA	118	CY
CONCRETE SURFACE TEXTURE (FRACTURED RIB TRIANGULAR PATTERN)	2,486	SQFT
BAR REINFORCING STEEL (FASCIA)	30,912	LB
STRUCTURAL SHOTCRETE	95	CY
MINOR CONCRETE (GUTTER) (LF)	314	LF
CABLE RAILING	217	LF
CONCRETE BARRIER (TYPE 60D MODIFIED)	312	LF

NOTE:
THE CONTRACTOR MUST VERIFY ALL CONTROLLING FIELD DIMENSIONS BEFORE ORDERING OR FABRICATING ANY MATERIAL.

Jose Higareda
DESIGN ENGINEER

	BY	CHECKED
DESIGN	Gabriel Galo	Fred Feng
DETAILS	Stan Cholda	Fred Feng
QUANTITIES	Gabriel Galo	Fred Feng

LOAD & RESISTANCE FACTOR DESIGN — LIVE LOADING: HL93 W/"LOW-BOY"; PERMIT DESIGN VEHICLE

	BY	CHECKED
LAYOUT	Gabriel Galo	Fred Feng
SPECIFICATIONS	Karen Doll	PLANS AND SPECS COMPARED Karen Doll

ORIGINAL SCALE IN INCHES FOR REDUCED PLANS 0 1 2 3

STATE OF CALIFORNIA
DEPARTMENT OF TRANSPORTATION

DIVISION OF ENGINEERING SERVICES
STRUCTURE DESIGN
DESIGN BRANCH 15

BRIDGE NO. 55E0171
POST MILE 5.62

RETAINING WALL No. 335
GENERAL PLAN No. 1

UNIT: 3604
PROJECT NUMBER & PHASE: 12120000181
CONTRACT NO.: 12-0M3504

DISREGARD PRINTS BEARING EARLIER REVISION DATES

REVISION DATES 09-29-15 03-16-16 03-25-16 03-09-16 SHEET 1 OF 19

USERNAME => s128284 DATE PLOTTED => 09-AUG-2016 TIME PLOTTED => 14:16

STRUCTURES DESIGN GENERAL PLAN SHEET (ENGLISH) (REV.09-01-10)

FILE => 55e0171-a-gp01.dgn

DIST	COUNTY	ROUTE	POST MILES TOTAL PROJECT	SHEET No.	TOTAL SHEETS
12	Ora	405	2.6/6.5	414	431

REGISTERED CIVIL ENGINEER 06-10-16 DATE

6-27-16
PLANS APPROVAL DATE

REGISTERED PROFESSIONAL ENGINEER Gabriel J. Galo No. 52288 Exp. 12-31-16 CIVIL STATE OF CALIFORNIA

The State of California or its officers or agents shall not be responsible for the accuracy or completeness of scanned copies of this plan sheet.

LEGEND:

-·-·-·- Indicates existing structure

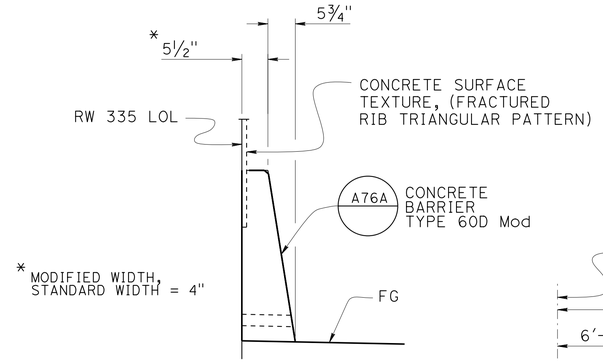

DETAIL X

¾" = 1'-0"

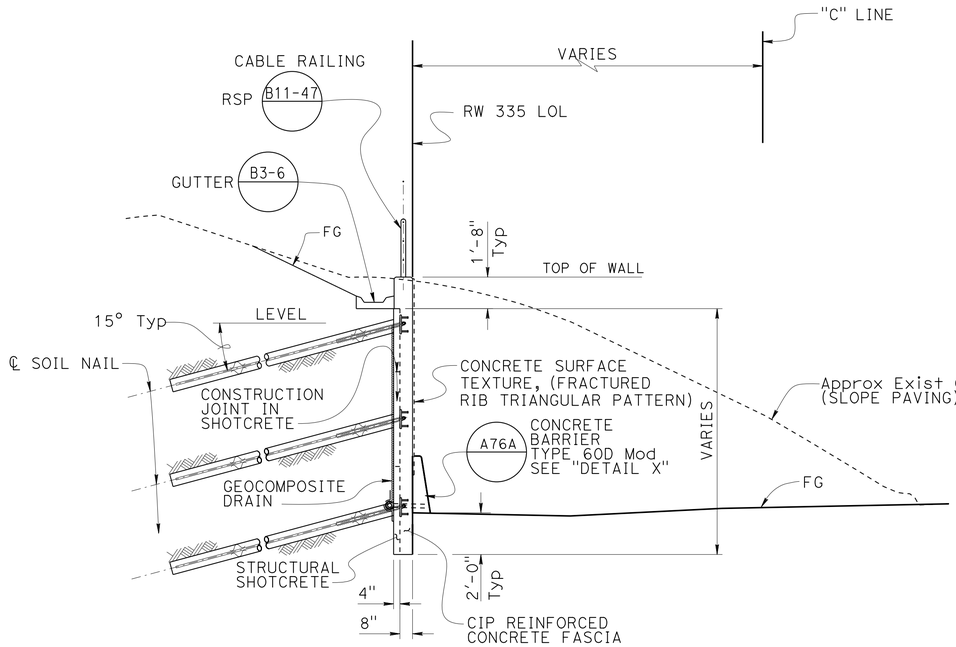

SOIL NAIL WALL

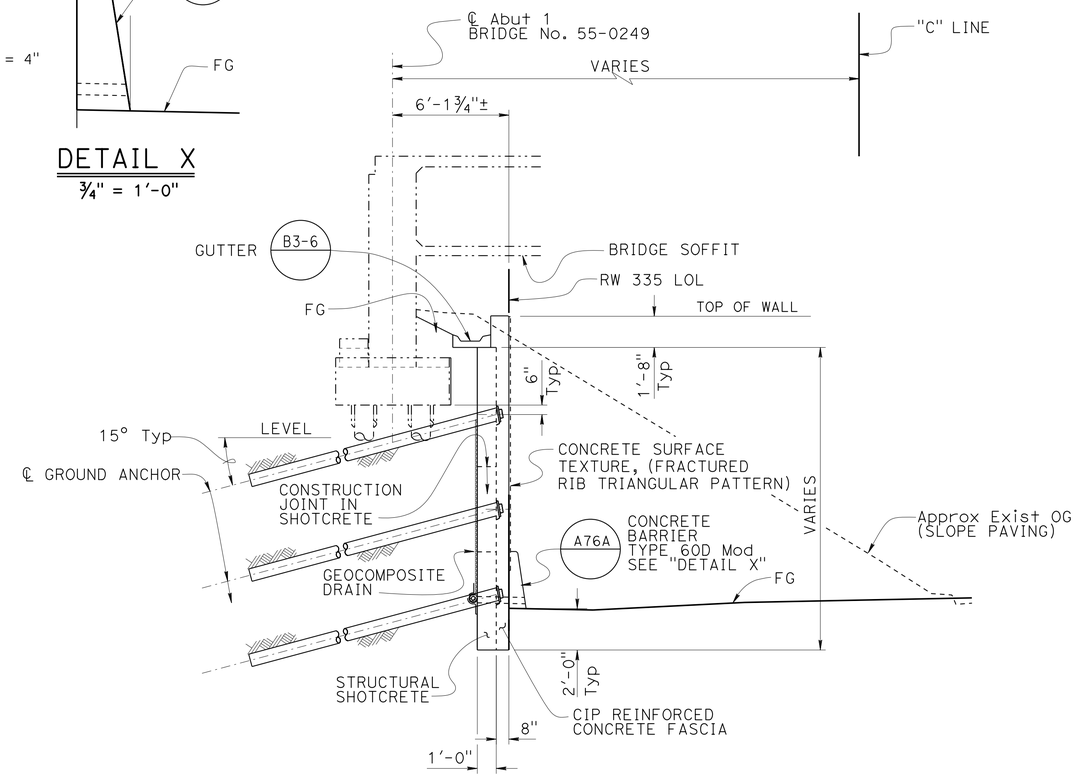

GROUND ANCHOR WALL

TYPICAL SECTION

¼" = 1'-0"

NOTES:

1. For Slope Paving Removal, see "ROADWAY PLANS".
2. Bottom of walls shall be placed against undisturbed material.
3. For Geocomposite Drain, see "DRAINAGE DETAILS No. 1", "DRAINAGE DETAILS No. 2" and "DRAINAGE DETAILS No. 3" sheets.
4. For Soil Nail locations and elevations, see "TABLE No. 1" on "STRUCTURAL DETAILS No. 1" sheet; "TABLE No. 3" on "STRUCTURAL DETAILS No. 7" sheet.
5. Concrete Surface Texture, (Fractured Rib Triangular Pattern) not shown for clarity.
6. For Ground Anchor locations and elevations, see "STRUCTURAL DETAILS No. 3" and "STRUCTURAL DETAILS No. 4" sheets.

NOTE:
THE CONTRACTOR MUST VERIFY ALL CONTROLLING FIELD DIMENSIONS BEFORE ORDERING OR FABRICATING ANY MATERIAL.

DESIGN	BY Gabriel Galo	CHECKED Fred Feng	LOAD & RESISTANCE FACTOR DESIGN	LIVE LOADING: HL93 W/"LOW-BOY"; PERMIT DESIGN VEHICLE
DETAILS	BY Stan Cholda	CHECKED Fred Feng	LAYOUT BY Gabriel Galo	CHECKED Fred Feng
QUANTITIES	BY Gabriel Galo	CHECKED Fred Feng	SPECIFICATIONS BY Karen Doll	PLANS AND SPECS COMPARED Karen Doll

Jose Higareda
DESIGN ENGINEER

ORIGINAL SCALE IN INCHES FOR REDUCED PLANS 0 1 2 3

STATE OF CALIFORNIA
DEPARTMENT OF TRANSPORTATION

DIVISION OF ENGINEERING SERVICES
STRUCTURE DESIGN
DESIGN BRANCH 15

BRIDGE NO. 55E0171
POST MILE 5.62

RETAINING WALL No. 335
GENERAL PLAN No. 2

UNIT: 3604
PROJECT NUMBER & PHASE: 12120000181
CONTRACT NO.: 12-0M3504

DISREGARD PRINTS BEARING EARLIER REVISION DATES

REVISION DATES: 09-29-15 02-29-16 03-25-16 2-22-16

SHEET 2 OF 19

STRUCTURES DESIGN GENERAL PLAN SHEET (ENGLISH) (REV.09-01-10)

FILE => 55e0171-a-gp02.dgn

USERNAME => s128284 DATE PLOTTED => 09-AUG-2016 TIME PLOTTED => 14:16

DIST	COUNTY	ROUTE	POST MILES TOTAL PROJECT	SHEET No.	TOTAL SHEETS
12	Ora	405	2.6/6.5	415	431

REGISTERED CIVIL ENGINEER 06-10-16 DATE

6-27-16
PLANS APPROVAL DATE

REGISTERED PROFESSIONAL ENGINEER Gabriel J. Galo No. 52288 Exp. 12-31-16 CIVIL STATE OF CALIFORNIA

The State of California or its officers or agents shall not be responsible for the accuracy or completeness of scanned copies of this plan sheet.

LEGEND:

Indicates Structure Excavation (Ground Anchor Wall)
Indicates Structure Excavation (Soil Nail Wall)
Indicates Structure Backfill (Ground Anchor Wall)
Indicates Structure Backfill (Soil Nail Wall)

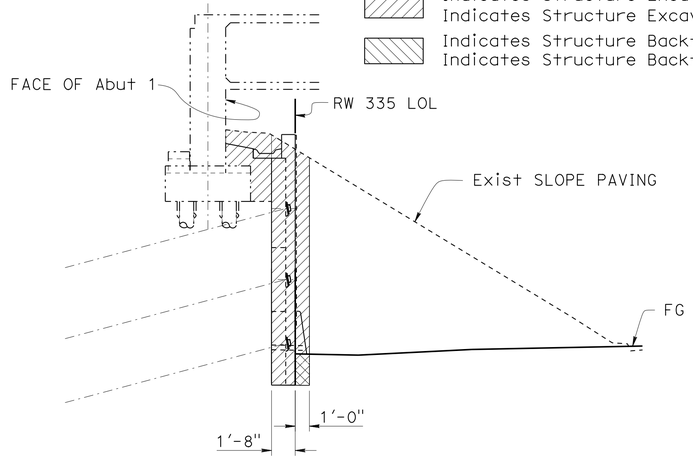

TYPICAL SECTION - GROUND ANCHOR WALL

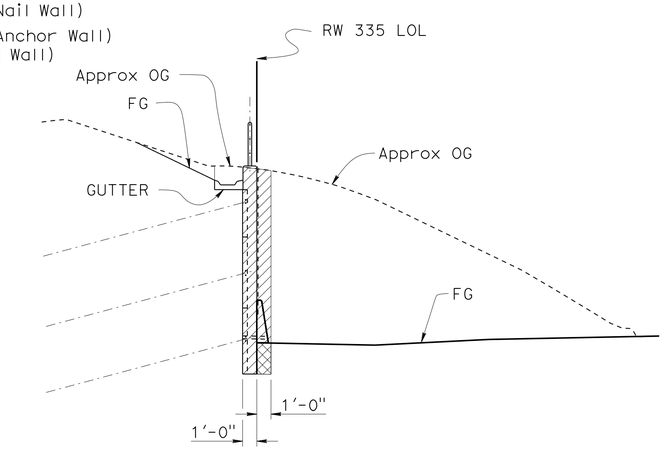

TYPICAL SECTION - SOIL NAIL WALL

LIMITS FOR STRUCTURE EXCAVATION AND BACKFILL

NO SCALE

INDEX TO PLANS

SHEET No.	TITLE
1	GENERAL PLAN No.1
2	GENERAL PLAN No.2
3	INDEX TO PLANS
4	FOUNDATION PLAN
5	STRUCTURAL DETAILS No.1
6	STRUCTURAL DETAILS No.2
7	STRUCTURAL DETAILS No.3
8	STRUCTURAL DETAILS No.4
9	STRUCTURAL DETAILS No.5
10	STRUCTURAL DETAILS No.6
11	STRUCTURAL DETAILS No.7
12	STRUCTURAL DETAILS No.8
13	SUB HORIZONTAL GROUND ANCHOR DETAILS
14	DRAINAGE DETAILS No.1
15	DRAINAGE DETAILS No.2
16	DRAINAGE DETAILS No.3
17	ARCHITECTURAL DETAILS No. 1
18	ARCHITECTURAL DETAILS No. 2
19	LOG OF TEST BORINGS

STANDARD PLANS DATED 2010

	A10A	ACRONYMS AND ABBREVIATIONS (A-L)
RSP	A10B	ACRONYMS AND ABBREVIATIONS (M-Z)
	A76A	CONCRETE BARRIER TYPE 60
	A78I	THRIE BEAM BARRIER CONNECTION TO CONCRETE BARRIER
	B0-3	BRIDGE DETAILS
	B3-6	RETAINING WALL DETAILS No. 2
RSP	B11-47	CABLE RAILING

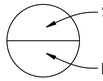

GENERAL NOTES - SOIL NAIL WALL

DESIGN:
Federal Highway Administration Publication Geotechnical Engineering Circular No. 7
Soil Nail Walls, Publication No. FHWA-IF-03-017

LIVE LOADING:
No Live Loading

REINFORCED CONCRETE:
fy = 60 ksi (Yield Strength of Reinforcement)
f'c = 3.6 ksi (Compressive Strength at 28 days)
n = 8

STRUCTURAL SHOTCRETE:
f'c = 3.6 ksi
fy = 65 ksi (plain welded wire reinforcement)
fy = 60 ksi (bar reinforcement)

STRUCTURAL STEEL (BEARING PLATES):
fy = 50 ksi

STUDS:
fy = 55 ksi

SOIL NAILS:
fy = 75 ksi

SOIL PARAMETERS:
γ = 120 pcf
Φ = 32°
C = 0

GROUT:
f'c = 3000 psi at 28 Days

SEISMIC LOADING:
Soil Profile: Soil Shearwave velocity $V_{30} \approx 886$ ft/sec
(Average shear velocity in top 100 ft of soil)

Moment Magnitude: MMax = 7.0±0.25

Peak Ground Acceleration: 0.63g.

kh = 0.2

NOTES: 1. For GENERAL NOTES (Ground Anchors):
See "SUB HORIZONTAL GROUND ANCHOR DETAILS" sheet.

2. For Lean Concrete Backfill, see "STRUCTURAL DETAILS No. 4" sheet.

SOIL NAIL WALL DESIGN TABLE

Wall Zone	RW 335 LOL	Minimum Nail Embedment Length (ft)	Maximum Nail Spacing Vertical (ft)	Maximum Nail Spacing Horizontal (ft)	Pullout Resistance Q_d (lb/ft)	Minimum Threaded Bar Size	Minimum Allowable Facing Resistance (Static/Seismic)
1	10+00.00 to 10+31.42	20	5	5	2,500	#8	(28/38) kips
2	11+43.98 to 13+11.13	20	5	5	2,500	#8	(28/38) kips

NOTE:
THE CONTRACTOR MUST VERIFY ALL CONTROLLING FIELD DIMENSIONS BEFORE ORDERING OR FABRICATING ANY MATERIAL.

	BY	CHECKED
DESIGN	Gabriel Galo	Fred Feng
DETAILS	Stan Cholda	Fred Feng
QUANTITIES	Gabriel Galo	Fred Feng

STATE OF CALIFORNIA
DEPARTMENT OF TRANSPORTATION

DIVISION OF ENGINEERING SERVICES
STRUCTURE DESIGN
DESIGN BRANCH 15

BRIDGE NO. 55E0171
POST MILE 5.62

RETAINING WALL No. 335
INDEX TO PLANS

STRUCTURES DESIGN DETAIL SHEET (ENGLISH) (REV. 09-01-10)

ORIGINAL SCALE IN INCHES FOR REDUCED PLANS 0 1 2 3

UNIT: 3604
PROJECT NUMBER & PHASE: 12120000181
CONTRACT NO.: 12-0M3504

DISREGARD PRINTS BEARING EARLIER REVISION DATES

REVISION DATES: 05-07-15 01-05-16 02-22-16 03-18-16

SHEET 3 OF 19

FILE => 55e0171-b-itp.dgn

USERNAME => s128284 DATE PLOTTED => 09-AUG-2016 TIME PLOTTED => 14:16

DIST	COUNTY	ROUTE	POST MILES TOTAL PROJECT	SHEET No.	TOTAL SHEETS
12	Ora	405	2.6/6.5	416	431

REGISTERED CIVIL ENGINEER — DATE 06-10-16

6-27-16
PLANS APPROVAL DATE

REGISTERED PROFESSIONAL ENGINEER — Gabriel J. Galo — No. 52288 — Exp. 12-31-16 — CIVIL — STATE OF CALIFORNIA

The State of California or its officers or agents shall not be responsible for the accuracy or completeness of scanned copies of this plan sheet.

(1) Sta 26+17.06, "E" LINE, ℄ CULVER DR. =
Sta 336+59.02, "A" LINE, ℄ ROUTE 405

(2) Sta 25+18.70, "E" LINE, ℄ CULVER DR. =
Sta 336+89.43, "C" LINE, SB RTE.405 ON-RAMP

(3) Sta 24+93.52, "E" LINE, ℄ CULVER DR. =
Sta 1+03.35, "C-RWLOL" LINE, RW-335

BRIDGE LOCATION (Br.#55-0249)

(A) 59.13 Ft Rt ℄ Culver Dr, "E" Line, Sta 25+05.51, Elev= 75.68
(B) 30.88 Ft Lt ℄ Culver Dr, "E" Line, Sta 24+76.21, Elev= 75.78

CURVE DATA				
No.	R	Δ	T	L
(A)	3000.00′	03°40′28"	96.23′	192.39′
(B)	158.00′	244°12′19"	251.85′	673.43′
(C)	438.00′	05°13′47"	20.00′	39.98′

PRHV-552
N 2 190 588.337
E 6 083 115.468
Elev= 62.61

BEG. RW-335, Sta 10+0.00 =
123.40′ Lt, "A" LINE, Sta 335+94.22

END RW-335, Sta 3+11.13 =
154.68′ Lt, "A" LINE, Sta 339+00.44

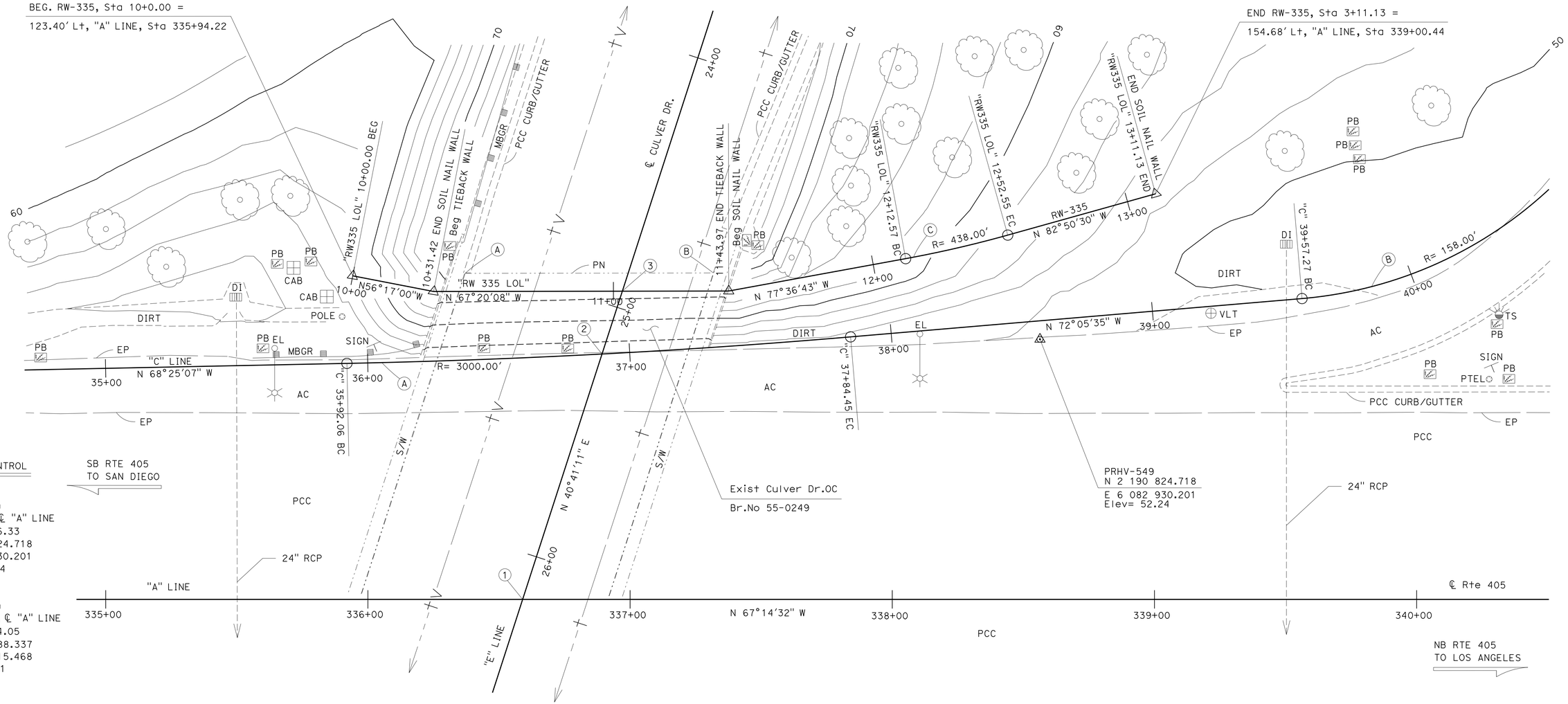

SURVEY CONTROL

PRHV-549
FND PK+Tin
99.21′ Lt, ℄ "A" LINE
Sta 338+56.33
N 2 190 824.718
E 6 082 930.201
Elev= 52.24

PRHV-552
FND PK+Tin
245.52′ Lt, ℄ "A" LINE
Sta 335+94.05
N 2 190 588.337
E 6 083 115.468
Elev= 62.61

NOTE:
THE CONTRACTOR MUST VERIFY ALL CONTROLLING FIELD DIMENSIONS BEFORE ORDERING OR FABRICATING ANY MATERIAL.

NOTES:
UNDERGROUND UTILITIES AS SHOWN ARE APPROXIMATE, SEE UTILITY PLANS FOR MORE INFORMATION

PRELIMINARY INVESTIGATION SECTION					
SCALE 1"=20′	VERT.DATUM NAVD88	PHOTOGRAMMETRY AS OF: X			
	HORZ.DATUM NAD83 (1991.35)	SURVEYED	BY District 12	CHECKED	BY X
ALIGNMENT TIES Dist. Traverse Sheet		DRAFTED	BY V.PHAM 6/2015	CHECKED	BY E.VIAJAR 6/2015

	BY	CHECKED
DESIGN	Gabriel Galo	Fred Feng
DETAILS	Stan Cholda	Fred Feng
QUANTITIES	Gabriel Galo	Fred Feng

STATE OF CALIFORNIA
DEPARTMENT OF TRANSPORTATION

DIVISION OF ENGINEERING SERVICES
STRUCTURE DESIGN
DESIGN BRANCH 15

BRIDGE NO. 55E0171
POST MILE 5.62

RETAINING WALL No. 335
FOUNDATION PLAN

STRUCTURES DESIGN DETAIL SHEET (ENGLISH) (REV. 09-01-10)

ORIGINAL SCALE IN INCHES FOR REDUCED PLANS 0 1 2 3

UNIT: 3604
PROJECT NUMBER & PHASE: 12120000181
CONTRACT NO.: 12-0M3504

DISREGARD PRINTS BEARING EARLIER REVISION DATES

REVISION DATES: 6/30/15 03/25/16 09/27/15 12-22-15

SHEET 4 OF 19

FILE => 55e0171-e-fp.dgn

USERNAME => 6128284 DATE PLOTTED => 09-AUG-2016 TIME PLOTTED => 14:16

DIST	COUNTY	ROUTE	POST MILES TOTAL PROJECT	SHEET No.	TOTAL SHEETS
12	Ora	405	2.6/6.5	417	431

REGISTERED CIVIL ENGINEER — DATE 06-10-16

6-27-16
PLANS APPROVAL DATE

REGISTERED PROFESSIONAL ENGINEER — Gabriel J. Galo — No. 52288 — Exp. 12-31-16 — CIVIL — STATE OF CALIFORNIA

The State of California or its officers or agents shall not be responsible for the accuracy or completeness of scanned copies of this plan sheet.

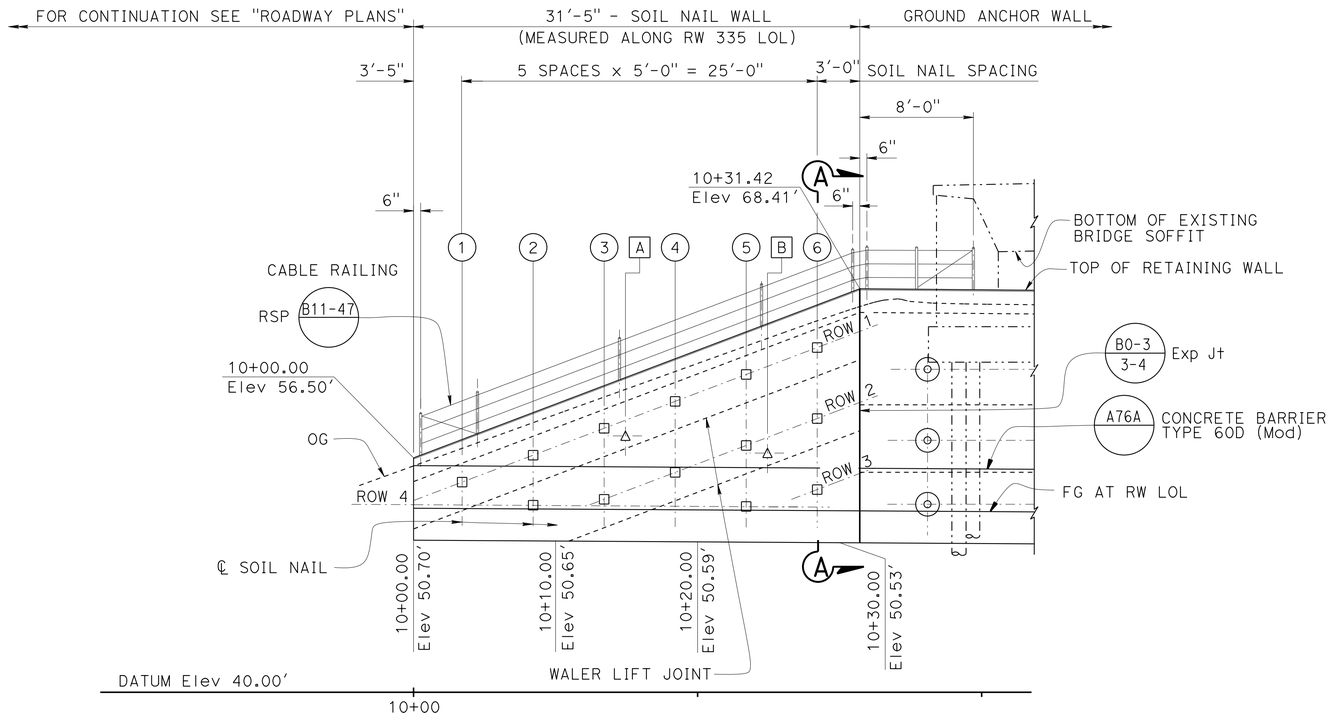

DEVELOPED ELEVATION

3/16" = 1'-0"

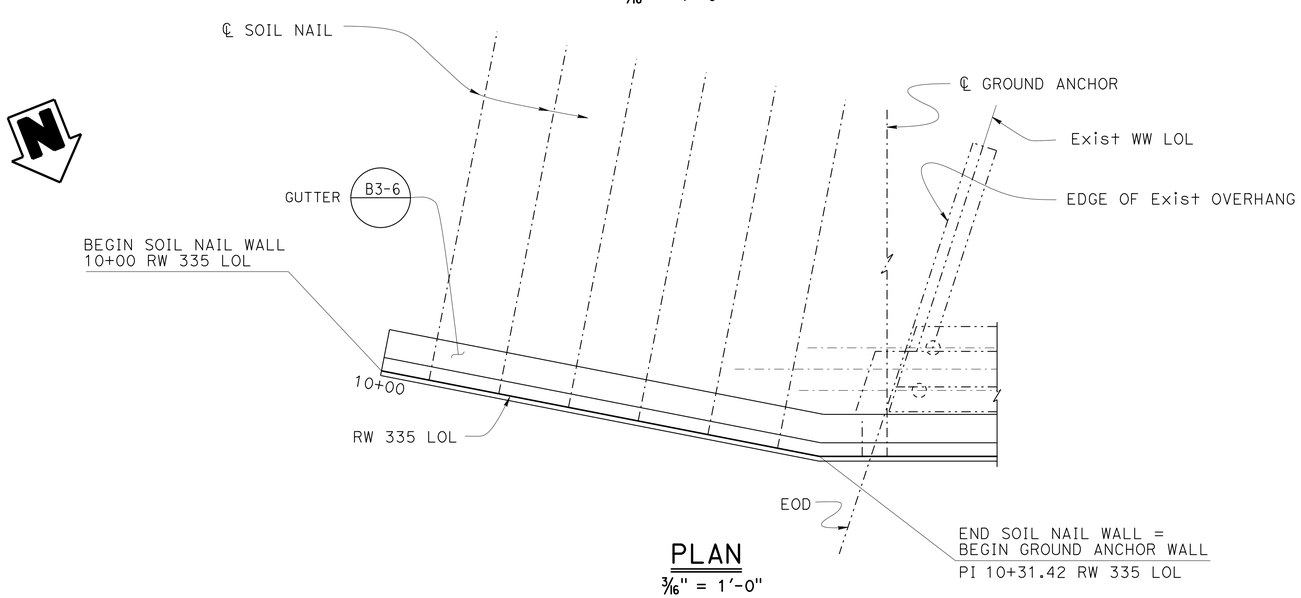

PLAN

3/16" = 1'-0"

NOTE:
THE CONTRACTOR MUST VERIFY ALL CONTROLLING FIELD DIMENSIONS BEFORE ORDERING OR FABRICATING ANY MATERIAL.

TABLE No. 1

LOCATION	ELEVATION (Soil Nail)					
	1	2	3	4	5	6
Row 1	54.794	56.689	58.584	60.479	62.374	64.269
Row 2			53.584	55.479	57.374	59.269
Row 3						54.269
Row 4		53.155			53.067	

	ELEVATION (Proof Test Soil Nail)	
LOCATION	A	B
Sta	10+14.92	10+24.92
ELEVATION	58.048	56.838

NOTES:

1. For Soil Nail elevations, see "TABLE No. 1"
2. Soil Nails to be installed normal to "RW 335 LOL" Line.
3. For "SECTION A-A", see "STRUCTURAL DETAILS No. 2" sheet.
4. Concrete Surface Texture, (Fractured Rib Triangular Pattern) not shown for clarity.
5. For Drainage Details, see "DRAINAGE DETAILS No. 1" AND "DRAINAGE DETAILS No. 2" sheets.

LEGEND:

- ⊙ - Ground Anchor Assembly
- □ - Soil Nail
- △ - Proof Test Soil Nail
- —··—·— Indicates existing structure

	BY	CHECKED
DESIGN	Gabriel Galo	Fred Feng
DETAILS	Stan Cholda	Fred Feng
QUANTITIES	Gabriel Galo	Fred Feng

STATE OF CALIFORNIA
DEPARTMENT OF TRANSPORTATION

DIVISION OF ENGINEERING SERVICES
STRUCTURE DESIGN
DESIGN BRANCH 15

BRIDGE NO. 55E0171
POST MILE 5.62

RETAINING WALL No. 335
STRUCTURAL DETAILS No. 1

STRUCTURES DESIGN DETAIL SHEET (ENGLISH) (REV. 09-01-10)

ORIGINAL SCALE IN INCHES FOR REDUCED PLANS 0 1 2 3

UNIT: 3604
PROJECT NUMBER & PHASE: 12120000181
CONTRACT NO.: 12-0M3504

DISREGARD PRINTS BEARING EARLIER REVISION DATES

REVISION DATES: 05-07-15 02-17-16 02-22-16 03-25-16

SHEET 5 OF 19

FILE => 55e0171-f-sdet01.dgn

USERNAME => s128284 DATE PLOTTED => 09-AUG-2016 TIME PLOTTED => 14:16

DIST	COUNTY	ROUTE	POST MILES TOTAL PROJECT	SHEET No.	TOTAL SHEETS
12	Ora	405	2.6/6.5	418	431

REGISTERED CIVIL ENGINEER 06-10-16 DATE

6-27-16
PLANS APPROVAL DATE

REGISTERED PROFESSIONAL ENGINEER
Gabriel J. Galo
No. 52288
Exp. 12-31-16
CIVIL
STATE OF CALIFORNIA

The State of California or its officers or agents shall not be responsible for the accuracy or completeness of scanned copies of this plan sheet.

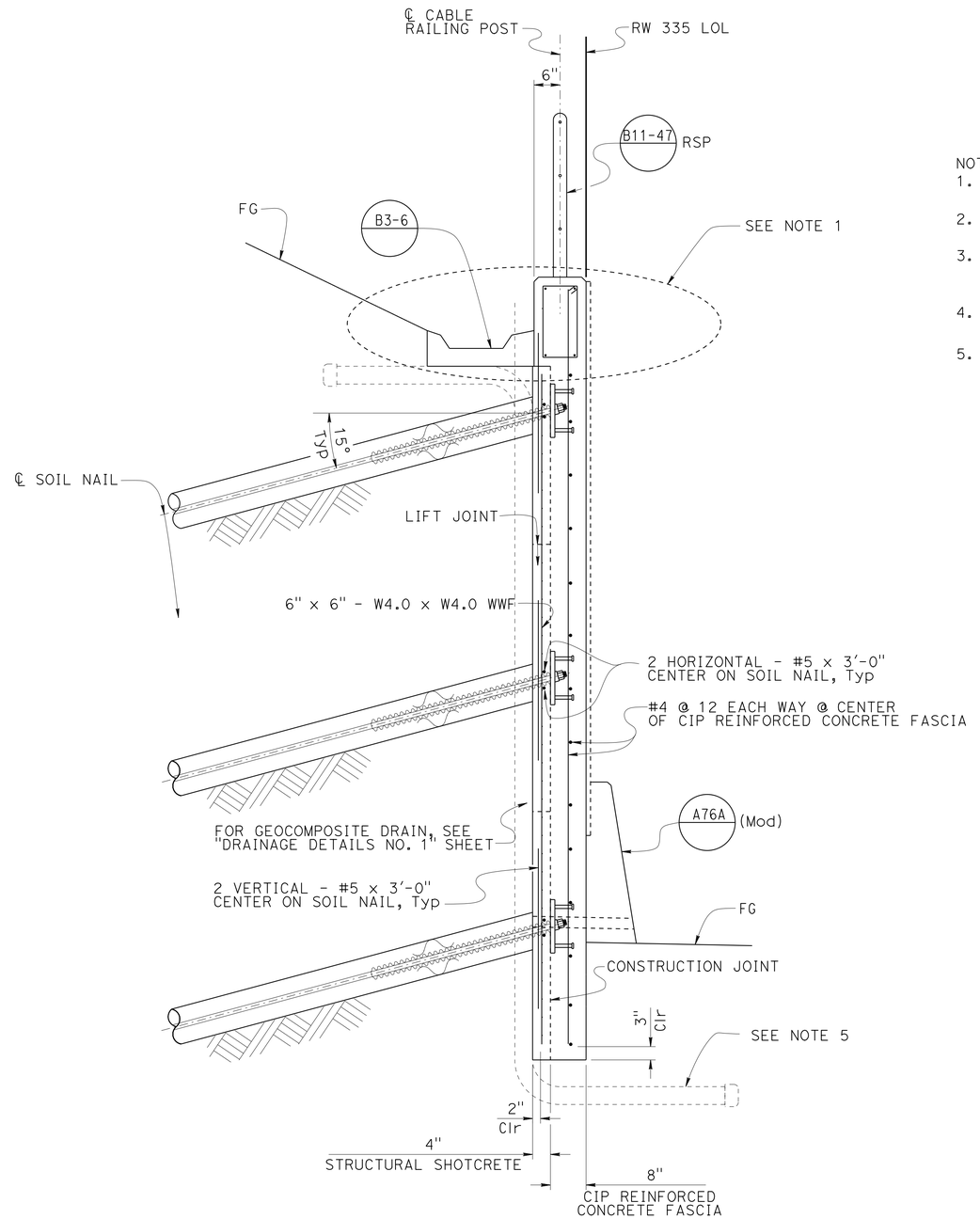

SECTION A-A

3/4" = 1'-0"

NOTES:

1. For details of top of wall , see "SECTION B-B" on "STRUCTURAL DETAILS No. 4" sheet.
2. Bottom of Wall shall be placed against undisturbed material.
3. For additional Soil Nail details, see "STRUCTURAL DETAILS No. 1", "STRUCTURAL DETAILS No. 5" through "STRUCTURAL DETAILS No. 8" sheets.
4. For Concrete Surface Texture details, see "ARCHITECTURAL DETAILS No.1" and "ARCHITECTURAL DETAILS No. 2" sheets.
5. Electrical Conduit to be placed in stages prior to shotcrete. See "ROADWAY PLANS".

NOTE:
THE CONTRACTOR MUST VERIFY ALL CONTROLLING FIELD DIMENSIONS BEFORE ORDERING OR FABRICATING ANY MATERIAL.

	BY	CHECKED
DESIGN	Gabriel Galo	Fred Feng
DETAILS	Stan Cholda	Fred Feng
QUANTITIES	Gabriel Galo	Fred Feng

STATE OF CALIFORNIA
DEPARTMENT OF TRANSPORTATION

DIVISION OF ENGINEERING SERVICES
STRUCTURE DESIGN
DESIGN BRANCH 15

BRIDGE NO. 55E0171
POST MILE 5.62

RETAINING WALL No. 335
STRUCTURAL DETAILS No. 2

STRUCTURES DESIGN DETAIL SHEET (ENGLISH) (REV. 09-01-10)

ORIGINAL SCALE IN INCHES FOR REDUCED PLANS 0 1 2 3

UNIT: 3604
PROJECT NUMBER & PHASE: 12120000181
CONTRACT NO.: 12-0M3504

DISREGARD PRINTS BEARING EARLIER REVISION DATES

REVISION DATES: 12-29-15 02-26-16 03-25-16 02-17-16

SHEET 6 OF 19

FILE => 55e0171-f-sdet02.dgn

USERNAME => s128284 DATE PLOTTED => 09-AUG-2016 TIME PLOTTED => 14:16

DIST	COUNTY	ROUTE	POST MILES TOTAL PROJECT	SHEET No.	TOTAL SHEETS
12	Ora	405	2.6/6.5	419	431

REGISTERED CIVIL ENGINEER 06-10-16 DATE

6-27-16
PLANS APPROVAL DATE

REGISTERED PROFESSIONAL ENGINEER Gabriel J. Galo No. 52288 Exp. 12-31-16 CIVIL STATE OF CALIFORNIA

The State of California or its officers or agents shall not be responsible for the accuracy or completeness of scanned copies of this plan sheet.

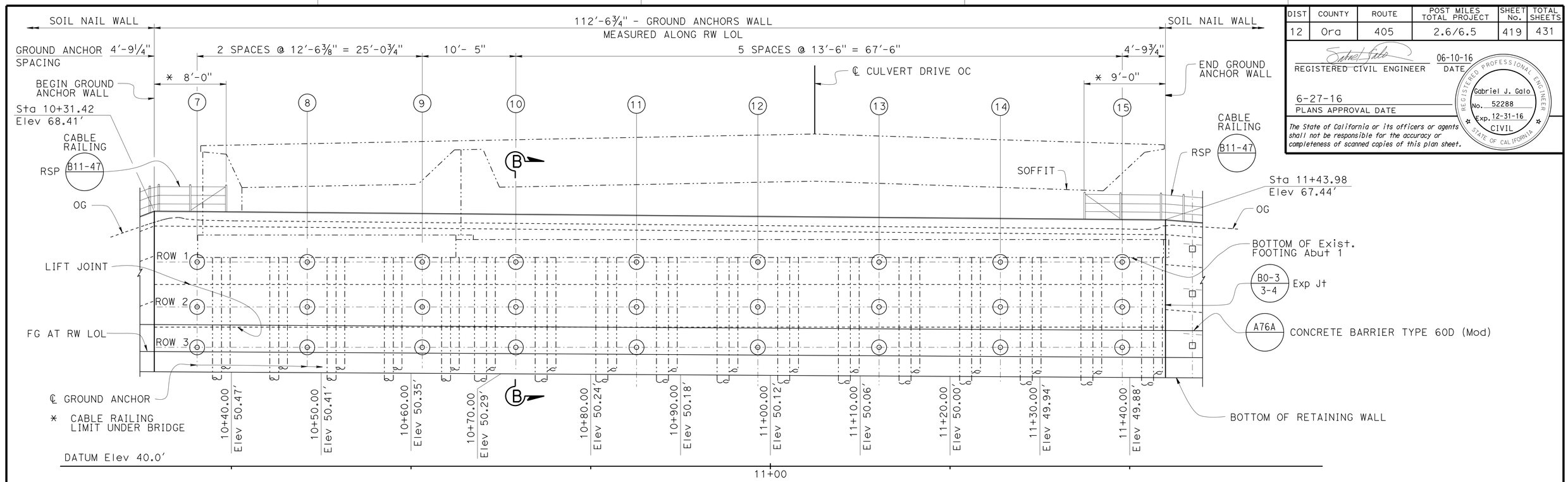

ELEVATION

3/16" = 1'-0"

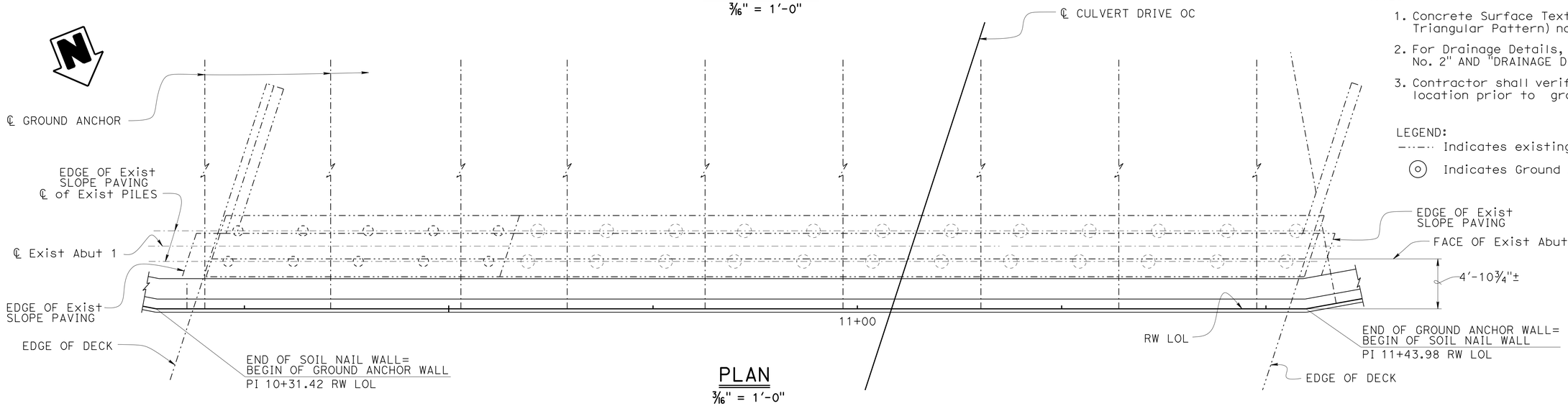

PLAN

3/16" = 1'-0"

NOTES:

1. Concrete Surface Texture, (Fractured Rib Triangular Pattern) not shown for clarity.
2. For Drainage Details, see "DRAINAGE DETAILS No. 2" AND "DRAINAGE DETAILS No. 3" sheets.
3. Contractor shall verify all existing piles location prior to ground anchor construction.

LEGEND:

—·—·— Indicates existing structure

(o) Indicates Ground Anchor Assembly

NOTE:
THE CONTRACTOR MUST VERIFY ALL CONTROLLING FIELD DIMENSIONS BEFORE ORDERING OR FABRICATING ANY MATERIAL.

	BY	CHECKED
DESIGN	Gabriel Galo	Fred Feng
DETAILS	Stan Cholda	Fred Feng
QUANTITIES	Gabriel Galo	Fred Feng

STATE OF CALIFORNIA
DEPARTMENT OF TRANSPORTATION

DIVISION OF ENGINEERING SERVICES
STRUCTURE DESIGN
DESIGN BRANCH 15

BRIDGE NO. 55E0171
POST MILE 5.62

RETAINING WALL No. 335
STRUCTURAL DETAILS No. 3

STRUCTURES DESIGN DETAIL SHEET (ENGLISH) (REV. 09-01-10)

ORIGINAL SCALE IN INCHES FOR REDUCED PLANS 0 1 2 3

UNIT: 3604
PROJECT NUMBER & PHASE: 12120000181
CONTRACT NO.: 12-0M3504

DISREGARD PRINTS BEARING EARLIER REVISION DATES

REVISION DATES: 09-25-15 02-22-16 03-25-16 2-12-16

SHEET 7 OF 19

FILE => 55e0171-f-sdet03.dgn

USERNAME => s128284 DATE PLOTTED => 09-AUG-2016 TIME PLOTTED => 14:16

DIST	COUNTY	ROUTE	POST MILES TOTAL PROJECT	SHEET No.	TOTAL SHEETS
12	Ora	405	2.6/6.5	420	431

REGISTERED CIVIL ENGINEER 06-10-16 DATE

6-27-16
PLANS APPROVAL DATE

REGISTERED PROFESSIONAL ENGINEER Gabriel J. Galo No. 52288 Exp. 12-31-16 CIVIL STATE OF CALIFORNIA

The State of California or its officers or agents shall not be responsible for the accuracy or completeness of scanned copies of this plan sheet.

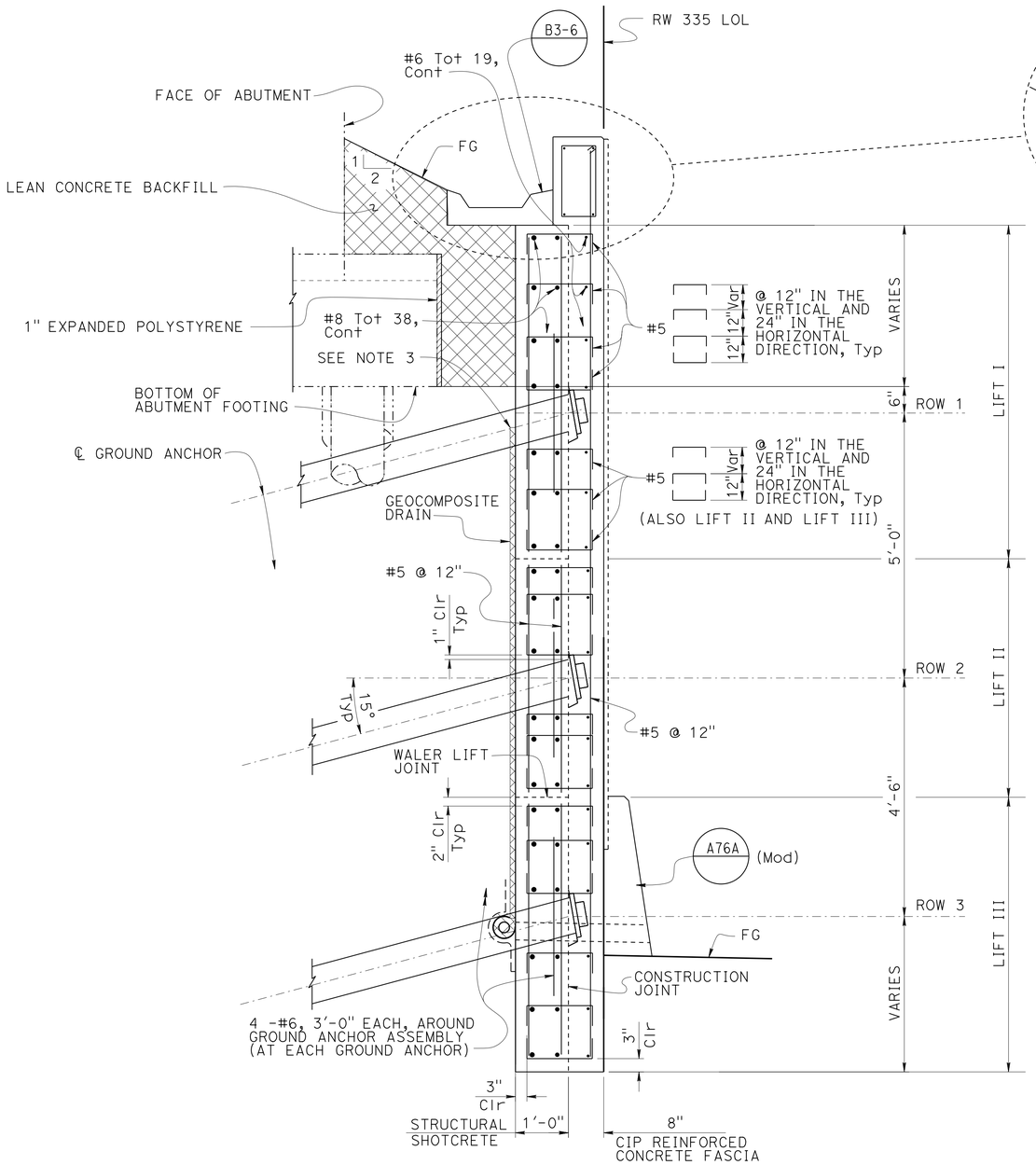

SECTION B-B

3/4" = 1'-0"

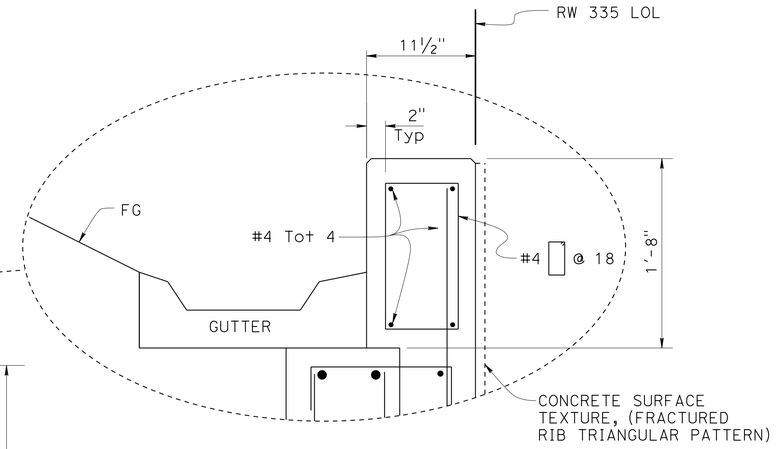

NOTES:

1. For Ground Anchors layout and distribution, see "STRUCTURAL DETAILS No. 3" sheet.
2. Bottom of Wall should be placed against undisturbed material.
3. Begin Geocomposite Drain at center line of top Soil Nail or top Ground Anchor row.
4. Remove unstable soil without damaging the footing . Do not expose bottom of the footing.

LEGEND:

Indicates Lean Concrete Backfill

TABLE No. 2									
LOCATION	ELEVATION (Ground Anchor)								
	7	8	9	10	11	12	13	14	15
Row 1	62.736								
Row 2	57.736								
Row 3	53.236								

NOTE:
THE CONTRACTOR MUST VERIFY ALL CONTROLLING FIELD DIMENSIONS BEFORE ORDERING OR FABRICATING ANY MATERIAL.

	BY	CHECKED
DESIGN	Gabriel Galo	Fred Feng
DETAILS	Stan Cholda	Gabriel Galo
QUANTITIES	Gabriel Galo	Fred Feng

STATE OF CALIFORNIA
DEPARTMENT OF TRANSPORTATION

DIVISION OF ENGINEERING SERVICES
STRUCTURE DESIGN
DESIGN BRANCH 15

BRIDGE NO. 55E0171
POST MILE 5.62

RETAINING WALL No. 335
STRUCTURAL DETAILS No. 4

STRUCTURES DESIGN DETAIL SHEET (ENGLISH) (REV. 09-01-10)

ORIGINAL SCALE IN INCHES FOR REDUCED PLANS 0 1 2 3

UNIT: 3604
PROJECT NUMBER & PHASE: 12120000181
CONTRACT NO.: 12-0M3504

DISREGARD PRINTS BEARING EARLIER REVISION DATES

REVISION DATES 10-29-15 02-22-16 03-09-16 03-25-16

SHEET 8 OF 19

FILE => 55e0171-f-sdet04.dgn

USERNAME => s128284 DATE PLOTTED => 09-AUG-2016 TIME PLOTTED => 14:16

DIST	COUNTY	ROUTE	POST MILES TOTAL PROJECT	SHEET No.	TOTAL SHEETS
12	Ora	405	2.6/6.5	421	431

REGISTERED CIVIL ENGINEER 06-10-16 DATE

6-27-16
PLANS APPROVAL DATE

REGISTERED PROFESSIONAL ENGINEER Gabriel J. Galo No. 52288 Exp. 12-31-16 CIVIL STATE OF CALIFORNIA

The State of California or its officers or agents shall not be responsible for the accuracy or completeness of scanned copies of this plan sheet.

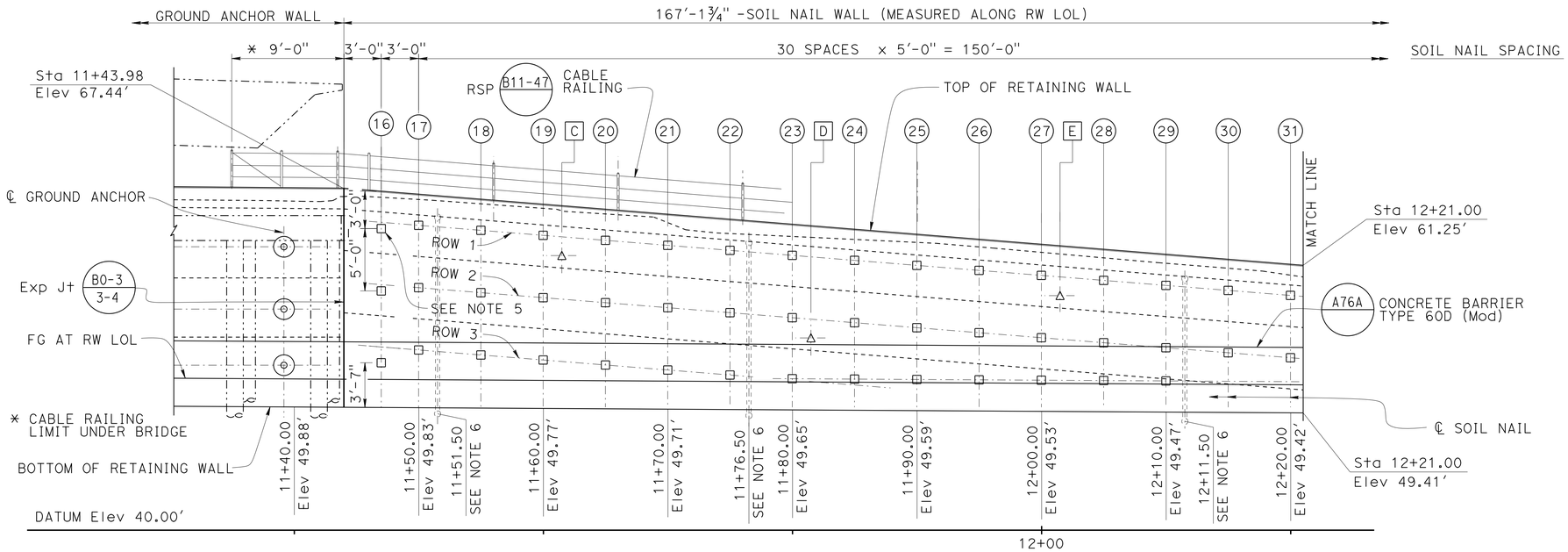

DEVELOPED ELEVATION

3/16" = 1'-0"

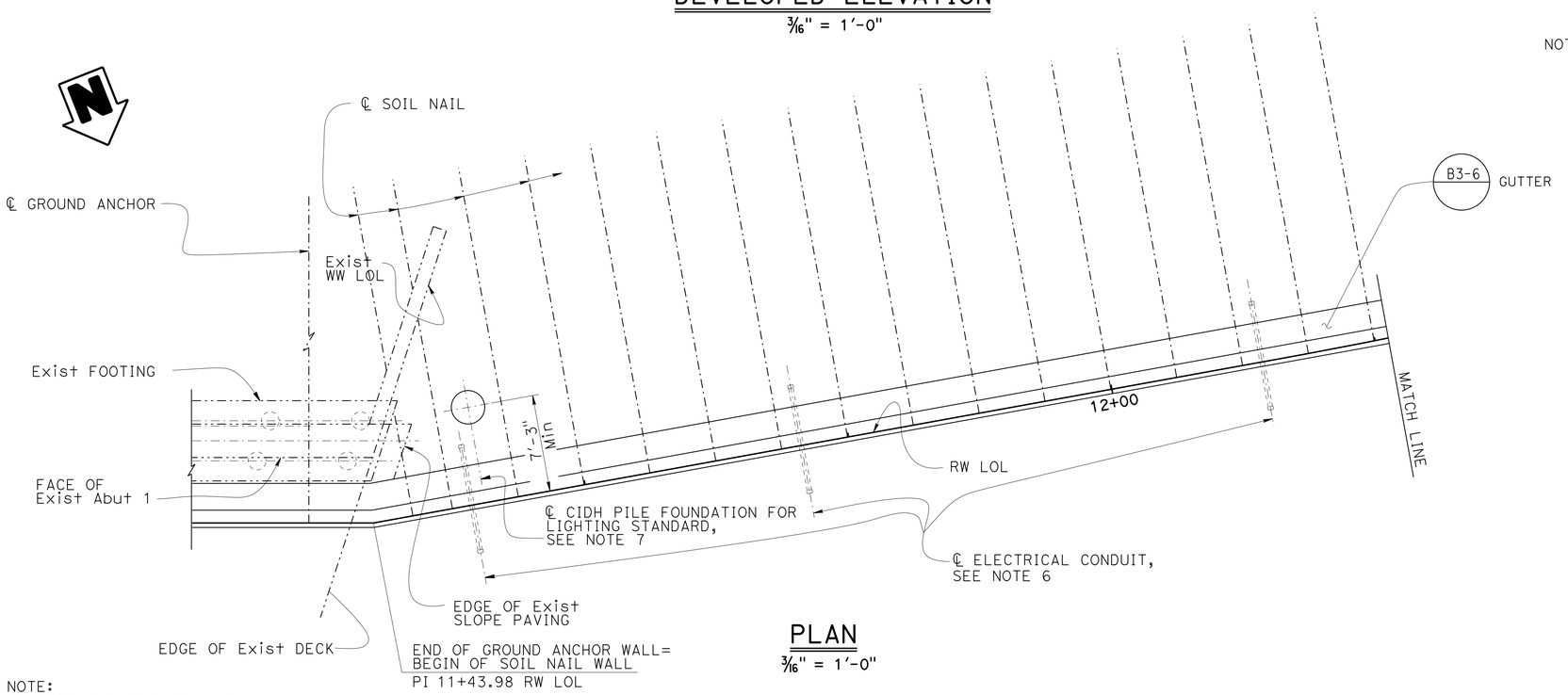

PLAN

3/16" = 1'-0"

NOTES:

1. For Soil Nail elevations, see "TABLE No. 3" and "TABLE No. 4" on "STRUCTURAL DETAILS No. 7" sheet.
2. For "SOIL NAIL ASSEMBLY DETAIL" see "STRUCTURAL DETAILS No. 8" sheet.
3. See "GENERAL PLAN No. 1" sheet for alignment information.
4. (Concrete Surface Texture) not shown for clarity.
5. Soil Nail can be placed at 20° if needed to avoid conflict with existing footing.
6. Approximate location of electrical conduit. See "ROADWAY PLANS".
7. CIDH pile for lighting standard to be constructed at mid-point between soil nails. For additional information, see "ROADWAY PLANS".

LEGEND:

- ⊙ - Ground Anchor Assembly
- □ - Soil Nail
- △ - Proof Test Soil Nail
- —·—·— - Indicates existing structure

NOTE:
THE CONTRACTOR MUST VERIFY ALL CONTROLLING FIELD DIMENSIONS BEFORE ORDERING OR FABRICATING ANY MATERIAL.

	BY	CHECKED
DESIGN	Gabriel Galo	Fred Feng
DETAILS	Stan Cholda	Fred Feng
QUANTITIES	Gabriel Galo	Fred Feng

STATE OF CALIFORNIA
DEPARTMENT OF TRANSPORTATION

DIVISION OF ENGINEERING SERVICES
STRUCTURE DESIGN
DESIGN BRANCH 15

BRIDGE NO. 55E0171
POST MILE 5.62

RETAINING WALL No. 335
STRUCTURAL DETAILS No. 5

STRUCTURES DESIGN DETAIL SHEET (ENGLISH) (REV. 09-01-10)

ORIGINAL SCALE IN INCHES FOR REDUCED PLANS 0 1 2 3

UNIT: 3604
PROJECT NUMBER & PHASE: 12120000181
CONTRACT NO.: 12-0M3504

DISREGARD PRINTS BEARING EARLIER REVISION DATES

REVISION DATES 10-29-15 03-25-16 02-22-16 02-25-16

SHEET 9 OF 19

FILE => 55e0171-f-sdet05.dgn

USERNAME => s128284 DATE PLOTTED => 09-AUG-2016 TIME PLOTTED => 14:16

DIST	COUNTY	ROUTE	POST MILES TOTAL PROJECT	SHEET No.	TOTAL SHEETS
12	Ora	405	2.6/6.5	422	431

REGISTERED CIVIL ENGINEER 06-10-16 DATE

6-27-16
PLANS APPROVAL DATE

REGISTERED PROFESSIONAL ENGINEER Gabriel J. Galo No. 52288 Exp. 12-31-16 CIVIL STATE OF CALIFORNIA

The State of California or its officers or agents shall not be responsible for the accuracy or completeness of scanned copies of this plan sheet.

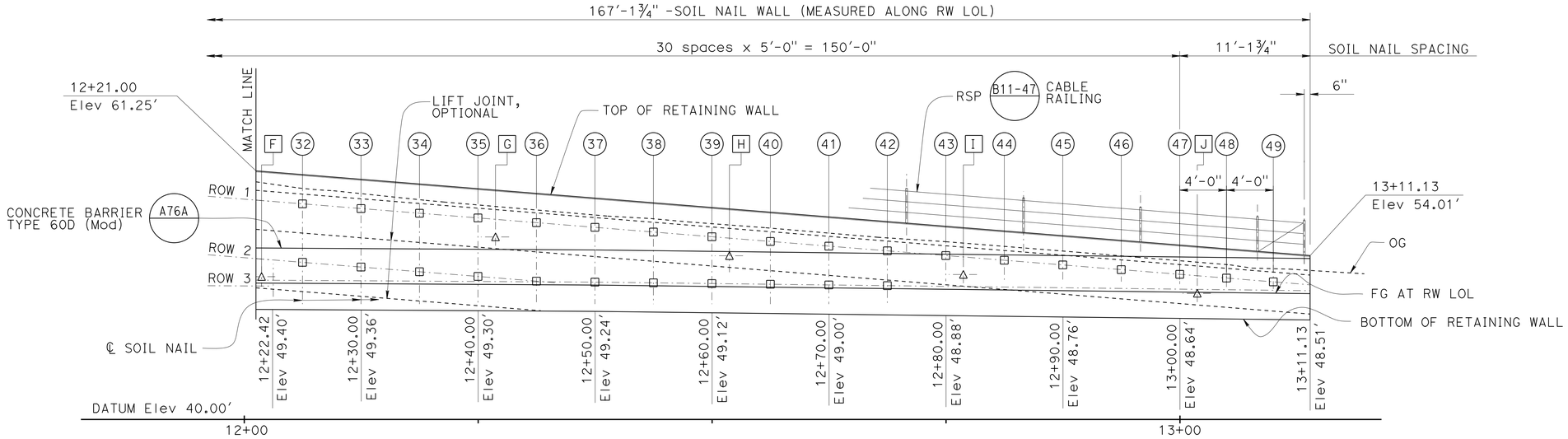

DEVELOPED ELEVATION

3/16" = 1'-0"

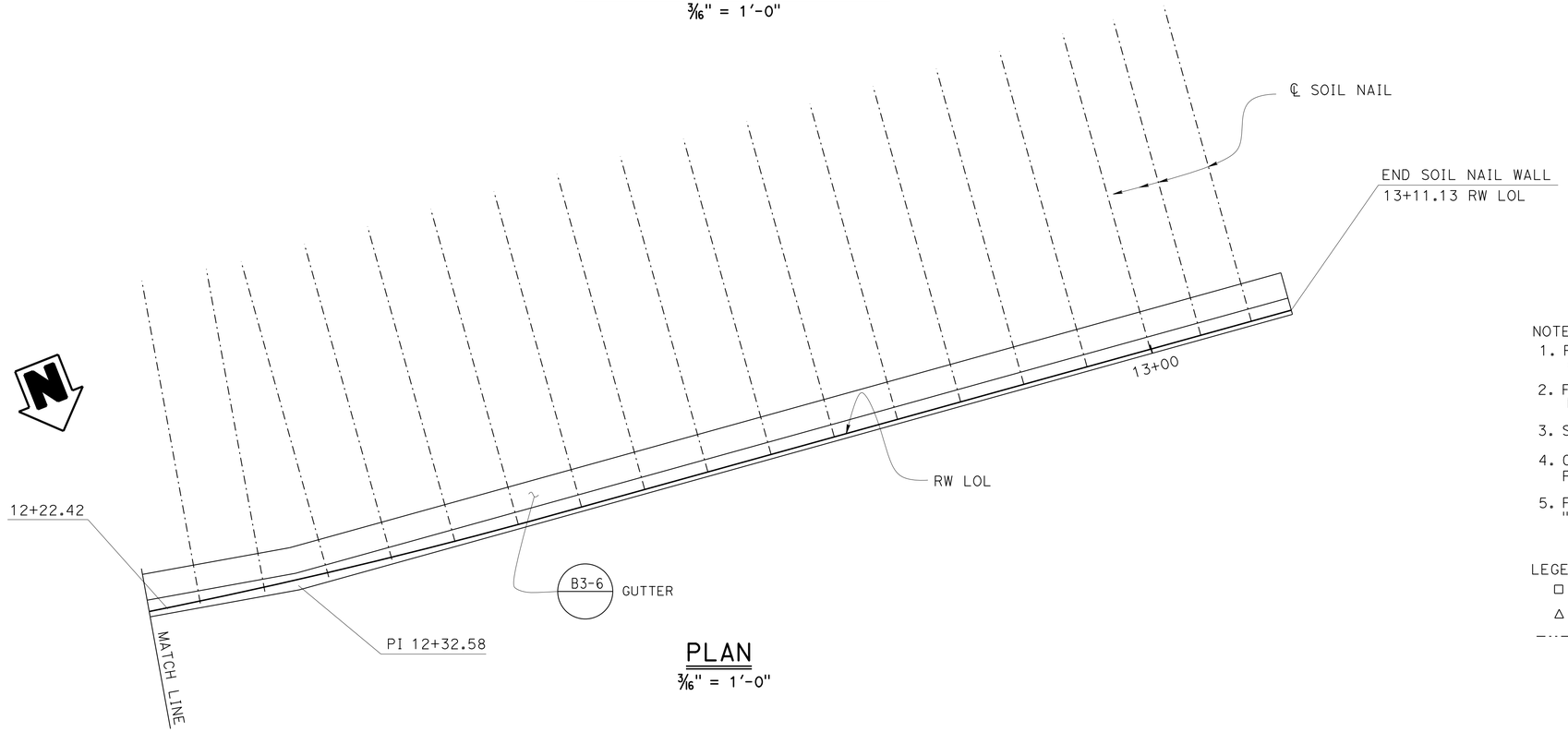

PLAN

3/16" = 1'-0"

NOTES:

1. For Soil Nail elevations, see "TABLE No. 3" and "TABLE No. 4" on "STRUCTURAL DETAILS No. 7" sheet.
2. For "SOIL NAIL ASSEMBLY DETAIL" see "STRUCTURAL DETAILS No. 8" sheet.
3. See "GENERAL PLAN No. 1" sheet for alignment information.
4. Concrete Surface Texture, (Fractured Rib Triangular Pattern) not shown for clarity.
5. For Drainage Details, see "DRAINAGE DETAILS No. 1" AND "DRAINAGE DETAILS No. 2" sheets.

LEGEND:

□ - Soil Nail

△ - Proof Test Soil Nail

—··—·· Indicates existing structure

NOTE:
THE CONTRACTOR MUST VERIFY ALL CONTROLLING FIELD DIMENSIONS BEFORE ORDERING OR FABRICATING ANY MATERIAL.

	BY	CHECKED
DESIGN	Gabriel Galo	Fred Feng
DETAILS	Stan Cholda	Fred Feng
QUANTITIES	Gabriel Galo	Fred Feng

STATE OF CALIFORNIA
DEPARTMENT OF TRANSPORTATION

DIVISION OF ENGINEERING SERVICES
STRUCTURE DESIGN
DESIGN BRANCH 15

BRIDGE NO. 55E0171
POST MILE 5.62

RETAINING WALL No. 335
STRUCTURAL DETAILS No. 6

STRUCTURES DESIGN DETAIL SHEET (ENGLISH) (REV. 09-01-10)

ORIGINAL SCALE IN INCHES FOR REDUCED PLANS 0 1 2 3

UNIT: 3604
PROJECT NUMBER & PHASE: 12120000181
CONTRACT NO.: 12-0M3504

DISREGARD PRINTS BEARING EARLIER REVISION DATES

REVISION DATES: 12-29-15 03-25-16 07-28-15 10-29-15

SHEET 10 OF 19

FILE => 55e0171-f-sdet06.dgn

USERNAME => s128284 DATE PLOTTED => 09-AUG-2016 TIME PLOTTED => 14:16

DIST	COUNTY	ROUTE	POST MILES TOTAL PROJECT	SHEET No.	TOTAL SHEETS
12	Ora	405	2.6/6.5	423	431

REGISTERED CIVIL ENGINEER 06-10-16 DATE

6-27-16
PLANS APPROVAL DATE

REGISTERED PROFESSIONAL ENGINEER
Gabriel J. Galo
No. 52288
Exp. 12-31-16
CIVIL
STATE OF CALIFORNIA

The State of California or its officers or agents shall not be responsible for the accuracy or completeness of scanned copies of this plan sheet.

TABLE No. 3

LOCATION	ELEVATION (Soil Nail)																						
	16	17	18	19	20	21	22	23	24	25	26	27	28	29	30	31	32	33	34	35	36	37	38
Row 1	64.193	64.456	64.055	63.653	63.251	62.850	62.448	62.046	61.645	61.243	60.841	60.440	60.038	59.636	59.235	58.833	58.431	58.030	57.628	57.223	56.825	56.423	56.021
Row 2	59.193	59.456	59.055	58.653	58.251	57.850	57.448	57.046	56.645	56.243	55.841	55.440	55.038	54.636	54.235	53.833	53.431	53.030	52.628	52.226			
Row 3	53.422	54.456	54.055	53.653	53.251	52.850	52.448	52.149	52.120	52.091	52.061	52.032	52.003	51.973							51.822	51.739	51.679

ELEVATION (Proof Test Soil Nail)

LOCATION	C	D	E	F	G	H	I	J
Sta	11+61.48	11+81.48	12+01.50	12+21.48	12+41.48	12+61.48	12+81.48	13+01.48
ELEVATION	62.028	55.421	58.814	52.208	55.601	53.994	52.388	50.781

TABLE No. 3 (Cont)

LOCATION	ELEVATION (Soil Nail)										
	39	40	41	42	43	44	45	46	47	48	49
Row 1	55.620	55.218	54.816	54.415	54.013	53.612	53.210	52.808	52.407	52.090	51.760
Row 2											
Row 3	51.619	51.559	51.500	51.440							

NOTE:
THE CONTRACTOR MUST VERIFY ALL CONTROLLING FIELD DIMENSIONS BEFORE ORDERING OR FABRICATING ANY MATERIAL.

	BY	CHECKED
DESIGN	Gabriel Galo	Fred Feng
DETAILS	Stan Cholda	Fred Feng
QUANTITIES	Gabriel Galo	Fred Feng

STATE OF CALIFORNIA
DEPARTMENT OF TRANSPORTATION

DIVISION OF ENGINEERING SERVICES
STRUCTURE DESIGN
DESIGN BRANCH 15

BRIDGE NO. 55E0171
POST MILE 5.62

RETAINING WALL No. 335
STRUCTURAL DETAILS No. 7

STRUCTURES DESIGN DETAIL SHEET (ENGLISH) (REV. 09-01-10)

ORIGINAL SCALE IN INCHES FOR REDUCED PLANS 0 1 2 3

UNIT: 3604
PROJECT NUMBER & PHASE: 12120000181
CONTRACT NO.: 12-0M3504

DISREGARD PRINTS BEARING EARLIER REVISION DATES

REVISION DATES: 7-16-15 8-14-15 12-28-15 03-25-16

SHEET 11 OF 19

FILE => 55e0171-f-sdet07.dgn

USERNAME => s128284 DATE PLOTTED => 09-AUG-2016 TIME PLOTTED => 14:16

DIST	COUNTY	ROUTE	POST MILES TOTAL PROJECT	SHEET No.	TOTAL SHEETS
12	Ora	405	2.6/6.5	424	431

REGISTERED CIVIL ENGINEER 06-10-16 DATE

6-27-16
PLANS APPROVAL DATE

REGISTERED PROFESSIONAL ENGINEER Gabriel J. Galo No. 52288 Exp. 12-31-16 CIVIL STATE OF CALIFORNIA

The State of California or its officers or agents shall not be responsible for the accuracy or completeness of scanned copies of this plan sheet.

NOTES:

1. The test nail embedment length, L_{eT}, must be equal to 2/3 of the embedment length, Le, of the adjacent production soil nail assemblies, but not less than 13'-0"
2. The total length of the test nail assembly equals the embedment length plus the length required for jacking equipment.
3. For location of proof test nails, see "STRUCTURE PLAN" sheets.
4. Contractor to determine drilled hole diameter.
5. Finished grout surface to be normal to the bar.

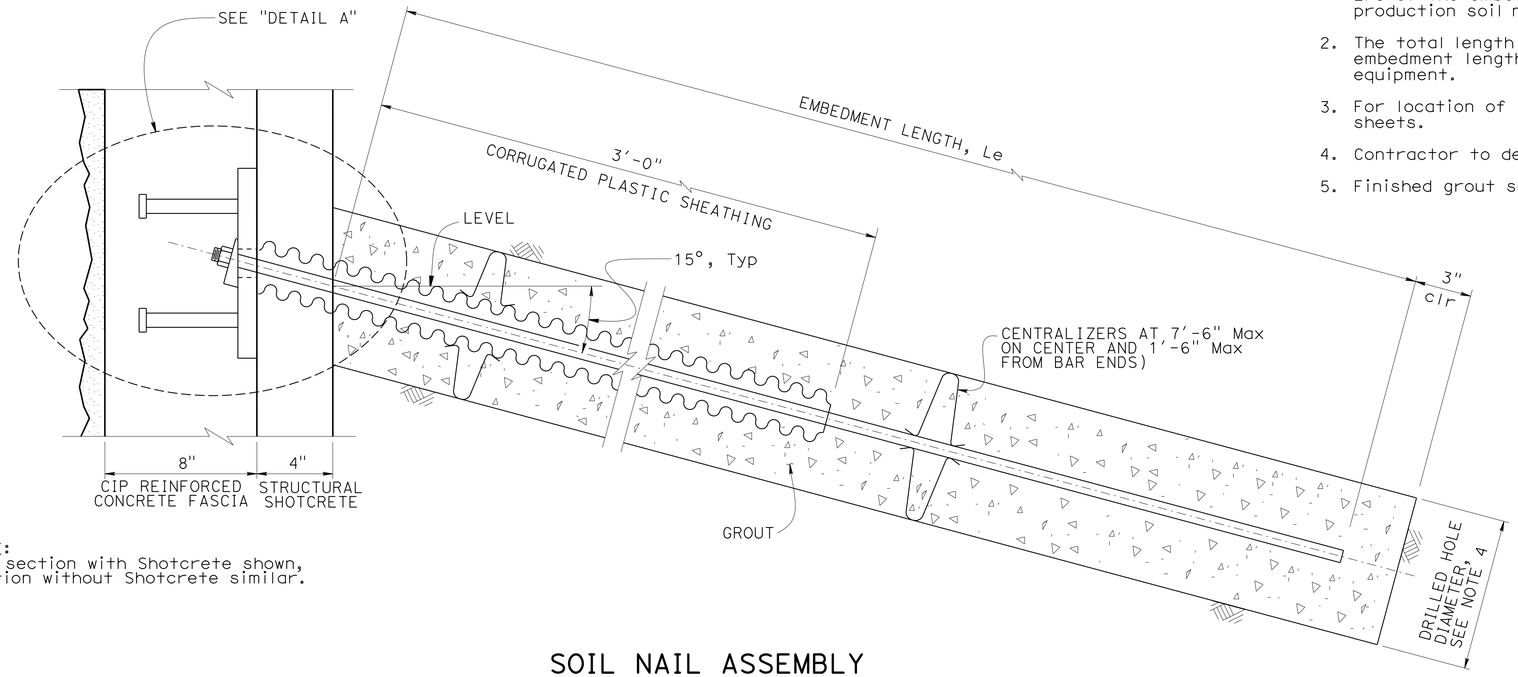

NOTE:
Wall section with Shotcrete shown,
Section without Shotcrete similar.

SOIL NAIL ASSEMBLY

3" = 1'-0"

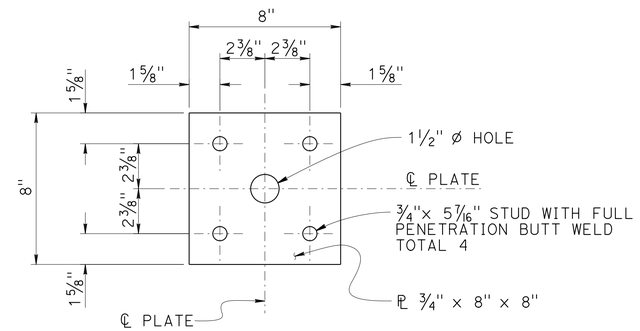

BEARING PLATE DETAIL

3" = 1'-0"

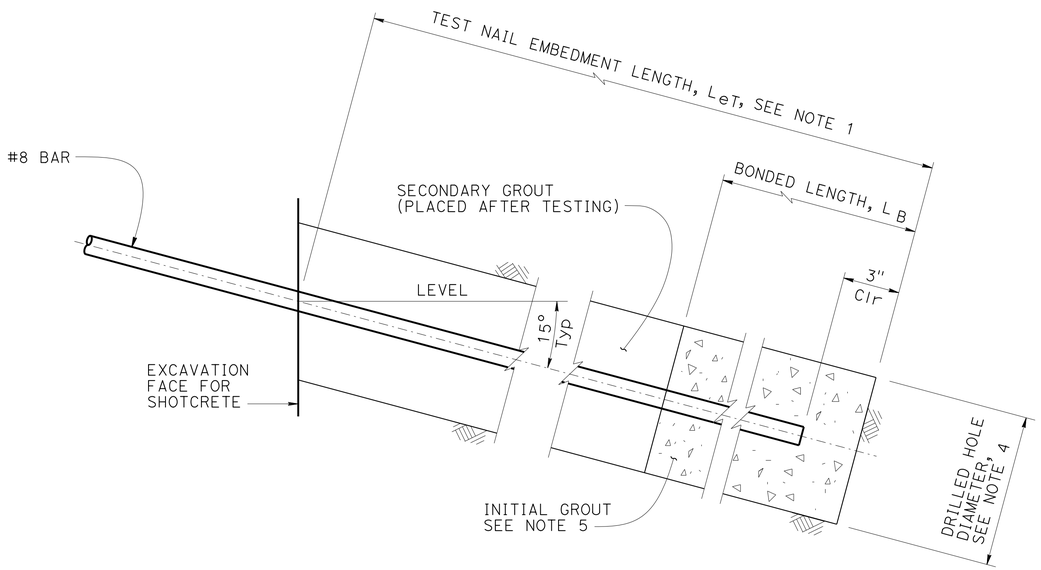

TEST NAIL DETAIL

3" = 1'-0"

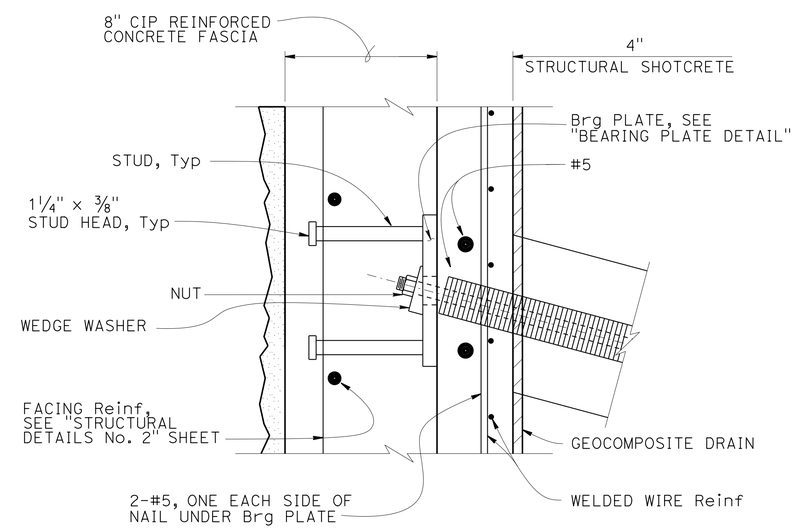

DETAIL A

3" = 1'-0"

NOTE:
THE CONTRACTOR MUST VERIFY ALL CONTROLLING FIELD DIMENSIONS BEFORE ORDERING OR FABRICATING ANY MATERIAL.

	BY	CHECKED
DESIGN	Gabriel Galo	Fred Feng
DETAILS	Stan Cholda	Gabriel Galo
QUANTITIES	Gabriel Galo	Fred Feng

STATE OF CALIFORNIA
DEPARTMENT OF TRANSPORTATION

DIVISION OF ENGINEERING SERVICES
STRUCTURE DESIGN
DESIGN BRANCH 15

BRIDGE NO. 55E0171
POST MILE 5.62

RETAINING WALL No. 335
STRUCTURAL DETAILS No. 8

STRUCTURES DESIGN DETAIL SHEET (ENGLISH) (REV. 09-01-10)

ORIGINAL SCALE IN INCHES FOR REDUCED PLANS 0 1 2 3

UNIT: 3604
PROJECT NUMBER & PHASE: 12120000181
CONTRACT NO.: 12-0M3504

DISREGARD PRINTS BEARING EARLIER REVISION DATES

REVISION DATES: 3-13-15 03-25-16 01-05-16 2-22-16

SHEET 12 OF 19

FILE => 55e0171-f-sdet08.dgn

USERNAME => s128284 DATE PLOTTED => 09-AUG-2016 TIME PLOTTED => 14:16

DIST	COUNTY	ROUTE	POST MILES TOTAL PROJECT	SHEET No.	TOTAL SHEETS
12	Ora	405	2.6/6.5	425	431

REGISTERED CIVIL ENGINEER — DATE 06-10-16

6-27-16
PLANS APPROVAL DATE

REGISTERED PROFESSIONAL ENGINEER — Gabriel J. Galo — No. 52288 — Exp. 12-31-16 — CIVIL — STATE OF CALIFORNIA

The State of California or its officers or agents shall not be responsible for the accuracy or completeness of electronic copies of this plan sheet.

GENERAL NOTES

DESIGN:
AASHTO LRFD Bridge Design Specifications, 4th Edition with California Amendments.

PRESTRESSING STEEL:
Bars - 150 ksi (1)
Strand Tendons - 270 Ksi Low Relaxation steel (1)
(2) FDL = Factored Design Load (Kips)
FTL = Factored Test Load per anchor (Kips)
(2) LL = Lock Off Load (Kips)
fpu = Minimum tensile strength of prestressing steel
As = Minimum cross sectional area of prestressing steel in ground anchor (square inch)

(2) $As(Min) = \frac{1.0\ FTL}{0.75\ fpu}$ (Strands)

(2) $As(Min) = \frac{1.0\ FTL}{0.80\ fpu}$ (Bars)

REINFORCED CONCRETE (FASCIA):
f'c = 3.6 ksi
fy = 60 ksi

SHOTCRETE:
f'c = 3.6 ksi
fy = 60 ksi

NOTES:

(1) (A) Level of initial grouting for drilled hole 6" in diameter or smaller. See Note (H)
(B) Level of secondary grouting
(C) Level of initial grouting inside corrugated sheathing
(D) Bonded length shall be determined by the contractor
(1) (E) Unbonded Length = 25 ft.
(1) (F) For inclination, see "SECTION B-B", on "STRUCTURAL DETAILS No. 4" sheet.
(G) Face of Wall Excavation
(2) (H) Location of grout break outside corrugated sheathing.

NOTES:

1. Anchorage enclosure shall only be used when anchor head assembly is not enclosed in concrete.
2. Anchorage enclosure shall have provisions to allow injecting grout at low end and venting at high end. Galvanize after fabrication.
3. Silicone sealant to cover full width of flange.
4. (1) Steel tube (Min thickness = 1/4") welded to bearing plate. Inside diameter of steel tube to be 1" greater than outside diameter of corrugated sheathing. Galvanize after fabrication.
5. (1) Steel tube (Min thickness = 1/4") welded to bearing plate. Inside diameter of stee tube to be 1" greater than outside diameter of smooth sheathing. Galvanize after fabrication.
6. (1) The steel tube must extend 6" Min into drilled hole.
7. For other wall details, see PROJECT PLANS.

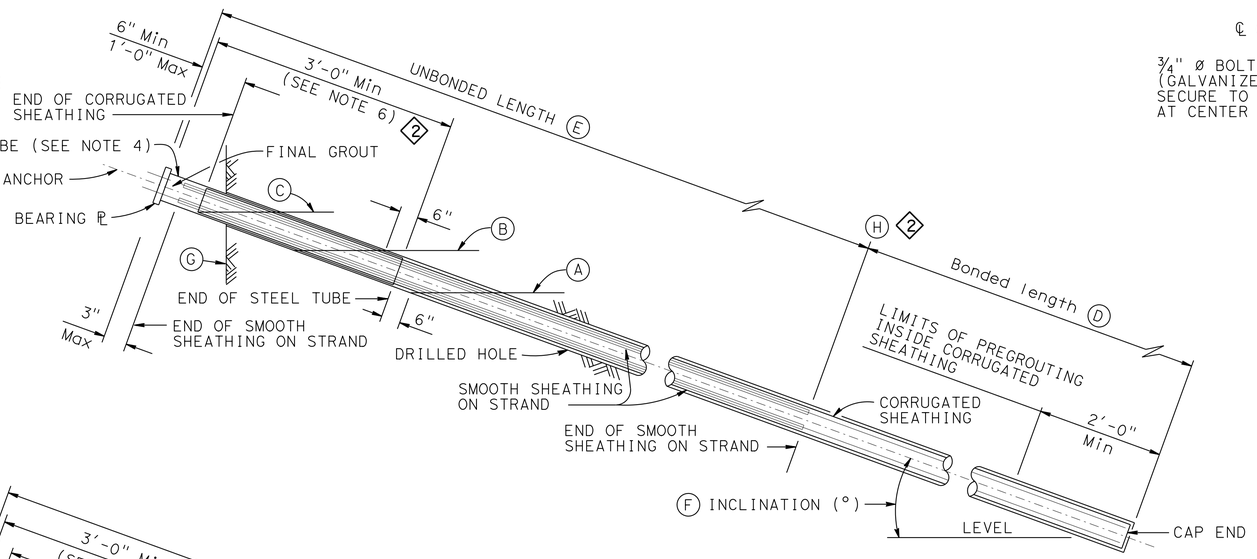

GROUND ANCHOR TENDON DETAIL (STRANDS)

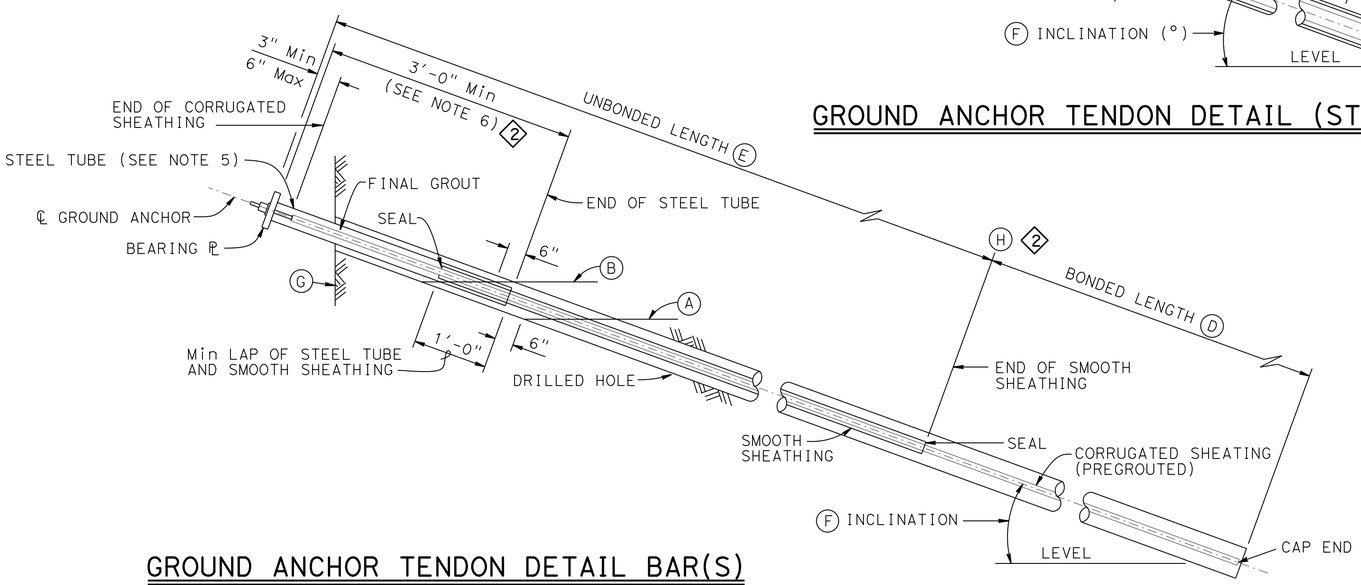

GROUND ANCHOR TENDON DETAIL BAR(S)

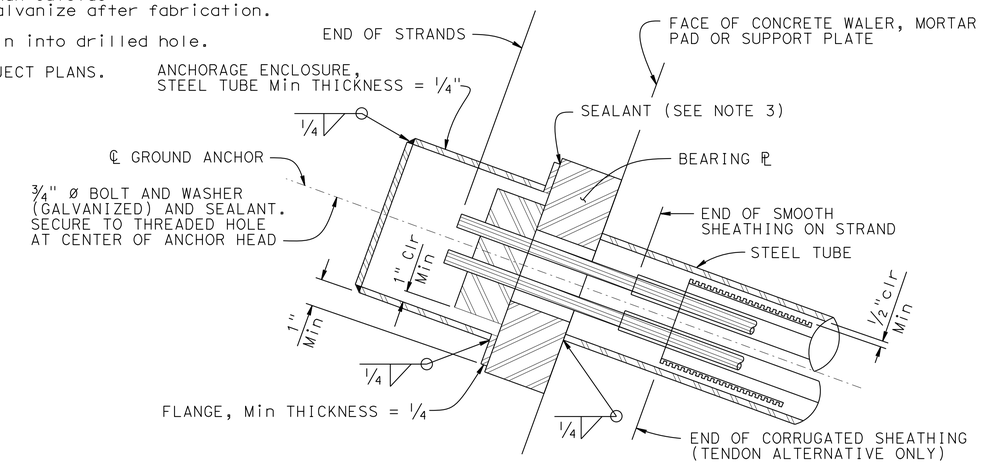

ALTERNATIVE X

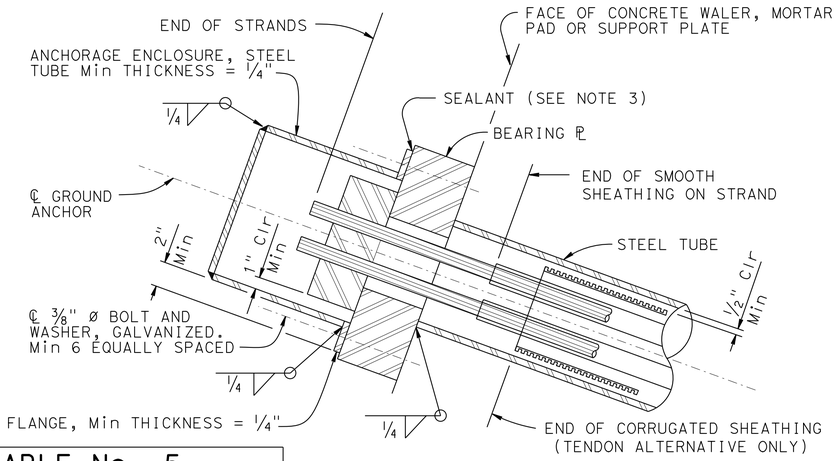

ALTERNATIVE Y

ANCHORAGE ENCLOSURE DETAILS

(3)

TABLE No. 5			
GROUND ANCHOR TEST LOAD (kip)			
LOCATION	FDL	FTL	LL
ROW 1	98.0	98.0	66.0
ROW 2	65.0	65.0	44.0
ROW 3	42.0	42.0	28.0

NO SCALE

STANDARD DRAWING
FILE NO. xs12-040
APPROVAL DATE July 2014

(1) Modified Note (3) Added "TABLE No. 5"
(2) Added Note

STATE OF CALIFORNIA
DEPARTMENT OF TRANSPORTATION

DIVISION OF ENGINEERING SERVICES

BRIDGE NO. 55E0171
POST MILE 5.62

RETAINING WALL No. 335
SUB HORIZONTAL GROUND ANCHOR DETAILS

DS OSD 2147A (ENGLISH STANDARD DRAWING "XS" BORDER REV. (02-02-11)

ORIGINAL SCALE IN INCHES FOR REDUCED PLANS 0 1 2 3

UNIT: 3604
PROJECT NUMBER & PHASE: 12120000181
CONTRACT NO.: 12-0M3504

DISREGARD PRINTS BEARING EARLIER REVISION DATES
REVISION DATES: 8-10-15 03-25-16 02-16-16 02-17-16
SHEET 13 OF 19

FILE => 55e0171-g-gadet.dgn

USERNAME => s128284 DATE PLOTTED => 09-AUG-2016 TIME PLOTTED => 14:16

DIST	COUNTY	ROUTE	POST MILES TOTAL PROJECT	SHEET No.	TOTAL SHEETS
12	Ora	405	2.6/6.5	426	431

REGISTERED CIVIL ENGINEER — DATE 06-10-16

6-27-16
PLANS APPROVAL DATE

REGISTERED PROFESSIONAL ENGINEER — Gabriel J. Galo — No. 52288 — Exp. 12-31-16 — CIVIL — STATE OF CALIFORNIA

The State of California or its officers or agents shall not be responsible for the accuracy or completeness of scanned copies of this plan sheet.

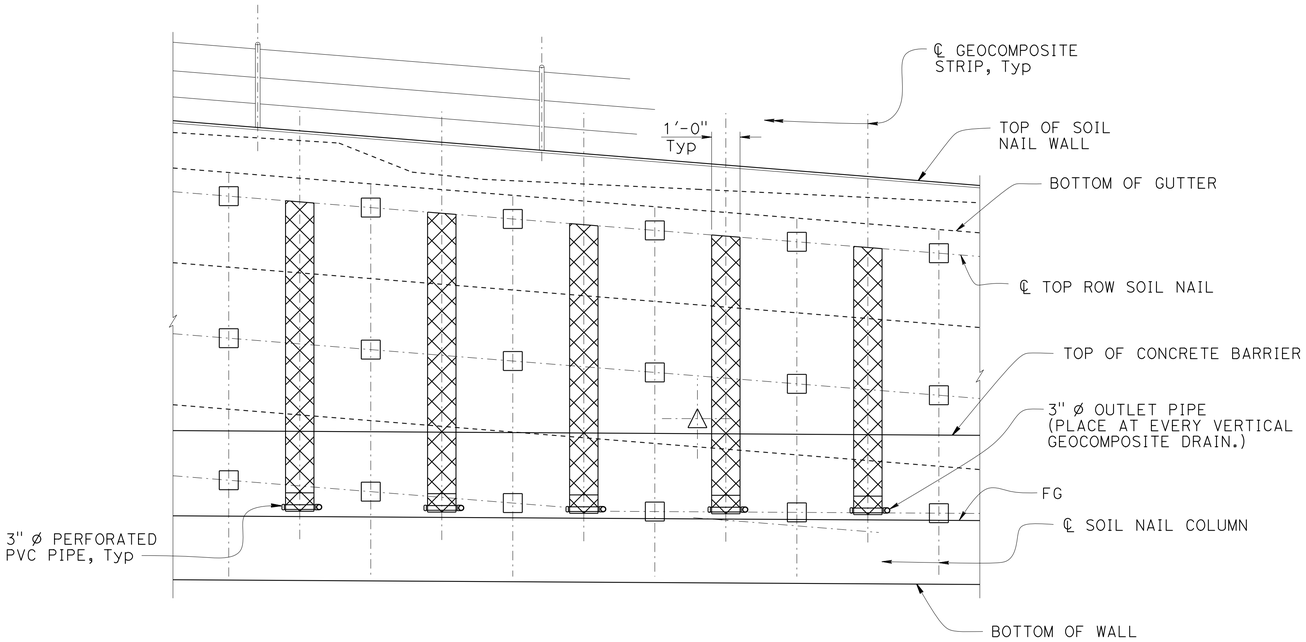

PARTIAL ELEVATION

3/8" = 1'-0"

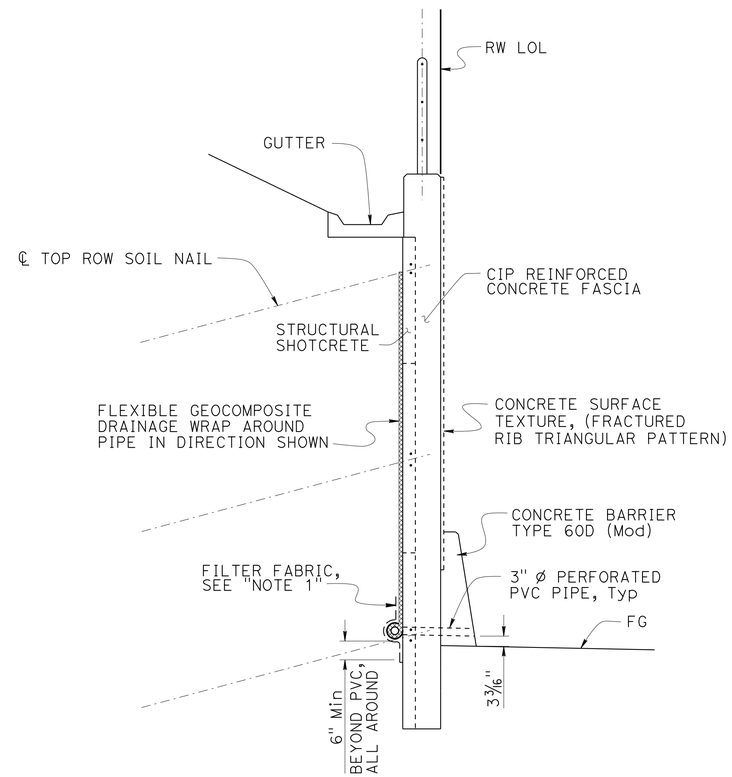

SOIL NAIL SECTION

1/2" = 1'-0"

NOTES:

1. Provide filter fabric where necessary to prevent soil from entering drain.
2. Center Geocomposite Drains between Soil Nail columns.
3. Geocomposite Drains must have filter fabric on soil side and wrapped around top and side edges, see "DRAINAGE DETAILS No. 2" sheet.
4. Begin Geocomposite Drain at center line of top Soil Nail or top Ground Anchor row.

LEGEND:

□ - Indicates Soil Nail location. See "STRUCTURAL DETAILS No. 1" through "STRUCTURAL DETAILS No. 8" sheets for the layout of these elements and the location of the geocomposite strip placement.

△ - Indicates Proof Test Soil Nails

NOTE:
THE CONTRACTOR MUST VERIFY ALL CONTROLLING FIELD DIMENSIONS BEFORE ORDERING OR FABRICATING ANY MATERIAL.

	BY	CHECKED
DESIGN	Gabriel Galo	Fred Feng
DETAILS	Stan Cholda	Gabriel Galo
QUANTITIES	Gabriel Galo	Fred Feng

STATE OF CALIFORNIA
DEPARTMENT OF TRANSPORTATION

DIVISION OF ENGINEERING SERVICES
STRUCTURE DESIGN
DESIGN BRANCH 15

BRIDGE NO. 55E0171
POST MILE 5.62

RETAINING WALL No. 335
DRAINAGE DETAILS No. 1

STRUCTURES DESIGN DETAIL SHEET (ENGLISH) (REV. 09-01-10)

ORIGINAL SCALE IN INCHES FOR REDUCED PLANS 0 1 2 3

UNIT: 3604
PROJECT NUMBER & PHASE: 12120000181
CONTRACT NO.: 12-0M3504

DISREGARD PRINTS BEARING EARLIER REVISION DATES

REVISION DATES: 10-29-15 01-05-16 03-25-16 8-30-15

SHEET 14 OF 19

FILE => 55e0171-r-ddet01.dgn

USERNAME => s128284 DATE PLOTTED => 09-AUG-2016 TIME PLOTTED => 14:16

DIST	COUNTY	ROUTE	POST MILES TOTAL PROJECT	SHEET No.	TOTAL SHEETS
12	Ora	405	2.6/6.5	427	431

REGISTERED CIVIL ENGINEER 06-10-16 DATE

6-27-16
PLANS APPROVAL DATE

REGISTERED PROFESSIONAL ENGINEER Gabriel J. Galo No. 52288 Exp. 12-31-16 CIVIL STATE OF CALIFORNIA

The State of California or its officers or agents shall not be responsible for the accuracy or completeness of scanned copies of this plan sheet.

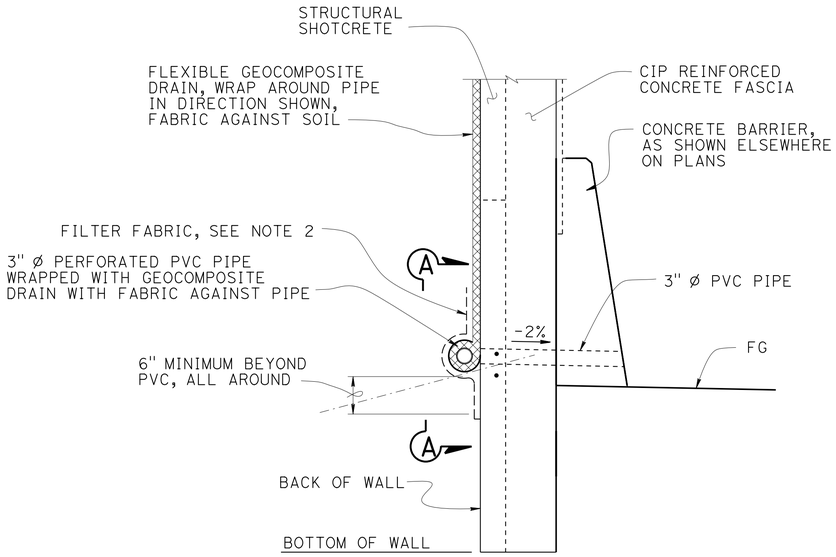

WALL DRAIN DETAIL AT WEEPHOLE OPTION A

NO SCALE

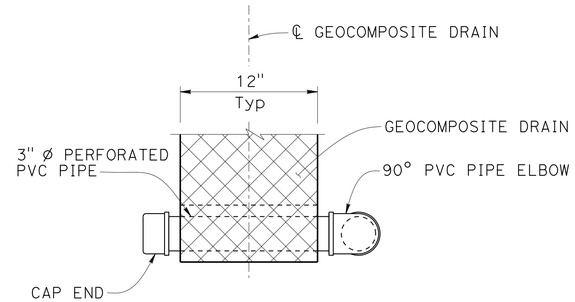

VIEW A-A

NO SCALE

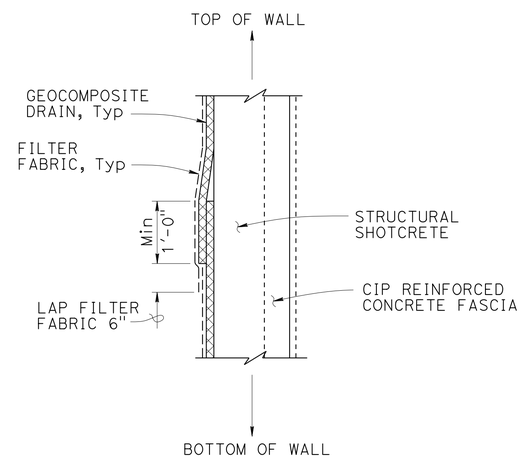

DRAIN SPLICE

NO SCALE

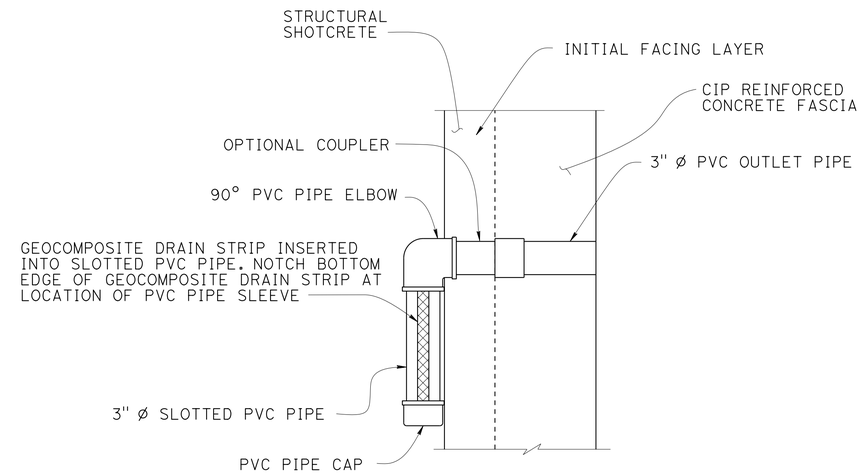

SECTION B-B

NO SCALE

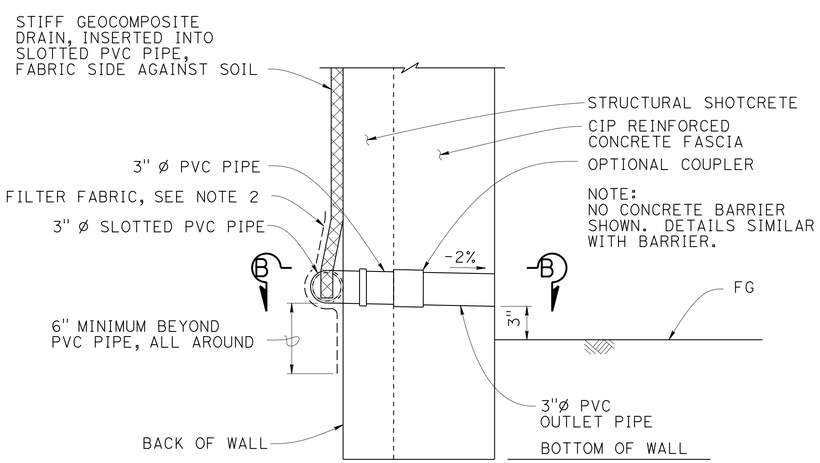

WALL DRAIN DETAIL AT WEEPHOLE OPTION B

NO SCALE

NOTE:
THE CONTRACTOR MUST VERIFY ALL CONTROLLING FIELD DIMENSIONS BEFORE ORDERING OR FABRICATING ANY MATERIAL.

NOTES:

1. Center Geocomposite Drains between soil nail columns.
2. Provide filter fabric where necessary to prevent soil from entering drain.
3. Alternative drain outlet details may be submitted for Engineer's approval.
4. Splice length for Geocomposite drain shall be 12".

	BY	CHECKED
DESIGN	Gabriel Galo	Fred Feng
DETAILS	Stan Cholda	Gabriel Galo
QUANTITIES	Gabriel Galo	Fred Feng

STATE OF CALIFORNIA
DEPARTMENT OF TRANSPORTATION

DIVISION OF ENGINEERING SERVICES
STRUCTURE DESIGN
DESIGN BRANCH 15

BRIDGE NO. 55E0171
POST MILE 5.62

RETAINING WALL No. 335
DRAINAGE DETAILS No. 2

STRUCTURES DESIGN DETAIL SHEET (ENGLISH) (REV. 09-01-10)

ORIGINAL SCALE IN INCHES FOR REDUCED PLANS 0 1 2 3

UNIT: 3604
PROJECT NUMBER & PHASE: 12120000181
CONTRACT NO.: 12-0M3504

DISREGARD PRINTS BEARING EARLIER REVISION DATES

REVISION DATES 07-18-15 03-25-16 8-18-15 01-05-16

SHEET 15 OF 19

FILE => 55e0171-r-ddet02.dgn

USERNAME => s128284 DATE PLOTTED => 09-AUG-2016 TIME PLOTTED => 14:16

DIST	COUNTY	ROUTE	POST MILES TOTAL PROJECT	SHEET No.	TOTAL SHEETS
12	Ora	405	2.6/6.5	428	431

REGISTERED CIVIL ENGINEER 06-10-16 DATE

06-27-16
PLANS APPROVAL DATE

REGISTERED PROFESSIONAL ENGINEER Gabriel J. Galo No. 52288 Exp. 12-31-16 CIVIL STATE OF CALIFORNIA

The State of California or its officers or agents shall not be responsible for the accuracy or completeness of scanned copies of this plan sheet.

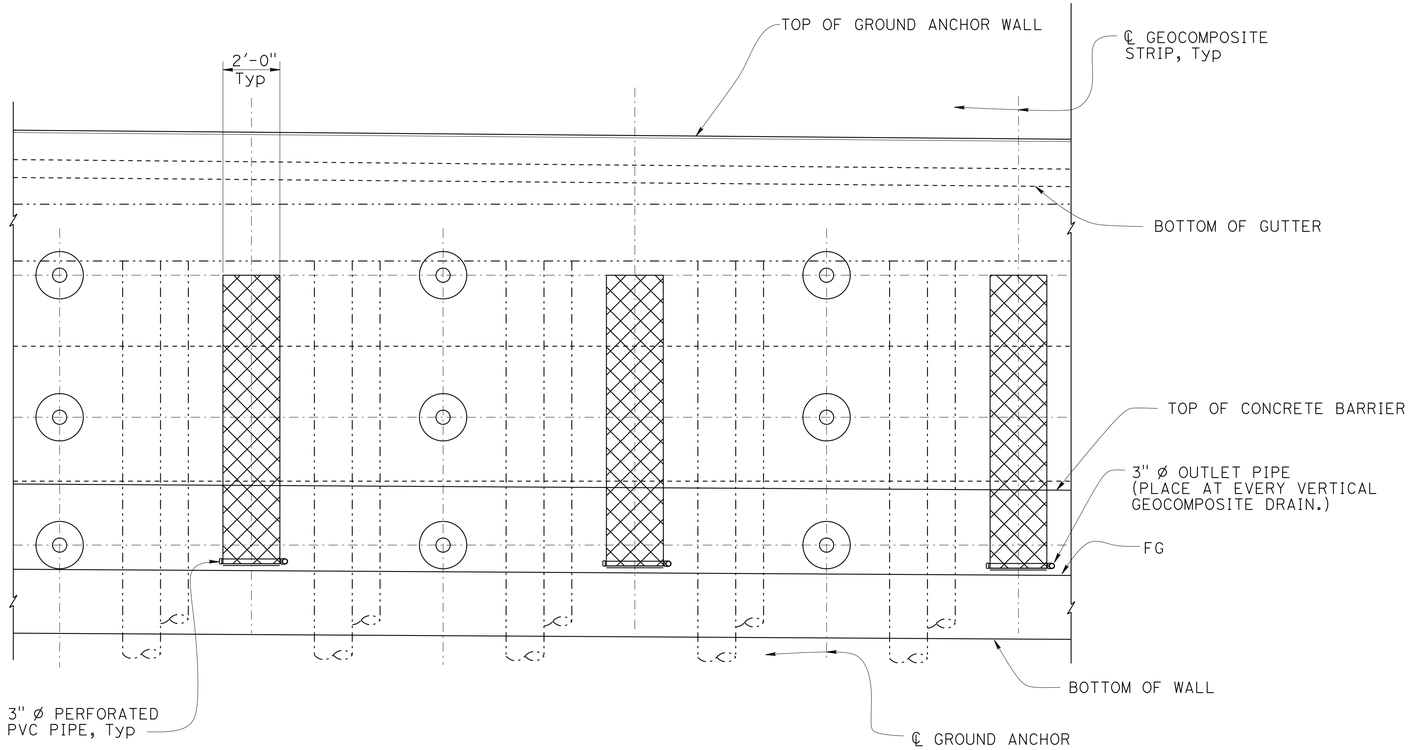

PARTIAL ELEVATION

3/8" = 1'-0"

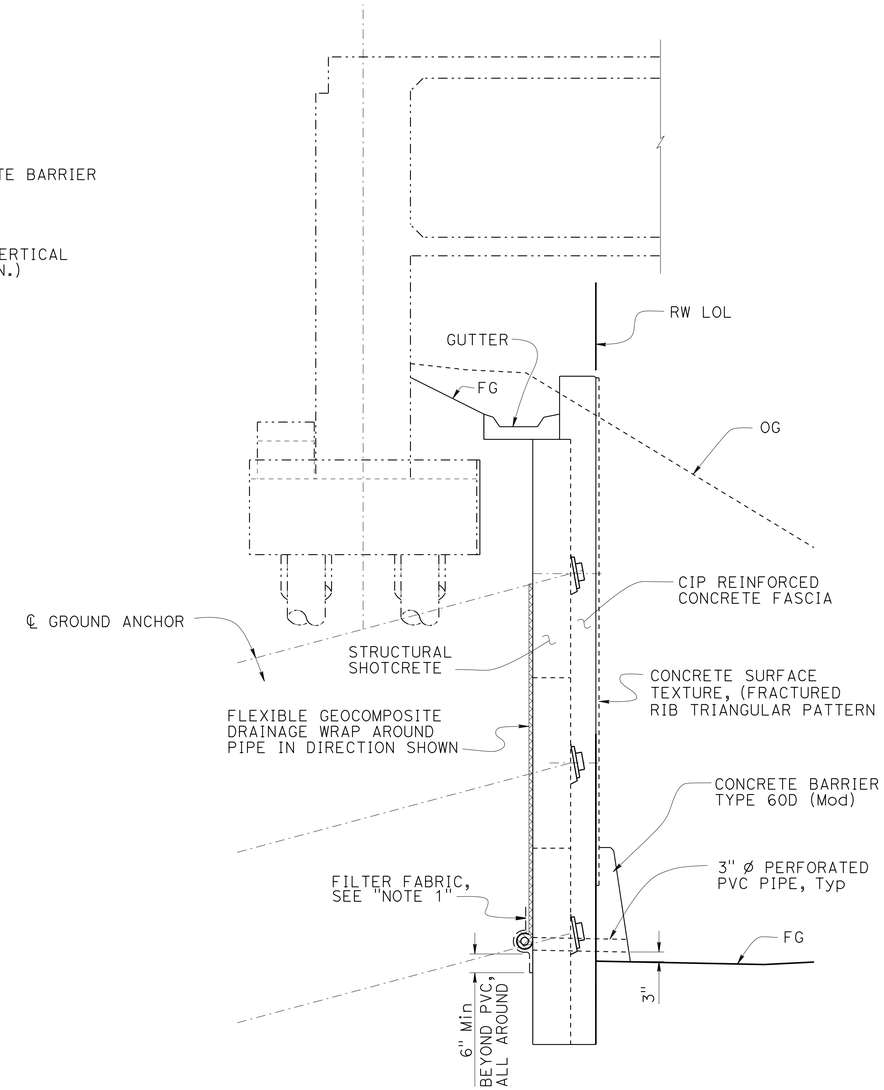

GROUND ANCHOR SECTION

1/2" = 1'-0"

NOTES:

1. Provide filter fabric where necessary to prevent soil from entering drain.
2. Center Geocomposite Drains between Ground Anchors columns.
3. Geocomposite Drains must have filter fabric on soil side and wrapped around top and side edges, see "DRAINAGE DETAILS No. 2" sheet.
4. Begin Geocomposite Drain at center line of top Ground Anchor row.

LEGEND:

○ - Indicates Ground Anchor location. See "STRUCTURAL DETAILS No. 1" through "STRUCTURAL DETAILS No. 8" sheets for the layout of these elements and the location of the geocomposite strip placement.

NOTE:
THE CONTRACTOR MUST VERIFY ALL CONTROLLING FIELD DIMENSIONS BEFORE ORDERING OR FABRICATING ANY MATERIAL.

	BY	CHECKED
DESIGN	Gabriel Galo	Fred Feng
DETAILS	Stan Cholda	Gabriel Galo
QUANTITIES	Gabriel Galo	Fred Feng

STATE OF CALIFORNIA
DEPARTMENT OF TRANSPORTATION

DIVISION OF ENGINEERING SERVICES
STRUCTURE DESIGN
DESIGN BRANCH 15

BRIDGE NO. 55E0171
POST MILE 5.62

RETAINING WALL No. 335
DRAINAGE DETAILS No. 3

STRUCTURES DESIGN DETAIL SHEET (ENGLISH) (REV. 09-01-10)

ORIGINAL SCALE IN INCHES FOR REDUCED PLANS 0 1 2 3

UNIT: 3604
PROJECT NUMBER & PHASE: 12120000181
CONTRACT NO.: 12-0M3504

DISREGARD PRINTS BEARING EARLIER REVISION DATES

REVISION DATES 01-05-16 07-25-15 03-25-16 10-29-15

SHEET 16 OF 19

FILE => 55e0171-r-ddet03.dgn

USERNAME => s128284 DATE PLOTTED => 09-AUG-2016 TIME PLOTTED => 14:16

DIST	COUNTY	ROUTE	POST MILES TOTAL PROJECT	SHEET No.	TOTAL SHEETS
12	Ora	405	2.6/6.5	429	431

REGISTERED CIVIL ENGINEER 06-10-16 DATE

06-27-16
PLANS APPROVAL DATE

REGISTERED PROFESSIONAL ENGINEER Gabriel J. Galo No. 52288 Exp. 12-31-16 CIVIL STATE OF CALIFORNIA

The State of California or its officers or agents shall not be responsible for the accuracy or completeness of scanned copies of this plan sheet.

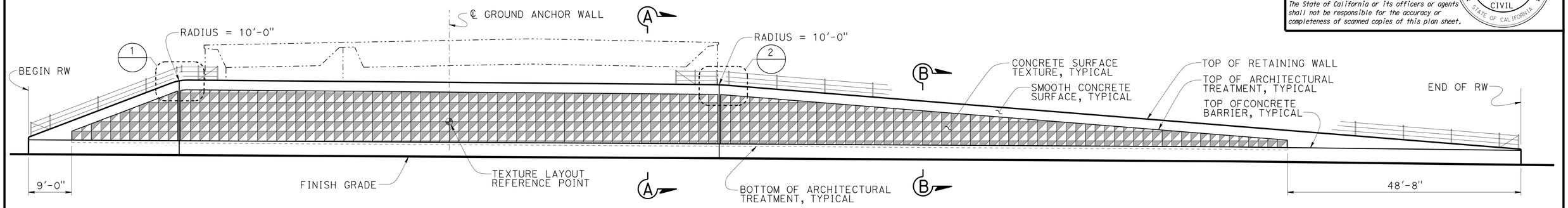

DEVELOPED ELEVATION

3/16" = 1'-0"

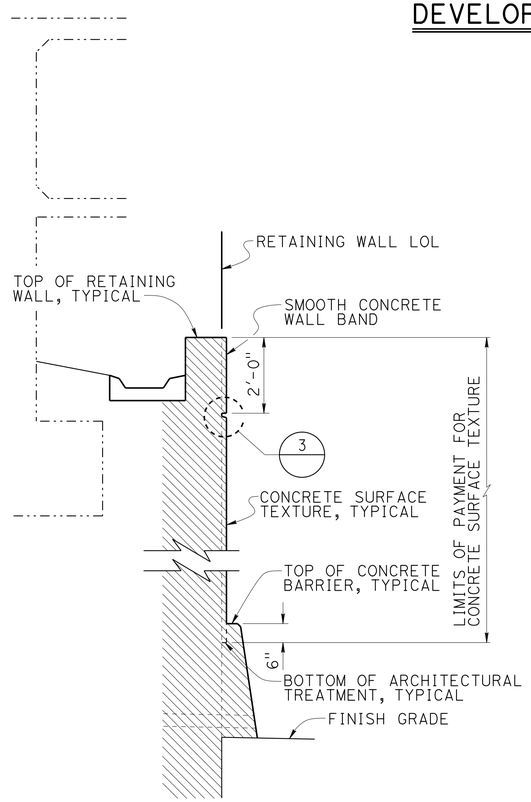

SECTION A-A

1/2" = 1'-0"

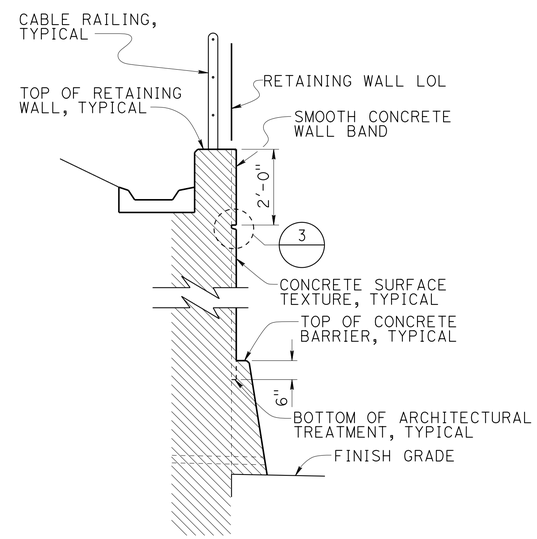

SECTION B-B

1/2" = 1'-0"

NOTE:
THE CONTRACTOR MUST VERIFY ALL CONTROLLING FIELD DIMENSIONS BEFORE ORDERING OR FABRICATING ANY MATERIAL.

	BY	CHECKED
DESIGN	Isaac Tasabia	Gabriel Galo
DETAILS	Isaac Tasabia	Gabriel Galo
QUANTITIES	Gabriel Galo	Fred Feng

STATE OF CALIFORNIA
DEPARTMENT OF TRANSPORTATION

DIVISION OF ENGINEERING SERVICES
STRUCTURE DESIGN
DESIGN BRANCH 15

BRIDGE NO. 55E0171
POST MILE 5.62

RETAINING WALL No. 335
ARCHITECTURAL DETAILS No. 1

STRUCTURES DESIGN DETAIL SHEET (ENGLISH) (REV. 09-01-10)

ORIGINAL SCALE IN INCHES FOR REDUCED PLANS 0 1 2 3

UNIT: 3604
PROJECT NUMBER & PHASE: 12120000181
CONTRACT NO.: 12-0M3504

DISREGARD PRINTS BEARING EARLIER REVISION DATES

REVISION DATES 10-01-15 10-30-15 12-29-15 03-25-16

SHEET 17 OF 19

FILE => 55e0171-u-arch01.dgn

USERNAME => s128284 DATE PLOTTED => 09-AUG-2016 TIME PLOTTED => 14:16

DIST	COUNTY	ROUTE	POST MILES TOTAL PROJECT	SHEET No.	TOTAL SHEETS
12	Ora	405	2.6/6.5	430	431

REGISTERED CIVIL ENGINEER 06-10-16 DATE

06-27-16
PLANS APPROVAL DATE

REGISTERED PROFESSIONAL ENGINEER Gabriel J. Galo No. 52288 Exp. 12-31-16 CIVIL STATE OF CALIFORNIA

The State of California or its officers or agents shall not be responsible for the accuracy or completeness of scanned copies of this plan sheet.

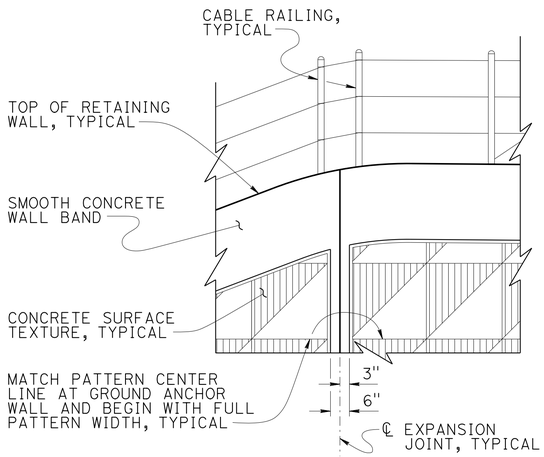

1 DETAIL
½" = 1'-0"

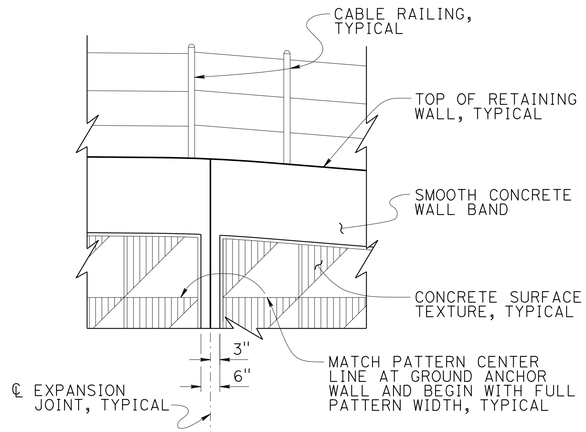

2 DETAIL
½" = 1'-0"

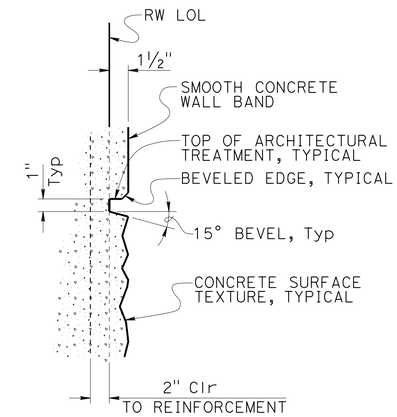

3 DETAIL
½" = 1'-0"

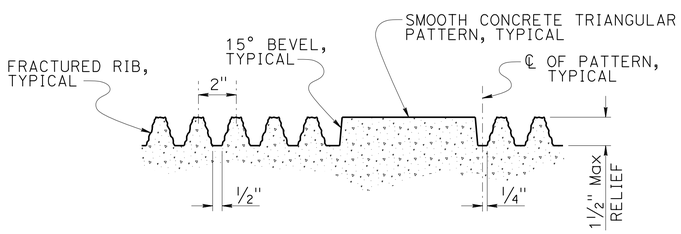

5 DETAIL
½" = 1'-0"

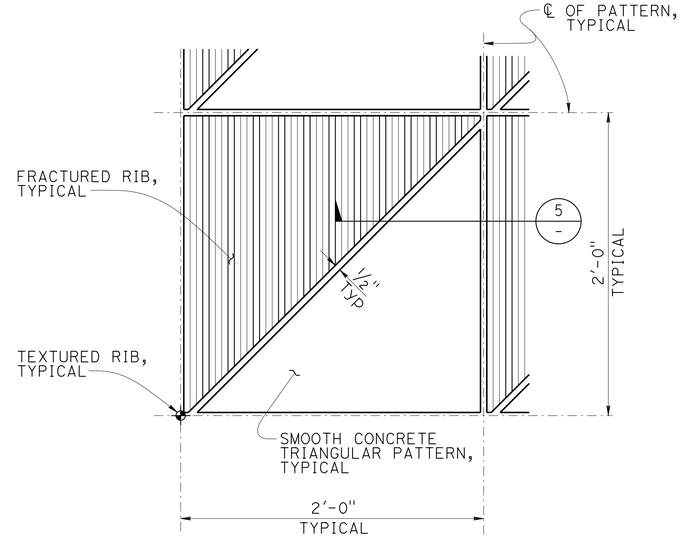

4 DETAIL
½" = 1'-0"

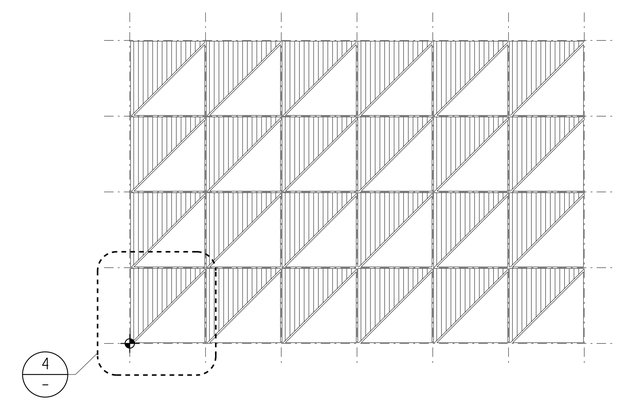

FRACTURED RIB TRIANGULAR PATTERN - ELEVATION VIEW

CONCRETE SURFACE TEXTURE

NO SCALE

NOTE:
THE CONTRACTOR MUST VERIFY ALL CONTROLLING FIELD DIMENSIONS BEFORE ORDERING OR FABRICATING ANY MATERIAL.

	BY	CHECKED
DESIGN	Isaac Tasabia	Gabriel Galo
DETAILS	Isaac Tasabia	Gabriel Galo
QUANTITIES	Gabriel Galo	Fred Feng

STATE OF CALIFORNIA
DEPARTMENT OF TRANSPORTATION

DIVISION OF ENGINEERING SERVICES
STRUCTURE DESIGN
DESIGN BRANCH 15

BRIDGE NO. 55E0171
POST MILE 5.62

RETAINING WALL No. 335
ARCHITECTURAL DETAILS No. 2

STRUCTURES DESIGN DETAIL SHEET (ENGLISH) (REV. 09-01-10)

ORIGINAL SCALE IN INCHES FOR REDUCED PLANS 0 1 2 3

UNIT: 3604
PROJECT NUMBER & PHASE: 12120000181
CONTRACT NO.: 12-0M3504

DISREGARD PRINTS BEARING EARLIER REVISION DATES

REVISION DATES 10-30-15 02-22-16 03-25-16

SHEET 18 OF 19

FILE => 55e0171-u-arch02.dgn

USERNAME => s128284 DATE PLOTTED => 09-AUG-2016 TIME PLOTTED => 14:16

DIST	COUNTY	ROUTE	POST MILES TOTAL PROJECT	SHEET No.	TOTAL SHEETS
12	Ora	405	2.6/6.5	431	431

REGISTERED CIVIL ENGINEER 12-18-15 DATE

06-27-16
PLANS APPROVAL DATE

REGISTERED PROFESSIONAL ENGINEER Sungro Cho No. C75151 Exp. 12-31-17 CIVIL STATE OF CALIFORNIA

The State of California or its officers or agents shall not be responsible for the accuracy or completeness of electronic copies of this plan sheet.

This LOTB sheet was prepared in accordance with the Caltrans Soil & Rock Logging, Classification, & Presentation Manual (2010 Edition).

See 2010 Standard Plans A10F and A10G for Soil Legend, and A10H for Rock Legend.

BENCH MARK

BM 3DD-14-91 Elev 61.76
Southeasterly corner of the intersection of Culver Drive and the Northbound 405 freeway off-ramp, 35′ Southeasterly of the ℄ of Culver Drive and 40′ Northeasterly of the ℄ of the Northbound off-ramp.
NAVD88

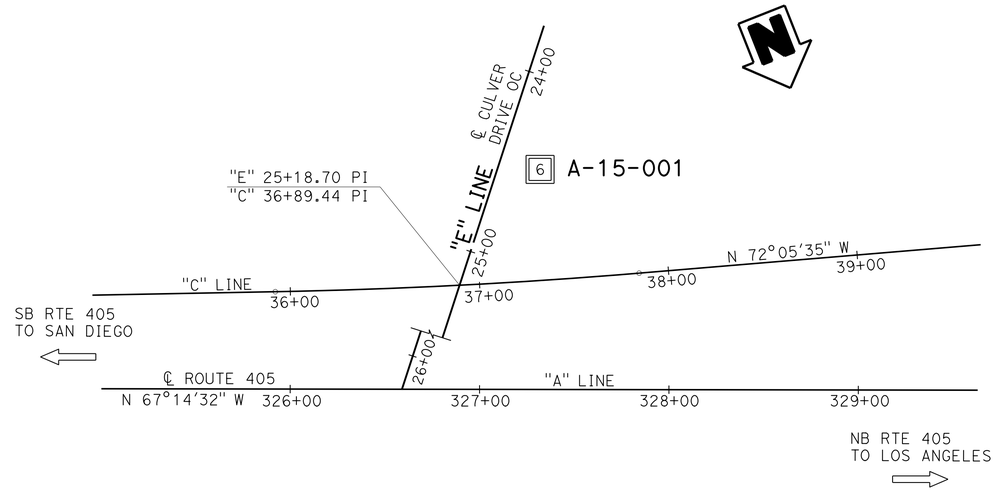

PLAN

1" = 40′

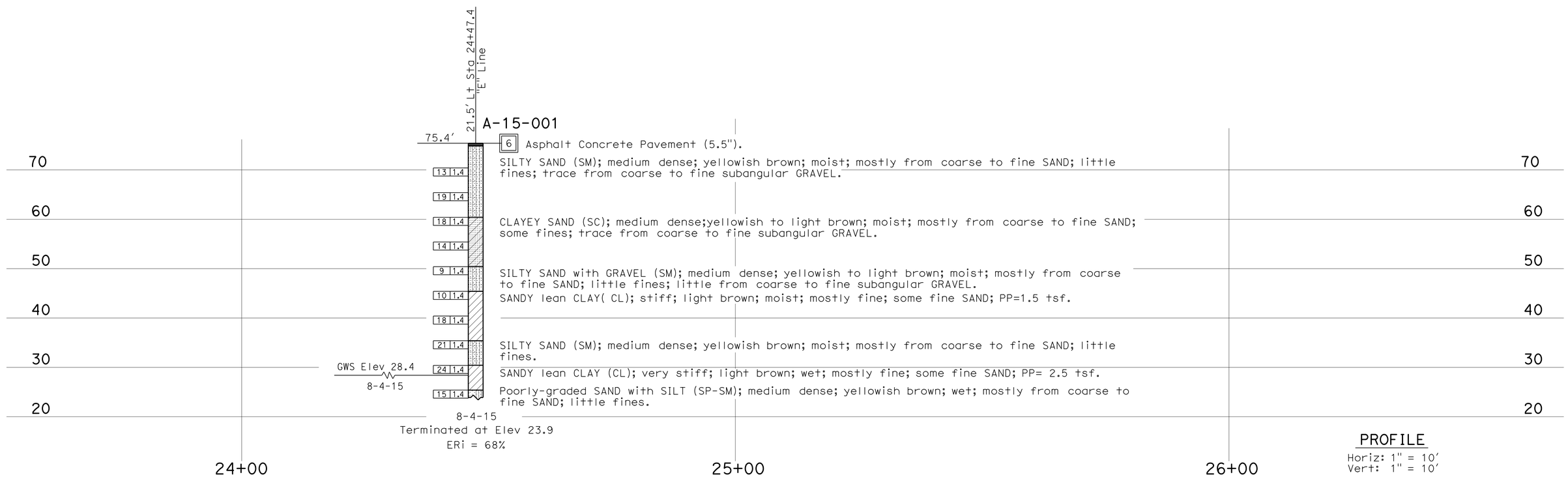

PROFILE

Horiz: 1" = 10′
Vert: 1" = 10′

ENGINEERING SERVICES	MATERIALS AND GEOTECHNICAL SERVICES	STATE OF CALIFORNIA DEPARTMENT OF TRANSPORTATION	DIVISION OF ENGINEERING SERVICES STRUCTURE DESIGN DESIGN BRANCH 15	BRIDGE NO. 55E0171 POST MILE 5.62	RETAINING WALL No. 335 LOG OF TEST BORINGS
FUNCTIONAL SUPERVISOR NAME: D. Jang	DRAWN BY: I. G-Remmen CHECKED BY: N. Lee	FIELD INVESTIGATION BY: S. Cho			

OGS CIVIL LOG OF TEST BORINGS SHEET

ORIGINAL SCALE IN INCHES FOR REDUCED PLANS 0 1 2 3

UNIT: 3650
PROJECT NUMBER & PHASE: 12120000181 CONTRACT NO.: 12-0M3504

DISREGARD PRINTS BEARING EARLIER REVISION DATES

REVISION DATES 12-09-15 12-30-15 02-22-16

SHEET 19 OF 19

FILE => 55e0171-z-lttb.dgn

USERNAME => s128284 DATE PLOTTED => 09-AUG-2016 TIME PLOTTED => 14:17