Dist	COUNTY	ROUTE	POST MILES TOTAL PROJECT	SHEET No.	TOTAL SHEETS
12	Ora	73	10.7/11.6	1	51

ACNH-P073(100)E

STATE OF CALIFORNIA
DEPARTMENT OF TRANSPORTATION

PROJECT PLANS FOR CONSTRUCTION ON
STATE HIGHWAY
IN ORANGE COUNTY
IN LAGUNA NIGUEL
FROM PASEO DE COLINAS
TO GREENFIELD DRIVE

To be supplemented by Standard Plans dated 2010

INDEX OF PLANS

SHEET No.	DESCRIPTION
1	TITLE AND LOCATION MAP
2	TYPICAL CROSS SECTIONS
3	LAYOUTS
4	TEMPORARY WATER POLLUTION CONTROL PLAN
5-6	DRAINAGE PLANS AND QUANTITIES
7-12	TRAFFIC HANDLING PLANS AND QUANTITIES
13-17	PAVEMENT DELINEATION PLANS, DETAILS AND QUANTITIES
18	SUMMARY OF QUANTITIES
19	PLANT LIST PLANS
20-21	PLANTING PLANS
22-24	IRRIGATION PLANS AND QUANTITIES
25	SPRINKLER SCHEDULE

STRUCTURE PLANS

26-51	RW 488M (RETROFIT-SHEAR PILE WALL)

THE STANDARD PLANS LIST APPLICABLE TO THIS CONTRACT IS INCLUDED IN THE NOTICE TO BIDDERS AND SPECIAL PROVISIONS BOOK.

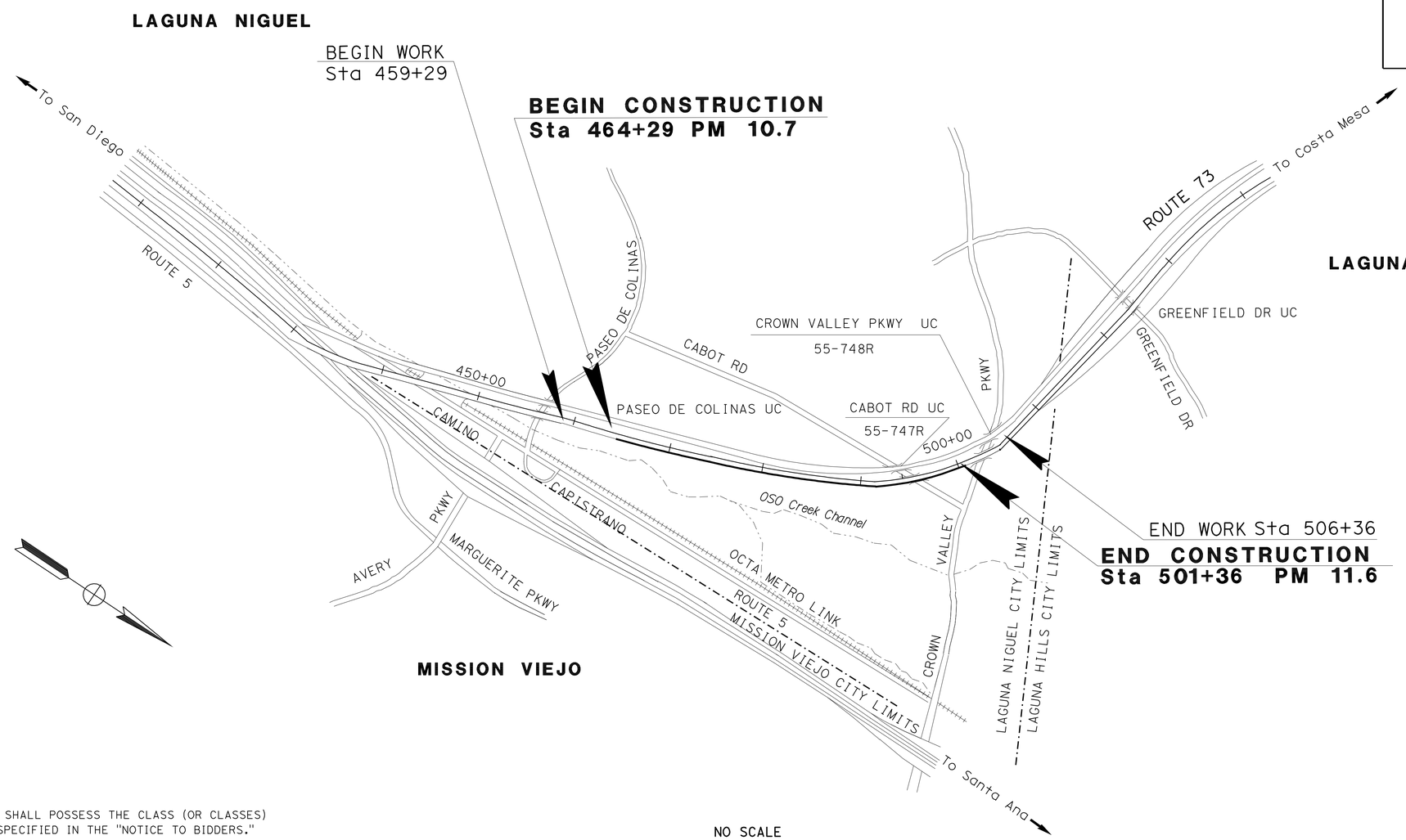

NO SCALE

THE CONTRACTOR SHALL POSSESS THE CLASS (OR CLASSES) OF LICENSE AS SPECIFIED IN THE "NOTICE TO BIDDERS."

PROJECT MANAGER: KAMRAN MAZHAR

DESIGN ENGINEER: ALMA OLGUIN

PROJECT ENGINEER REGISTERED CIVIL ENGINEER — DATE 05-11-12

REGISTERED PROFESSIONAL ENGINEER — ALMA OLGUIN — No. C50373 — Exp. 6/30/13 — CIVIL — STATE OF CALIFORNIA

June 11, 2011
PLANS APPROVAL DATE

THE STATE OF CALIFORNIA OR ITS OFFICERS OR AGENTS SHALL NOT BE RESPONSIBLE FOR THE ACCURACY OR COMPLETENESS OF SCANNED COPIES OF THIS PLAN SHEET.

CONTRACT No.	12-0M5504
PROJECT ID	1212000110

LAST REVISION 05-10-12

DATE PLOTTED => 25-JUN-2012
TIME PLOTTED => 1051

Dist	COUNTY	ROUTE	POST MILES TOTAL PROJECT	SHEET No.	TOTAL SHEETS
12	Ora	73	10.7/11.6	2	51

REGISTERED CIVIL ENGINEER 05-11-12 DATE

6-11-12
PLANS APPROVAL DATE

REGISTERED PROFESSIONAL ENGINEER
DUNG THANH PHAN
No. C77219
Exp. 6/30/13
STATE OF CALIFORNIA

THE STATE OF CALIFORNIA OR ITS OFFICERS OR AGENTS SHALL NOT BE RESPONSIBLE FOR THE ACCURACY OR COMPLETENESS OF SCANNED COPIES OF THIS PLAN SHEET.

NOTES:

1. DIMENSIONS OF THE STRUCTURAL SECTIONS ARE SUBJECT TO TOLERANCES SPECIFIED IN THE STANDARD SPECIFICATIONS.

Exist STRUCTURE SECTION :

A
- 0.60' AC (TYPE A)
- 0.25' ATPB' LCB
- 0.70' CL2 AB
- 2.45' CL4 AS

STRUCTURE SECTION TYPES:

1 — 0.40' HMA (TYPE A)

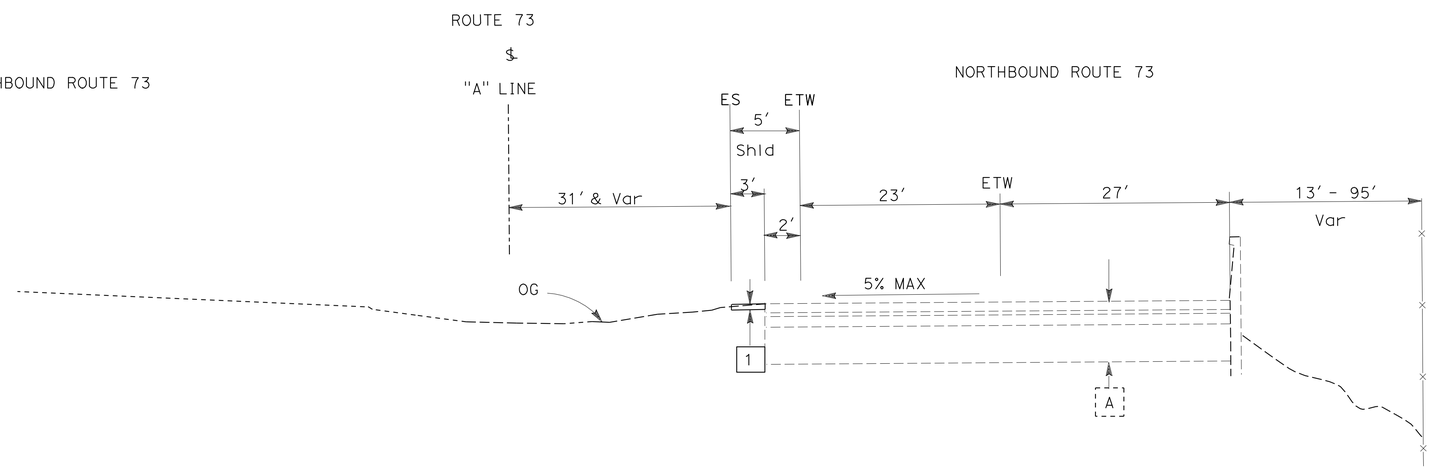

ROUTE 73 NB

"A" Sta 482+90 TO "A" Sta 492+00

TYPICAL CROSS SECTIONS

NO SCALE

X-1

STATE OF CALIFORNIA - DEPARTMENT OF TRANSPORTATION
Caltrans® DESIGN DIVISION

FUNCTIONAL SUPERVISOR: KAMRAN MAZHAR
CALCULATED-DESIGNED BY: DUNG PHAN
CHECKED BY: ALMA OLGUIN
REVISED BY / DATE REVISED

LAST REVISION 11-22-10
DATE PLOTTED => 16-JUN-2012
TIME PLOTTED => 11:24

Dist	COUNTY	ROUTE	POST MILES TOTAL PROJECT	SHEET No.	TOTAL SHEETS
12	Ora	73	10.7/11.6	3	51

REGISTERED CIVIL ENGINEER 05-11-12 DATE

6-11-12
PLANS APPROVAL DATE

REGISTERED PROFESSIONAL ENGINEER DUNG THANH PHAN No. C77219 Exp. 6/30/13 CIVIL STATE OF CALIFORNIA

THE STATE OF CALIFORNIA OR ITS OFFICERS OR AGENTS SHALL NOT BE RESPONSIBLE FOR THE ACCURACY OR COMPLETENESS OF SCANNED COPIES OF THIS PLAN SHEET.

NOTES:

1. FOR ACCURATE RIGHT OF WAY DATA, CONTACT RIGHT OF WAY ENGINEERING AT THE DISTRICT OFFICE
2. AFTER COMPLETION OF SEGMENT "C", RECONSTRUCT CHAIN LINK FENCE

ABBRVIATION

TCE (EXCLUSIVE AREA) : TCE FOR CALTRANS/CONTRACTOR USE ONLY
TCE (NON EXCLUSIVE AREA): TCE FOR CALTRANS/CONTRACTOR AND COSTCO USE ONLY

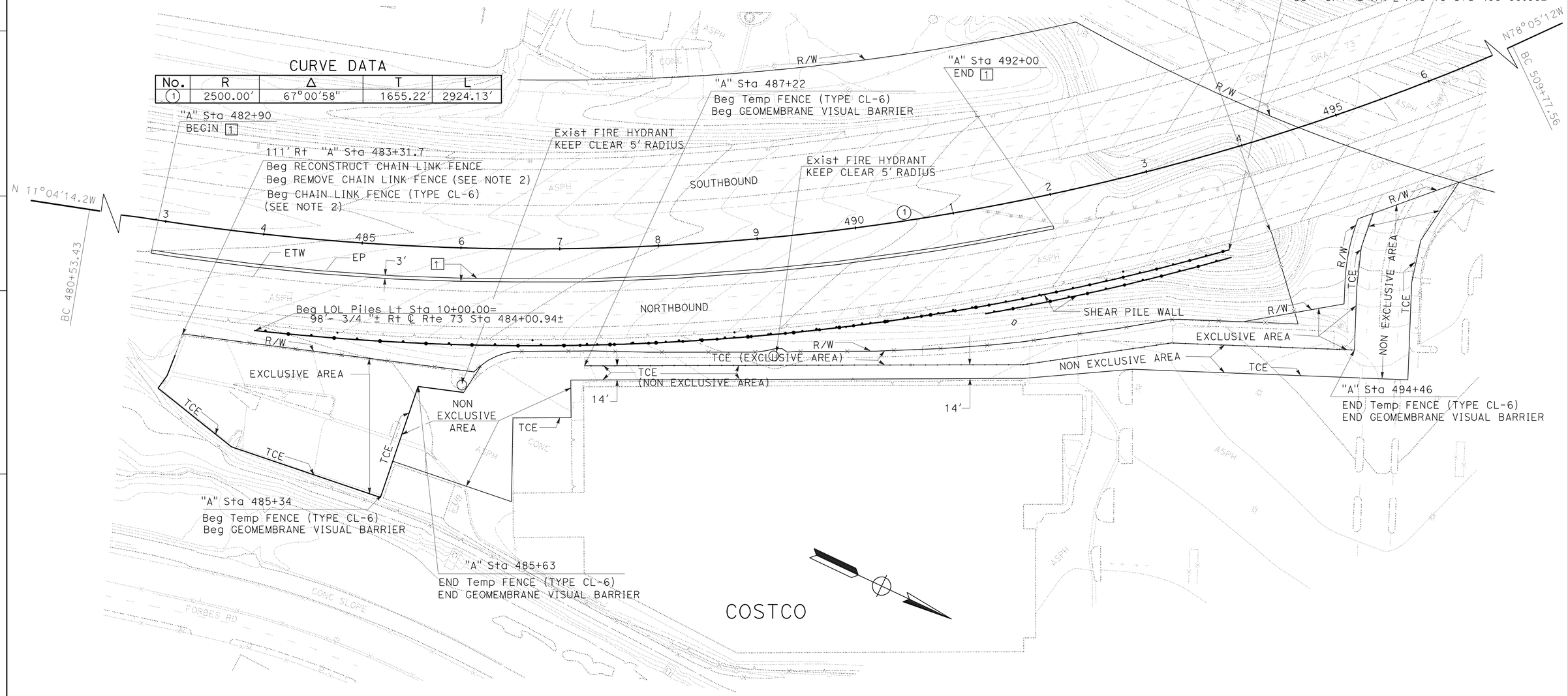

LAYOUT

SCALE: 1" = 50′

L-1

STATE OF CALIFORNIA - DEPARTMENT OF TRANSPORTATION
Caltrans® DESIGN DIVISION

FUNCTIONAL SUPERVISOR: KAMRAN MAZHAR
CALCULATED-DESIGNED BY: DUNG PHAN
CHECKED BY: ALMA OLGUIN
REVISED BY
DATE REVISED

LAST REVISION 00-00-00 | DATE PLOTTED => 19-JUN-2012 | TIME PLOTTED => 11:05

Dist	COUNTY	ROUTE	POST MILES TOTAL PROJECT	SHEET No.	TOTAL SHEETS
12	Ora	73	10.7/11.6	4	51

Seyed Dadras 05-11-12
REGISTERED CIVIL ENGINEER DATE

6-11-12
PLANS APPROVAL DATE

REGISTERED PROFESSIONAL ENGINEER SEYED DADRAS No. C 41989 Exp 03/31/14 CIVIL STATE OF CALIFORNIA

THE STATE OF CALIFORNIA OR ITS OFFICERS OR AGENTS SHALL NOT BE RESPONSIBLE FOR THE ACCURACY OR COMPLETENESS OF SCANNED COPIES OF THIS PLAN SHEET.

LEGEND:

- TEMPORARY HYDRAULIC MULCH
- TEMPORARY DRAINAGE INLET PROTECTION (TYPE 3A)
- TFR TEMPORARY FIBER ROLL
- TEMPORARY CONSTRUCTION ENTRANCE (TYPE 2)

NOTE: FOR MORE DETAIL, SEE NEW STANDARD PLAN NSP T62

TEMPORARY WATER POLLUTION CONTROL QUANTITIES

STATION	OFFSET	TEMPORARY DRAINAGE INLET PROTECTION (TYPE 3A)	TEMPORARY FIBER ROLL	TEMPORARY CONSTRUCTION ENTRANCE (TYPE 2)	TEMPORARY HYDRAULIC MULCH
		(EA)	(LF)	(EA)	(SQYD)
483+21.13	161.19	1	907	1	3089
494+39.74	203.40	1			
TOTAL		2	907	1	3089

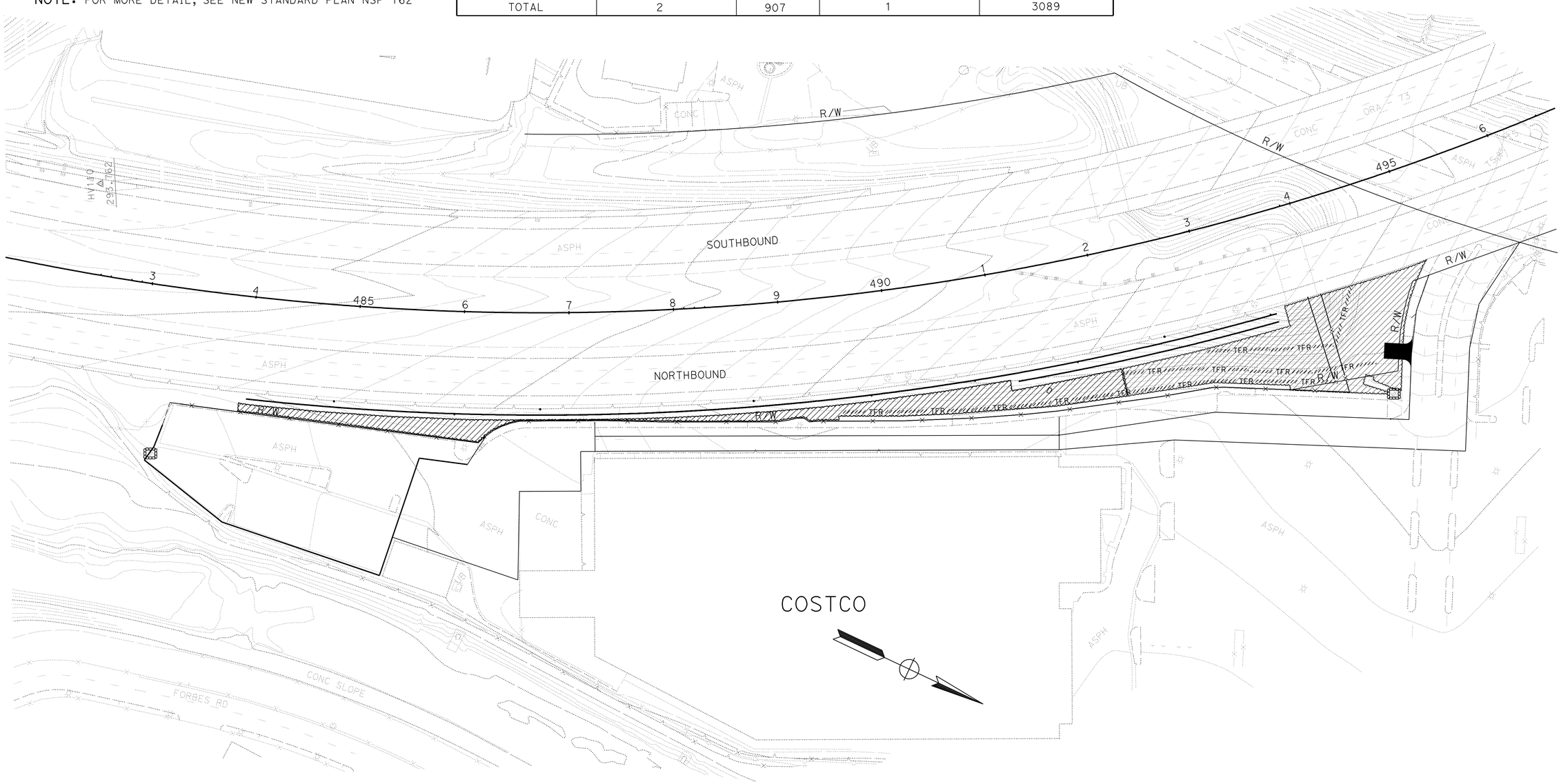

TEMPORARY WATER POLLUTION CONTROL PLAN

SCALE: 1" = 50'

WPC-1

STATE OF CALIFORNIA - DEPARTMENT OF TRANSPORTATION
Caltrans® DESIGN DIVISION

FUNCTIONAL SUPERVISOR: KAMRAN MAZHAR
CALCULATED-DESIGNED BY: DUNG PHAN
CHECKED BY: ALMA OLGUIN
REVISED BY
DATE REVISED

LAST REVISION 00-00-00
DATE PLOTTED => 16-JUN-2012
TIME PLOTTED => 11:24

Dist	COUNTY	ROUTE	POST MILES TOTAL PROJECT	SHEET No.	TOTAL SHEETS
12	Ora	73	10.7/11.6	5	51

REGISTERED CIVIL ENGINEER 05-11-12 DATE

6-11-12
PLANS APPROVAL DATE

REGISTERED PROFESSIONAL ENGINEER MY-LINH DUVAN No. C 54928 Exp. 06/30/12 CIVIL STATE OF CALIFORNIA

THE STATE OF CALIFORNIA OR ITS OFFICERS OR AGENTS SHALL NOT BE RESPONSIBLE FOR THE ACCURACY OR COMPLETENESS OF SCANNED COPIES OF THIS PLAN SHEET.

NOTES:

1. FOR ACCURATE RIGHT OF WAY DATA, CONTACT RIGHT OF WAY ENGINEERING AT THE DISTRICT OFFICE.
2. USE DETAILS FOR 12" CULVERT TO CONSTRUCT HEADWALL

LEGEND:

DRAINAGE SYSTEM

DRAINAGE UNIT

ABBREVIATION:

/ WITH

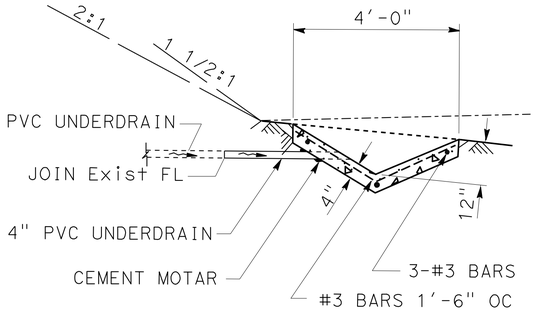

TYPE B DITCH
No Scale

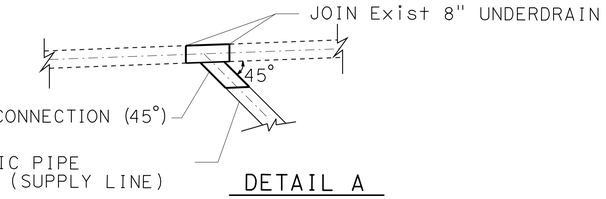

DETAIL A
No Scale

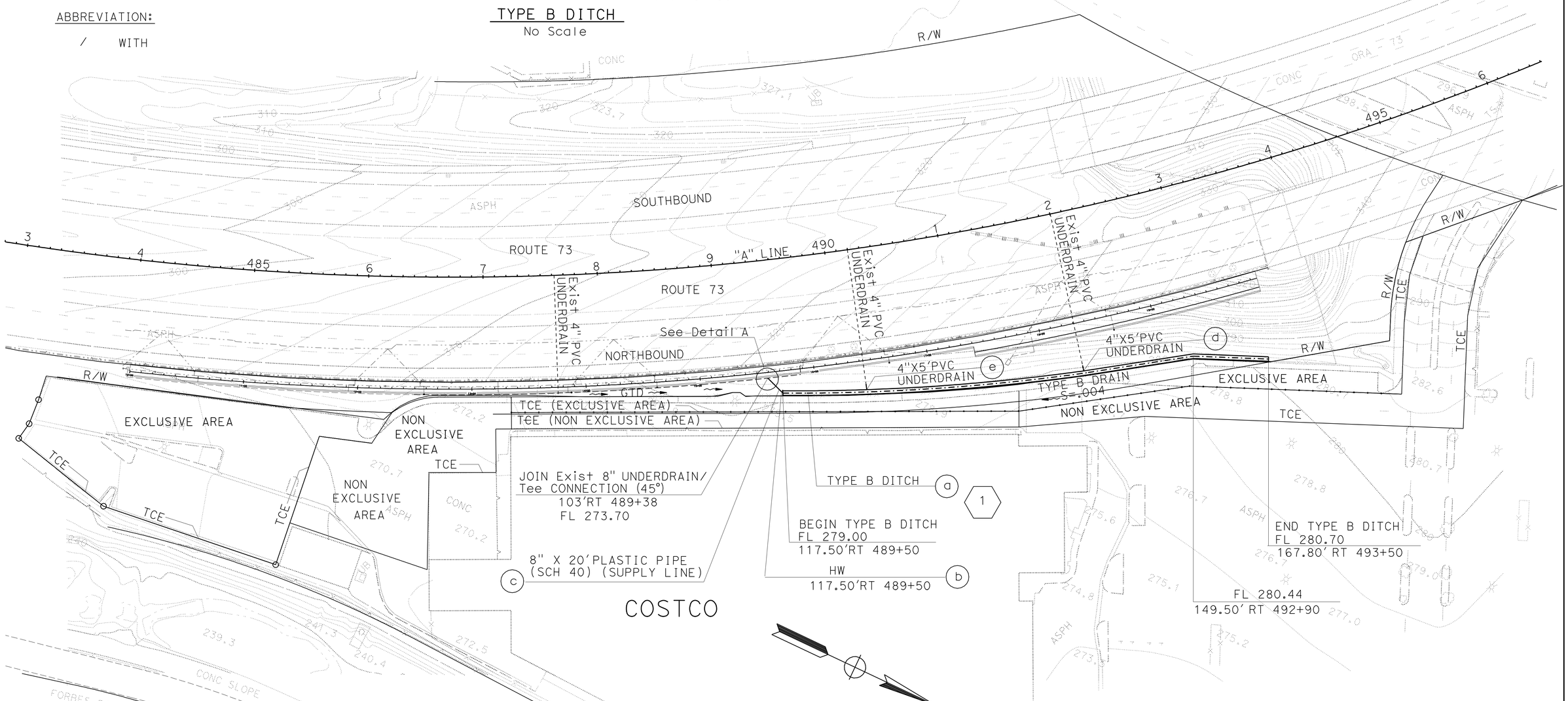

DRAINAGE PLAN

SCALE: 1"=50'

D-1

APPROVED FOR DRAINAGE WORK ONLY

STATE OF CALIFORNIA - DEPARTMENT OF TRANSPORTATION
Caltrans HYDRAULICS

FUNCTIONAL SUPERVISOR: KATHY LOWE

CALCULATED-DESIGNED BY: MY-LINH DUVAN
CHECKED BY: TAN T NGUYEN

REVISED BY | DATE REVISED

LAST REVISION 05-09-12 | DATE PLOTTED => 18-JUN-2012 | TIME PLOTTED => 14:07

Dist	COUNTY	ROUTE	POST MILES TOTAL PROJECT	SHEET No.	TOTAL SHEETS
12	Ora	73	10.7/11.6	6	51

REGISTERED CIVIL ENGINEER 05-11-12 DATE

6-11-12
PLANS APPROVAL DATE

REGISTERED PROFESSIONAL ENGINEER
MY-LINH DUVAN
No. C 54928
Exp.06/30/12
CIVIL
STATE OF CALIFORNIA

THE STATE OF CALIFORNIA OR ITS OFFICERS OR AGENTS SHALL NOT BE RESPONSIBLE FOR THE ACCURACY OR COMPLETENESS OF SCANNED COPIES OF THIS PLAN SHEET.

DRAINAGE QUANTITIES

DRAINAGE PLAN SHEET NUMBER	DRAINAGE SYSTEM NUMBER	DRAINAGE UNIT	MINOR CONCRETE (MINOR STRUCTURE) CY	CONCRETE (DITCH LINING) CY	8" PLASTIC PIPE (SCHEDULE 40) (SUPPLY LINE) LF	4" PLASTIC PIPE UNDERDRAIN LF	DITCH EXCAVATION CY	Max COVER FT	PIPE JOINT CLASSIFICATION	DESCRIPTION	STATION	DRAINAGE SYSTEM NUMBER	DRAINAGE UNIT
D-1	1	a		19.24			40			TYPE B DRAIN	FROM 489+50 TO 493+50 "A" LINE	1	a
		b	0.60							HW	117.50' Rt 489+50 "A" LINE		b
		c			20			8.6	S	8" X 20' PLASTIC PIPE (SCHEDULE 40) (SUPPLY LINE)			c
		d				5			S	4" X 5' PVC UNDERDRAIN	492+00 "A" LINE		d
		e				5			S	4" X 5' PVC UNDERDRAIN	490+20 "A" LINE		e
SHEET TOTAL			0.60	19.24	20	10	40						

STATE OF CALIFORNIA - DEPARTMENT OF TRANSPORTATION
Caltrans
HYDRAULICS

FUNCTIONAL SUPERVISOR: KATHY LOWE
CALCULATED-DESIGNED BY: MY-LINH DUVAN
CHECKED BY: TAN T NGUYEN
REVISED BY
DATE REVISED

DRAINAGE QUANTITIES

DQ-1

LAST REVISION 05-09-12
DATE PLOTTED => 21-JUN-2012
TIME PLOTTED => 11:03

Dist	COUNTY	ROUTE	POST MILES TOTAL PROJECT	SHEET No.	TOTAL SHEETS
12	Ora	73	10.7/11.6	7	51

REGISTERED CIVIL ENGINEER 05-11-12 DATE

6-11-12
PLANS APPROVAL DATE

REGISTERED PROFESSIONAL ENGINEER DUNG THANH PHAN No. C77219 Exp. 6/30/13 CIVIL STATE OF CALIFORNIA

THE STATE OF CALIFORNIA OR ITS OFFICERS OR AGENTS SHALL NOT BE RESPONSIBLE FOR THE ACCURACY OR COMPLETENESS OF SCANNED COPIES OF THIS PLAN SHEET.

NOTES:

1. FOR ACCURATE RIGHT OF WAY DATA, CONTACT RIGHT OF WAY ENGINEERING AT THE DISTRICT OFFICE
2. EXACT LOCATIONS FOR PAVEMENT MARKING SHALL BE DETERMINE BY THE ENGINEER.
3. 20:1 TAPER SHALL BE USED AT THE END OF ALL TEMPORARY RAILING UNLESS OTHERWISE NOTED.

STATIONARY MOUNTED CONSTRUCTION AREA SIGNS

SIGN No	SIGN CODE	PANEL SIZE	SIGN MESSAGE	No. OF POSTS & POST SIZE	No. OF SIGNS
1	W20-1	4' X 4'	ROAD WORK AHEAD	(1) - 4" X 6"	1
2	W20-5	4' X 4'	R+ LANE CLOSED AHEAD	(1) - 4" X 6"	1
3	W4-2	4' X 4'	RIGHT LANE END	(1) - 4" X 6"	1
4	G20-2	5' X 2'	END ROAD WORK	(1) - 4" X 6"	1

LEGEND:

- CHANNELIZER (SURFACE MOUNTED)
- TEMPORARY CRASH CUSHION MODULE, ARRAY PER PLAN
- X PAINT TRAFFIC STRIPE (2-COAT) DETAIL No.
- PAINT PAVEMENT MARKING (2-COAT)
- END OF PAVEMENT DETAIL
- BEGIN OF PAVEMENT DETAIL
- X CONSTRUCTION AREA SIGN
- CONSTRUCTION AREA SIGN, 1-POST

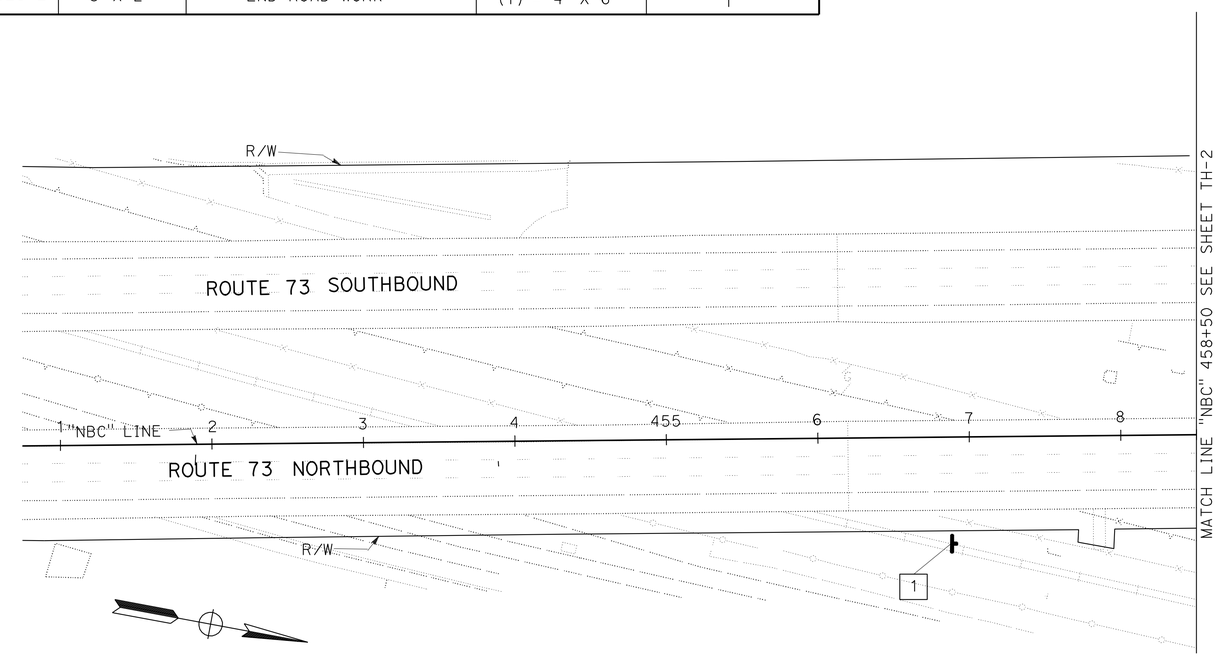

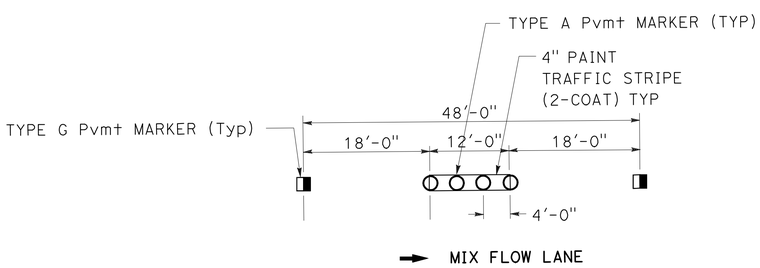

DETAIL 11/13

TRAFFIC HANDLING PLAN

SCALE: 1"=50'

APPROVED FOR TRAFFIC HANDLING WORK ONLY

TH-1

STATE OF CALIFORNIA - DEPARTMENT OF TRANSPORTATION
Caltrans DESIGN DIVISION

FUNCTIONAL SUPERVISOR: KAMRAN MAZHAR
CALCULATED-DESIGNED BY: DUNG PHAN
CHECKED BY: ALMA OLGUIN
REVISED BY / DATE REVISED

LAST REVISION 00-00-00
DATE PLOTTED => 18-JUN-2012
TIME PLOTTED => 14:01

Dist	COUNTY	ROUTE	POST MILES TOTAL PROJECT	SHEET No.	TOTAL SHEETS
12	Ora	73	10.7/11.6	8	51

REGISTERED CIVIL ENGINEER 05-11-12 DATE

6-11-12
PLANS APPROVAL DATE

REGISTERED PROFESSIONAL ENGINEER
DUNG THANH PHAN
No. C77219
Exp. 6/30/13
CIVIL
STATE OF CALIFORNIA

THE STATE OF CALIFORNIA OR ITS OFFICERS OR AGENTS SHALL NOT BE RESPONSIBLE FOR THE ACCURACY OR COMPLETENESS OF SCANNED COPIES OF THIS PLAN SHEET.

NOTE:

FOR ACCURATE RIGHT OF WAY DATA, CONTACT
RIGHT OF WAY ENGINEERING AT THE DISTRICT OFFICE.

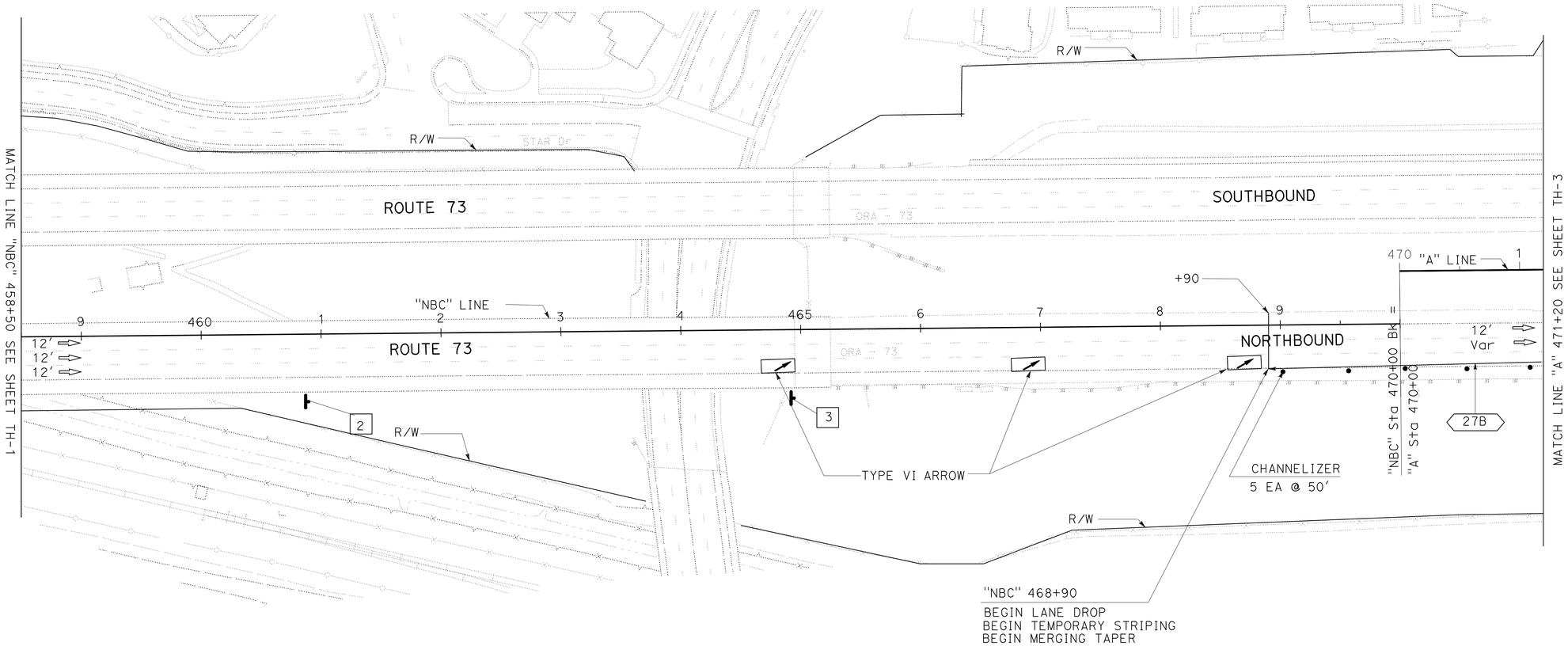

TRAFFIC HANDLING PLAN

SCALE: 1"=50'

TH-2

APPROVED FOR TRAFFIC HANDLING WORK ONLY

STATE OF CALIFORNIA - DEPARTMENT OF TRANSPORTATION
Caltrans
DESIGN DIVISION

FUNCTIONAL SUPERVISOR: KAMRAN MAZHAR
CALCULATED-DESIGNED BY: DUNG PHAN
CHECKED BY: ALMA OLGUIN
REVISED BY
DATE REVISED

LAST REVISION 00-00-00
DATE PLOTTED => 16-JUN-2012
TIME PLOTTED => 11:24

Dist	COUNTY	ROUTE	POST MILES TOTAL PROJECT	SHEET No.	TOTAL SHEETS
12	Ora	73	10.7/11.6	9	51

REGISTERED CIVIL ENGINEER 05-11-12 DATE

6-11-12
PLANS APPROVAL DATE

REGISTERED PROFESSIONAL ENGINEER
DUNG THANH PHAN
No. C77219
Exp. 6/30/13
CIVIL
STATE OF CALIFORNIA

THE STATE OF CALIFORNIA OR ITS OFFICERS OR AGENTS SHALL NOT BE RESPONSIBLE FOR THE ACCURACY OR COMPLETENESS OF SCANNED COPIES OF THIS PLAN SHEET.

NOTE:

FOR ACCURATE RIGHT OF WAY DATA, CONTACT
RIGHT OF WAY ENGINEERING AT THE DISTRICT OFFICE.

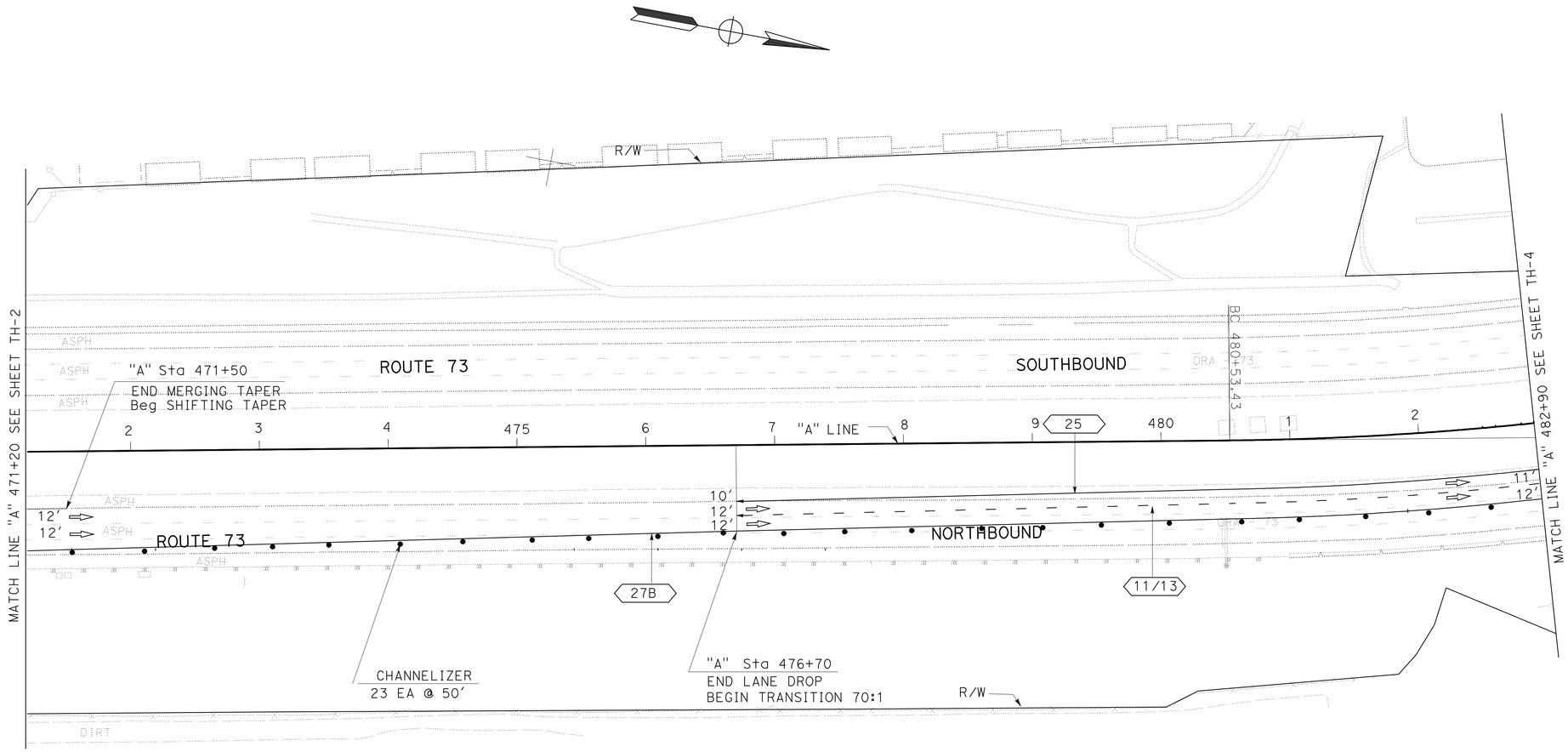

TRAFFIC HANDLING PLAN

SCALE: 1"=50'

APPROVED FOR TRAFFIC HANDLING WORK ONLY

TH-3

STATE OF CALIFORNIA - DEPARTMENT OF TRANSPORTATION
Caltrans®
DESIGN DIVISION

FUNCTIONAL SUPERVISOR: KAMRAN MAZHAR
CALCULATED-DESIGNED BY: DUNG PHAN
CHECKED BY: ALMA OLGUIN
REVISED BY
DATE REVISED

LAST REVISION 00-00-00
DATE PLOTTED => 16-JUN-2012
TIME PLOTTED => 11:24

Dist	COUNTY	ROUTE	POST MILES TOTAL PROJECT	SHEET No.	TOTAL SHEETS
12	Ora	73	10.7/11.6	10	51

REGISTERED CIVIL ENGINEER 06-06-12 DATE

6-11-12
PLANS APPROVAL DATE

REGISTERED PROFESSIONAL ENGINEER DUNG THANH PHAN No. C77219 Exp. 6/30/13 CIVIL STATE OF CALIFORNIA

THE STATE OF CALIFORNIA OR ITS OFFICERS OR AGENTS SHALL NOT BE RESPONSIBLE FOR THE ACCURACY OR COMPLETENESS OF SCANNED COPIES OF THIS PLAN SHEET.

NOTE:

FOR ACCURATE RIGHT OF WAY DATA, CONTACT RIGHT OF WAY ENGINEERING AT THE DISTRICT OFFICE.

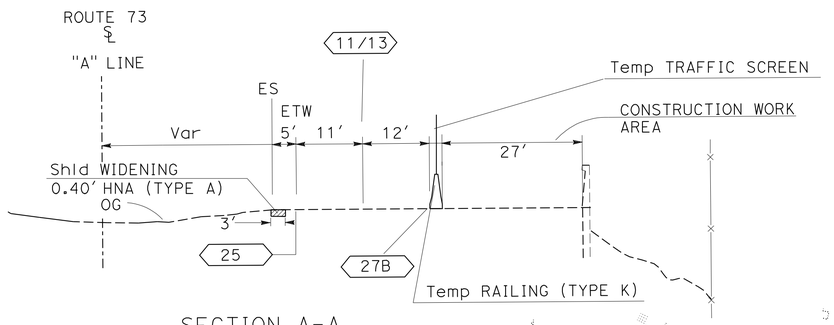

SECTION A-A
No Scale

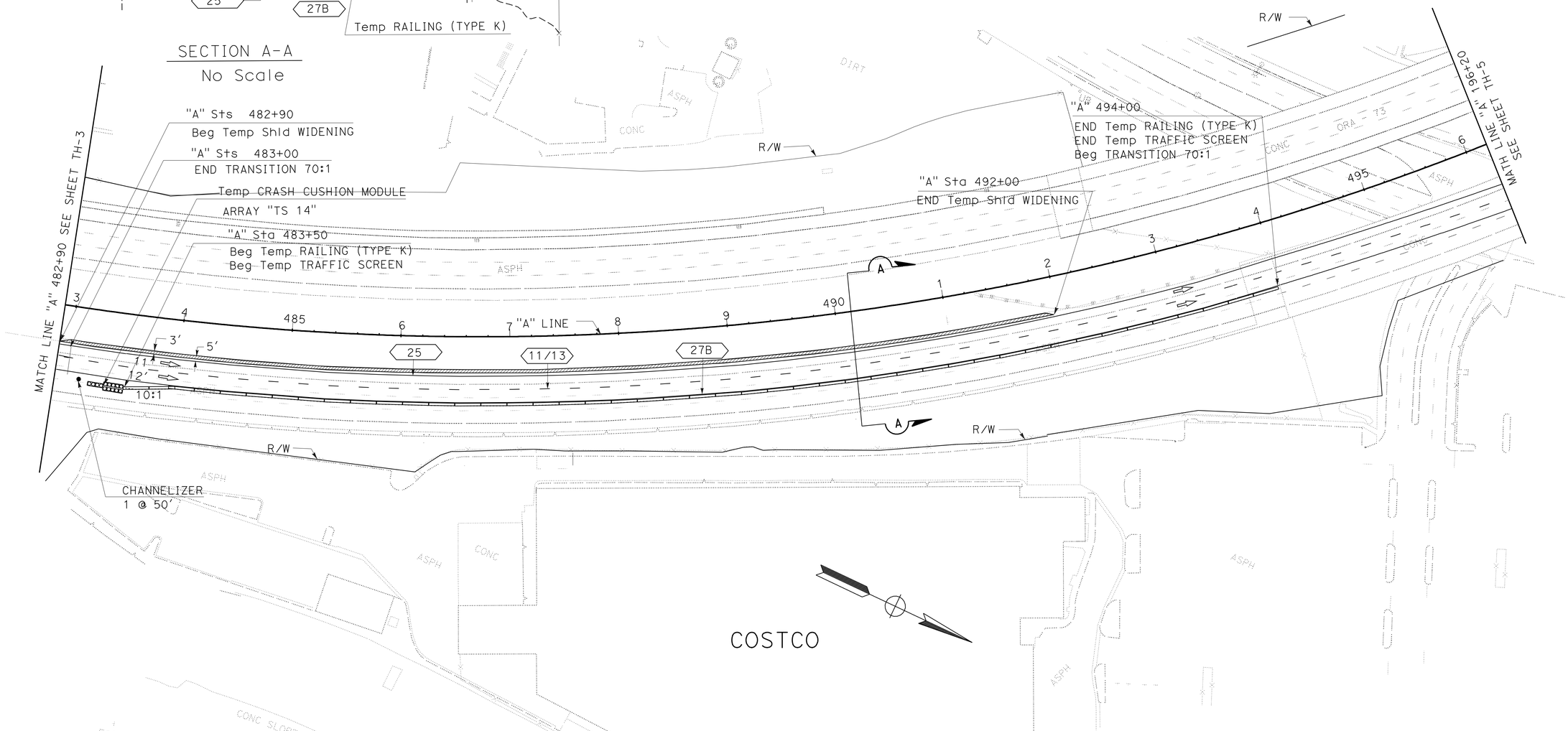

TRAFFIC HANDLING PLAN

SCALE: 1"=50'

APPROVED FOR TRAFFIC HANDLING WORK ONLY

TH-4

STATE OF CALIFORNIA - DEPARTMENT OF TRANSPORTATION
Caltrans® DESIGN DIVISION

FUNCTIONAL SUPERVISOR: KAMRAN MAZHAR
CALCULATED-DESIGNED BY: DUNG PHAN
CHECKED BY: ALMA OLGUIN
REVISED BY
DATE REVISED

LAST REVISION 06-06-12 | DATE PLOTTED => 18-JUN-2012 | TIME PLOTTED => 14:01

Dist	COUNTY	ROUTE	POST MILES TOTAL PROJECT	SHEET No.	TOTAL SHEETS
12	Ora	73	10.7/11.6	11	51

REGISTERED CIVIL ENGINEER 05-11-12 DATE

6-11-12
PLANS APPROVAL DATE

REGISTERED PROFESSIONAL ENGINEER
DUNG THANH PHAN
No. C77219
Exp. 6/30/13
CIVIL
STATE OF CALIFORNIA

THE STATE OF CALIFORNIA OR ITS OFFICERS OR AGENTS SHALL NOT BE RESPONSIBLE FOR THE ACCURACY OR COMPLETENESS OF SCANNED COPIES OF THIS PLAN SHEET.

NOTE:

FOR ACCURATE RIGHT OF WAY DATA, CONTACT RIGHT OF WAY ENGINEERING AT THE DISTRICT OFFICE.

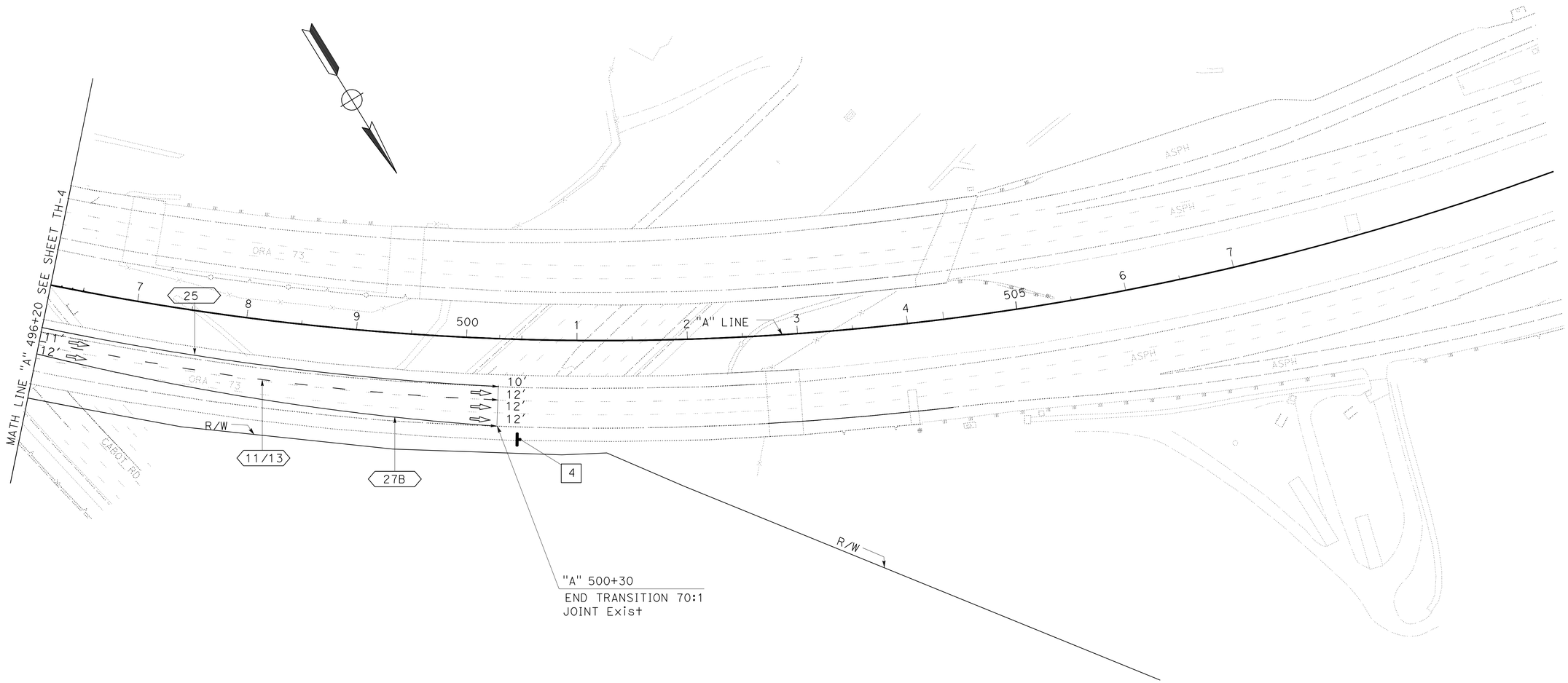

TRAFFIC HANDLING PLAN

SCALE: 1"=50'

TH-5

APPROVED FOR TRAFFIC HANDLING WORK ONLY

STATE OF CALIFORNIA - DEPARTMENT OF TRANSPORTATION
Caltrans
DESIGN DIVISION

FUNCTIONAL SUPERVISOR: KAMRAN MAZHAR
CALCULATED-DESIGNED BY: DUNG PHAN
CHECKED BY: ALMA OLGUIN
REVISED BY
DATE REVISED

LAST REVISION 00-00-00
DATE PLOTTED => 16-JUN-2012
TIME PLOTTED => 11:24

Dist	COUNTY	ROUTE	POST MILES TOTAL PROJECT	SHEET No.	TOTAL SHEETS
12	Ora	73	10.7/11.6	12	51

REGISTERED CIVIL ENGINEER DATE 05-11-12

6-11-12
PLANS APPROVAL DATE

REGISTERED PROFESSIONAL ENGINEER DUNG THANH PHAN No. C77219 Exp. 6/30/13 CIVIL STATE OF CALIFORNIA

THE STATE OF CALIFORNIA OR ITS OFFICERS OR AGENTS SHALL NOT BE RESPONSIBLE FOR THE ACCURACY OR COMPLETENESS OF SCANNED COPIES OF THIS PLAN SHEET.

TEMPORARY TRAFFIC QUANTITIES

SHEET NO	STATION LIMITS	DETAIL NO	PAVEMENT MARKER NON-REFLECTIVE (TYPE A)	PAVEMENT MARKER RETROREFLECTIVE (TYPE G)	PAVEMENT MARKER RETROREFLECTIVE (TYPE H)	PAINT TRAFFIC STRIPE (2- COAT) 4" BROKEN WHITE	PAINT TRAFFIC STRIPE (2- COAT) 4" SOLID WHITE	PAINT TRAFFIC STRIPE (2- COAT) 4" SOLID YELLOW	PAINT PAVEMENT MARKING (2- COAT)	CHANNELIZER (SURFACE MOUNTED)	Temp RAILING (TYPE K)	Temp TRAFFIC SCREEN	Temp CRASH CUSHION MODULE	REMOVE PAINTED TRAFFIC STRIPE BROKEN	REMOVE PAINTED TRAFFIC STRIPE SOLID	REMOVE PAVEMENT MARKER	REMOVE PAINTED PAVEMENT MARKING
			EA	EA	EA	LF	LF	LF	SQFT	EA	LF	LF	EA	LF	LF	EA	SQFT
TH-2	"NBC " Sta 464+90 TO 468+90	ARROW							126								126
	"NBC " Sta 468+90 TO 470+00	27B					110								110		
	"A " Sta 470+00 TO 471+20	27B					120								120		
	"NBC " Sta 468+90 TO 470+00									2							
	"A " Sta 470+00 TO 471+20									3							
TH-3	"A " Sta 476+70 TO 482+90	25			14			620							620	14	
	"A " Sta 476+70 TO 482+90	11/13	52	27		620								155		79	
	"A " Sta 471+20 TO 482+90	27B					1170								1170		
	"A " Sta 471+20 TO 482+90									23							
TH-4	"A " Sta 482+90 TO 483+50									1							
	"A " Sta 483+50												14				
	"A " Sta 483+50 TO 494+00										1060	1050					
	"A " Sta 482+90 TO 496+20	25			29			1330							1330	29	
	"A " Sta 482+90 TO 496+20	11/13	112	57		1330								332		169	
	"A " Sta 482+90 TO 496+20	27B					1330								1330		
TH-5	"A " Sta 496+20 TO 500+30	25			10			410							410	10	
	"A " Sta 496+20 TO 500+30	11/13	36	19		410								103		55	
	"A " Sta 496+20 TO 500+30	27B					410								410		
SUB TOTAL SHEET THQ-1			200	103	53	2360	3140	2360					14	590	5500	356	
SUB TOTAL			200	156		2360	3140	2360	126	29	1060	1050	14	6090		356	126
TOTAL			200*	156 *		7860			126	29	1060	1050	14	6090		356 *	126

(*) FOR GRAND TOTAL OF PAVEMENT MARKER, AND REMOVE PAVEMENT MARKER , SEE PDQ-1

TRAFFIC HANDLING QUANTITIES

THQ-1

STATE OF CALIFORNIA - DEPARTMENT OF TRANSPORTATION
Caltrans® DESIGN DIVISION

FUNCTIONAL SUPERVISOR: KAMRAN MAZHAR
CALCULATED-DESIGNED BY: DUNG PHAN
CHECKED BY: ALMA OLGUIN
REVISED BY
DATE REVISED

LAST REVISION 11-19-10 | DATE PLOTTED => 18-JUN-2012 | TIME PLOTTED => 14:01

Dist	COUNTY	ROUTE	POST MILES TOTAL PROJECT	SHEET No.	TOTAL SHEETS
12	Ora	73	10.7/11.6	13	51

REGISTERED CIVIL ENGINEER 05-11-12 DATE

6-11-12
PLANS APPROVAL DATE

REGISTERED PROFESSIONAL ENGINEER DUNG THANH PHAN No. C77219 Exp. 6/30/13 CIVIL STATE OF CALIFORNIA

THE STATE OF CALIFORNIA OR ITS OFFICERS OR AGENTS SHALL NOT BE RESPONSIBLE FOR THE ACCURACY OR COMPLETENESS OF SCANNED COPIES OF THIS PLAN SHEET.

NOTES:

1. FOR ACCURATE RIGHT OF WAY AND ACCESS DATA, CONTACT RIGHT OF WAY ENGINEERING AT THE DISTRICT OFFICE.
2. EXACT LOCATIONS FOR PAVEMENT MARKINGS TO BE DETERMINED BY THE ENGINEER.

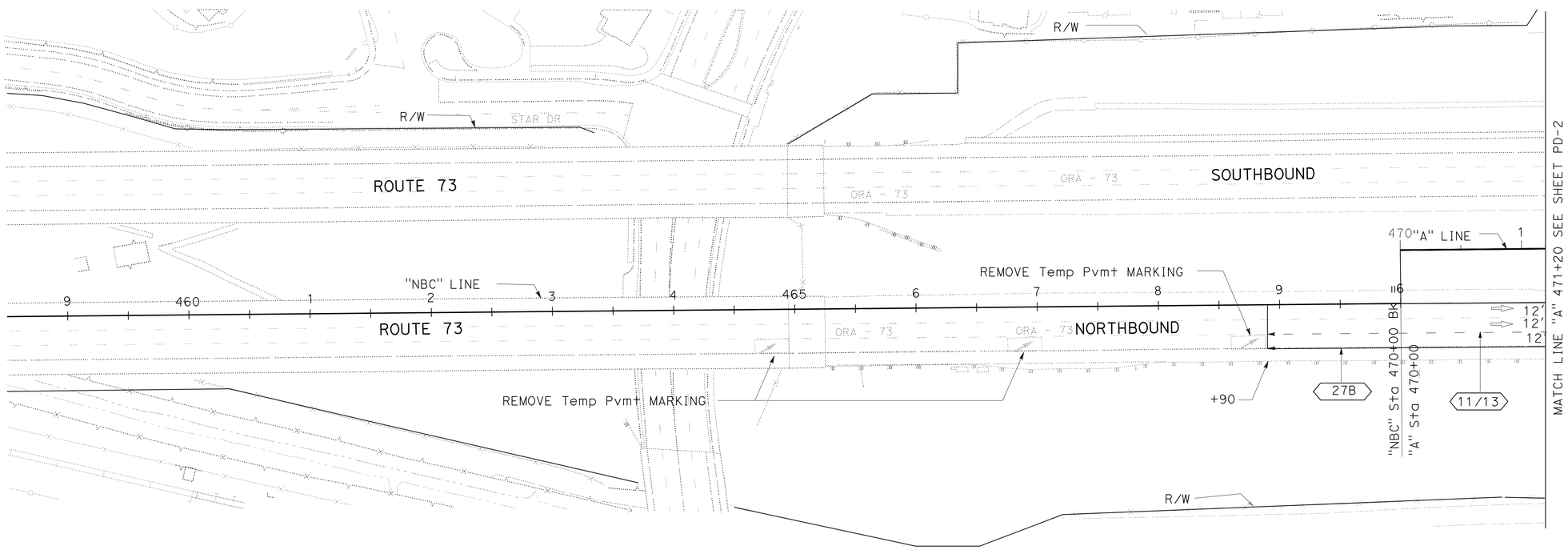

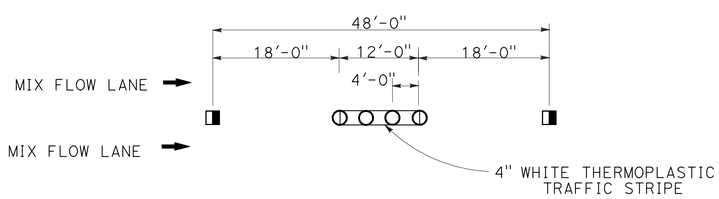

DETAIL 11/13

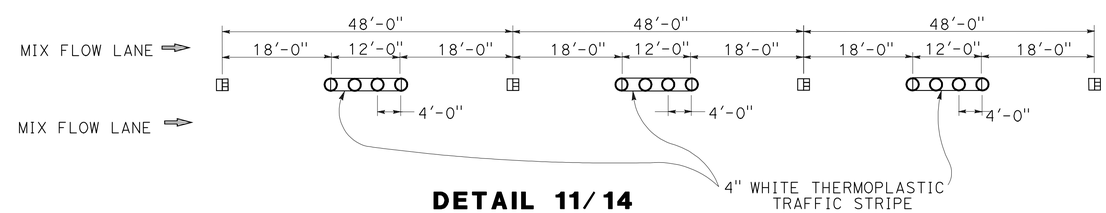

DETAIL 11/14

PAVEMENT DELINEATION PLAN

SCALE: 1"=50'

APPROVED FOR PAVEMENT DELINEATION WORK ONLY

PD-1

STATE OF CALIFORNIA - DEPARTMENT OF TRANSPORTATION
Caltrans®
DESIGN DIVISION

FUNCTIONAL SUPERVISOR: KAMRAN MAZHAR
CALCULATED-DESIGNED BY: DUNG PHAN
CHECKED BY: ALMA OLGUIN
REVISED BY
DATE REVISED

LAST REVISION 00-00-00
DATE PLOTTED => 16-JUN-2012
TIME PLOTTED => 11:24

Dist	COUNTY	ROUTE	POST MILES TOTAL PROJECT	SHEET No.	TOTAL SHEETS
12	Ora	73	10.7/11.6	14	51

REGISTERED CIVIL ENGINEER 05-11-12 DATE

6-11-12
PLANS APPROVAL DATE

REGISTERED PROFESSIONAL ENGINEER
DUNG THANH PHAN
No. C77219
Exp. 6/30/13
CIVIL
STATE OF CALIFORNIA

THE STATE OF CALIFORNIA OR ITS OFFICERS OR AGENTS SHALL NOT BE RESPONSIBLE FOR THE ACCURACY OR COMPLETENESS OF SCANNED COPIES OF THIS PLAN SHEET.

NOTE:

FOR ACCURATE RIGHT OF WAY DATA, CONTACT RIGHT OF WAY ENGINEERING AT THE DISTRICT OFFICE.

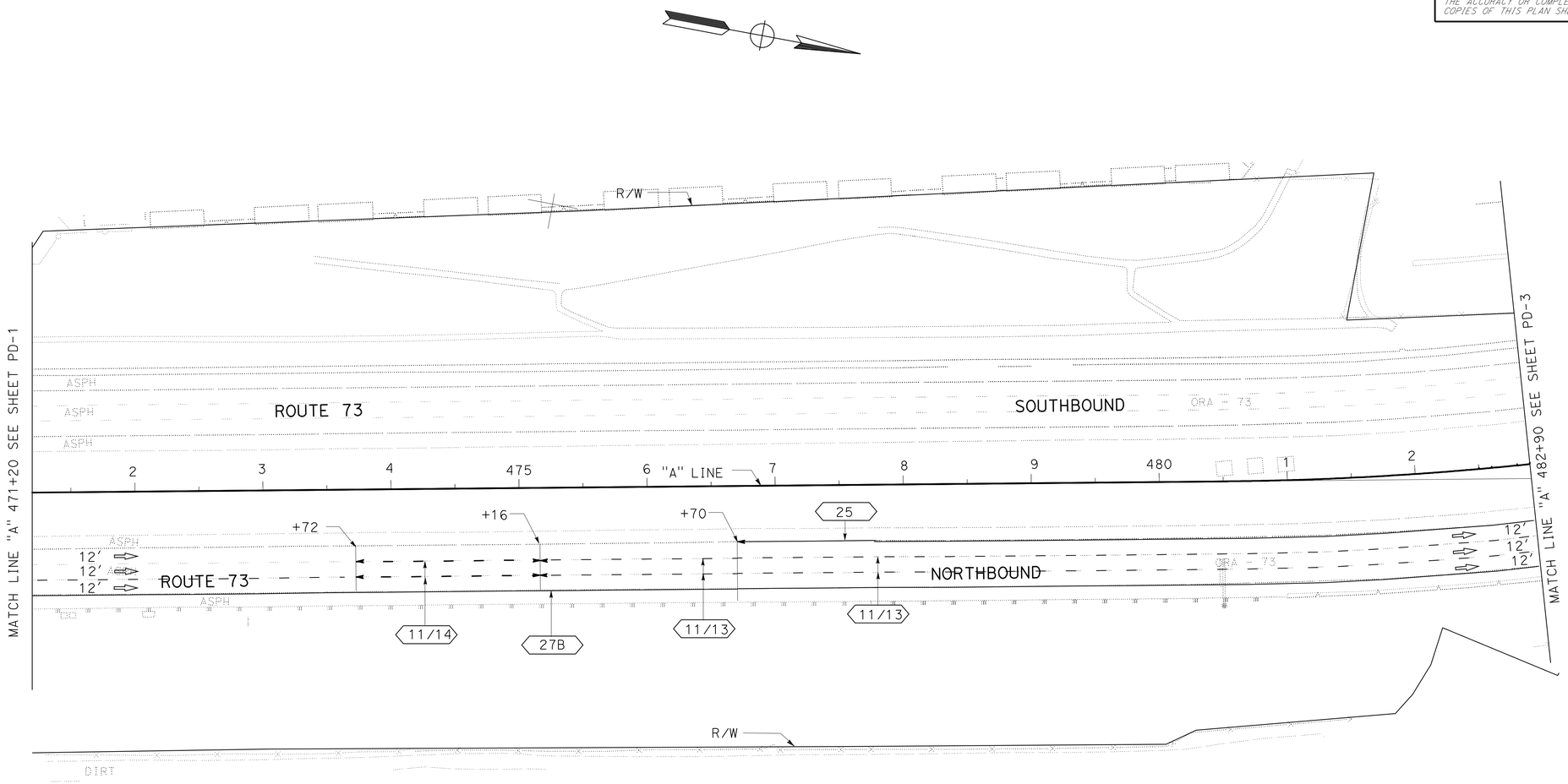

PAVEMENT DELINEATION PLAN

SCALE: 1"=50'

APPROVED FOR PAVEMENT DELINEATION WORK ONLY

PD-2

STATE OF CALIFORNIA - DEPARTMENT OF TRANSPORTATION
Caltrans®
DESIGN DIVISION

FUNCTIONAL SUPERVISOR: KAMRAN MAZHAR
CALCULATED-DESIGNED BY: DUNG PHAN
CHECKED BY: ALMA OLGUIN
REVISED BY
DATE REVISED

LAST REVISION 00-00-00
DATE PLOTTED => 16-JUN-2012
TIME PLOTTED => 11:24

Dist	COUNTY	ROUTE	POST MILES TOTAL PROJECT	SHEET No.	TOTAL SHEETS
12	Ora	73	10.7/11.6	15	51

REGISTERED CIVIL ENGINEER 05-11-12 DATE

6-11-12
PLANS APPROVAL DATE

REGISTERED PROFESSIONAL ENGINEER
DUNG THANH PHAN
No. C77219
Exp. 6/30/13
CIVIL
STATE OF CALIFORNIA

THE STATE OF CALIFORNIA OR ITS OFFICERS OR AGENTS SHALL NOT BE RESPONSIBLE FOR THE ACCURACY OR COMPLETENESS OF SCANNED COPIES OF THIS PLAN SHEET.

NOTE:

FOR ACCURATE RIGHT OF WAY DATA, CONTACT RIGHT OF WAY ENGINEERING AT THE DISTRICT OFFICE.

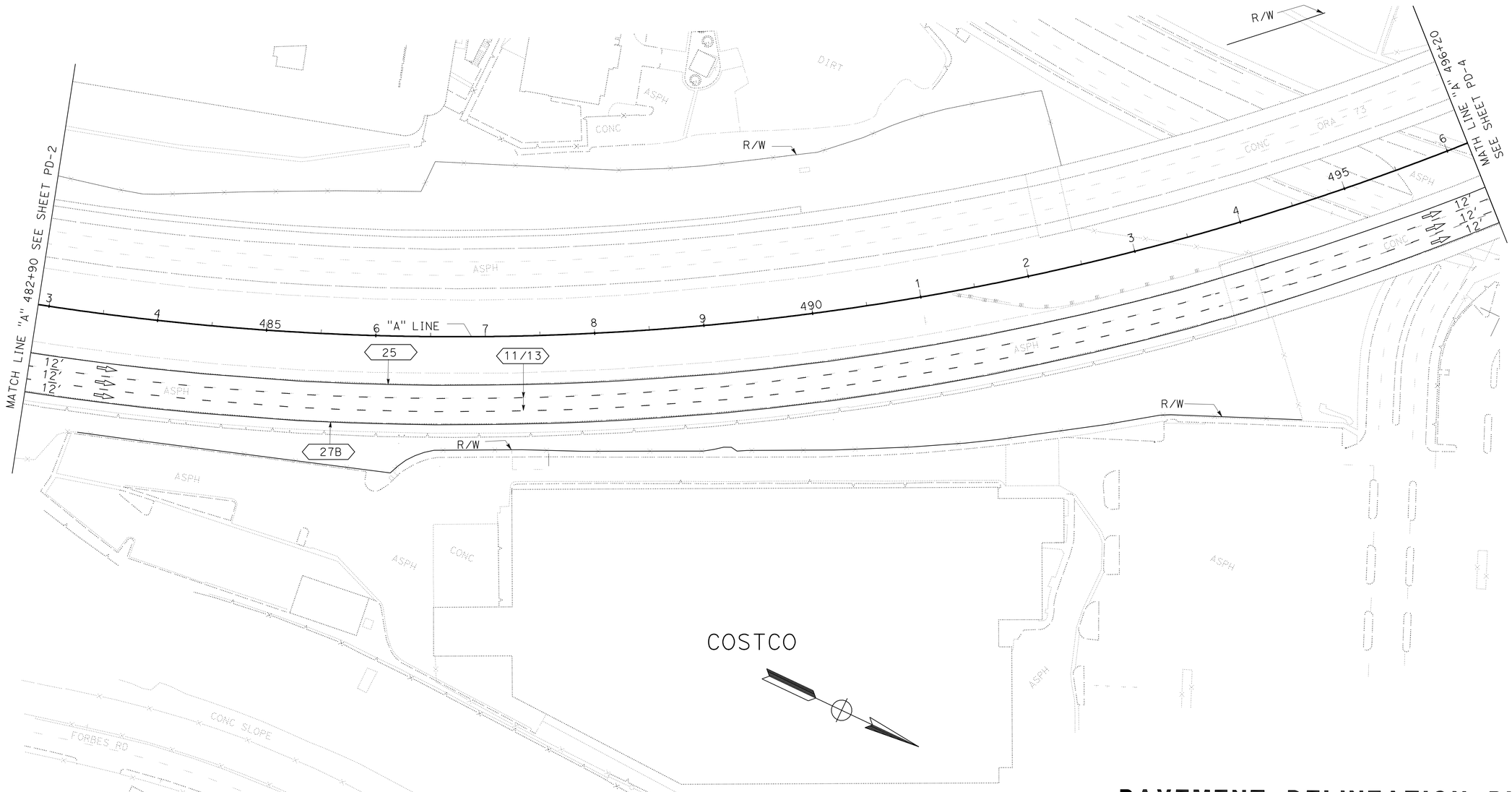

PAVEMENT DELINEATION PLAN

SCALE: 1"=50'

PD-3

APPROVED FOR PAVEMENT DELINEATION WORK ONLY

REVISED BY	DATE REVISED

CALCULATED-DESIGNED BY	CHECKED BY
DUNG PHAN	ALMA OLGUIN

FUNCTIONAL SUPERVISOR
KAMRAN MAZHAR

STATE OF CALIFORNIA - DEPARTMENT OF TRANSPORTATION
Caltrans
DESIGN DIVISION

LAST REVISION 00-00-00
DATE PLOTTED => 16-JUN-2012
TIME PLOTTED => 11:24

Dist	COUNTY	ROUTE	POST MILES TOTAL PROJECT	SHEET No.	TOTAL SHEETS
12	Ora	73	10.7/11.6	16	51

REGISTERED CIVIL ENGINEER 05-11-12 DATE

6-11-12
PLANS APPROVAL DATE

REGISTERED PROFESSIONAL ENGINEER
DUNG THANH PHAN
No. C77219
Exp. 6/30/13
CIVIL
STATE OF CALIFORNIA

THE STATE OF CALIFORNIA OR ITS OFFICERS OR AGENTS SHALL NOT BE RESPONSIBLE FOR THE ACCURACY OR COMPLETENESS OF SCANNED COPIES OF THIS PLAN SHEET.

NOTE:

FOR ACCURATE RIGHT OF WAY DATA, CONTACT
RIGHT OF WAY ENGINEERING AT THE DISTRICT OFFICE.

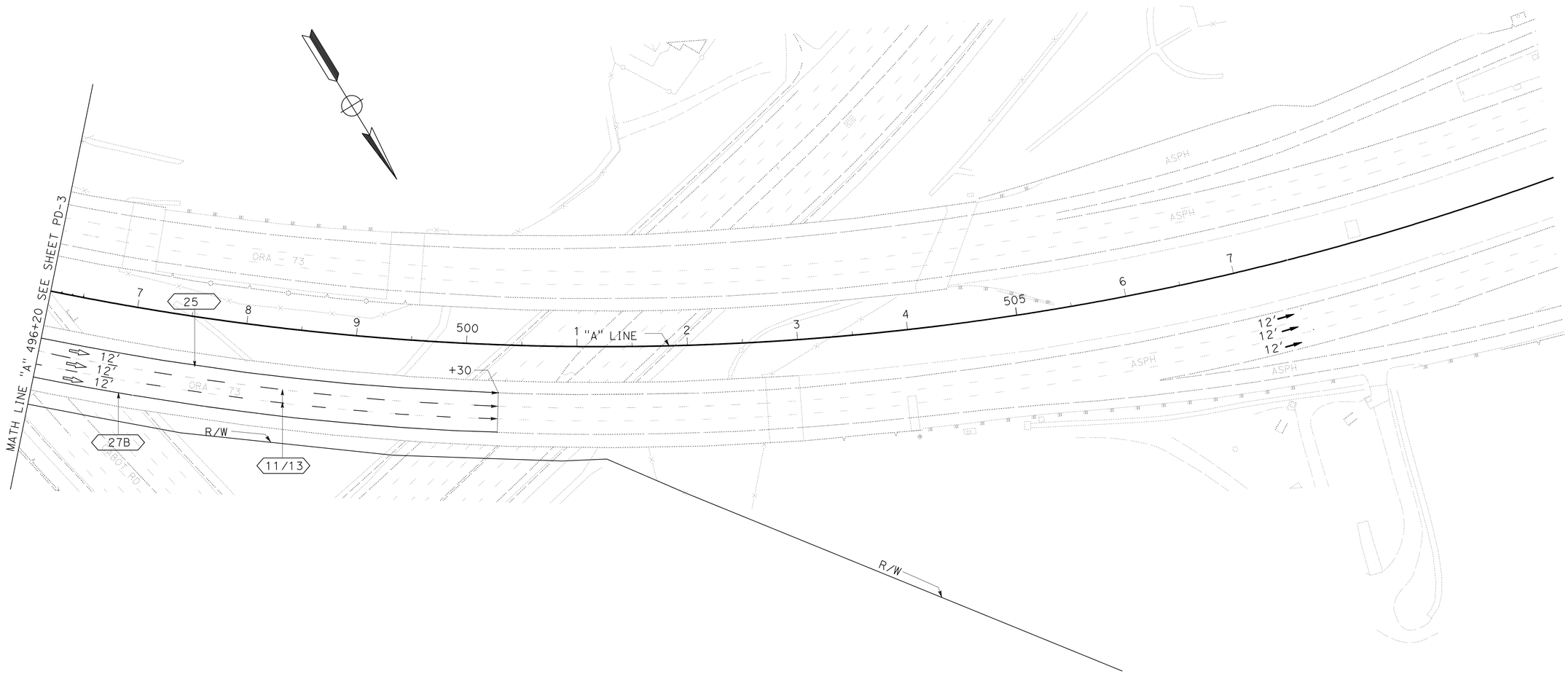

PAVEMENT DELINEATION PLAN

SCALE: 1"=50'

PD-4

APPROVED FOR PAVEMENT DELINEATION WORK ONLY

STATE OF CALIFORNIA - DEPARTMENT OF TRANSPORTATION
Caltrans® DESIGN DIVISION

FUNCTIONAL SUPERVISOR: KAMRAN MAZHAR
CALCULATED-DESIGNED BY: DUNG PHAN
CHECKED BY: ALMA OLGUIN
REVISED BY
DATE REVISED

LAST REVISION 00-00-00
DATE PLOTTED => 16-JUN-2012
TIME PLOTTED => 11:24

Dist	COUNTY	ROUTE	POST MILES TOTAL PROJECT	SHEET No.	TOTAL SHEETS
12	Ora	73	10.7/11.6	17	51

REGISTERED CIVIL ENGINEER 05-11-12 DATE

6-11-12
PLANS APPROVAL DATE

REGISTERED PROFESSIONAL ENGINEER
DUNG THANH PHAN
No. C77219
Exp. 6/30/13
CIVIL
STATE OF CALIFORNIA

THE STATE OF CALIFORNIA OR ITS OFFICERS OR AGENTS SHALL NOT BE RESPONSIBLE FOR THE ACCURACY OR COMPLETENESS OF SCANNED COPIES OF THIS PLAN SHEET.

PAVEMENT DELINEATION QUANTITIES

SHEET No	STATIONS	4" THERMOPLASTIC TRAFFIC STRIPE DETAIL 25 SOLID YELLOW	4" THERMOPLASTIC TRAFFIC STRIPE DETAIL 27B SOLID WHITE	DETAIL 11/13 4" THERMOPLASTIC T TRAFFIC STRIPE BROKEN (36-12) WHITE	DETAIL 11/14 4" THERMOPLASTIC T TRAFFIC STRIPE BROKEN (36-12) WHITE	PAVEMENT MARKER RETROREFLECTIVE TYPE H	PAVEMENT MARKER RETROREFLECTIVE TYPE G	PAVEMENT MARKER RETROREFLECTIVE TYPE C	PAVEMENT MARKER NON-REFLECTIVE TYPE A	REMOVE YELLOW THERMOPLASTIC TRAFFIC STRIPE (HAZARDOUS WASTE)	REMOVE THERMOPLASTIC TRAFFIC STRIPE	REMOVE PAVEMENT MARKER
		LF	LF	LF	LF	EA	EA	EA	EA	LF	LF	EA
PD-1	"NBC" 468+90 TO 470+00		110	110			5		8		138	13
	"A" 470+00 TO 471+20		120	120			7		12		150	19
PD-2	"A" 471+20 TO 473+72			252			11		20		63	31
	"A" 473+72 TO 475+16				288			8	24		72	32
	"A" 475+16 TO 482+90			1548			66		128		387	194
	"A" 476+70 TO 482+90	620				14				620		14
	"A" 471+20 TO 482+90		1170								1170	
PD-3	"A" 482+90 TO 496+20	1330				29				1330		29
	"A" 482+90 TO 496+20			1330			57		112		333	169
	"A" 482+90 TO 496+20		1330								1330	
PD-4	"A" 496+20 TO 500+30	410				10				410		10
	"A" 496+20 TO 500+30			820			38		72		205	110
	"A" 496+20 TO 500+30		410								410	
SUBTOTAL		2360	3140	4180	288	53	184	8	376	2360	4258	621
TOTAL		5500		4468		245			376	2360	4258	621
SHEET THQ-1 TOTAL						156			200			356
GRAND TOTAL		5500		4468		401			576	2360	4258	977

PAVEMENT DELINEATION QUANTITIES

PDQ-1

STATE OF CALIFORNIA - DEPARTMENT OF TRANSPORTATION
Caltrans® DESIGN DIVISION

FUNCTIONAL SUPERVISOR: KAMRAN MAZHAR
CALCULATED-DESIGNED BY: DUNG PHAN
CHECKED BY: ALMA OLGUIN
REVISED BY
DATE REVISED

LAST REVISION 00-00-00
DATE PLOTTED => 16-JUN-2012
TIME PLOTTED => 11:24

Dist	COUNTY	ROUTE	POST MILES TOTAL PROJECT	SHEET No.	TOTAL SHEETS
12	Ora	73	10.7/11.6	18	51

REGISTERED CIVIL ENGINEER 06-06-12 DATE

6-11-12
PLANS APPROVAL DATE

REGISTERED PROFESSIONAL ENGINEER
DUNG THANH PHAN
No. C77219
Exp.6/30/13
CIVIL
STATE OF CALIFORNIA

THE STATE OF CALIFORNIA OR ITS OFFICERS OR AGENTS SHALL NOT BE RESPONSIBLE FOR THE ACCURACY OR COMPLETENESS OF SCANNED COPIES OF THIS PLAN SHEET.

CHAIN LINK FENCE QUANTITIES

STATION LIMITS	RECONSTRUCT CHAIN LINK FENCE	REMOVE CHAIN LINK FENCE	CHAIN LINK FENCE (TYPE CL-6)
	LF	LF	LF
"A" Sta 483+31.7 TO 494+03	1240	1240	1240

TCE QUANTITIES

STATION LIMITS	TEMPORARY FENCE (TYPE CL-6)	GEOMEMBRANE VISUAL BARRIER
	LF	SQYD
"A" Sta 485+34 TO 485+63	118	78.7
"A" Sta 487+22 TO 494+46	772	514.4
TOTAL	890	593.4

ROADWAY QUANTITIES

STATION LIMITS	ROADWAY EXCAVATION	HOT MIX ASPHALT CONCRETE (TYPE A)
	CY	TON
"A" Sta 482+90 TO 492+00	41.3	82.8
TOTAL	41.3	82.8

SUMMARY OF QUANTITIES

Q-1

REVISED BY | DATE REVISED
DUNG PHAN | ALMA OLGUIN
CALCULATED-DESIGNED BY | CHECKED BY
FUNCTIONAL SUPERVISOR | KAMRAN MAZHAR
STATE OF CALIFORNIA - DEPARTMENT OF TRANSPORTATION
Caltrans® DESIGN DIVISION

LAST REVISION 06-06-12 | DATE PLOTTED => 21-JUN-2012 | TIME PLOTTED => 11:02

Dist	COUNTY	ROUTE	POST MILES TOTAL PROJECT	SHEET No.	TOTAL SHEETS
12	Ora	73	10.7/11.6	19	51

Ronald Wong
LICENSED LANDSCAPE ARCHITECT

6-11-12
PLANS APPROVAL DATE

LICENSED LANDSCAPE ARCHITECT
RONALD WONG No. 1559
Ronald Wong
Signature
1-31-14
Renewal Date
05-11-12
Date
STATE OF CALIFORNIA

THE STATE OF CALIFORNIA OR ITS OFFICERS OR AGENTS SHALL NOT BE RESPONSIBLE FOR THE ACCURACY OR COMPLETENESS OF SCANNED COPIES OF THIS PLAN SHEET.

PLANT LIST AND PLANTING SPECIFICATIONS

PLANT GROUP	PLANT No.	SYMBOL	BOTANICAL NAME	COMMON NAME	SIZE	QUANTITY EACH	HOLE SIZE (INCH) Dia	HOLE SIZE (INCH) DEPTH	BASIN TYPE	IRON SULFATE ①	SOIL AMEND ①	COMMERCIAL FERTILIZER ① PLANTING	COMMERCIAL FERTILIZER ① PLT ESTB	BASIN MULCH (CY)	STAKING	PLANTING LIMITS MINIMUM DISTANCE (ft) FROM ETW	Pvmt	FENCE	WALL	PAVED DITCH	EARTH DITCH	ON CENTER (ft)	REMARKS
A	1		ALOE SPINOSISSIMA	SPIDER ALOE	No. 1	56	③	③	I	—	.15 CF	1 PKT	0.5 LB	.03 CY	—	—	3	—	—	—	—	5	SHRUB
	2		AEONIUM 'PURPLE QUEEN'	NCN	No. 1	36	③	③	I	—	.15 CF	1 PKT	0.5 LB	.03 CY	—	—	3	—	—	—	—	3	SHRUB
	3		KALANCHOE BLOSSFELDIANA	NCN	No. 1	77	③	③	I	—	.15 CF	1 PKT	0.5 LB	.03 CY	—	—	—	—	—	—	—	1.5	SHRUB
B	4		AGAVE ATTENUATA	FOXTAIL	No. 5	82	③	③	I	—	.25 CF	1 PKT	0.5 LB	.03 CY	—	—	—	—	—	—	—	5	SHRUB
	5		ACACIA REDOLENS	PROSTRATE ACACIA	No. 5	235	③	③	I	—	.25 CF	1 PKT	0.5 LB	,03 CY	—	—	20	20	15	20	—	5	SHRUB
	6		EUCALYPTUS MACULATA	SPOTTED GUM	No. 5	6	③	③	II	—	.25 CF	1 PKT	0.5 LB	.03 CY	—	—	—	—	30	15	—	—	TREE ⑦
	7		RHAPIOLEPSIS INDICA	INDIAN HAWTHORNE	No. 5	5	③	③	I	—	.25 CF	1 PKT	0.5 LB	.03 CY	—	—	—	—			—	5	SHRUB
F	8		LONICERA JAPONICA 'HALLIANA'	HALL'S HONEYSUCKLE	IN FLATS	1000	③	③	I	—	—	—	—	—	—	—	—	—	—	—	—	1	GROUNDCOVER
	9		MYOPORUM PARVIFOLIUM	PROSTRATE MAYOPORUM	IN FLATS	5800	③	③	I	—	—	—	—	—	—	—	10	10	—	10	—	1	GROUNDCOVER
U	10		LIGUSTRUM JAPONICUM 'TEXANUM'	WAX LEAF LIGUSTRUM	No. 15	31	③	③	II	—	.06 CF	2 PKT	1 LB	.07 CY	—	—	—	—	—	—	—	4	SHRUB
	11		PHORMIUM TENAX 'ATROPURPUREUM'	NEW ZEALAND FLAX	No. 15	13	③	③	II	—	.06 CF	2 PKT	1 LB	.07 CY	—	—	—	—	—	—	—	—	SHRUB ⑦
K	12		CERCIDIUM FLORIDUM	BLUE PALO VERDE	24" BOX	1	24	18	II	—	2.5 CF	4 PKT	1 LB	.11 CY	④	—	15	15	15	15	—	—	TREE ⑦

APPLICABLE WHEN CIRCLED:

① - QUANTITIES SHOWN ARE "PER PLANT" UNLESS SHOWN AS SQFT OR SQYD APPLICATION RATES
2 - BASIN MULCH IS INCLUDED WITH MULCH QUANTITIES SHOWN ON PLANTING PLAN
③ - SUFFICIENT TO RECEIVE ROOT BALL AND AMENDMENTS IF REQUIRED
④ - SEE DETAIL
5 - SEE SPECIAL PROVISIONS
6 - SEE STANDARD SPECIFICATIONS
⑦ - AS SHOWN ON PLANS
8 - UNLESS OTHERWISE SHOWN ON PLANS
9 - FOLIAGE PROTECTOR REQUIRED
10 - ROOT PROTECTOR REQUIRED
11 - ROOT BARRIER REQUIRED
12 - STATE-FURNISHED

MULCH

NOTE:
UNDERLINED PORTIONS OF BOTANICAL NAME INDICATE ABBREVIATIONS USED ON PLANTING PLANS.

PLANT LIST
PL-1

REVISED BY | DATE REVISED
DEEDEE MARTINEZ | RONALD WONG
CALCULATED-DESIGNED BY | CHECKED BY
SENIOR LANDSCAPE ARCHITECT
ERIC DICKSON

STATE OF CALIFORNIA - DEPARTMENT OF TRANSPORTATION
Caltrans® LANDSCAPE ARCHITECTURE

LAST REVISION 05-01-12 | DATE PLOTTED => 16-JUN-2012 | TIME PLOTTED => 11:24

Dist	COUNTY	ROUTE	POST MILES TOTAL PROJECT	SHEET No.	TOTAL SHEETS
12	Ora	73	10.7/11.6	20	51

Ronald Wong
LICENSED LANDSCAPE ARCHITECT

6-11-12
PLANS APPROVAL DATE

LICENSED LANDSCAPE ARCHITECT
RONALD WONG NO. 1355
Ronald Wong
Signature
1-31-14
Renewal Date
05-11-12
Date
STATE OF CALIFORNIA

THE STATE OF CALIFORNIA OR ITS OFFICERS OR AGENTS SHALL NOT BE RESPONSIBLE FOR THE ACCURACY OR COMPLETENESS OF SCANNED COPIES OF THIS PLAN SHEET.

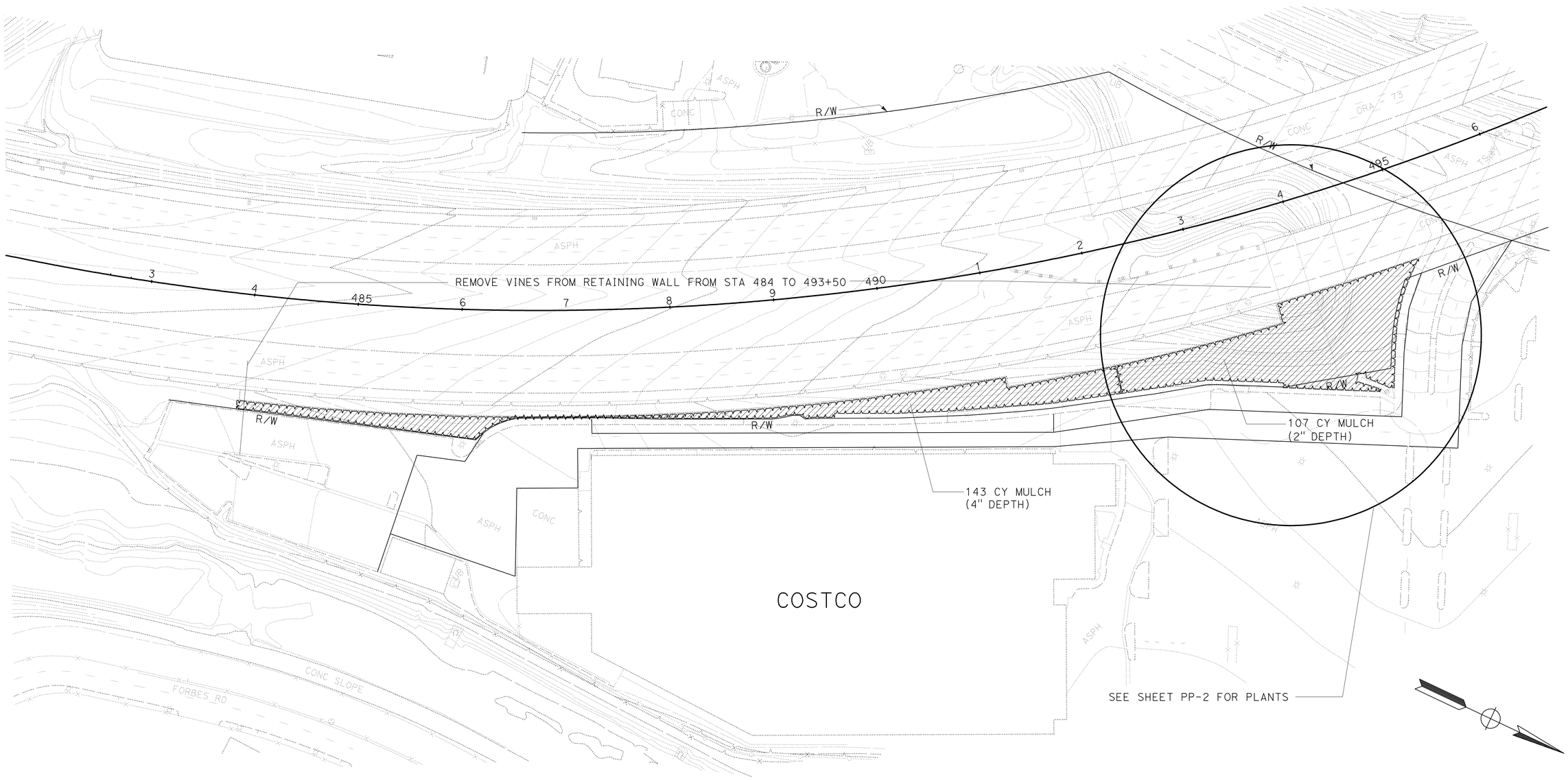

PLANTING PLAN

SCALE: 1"=50'

APPROVED FOR PLANTING WORK ONLY

PP-1

STATE OF CALIFORNIA - DEPARTMENT OF TRANSPORTATION
Caltrans® LANDSCAPE ARCHITECTURE

SENIOR LANDSCAPE ARCHITECT: ERIC DICKSON

CALCULATED-DESIGNED BY: RONALD WONG
CHECKED BY: VATHANA CHY

REVISED BY
DATE REVISED

LAST REVISION 00-00-00
DATE PLOTTED => 16-JUN-2012
TIME PLOTTED => 11:24

Dist	COUNTY	ROUTE	POST MILES TOTAL PROJECT	SHEET No.	TOTAL SHEETS
12	Ora	73	10.7/11.6	21	51

Ronald Wong
LICENSED LANDSCAPE ARCHITECT

6-11-12
PLANS APPROVAL DATE

LICENSED LANDSCAPE ARCHITECT
RONALD WONG No. 1395
Ronald Wong
Signature
1-31-14
Renewal Date
05-11-12
Date
STATE OF CALIFORNIA

THE STATE OF CALIFORNIA OR ITS OFFICERS OR AGENTS SHALL NOT BE RESPONSIBLE FOR THE ACCURACY OR COMPLETENESS OF SCANNED COPIES OF THIS PLAN SHEET.

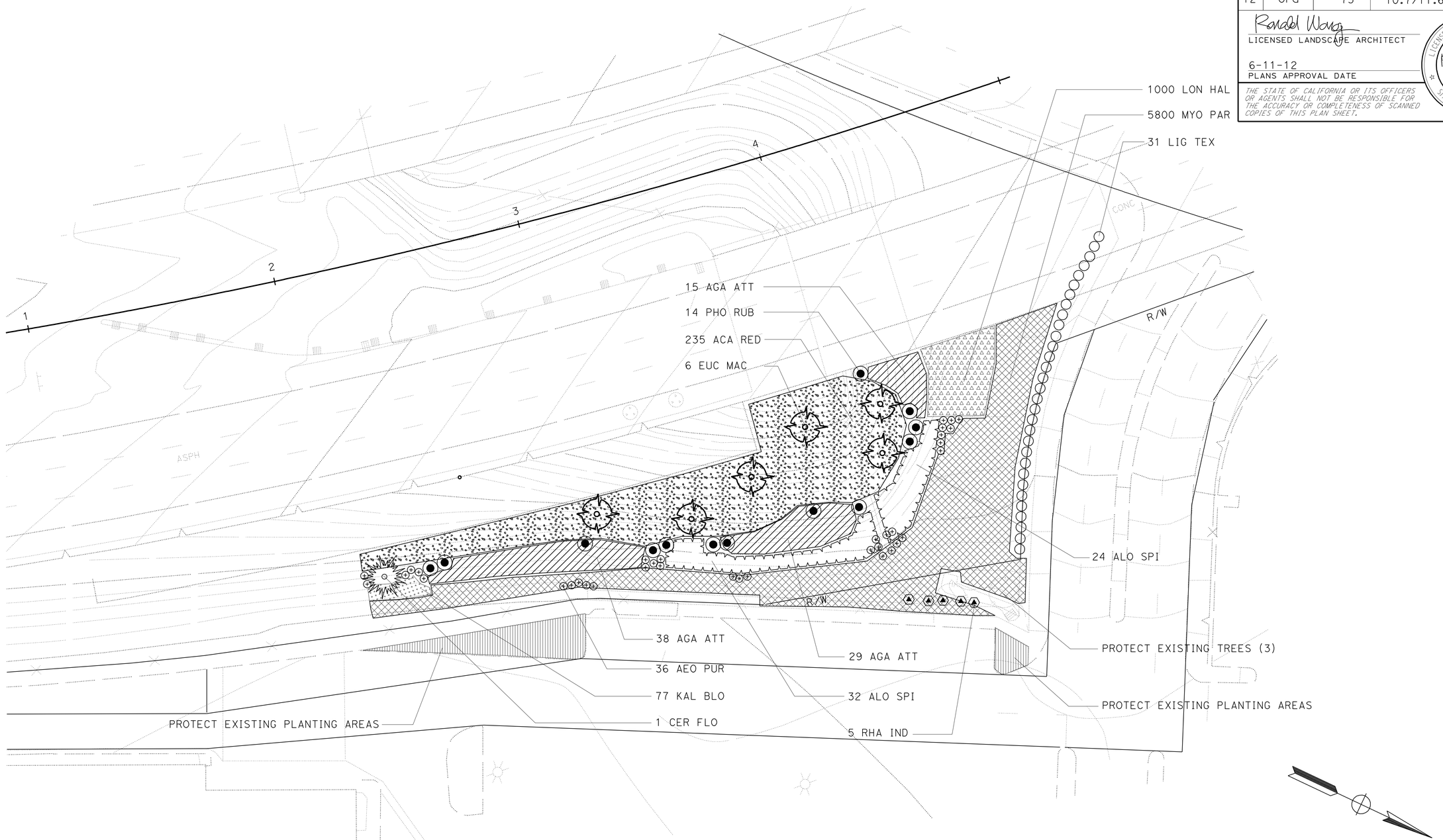

APPROVED FOR PLANTING WORK ONLY

PLANTING PLAN

SCALE: 1"=20'

PP-2

STATE OF CALIFORNIA - DEPARTMENT OF TRANSPORTATION
Caltrans® LANDSCAPE ARCHITECTURE

SENIOR LANDSCAPE ARCHITECT: ERIC DICKSON

CALCULATED-DESIGNED BY: RONALD WONG
CHECKED BY

REVISED BY
DATE REVISED

LAST REVISION 00-00-00
DATE PLOTTED => 16-JUN-2012
TIME PLOTTED => 11:25

Dist	COUNTY	ROUTE	POST MILES TOTAL PROJECT	SHEET No.	TOTAL SHEETS
12	Ora	73	10.7/11.6	22	51

Ronald Wong
LICENSED LANDSCAPE ARCHITECT

6-11-12
PLANS APPROVAL DATE

LICENSED LANDSCAPE ARCHITECT
RONALD WONG NO. 1355
Ronald Wong
Signature
1-31-14
Renewal Date
05-11-12
Date
STATE OF CALIFORNIA

THE STATE OF CALIFORNIA OR ITS OFFICERS OR AGENTS SHALL NOT BE RESPONSIBLE FOR THE ACCURACY OR COMPLETENESS OF SCANNED COPIES OF THIS PLAN SHEET.

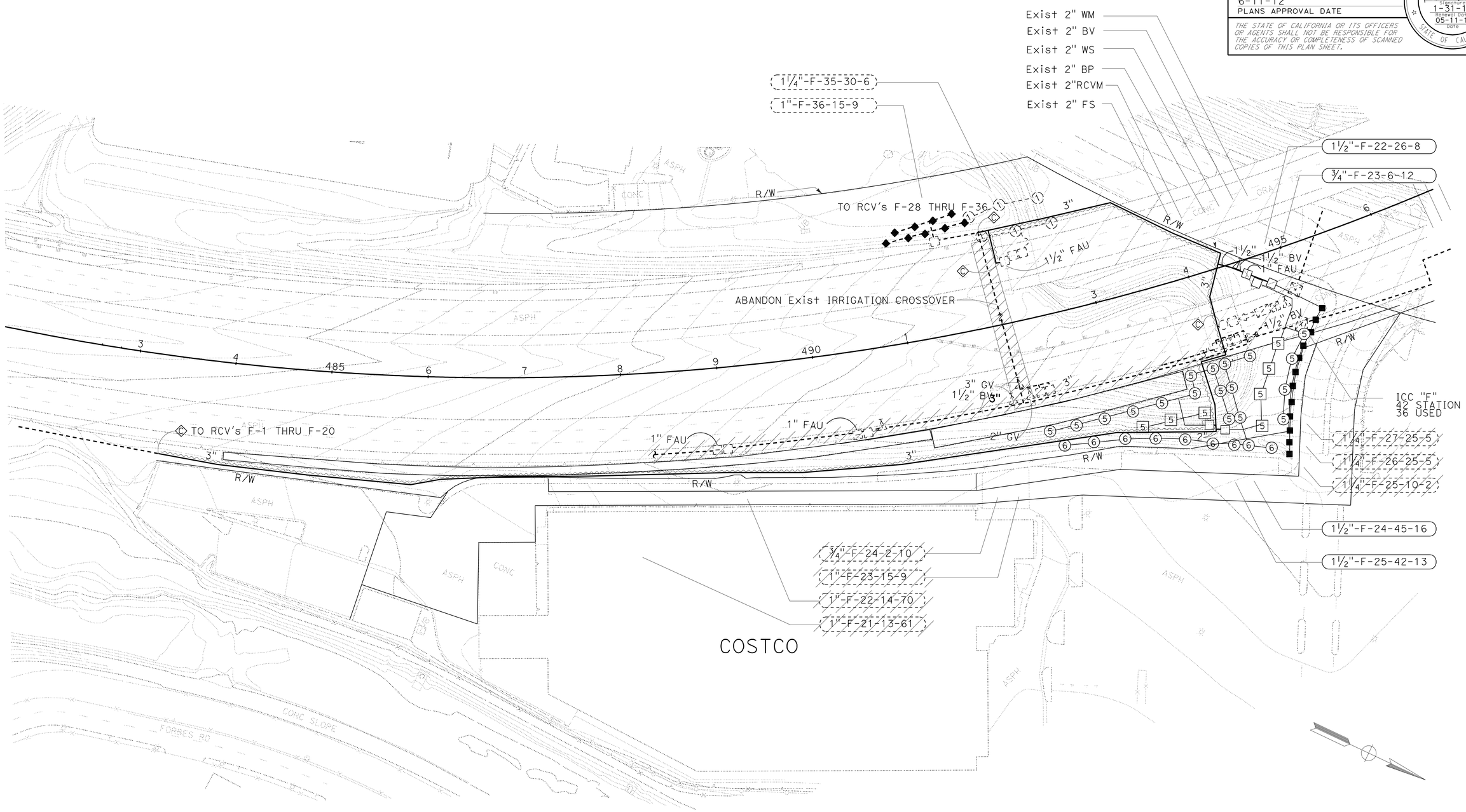

IRRIGATION PLAN

SCALE: 1"=50'

APPROVED FOR IRRIGATION WORK ONLY

IP-1

STATE OF CALIFORNIA - DEPARTMENT OF TRANSPORTATION
Caltrans® LANDSCAPE ARCHITECTURE

SENIOR LANDSCAPE ARCHITECT: ERIC DICKSON

CALCULATED-DESIGNED BY: RONALD WONG
CHECKED BY: VATHANA CHY

REVISED BY
DATE REVISED

LAST REVISION 00-00-00
DATE PLOTTED => 16-JUN-2012
TIME PLOTTED => 11:25

Dist	COUNTY	ROUTE	POST MILES TOTAL PROJECT	SHEET No.	TOTAL SHEETS
12	Ora	73	10.7/11.6	23	51

Ronald Wong
LICENSED LANDSCAPE ARCHITECT

6-11-12
PLANS APPROVAL DATE

LICENSED LANDSCAPE ARCHITECT
RONALD WONG No. 1559
Ronald Wong
Signature
01-31-14
Renewal Date
05-11-12
Date
STATE OF CALIFORNIA

THE STATE OF CALIFORNIA OR ITS OFFICERS OR AGENTS SHALL NOT BE RESPONSIBLE FOR THE ACCURACY OR COMPLETENESS OF SCANNED COPIES OF THIS PLAN SHEET.

SUBTOTALS PER VALVE ON LATERAL SUPPLY SIDE OF CONTROL VALVE

DESCRIPTION		UNIT	VALVE OR ASSEMBLY NUMBER F-22	F-23	F-24	F-25	SUBTOTALS	UNIT	DESCRIPTION	
PLASTIC PIPE SUPPLY LINE	PR 200									PR 200 PLASTIC PIPE SUPPLY LINE
PLASTIC PIPE SUPPLY LINE	PR 315									PR 315 PLASTIC PIPE SUPPLY LINE
GSP										GSP
DIP										DIP
SPRINKLER TYPE	A-5		5		7	13	25	EA	A-5	SPRINKLER TYPE
SPRINKLER TYPE	A-6				9		9	EA	A-6	SPRINKLER TYPE
SPRINKLER TYPE	B-4			12			12	EA	B-4	SPRINKLER TYPE

DESCRIPTION		UNIT	VALVE OR ASSEMBLY NUMBER F-22	F-23	F-24	F-25	SUBTOTALS	UNIT	DESCRIPTION	
PLASTIC PIPE SUPPLY LINE	PR 200									PR 200 PLASTIC PIPE SUPPLY LINE
PLASTIC PIPE SUPPLY LINE	SCH 40 1"	LF	150	130	270	310	860	LF	1"	SCH 40 PLASTIC PIPE SUPPLY LINE
PLASTIC PIPE SUPPLY LINE	SCH 40 1¼"	LF	20	90	80		190	LF	1¼"	SCH 40 PLASTIC PIPE SUPPLY LINE
PLASTIC PIPE SUPPLY LINE	SCH 40 1½"	LF			50	20	70	LF	1½"	SCH 40 PLASTIC PIPE SUPPLY LINE
PLASTIC PIPE SUPPLY LINE	SCH 40 2"		40		20	30	90	LF	2"	SCH 40 PLASTIC PIPE SUPPLY LINE
GSP										GSP
DIP										DIP
SPRINKLER TYPE										SPRINKLER TYPE

IRRIGATION QUANTITIES

IQ-1

REVISED BY | DATE REVISED
DEEDEE MARTINEZ | RONALD WONG
CALCULATED-DESIGNED BY | CHECKED BY
SENIOR LANDSCAPE ARCHITECT
ERIC DICKSON

STATE OF CALIFORNIA - DEPARTMENT OF TRANSPORTATION
Caltrans® LANDSCAPE ARCHITECTURE

LAST REVISION 05-09-12 | DATE PLOTTED => 16-JUN-2012 | TIME PLOTTED => 11:25

Dist	COUNTY	ROUTE	POST MILES TOTAL PROJECT	SHEET No.	TOTAL SHEETS
12	Ora	73	10.7/11.6	24	51

Ronald Wong
LICENSED LANDSCAPE ARCHITECT

6-11-12
PLANS APPROVAL DATE

LICENSED LANDSCAPE ARCHITECT
RONALD WONG No. 1559
Signature
01-31-14
Renewal Date
05-11-12
Date
STATE OF CALIFORNIA

THE STATE OF CALIFORNIA OR ITS OFFICERS OR AGENTS SHALL NOT BE RESPONSIBLE FOR THE ACCURACY OR COMPLETENESS OF SCANNED COPIES OF THIS PLAN SHEET.

SUBTOTALS PER PLAN SHEET ON MAIN SUPPLY SIDE OF CONTROL VALVE

DESCRIPTION			UNIT	SHEET NUMBER I-P1	SUBTOTALS
BPA		ENCLOSURE			
BOOSTER PUMP					
IRRIGATION CONTROLLER		STATION			
		STATION			
		STATION			
	CEC	SINGLE			
		DOUBLE			
VALVES AND ASSEMBLIES	BV	1½"	EA	1	
	RCV	¾"	EA	1	
		1½	EA	1	
	GV				
	QCV				
	FV				
	FAU	1"	EA	1	
CONDUIT	CSP				
	WSP				
PLASTIC PIPE SUPPLY LINE	PR 200				
	SCH 40	1½"	LF	60	
		3"	LF	1800	
GSP					
DIP					

TOTAL QUANTITIES

TOTALS	UNIT	DESCRIPTION		
		ENCLOSURE		BPA
		BOOSTER PUMP		
		STATION		IRRIGATION CONTROLLER
		STATION		
		STATION		
		SINGLE	CEC	
		DOUBLE		
1	EA	1½"	BV	VALVES AND ASSEMBLIES
1	EA	¾"	RCV	
1	EA	1½		
			GV	
			QCV	
			FV	
1	EA	1"	FAU	
			CSP	CONDUIT
			WSP	
			PR 200	PLASTIC PIPE SUPPLY LINE
860	LF	1"	SCH 40	
190	LF	1¼"		
130	LF	1½"		
90	LF	2"		
1800	LF	3"		
			GSP	
			DIP	
			SPRINKLER TYPE	

IRRIGATION QUANTITIES

IQ-2

STATE OF CALIFORNIA - DEPARTMENT OF TRANSPORTATION
Caltrans® LANDSCAPE ARCHITECTURE

SENIOR LANDSCAPE ARCHITECT: ERIC DICKSON
CALCULATED-DESIGNED BY: DEEDEE MARTINEZ
CHECKED BY: RONALD WONG
REVISED BY
DATE REVISED

LAST REVISION 05-09-12
DATE PLOTTED => 16-JUN-2012
TIME PLOTTED => 11:25

Dist	COUNTY	ROUTE	POST MILES TOTAL PROJECT	SHEET No.	TOTAL SHEETS
12	Ora	73	10.7/11.6	25	51

Ronald Wong
LICENSED LANDSCAPE ARCHITECT

6-11-12
PLANS APPROVAL DATE

LICENSED LANDSCAPE ARCHITECT
RONALD WONG No. 1559
Ronald Wong
Signature
1-31-14
Renewal Date
05-11-12
Date
STATE OF CALIFORNIA

THE STATE OF CALIFORNIA OR ITS OFFICERS OR AGENTS SHALL NOT BE RESPONSIBLE FOR THE ACCURACY OR COMPLETENESS OF SCANNED COPIES OF THIS PLAN SHEET.

SPRINKLER SCHEDULE

SYMBOL	TYPE	DESCRIPTION	SPRAY PATTERN	OPERATING PRESSURE (psi)	PRESSURE COMPENSATING	PLUS/MINUS 5% ② DISCHARGE: GALLONS PER MINUTE (GPM)	DISCHARGE: GALLONS PER HOUR (GPH)	RADIUS (ft)	WIDTH x LENGTH (ft)	MATERIAL	INLET CONNECTION (NPT INCH)	POSITIVE-LOCKING Adj ARC STOP	BACKSPLASH PREVENTER	DIFFUSER PIN	DISTANCE CONTROL FLAP	Adj DISCHARGE	RISER: TYPE	RISER: MATERIAL: PLASTIC	RISER: MATERIAL: GALVANIZED	RISER: SIZE (IPS INCH)	RISER: HEIGHT (INCH)	RISER: FLOW SHUTOFF DEVICE	⑤ SWING JOINT (TYPE)	RISER SUPPORT	SPRINKLER PROTECTOR (TYPE)	REMARKS
5	A-5	GEAR DRIVEN	F	35	--	35	--	30	X	PL	¾"	--	--	--	--	--	IV	X	--	¾"	12	--	I	--	--	
⑤	A-5	GEAR DRIVEN	P	35	--	35	--	30	X	PL	¾"	--	--	--	--	--	IV	X	--	¾"	12	--	I	--	--	
⑥	A-6	GEAR DRIVEN POP-UP	P	35	--	35	--	30	X	PL	¾"	--	--	--	--	--	VI	--	--	--	--	--	--	--	--	12" POP-UP
—■—	B-4	STRIP SPRAY	EST/ SST	30	--	0.49 / 1.21	--	--	4x15/ 4x30	PL	½"	--	--	--	--	--	VI	--	--	--	--	--	--	--	--	6" POP-UP

X IN BOX DENOTES REQUIREMENT

APPLICABLE WHEN CIRCLED BELOW:

1 - SEE SPECIAL PROVISIONS.
② - IF A PRESSURE COMPENSATING DEVICE IS SPECIFIED, THE DISCHARGE AND RADII SHOWN REFLECT ITS USE.
3 - ARC STOP SHALL BE FITTED WITH A NUT AND BOLT.
4 - VINYL-COATED CAST IRON HOUSING.
⑤ - SWING JOINTS REQUIRED ADJACENT TO SHOULDERS, CURBS, SIDEWALKS, AND DIKES.
6 - UNLESS OTHERWISE SHOWN ON PLANS.

TYPE A-5 & A-6 SPRINKLER

1"	1¼"	1½"	2"
0-12 gal/min	13-22 gal/min	23-30 gal/min	31-50 gal/min
0-5 HEADS	5-8 HEADS	9-12 HEADS	12-19 HEADS

(NUMBER OF HEADS BASED ON 180 DEGREE SPRINLKER PATTERN)

RCV

TYPE B-4 SPRINKLER

1"	1¼"
0-12 gal/min	13-22 gal/min
0-9 HEADS	10-26 HEADS

RCV

PIPE SIZING CHART (PVC SCH 40) (LATERAL LINE)

NOTE:

ALL LATERAL PIPE SIZE SHALL BE ACCORDING TO THE CHART ABOVE, UNLESS OTHERWISE NOTED ON PLAN.

SPRINKLER SCHEDULE

LD-1

REVISED BY	DATE REVISED
RONALD WONG	RONALD WONG

CALCULATED-DESIGNED BY: RONALD WONG
CHECKED BY: ERIC DICKSON
SENIOR LANDSCAPE ARCHITECT

STATE OF CALIFORNIA - DEPARTMENT OF TRANSPORTATION
Caltrans® LANDSCAPE ARCHITECTURE

LAST REVISION 05-02-12 | DATE PLOTTED => 16-JUN-2012 | TIME PLOTTED => 11:25

DIST	COUNTY	ROUTE	POST MILES TOTAL PROJECT	SHEET No.	TOTAL SHEETS
12	Ora	73	10.7/11.6	26	51

REGISTERED CIVIL ENGINEER 6-07-12 DATE

6-11-12
PLANS APPROVAL DATE

REGISTERED PROFESSIONAL ENGINEER YEO HOON YOON No. 73532 Exp. 12/31/12 CIVIL STATE OF CALIFORNIA

The State of California or its officers or agents shall not be responsible for the accuracy or completeness of electronic copies of this plan sheet.

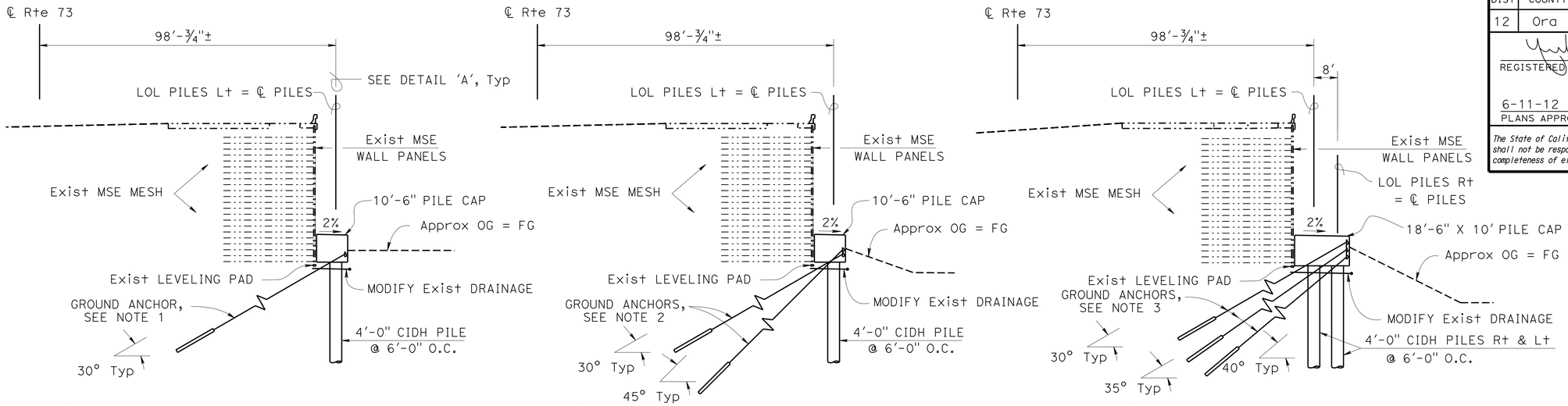

SEGMENT A - FROM LOL PILES Lt Sta 10+00 TO Sta 13+05 SEGMENT B - FROM LOL PILES Lt Sta 13+05 TO Sta 17+41 SEGMENT C - FROM LOL PILES Lt Sta 17+41 TO Sta 19+96

TYPICAL SECTIONS

SCALE 1" = 20'

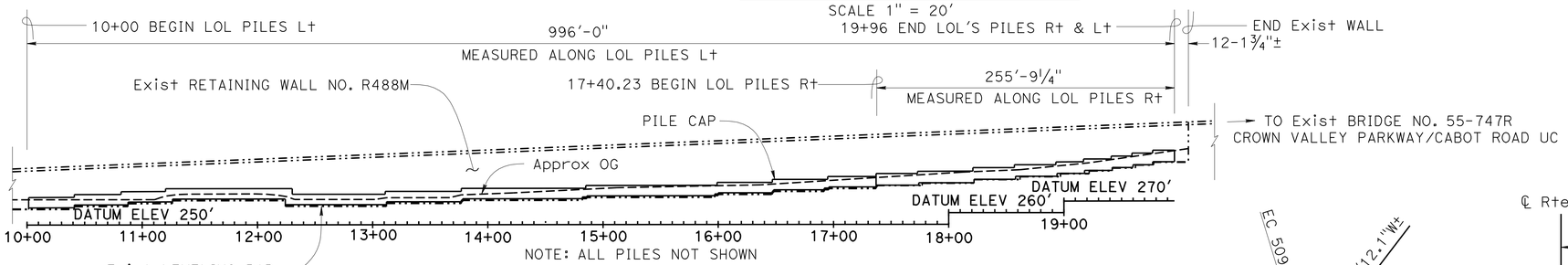

NOTE: ALL PILES NOT SHOWN

DEVELOPED ELEVATION

SCALE 1" = 60'

QUANTITIES

STRUCTURE EXCAVATION (SHEAR PILE WALL)	3,245	CY
STRUCTURE BACKFILL (SHEAR PILE WALL)	165	CY
TEMPORARY WORKING BENCH	LUMP	SUM
GROUND ANCHOR (SUBHORIZONTAL)	322	EA
48" CAST-IN-DRILLED-HOLE CONCRETE PILING	13,241	LF
STRUCTURAL CONCRETE, SHEAR PILE WALL	4,612	CY
BAR REINFORCING STEEL (SHEAR PILE WALL)	5,018,146	LB
MODIFY DRAINAGE SYSTEM	LUMP	SUM

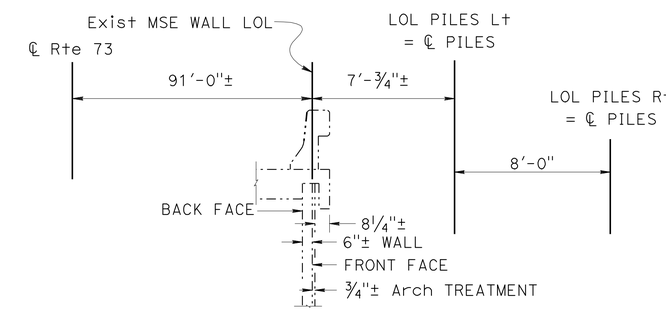

Detail 'A'

No Scale

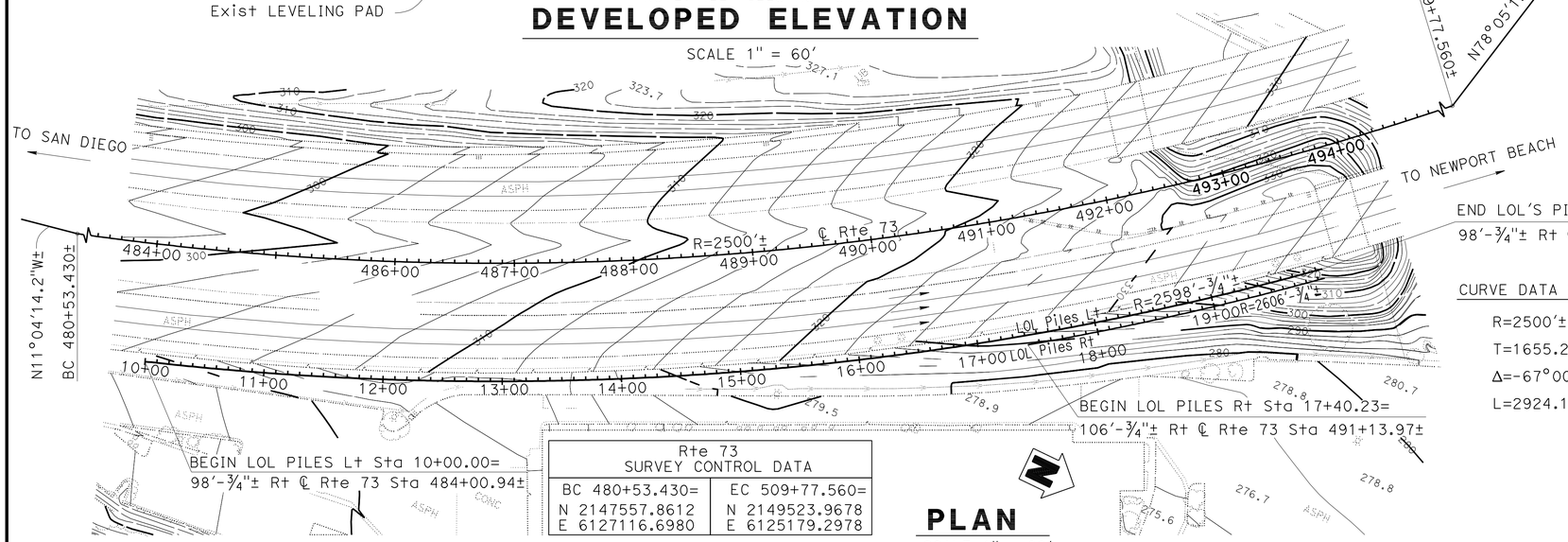

END LOL'S PILES Rt & Lt Sta 19+96.00=
98'-¾"± Rt ℄ Rte 73 Sta 493+59.33±

CURVE DATA Rte 73

R=2500'±

T=1655.219'

Δ=-67°00'58"

L=2924.129'

NOTES:

1. Place one Ground Anchor between CIDH Piles
2. Place one 30° & one 45° Ground Anchor between CIDH Piles
3. Place one each (Total 3) Ground Anchors between CIDH Piles
4. For 'General Notes', 'Ground Anchor Data' and 'Pile Data', see "INDEX TO PLANS" sheet
5. The Contractor shall verify all controlling field dimensions before ordering or fabricating any material.

BEGIN LOL PILES Lt Sta 10+00.00=
98'-¾"± Rt ℄ Rte 73 Sta 484+00.94±

BEGIN LOL PILES Rt Sta 17+40.23=
106'-¾"± Rt ℄ Rte 73 Sta 491+13.97±

Rte 73 SURVEY CONTROL DATA	
BC 480+53.430=	EC 509+77.560=
N 2147557.8612	N 2149523.9678
E 6127116.6980	E 6125179.2978

VERTICAL DATUM NAVD 1988

PLAN

SCALE 1" = 60'

X Ramy Rashed 06/07/2012
DESIGN ENGINEER

	BY	CHECKED
DESIGN	Y. Yoon	M. Okimura
DETAILS	T. Bittermann	M. Okimura
QUANTITIES	P. Nguyen	K. Doll

LOAD & RESISTANCE FACTOR DESIGN — LIVE LOADING: HL93 W/"LOW-BOY"; PERMIT DESIGN VEHICLE

	BY	CHECKED
LAYOUT	Y. Yoon	M. Okimura
SPECIFICATIONS	K. Ellingson	PLANS AND SPECS COMPARED K. Ellingson

ORIGINAL SCALE IN INCHES FOR REDUCED PLANS 0 1 2 3

STATE OF CALIFORNIA DEPARTMENT OF TRANSPORTATION

DIVISION OF ENGINEERING SERVICES STRUCTURE DESIGN
DESIGN BRANCH 11

BRIDGE NO. 55E0138
POST MILE 10.7/11.6

RW R488M (RETROFIT-SHEAR PILE WALL)
GENERAL PLAN

UNIT: 3587
PROJECT NUMBER & PHASE: 1212000110
CONTRACT NO.: 0M5501

DISREGARD PRINTS BEARING EARLIER REVISION DATES → 3-7-11 4-27-12 4-30-12 5-2-12

SHEET 1 OF 26

USERNAME => s124496 DATE PLOTTED => 16-JUN-2012 TIME PLOTTED => 12:25

FILE => rwr488m-a-gp.dgn

STRUCTURES DESIGN GENERAL PLAN SHEET (ENGLISH) (REV.09-01-10)

DIST	COUNTY	ROUTE	POST MILES TOTAL PROJECT	SHEET No.	TOTAL SHEETS
12	Ora	73	10.7/11.6	27	51

REGISTERED CIVIL ENGINEER 6-07-12 DATE

6-11-12
PLANS APPROVAL DATE

REGISTERED PROFESSIONAL ENGINEER YEO HOON YOON No. 73532 Exp. 12/31/12 CIVIL STATE OF CALIFORNIA

The State of California or its officers or agents shall not be responsible for the accuracy or completeness of electronic copies of this plan sheet.

INDEX TO PLANS

SHEET NO.	TITLE
1	GENERAL PLAN
2	INDEX TO PLANS
3	STRUCTURE LAYOUT NO. 1
4	STRUCTURE LAYOUT NO. 2
5	STRUCTURE LAYOUT NO. 3
6	STRUCTURE LAYOUT NO. 4
7	STRUCTURE DETAILS NO. 1 - SEGMENT A
8	STRUCTURE DETAILS NO. 2 - SEGMENT B
9	STRUCTURE DETAILS NO. 3 - SEGMENT C
10	SUB HORIZONTAL GROUND ANCHOR DETAILS
11	DRAINAGE DETAILS
12	LOG OF TEST BORINGS NO. 1 OF 15
13	LOG OF TEST BORINGS NO. 2 OF 15
14	LOG OF TEST BORINGS NO. 3 of 15
15	LOG OF TEST BORINGS NO. 4 of 15
16	LOG OF TEST BORINGS NO. 5 of 15
17	LOG OF TEST BORINGS NO. 6 of 15
18	LOG OF TEST BORINGS NO. 7 of 15
19	LOG OF TEST BORINGS NO. 8 of 15
20	LOG OF TEST BORINGS NO. 9 of 15
21	LOG OF TEST BORINGS NO. 10 of 15
22	LOG OF TEST BORINGS NO. 11 of 15
23	LOG OF TEST BORINGS NO. 12 of 15
24	LOG OF TEST BORINGS NO. 13 of 15
25	LOG OF TEST BORINGS NO. 14 of 15
26	LOG OF TEST BORINGS NO. 15 of 15

GENERAL NOTES

DESIGN: AASHTO LRFD Bridge Design Specifications, 4th Edition with California Amendments.

CONCRETE: fy = 60 ksi
f'c = 4.0 ksi

SOIL PARAMETERS: (For Ground Anchor in Capistrano Formation)
Bedrock Unit Weight = 122 lb/ft^3
Cohesion = 4000 lb/ft^2

PRESTRESSING STEEL (GROUND ANCHORS): For prestressing steel data, see "SUB HORIZONTAL GROUND ANCHOR DETAILS" sheet

STANDARD PLAN SHEET NO.
DETAIL NO.

STANDARD PLANS - DATED 2010

A10A	ACRONYMS AND ABBREVIATIONS (A-L)
A10B	ACRONYMS AND ABBREVIATIONS (M-Z)
A10C	LINES AND SYMBOLS (SHEET 1 OF 3)
A10D	LINES AND SYMBOLS (SHEET 2 OF 3)
A10E	LINES AND SYMBOLS (SHEET 3 OF 3)
A10F	LEGEND - SOIL (SHEET 1 OF 2)
A10G	LEGEND - SOIL (SHEET 2 OF 2)
A62B	LIMITS OF PAYMENT FOR EXCAVATION AND BACKFILL - BRIDGE SURCHARGE AND WALL
BO-13	BRIDGE DETAILS
D102	UNDERDRAINS

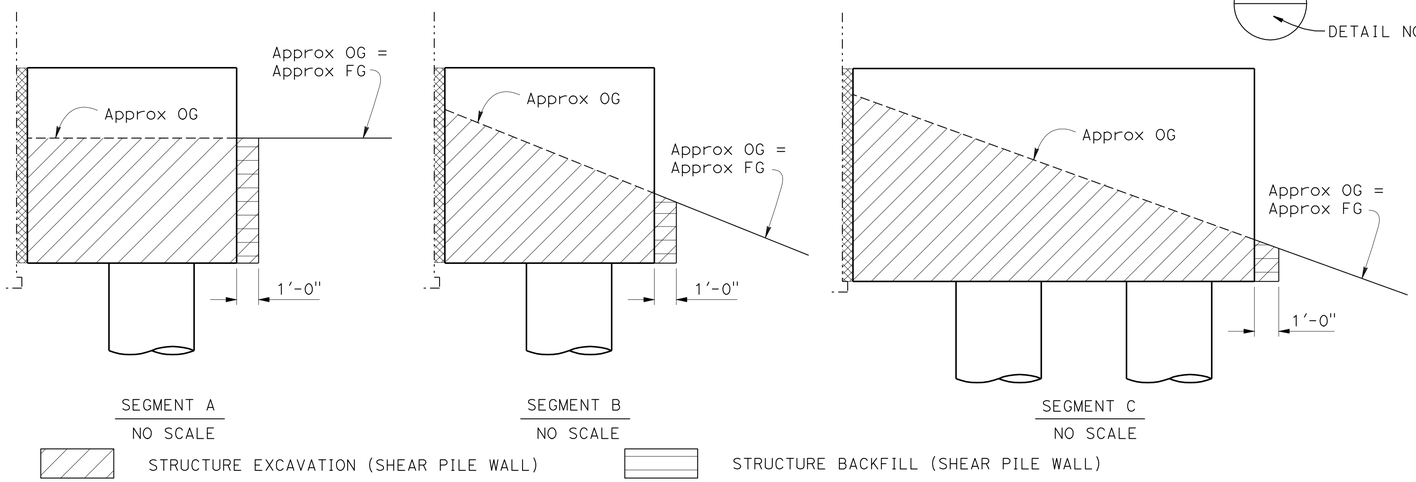

LIMITS OF PAYMENT FOR EXCAVATION AND BACKFILL

NO SCALE

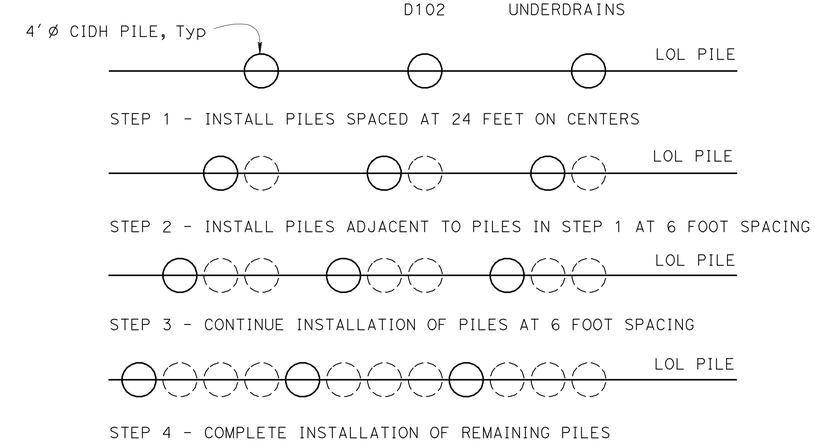

TYPICAL SEQUENCE IN CONSTRUCTION OF CIDH PILES

NOTES NO SCALE

1. Segment C shall be constructed from north end first, followed by Segment B and then Segment A.
2. Excavation to the bottom of the pile cap elevation is only allowed after concrete of CIDH piles achieves a compressive strength of 3.6 ksi . The excavation shall be conducted in 200 ft max lengths. Pile Cap and Anchors shall be installed within this 200 ft max length before proceeding with the excavation of the next 200 ft max length section. Drilled holes above the pile cut-off elevation shall be kept open by using a method such as temporary casing in order to maintain the original ground level until the excavation is complete. Two sections of 200 feet length or less may be excavated at the same time provided that 400 feet of unexcavated slope is left between the two concurrent excavations.
3. For Segment C, holes along LOL Piles Rt shall not be drilled until 7 days after concrete is placed for adjacent piles along LOL Piles Lt.
4. Caving is anticipated within the top 20 feet below the top of the existing leveling pad elevation. A method such as the use of temporary casing shall be employed to prevent caving or hole "squeezing" in the top 20 feet.

PILE DATA

LOCATION	PILE TYPE	NOMINAL RESISTANCE (KIPS)		CUT- OFF ELEV (FT)	DESIGN TIP ELEVATION (FT)	SPECIFIED TIP ELEVATION (FT)
		COMPRESSION	TENSION			
SEGMENT A	48" Ø CIDH	220	N/A	VARIES	244 (a) 264 (c) 219 (d)	219
SEGMENT B	48" Ø CIDH	580	N/A	VARIES	231.5 (a) 251.5 (c) 219 (d)	219
SEGMENT C	48" Ø CIDH	690	N/A	VARIES	224 (a) 229 (c) 219 (d)	219

NOTES:

1. Design Tip elevations are controlled by (a) Compression, (b) Tension, (c) Settlement, (d) Lateral Load.
2. The CIDH specified tip elevation shall not be raised.

GROUND ANCHOR DATA

LOCATION	FDL	FTL	LL	Min UNBONDED LENGTH (FT)
SEGMENT A	223	223	150	40
SEGMENT B	300	300	200	60
SEGMENT C FROM Sta 17+41 TO Sta 19+30	300	300	200	95
SEGMENT C FROM Sta 19+30 TO Sta 19+96	300	300	200	110

LEGEND:
FDL = Factored Design Load on ground anchor (kips)
FTL = Factored Test Load (kips)
LL = Lock-Off Load (kips)

	BY	CHECKED
DESIGN	Y. Yoon	M. Okimura
DETAILS	L. Goldthwait	M. Okimura
QUANTITIES	P. Nguyen	K. Doll

STATE OF CALIFORNIA
DEPARTMENT OF TRANSPORTATION

DIVISION OF ENGINEERING SERVICES
STRUCTURE DESIGN
DESIGN BRANCH 11

BRIDGE NO. 55E0138
POST MILE 10.7/11.6

RW R488M (RETROFIT-SHEAR PILE WALL)

INDEX TO PLANS

STRUCTURES DESIGN DETAIL SHEET (ENGLISH) (REV. 09-01-10)

ORIGINAL SCALE IN INCHES FOR REDUCED PLANS 0 1 2 3

UNIT: 3587
PROJECT NUMBER & PHASE: 1212000110
CONTRACT NO.: OM5501

DISREGARD PRINTS BEARING EARLIER REVISION DATES

REVISION DATES 2/13/12 3/09/12 4/26/12 2/04/12

SHEET 2 OF 26

FILE => rwr488m-g-itp.dgn

DATE PLOTTED => 16-JUN-2012 TIME PLOTTED => 12:15

DIST	COUNTY	ROUTE	POST MILES TOTAL PROJECT	SHEET No.	TOTAL SHEETS
12	Ora	73	10.7/11.6	28	51

REGISTERED CIVIL ENGINEER 6-07-12 DATE

6-11-12
PLANS APPROVAL DATE

REGISTERED PROFESSIONAL ENGINEER YEO HOON YOON No. 73532 Exp. 12/31/12 CIVIL STATE OF CALIFORNIA

The State of California or its officers or agents shall not be responsible for the accuracy or completeness of electronic copies of this plan sheet.

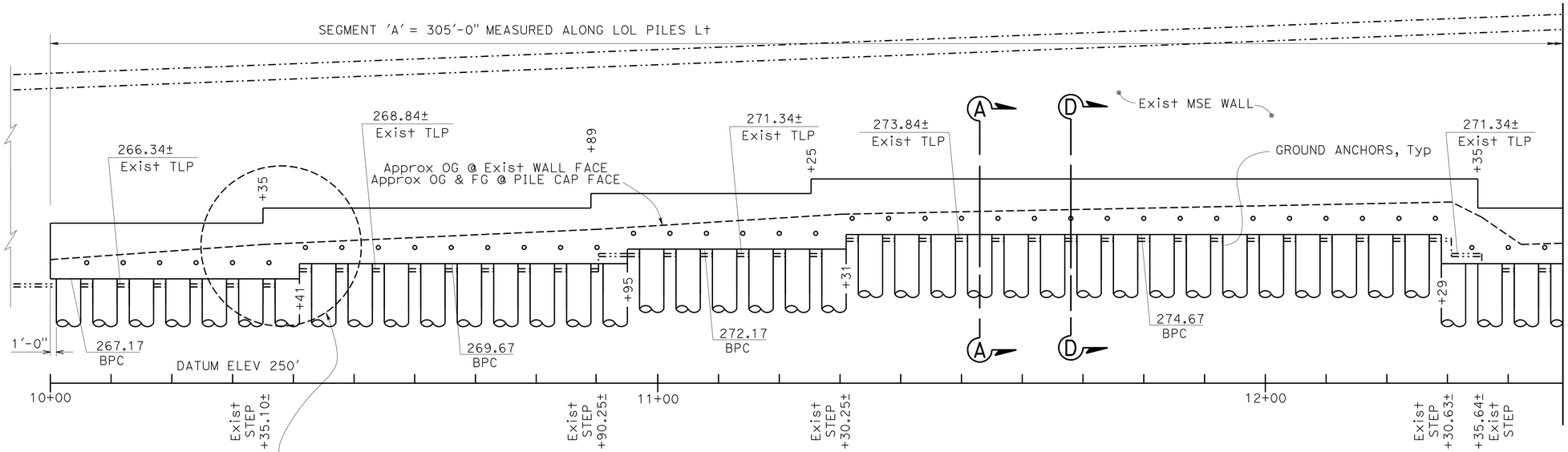

DEVELOPED ELEVATION

SCALE: 1"=10'

NOTES:

1. Existing drainages as shown are approximate. Contractor shall verify field location.
2. For Sections A-A & D-D, see "STRUCTURE DETAILS NO. 1 -SEGMENT A" sheet
3. For accurate description of all existing utilities, see "ROAD PLANS"
4. Lengths of ground anchors as shown are approximate. Contractor shall determine the required lengths.
5. TLP = Top of leveling pad

   BPC = Bottom of Pile Cap

LEGEND (for 'PLAN'):

- ○ Denotes Exist Riser (to be removed)
- ● Denotes New Riser
- ◯ 4'-0" CIDH Pile
- ------ Denotes New Drainage Pipes

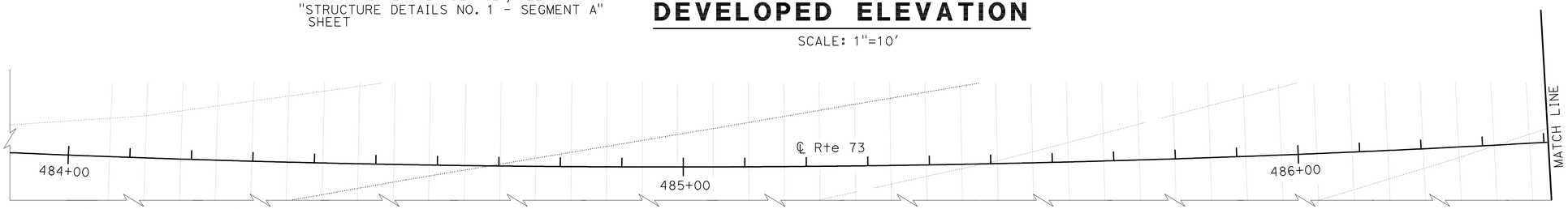

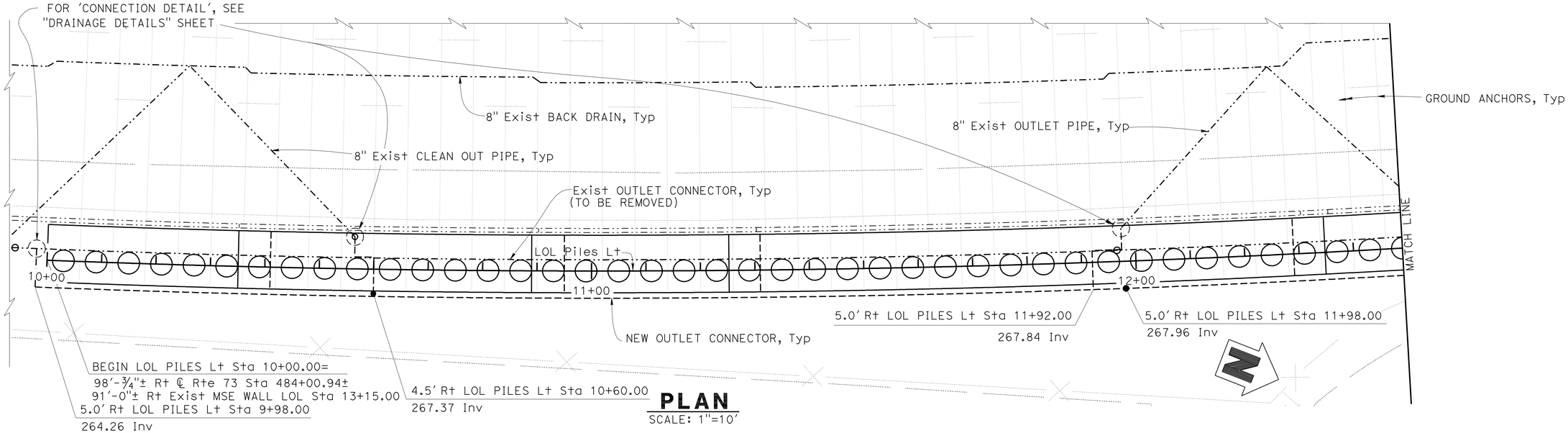

PLAN

SCALE: 1"=10'

	BY	CHECKED
DESIGN	Y. Yoon	M. Okimura
DETAILS	T. Bittermann	M. Okimura
QUANTITIES	P. Nguyen	K. Doll

STATE OF CALIFORNIA
DEPARTMENT OF TRANSPORTATION

DIVISION OF ENGINEERING SERVICES
STRUCTURE DESIGN
DESIGN BRANCH 11

BRIDGE NO. 55E0138
POST MILE 10.7/11.6

RW R488M (RETROFIT-SHEAR PILE WALL)

STRUCTURE LAYOUT NO. 1

STRUCTURES DESIGN DETAIL SHEET (ENGLISH) (REV. 09-01-10)

ORIGINAL SCALE IN INCHES FOR REDUCED PLANS 0 1 2 3

UNIT: 3587
PROJECT NUMBER & PHASE: 1212000110
CONTRACT NO.: 0M5501

DISREGARD PRINTS BEARING EARLIER REVISION DATES

REVISION DATES: 3-02-12 4-24-12 2-22-12 2-13-12

SHEET 3 OF 26

FILE => rwr488m-d-str_lo1.dgn

USERNAME => s124496 DATE PLOTTED => 16-JUN-2012 TIME PLOTTED => 12:15

DIST	COUNTY	ROUTE	POST MILES TOTAL PROJECT	SHEET No.	TOTAL SHEETS
12	Ora	73	10.7/11.6	29	51

REGISTERED CIVIL ENGINEER 6-07-12 DATE

6-11-12
PLANS APPROVAL DATE

REGISTERED PROFESSIONAL ENGINEER YEO HOON YOON No. 73532 Exp. 12/31/12 CIVIL STATE OF CALIFORNIA

The State of California or its officers or agents shall not be responsible for the accuracy or completeness of electronic copies of this plan sheet.

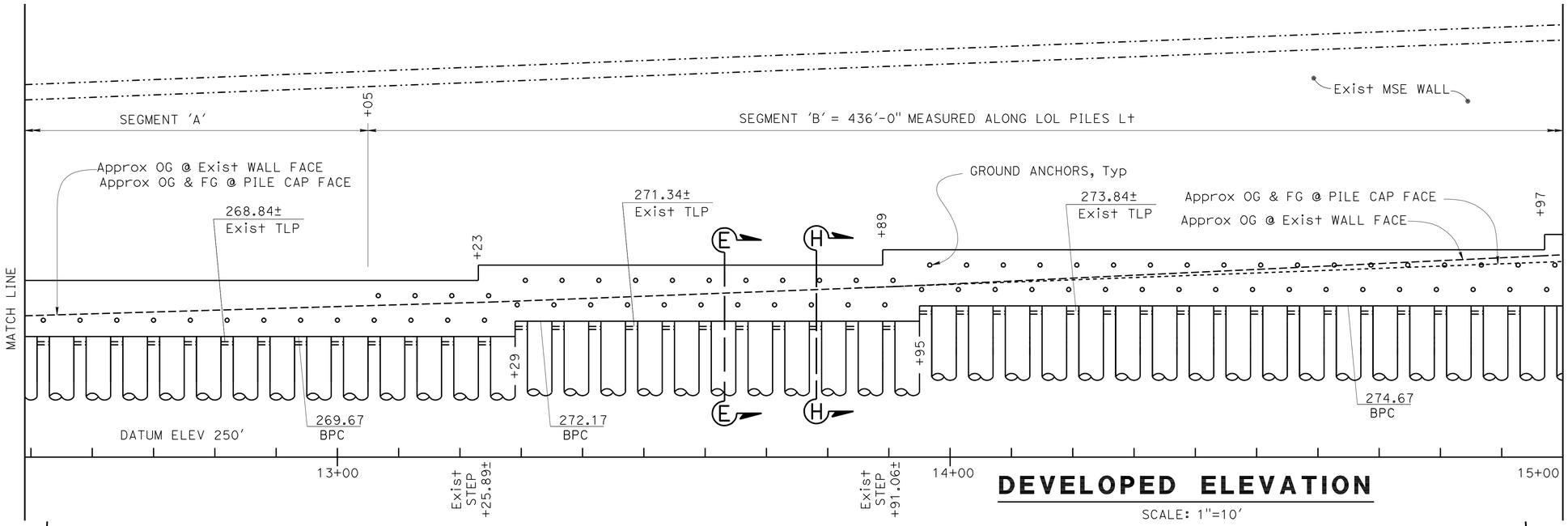

DEVELOPED ELEVATION

SCALE: 1"=10'

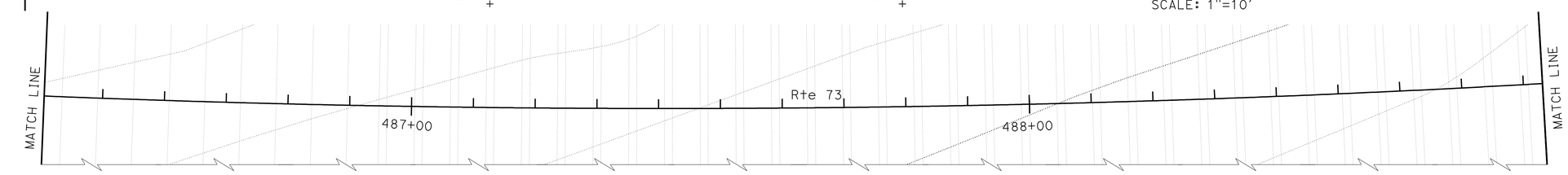

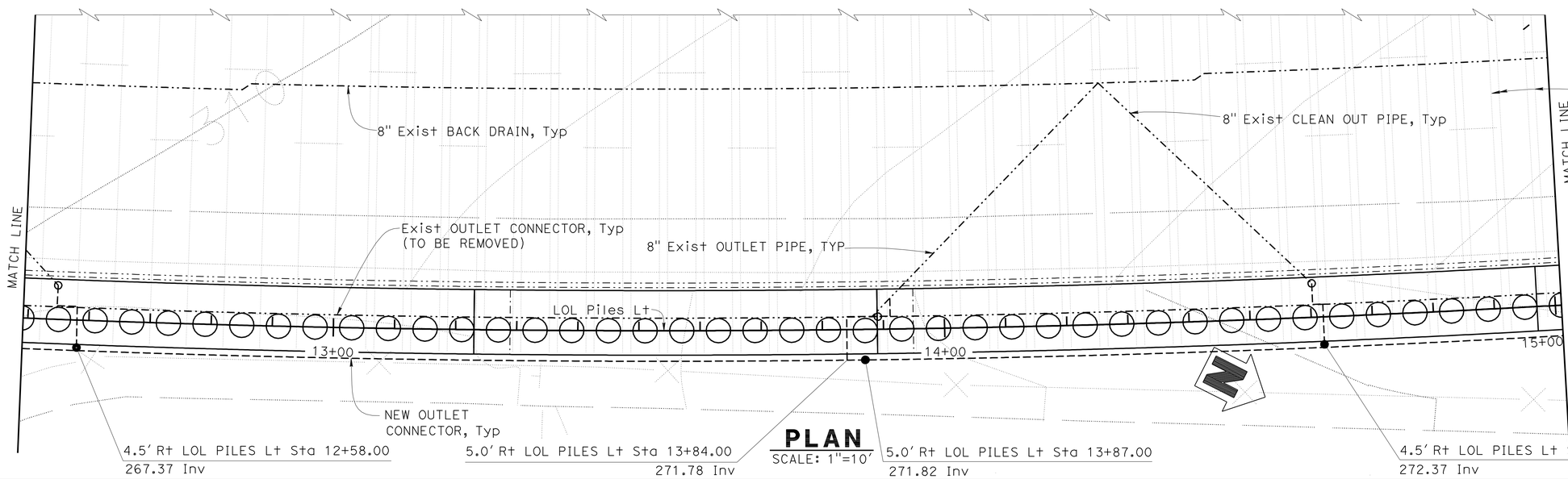

PLAN

SCALE: 1"=10'

NOTES:

1. Existing drainages as shown are approximate. Contractor shall verify field location.
2. For Sections E-E & H-H, see "STRUCTURE DETAILS NO. 2 -SEGMENT B" sheet
3. For accurate description of all existing utilities, see "ROAD PLANS"
4. Lengths of ground anchors as shown are approximate. Contractor shall determine the required lengths.
5. TLP = Top of leveling pad

   BPC = Bottom of Pile Cap

LEGEND (for 'PLAN'):

- ○ Denotes Exist Riser (to be removed)
- ● Denotes New Riser
- ◯ 4'-0" CIDH Pile
- ------ Denotes New Drainage Pipes

	BY	CHECKED
DESIGN	Y. Yoon	M. Okimura
DETAILS	T. Bittermann	M. Okimura
QUANTITIES	P. Nguyen	K. Doll

STATE OF CALIFORNIA
DEPARTMENT OF TRANSPORTATION

DIVISION OF ENGINEERING SERVICES
STRUCTURE DESIGN
DESIGN BRANCH 11

BRIDGE NO. 55E0138
POST MILE 10.7/11.6

RW R488M (RETROFIT-SHEAR PILE WALL)

STRUCTURE LAYOUT NO. 2

STRUCTURES DESIGN DETAIL SHEET (ENGLISH) (REV. 09-01-10)

ORIGINAL SCALE IN INCHES FOR REDUCED PLANS 0 1 2 3

UNIT: 3587
PROJECT NUMBER & PHASE: 1212000110
CONTRACT NO.: 0M5501

DISREGARD PRINTS BEARING EARLIER REVISION DATES

REVISION DATES: 3-09-12 4-20-12 2-08-12 2-14-12

SHEET 4 OF 26

FILE => rwr488m-d-str_lo2.dgn

USERNAME => s124496 DATE PLOTTED => 16-JUN-2012 TIME PLOTTED => 12:15

DIST	COUNTY	ROUTE	POST MILES TOTAL PROJECT	SHEET No.	TOTAL SHEETS
12	Ora	73	10.7/11.6	30	51

REGISTERED CIVIL ENGINEER — DATE 6-07-12

6-11-12
PLANS APPROVAL DATE

REGISTERED PROFESSIONAL ENGINEER — YEO HOON YOON — No. 73532 — Exp. 12/31/12 — CIVIL — STATE OF CALIFORNIA

The State of California or its officers or agents shall not be responsible for the accuracy or completeness of electronic copies of this plan sheet.

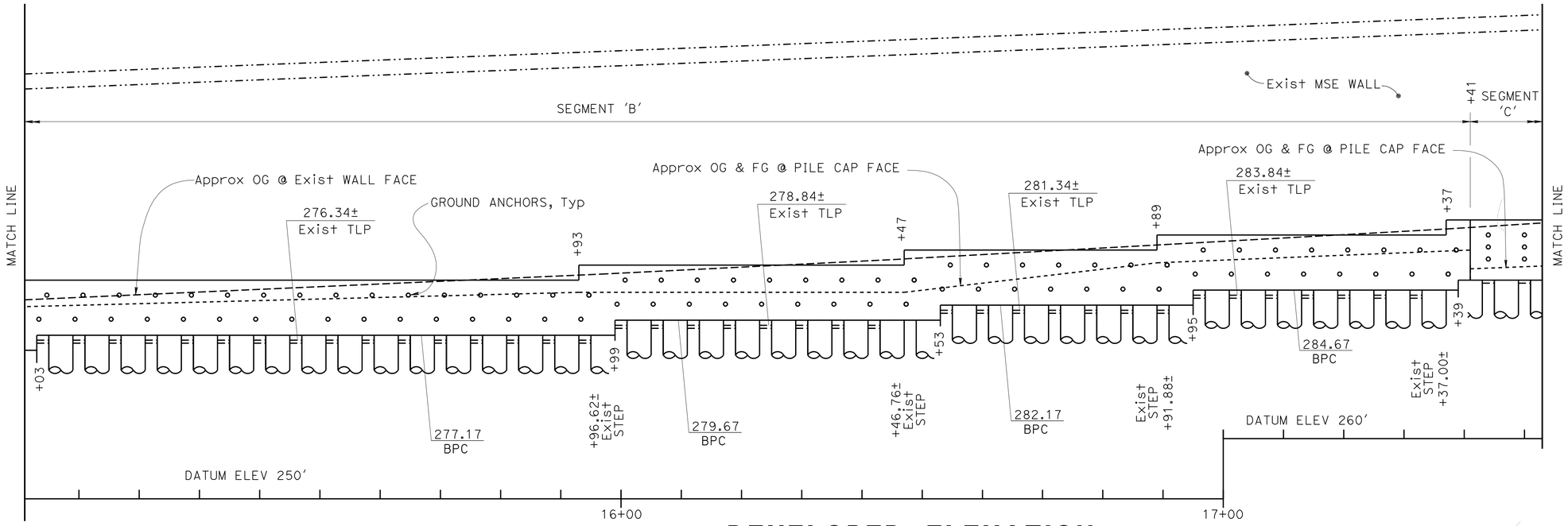

DEVELOPED ELEVATION

SCALE: 1"=10'

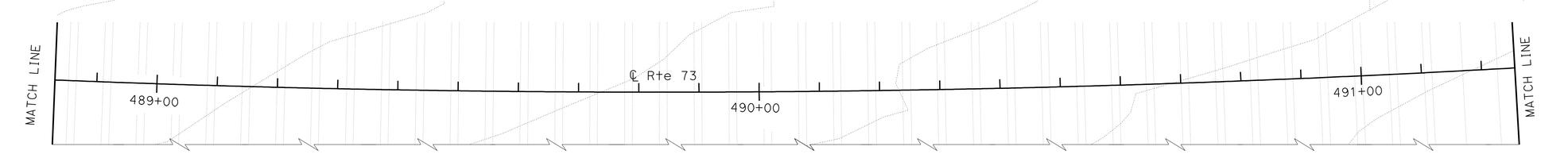

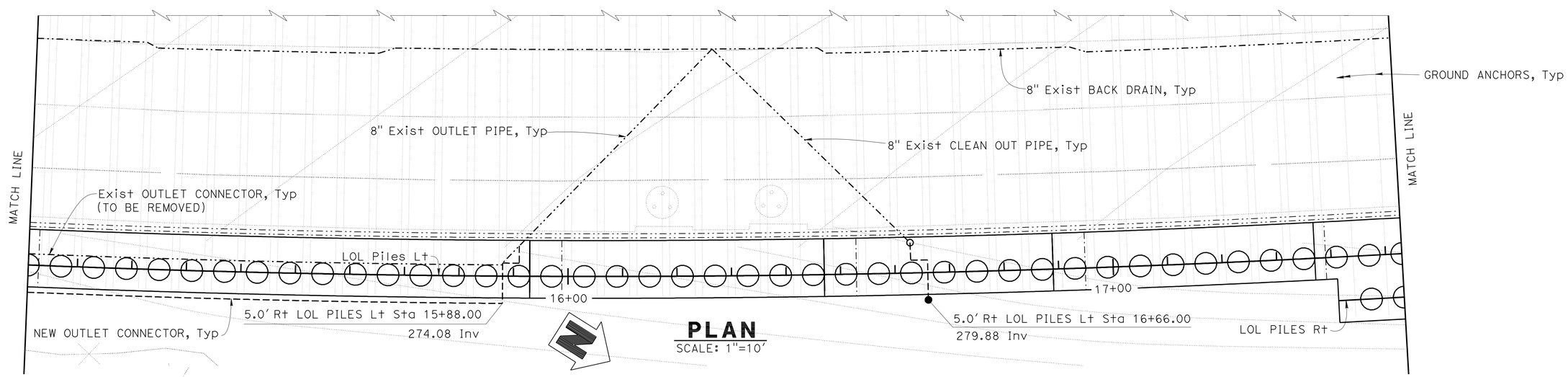

PLAN

SCALE: 1"=10'

NOTES:

1. Existing drainages as shown are approximate. Contractor shall verify field location.
2. For accurate description of all existing utilities, see "ROAD PLANS"
3. Lengths of ground anchors as shown are approximate. Contractor shall determine the required lengths.
4. TLP = Top of leveling pad

   BPC = Bottom of Pile Cap

LEGEND (for 'PLAN'):

- ○ Denotes Exist Riser (to be removed)
- ● Denotes New Riser
- ◯ 4'-0" CIDH Pile
- ------ Denotes New Drainage Pipes

	BY	CHECKED
DESIGN	Y. Yoon	M. Okimura
DETAILS	T. Bittermann	M. Okimura
QUANTITIES	P. Nguyen	K. Doll

STATE OF CALIFORNIA
DEPARTMENT OF TRANSPORTATION

DIVISION OF ENGINEERING SERVICES
STRUCTURE DESIGN
DESIGN BRANCH 11

BRIDGE NO. 55E0138
POST MILE 10.7/11.6

RW R488M (RETROFIT-SHEAR PILE WALL)
STRUCTURE LAYOUT NO.3

STRUCTURES DESIGN DETAIL SHEET (ENGLISH) (REV. 09-01-10)

ORIGINAL SCALE IN INCHES FOR REDUCED PLANS 0 1 2 3

UNIT: 3587
PROJECT NUMBER & PHASE: 1212000110
CONTRACT NO.: 0M5501

DISREGARD PRINTS BEARING EARLIER REVISION DATES

REVISION DATES: 3-09-12 4-20-12 2-2-12 2-6-12

SHEET 5 OF 26

FILE => rwr488m-d-str_lo3.dgn

USERNAME => s124496 DATE PLOTTED => 16-JUN-2012 TIME PLOTTED => 12:15

DIST	COUNTY	ROUTE	POST MILES TOTAL PROJECT	SHEET No.	TOTAL SHEETS
12	Ora	73	10.7/11.6	31	51

REGISTERED CIVIL ENGINEER 6-07-12 DATE

6-11-12
PLANS APPROVAL DATE

REGISTERED PROFESSIONAL ENGINEER YEO HOON YOON No. 73532 Exp. 12/31/12 CIVIL STATE OF CALIFORNIA

The State of California or its officers or agents shall not be responsible for the accuracy or completeness of electronic copies of this plan sheet.

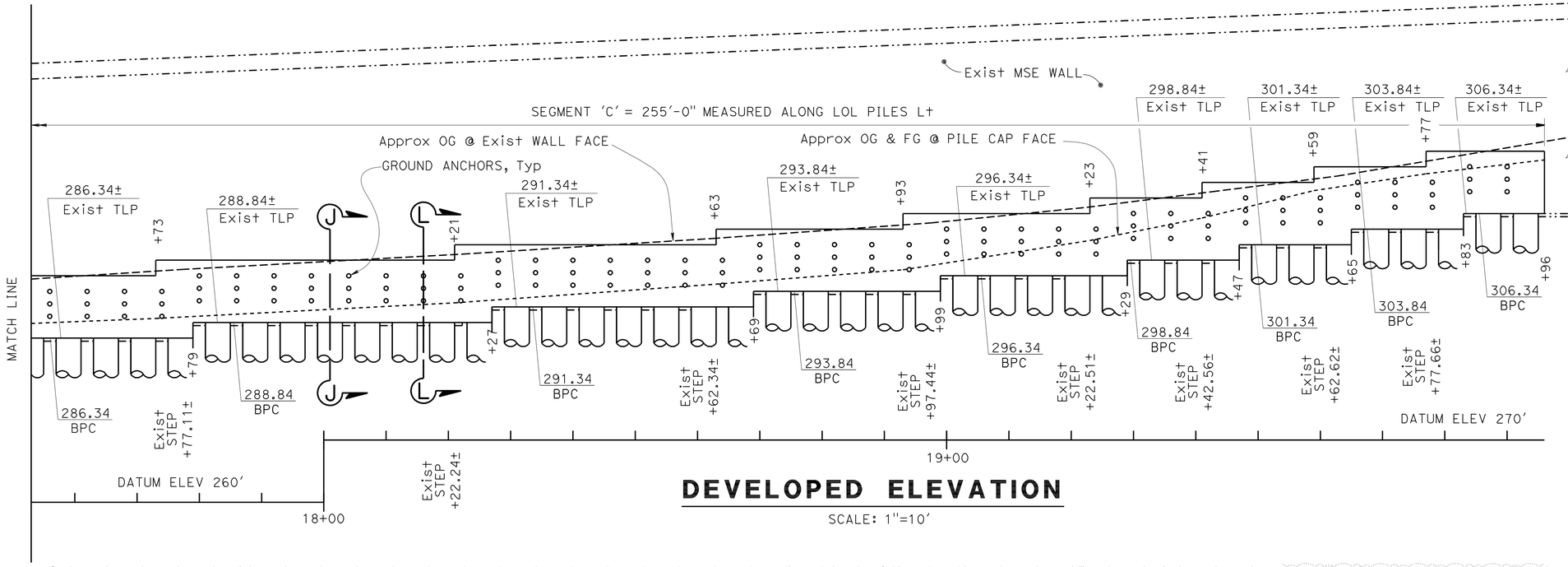

DEVELOPED ELEVATION

SCALE: 1"=10'

NOTES:

1. Existing drainages as shown are approximate. Contractor shall verify field location.
2. For Sections J-J & L-L, see "STRUCTURE DETAILS NO. 3 -SEGMENT C" sheet
3. For accurate description of all existing utilities, see "ROAD PLANS"
4. Lengths of ground anchors as shown are approximate. Contractor shall determine the required lengths.
5. TLP = Top of leveling pad
   BPC = Bottom of Pile Cap

LEGEND (for 'PLAN'):

- ○ Denotes Exist Riser (to be removed)
- ● Denotes New Riser
- ◯ 4'-0" CIDH Pile
- ------ Denotes New Drainage Pipes

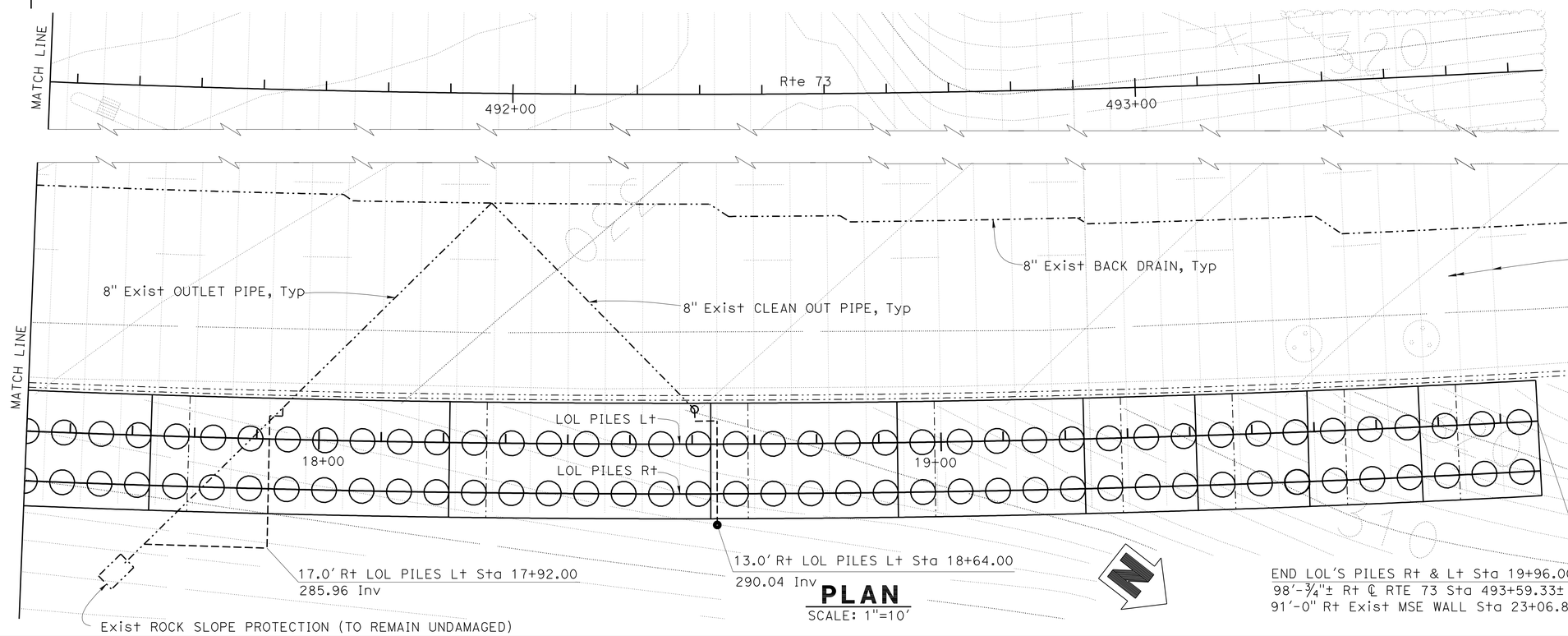

PLAN

SCALE: 1"=10'

	BY	CHECKED
DESIGN	Y. Yoon	M. Okimura
DETAILS	T. Bittermann	M. Okimura
QUANTITIES	P. Nguyen	K. Doll

STATE OF CALIFORNIA
DEPARTMENT OF TRANSPORTATION

DIVISION OF ENGINEERING SERVICES
STRUCTURE DESIGN
DESIGN BRANCH 11

BRIDGE NO. 55E0138
POST MILE 10.7/11.6

RW R488M (RETROFIT-SHEAR PILE WALL)

STRUCTURE LAYOUT NO. 4

STRUCTURES DESIGN DETAIL SHEET (ENGLISH) (REV. 09-01-10)

ORIGINAL SCALE IN INCHES FOR REDUCED PLANS 0 1 2 3

UNIT: 3587
PROJECT NUMBER & PHASE: 1212000110
CONTRACT NO.: OM5501

DISREGARD PRINTS BEARING EARLIER REVISION DATES

REVISION DATES: 3-09-12 4-20-12 2-2-12 2-6-12

SHEET 6 OF 26

FILE => rwr488m-d-str_lo4.dgn

USERNAME => s124496 DATE PLOTTED => 16-JUN-2012 TIME PLOTTED => 12:15

DIST	COUNTY	ROUTE	POST MILES TOTAL PROJECT	SHEET No.	TOTAL SHEETS
12	Ora	73	10.7/11.6	32	51

REGISTERED CIVIL ENGINEER 6-07-12 DATE

6-11-12
PLANS APPROVAL DATE

REGISTERED PROFESSIONAL ENGINEER YEO HOON YOON No. 73532 Exp. 12/31/12 CIVIL STATE OF CALIFORNIA

The State of California or its officers or agents shall not be responsible for the accuracy or completeness of electronic copies of this plan sheet.

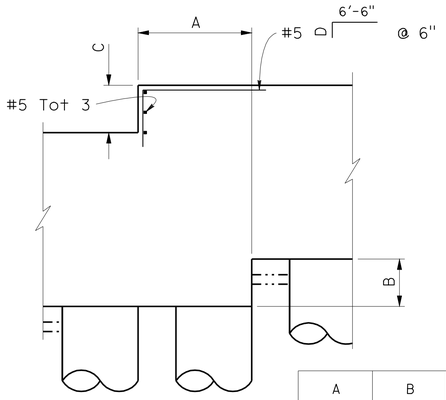

	A	B	C	D
ALL STEPS EXCEPT STEPS @ Sta 12+35.00 AND Sta 17+37.00	6'-0"	2'-6"	2'-6"	3'-0"
STEP @ Sta 12+35.00	6'-0"	5'-0"	5'-0"	5'-5"
STEP @ Sta 17+37.00	2'-0"	1'-8"	2'-6"	3'-0"

TYPICAL STEP DETAIL

1/4"=1'-0"

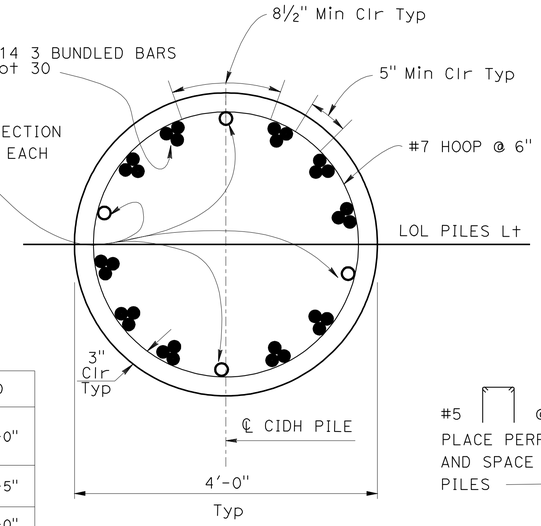

SECTION C-C

1"=1'-0"

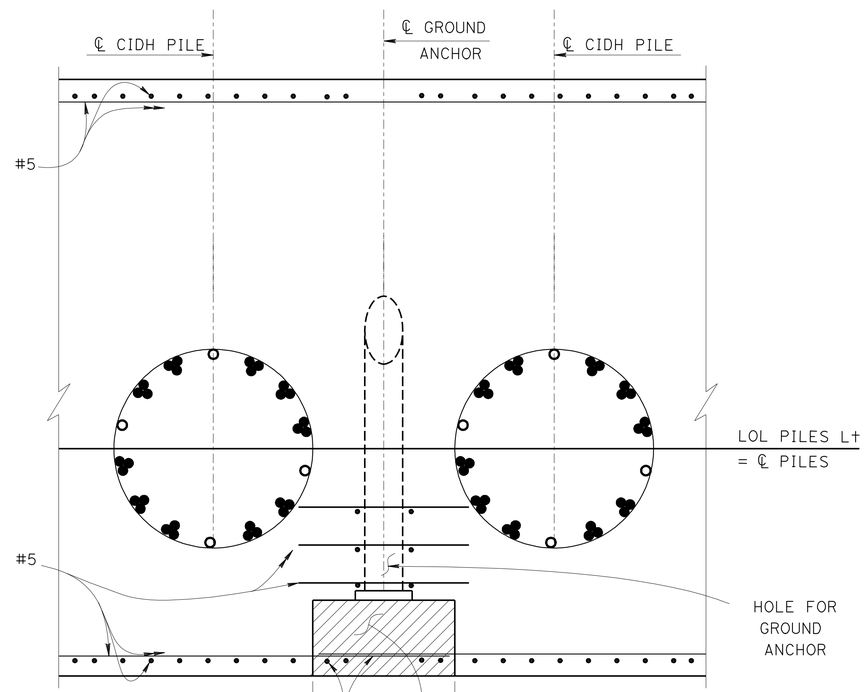

SECTION B-B

3/4"=1'-0"

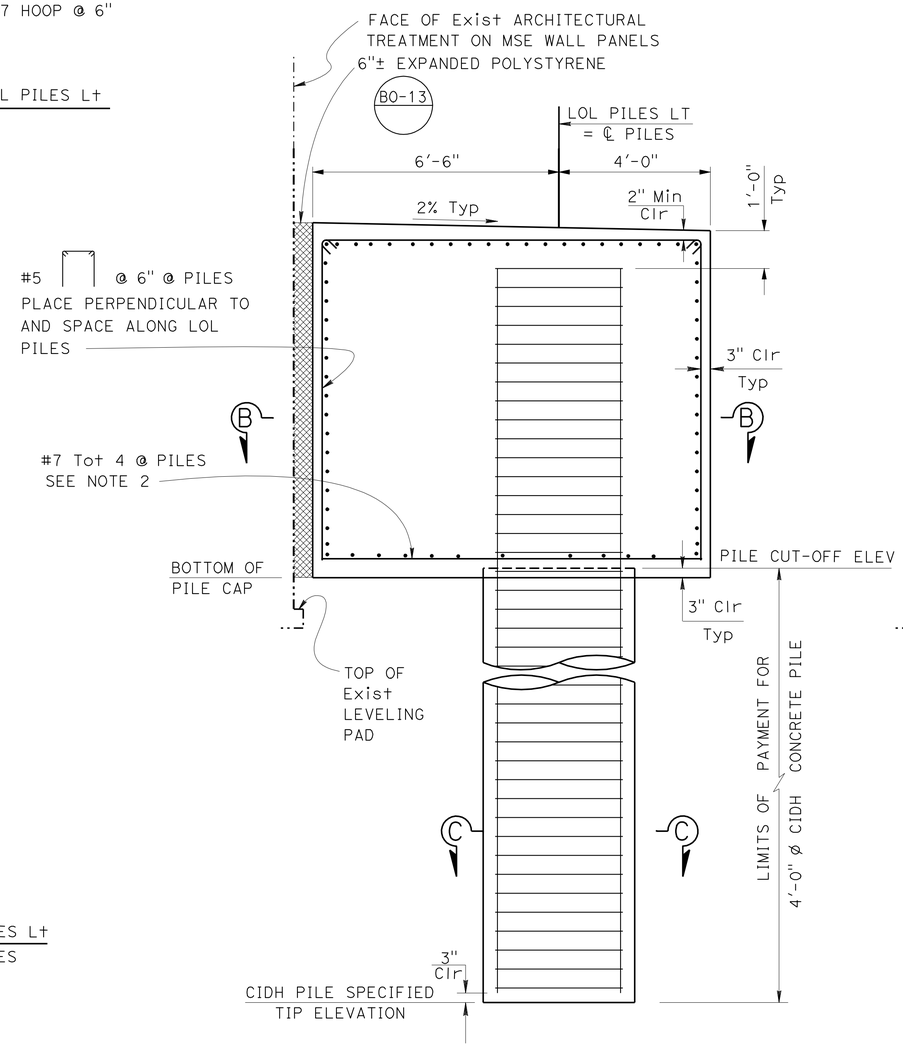

SECTION A-A

1/2"=1'-0"

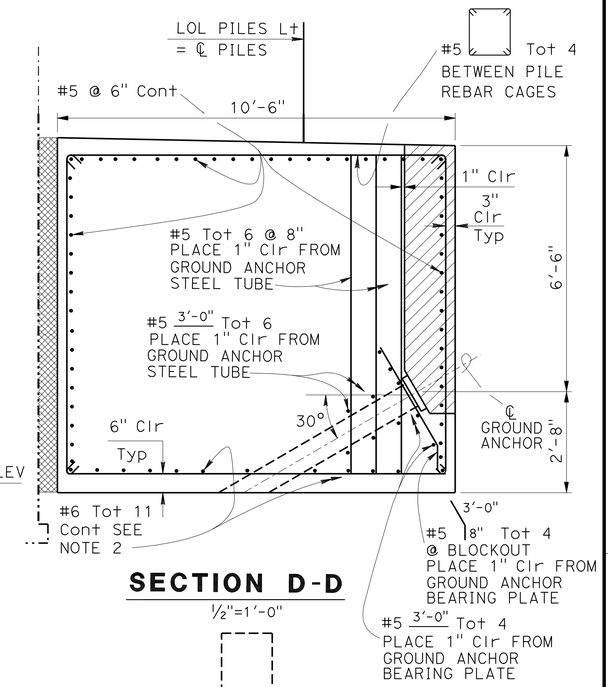

SECTION D-D

1/2"=1'-0"

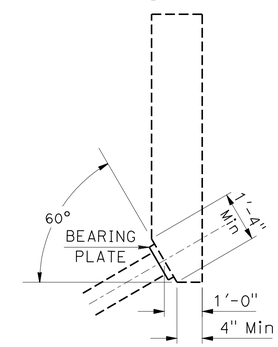

BLOCKOUT SIDE VIEW

1/2"=1'-0"

NOTES

1. All horizontal bar reinforcing steels are not shown in Section B-B
2. Horizontal bar reinforcing steels may be adjusted to clear the vertical rebars in CIDH Piles
3. Optional vertical construction joint may be allowed at the face of the CIDH Pile as necessary during Pile Cap construction
4. All the bar reinforcing steels for CIDH Piles shall be spliced as service splice
5. All the horizontal bar reinforcing steels parallel to LOL Piles and vertical bar reinforcing steels in the steps shall extend to 3" off the Pile Cap concrete face

	BY	CHECKED
DESIGN	Y. Yoon	M. Okimura
DETAILS	L. Goldthwait	M. Okimura
QUANTITIES	P. Nguyen	K. Doll

STATE OF CALIFORNIA
DEPARTMENT OF TRANSPORTATION

DIVISION OF ENGINEERING SERVICES
STRUCTURE DESIGN
DESIGN BRANCH 11

BRIDGE NO. 55E0138
POST MILE 10.7/11.6

RW R488M (RETROFIT-SHEAR PILE WALL)
STRUCTURE DETAILS NO. 1 - SEGMENT A

STRUCTURES DESIGN DETAIL SHEET (ENGLISH) (REV. 09-01-10)

ORIGINAL SCALE IN INCHES FOR REDUCED PLANS 0 1 2 3

UNIT: 3587
PROJECT NUMBER & PHASE: 1212000110
CONTRACT NO.: OM5501

DISREGARD PRINTS BEARING EARLIER REVISION DATES

REVISION DATES 2/17/12 3/12/12 4/30/12 6-06-12

SHEET 7 OF 26

FILE => rwr488m-p-pile_dt01.dgn

DATE PLOTTED => 16-JUN-2012 TIME PLOTTED => 12:15

DIST	COUNTY	ROUTE	POST MILES TOTAL PROJECT	SHEET No.	TOTAL SHEETS
12	Ora	73	10.7/11.6	33	51

REGISTERED CIVIL ENGINEER 6-07-12 DATE

6-11-12
PLANS APPROVAL DATE

REGISTERED PROFESSIONAL ENGINEER
YEO HOON YOON
No. 73532
Exp. 12/31/12
CIVIL
STATE OF CALIFORNIA

The State of California or its officers or agents shall not be responsible for the accuracy or completeness of electronic copies of this plan sheet.

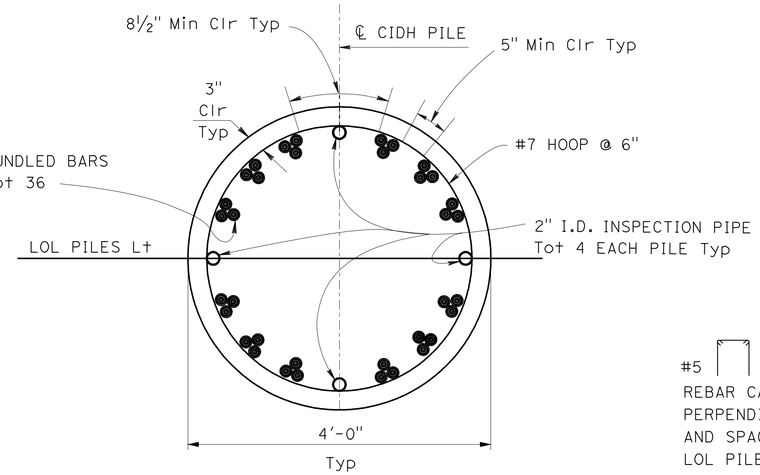

SECTION G-G

1"=1'-0"

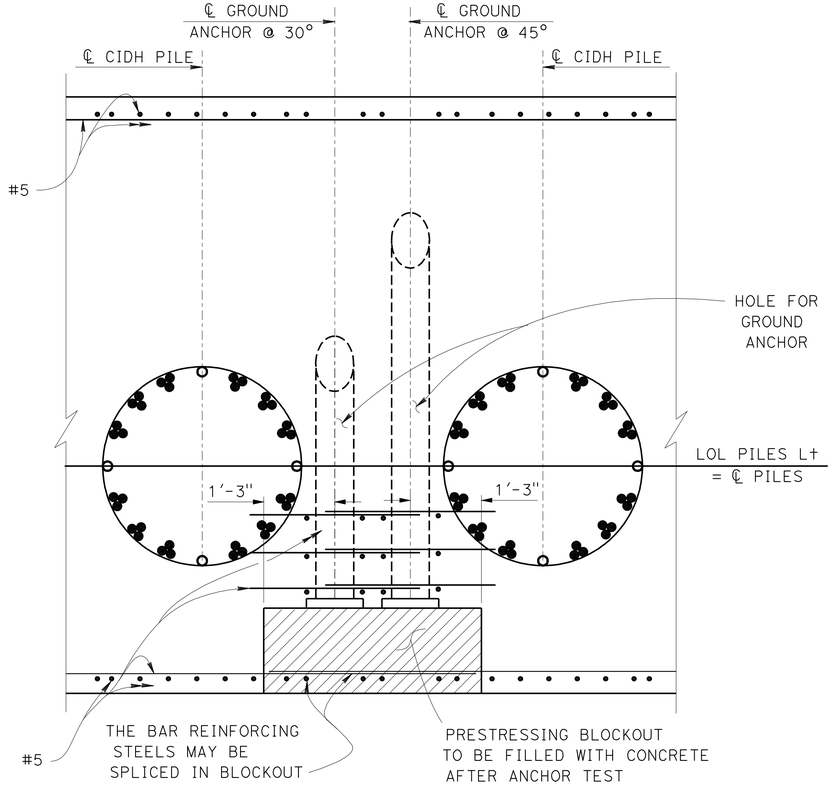

SECTION F-F

¾"=1'-0"

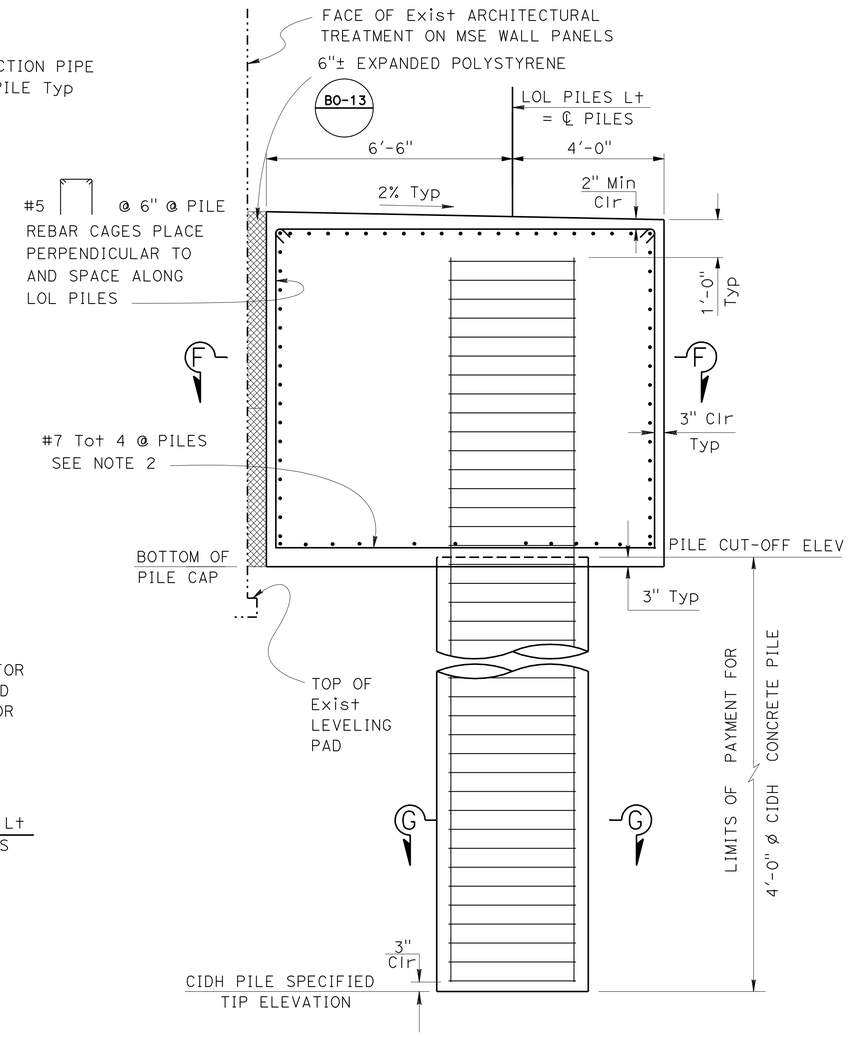

SECTION E-E

½"=1'-0"

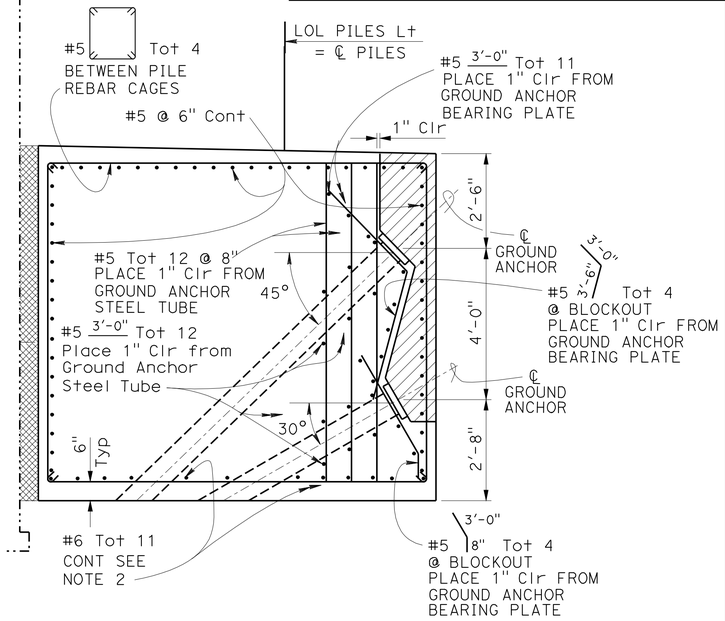

SECTION H-H

½"=1'-0"

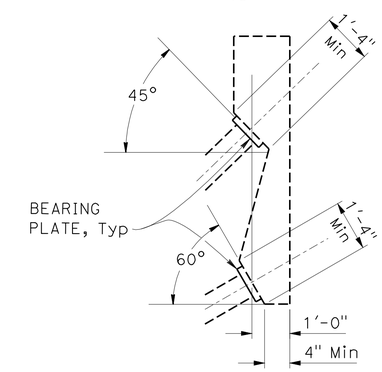

BLOCKOUT SIDE VIEW

½"=1'-0"

NOTES

1. All horizontal bar reinforcing steels are not shown in Section F-F.
2. Horizontal bar reinforcing steels may be adjusted to clear the vertical rebars in CIDH Piles
3. Optional vertical construction joint may be allowed at the face of the CIDH Pile as necessary during Pile Cap construction
4. All the bar reinforcing steels for CIDH Piles shall be spliced as service splice

	BY	CHECKED
DESIGN	Y. Yoon	M. Okimura
DETAILS	L. Goldthwait - JH	M. Okimura
QUANTITIES	P. Nguyen	K. Doll

STATE OF CALIFORNIA
DEPARTMENT OF TRANSPORTATION

DIVISION OF ENGINEERING SERVICES
STRUCTURE DESIGN
DESIGN BRANCH 11

BRIDGE NO. 55E0138
POST MILE 10.7/11.6

RW R488M (RETROFIT-SHEAR PILE WALL)
STRUCTURE DETAILS NO. 2 - SEGMENT B

STRUCTURES DESIGN DETAIL SHEET (ENGLISH) (REV. 09-01-10)

ORIGINAL SCALE IN INCHES FOR REDUCED PLANS 0 1 2 3

UNIT: 3587
PROJECT NUMBER & PHASE: 1212000110
CONTRACT NO.: OM5501

DISREGARD PRINTS BEARING EARLIER REVISION DATES

REVISION DATES 3/12/12 4/20/12 5/01/12 2-08-12

SHEET 8 OF 26

FILE => rwr488m-p-pile_dt02.dgn

DATE PLOTTED => 16-JUN-2012 TIME PLOTTED => 12:15

DIST	COUNTY	ROUTE	POST MILES TOTAL PROJECT	SHEET No.	TOTAL SHEETS
12	Ora	73	10.7/11.6	34	51

REGISTERED CIVIL ENGINEER 6-07-12 DATE

6-11-12
PLANS APPROVAL DATE

REGISTERED PROFESSIONAL ENGINEER YEO HOON YOON No. 73532 Exp. 12/31/12 CIVIL STATE OF CALIFORNIA

The State of California or its officers or agents shall not be responsible for the accuracy or completeness of electronic copies of this plan sheet.

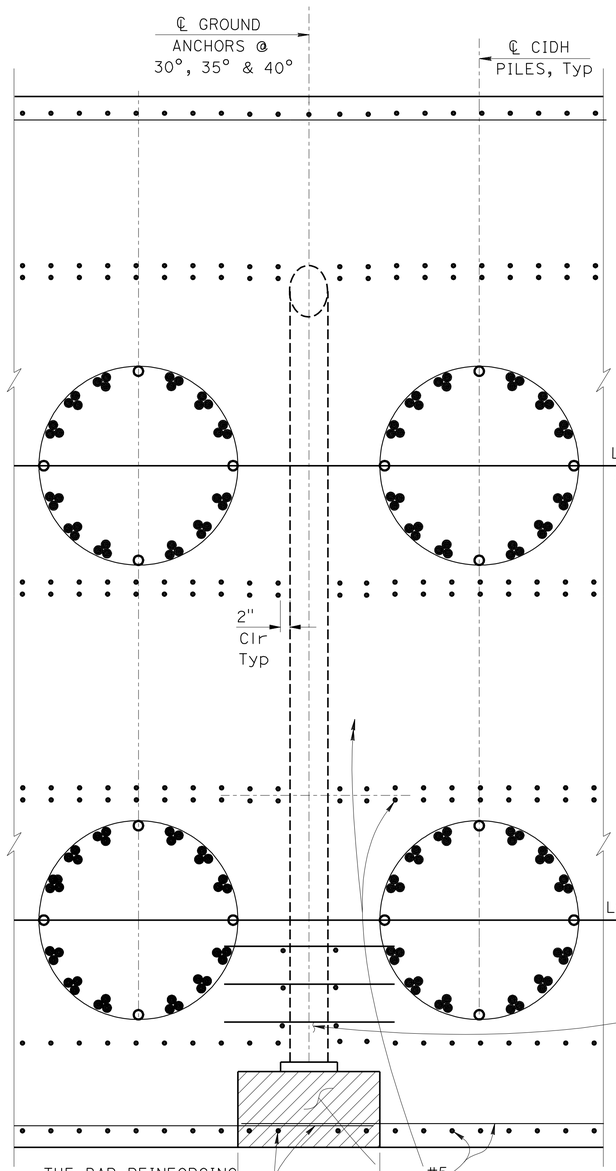

SECTION K-K

¾"=1'-0"

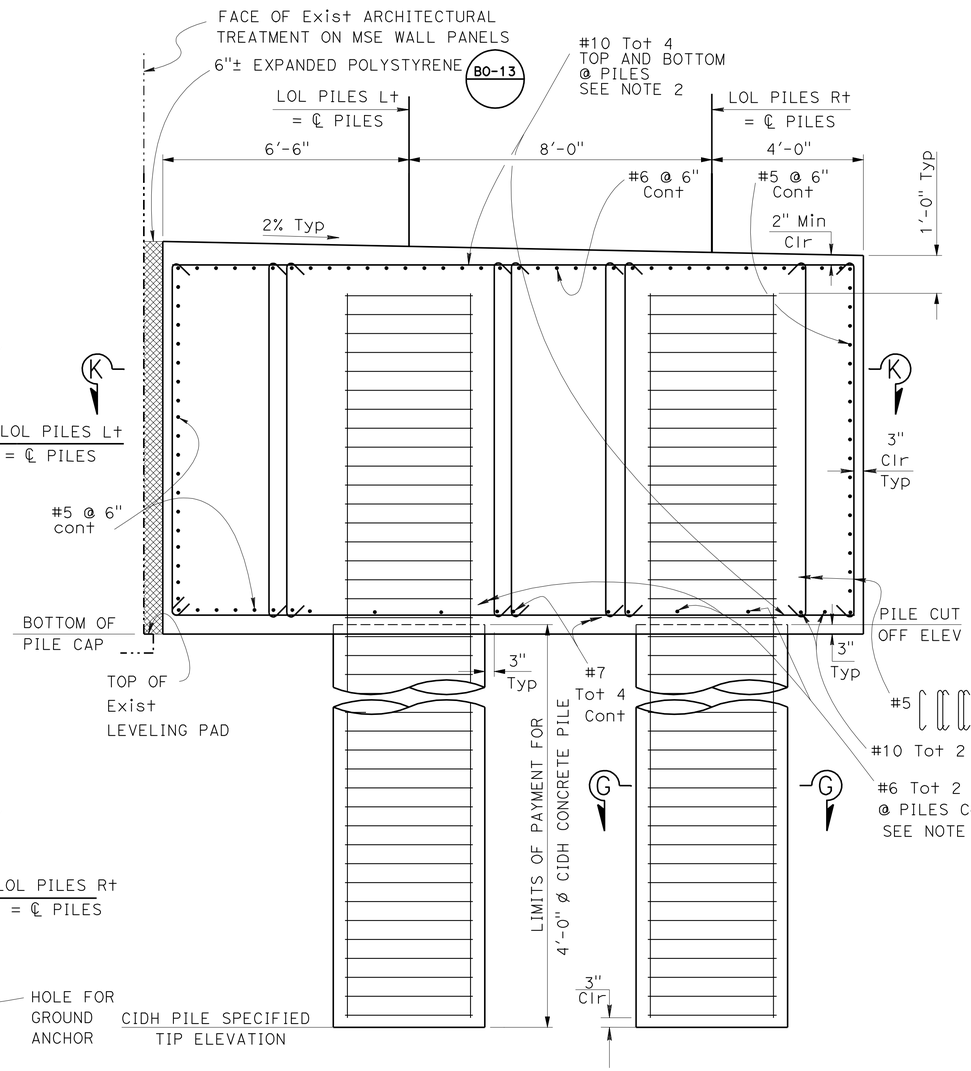

SECTION J-J

½"=1'-0"

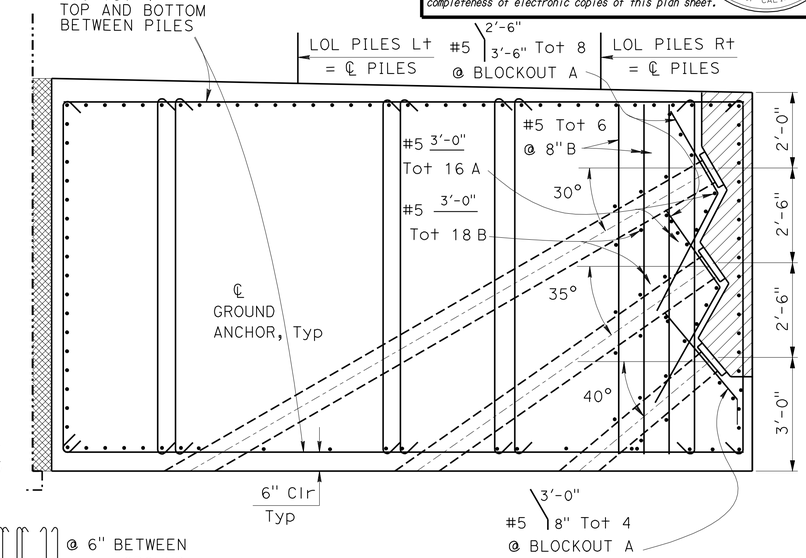

SECTION L-L

½"=1'-0"

KEY

A - PLACE 1" Clr FROM GROUND ANCHOR BEARING PLATE

B - PLACE 1" Clr FROM GROUND ANCHOR STEEL TUBE

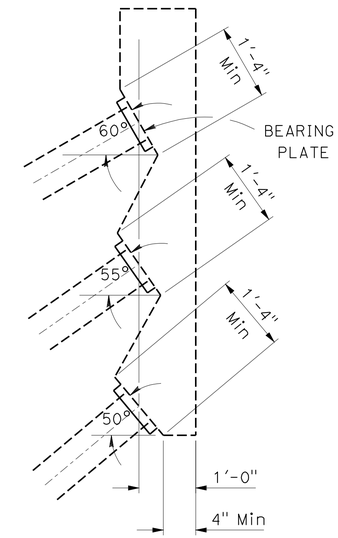

BLOCKOUT SIDE VIEW

¾"=1'-0"

NOTE

1. All horizontal bar reinforcing steels are not shown in Section K-K
2. Horizontal bar reinforcing steels may be adjusted to clear the vertical rebars in CIDH Piles
3. For Section G-G, see "STRUCTURE DETAILS NO. 2 - SEGMENT B" sheet
4. Optional vertical construction joint may be allowed at the face of the CIDH Pile as necessary during Pile Cap construction
5. All the bar reinforcing steels for CIDH Piles shall be spliced as service splice

	BY	CHECKED
DESIGN	Y. Yoon	M. Okimura
DETAILS	L. Goldthwait	M. Okimura
QUANTITIES	P. Nguyen	K. Doll

STATE OF CALIFORNIA DEPARTMENT OF TRANSPORTATION

DIVISION OF ENGINEERING SERVICES STRUCTURE DESIGN DESIGN BRANCH 11

BRIDGE NO. 55E0138 POST MILE 10.7/11.6

RW R488M (RETROFIT-SHEAR PILE WALL)
STRUCTURE DETAILS NO. 3 - SEGMENT C

STRUCTURES DESIGN DETAIL SHEET (ENGLISH) (REV. 09-01-10)

ORIGINAL SCALE IN INCHES FOR REDUCED PLANS 0 1 2 3

UNIT: 3587
PROJECT NUMBER & PHASE: 1212000110
CONTRACT NO.: 0M5501

DISREGARD PRINTS BEARING EARLIER REVISION DATES

REVISION DATES 2/20/12 3/12/12 4/20/12 5-01-12

SHEET 9 OF 26

FILE => rwr488m-p-pile_dt03.dgn

DATE PLOTTED => 16-JUN-2012 TIME PLOTTED => 12:11:5

DIST	COUNTY	ROUTE	POST MILES TOTAL PROJECT	SHEET No.	TOTAL SHEETS
12	Ora	73	10.7/11.6	35	51

REGISTERED CIVIL ENGINEER 6-07-12 DATE

6-11-12
PLANS APPROVAL DATE

REGISTERED PROFESSIONAL ENGINEER YEO HOON YOON No. 73532 Exp. 12/31/12 CIVIL STATE OF CALIFORNIA

The State of California or its officers or agents shall not be responsible for the accuracy or completeness of electronic copies of this plan sheet.

GENERAL NOTES

DESIGN:

AASHTO LRFD Bridge Design Specifications, 4th Edition with California Amendments.

PRESTRESSING STEEL:

Bars - ASTM Designation: A722 Type II (150 ksi)

Strand Tendons-ASTM Designation: A416 (270 Ksi Low Relaxation steel)

FTL = Factored Test Load per anchor (Kips)

fpu = Minimum tensile strength of prestressing steel

As = Minimum cross sectional area of prestressing steel in ground anchor (square inch)

$$As(Min) = \frac{1.0\ FTL}{0.75\ fpu} \quad \text{(Strands)}$$

$$As(Min) = \frac{1.0\ FTL}{0.80\ fpu} \quad \text{(Bars)}$$

NOTES:

(A) Level of initial grouting

(B) Level of secondary grouting

(C) Level of initial grouting inside corrugated sheathing

(D) Bonded length shall be determined by the contractor

(E) For unbonded length, see PROJECT PLANS

(F) For inclination, see PROJECT PLANS

(G) Face of Blockout

NOTES:

1. Anchorage enclosure shall only be used when anchor head assembly is not enclosed in concrete.
2. Anchorage enclosure shall have provisions to allow injecting grout at low end and venting at high end. Galvanize after fabrication.
3. Silicone sealant to cover full width of flange.
4. Steel tube (Min thickness = 1/4") welded to bearing plate. Galvanize assembly after fabrication
5. Steel tube welded to bearing plate. Inside diameter of steel tube (Min thickness = 1/4") to be 1" greater than outside diameter of smooth sheathing.
6. Galvanize assembly after fabrication.
7. For other wall details, see PROJECT PLANS.

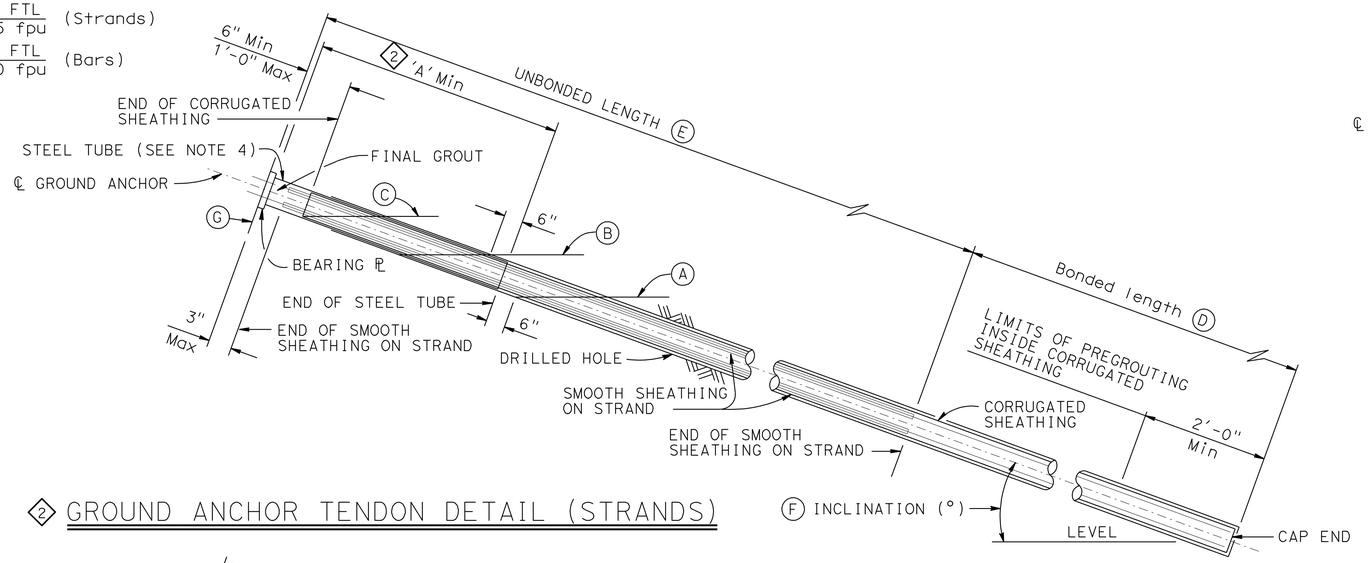

2 GROUND ANCHOR TENDON DETAIL (STRANDS)

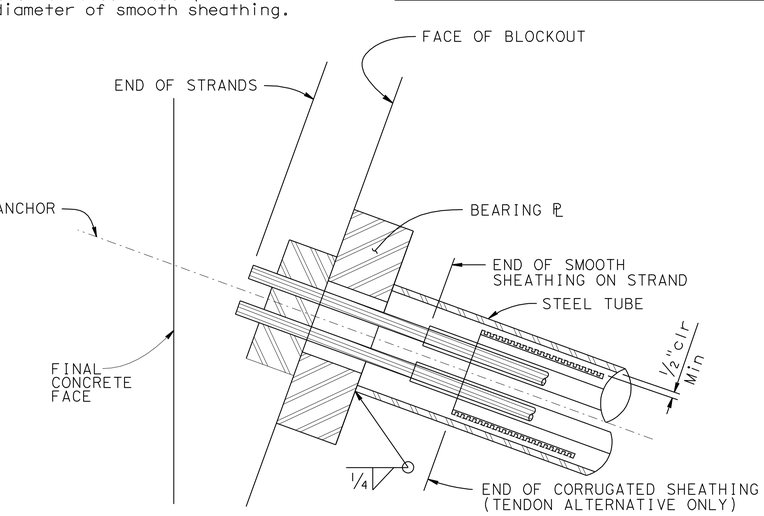

2 ALTERNATIVE X

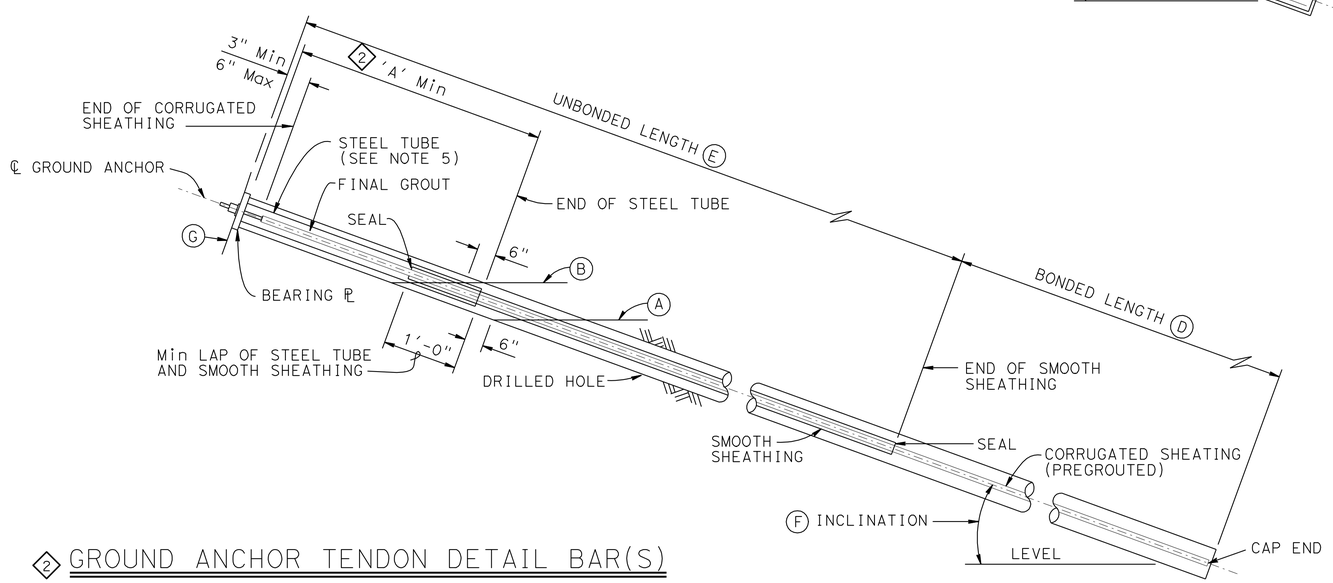

2 GROUND ANCHOR TENDON DETAIL BAR(S)

1 3

LOCATION	ANCHOR INCLINATION	'A'
SEGMENT A	30°	6'-0"
SEGMENT B	30°	6'-0"
SEGMENT B	45°	10'-0"
SEGMENT C	30°	17'-0"
SEGMENT C	35°	10'-6"
SEGMENT C	40°	5'-6"

NO SCALE

REVISED STANDARD DRAWING

FILE NO. xs12-040

APPROVAL DATE July 2011

1 Deleted Detail 3 Added Detail

2 Modified Detail

STATE OF CALIFORNIA DEPARTMENT OF TRANSPORTATION

DIVISION OF ENGINEERING SERVICES

BRIDGE NO. 55E0138

POST MILE 10.7/11.6

SPECIAL DETAILS

RW R488M (RETROFIT-SHEAR PILE WALL)

SUB HORIZONTAL GROUND ANCHOR DETAILS

DS OSD 2147A (ENGLISH STANDARD DRAWING "XS" BORDER REV. (02-02-11)

ORIGINAL SCALE IN INCHES FOR REDUCED PLANS 0 1 2 3

UNIT: 3587
PROJECT NUMBER & PHASE: 1212000110

CONTRACT NO.: OM5501

DISREGARD PRINTS BEARING EARLIER REVISION DATES

REVISION DATES 1-27-12 3-09-12 4-23-12

SHEET 10 OF 26

FILE => rwr488m-r-anch_dt.dgn

USERNAME => s124496 DATE PLOTTED => 16-JUN-2012 TIME PLOTTED => 12:16

DIST	COUNTY	ROUTE	POST MILES TOTAL PROJECT	SHEET No.	TOTAL SHEETS
12	Ora	73	10.7/11.6	36	51

REGISTERED CIVIL ENGINEER 6-07-12 DATE

6-11-12
PLANS APPROVAL DATE

REGISTERED PROFESSIONAL ENGINEER YEO HOON YOON No. 73532 Exp. 12/31/12 CIVIL STATE OF CALIFORNIA

The State of California or its officers or agents shall not be responsible for the accuracy or completeness of electronic copies of this plan sheet.

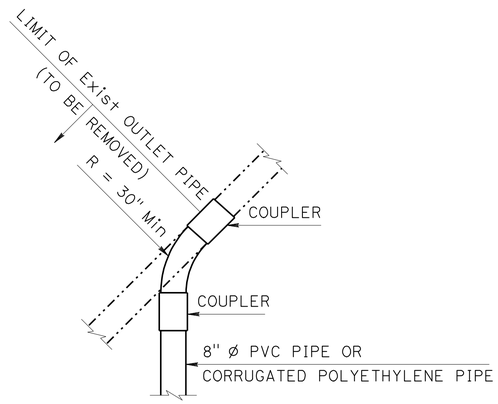

PLAN
NO SCALE

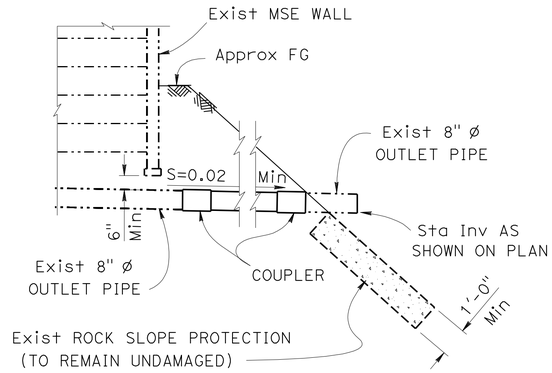

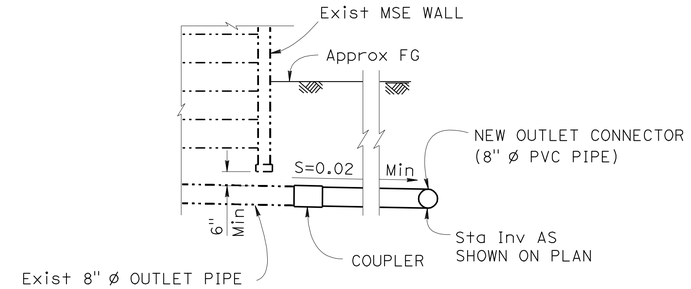

ELEVATION
NO SCALE

OUTLET PIPE CONNECTION DETAIL

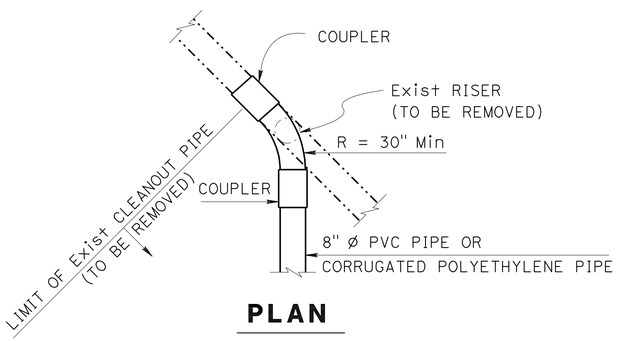

PLAN
NO SCALE

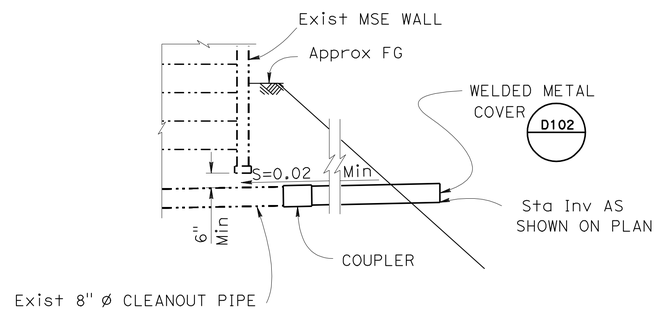

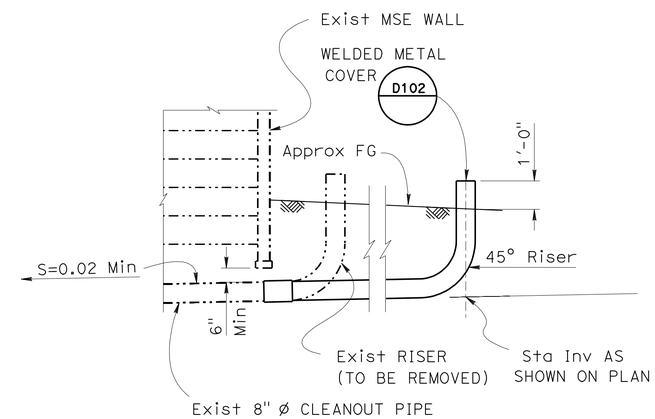

ELEVATION
NO SCALE

CLEANOUT PIPE CONNECTION DETAIL

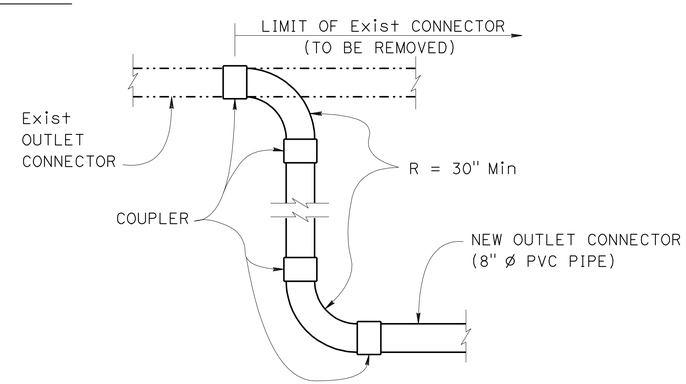

OUTLET CONNECTOR DETAIL - PLAN

NO SCALE

NOTE

Contractor shall adjust, if necessary, new outlet and cleanout pipe locations not to be in conflict with ground anchors, piles or pile caps.

	BY	CHECKED
DESIGN	Y. Yoon	M. Okimura
DETAILS	L. Goldthwait	M. Okimura
QUANTITIES	P. Nguyen	K. Doll

STATE OF CALIFORNIA
DEPARTMENT OF TRANSPORTATION

DIVISION OF ENGINEERING SERVICES
STRUCTURE DESIGN
DESIGN BRANCH 11

BRIDGE NO. 55E0138
POST MILE 10.7/11.6

RW R488M (RETROFIT-SHEAR PILE WALL)

DRAINAGE DETAILS

STRUCTURES DESIGN DETAIL SHEET (ENGLISH) (REV. 09-01-10)

ORIGINAL SCALE IN INCHES FOR REDUCED PLANS 0 1 2 3

UNIT: 3587
PROJECT NUMBER & PHASE: 1212000110
CONTRACT NO.: OM5501

DISREGARD PRINTS BEARING EARLIER REVISION DATES

REVISION DATES: 2-08-12 2-08-12 3-15-12

SHEET 11 OF 26

FILE => rwr488m-u-drndt02.dgn

USERNAME => s124496 DATE PLOTTED => 16-JUN-2012 TIME PLOTTED => 12:16

DIST	COUNTY	ROUTE	POST MILES TOTAL PROJECT	SHEET No.	TOTAL SHEETS
12	Ora	73	10.7/11.6	37	51

Kristopher Barker 4-13-12
CERTIFIED ENGINEERING GEOLOGIST DATE

6-11-12
PLANS APPROVAL DATE

PROFESSIONAL GEOLOGIST Kristopher Barker No. 2383 Exp. 8-31-13 CERTIFIED ENGINEERING GEOLOGIST STATE OF CALIFORNIA

The State of California or its officers or agents shall not be responsible for the accuracy or completeness of electronic copies of this plan sheet.

This LOTB sheet was prepared in accordance with the Caltrans Soil & Rock Logging, Classification, & Presentation Manual (2010 Edition).
See 2010 Standard Plans A10F and A10G for Soil Legend, and A10H for Rock Legend.

BENCH MARK

"Found 3¾" OCS ALUMINUM BENCHMARK DISK STAMPED "3U-41-70", Set in the Northwesterly Corner of a concrete bridge abutment. Monument is located in the Northwesterly Corner of the intersection of Forbes road and Crown Valley Parkway. 150 ft Westerly of the Centerline of Forbes, 22.6 ft Northerly of the Centerline of Crown Valley Parkway and in the Northerly End of the Westerly Abutment. Monument is set level with the bridge deck."
NAVD88, 264.878 feet, 80.735 meters.
NGVD29, 262.543 feet, 80.23 meters

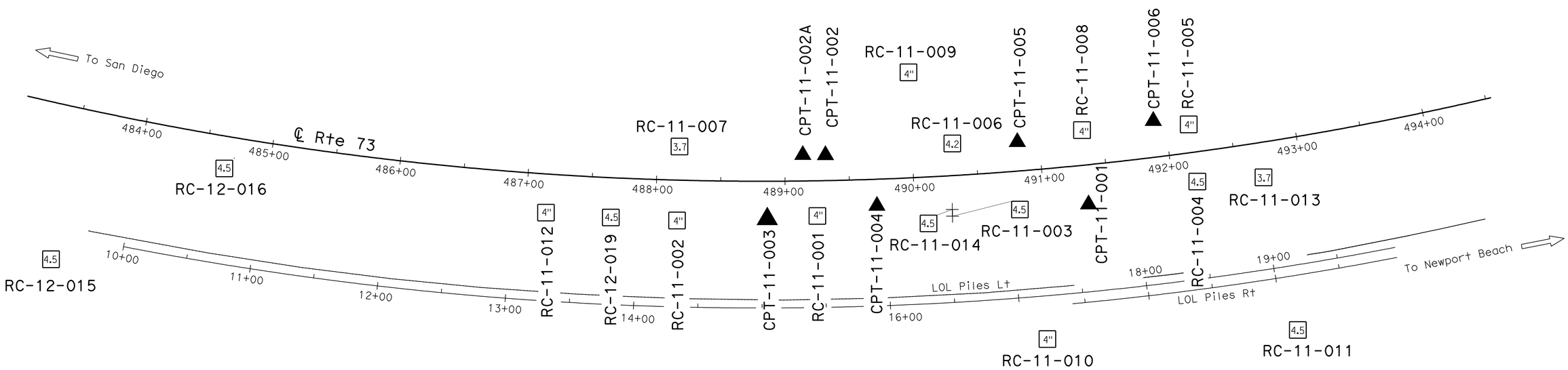

PLAN

1" = 40'

ENGINEERING SERVICES	MATERIALS AND GEOTECHNICAL SERVICES	STATE OF CALIFORNIA DEPARTMENT OF TRANSPORTATION	DIVISION OF ENGINEERING SERVICES STRUCTURE DESIGN DESIGN BRANCH 11	BRIDGE NO. 55E0138 POST MILE 10.7/11.6	RW R488M (RETROFIT-SHEAR PILE WALL) LOG OF TEST BORINGS 1 OF 15
FUNCTIONAL SUPERVISOR NAME: S. Sukiasian	DRAWN BY: F. Nguyen CHECKED BY: C. Harris	FIELD INVESTIGATION BY: K. Barker/J. Pratt/K. Lai/M. Islam			

OGS CIVIL LOG OF TEST BORINGS SHEET

ORIGINAL SCALE IN INCHES FOR REDUCED PLANS 0 1 2 3

UNIT: 3643
PROJECT NUMBER & PHASE: 12120001101 CONTRACT NO.: OM5501

DISREGARD PRINTS BEARING EARLIER REVISION DATES → REVISION DATES ~~03-02-12~~ 04-13-12 ~~04-30-12~~ SHEET 12 OF 26

FILE => rwr488m-z-lotb01.dgn

USERNAME => s124496 DATE PLOTTED => 16-JUN-2012 TIME PLOTTED => 12:16

DIST	COUNTY	ROUTE	POST MILES TOTAL PROJECT	SHEET No.	TOTAL SHEETS
12	Ora	73	10.7/11.6	38	51

Kristopher Barker 4-13-12
CERTIFIED ENGINEERING GEOLOGIST DATE

6-11-12
PLANS APPROVAL DATE

PROFESSIONAL GEOLOGIST Kristopher Barker No. 2383 Exp. 8-31-13 CERTIFIED ENGINEERING GEOLOGIST STATE OF CALIFORNIA

The State of California or its officers or agents shall not be responsible for the accuracy or completeness of electronic copies of this plan sheet.

This LOTB sheet was prepared in accordance with the Caltrans Soil & Rock Logging, Classification, & Presentation Manual (2010 Edition).
See 2010 Standard Plans A10F and A10G for Soil Legend, and A10H for Rock Legend.

FOR PLAN VIEW, SEE
"LOG OF TEST BORINGS 1 OF 15"

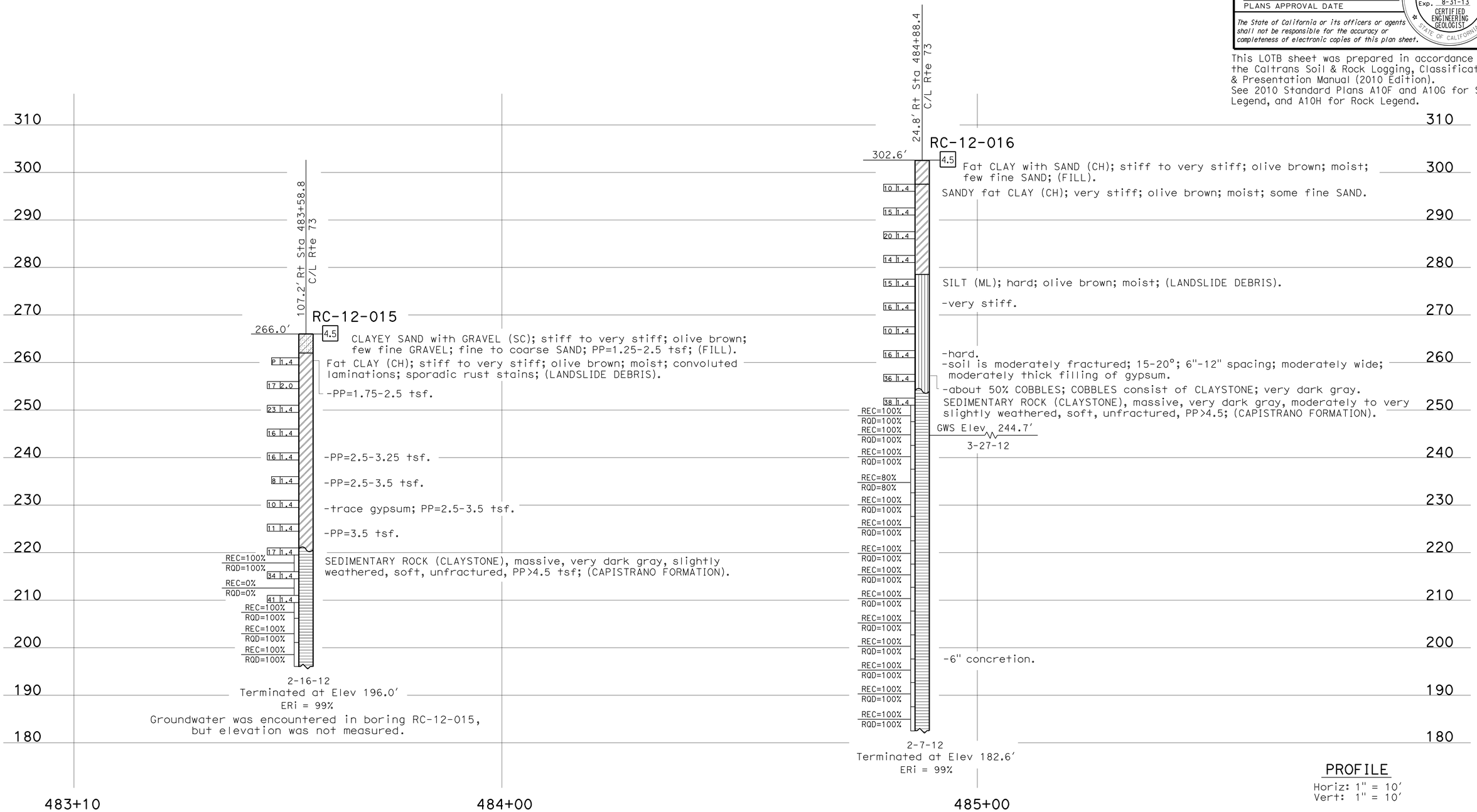

PROFILE
Horiz: 1" = 10'
Vert: 1" = 10'

ENGINEERING SERVICES	MATERIALS AND GEOTECHNICAL SERVICES	STATE OF CALIFORNIA DEPARTMENT OF TRANSPORTATION	DIVISION OF ENGINEERING SERVICES STRUCTURE DESIGN DESIGN BRANCH 11	BRIDGE NO. 55E0138 POST MILE 10.7/11.6	RW R488M (RETROFIT-SHEAR PILE WALL) LOG OF TEST BORINGS 2 OF 15
FUNCTIONAL SUPERVISOR NAME: S. Sukiasian	DRAWN BY: F. Nguyen CHECKED BY: C. Harris	FIELD INVESTIGATION BY: K. Barker			

OGS CIVIL LOG OF TEST BORINGS SHEET

ORIGINAL SCALE IN INCHES FOR REDUCED PLANS 0 1 2 3

UNIT: 3643
PROJECT NUMBER & PHASE: 12120001101 CONTRACT NO.: OM5501

DISREGARD PRINTS BEARING EARLIER REVISION DATES

REVISION DATES: 03-02-12 04-04-12 04-10-12 04-13-12 SHEET 13 OF 26

FILE => rwr488m-z-lotb02.dgn

USERNAME => s124196 DATE PLOTTED => 16-JUN-2012 TIME PLOTTED => 12:16

DIST	COUNTY	ROUTE	POST MILES TOTAL PROJECT	SHEET No.	TOTAL SHEETS
12	Ora	73	10.7/11.6	39	51

Kristopher Barker 4-13-12
CERTIFIED ENGINEERING GEOLOGIST DATE

6-11-12
PLANS APPROVAL DATE

PROFESSIONAL GEOLOGIST Kristopher Barker No. 2383 Exp. 8-31-13 CERTIFIED ENGINEERING GEOLOGIST STATE OF CALIFORNIA

The State of California or its officers or agents shall not be responsible for the accuracy or completeness of electronic copies of this plan sheet.

This LOTB sheet was prepared in accordance with the Caltrans Soil & Rock Logging, Classification, & Presentation Manual (2010 Edition).
See 2010 Standard Plans A10F and A10G for Soil Legend, and A10H for Rock Legend.

FOR PLAN VIEW, SEE
"LOG OF TEST BORINGS 1 OF 15"

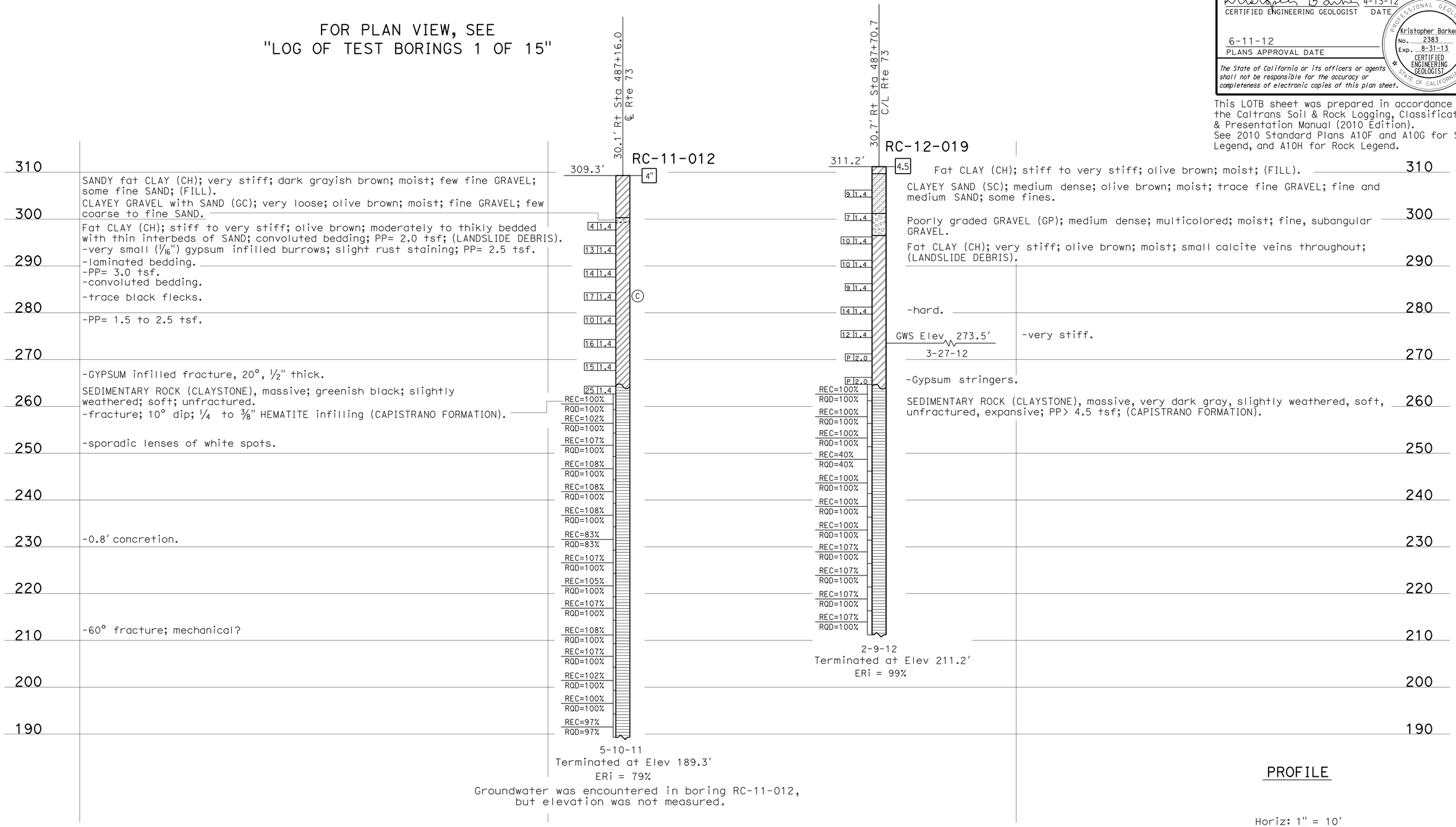

PROFILE

Horiz: 1" = 10'
Vert: 1" = 10'

ENGINEERING SERVICES	MATERIALS AND GEOTECHNICAL SERVICES	STATE OF CALIFORNIA DEPARTMENT OF TRANSPORTATION	DIVISION OF ENGINEERING SERVICES STRUCTURE DESIGN DESIGN BRANCH 11	BRIDGE NO. 55E0138 POST MILE 10.7/11.6	RW R488M (RETROFIT-SHEAR PILE WALL) LOG OF TEST BORINGS 3 OF 15
FUNCTIONAL SUPERVISOR NAME: S. Sukiasian	DRAWN BY: F. Nguyen CHECKED BY: C. Harris	FIELD INVESTIGATION BY: K. Barker			

OGS CIVIL LOG OF TEST BORINGS SHEET

ORIGINAL SCALE IN INCHES FOR REDUCED PLANS 0 1 2 3

UNIT: 3643
PROJECT NUMBER & PHASE: 12120001101 CONTRACT NO.: 0M5501

DISREGARD PRINTS BEARING EARLIER REVISION DATES → 03-02-12 04-13-12 04-16-12

SHEET	OF
14	26

FILE => rwr488m-z-lotb03.dgn

USERNAME => s124496 DATE PLOTTED => 16-JUN-2012 TIME PLOTTED => 12:16

DIST	COUNTY	ROUTE	POST MILES TOTAL PROJECT	SHEET No.	TOTAL SHEETS
12	Ora	73	10.7/11.6	40	51

Kristopher Barker 4-13-12
CERTIFIED ENGINEERING GEOLOGIST DATE

6-11-12
PLANS APPROVAL DATE

PROFESSIONAL GEOLOGIST Kristopher Barker No. 2383 Exp. 8-31-13 CERTIFIED ENGINEERING GEOLOGIST STATE OF CALIFORNIA

The State of California or its officers or agents shall not be responsible for the accuracy or completeness of electronic copies of this plan sheet.

This LOTB sheet was prepared in accordance with the Caltrans Soil & Rock Logging, Classification, & Presentation Manual (2010 Edition).
See 2010 Standard Plans A10F and A10G for Soil Legend, and A10H for Rock Legend.

FOR PLAN VIEW, SEE
"LOG OF TEST BORINGS 1 OF 15"

31.4′ Rt Sta 488+17.0
℄ Rte 73

RC-11-002

312.9′

4" SANDY fat CLAY (CH); very stiff; dark grayish brown; moist; trace fine GRAVEL; some fine to medium SAND.

19 1.4 CLAYEY SAND (SC); medium dense; dark grayish brown.
-PP= 2.25 tsf.

10 1.4 SANDY fat CLAY (CH); very stiff; dark grayish brown; moist.

CLAYEY SAND (SC); medium dense; dark grayish brown; moist; trace fine GRAVEL; some fine to medium SAND.
SANDY fat CLAY (CH)

10 1.4 Fat CLAY (CH); stiff to very stiff; olive brown; rust stained; PP= 1.5 to 3.0 tsf; (LANDSLIDE DEBRIS).

P 2.0 -PP= 3.0 tsf.

13 1.4 -PP= 2.0 tsf.

P 2.0 -1 to 2" lenses of GYPSUM crystals.
-more thin lenses of GYPSUM.

13 1.4 -no gypsum.

P 2.0

REC=100% RQD=100% SEDIMENTARY ROCK (MUDSTONE), massively bedded; greenish black; moderately weathered; moderately soft; some rust staining.

28 1.4 -no rust stains; slightly weathered.

REC=100% RQD=100%
REC=105% RQD=100% -expansive.
REC=112% RQD=100%
REC=103% RQD=100% -lost circulation.
REC=100% RQD=100%
REC=100% RQD=100%
REC=105% RQD=94% -thin fine GRAVEL lens (harder MUDSTONE).
REC=112% RQD=100%
REC=105% RQD=100%
REC=100% RQD=100%
REC=78% RQD=78%
REC=100% RQD=100%
REC=100% RQD=100%
REC=100% RQD=100%

3-23-11
Terminated at Elev 192.9′
ERi = 79%
Groundwater was encountered in boring RC-11-002, but elevation was not measured.

310 300 290 280 270 260 250 240 230 220 210 200 190

488+00 489+00 490+00

PROFILE
Horiz: 1" = 10′
Vert: 1" = 10′

ENGINEERING SERVICES	MATERIALS AND GEOTECHNICAL SERVICES	STATE OF CALIFORNIA DEPARTMENT OF TRANSPORTATION	DIVISION OF ENGINEERING SERVICES STRUCTURE DESIGN DESIGN BRANCH 11	BRIDGE NO. 55E0138 POST MILE 10.7/11.6	RW R488M (RETROFIT-SHEAR PILE WALL) LOG OF TEST BORINGS 4 OF 15
FUNCTIONAL SUPERVISOR NAME: S. Sukiasian	DRAWN BY: F. Nguyen CHECKED BY: C. Harris	FIELD INVESTIGATION BY: K. Barker			

OGS CIVIL LOG OF TEST BORINGS SHEET

ORIGINAL SCALE IN INCHES FOR REDUCED PLANS 0 1 2 3

UNIT: 3643
PROJECT NUMBER & PHASE: 12120001101 CONTRACT NO.: 0M5501

DISREGARD PRINTS BEARING EARLIER REVISION DATES → REVISION DATES 03-02-12 04-13-12 04-30-12 SHEET 15 OF 26

FILE => rwr488m-z-lotb04.dgn

USERNAME => s124496 DATE PLOTTED => 16-JUN-2012 TIME PLOTTED => 12:16

DIST	COUNTY	ROUTE	POST MILES TOTAL PROJECT	SHEET No.	TOTAL SHEETS
12	Ora	73	10.7/11.6	41	51

Kristopher Barker 4-13-12
CERTIFIED ENGINEERING GEOLOGIST DATE

6-11-12
PLANS APPROVAL DATE

PROFESSIONAL GEOLOGIST Kristopher Barker No. 2383 Exp. 8-31-13 CERTIFIED ENGINEERING GEOLOGIST STATE OF CALIFORNIA

The State of California or its officers or agents shall not be responsible for the accuracy or completeness of electronic copies of this plan sheet.

This LOTB sheet was prepared in accordance with the Caltrans Soil & Rock Logging, Classification, & Presentation Manual (2010 Edition).
See 2010 Standard Plans A10F and A10G for Soil Legend, and A10H for Rock Legend.

FOR PLAN VIEW, SEE
"LOG OF TEST BORINGS 1 OF 15"

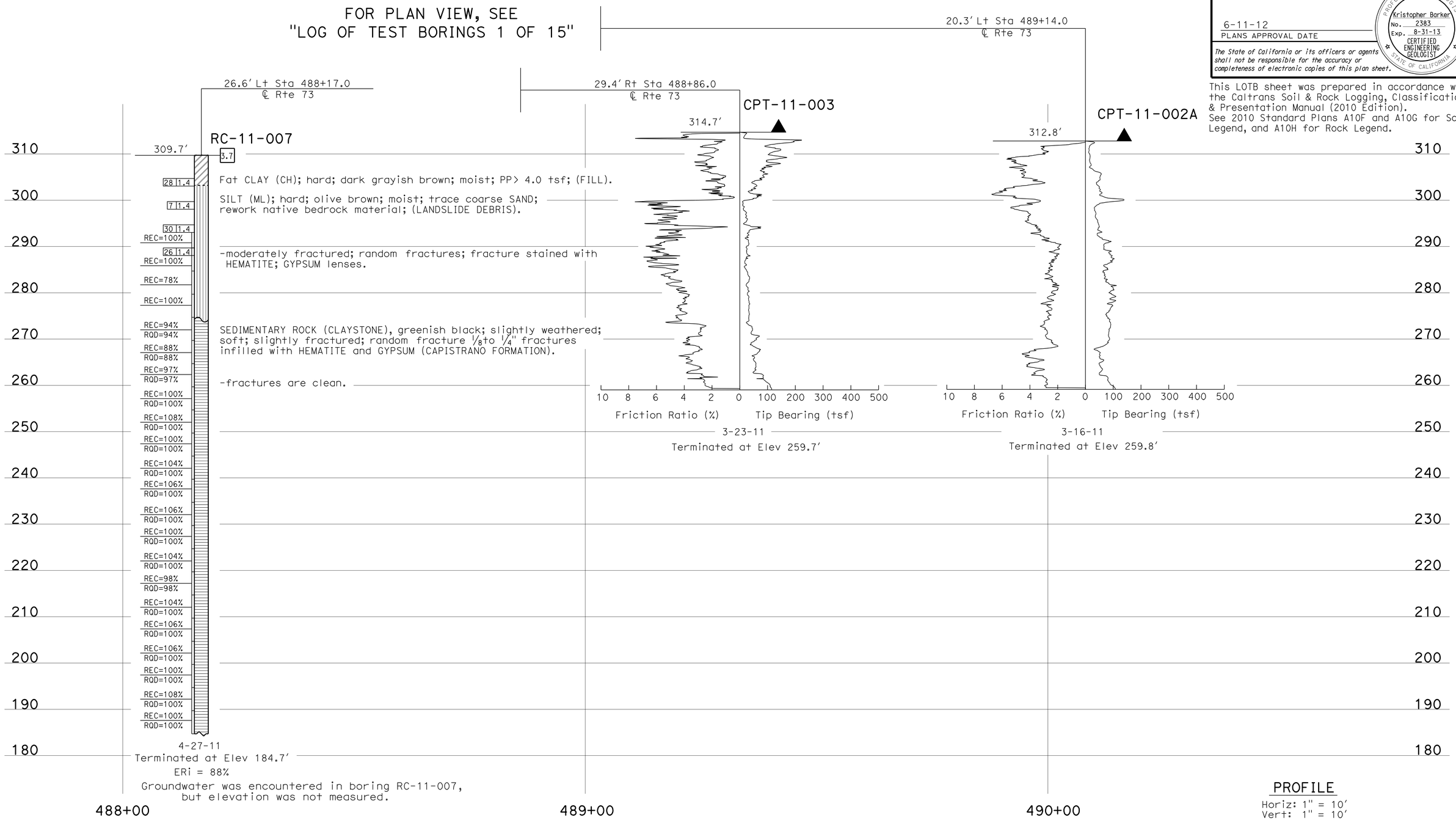

PROFILE
Horiz: 1" = 10′
Vert: 1" = 10′

ENGINEERING SERVICES	MATERIALS AND GEOTECHNICAL SERVICES	STATE OF CALIFORNIA DEPARTMENT OF TRANSPORTATION	DIVISION OF ENGINEERING SERVICES STRUCTURE DESIGN DESIGN BRANCH 11	BRIDGE NO. 55E0138 POST MILE 10.7/11.6	RW R488M (RETROFIT-SHEAR PILE WALL) LOG OF TEST BORINGS 5 OF 15
FUNCTIONAL SUPERVISOR NAME: S. Sukiasian	DRAWN BY: F. Nguyen CHECKED BY: C. Harris	FIELD INVESTIGATION BY: K. Barker			

OGS CIVIL LOG OF TEST BORINGS SHEET

ORIGINAL SCALE IN INCHES FOR REDUCED PLANS 0 1 2 3

UNIT: 3643
PROJECT NUMBER & PHASE: 12120001101 CONTRACT NO.: 0M5501

DISREGARD PRINTS BEARING EARLIER REVISION DATES

REVISION DATES: 03-02-12 04-13-12 04-30-12

SHEET 16 OF 26

FILE => rwr488m-z-lotb05.dgn

USERNAME => s124496 DATE PLOTTED => 16-JUN-2012 TIME PLOTTED => 12:16

DIST	COUNTY	ROUTE	POST MILES TOTAL PROJECT	SHEET No.	TOTAL SHEETS
12	Ora	73	10.7/11.6	42	51

Kristopher Barker 4-13-12
CERTIFIED ENGINEERING GEOLOGIST DATE

6-11-12
PLANS APPROVAL DATE

PROFESSIONAL GEOLOGIST Kristopher Barker No. 2383 Exp. 8-31-13 CERTIFIED ENGINEERING GEOLOGIST STATE OF CALIFORNIA

The State of California or its officers or agents shall not be responsible for the accuracy or completeness of electronic copies of this plan sheet.

This LOTB sheet was prepared in accordance with the Caltrans Soil & Rock Logging, Classification, & Presentation Manual (2010 Edition).
See 2010 Standard Plans A10F and A10G for Soil Legend, and A10H for Rock Legend.

FOR PLAN VIEW, SEE
"LOG OF TEST BORINGS 1 OF 15"

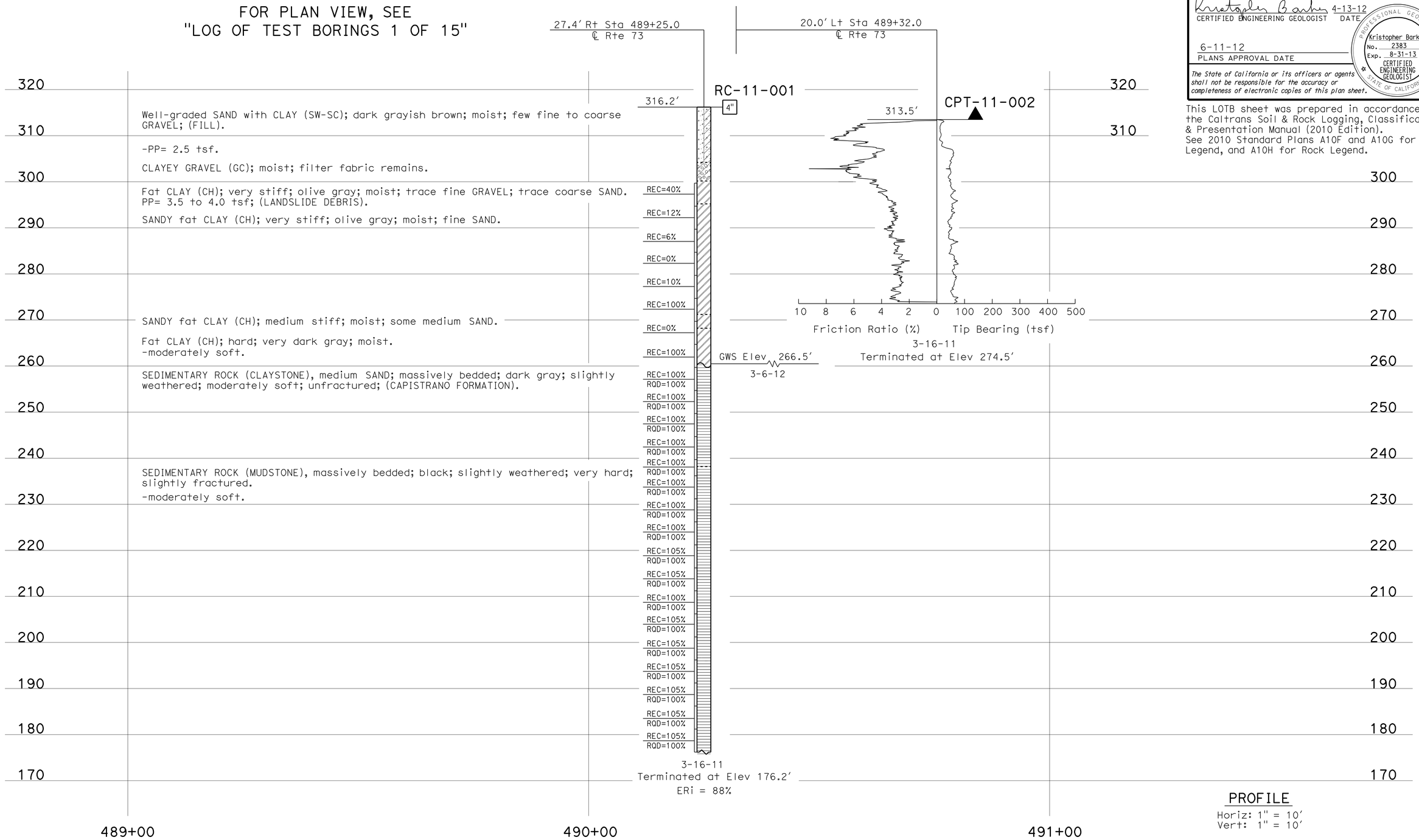

PROFILE
Horiz: 1" = 10'
Vert: 1" = 10'

ENGINEERING SERVICES	MATERIALS AND GEOTECHNICAL SERVICES	STATE OF CALIFORNIA DEPARTMENT OF TRANSPORTATION	DIVISION OF ENGINEERING SERVICES STRUCTURE DESIGN DESIGN BRANCH 11	BRIDGE NO. 55E0138 POST MILE 10.7/11.6	RW R488M (RETROFIT-SHEAR PILE WALL) LOG OF TEST BORINGS 6 OF 15
FUNCTIONAL SUPERVISOR NAME: S. Sukiasian	DRAWN BY: F. Nguyen CHECKED BY: C. Harris	FIELD INVESTIGATION BY: K. Barker			

OGS CIVIL LOG OF TEST BORINGS SHEET

ORIGINAL SCALE IN INCHES FOR REDUCED PLANS 0 1 2 3

UNIT: 3643
PROJECT NUMBER & PHASE: 12120001101 CONTRACT NO.: 0M5501

DISREGARD PRINTS BEARING EARLIER REVISION DATES

REVISION DATES: 03-02-12 04-13-12 04-30-12 SHEET 17 OF 26

FILE => rwr488m-z-lotb06.dgn

USERNAME => s124096 DATE PLOTTED => 16-JUN-2012 TIME PLOTTED => 12:16

DIST	COUNTY	ROUTE	POST MILES TOTAL PROJECT	SHEET No.	TOTAL SHEETS
12	Ora	73	10.7/11.6	43	51

Kristopher Barker 4-13-12
CERTIFIED ENGINEERING GEOLOGIST DATE

6-11-12
PLANS APPROVAL DATE

PROFESSIONAL GEOLOGIST Kristopher Barker No. 2383 Exp. 8-31-13 CERTIFIED ENGINEERING GEOLOGIST STATE OF CALIFORNIA

The State of California or its officers or agents shall not be responsible for the accuracy or completeness of electronic copies of this plan sheet.

This LOTB sheet was prepared in accordance with the Caltrans Soil & Rock Logging, Classification, & Presentation Manual (2010 Edition).
See 2010 Standard Plans A10F and A10G for Soil Legend, and A10H for Rock Legend.

FOR PLAN VIEW, SEE
"LOG OF TEST BORINGS 1 OF 15"

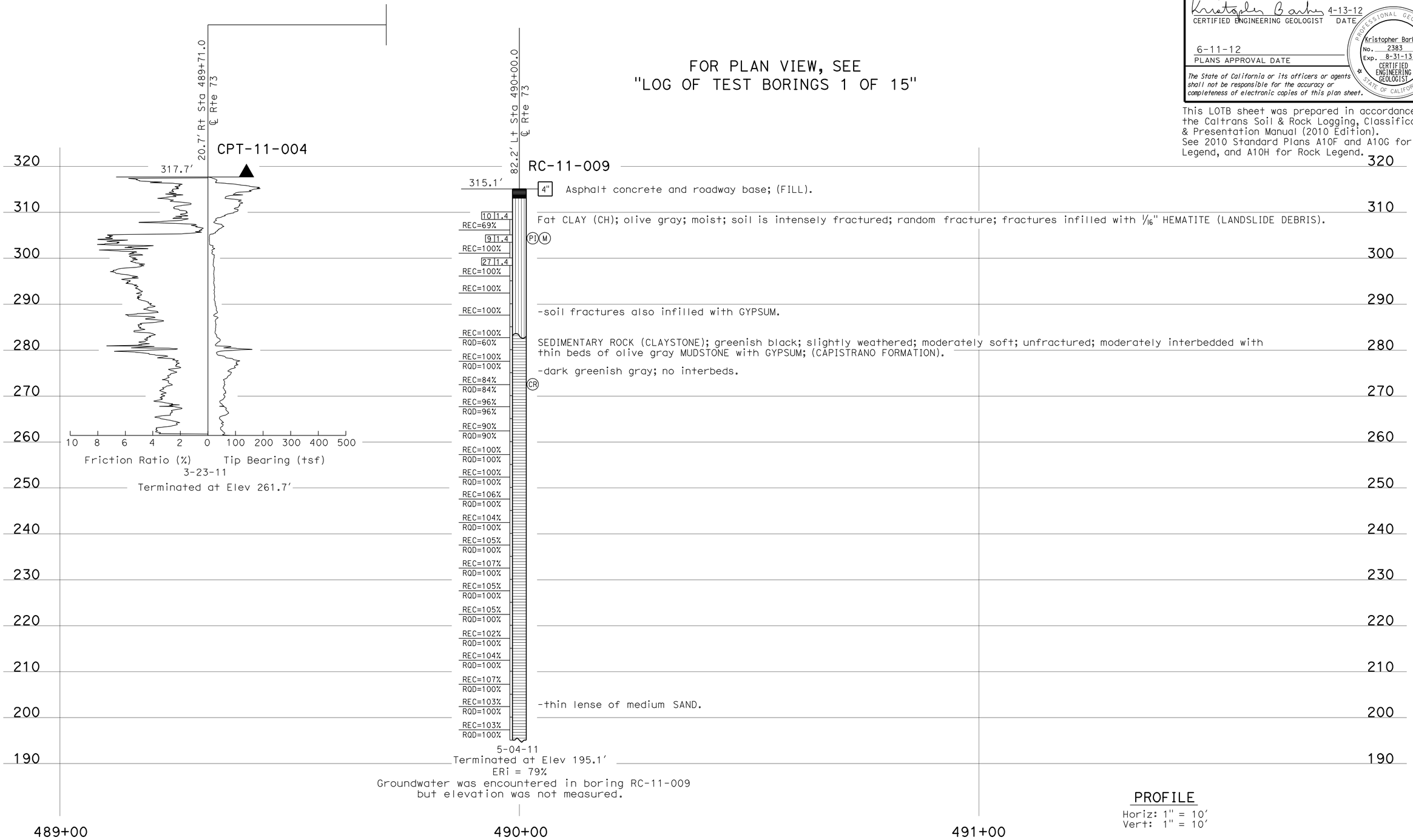

ENGINEERING SERVICES	MATERIALS AND GEOTECHNICAL SERVICES	STATE OF CALIFORNIA DEPARTMENT OF TRANSPORTATION	DIVISION OF ENGINEERING SERVICES STRUCTURE DESIGN DESIGN BRANCH 11	BRIDGE NO. 55E0138 POST MILE 10.7/11.6	RW R488M (RETROFIT-SHEAR PILE WALL) LOG OF TEST BORINGS 7 OF 15
FUNCTIONAL SUPERVISOR NAME: S. Sukiasian	DRAWN BY: F. Nguyen CHECKED BY: C. Harris	FIELD INVESTIGATION BY: K. Barker			

OGS CIVIL LOG OF TEST BORINGS SHEET

ORIGINAL SCALE IN INCHES FOR REDUCED PLANS 0 1 2 3

UNIT: 3643
PROJECT NUMBER & PHASE: 12120001101 CONTRACT NO.: 0M5501

DISREGARD PRINTS BEARING EARLIER REVISION DATES → REVISION DATES 03-06-12 04-13-12 04-30-12 SHEET 18 OF 26

FILE => rwr488m-z-lotb07.dgn

USERNAME => s124496 DATE PLOTTED => 16-JUN-2012 TIME PLOTTED => 12:16

DIST	COUNTY	ROUTE	POST MILES TOTAL PROJECT	SHEET No.	TOTAL SHEETS
12	Ora	73	10.7/11.6	44	51

Joseph S. Pratt 4-13-12
CERTIFIED ENGINEERING GEOLOGIST DATE

6-11-12
PLANS APPROVAL DATE

PROFESSIONAL GEOLOGIST Joseph S. Pratt No. 2141 Exp. 5-31-13 CERTIFIED ENGINEERING GEOLOGIST STATE OF CALIFORNIA

The State of California or its officers or agents shall not be responsible for the accuracy or completeness of electronic copies of this plan sheet.

This LOTB sheet was prepared in accordance with the Caltrans Soil & Rock Logging, Classification, & Presentation Manual (2010 Edition).
See 2010 Standard Plans A10F and A10G for Soil Legend, and A10H for Rock Legend.

FOR PLAN VIEW, SEE
"LOG OF TEST BORINGS 1 OF 15"

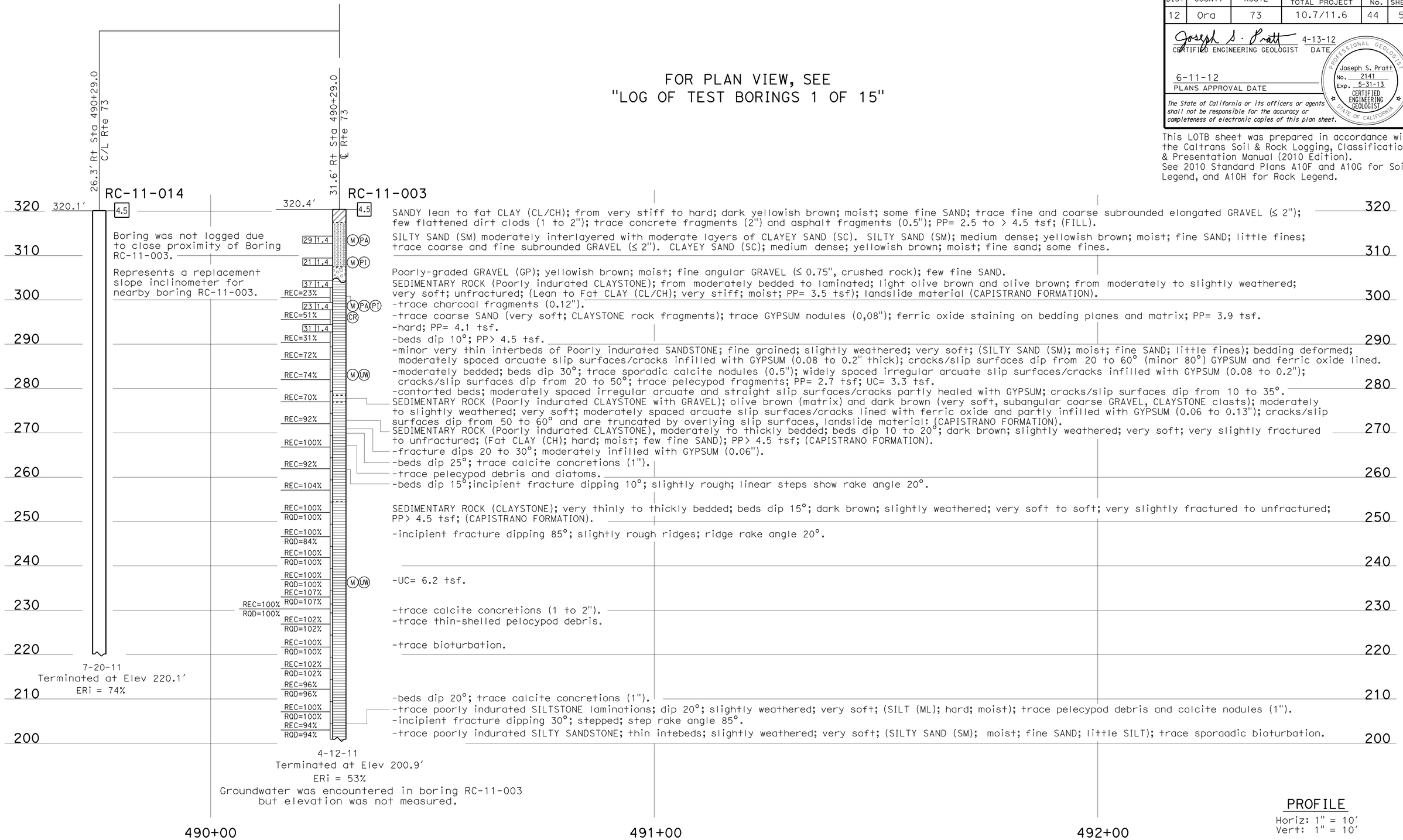

PROFILE
Horiz: 1" = 10'
Vert: 1" = 10'

ENGINEERING SERVICES	MATERIALS AND GEOTECHNICAL SERVICES	STATE OF CALIFORNIA DEPARTMENT OF TRANSPORTATION	DIVISION OF ENGINEERING SERVICES STRUCTURE DESIGN DESIGN BRANCH 11	BRIDGE NO. 55E0138 POST MILE 10.7/11.6	RW R488M (RETROFIT-SHEAR PILE WALL)
FUNCTIONAL SUPERVISOR NAME: S. Sukiasian	DRAWN BY: F. Nguyen CHECKED BY: C. Harris	FIELD INVESTIGATION BY: J. Pratt/ M. Islam			LOG OF TEST BORINGS 8 OF 15

OGS CIVIL LOG OF TEST BORINGS SHEET

ORIGINAL SCALE IN INCHES FOR REDUCED PLANS 0 1 2 3

UNIT: 3643
PROJECT NUMBER & PHASE: 12120001101 CONTRACT NO.: 0M5501

DISREGARD PRINTS BEARING EARLIER REVISION DATES → 03-05-12 04-05-12 04-10-12 04-13-12

SHEET 19 OF 26

FILE => rwr488m-z-lotb08.dgn

USERNAME => s124436 DATE PLOTTED => 16-JUN-2012 TIME PLOTTED => 12:16

DIST	COUNTY	ROUTE	POST MILES TOTAL PROJECT	SHEET No.	TOTAL SHEETS
12	Ora	73	10.7/11.6	45	51

Joseph S. Pratt 4-13-12
CERTIFIED ENGINEERING GEOLOGIST DATE

6-11-12
PLANS APPROVAL DATE

PROFESSIONAL GEOLOGIST Joseph S. Pratt No. 2141 Exp. 5-31-13 CERTIFIED ENGINEERING GEOLOGIST STATE OF CALIFORNIA

The State of California or its officers or agents shall not be responsible for the accuracy or completeness of electronic copies of this plan sheet.

This LOTB sheet was prepared in accordance with the Caltrans Soil & Rock Logging, Classification, & Presentation Manual (2010 Edition).
See 2010 Standard Plans A10F and A10G for Soil Legend, and A10H for Rock Legend.

FOR PLAN VIEW, SEE
"LOG OF TEST BORINGS 1 OF 15"

25.0' Lt Sta 490+32.0
℄ Rte 73

RC-11-006

318.0'

4.2 Lean to Fat CLAY with SAND (CL/CH) moderately interlayered with moderate layers of CLAYEY SAND (SC). Lean to Fat CLAY with SAND (CL/CH); hard; olive brown and dark brown; moist; little fine SAND; few fine subrounded claystone and siltstone GRAVEL, soft; PP> 4.5 tsf. CLAYEY SAND (SC); medium dense, light olive brown; moist; fine sand; little fines; (FILL).

24 1.4 -very stiff; PP= 2.0 tsf.

15 1.4 REC=29% SEDIMENTARY ROCK (Poorly indurated CLAYSTONE), thinly to moderately bedded; beds dip from 15 to 30°; light olive brown, olive brown, and olive; moderately to slightly weathered; very soft; from slightly to very slightly fractured; trace sporadic GYPSUM filaments and concretions (Lean to fat CLAY (CL/CH); hard; moist; few fine SAND; PP> 4.5 tsf); landslide material (CAPISTRANO FORMATION).

14 1.4 REC=77% -slightly fractured; fractures dip 70°; unhealed; ferric oxide lined; lost water to formation.

43 2.0 REC=110% CU M UW -irregular fractures dip from 70 to 80°; fractures infilled with GYPSUM (0.2 to 0.32"); bedding and fractures lined with ferric oxide; lost water to formation.

REC=68%

REC=106% -continuous fracture dips 70°; fractures infilled with GYPSUM (0.1"); lost water to formation.

REC=100% -incipient fractures dip from 70 to 80°; ferric oxide lined zone 1.5' thick; lost water to formation.
-light olive brown and strong brown; beds dip from 20 to 30°; bedding planes coated with GYPSUM; zone 1' thick.

REC=92% -very stiff; PP= 3.9 tsf.

REC=104% SEDIMENTARY ROCK (Poorly indurated CLAYSTONE), thinly to moderately bedded; beds dip from 15 to 25°; dark brown and olive brown mottled;; moderately to slightly weathered; very soft moderately to widely spaced irregular and straight slip surfaces/cracks infilled with GYPSUM (0.06 to 0.13"); cracks/slip surfaces dip 40 and 80°; (Fat CLAY (CH); very stiff; moist; few fine SAND; PP= 3.8 tsf); landslide material (CAPISTRANO FORMATION).

REC=100% SEDIMENTARY ROCK (Poorly indurated CLAYSTONE); from laminated to thickly bedded; beds dip from 15 to 20°; very dark grayish brown and strong brown mottled; moderately to slightly weathered; very soft; slightly fractured; (Fat CLAY (CH); hard; moist; few fine SAND; PP> 4.5 tsf); (CAPISTRANO FORMATION).

REC=100% M UW -incipient fracture dips 50°; slightly rough surfaces with slickensides; rake angle 80°; zone 0.3' thick.
-trace GYPSUM laminations (0.2" thick); unfractured; UC= 2.1 tsf.

REC=100% RQD=100% SEDIMENTARY ROCK (CLAYSTONE); from laminated to thickly bedded; beds dip from 10 to 20°; very dark grayish brown; moderately to slightly weathered; very soft to soft; very slightly fractured to unfractured; PP> 4.5 tsf; (CAPISTRANO FORMATION).

REC=100% RQD=86% -incipient fractures dip from 75 to 80°; very closely spaced; zone 0.7' thick.

REC=102% RQD=102% -trace interlaminated SILTSTONE (0.13"); soft; zone 3' thick; unfractured.

REC=90% RQD=90% -trace GASTROPOD debris and possible DIATOMS

REC=102% RQD=102% -few thin interbeds of CLAYEY SILTSTONE (3"); very soft; unfractured; trace GASTROPOD and DIATOMS

REC=100% RQD=100%

REC=102% RQD=102%

REC=100% RQD=100% -slightly fractured.

REC=66% RQD=66% -incipient fracture dips 60°; not healed; zone 0.4' thick.

REC=90% RQD=84% -incipient fracture dips 30°; not healed; zone 0.2' thick.

REC=86% RQD=86% -unfractured; very dark grayish brown and dark olive gray.

REC=100% RQD=100%

4-21-11
Terminated at Elev 198.0'
ERi = 73%
Groundwater was encountered in boring RC-11-006, but elevation was not measured.

320 310 300 290 280 270 260 250 240 230 220 210 200

490+00 491+00 492+00

PROFILE
Horiz: 1" = 10'
Vert: 1" = 10'

ENGINEERING SERVICES	MATERIALS AND GEOTECHNICAL SERVICES	STATE OF CALIFORNIA DEPARTMENT OF TRANSPORTATION	DIVISION OF ENGINEERING SERVICES STRUCTURE DESIGN DESIGN BRANCH 11	BRIDGE NO. 55E0138 POST MILE 10.7/11.6	RW R488M (RETROFIT-SHEAR PILE WALL) LOG OF TEST BORINGS 9 OF 15
FUNCTIONAL SUPERVISOR NAME: S. Sukiasian	DRAWN BY: F. Nguyen CHECKED BY: C. Harris	FIELD INVESTIGATION BY: J. Pratt			

OGS CIVIL LOG OF TEST BORINGS SHEET

ORIGINAL SCALE IN INCHES FOR REDUCED PLANS 0 1 2 3

UNIT: 3643
PROJECT NUMBER & PHASE: 12120001101 CONTRACT NO.: 0M5501

DISREGARD PRINTS BEARING EARLIER REVISION DATES → REVISION DATES 03-02-12 04-06-12 04-10-12 04-13-12 SHEET 20 OF 26

FILE => rwr488m-z-lotb09.dgn

USERNAME => s124436 DATE PLOTTED => 16-JUN-2012 TIME PLOTTED => 12:16

DIST	COUNTY	ROUTE	POST MILES TOTAL PROJECT	SHEET No.	TOTAL SHEETS
12	Ora	73	10.7/11.6	46	51

Joseph S. Pratt 4-13-12
CERTIFIED ENGINEERING GEOLOGIST DATE

PROFESSIONAL GEOLOGIST Joseph S. Pratt No. 2141 Exp. 5-31-13 CERTIFIED ENGINEERING GEOLOGIST STATE OF CALIFORNIA

6-11-12
PLANS APPROVAL DATE

The State of California or its officers or agents shall not be responsible for the accuracy or completeness of electronic copies of this plan sheet.

This LOTB sheet was prepared in accordance with the Caltrans Soil & Rock Logging, Classification, & Presentation Manual (2010 Edition).
See 2010 Standard Plans A10F and A10G for Soil Legend, and A10H for Rock Legend.

FOR PLAN VIEW, SEE
"LOG OF TEST BORINGS 1 OF 15"

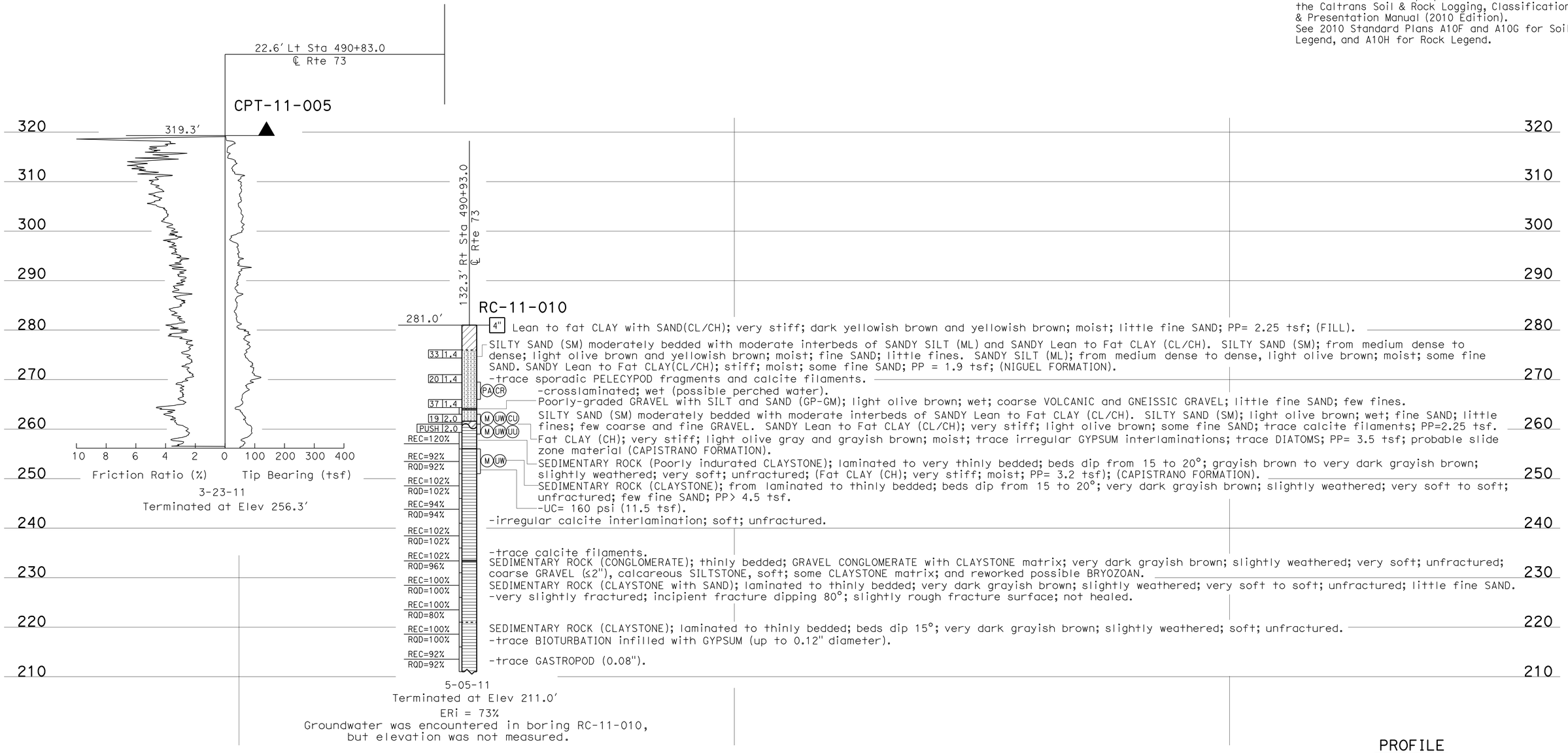

PROFILE
Horiz: 1" = 20'
Vert: 1" = 10'

ENGINEERING SERVICES	MATERIALS AND GEOTECHNICAL SERVICES	STATE OF CALIFORNIA DEPARTMENT OF TRANSPORTATION	DIVISION OF ENGINEERING SERVICES STRUCTURE DESIGN DESIGN BRANCH 11	BRIDGE NO. 55E0138 POST MILE 10.7/11.6	RW R488M (RETROFIT-SHEAR PILE WALL) LOG OF TEST BORINGS 10 OF 15
FUNCTIONAL SUPERVISOR NAME: S. Sukiasian	DRAWN BY: F. Nguyen CHECKED BY: C. Harris	FIELD INVESTIGATION BY: K. Barker/J. Pratt/K. Lai			

OGS CIVIL LOG OF TEST BORINGS SHEET

ORIGINAL SCALE IN INCHES FOR REDUCED PLANS 0 1 2 3

UNIT: 3643
PROJECT NUMBER & PHASE: 12120001101 CONTRACT NO.: 0M5501

DISREGARD PRINTS BEARING EARLIER REVISION DATES

REVISION DATES: 03-02-12 04-06-12 04-10-12 04-13-12 | SHEET 21 | OF 26

FILE => rwr488m-z-lotb10.dgn

USERNAME => s124496 DATE PLOTTED => 16-JUN-2012 TIME PLOTTED => 12:17

DIST	COUNTY	ROUTE	POST MILES TOTAL PROJECT	SHEET No.	TOTAL SHEETS
12	Ora	73	10.7/11.6	47	51

Kristopher Barker 4-13-12
CERTIFIED ENGINEERING GEOLOGIST DATE

6-11-12
PLANS APPROVAL DATE

PROFESSIONAL GEOLOGIST Kristopher Barker No. 2383 Exp. 8-31-13 CERTIFIED ENGINEERING GEOLOGIST STATE OF CALIFORNIA

The State of California or its officers or agents shall not be responsible for the accuracy or completeness of electronic copies of this plan sheet.

This LOTB sheet was prepared in accordance with the Caltrans Soil & Rock Logging, Classification, & Presentation Manual (2010 Edition).
See 2010 Standard Plans A10F and A10G for Soil Legend, and A10H for Rock Legend.

FOR PLAN VIEW, SEE
"LOG OF TEST BORINGS 1 OF 15"

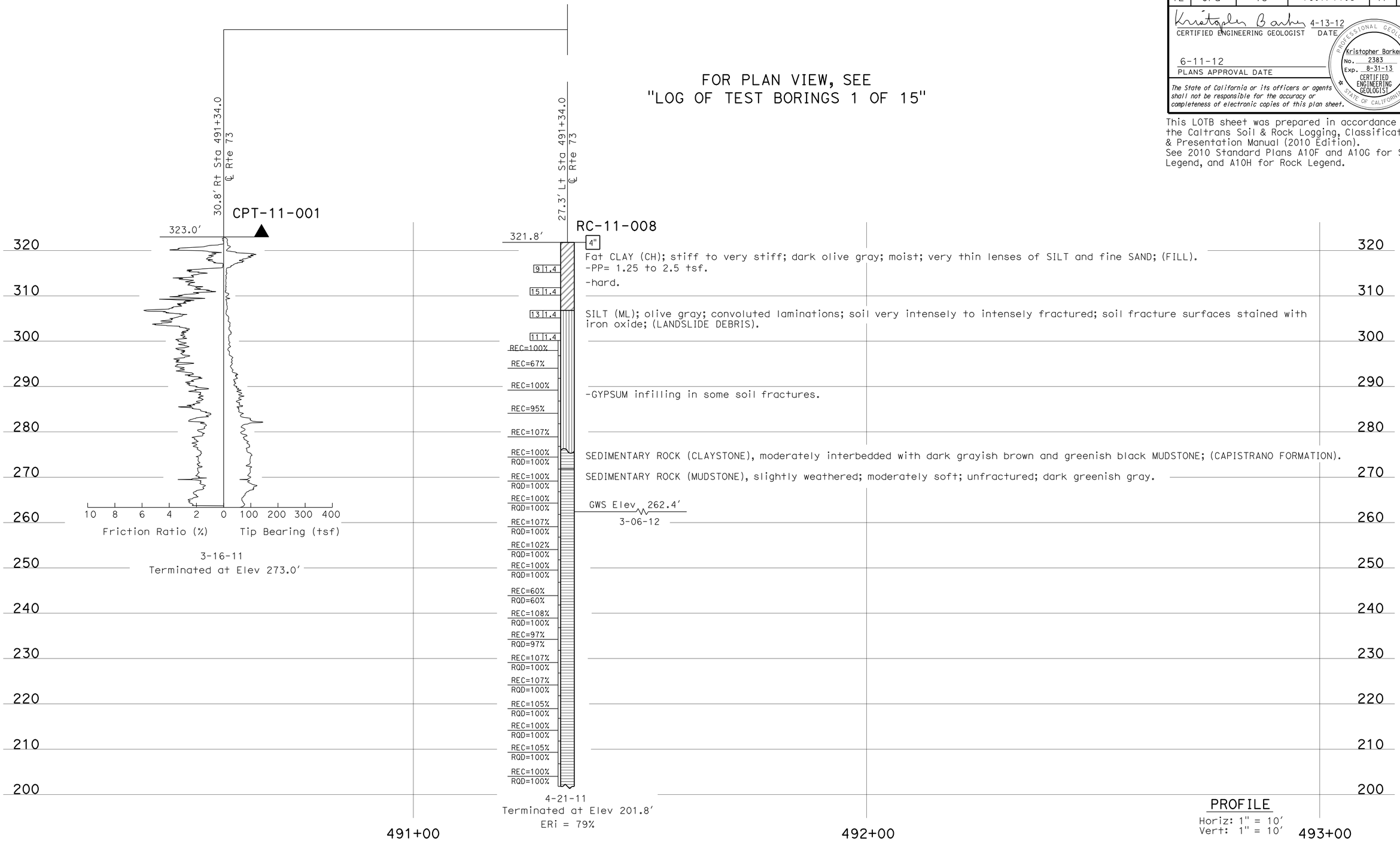

ENGINEERING SERVICES	MATERIALS AND GEOTECHNICAL SERVICES	STATE OF CALIFORNIA DEPARTMENT OF TRANSPORTATION	DIVISION OF ENGINEERING SERVICES STRUCTURE DESIGN DESIGN BRANCH 11	BRIDGE NO. 55E0138 POST MILE 10.7/11.6	RW R488M (RETROFIT-SHEAR PILE WALL) LOG OF TEST BORINGS 11 OF 15
FUNCTIONAL SUPERVISOR NAME: S. Sukiasian	DRAWN BY: F. Nguyen CHECKED BY: C. Harris	FIELD INVESTIGATION BY: K. Barker			

OGS CIVIL LOG OF TEST BORINGS SHEET

ORIGINAL SCALE IN INCHES FOR REDUCED PLANS 0 1 2 3

UNIT: 3643
PROJECT NUMBER & PHASE: 12120001101 CONTRACT NO.: 0M5501

DISREGARD PRINTS BEARING EARLIER REVISION DATES

REVISION DATES: ~~03-02-12~~ 04-13-12 ~~04-30-12~~ SHEET 22 OF 26

FILE => rwr488m-z-lotb11.dgn

USERNAME => s124196 DATE PLOTTED => 16-JUN-2012 TIME PLOTTED => 12:17

DIST	COUNTY	ROUTE	POST MILES TOTAL PROJECT	SHEET No.	TOTAL SHEETS
12	Ora	73	10.7/11.6	48	51

Kristopher Barker 4-13-12
CERTIFIED ENGINEERING GEOLOGIST DATE

6-11-12
PLANS APPROVAL DATE

PROFESSIONAL GEOLOGIST Kristopher Barker No. 2383 Exp. 8-31-13 CERTIFIED ENGINEERING GEOLOGIST STATE OF CALIFORNIA

The State of California or its officers or agents shall not be responsible for the accuracy or completeness of electronic copies of this plan sheet.

This LOTB sheet was prepared in accordance with the Caltrans Soil & Rock Logging, Classification, & Presentation Manual (2010 Edition).
See 2010 Standard Plans A10F and A10G for Soil Legend, and A10H for Rock Legend.

FOR PLAN VIEW, SEE
"LOG OF TEST BORINGS 1 OF 15"

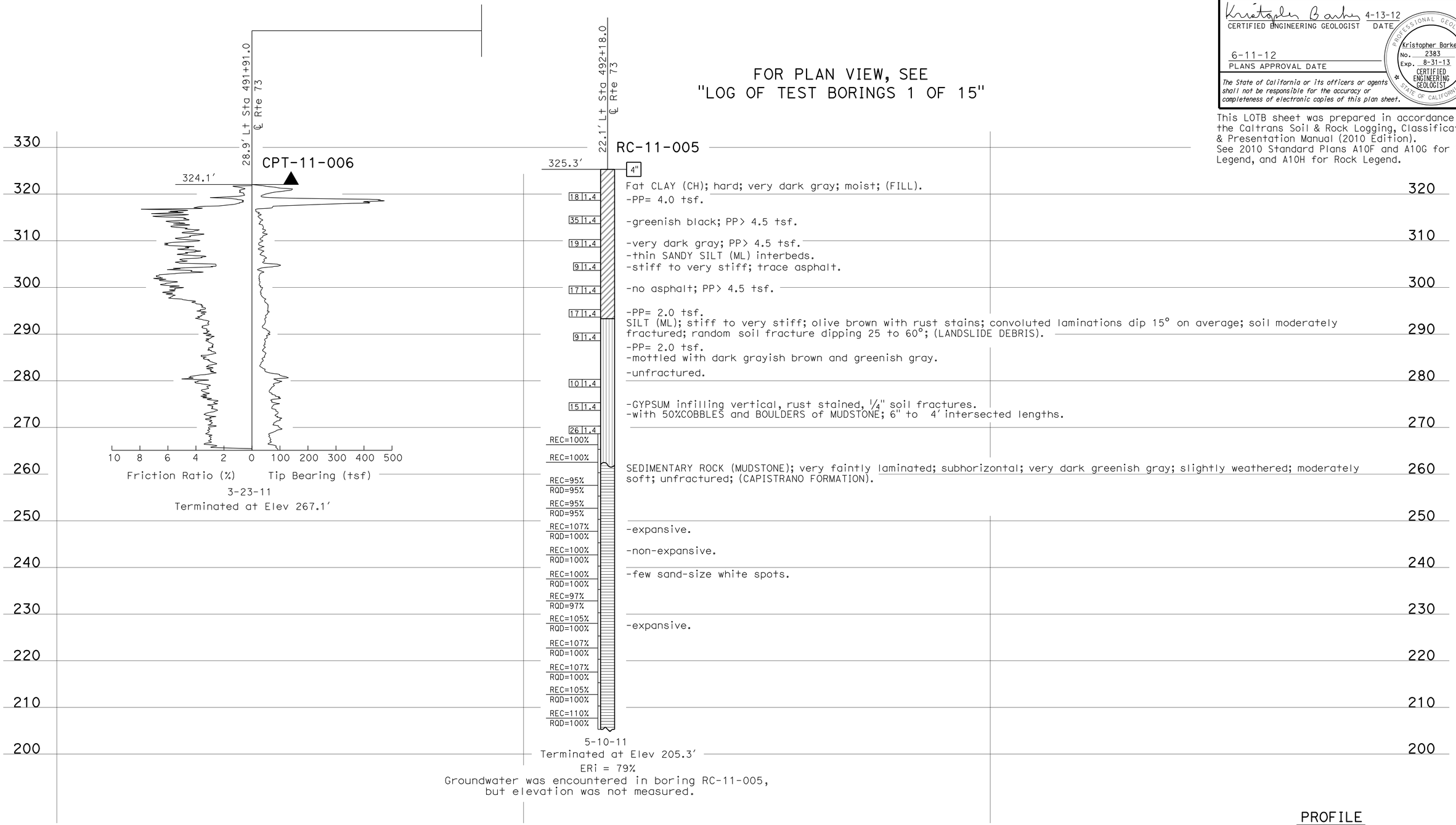

PROFILE
Horiz: 1" = 10'
Vert: 1" = 10'

ENGINEERING SERVICES	MATERIALS AND GEOTECHNICAL SERVICES	STATE OF CALIFORNIA DEPARTMENT OF TRANSPORTATION	DIVISION OF ENGINEERING SERVICES STRUCTURE DESIGN DESIGN BRANCH 11	BRIDGE NO. 55E0138 POST MILE 10.7/11.6	RW R488M (RETROFIT-SHEAR PILE WALL) LOG OF TEST BORINGS 12 OF 15
FUNCTIONAL SUPERVISOR NAME: S. Sukiasian	DRAWN BY: F. Nguyen CHECKED BY: C. Harris	FIELD INVESTIGATION BY: K. Barker			

OGS CIVIL LOG OF TEST BORINGS SHEET

ORIGINAL SCALE IN INCHES FOR REDUCED PLANS 0 1 2 3

UNIT: 3643
PROJECT NUMBER & PHASE: 12120001101 CONTRACT NO.: 0M5501

DISREGARD PRINTS BEARING EARLIER REVISION DATES → REVISION DATES ~~03-02-12~~ 04-13-12 ~~04-26-12~~ SHEET 23 OF 26

FILE => rwr488m-z-lotb12.dgn

USERNAME => s124496 DATE PLOTTED => 16-JUN-2012 TIME PLOTTED => 12:17

DIST	COUNTY	ROUTE	POST MILES TOTAL PROJECT	SHEET No.	TOTAL SHEETS
12	Ora	73	10.7/11.6	49	51

Joseph S. Pratt 4-13-12
CERTIFIED ENGINEERING GEOLOGIST DATE

6-11-12
PLANS APPROVAL DATE

PROFESSIONAL GEOLOGIST Joseph S. Pratt No. 2141 Exp. 5-31-13 CERTIFIED ENGINEERING GEOLOGIST STATE OF CALIFORNIA

The State of California or its officers or agents shall not be responsible for the accuracy or completeness of electronic copies of this plan sheet.

This LOTB sheet was prepared in accordance with the Caltrans Soil & Rock Logging, Classification, & Presentation Manual (2010 Edition).
See 2010 Standard Plans A10F and A10G for Soil Legend, and A10H for Rock Legend.

FOR PLAN VIEW, SEE
"LOG OF TEST BORINGS 1 OF 15"

23.1' Rt Sta 492+19.0
℄ Rte 73

RC-11-004

328.3'

330 — 4.5 Lean to Fat CLAY with SAND (CL/CH); very stiff; olive brown and olive gray; moist; little fine SAND; few coarse and fine, subangular and subrounded GRAVEL, (≤ 1.5"), very soft SILTSTONE and CLAYSTONE; trace flattened dirt clods (3"); PP= 3.0 tsf; (FILL).

320 — 11 1.4; 12 1.4 -trace flattened dirt clods (0.5"); pp= 2.0 tsf.
-PP= 2.5 tsf.

310 — 25 1.4 -asphalt fragment (0.5")
27 1.4 -hard; PP= 4.0 tsf.
-hard; concrete fragment (1"); asphalt fragment (0.9").

300 — REC=52% SEDIMENTARY ROCK (POORLY INDURATED CLAYSTONE); very thinly to moderately bedded; beds dip 15°; olive brown and dark grayish brown; from moderately to slightly weathered; very soft; unfractured; (Lean to fat CLAY (CL/CH); hard; moist; PP> 4.5 tsf); trace sporadic calcite nodules (≤ 1.5"); landslide material (CAPISTRANO FORMATION).
REC=42% -irregular wavy bedding; beds dip 20°; little sporadic thin lenses of fine and coarse flat and elongated GRAVEL; very soft CLAYSTONE and SILTSTONE in CLAYSTONE matrix.

290 — REC=50% -irregular wavy bedding (ball and pillow structures); light olive brown and olive; few fine and coarse GRAVEL, very soft CLAYSTONE clasts (≤ 1"); trace sporadic GYPSUM and calcite nodules (≤ 1").
REC=42% -dark grayish brown and olive brown; (very stiff; PP= 3.2 tsf).
-beds dip 15°; light olive brown; PP= 2.5 tsf.

280 — REC=100% -trace sporadic GYPSUM lenses (0.25" thick); few moderately spaced, irregular arcuate and linear slip surfaces/cracks infilled with GYPSUM (from 0.06 to 0.13"); crack/slip surfaces dip from 25 to 60°; trace crack/slip surfaces dip 80° and ferric oxide stained, PP= 3.5 tsf.
REC=92% -light olive brown and olive; from moderately to closely spaced slip surfaces/cracks lined with ferric oxide and infilled with GYPSUM (from 0.06 to 0.13"); cracks/slip surfaces dip from 20, 45, and 80° and are continuous and discontinuous (truncated), PP> 4.5 tsf.

270 — REC=100% SEDIMENTARY ROCK (POORLY INDURATED CLAYSTONE); from very thinly to thinly bedded; convoluted beds; beds dip from 20 to 35 degrees; alternating olive brown and very dark grayish brown; from moderately to slightly weathered; very soft; unfractured; moderately spaced slip surfaces/cracks totally infilled with GYPSUM (from 0.13 to 0.19") and dip from 20, 40, and 55 degrees (Fat CLAY (CH); hard; moist; PP > 4.5 tsf); landslide material.
REC=70%

260 — REC=82% RQD=82% SEDIMENTARY ROCK (Poorly indurated CLAYSTONE); very thinly to thickly bedded; beds dip 15°; dark olive gray and very dark grayish brown; slightly weathered; very soft; very slightly fractured to unfractured; (Fat CLAY (CH); hard; moist; few SAND; PP> 4.5 tsf; (CAPISTRANO FORMATION).
-continuous fracture lined with ferric oxide and infilled with GYPSUM; ferric oxide staining.
REC=98% RQD=98% -incipient fracture dipping 75°.

250 — REC=106% RQD=106% -trace calcite nodule (1").
REC=85% RQD=85% SEDIMENTARY ROCK (CLAYSTONE); laminated to thickly bedded; beds dip 15°; very dark grayish brown; slightly weathered; very soft to soft; unfractured; PP> 4.5 tsf; (CAPISTRANO FORMATION).
REC=100% RQD=100% -trace snail and other fossil debris.

240 — REC=24% RQD=0% SEDIMENTARY ROCK (CLAYSTONE); from thinly to moderately bedded with very thin interbeds of SILTSTONE and SANDSTONE; beds dip from 10 to 15 degees. CLAYSTONE; very dark grayish brown; slightly weathered; from very soft to soft; unfractured. SILTSTONE; very dark grayish brown; slightly weathered; moderately hard; unfractured. SANDSTONE; fine-grained; very dark grayish brown; slightly weathered; moderately hard; contains little fine and coarse Gravel.
REC=0% -very intensely to intensely fractured; fractures dip 60°; rough surfaces.

230 — REC=106% RQD=106% SEDIMENTARY ROCK (CLAYSTONE); laminated to thickly bedded; beds dip 15 to 20°; very dark grayish brown and dark olive brown; slightly weathered; very soft to soft; unfractured; PP> 4.5 tsf.
REC=96% RQD=96% -trace sporadic calcite nodules (≤ 0.75").

220 — REC=96% RQD=96%
REC=96% RQD=96% -trace pelecypod debris.

210 — REC=94% RQD=94%

4-14-11
Terminated at Elev 207.3'
ERi = 79%

200 — Groundwater was encountered in boring RC-11-004, but elevation was not measured.

492+00 493+00 494+00

PROFILE
Horiz: 1" = 10'
Vert: 1" = 10'

ENGINEERING SERVICES	MATERIALS AND GEOTECHNICAL SERVICES	STATE OF CALIFORNIA DEPARTMENT OF TRANSPORTATION	DIVISION OF ENGINEERING SERVICES STRUCTURE DESIGN DESIGN BRANCH 11	BRIDGE NO. 55E0138 POST MILE 10.7/11.6	RW R488M (RETROFIT-SHEAR PILE WALL) LOG OF TEST BORINGS 13 OF 15
FUNCTIONAL SUPERVISOR NAME: S. Sukiasian	DRAWN BY: F. Nguyen CHECKED BY: C. Harris	FIELD INVESTIGATION BY: J. Pratt			

OGS CIVIL LOG OF TEST BORINGS SHEET — ORIGINAL SCALE IN INCHES FOR REDUCED PLANS 0 1 2 3 — UNIT: 3643 PROJECT NUMBER & PHASE: 12120001101 CONTRACT NO.: OM5501 — DISREGARD PRINTS BEARING EARLIER REVISION DATES — REVISION DATES 03-02-12 04-06-12 04-10-12 04-13-12 — SHEET 24 OF 26

FILE => rwr488m-z-lotb13.dgn

USERNAME => s124196 DATE PLOTTED => 16-JUN-2012 TIME PLOTTED => 12:17

DIST	COUNTY	ROUTE	POST MILES TOTAL PROJECT	SHEET No.	TOTAL SHEETS
12	Ora	73	10.7/11.6	50	51

Kristopher Barker 4-13-12
CERTIFIED ENGINEERING GEOLOGIST DATE

6-11-12
PLANS APPROVAL DATE

PROFESSIONAL GEOLOGIST Kristopher Barker No. 2383 Exp. 8-31-13 CERTIFIED ENGINEERING GEOLOGIST STATE OF CALIFORNIA

The State of California or its officers or agents shall not be responsible for the accuracy or completeness of electronic copies of this plan sheet.

This LOTB sheet was prepared in accordance with the Caltrans Soil & Rock Logging, Classification, & Presentation Manual (2010 Edition).
See 2010 Standard Plans A10F and A10G for Soil Legend, and A10H for Rock Legend.

FOR PLAN VIEW, SEE
"LOG OF TEST BORINGS 1 OF 15"

ENGINEERING SERVICES	MATERIALS AND GEOTECHNICAL SERVICES	STATE OF CALIFORNIA DEPARTMENT OF TRANSPORTATION	DIVISION OF ENGINEERING SERVICES STRUCTURE DESIGN DESIGN BRANCH 11	BRIDGE NO. 55E0138 POST MILE 10.7/11.6	RW R488M (RETROFIT-SHEAR PILE WALL) LOG OF TEST BORINGS 14 OF 15
FUNCTIONAL SUPERVISOR NAME: S. Sukiasian	DRAWN BY: F. Nguyen CHECKED BY: C. Harris	FIELD INVESTIGATION BY: K. Barker			

OGS CIVIL LOG OF TEST BORINGS SHEET

ORIGINAL SCALE IN INCHES FOR REDUCED PLANS 0 1 2 3

UNIT: 3643
PROJECT NUMBER & PHASE: 12120001101 CONTRACT NO.: 0M5501

DISREGARD PRINTS BEARING EARLIER REVISION DATES

REVISION DATES: 03-02-12 04-13-12 04-30-12 SHEET 25 OF 26

FILE => rwr488m-z-lotb14.dgn

USERNAME => s124496 DATE PLOTTED => 16-JUN-2012 TIME PLOTTED => 12:17

DIST	COUNTY	ROUTE	POST MILES TOTAL PROJECT	SHEET No.	TOTAL SHEETS
12	Ora	73	10.7/11.6	51	51

Joseph S. Pratt 4-13-12
CERTIFIED ENGINEERING GEOLOGIST DATE

6-11-12
PLANS APPROVAL DATE

PROFESSIONAL GEOLOGIST Joseph S. Pratt No. 2141 Exp. 5-31-13 CERTIFIED ENGINEERING GEOLOGIST STATE OF CALIFORNIA

The State of California or its officers or agents shall not be responsible for the accuracy or completeness of electronic copies of this plan sheet.

This LOTB sheet was prepared in accordance with the Caltrans Soil & Rock Logging, Classification, & Presentation Manual (2010 Edition).
See 2010 Standard Plans A10F and A10G for Soil Legend, and A10H for Rock Legend.

FOR PLAN VIEW, SEE
"LOG OF TEST BORINGS 1 OF 15"

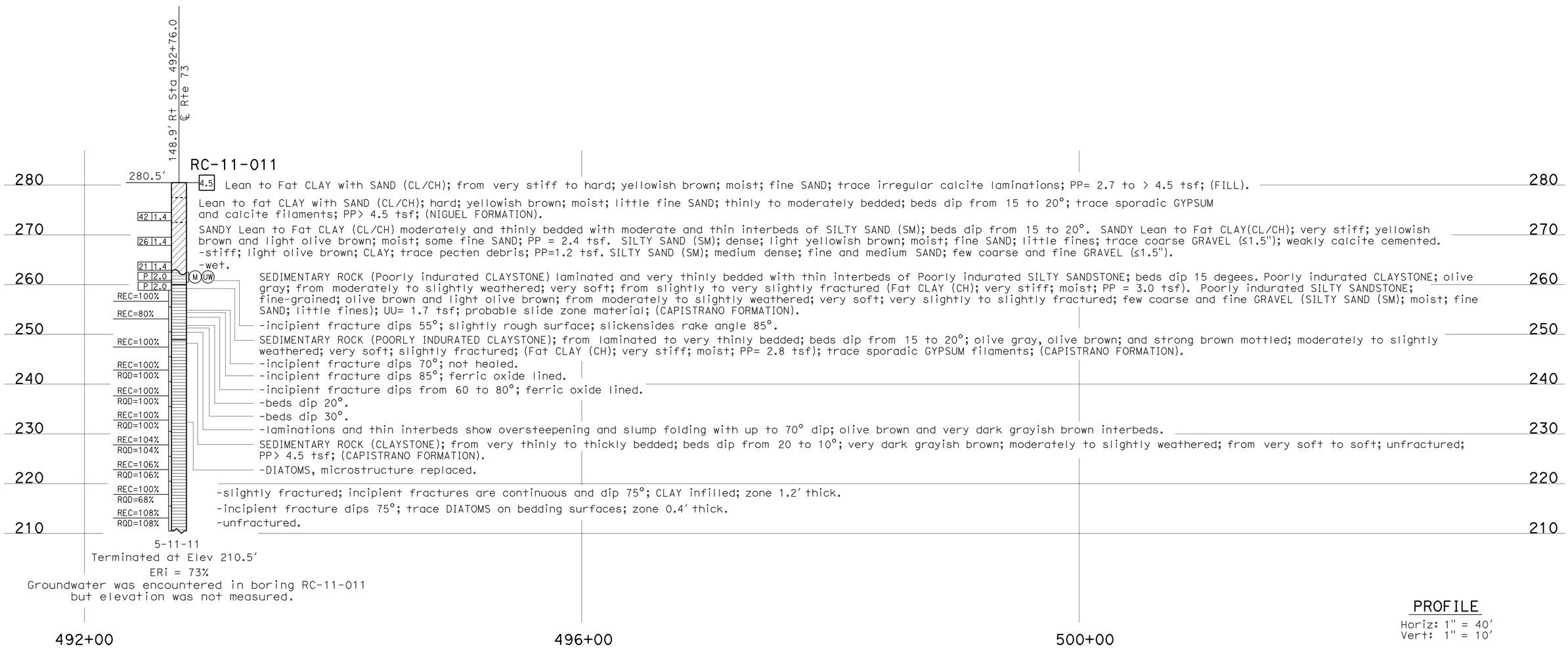

PROFILE
Horiz: 1" = 40'
Vert: 1" = 10'

ENGINEERING SERVICES	MATERIALS AND GEOTECHNICAL SERVICES	STATE OF CALIFORNIA DEPARTMENT OF TRANSPORTATION	DIVISION OF ENGINEERING SERVICES STRUCTURE DESIGN DESIGN BRANCH 11	BRIDGE NO. 55E0138 POST MILE 10.7/11.6	RW R488M (RETROFIT-SHEAR PILE WALL) LOG OF TEST BORINGS 15 OF 15
FUNCTIONAL SUPERVISOR NAME: S. Sukiasian	DRAWN BY: F. Nguyen CHECKED BY: C. Harris	FIELD INVESTIGATION BY: J. Pratt/ K. Lai			

OGS CIVIL LOG OF TEST BORINGS SHEET

ORIGINAL SCALE IN INCHES FOR REDUCED PLANS 0 1 2 3

UNIT: 3643
PROJECT NUMBER & PHASE: 12120001101 CONTRACT NO.: 0M5501

DISREGARD PRINTS BEARING EARLIER REVISION DATES

REVISION DATES				SHEET	OF
03-02-12	04-06-12	04-10-12	04-13-12	26	26

FILE => rwr488m-z-lotb15.dgn

USERNAME => s124496 DATE PLOTTED => 16-JUN-2012 TIME PLOTTED => 12:17