| Dist | COUNTY | ROUTE | POST MILES TOTAL PROJECT | SHEET No. | TOTAL SHEETS |
|---|---|---|---|---|---|
| 12 | Ora | 55, 57, 91 | 17.5/17.9; 15.2/16.0 5.8/6.8; 8.7/R9.5 | 1 | 95 |

STATE OF CALIFORNIA
DEPARTMENT OF TRANSPORTATION

ACHSNH-X059(073)E

# PROJECT PLANS FOR CONSTRUCTION ON
# STATE HIGHWAY
## IN ORANGE COUNTY
## IN ANAHEIM ON ROUTES 55, 57, 91
## AT ROUTE 91/57 SEPARATION
## AND ROUTE 91/55 SEPARATION

TO BE SUPPLEMENTED BY STANDARD PLANS DATED 2015

INDEX OF PLANS


| SHEET No. | DESCRIPTION |
|---|---|
| 1 | TITLE AND LOCATION MAP |
| 2 | KEY MAP AND LINE INDEX |
| 3-11 | LAYOUTS |
| 12-30 | CONSTRUCTION DETAILS |
| 31-42 | UTILITY PLANS |
| 43 | CONSTRUCTION AREA SIGNS |
| 44-60 | TRAFFIC HANDLING PLANS |
| 61-63 | SUMMARY OF QUANTITIES |
| 64-82 | ELECTRICAL PLANS |
| 83-95 | REVISED STANDARD PLANS |


THE STANDARD PLANS LIST APPLICABLE TO THIS CONTRACT IS INCLUDED IN THE NOTICE TO BIDDERS AND SPECIAL PROVISIONS BOOK.

LOCATION MAP

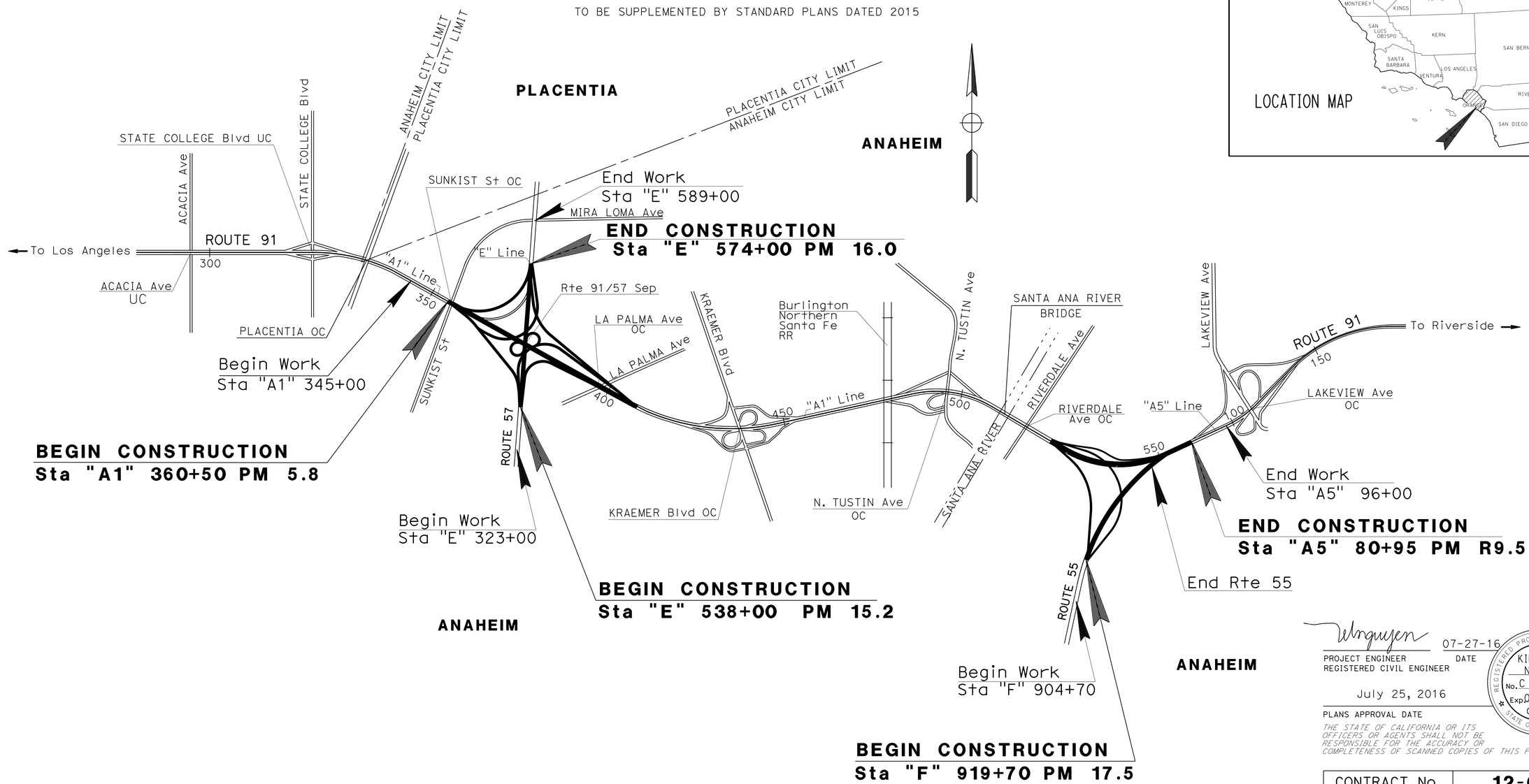


THE CONTRACTOR SHALL POSSESS THE CLASS (OR CLASSES) OF LICENSE AS SPECIFIED IN THE "NOTICE TO BIDDERS."

NO SCALE

PROJECT MANAGER: LEO CHEN
DESIGN MANAGER: MILI LIM STAMATION

PROJECT ENGINEER / REGISTERED CIVIL ENGINEER — DATE: 07-27-16

REGISTERED PROFESSIONAL ENGINEER — KIMBERLY NGUYEN — No. C 64577 — Exp. 06/30/17 — CIVIL — STATE OF CALIFORNIA

July 25, 2016
PLANS APPROVAL DATE

*THE STATE OF CALIFORNIA OR ITS OFFICERS OR AGENTS SHALL NOT BE RESPONSIBLE FOR THE ACCURACY OR COMPLETENESS OF SCANNED COPIES OF THIS PLAN SHEET.*

| CONTRACT No. | 12-0M6104 |
|---|---|
| PROJECT ID | 1212000121 |

LAST REVISION 07-28-16 — DATE PLOTTED => 30-AUG-2016 — TIME PLOTTED => 14:20

| Dist | COUNTY | ROUTE | POST MILES TOTAL PROJECT | SHEET No. | TOTAL SHEETS |
|---|---|---|---|---|---|
| 12 | Ora | 55, 57, 91 | 17.5/17.9; 15.2/16.0 5.8/6.8; 8.7/R9.5 | 2 | 95 |

REGISTERED CIVIL ENGINEER 07-26-16 DATE

07-25-16
PLANS APPROVAL DATE

REGISTERED PROFESSIONAL ENGINEER
KIMBERLY NGUYEN
No. C 64577
Exp. 06/30/17
CIVIL
STATE OF CALIFORNIA

*THE STATE OF CALIFORNIA OR ITS OFFICERS OR AGENTS SHALL NOT BE RESPONSIBLE FOR THE ACCURACY OR COMPLETENESS OF SCANNED COPIES OF THIS PLAN SHEET.*

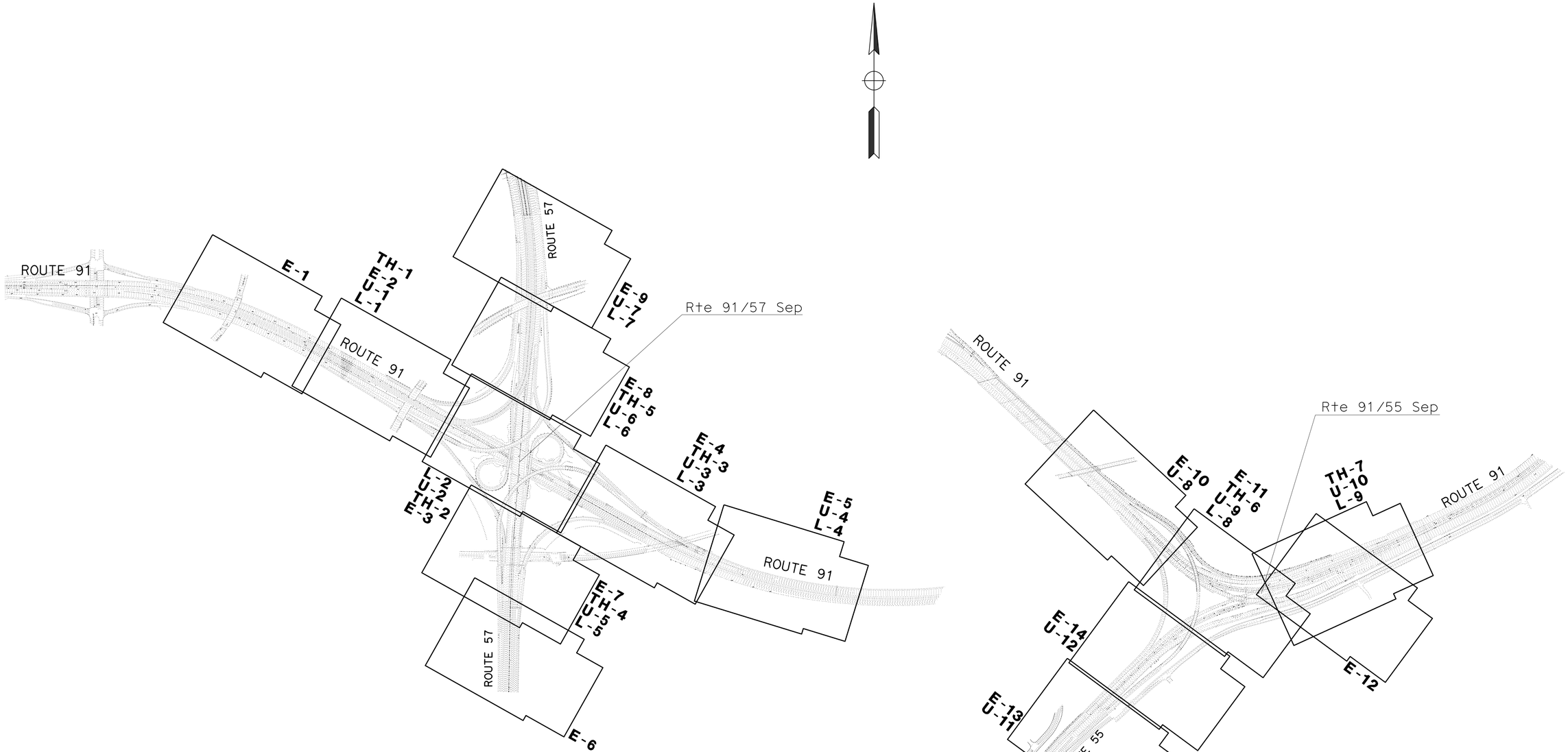


# KEY MAP AND LINE INDEX

NO SCALE

K-1

STATE OF CALIFORNIA - DEPARTMENT OF TRANSPORTATION
Caltrans® DESIGN DIVISION

FUNCTIONAL SUPERVISOR: MILI LIM STAMATION
CALCULATED-DESIGNED BY: KIMBERLY NGUYEN
CHECKED BY: RICK NGO
REVISED BY
DATE REVISED

LAST REVISION DATE PLOTTED => 30-AUG-2016
07-28-16 TIME PLOTTED => 14:20

| Dist | COUNTY | ROUTE | POST MILES TOTAL PROJECT | SHEET No. | TOTAL SHEETS |
|---|---|---|---|---|---|
| 12 | Ora | 55, 57, 91 | 17.5/17.9; 15.2/16.0 5.8/6.8; 8.7/R9.5 | 3 | 95 |

kNguyen 07-26-16
REGISTERED CIVIL ENGINEER DATE

07-25-16
PLANS APPROVAL DATE

REGISTERED PROFESSIONAL ENGINEER KIMBERLY NGUYEN No. C 64577 Exp 06/30/17 CIVIL STATE OF CALIFORNIA

*THE STATE OF CALIFORNIA OR ITS OFFICERS OR AGENTS SHALL NOT BE RESPONSIBLE FOR THE ACCURACY OR COMPLETENESS OF SCANNED COPIES OF THIS PLAN SHEET.*

## NOTES:

1. FOR ACCURATE RIGHT OF WAY DATA, CONTACT RIGHT OF WAY ENGINEERING AT THE DISTRICT OFFICE.
2. EXISTING UTILITY FACILITIES NOT SHOWN ON THESE PLANS.
3. SEE ELECTRICAL PLANS AND UTILITY PLANS FOR EXISTING CONDUIT, FIBER OPTIC CONDUITS AND CABLES LOCATION.
4. FOR DETAILS NOT SHOWN SEE STANDARD PLANS, AND MANUFACTURER DETAILS.
5. ALL FIELD DIMENSIONS SHALL BE VERIFIED BY THE CONTRACTOR PRIOR TO CONSTRUCTION.
6. EXISTING PLANTING AND IRRIGATION TO BE MAINTAINED/PROTECTED.
7. EXISTING PLANTING/IRRIGATION TO BE REMOVED.
8. PLANTS TO BE REPLACED AND IRRIGATION FACILITY TO BE REPAIRED/REPLACED.

## ABBREVIATIONS:

| | |
|---|---|
| 11B | TYPE 11B LAYOUT |
| 12A | TYPE 12A LAYOUT |
| 12B | TYPE 12B LAYOUT |
| 12C | TYPE 12C LAYOUT |
| 12D | TYPE 12D LAYOUT |
| 12DD | TYPE 12DD LAYOUT |
| 16A | TYPE 16A LAYOUT |
| 16B | TYPE 16B LAYOUT |
| BPEA | BURIED POST END ANCHOR |
| AFTS | ALTERNATIVE FLARED TERMINAL SYSTEM |
| AITS | ALTERNATIVE IN-LINE TERMINAL SYSTEM |
| CAB | CONCRETE ANCHOR BLOCK |
| CB (XX) | CONCRETE BARRIER (TYPE XX) |
| DIKE (A) | HOT MIX ASPHALT DIKE (TYPE A) |
| DIKE (C) | HOT MIX ASPHALT DIKE (TYPE C) |
| EAA | END ANCHOR ASSEMBLY (TYPE SFT) |
| MGS(WP) | MIDWEST GUARDRAIL SYSTEM (WOOD POST) |
| MGS(7) | MIDWEST GUARDRAIL SYSTEM (7' WOOD POST) |
| STBB | SINGLE THRIE BEAM BARRIER (WOOD POST) |
| WT | W-BEAM TRANSITION |
| TR | TRANSITION RAILING (TYPE WB-31) |
| CBT | CONCRETE BARRIER TRANSITION |
| CC | CRASH CUSHION |
| RM | REMOVE |

## LEGEND:

- # WORK LOCATION ID
- TEMPORARY DRAINAGE INLET PROTECTION
- # CURVE NUMBER

## CURVE DATA

| No. ⊕ | R | Δ | T | L |
|---|---|---|---|---|
| 1 | 3000' | 03°39'56" | 96.00' | 191.93' |
| 2 | 600' | 110°51'23" | 870.67' | 1160.89' |
| 3 | 5000' | 02°55'00" | 127.29' | 254.53' |
| 4 | 1000' | 15°34'14" | 136.72' | 271.76' |

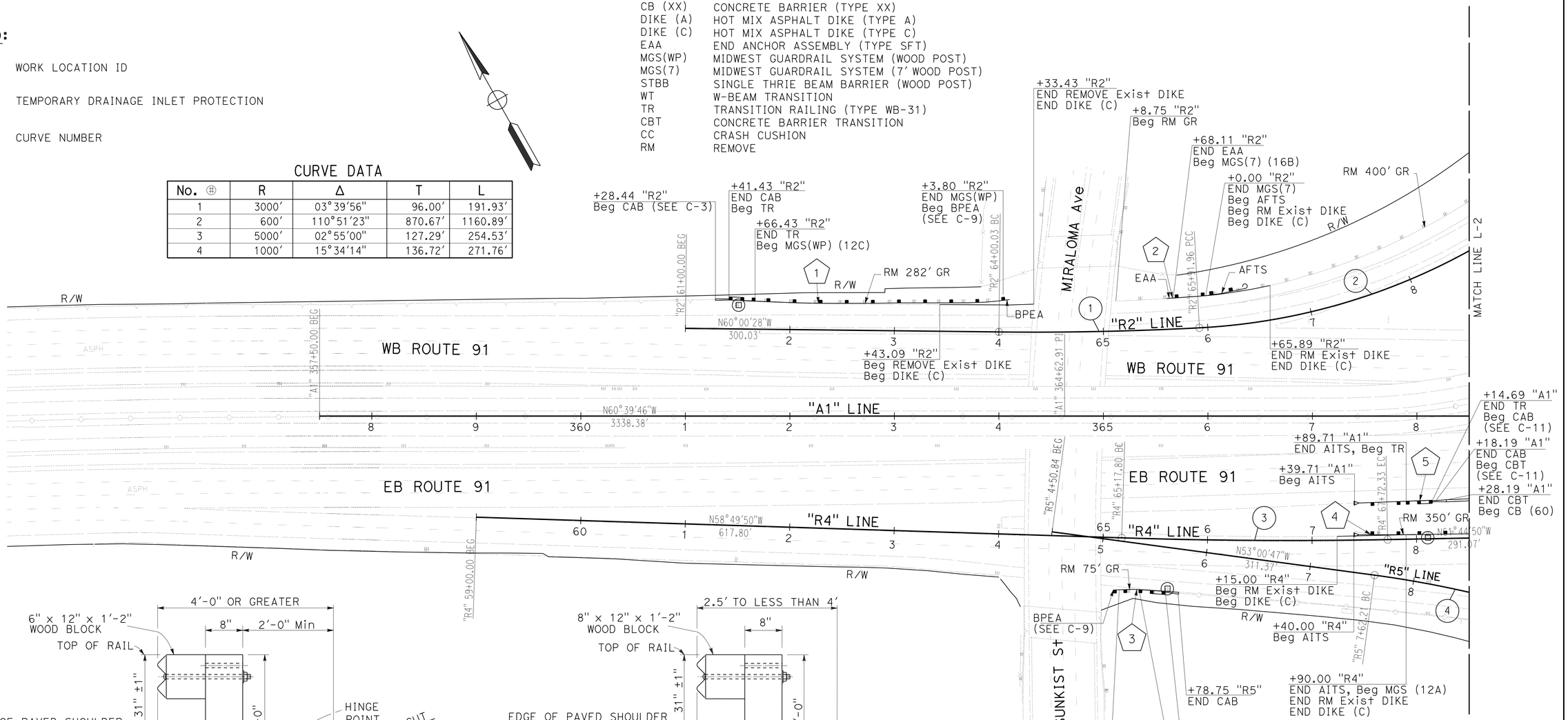


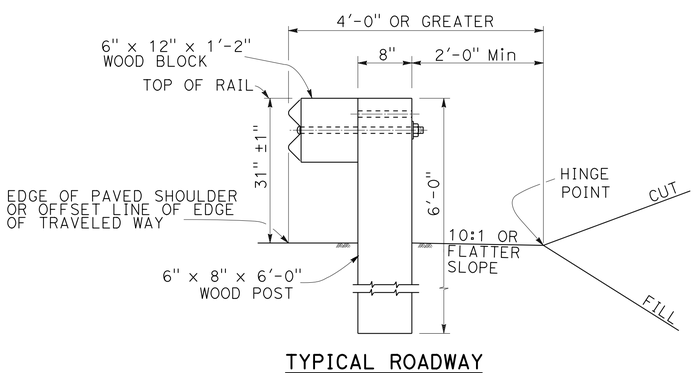


TYPICAL ROADWAY
INSTALLATION FOR MGS(WP)

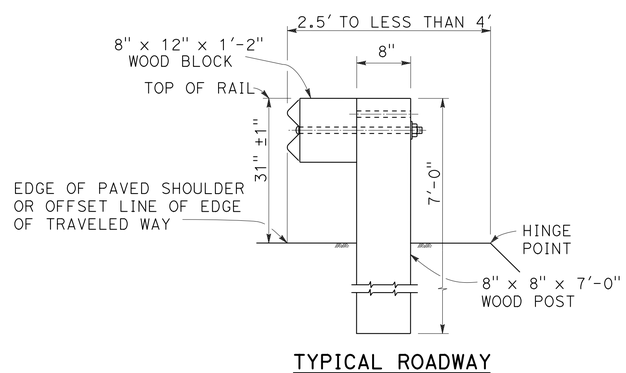


TYPICAL ROADWAY
INSTALLATION FOR MGS(7)

# LAYOUT

SCALE 1" = 50'

L-1

STATE OF CALIFORNIA - DEPARTMENT OF TRANSPORTATION
Caltrans® DESIGN DIVISION

FUNCTIONAL SUPERVISOR: MILI LIM STAMATION
CALCULATED-DESIGNED BY: KIMBERLY NGUYEN
CHECKED BY: RICK NGO
REVISED BY
DATE REVISED

LAST REVISION DATE PLOTTED => 30-AUG-2016
07-28-16 TIME PLOTTED => 14:20

| Dist | COUNTY | ROUTE | POST MILES TOTAL PROJECT | SHEET No. | TOTAL SHEETS |
|---|---|---|---|---|---|
| 12 | Ora | 55, 57, 91 | 17.5/17.9; 15.2/16.0 5.8/6.8; 8.7/R9.5 | 4 | 95 |

REGISTERED CIVIL ENGINEER 07-26-16 DATE

07-25-16
PLANS APPROVAL DATE

REGISTERED PROFESSIONAL ENGINEER KIMBERLY NGUYEN No. C 64577 Exp 06/30/17 CIVIL STATE OF CALIFORNIA

*THE STATE OF CALIFORNIA OR ITS OFFICERS OR AGENTS SHALL NOT BE RESPONSIBLE FOR THE ACCURACY OR COMPLETENESS OF SCANNED COPIES OF THIS PLAN SHEET.*

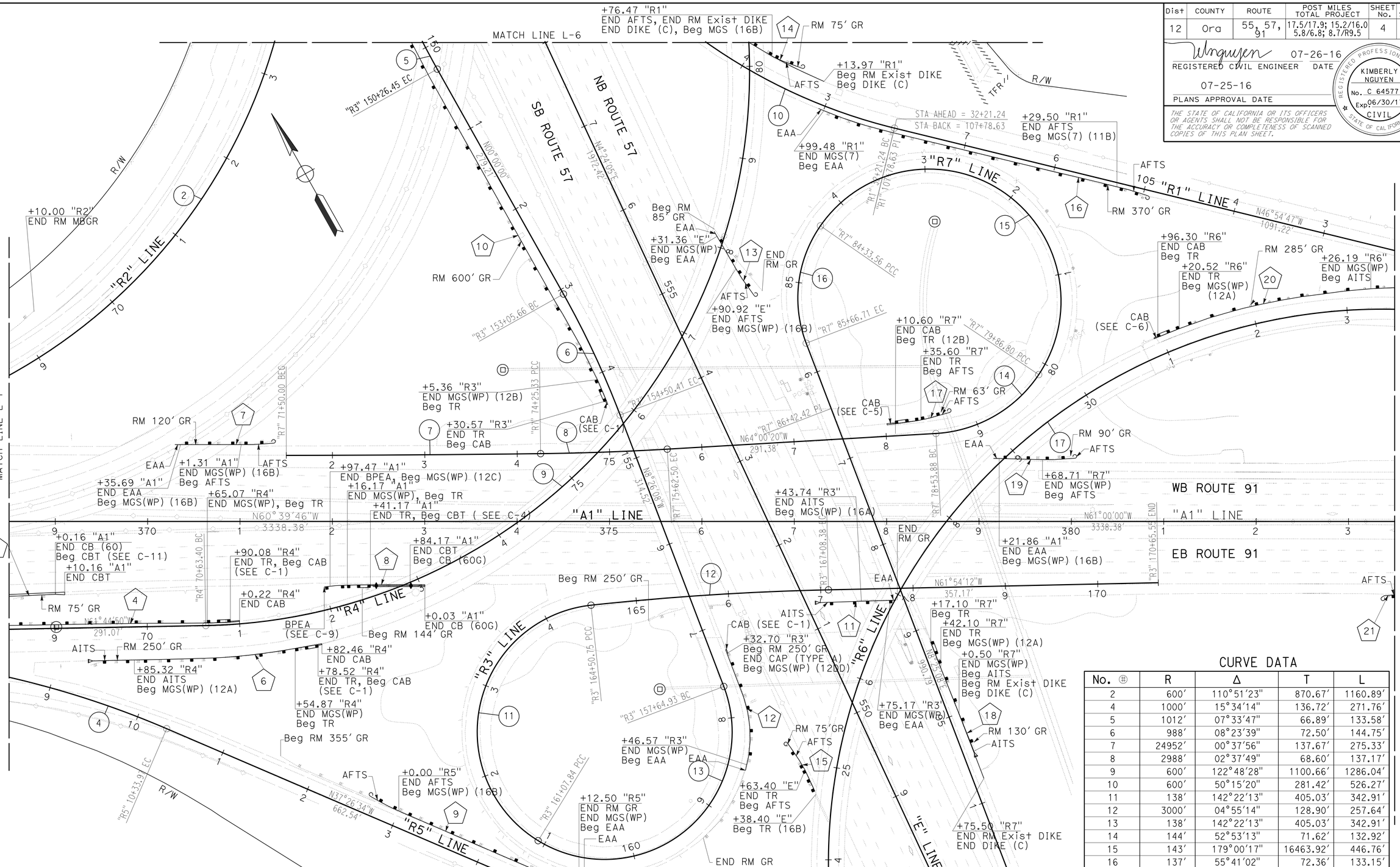


## CURVE DATA

| No. ⊕ | R | Δ | T | L |
|---|---|---|---|---|
| 2 | 600′ | 110°51′23" | 870.67′ | 1160.89′ |
| 4 | 1000′ | 15°34′14" | 136.72′ | 271.76′ |
| 5 | 1012′ | 07°33′47" | 66.89′ | 133.58′ |
| 6 | 988′ | 08°23′39" | 72.50′ | 144.75′ |
| 7 | 24952′ | 00°37′56" | 137.67′ | 275.33′ |
| 8 | 2988′ | 02°37′49" | 68.60′ | 137.17′ |
| 9 | 600′ | 122°48′28" | 1100.66′ | 1286.04′ |
| 10 | 600′ | 50°15′20" | 281.42′ | 526.27′ |
| 11 | 138′ | 142°22′13" | 405.03′ | 342.91′ |
| 12 | 3000′ | 04°55′14" | 128.90′ | 257.64′ |
| 13 | 138′ | 142°22′13" | 405.03′ | 342.91′ |
| 14 | 144′ | 52°53′13" | 71.62′ | 132.92′ |
| 15 | 143′ | 179°00′17" | 16463.92′ | 446.76′ |
| 16 | 137′ | 55°41′02" | 72.36′ | 133.15′ |
| 17 | 600′ | 131°47′17" | 1340.94′ | 1380.08′ |

**NOTE:**

FOR ACCURATE RIGHT OF WAY DATA, CONTACT RIGHT OF WAY ENGINEERING AT THE DISTRICT OFFICE.

# LAYOUT

SCALE 1" = 50′

**L-2**

STATE OF CALIFORNIA - DEPARTMENT OF TRANSPORTATION
Caltrans® DESIGN DIVISION

FUNCTIONAL SUPERVISOR: MILI LIM STAMATION
CALCULATED-DESIGNED BY: KIMBERLY NGUYEN
CHECKED BY: RICK NGO
REVISED BY / DATE REVISED

LAST REVISION 07-28-16 | DATE PLOTTED => 30-AUG-2016 | TIME PLOTTED => 14:20

| Dist | COUNTY | ROUTE | POST MILES TOTAL PROJECT | SHEET No. | TOTAL SHEETS |
|---|---|---|---|---|---|
| 12 | Ora | 55, 57, 91 | 17.5/17.9; 15.2/16.0 5.8/6.8; 8.7/R9.5 | 5 | 95 |

REGISTERED CIVIL ENGINEER 07-26-16 DATE

07-25-16
PLANS APPROVAL DATE

REGISTERED PROFESSIONAL ENGINEER KIMBERLY NGUYEN No. C 64577 Exp. 06/30/17 CIVIL STATE OF CALIFORNIA

*THE STATE OF CALIFORNIA OR ITS OFFICERS OR AGENTS SHALL NOT BE RESPONSIBLE FOR THE ACCURACY OR COMPLETENESS OF SCANNED COPIES OF THIS PLAN SHEET.*

**NOTE:**

FOR ACCURATE RIGHT OF WAY DATA, CONTACT RIGHT OF WAY ENGINEERING AT THE DISTRICT OFFICE.

## CURVE DATA

| No. ⊕ | R | Δ | T | L |
|---|---|---|---|---|
| 17 | 600′ | 131°47′17" | 1340.94′ | 1380.08′ |
| 18 | 600′ | 108°21′40" | 831.33′ | 1134.75′ |
| 19 | 3000′ | 01°21′46" | 35.68′ | 71.35′ |
| 20 | 3000′ | 02°31′38" | 66.17′ | 132.33′ |
| 21 | 2000′ | 11°35′42" | 203.06′ | 404.74′ |
| 22 | 1600′ | 14°06′09" | 197.91′ | 393.82′ |
| 23 | 4800′ | 15°35′26" | 657.11′ | 1306.11′ |

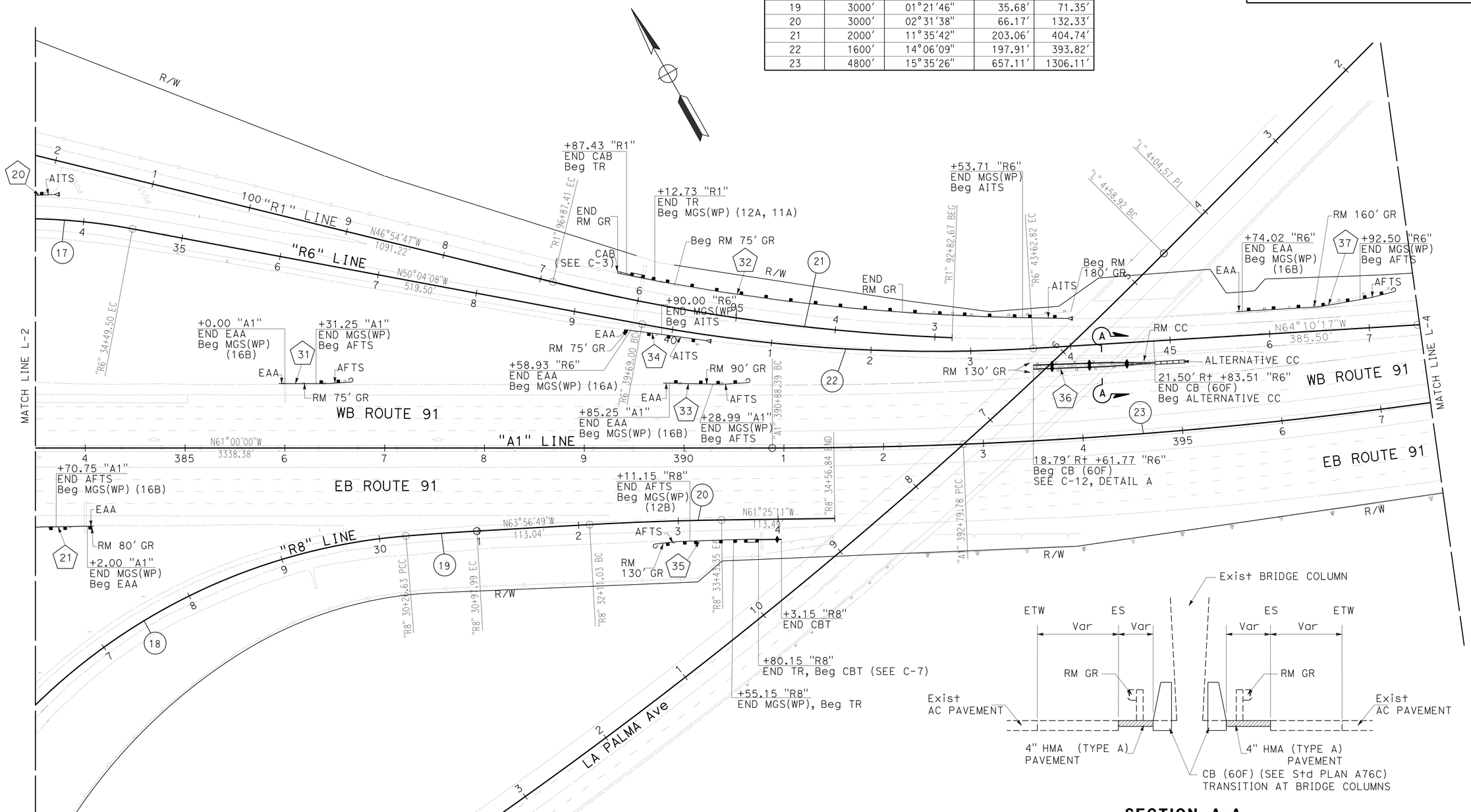


**SECTION A-A**
NO SCALE

# LAYOUT
SCALE 1" = 50′

**L-3**

STATE OF CALIFORNIA - DEPARTMENT OF TRANSPORTATION
Caltrans DESIGN DIVISION

FUNCTIONAL SUPERVISOR: MILI LIM STAMATION
CALCULATED-DESIGNED BY: KIMBERLY NGUYEN
CHECKED BY: RICK NGO
REVISED BY
DATE REVISED

LAST REVISION 07-28-16
DATE PLOTTED => 30-AUG-2016
TIME PLOTTED => 14:20

| Dist | COUNTY | ROUTE | POST MILES TOTAL PROJECT | SHEET No. | TOTAL SHEETS |
|---|---|---|---|---|---|
| 12 | Ora | 55, 57, 91 | 17.5/17.9; 15.2/16.0 5.8/6.8; 8.7/R9.5 | 6 | 95 |

REGISTERED CIVIL ENGINEER 07-26-16 DATE

07-25-16
PLANS APPROVAL DATE

REGISTERED PROFESSIONAL ENGINEER KIMBERLY NGUYEN No. C 64577 Exp. 06/30/17 CIVIL STATE OF CALIFORNIA

*THE STATE OF CALIFORNIA OR ITS OFFICERS OR AGENTS SHALL NOT BE RESPONSIBLE FOR THE ACCURACY OR COMPLETENESS OF SCANNED COPIES OF THIS PLAN SHEET.*

**NOTE:**

FOR ACCURATE RIGHT OF WAY DATA, CONTACT RIGHT OF WAY ENGINEERING AT THE DISTRICT OFFICE.

CURVE DATA

| No. ⊕ | R | Δ | T | L |
|---|---|---|---|---|
| 23 | 4800′ | 15°35′26" | 657.11′ | 1306.11′ |
| 24 | 2000′ | 07°32′06" | 131.70′ | 263.02′ |
| 25 | 4800′ | 27°18′55" | 1166.35′ | 2288.35′ |

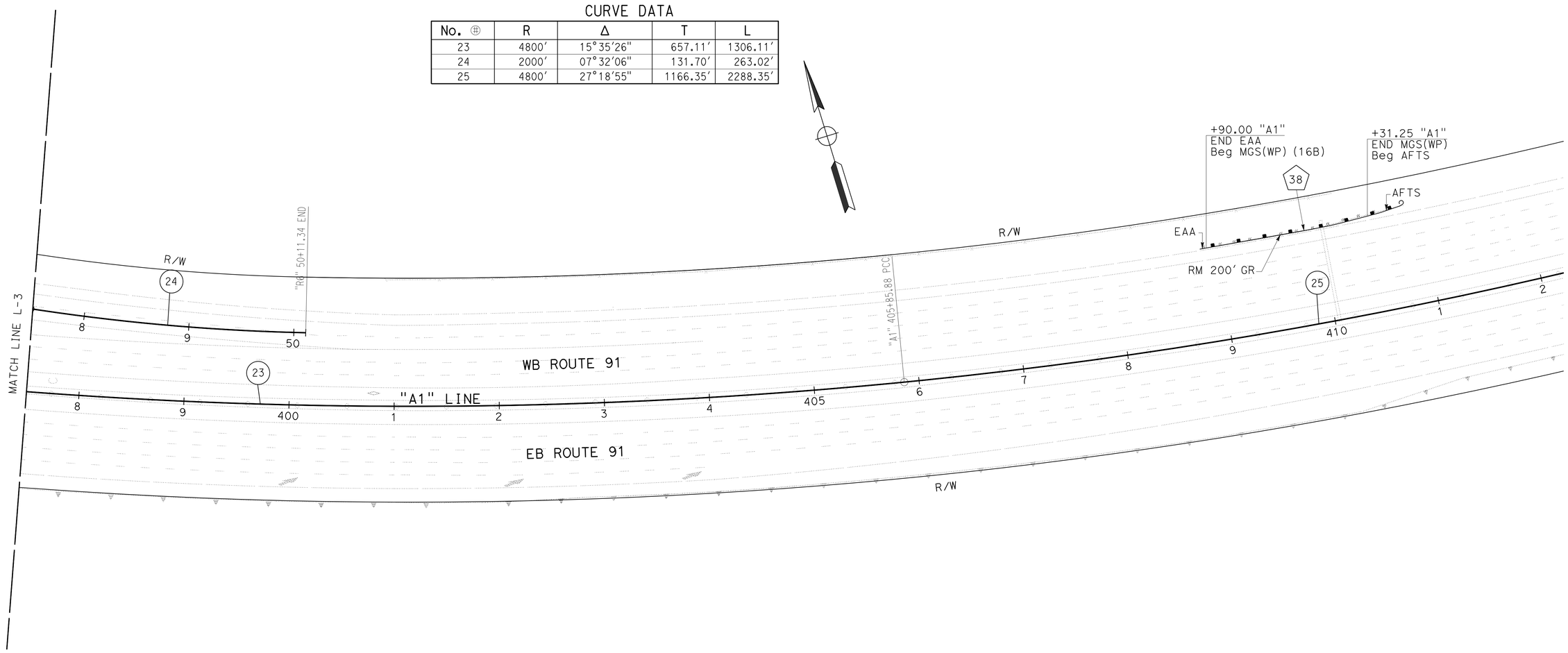


**LAYOUT**
SCALE 1" = 50′

**L-4**

STATE OF CALIFORNIA - DEPARTMENT OF TRANSPORTATION
Caltrans® **DESIGN DIVISION**

FUNCTIONAL SUPERVISOR: MILI LIM STAMATION

CALCULATED-DESIGNED BY: KIMBERLY NGUYEN
CHECKED BY: RICK NGO

REVISED BY
DATE REVISED

LAST REVISION 07-28-16 | DATE PLOTTED => 30-AUG-2016 | TIME PLOTTED => 14:20

| Dist | COUNTY | ROUTE | POST MILES TOTAL PROJECT | SHEET No. | TOTAL SHEETS |
|---|---|---|---|---|---|
| 12 | Ora | 55, 57, 91 | 17.5/17.9; 15.2/16.0 5.8/6.8; 8.7/R9.5 | 7 | 95 |

REGISTERED CIVIL ENGINEER 07-26-16 DATE

07-25-16
PLANS APPROVAL DATE

REGISTERED PROFESSIONAL ENGINEER KIMBERLY NGUYEN No. C 64577 Exp. 06/30/17 CIVIL STATE OF CALIFORNIA

*THE STATE OF CALIFORNIA OR ITS OFFICERS OR AGENTS SHALL NOT BE RESPONSIBLE FOR THE ACCURACY OR COMPLETENESS OF SCANNED COPIES OF THIS PLAN SHEET.*

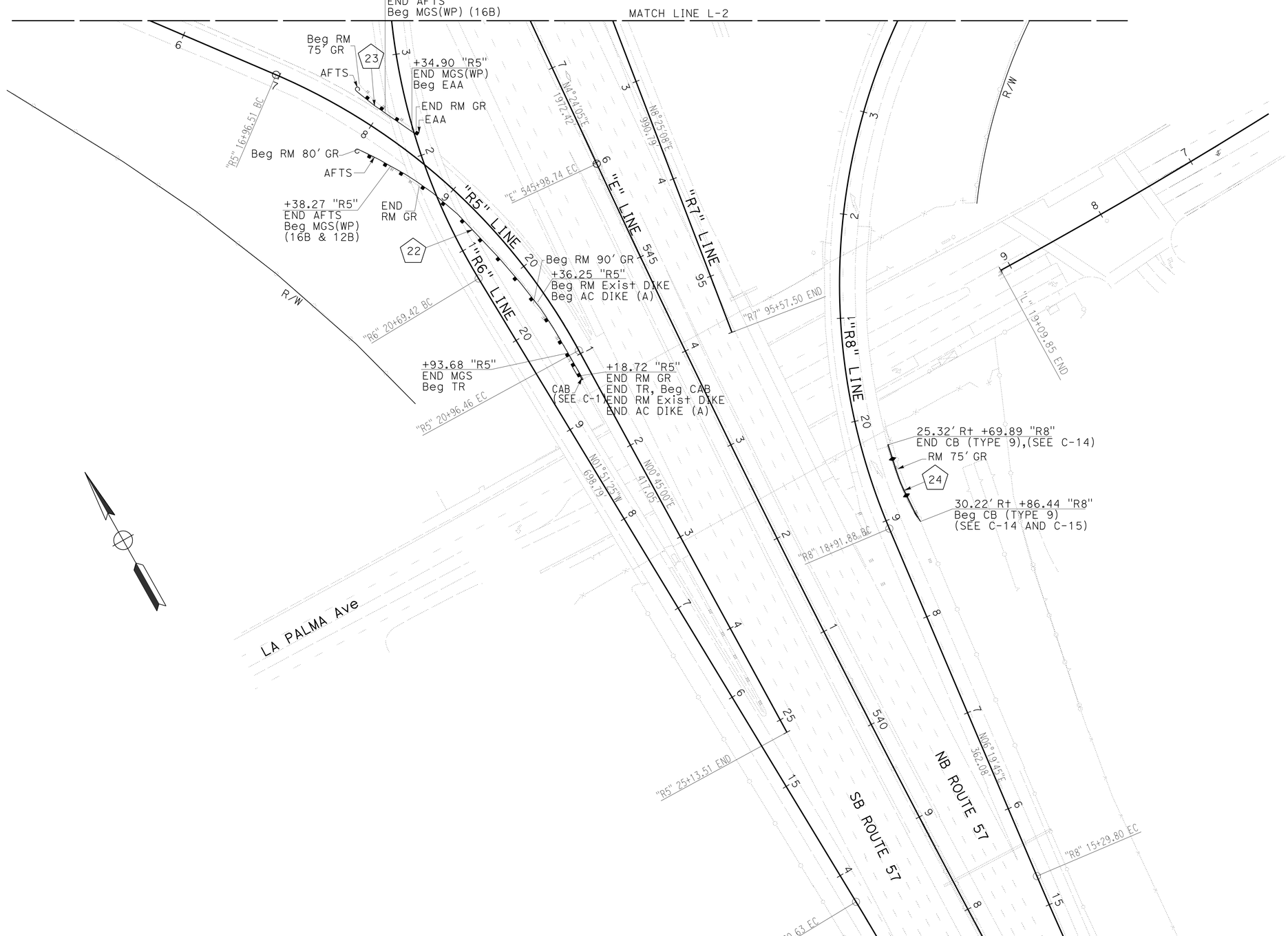


NOTE:

FOR ACCURATE RIGHT OF WAY DATA, CONTACT RIGHT OF WAY ENGINEERING AT THE DISTRICT OFFICE.

# LAYOUT

SCALE 1" = 50'

L-5

STATE OF CALIFORNIA - DEPARTMENT OF TRANSPORTATION
Caltrans DESIGN DIVISION

FUNCTIONAL SUPERVISOR: MILI LIM STAMATION
CALCULATED-DESIGNED BY: KIMBERLY NGUYEN
CHECKED BY: RICK NGO
REVISED BY
DATE REVISED

LAST REVISION DATE PLOTTED => 30-AUG-2016
07-28-16 TIME PLOTTED => 14:20

| Dist | COUNTY | ROUTE | POST MILES TOTAL PROJECT | SHEET No. | TOTAL SHEETS |
|---|---|---|---|---|---|
| 12 | Ora | 55, 57, 91 | 17.5/17.9; 15.2/16.0 5.8/6.8; 8.7/R9.5 | 8 | 95 |

REGISTERED CIVIL ENGINEER DATE 07-26-16

07-25-16
PLANS APPROVAL DATE

REGISTERED PROFESSIONAL ENGINEER KIMBERLY NGUYEN No. C 64577 Exp. 06/30/17 CIVIL STATE OF CALIFORNIA

*THE STATE OF CALIFORNIA OR ITS OFFICERS OR AGENTS SHALL NOT BE RESPONSIBLE FOR THE ACCURACY OR COMPLETENESS OF SCANNED COPIES OF THIS PLAN SHEET.*

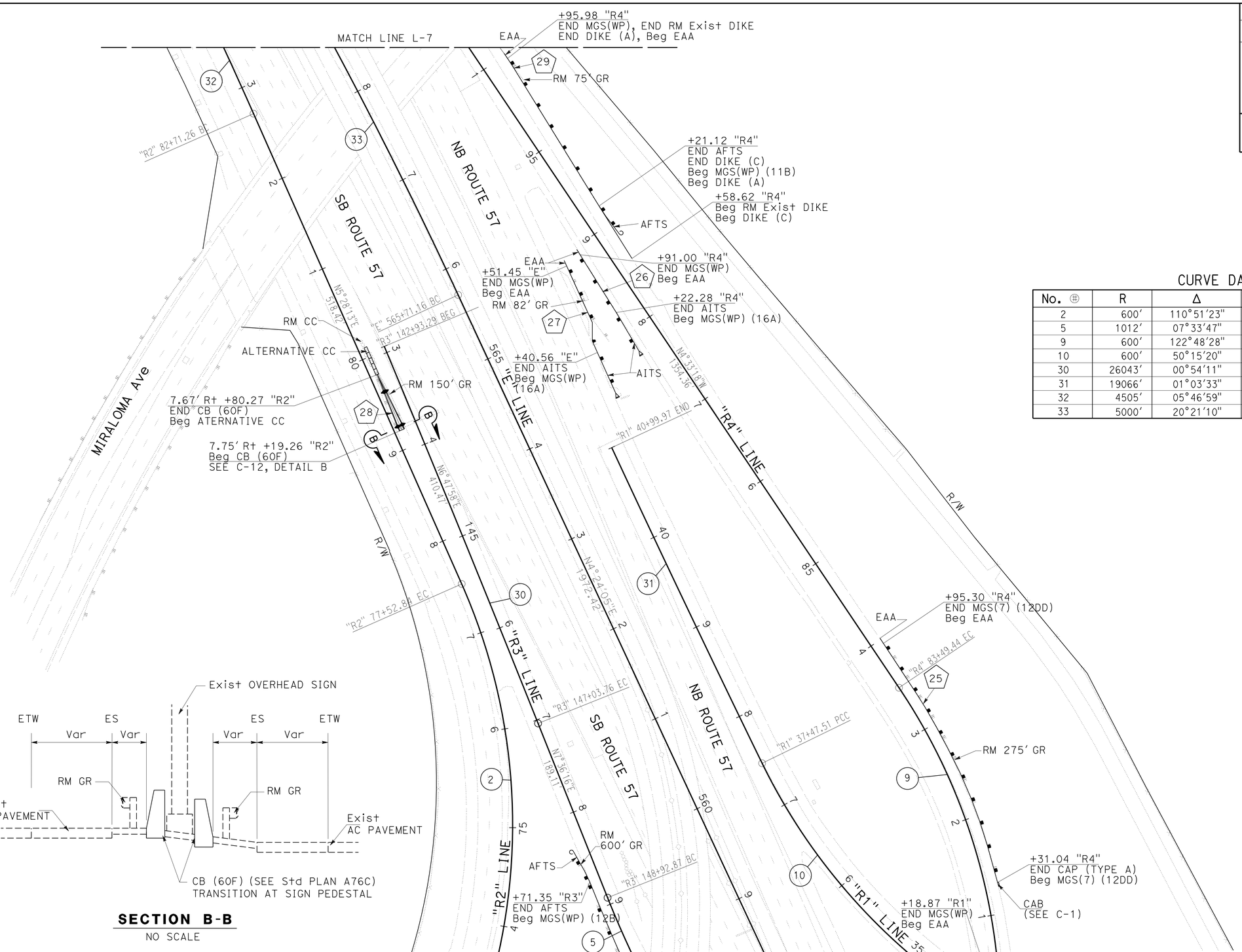


## CURVE DATA

| No. Ⓗ | R | Δ | T | L |
|---|---|---|---|---|
| 2 | 600′ | 110°51′23" | 870.67′ | 1160.89′ |
| 5 | 1012′ | 07°33′47" | 66.89′ | 133.58′ |
| 9 | 600′ | 122°48′28" | 1100.66′ | 1286.04′ |
| 10 | 600′ | 50°15′20" | 281.42′ | 526.27′ |
| 30 | 26043′ | 00°54′11" | 205.24′ | 410.47′ |
| 31 | 19066′ | 01°03′33" | 176.23′ | 352.45′ |
| 32 | 4505′ | 05°46′59" | 227.55′ | 454.70′ |
| 33 | 5000′ | 20°21′10" | 897.51′ | 1776.11′ |




**SECTION B-B**
NO SCALE

NOTE:
FOR ACCURATE RIGHT OF WAY DATA, CONTACT RIGHT OF WAY ENGINEERING AT THE DISTRICT OFFICE.

# LAYOUT
SCALE 1" = 50′

**L-6**

STATE OF CALIFORNIA - DEPARTMENT OF TRANSPORTATION
Caltrans® DESIGN DIVISION
FUNCTIONAL SUPERVISOR: MILI LIM STAMATION
CALCULATED-DESIGNED BY: KIMBERLY NGUYEN
CHECKED BY: RICK NGO
REVISED BY
DATE REVISED

LAST REVISION DATE PLOTTED => 30-AUG-2016
07-28-16 TIME PLOTTED => 14:20

| Dist | COUNTY | ROUTE | POST MILES TOTAL PROJECT | SHEET No. | TOTAL SHEETS |
|---|---|---|---|---|---|
| 12 | Ora | 55, 57, 91 | 17.5/17.9; 15.2/16.0 5.8/6.8; 8.7/R9.5 | 9 | 95 |

REGISTERED CIVIL ENGINEER 07-26-16 DATE

07-25-16
PLANS APPROVAL DATE

REGISTERED PROFESSIONAL ENGINEER KIMBERLY NGUYEN No. C 64577 Exp. 06/30/17 CIVIL STATE OF CALIFORNIA

*THE STATE OF CALIFORNIA OR ITS OFFICERS OR AGENTS SHALL NOT BE RESPONSIBLE FOR THE ACCURACY OR COMPLETENESS OF SCANNED COPIES OF THIS PLAN SHEET.*

**NOTE:**

FOR ACCURATE RIGHT OF WAY DATA, CONTACT RIGHT OF WAY ENGINEERING AT THE DISTRICT OFFICE.

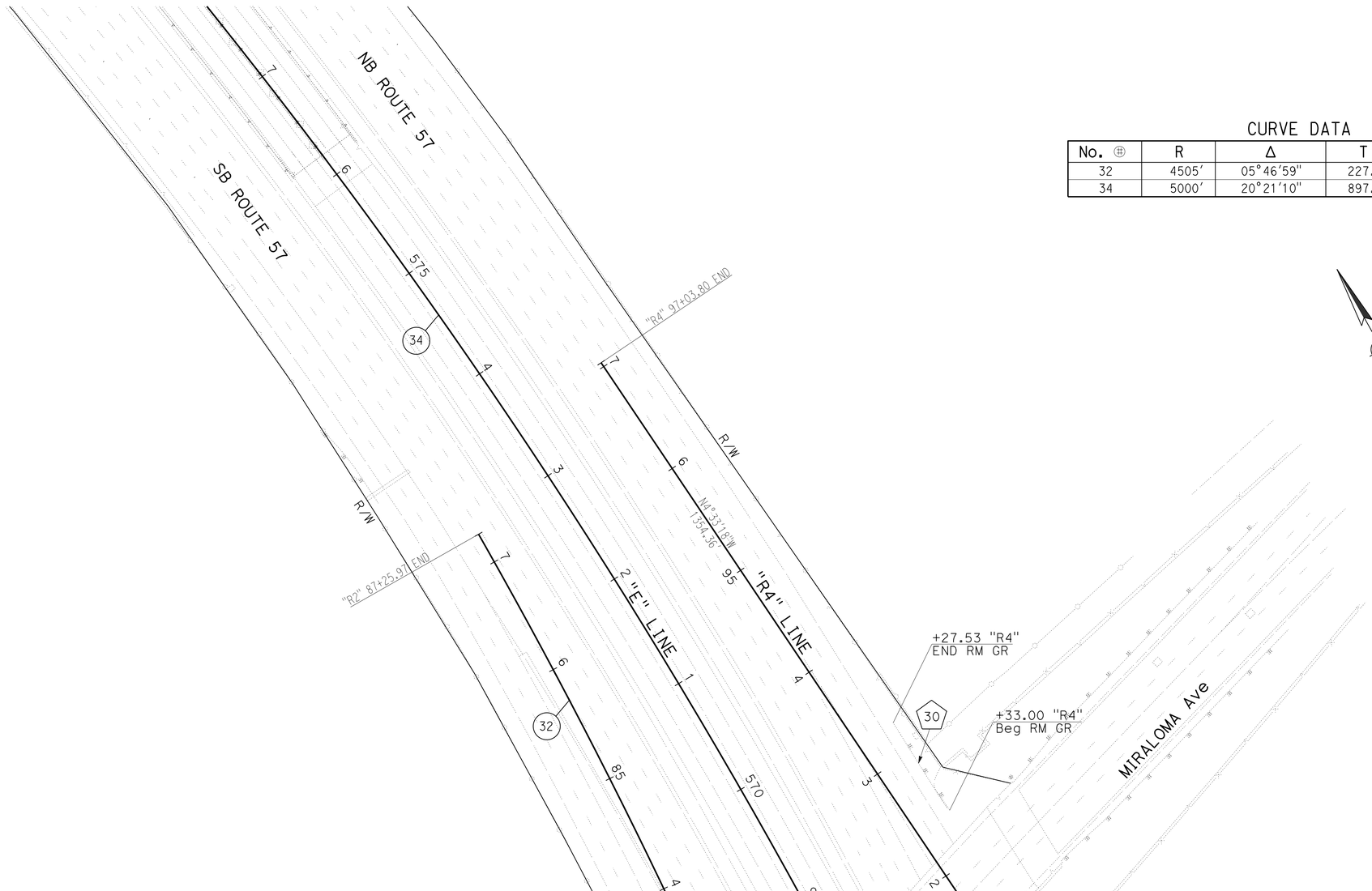


## CURVE DATA

| No. ⊕ | R | Δ | T | L |
|---|---|---|---|---|
| 32 | 4505′ | 05°46′59" | 227.55′ | 454.70′ |
| 34 | 5000′ | 20°21′10" | 897.51′ | 1776.11′ |

# LAYOUT

SCALE 1" = 50′

L-7

STATE OF CALIFORNIA - DEPARTMENT OF TRANSPORTATION
Caltrans® DESIGN DIVISION

FUNCTIONAL SUPERVISOR: MILI LIM STAMATION
CALCULATED-DESIGNED BY: KIMBERLY NGUYEN
CHECKED BY: RICK NGO
REVISED BY
DATE REVISED

LAST REVISION 07-28-16 | DATE PLOTTED => 30-AUG-2016 | TIME PLOTTED => 14:20

| Dist | COUNTY | ROUTE | POST MILES TOTAL PROJECT | SHEET No. | TOTAL SHEETS |
|---|---|---|---|---|---|
| 12 | Ora | 55, 57, 91 | 17.5/17.9; 15.2/16.0 5.8/6.8; 8.7/R9.5 | 10 | 95 |

REGISTERED CIVIL ENGINEER 07-26-16 DATE

07-25-16
PLANS APPROVAL DATE

REGISTERED PROFESSIONAL ENGINEER KIMBERLY NGUYEN No. C 64577 Exp. 06/30/17 CIVIL STATE OF CALIFORNIA

*THE STATE OF CALIFORNIA OR ITS OFFICERS OR AGENTS SHALL NOT BE RESPONSIBLE FOR THE ACCURACY OR COMPLETENESS OF SCANNED COPIES OF THIS PLAN SHEET.*

**NOTE:**

FOR ACCURATE RIGHT OF WAY DATA, CONTACT RIGHT OF WAY ENGINEERING AT THE DISTRICT OFFICE.

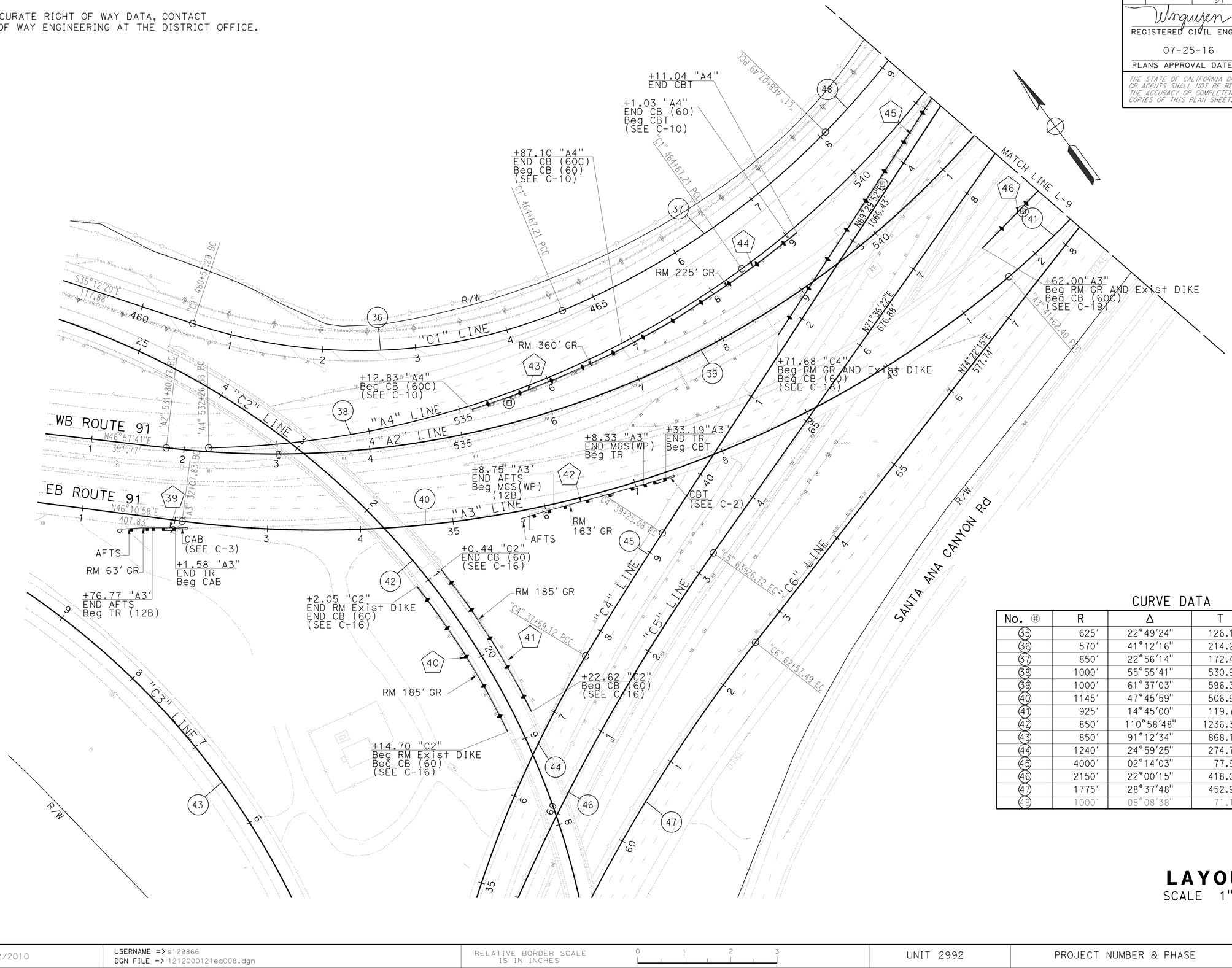


CURVE DATA

| No. | R | Δ | T | L |
|---|---|---|---|---|
| 35 | 625' | 22°49'24" | 126.15' | 248.96' |
| 36 | 570' | 41°12'16" | 214.27' | 409.92' |
| 37 | 850' | 22°56'14" | 172.45' | 340.28' |
| 38 | 1000' | 55°55'41" | 530.90' | 976.13' |
| 39 | 1000' | 61°37'03" | 596.33' | 1075.43' |
| 40 | 1145' | 47°45'59" | 506.99' | 954.57' |
| 41 | 925' | 14°45'00" | 119.73' | 238.13' |
| 42 | 850' | 110°58'48" | 1236.30' | 1646.42' |
| 43 | 850' | 91°12'34" | 868.13' | 1353.12' |
| 44 | 1240' | 24°59'25" | 274.79' | 540.84' |
| 45 | 4000' | 02°14'03" | 77.99' | 155.96' |
| 46 | 2150' | 22°00'15" | 418.00' | 825.70' |
| 47 | 1775' | 28°37'48" | 452.94' | 886.95' |
| 48 | 1000' | 08°08'38" | 71.19' | 142.14' |

# LAYOUT

SCALE 1" = 50'

L-8

STATE OF CALIFORNIA - DEPARTMENT OF TRANSPORTATION
Caltrans DESIGN DIVISION

FUNCTIONAL SUPERVISOR: MILI LIM STAMATION
CALCULATED-DESIGNED BY: KIMBERLY NGUYEN
CHECKED BY: RICK NGO
REVISED BY
DATE REVISED

LAST REVISION 07-28-16
DATE PLOTTED => 30-AUG-2016
TIME PLOTTED => 14:20

| Dist | COUNTY | ROUTE | POST MILES TOTAL PROJECT | SHEET No. | TOTAL SHEETS |
|---|---|---|---|---|---|
| 12 | Ora | 55, 57, 91 | 17.5/17.9; 15.2/16.0 5.8/6.8; 8.7/R9.5 | 11 | 95 |

REGISTERED CIVIL ENGINEER 07-26-16 DATE

07-25-16
PLANS APPROVAL DATE

REGISTERED PROFESSIONAL ENGINEER KIMBERLY NGUYEN No. C 64577 Exp. 06/30/17 CIVIL STATE OF CALIFORNIA

*THE STATE OF CALIFORNIA OR ITS OFFICERS OR AGENTS SHALL NOT BE RESPONSIBLE FOR THE ACCURACY OR COMPLETENESS OF SCANNED COPIES OF THIS PLAN SHEET.*

**NOTE:**

FOR ACCURATE RIGHT OF WAY DATA, CONTACT
RIGHT OF WAY ENGINEERING AT THE DISTRICT OFFICE.

CURVE DATA

| No. ⊕ | R | Δ | T | L |
|---|---|---|---|---|
| 38 | 1000′ | 55°55′41" | 530.90′ | 976.13′ |
| 39 | 1000′ | 61°37′03" | 596.33′ | 1075.43′ |
| 41 | 925′ | 14°45′00" | 119.73′ | 238.13′ |
| 48 | 1000′ | 08°08′38" | 71.19′ | 142.14′ |
| 49 | 5000′ | 04°58′49" | 217.44′ | 434.61′ |
| 50 | 19999′ | 00°34′39" | 100.80′ | 201.59′ |
| 51 | 26000′ | 00°55′54" | 211.39′ | 422.76′ |
| 52 | 3600′ | 07°56′52" | 250.09′ | 499.37′ |
| 53 | 2500′ | 10°42′45" | 234.39′ | 467.42′ |

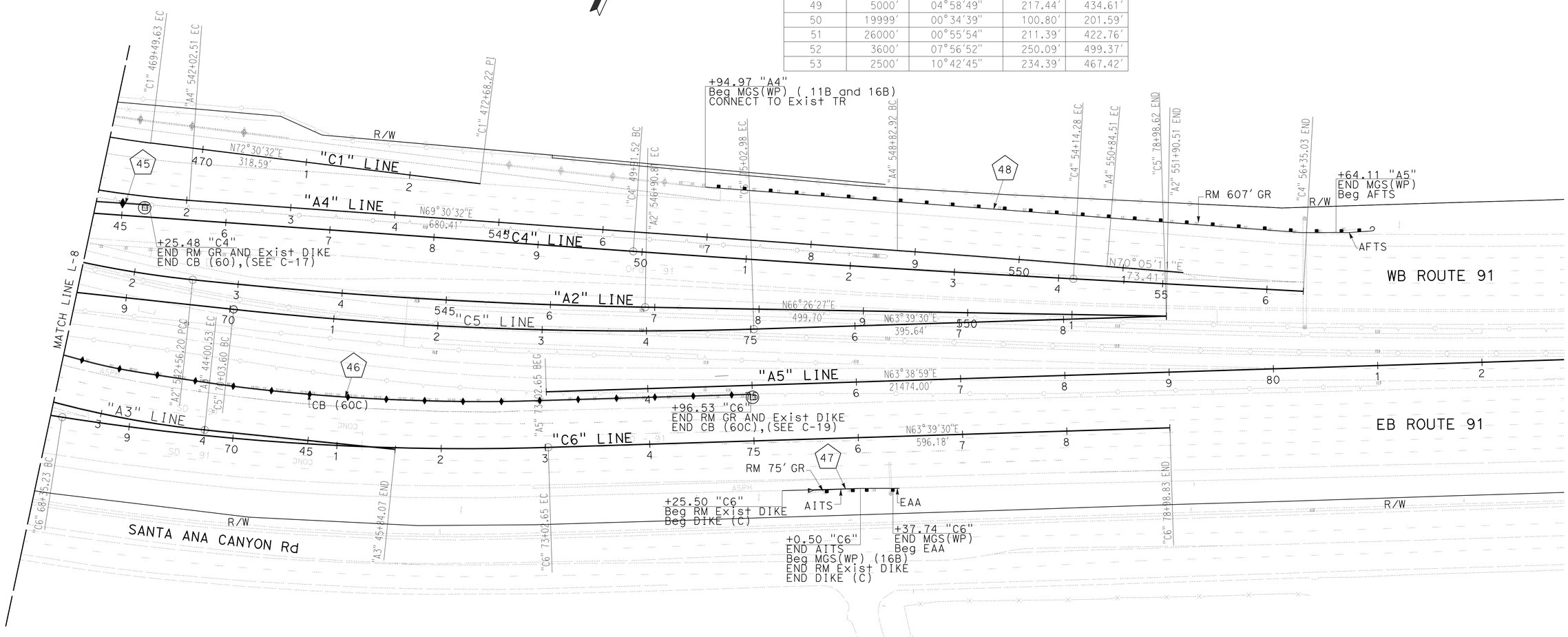


**LAYOUT**
SCALE 1" = 50′

**L-9**

STATE OF CALIFORNIA - DEPARTMENT OF TRANSPORTATION
Caltrans® **DESIGN DIVISION**

FUNCTIONAL SUPERVISOR: MILI LIM STAMATION
CALCULATED-DESIGNED BY: KIMBERLY NGUYEN
CHECKED BY: RICK NGO
REVISED BY
DATE REVISED

LAST REVISION 07-28-16
DATE PLOTTED => 30-AUG-2016
TIME PLOTTED => 14:20

| Dist | COUNTY | ROUTE | POST MILES TOTAL PROJECT | SHEET No. | TOTAL SHEETS |
|---|---|---|---|---|---|
| 12 | Ora | 55, 57, 91 | 17.5/17.9; 15.2/16.0 5.8/6.8; 8.7/R9.5 | 12 | 95 |

REGISTERED CIVIL ENGINEER 07-26-16 DATE

07-25-16
PLANS APPROVAL DATE

REGISTERED PROFESSIONAL ENGINEER KIMBERLY NGUYEN No. C 64577 Exp. 6/30/17 CIVIL STATE OF CALIFORNIA

*THE STATE OF CALIFORNIA OR ITS OFFICERS OR AGENTS SHALL NOT BE RESPONSIBLE FOR THE ACCURACY OR COMPLETENESS OF SCANNED COPIES OF THIS PLAN SHEET.*

NOTES:

1. See "ROADWAY PLANS" for work locations #4, 6, 10, 12, 22, and 25.
2. See Standard Plan A78F1 and A78F2 for more Detail Thrie Beam Brrier connections to Bridge Railing.
3. Holes used for fastening existing MBGR must be mortar filled, unless holes were cast using pipe sleeves.
4. Existing barrier heights vary. Where exist barrier height is more than 2'-8", transition barrier height to 2'-8" @ 4:1 slope.

LEGEND:

Indicates existing

Indicates new structure

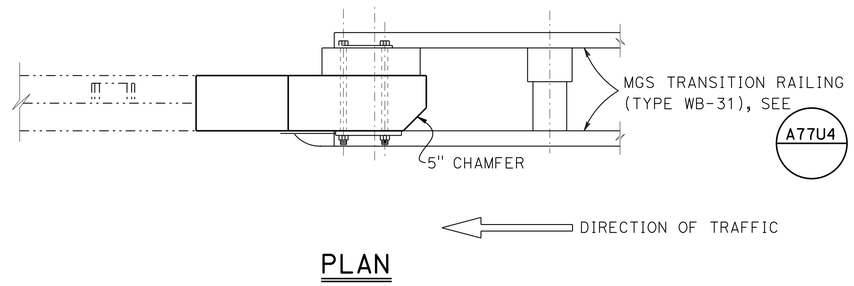


PLAN

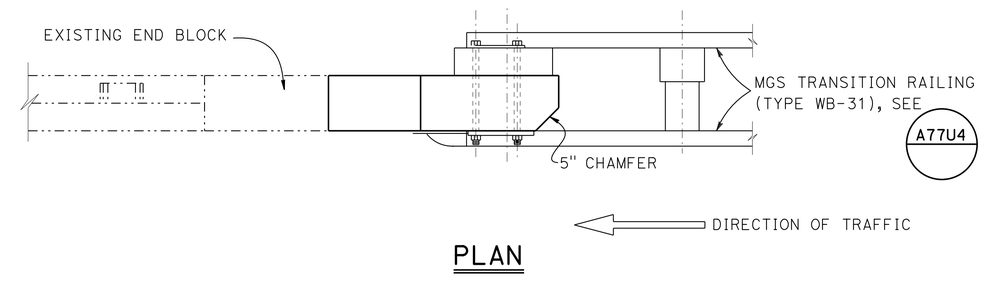


PLAN

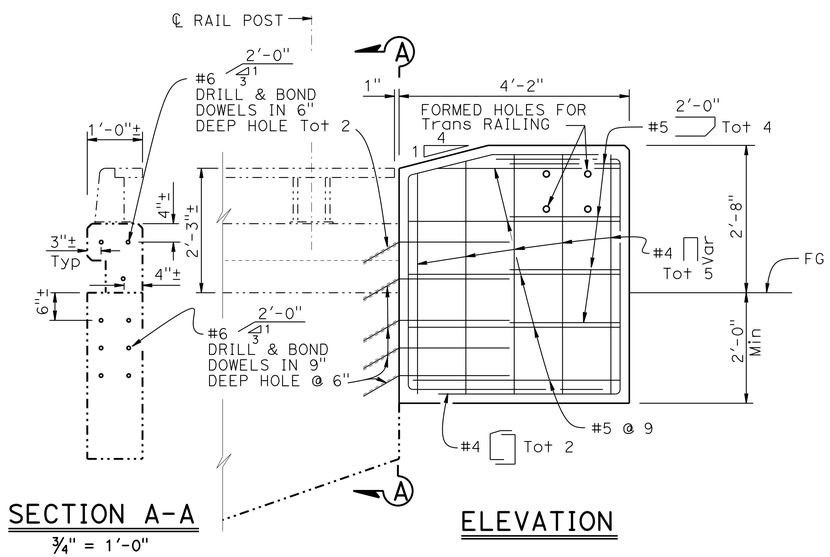


SECTION A-A
¾" = 1'-0"

ELEVATION

NO EXISTING END BLOCK

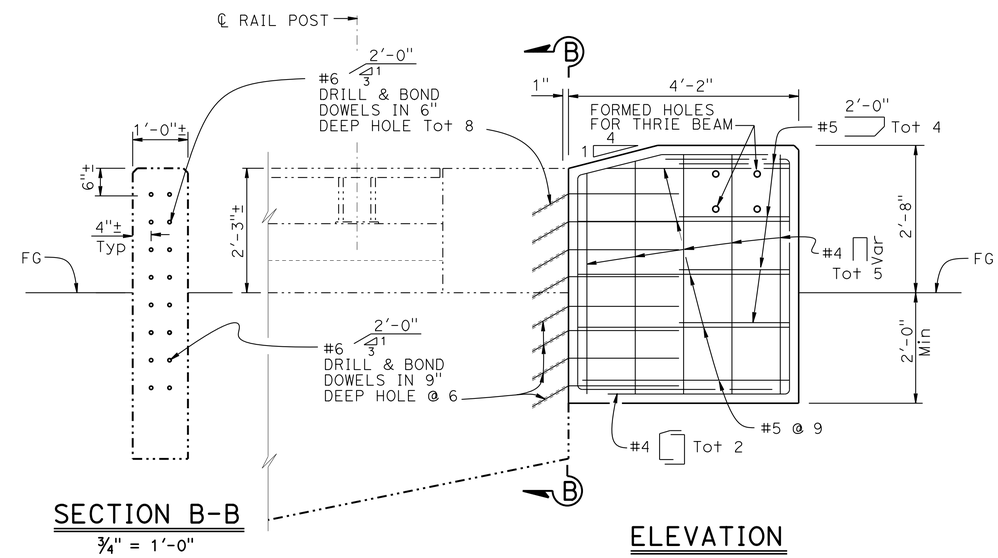


SECTION B-B
¾" = 1'-0"

ELEVATION

EXISTING END BLOCK

NOTE:
THE CONTRACTOR MUST VERIFY ALL CONTROLLING FIELD DIMENSIONS BEFORE ORDERING OR FABRICATING ANY MATERIAL.

## TRANSITION RAILING (TYPE WB-31) CONNECTION TO EXISTING CONCRETE BARRIER (TYPE 9)

## CONSTRUCTION DETAILS
NO SCALE

C-1

STATE OF CALIFORNIA - DEPARTMENT OF TRANSPORTATION
Caltrans® DESIGN DIVISION

FUNCTIONAL SUPERVISOR: MILI LIM STAMATION
CALCULATED-DESIGNED BY: KIMBERLY NGUYEN
CHECKED BY: MILI LIM STAMATION
REVISED BY / DATE REVISED

LAST REVISION 07-28-16
DATE PLOTTED => 30-AUG-2016
TIME PLOTTED => 14:20

| Dist | COUNTY | ROUTE | POST MILES TOTAL PROJECT | SHEET No. | TOTAL SHEETS |
|---|---|---|---|---|---|
| 12 | Ora | 55, 57, 91 | 17.5/17.9; 15.2/16.0 5.8/6.8; 8.7/R9.5 | 13 | 95 |

REGISTERED CIVIL ENGINEER 07-26-16 DATE

07-25-16
PLANS APPROVAL DATE

REGISTERED PROFESSIONAL ENGINEER KIMBERLY NGUYEN No. C 64577 Exp. 6/30/17 CIVIL STATE OF CALIFORNIA

*THE STATE OF CALIFORNIA OR ITS OFFICERS OR AGENTS SHALL NOT BE RESPONSIBLE FOR THE ACCURACY OR COMPLETENESS OF SCANNED COPIES OF THIS PLAN SHEET.*

NOTES:

1. See "ROADWAY PLANS" for work location #42.
2. See Standard Plan A78F1 and A78F2 for more Detail Thrie Beam Brrier connections to Bridge Railing.
3. Holes used for fastening existing MBGR must be mortar filled, unless holes were cast using pipe sleeves.
4. Existing barrier heights vary. Where exist barrier height is more than 2'-8", transition barrier height to 2'-8" @ 4:1 slope.

LEGEND:

Indicates existing

Indicates new structure

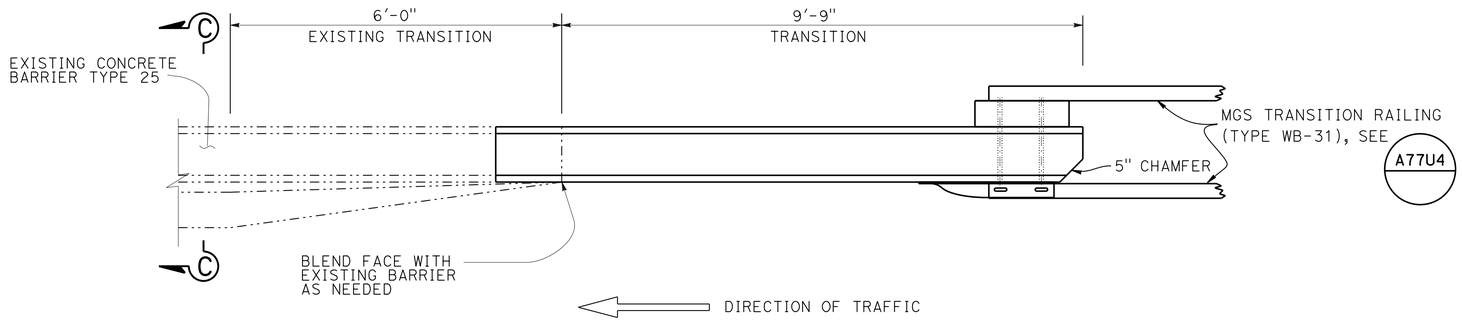


PLAN

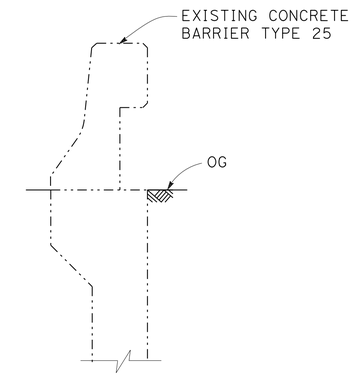


SECTION C-C

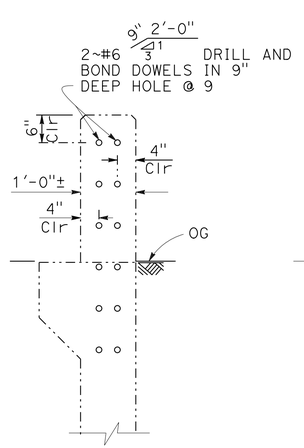


SECTION A-A

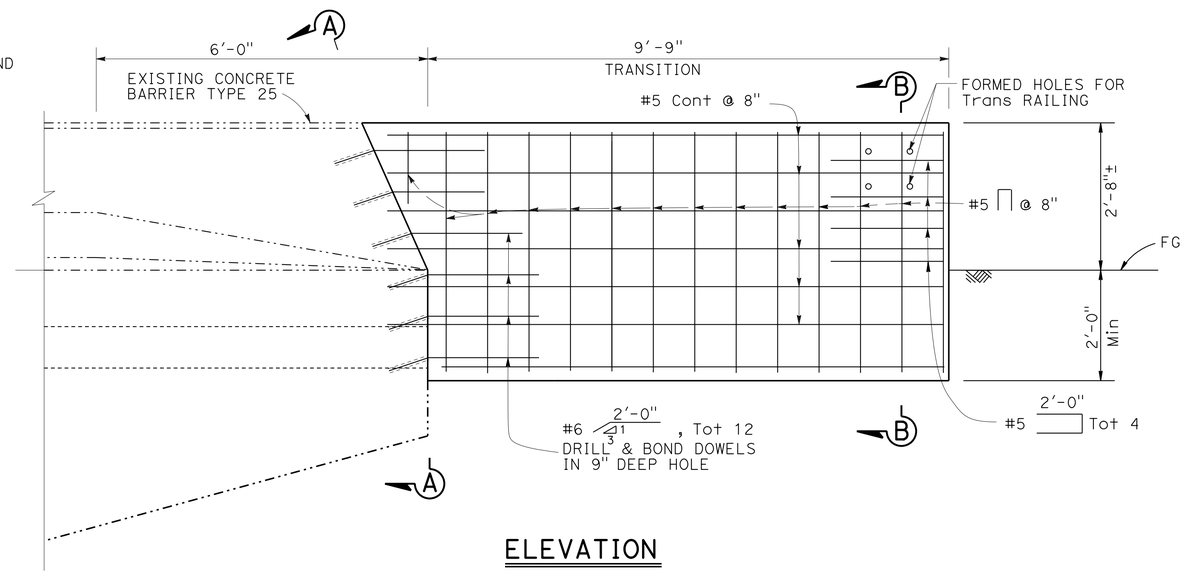


ELEVATION

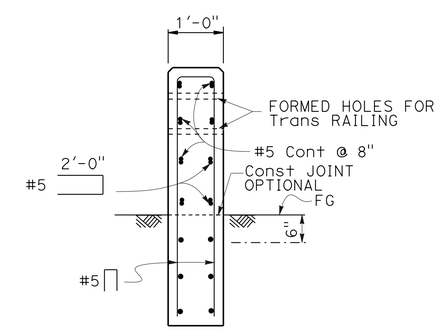


NOTE:
Thrie Beam not shown

SECTION B-B

NOTE:
THE CONTRACTOR MUST VERIFY ALL CONTROLLING FIELD DIMENSIONS BEFORE ORDERING OR FABRICATING ANY MATERIAL.

## TRANSITION RAILING (TYPE WB-31) CONNECTION TO EXISTING CONCRETE BARRIER (TYPE 25)

## CONSTRUCTION DETAILS

NO SCALE

C-2

STATE OF CALIFORNIA - DEPARTMENT OF TRANSPORTATION
Caltrans DESIGN DIVISION

FUNCTIONAL SUPERVISOR: MILI LIM STAMATION
CALCULATED-DESIGNED BY: KIMBERLY NGUYEN
CHECKED BY: MILI LIM STAMATION
REVISED BY
DATE REVISED

LAST REVISION 07-28-16 | DATE PLOTTED => 30-AUG-2016 | TIME PLOTTED => 14:21

| Dist | COUNTY | ROUTE | POST MILES TOTAL PROJECT | SHEET No. | TOTAL SHEETS |
|---|---|---|---|---|---|
| 12 | Ora | 55, 57, 91 | 17.5/17.9; 15.2/16.0 5.8/6.8; 8.7/R9.5 | 14 | 95 |

REGISTERED CIVIL ENGINEER 07-26-16 DATE

07-25-16
PLANS APPROVAL DATE

REGISTERED PROFESSIONAL ENGINEER KIMBERLY NGUYEN No. C 64577 Exp. 6/30/17 CIVIL STATE OF CALIFORNIA

*THE STATE OF CALIFORNIA OR ITS OFFICERS OR AGENTS SHALL NOT BE RESPONSIBLE FOR THE ACCURACY OR COMPLETENESS OF SCANNED COPIES OF THIS PLAN SHEET.*

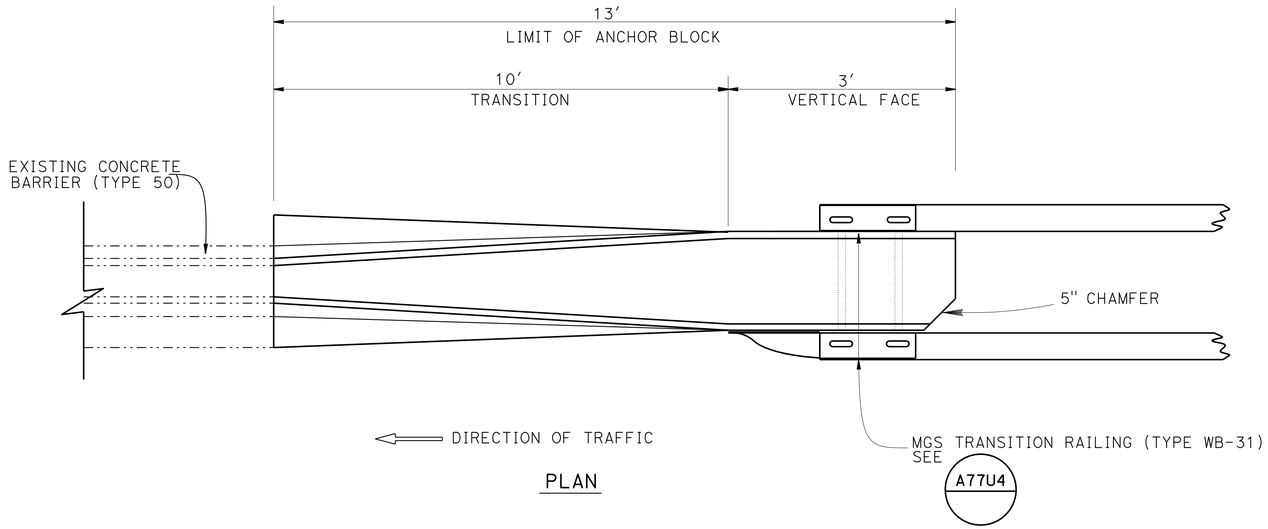


PLAN

LEGEND:

Indicates existing

Indicates new structure

NOTES:

1. See "ROADWAY PLANS" for work locations #1, 3, 32, and 39.
2. Holes used for fastening existing MBGR must be mortar filled, unless holes were cast using pipe sleeves.
3. Existing barrier heights vary. Where exist barrier height is more than 2'-8", transition barrier height to 2'-8" @ 4:1 slope.

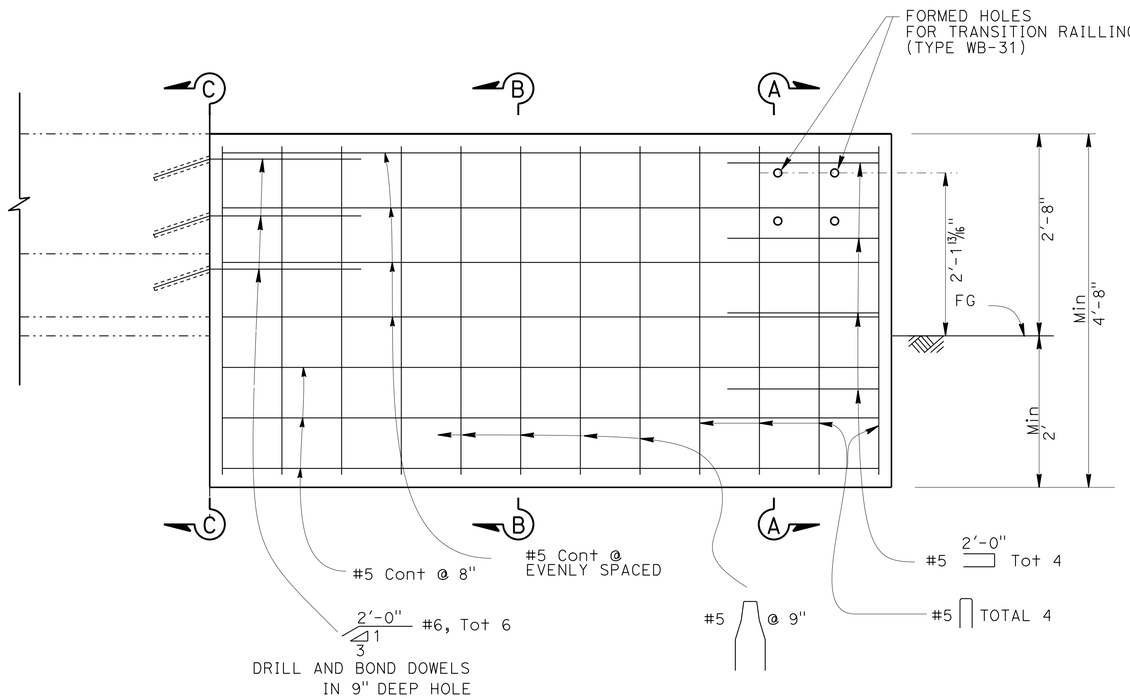


ELEVATION

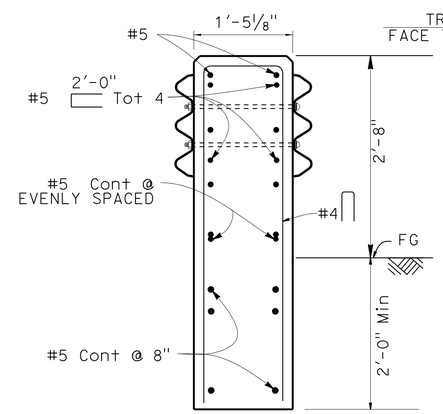


SECTION A-A

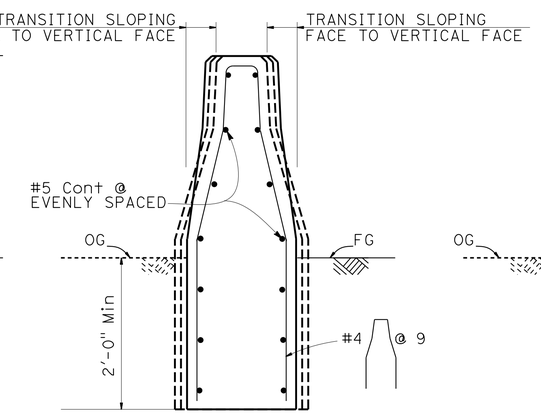


SECTION B-B

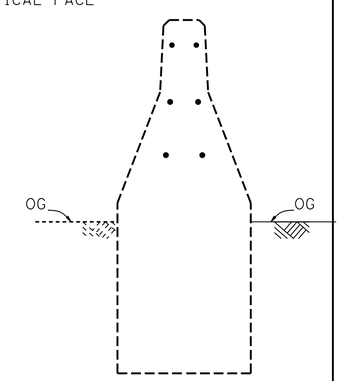


SECTION C-C

THE CONTRACTOR MUST VERIFY ALL CONTROLLING FIELD DIMENSIONS BEFORE ORDERING OR FABRICATING ANY MATERIAL.

## TRANSITION RAILING (TYPE WB-31) CONNECTION TO EXISTING CONCRETE BARRIER (TYPE 50)

## CONSTRUCTION DETAILS

NO SCALE

C-3

STATE OF CALIFORNIA - DEPARTMENT OF TRANSPORTATION
Caltrans DESIGN DIVISION

FUNCTIONAL SUPERVISOR: MILI LIM STAMATION
CALCULATED-DESIGNED BY: KIMBERLY NGUYEN
CHECKED BY: MILI LIM STAMATION
REVISED BY / DATE REVISED

LAST REVISION 07-28-16
DATE PLOTTED => 30-AUG-2016
TIME PLOTTED => 14:21

| Dist | COUNTY | ROUTE | POST MILES TOTAL PROJECT | SHEET No. | TOTAL SHEETS |
|---|---|---|---|---|---|
| 12 | Ora | 55, 57, 91 | 17.5/17.9; 15.2/16.0 5.8/6.8; 8.7/R9.5 | 15 | 95 |

REGISTERED CIVIL ENGINEER 07-26-16 DATE

07-25-16
PLANS APPROVAL DATE

REGISTERED PROFESSIONAL ENGINEER KIMBERLY NGUYEN No. C 64577 Exp. 6/30/17 CIVIL STATE OF CALIFORNIA

*THE STATE OF CALIFORNIA OR ITS OFFICERS OR AGENTS SHALL NOT BE RESPONSIBLE FOR THE ACCURACY OR COMPLETENESS OF SCANNED COPIES OF THIS PLAN SHEET.*

NOTES:

1. See "ROADWAY PLANS" for work location #8.
2. See Standard Plan A76D and A76E for more Detail of Concrete Barrier Type 60G.

LEGEND:

Indicates existing

Indicates new structure

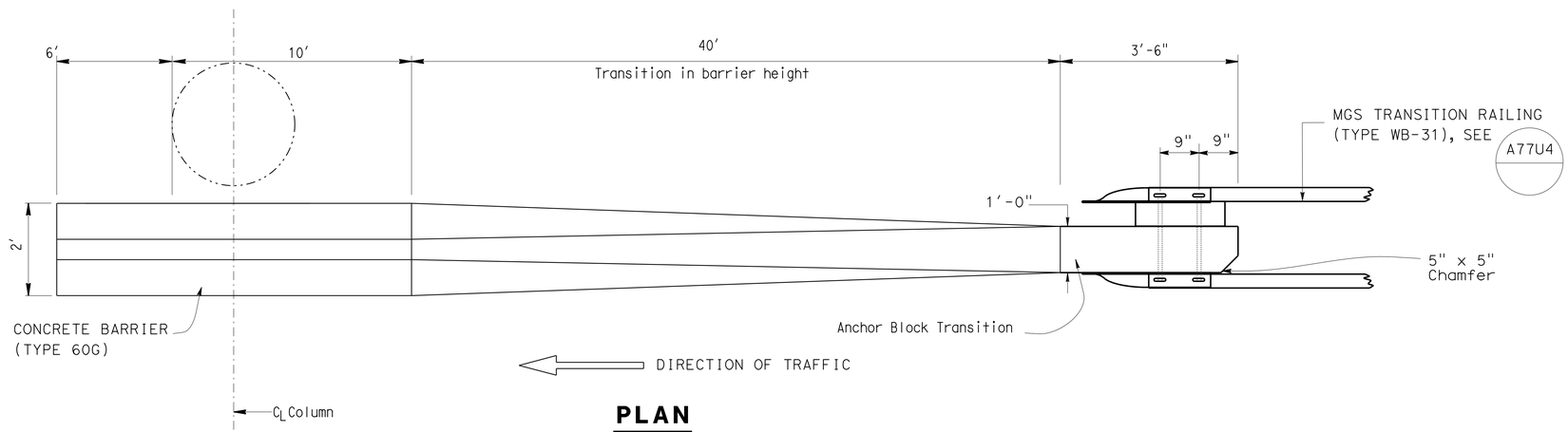


**PLAN**

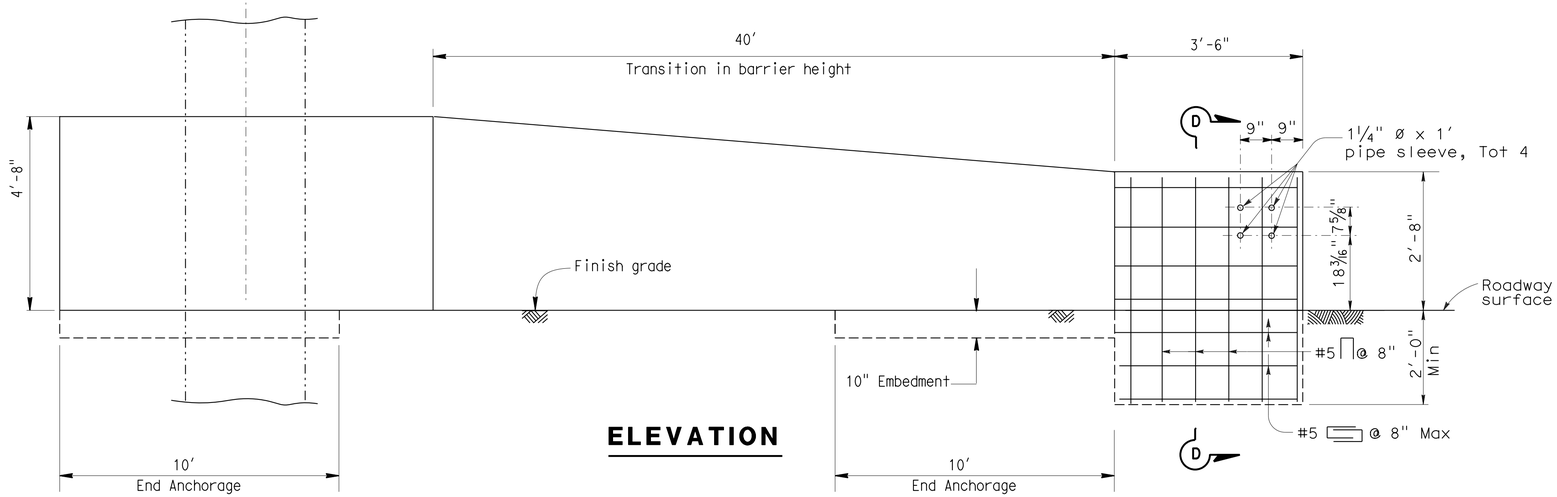


**ELEVATION**

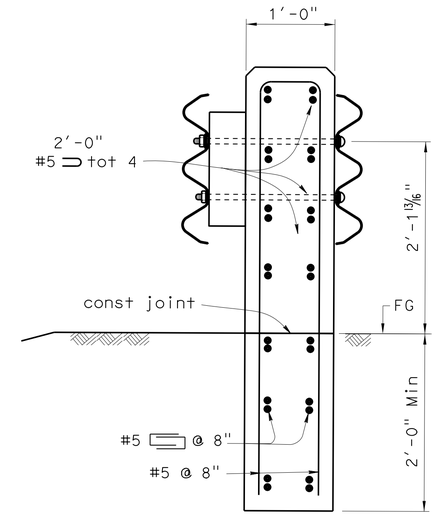


**SECTION D-D**

**CONCRETE BARRIER TYPE 60G**

THE CONTRACTOR MUST VERIFY ALL CONTROLLING FIELD DIMENSIONS BEFORE ORDERING OR FABRICATING ANY MATERIAL.

# CONSTRUCTION DETAILS

NO SCALE

C-4

STATE OF CALIFORNIA - DEPARTMENT OF TRANSPORTATION
Caltrans® DESIGN DIVISION

FUNCTIONAL SUPERVISOR: MILI LIM STAMATION
CALCULATED-DESIGNED BY: KIMBERLY NGUYEN
CHECKED BY: MILI LIM STAMATION
REVISED BY
DATE REVISED

LAST REVISION 07-28-16
DATE PLOTTED => 30-AUG-2016
TIME PLOTTED => 14:21

| Dist | COUNTY | ROUTE | POST MILES TOTAL PROJECT | SHEET No. | TOTAL SHEETS |
|---|---|---|---|---|---|
| 12 | Ora | 55, 57, 91 | 17.5/17.9; 15.2/16.0 5.8/6.8; 8.7/R9.5 | 16 | 95 |

REGISTERED CIVIL ENGINEER 07-26-16 DATE

07-25-16
PLANS APPROVAL DATE

REGISTERED PROFESSIONAL ENGINEER KIMBERLY NGUYEN No. C 64577 Exp. 6/30/17 CIVIL STATE OF CALIFORNIA

*THE STATE OF CALIFORNIA OR ITS OFFICERS OR AGENTS SHALL NOT BE RESPONSIBLE FOR THE ACCURACY OR COMPLETENESS OF SCANNED COPIES OF THIS PLAN SHEET.*

NOTES:

1. See "ROADWAY PLANS" for work location #17.
2. Holes used for fastening existing MBGR must be mortar filled, unless holes were cast using pipe sleeves.
3. Existing barrier heights vary. Where exist barrier height is more than 2'-8", transition barrier height to 2'-8" @ 4:1 slope.

LEGEND:

Indicates Existing

Indicates new structure

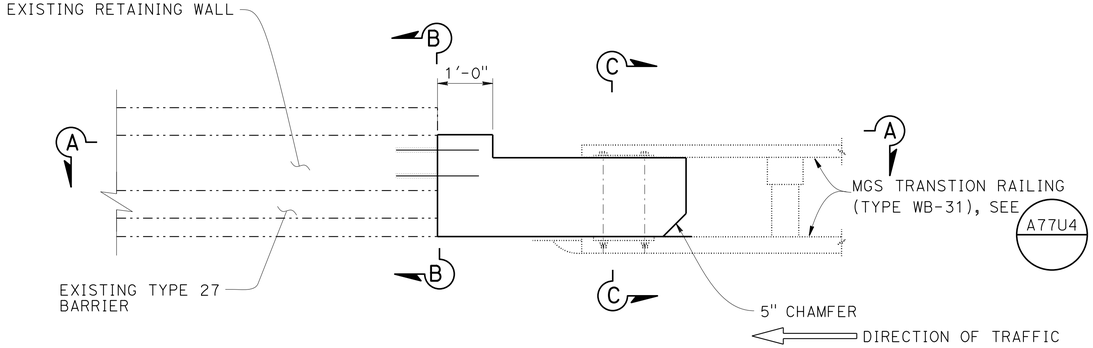


PLAN

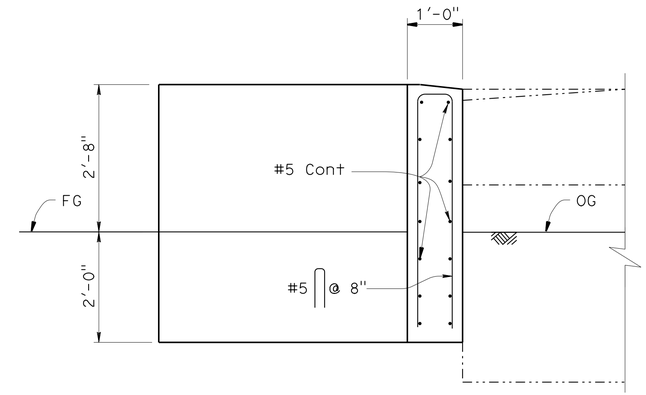


SECTION A-A

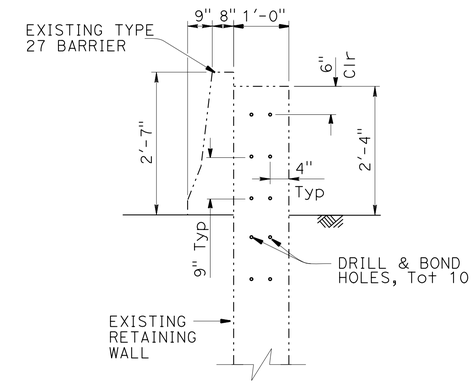


SECTION B-B

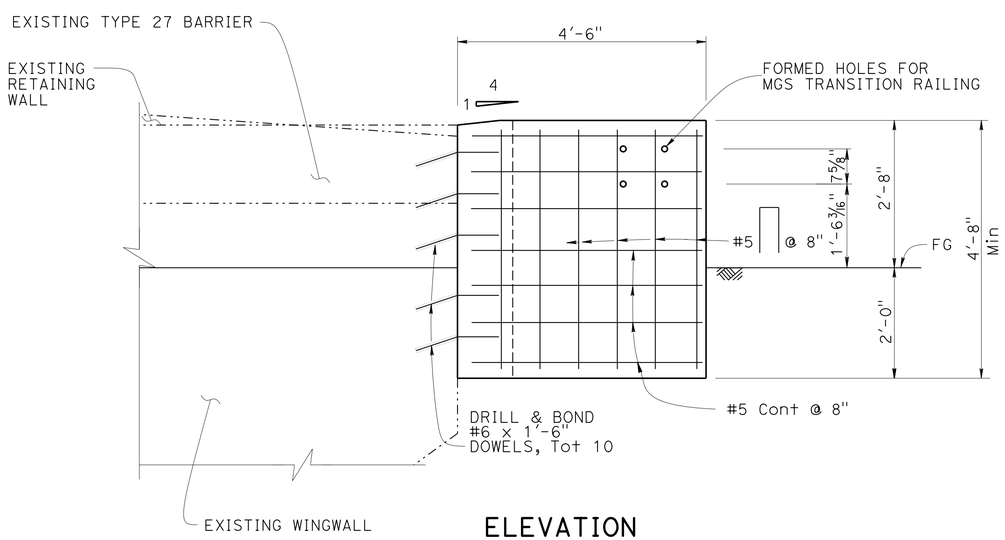


ELEVATION

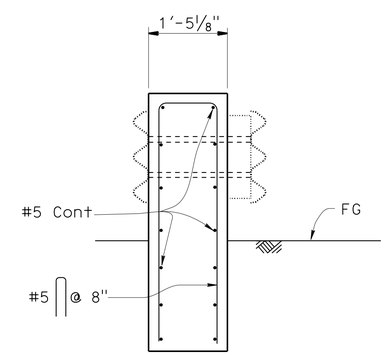


SECTION C-C

THE CONTRACTOR MUST VERIFY ALL CONTROLLING FIELD DIMENSIONS BEFORE ORDERING OR FABRICATING ANY MATERIAL.

## TRANSITION RAILING (TYPE WB-31) CONNECTION TO EXISTING RETAINING WALL WITH FRONT LAYER BARRIER

## CONSTRUCTION DETAILS

NO SCALE

C-5

REVISED BY | DATE REVISED
KIMBERLY NGUYEN | MILI LIM STAMATION
CALCULATED-DESIGNED BY | CHECKED BY
FUNCTIONAL SUPERVISOR | MILI LIM STAMATION
STATE OF CALIFORNIA - DEPARTMENT OF TRANSPORTATION
Caltrans DESIGN DIVISION

LAST REVISION 07-28-16 | DATE PLOTTED => 30-AUG-2016 | TIME PLOTTED => 14:21

| Dist | COUNTY | ROUTE | POST MILES TOTAL PROJECT | SHEET No. | TOTAL SHEETS |
|---|---|---|---|---|---|
| 12 | Ora | 55, 57, 91 | 17.5/17.9; 15.2/16.0 5.8/6.8; 8.7/R9.5 | 17 | 95 |

REGISTERED CIVIL ENGINEER DATE 07-26-16

07-25-16
PLANS APPROVAL DATE

REGISTERED PROFESSIONAL ENGINEER KIMBERLY NGUYEN No. C 64577 Exp. 6/30/17 CIVIL STATE OF CALIFORNIA

*THE STATE OF CALIFORNIA OR ITS OFFICERS OR AGENTS SHALL NOT BE RESPONSIBLE FOR THE ACCURACY OR COMPLETENESS OF SCANNED COPIES OF THIS PLAN SHEET.*

**NOTES:**

1. See "ROADWAY PLANS" for work location #20.
2. Holes used for fastening existing MBGR must be mortar filled, unless holes were cast using pipe sleeves.
3. Existing barrier heights vary. Where exist barrier height is more than 2'-8", transition barrier height to 2'-8" @ 4:1 slope.

**LEGEND:**

Indicates existing

Indicates new structure

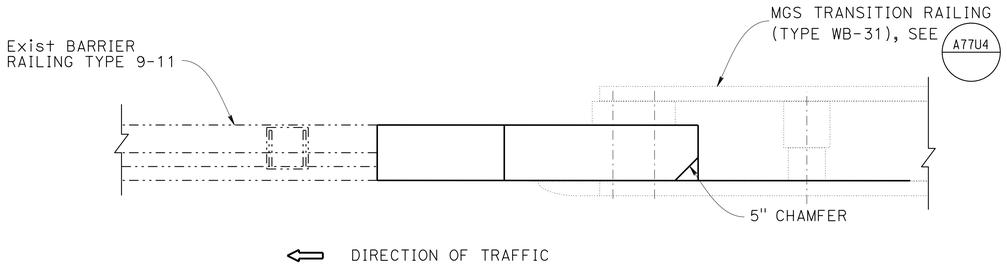


PLAN

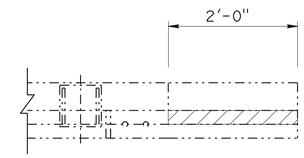


PLAN

REMOVE EXISTING TYPE 9-11 BARRIER RAILING

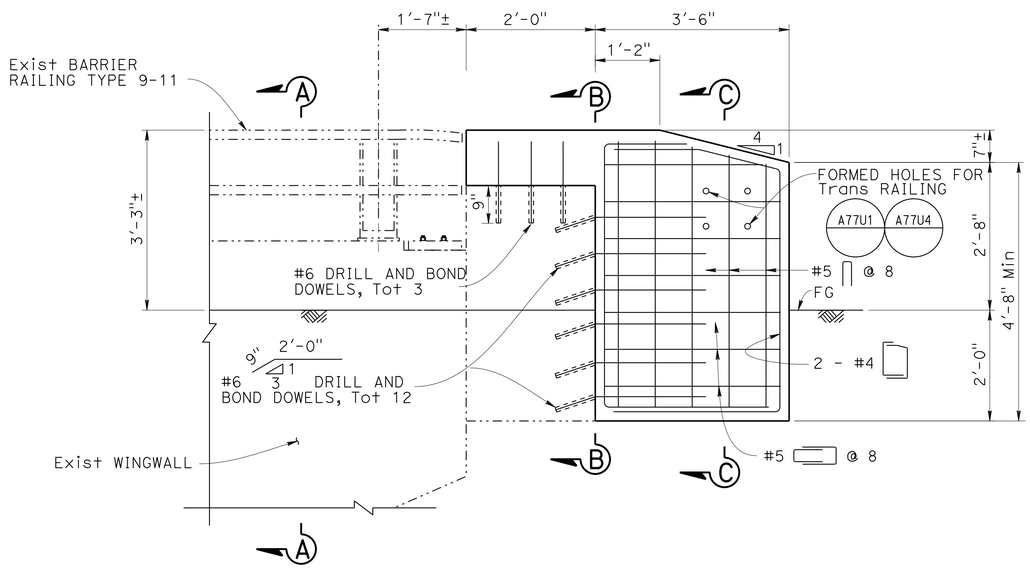


ELEVATION

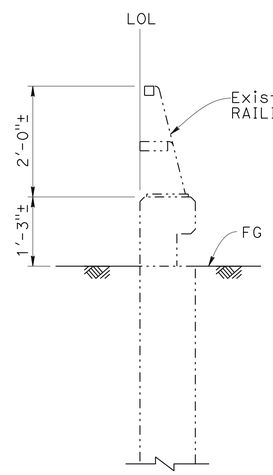


SECTION A-A

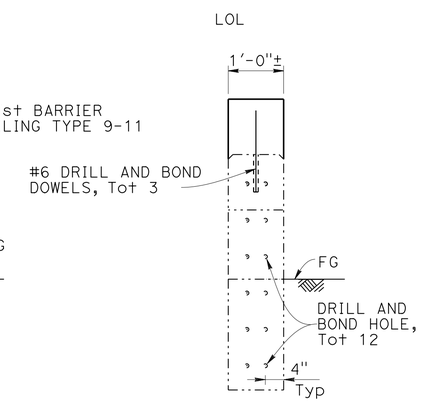


SECTION B-B

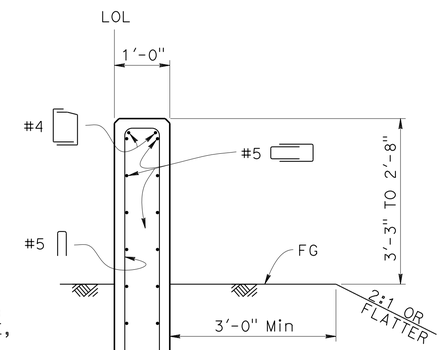


SECTION C-C

THE CONTRACTOR MUST VERIFY ALL CONTROLLING FIELD DIMENSIONS BEFORE ORDERING OR FABRICATING ANY MATERIAL.

**TRANSITION RAILING (TYPE WB-31) CONNECTION TO EXISTING CONCRETE BARRIER (TYPE 9-11)**

**CONSTRUCTION DETAILS**
NO SCALE

C-6

STATE OF CALIFORNIA - DEPARTMENT OF TRANSPORTATION
Caltrans® DESIGN DIVISION

FUNCTIONAL SUPERVISOR: MILI LIM STAMATION
CALCULATED-DESIGNED BY: KIMBERLY NGUYEN
CHECKED BY: MILI LIM STAMATION
REVISED BY / DATE REVISED

LAST REVISION 07-28-16
DATE PLOTTED => 30-AUG-2016
TIME PLOTTED => 14:21

| Dist | COUNTY | ROUTE | POST MILES TOTAL PROJECT | SHEET No. | TOTAL SHEETS |
|---|---|---|---|---|---|
| 12 | Ora | 55, 57, 91 | 17.5/17.9; 15.2/16.0 5.8/6.8; 8.7/R9.5 | 18 | 95 |

REGISTERED CIVIL ENGINEER 07-26-16 DATE

07-25-16
PLANS APPROVAL DATE

REGISTERED PROFESSIONAL ENGINEER KIMBERLY NGUYEN No. C 64577 Exp. 6/30/17 CIVIL STATE OF CALIFORNIA

*THE STATE OF CALIFORNIA OR ITS OFFICERS OR AGENTS SHALL NOT BE RESPONSIBLE FOR THE ACCURACY OR COMPLETENESS OF SCANNED COPIES OF THIS PLAN SHEET.*

NOTES:

1. See "ROADWAY PLANS" for work location #35.
2. The alignment of the Stand Alone Concrete barrier transition must follow that of existing MBGR.

LEGEND:

—·—·—·— Indicates existing

———— Indicates new structure

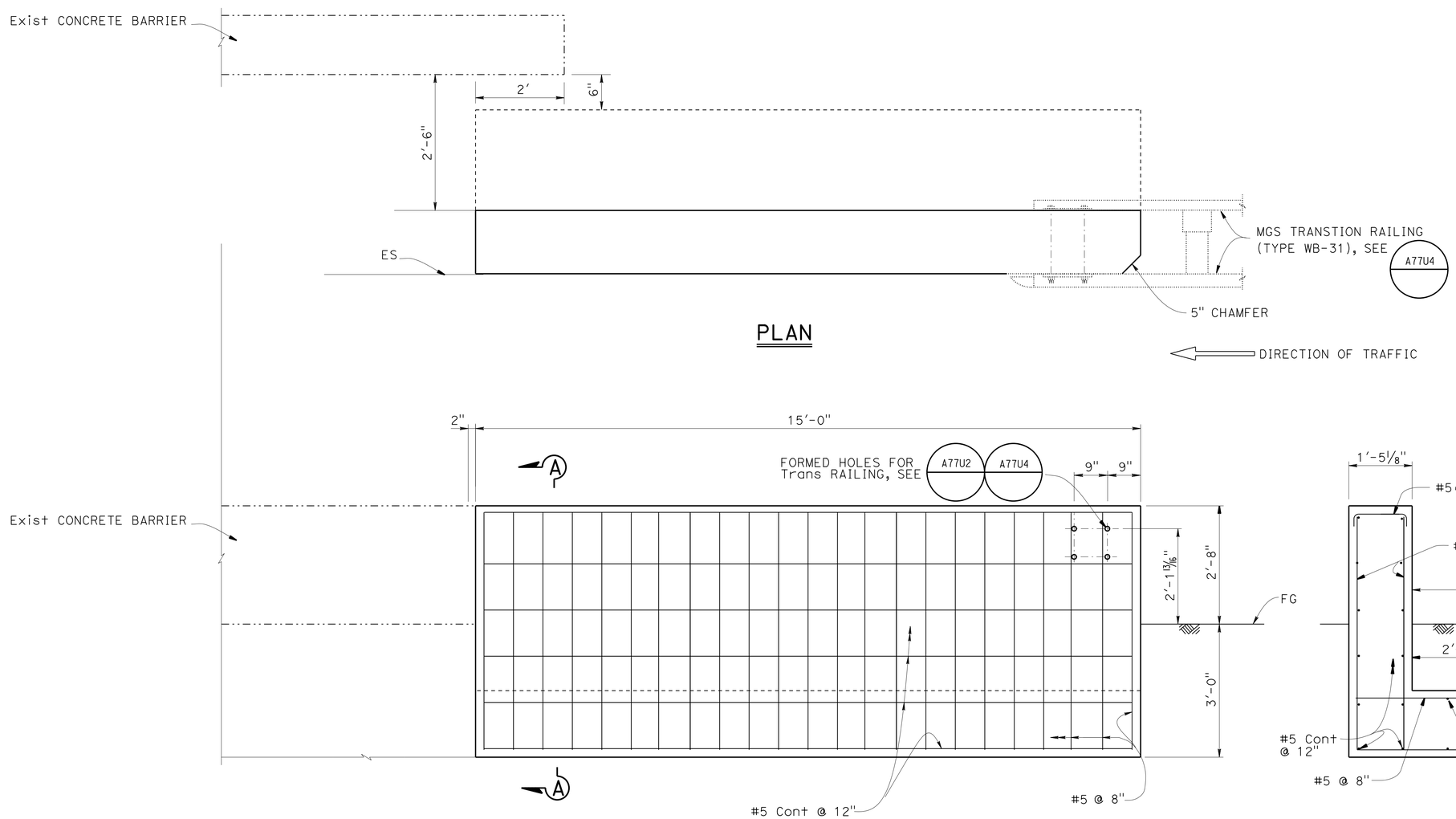


THE CONTRACTOR MUST VERIFY ALL CONTROLLING FIELD DIMENSIONS BEFORE ORDERING OR FABRICATING ANY MATERIAL.

## STAND ALONE CONCRETE BARRIER TRANSITION

## CONSTRUCTION DETAILS

NO SCALE

C-7

STATE OF CALIFORNIA - DEPARTMENT OF TRANSPORTATION
Caltrans DESIGN DIVISION

FUNCTIONAL SUPERVISOR: MILI LIM STAMATION
CALCULATED-DESIGNED BY: KIMBERLY NGUYEN
CHECKED BY: MILI LIM STAMATION
REVISED BY / DATE REVISED

LAST REVISION 07-28-16
DATE PLOTTED => 30-AUG-2016
TIME PLOTTED => 14:21

| Dist | COUNTY | ROUTE | POST MILES TOTAL PROJECT | SHEET No. | TOTAL SHEETS |
|---|---|---|---|---|---|
| 12 | Ora | 55, 57, 91 | 17.5/17.9; 15.2/16.0 5.8/6.8; 8.7/R9.5 | 19 | 95 |

kwnguyen 07-26-16
REGISTERED CIVIL ENGINEER DATE

07-25-16
PLANS APPROVAL DATE

REGISTERED PROFESSIONAL ENGINEER KIMBERLY NGUYEN No. C 64577 Exp. 6/30/17 CIVIL STATE OF CALIFORNIA

*THE STATE OF CALIFORNIA OR ITS OFFICERS OR AGENTS SHALL NOT BE RESPONSIBLE FOR THE ACCURACY OR COMPLETENESS OF SCANNED COPIES OF THIS PLAN SHEET.*

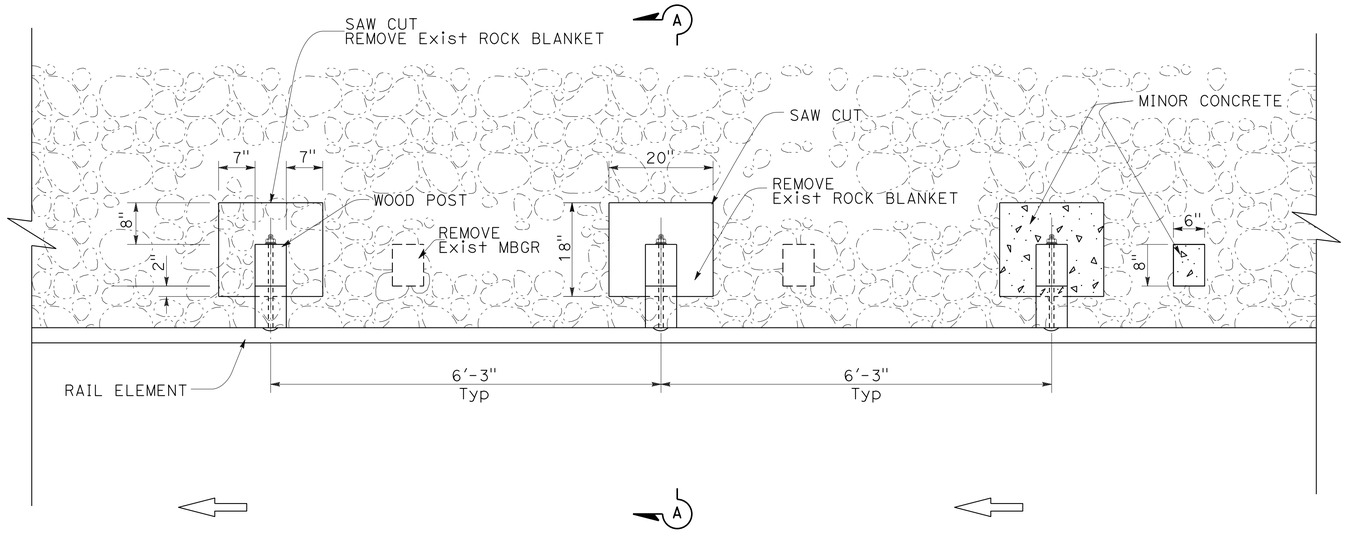


PLAN

LEGEND:

-·-·-·-·- Indicates existing

——— Indicates new

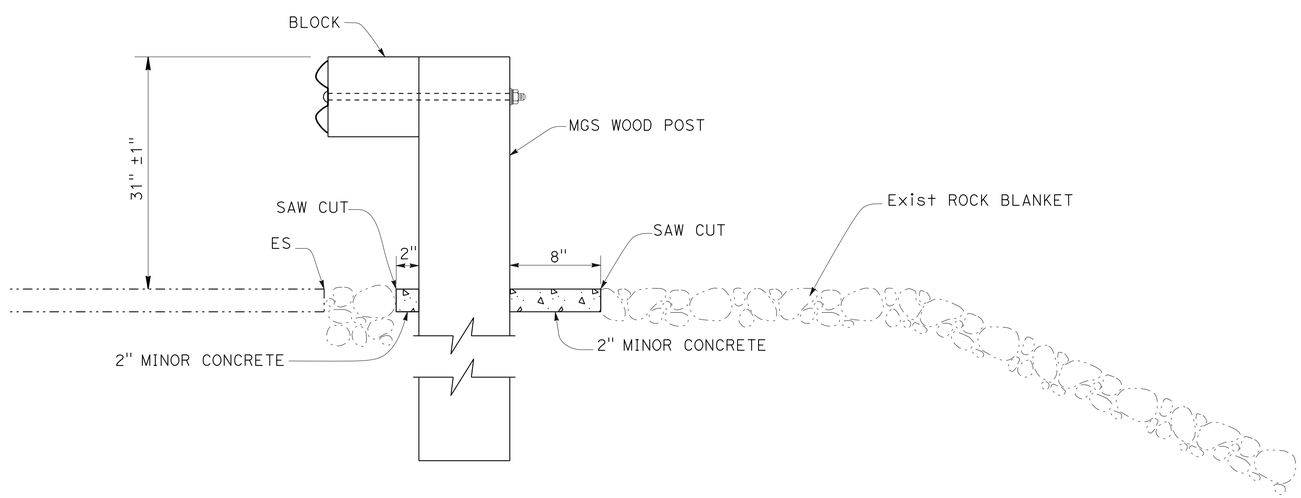


SECTION A-A

## MIDWEST GUARDRAIL WITHIN EXISTING ROCK BLANKET

## CONSTRUCTION DETAILS
NO SCALE

C-8

STATE OF CALIFORNIA - DEPARTMENT OF TRANSPORTATION
Caltrans DESIGN DIVISION

FUNCTIONAL SUPERVISOR: MILI LIM STAMATION
CALCULATED-DESIGNED BY: KIMBERLY NGUYEN
CHECKED BY: MILI LIM STAMATION
REVISED BY
DATE REVISED

LAST REVISION 07-28-16
DATE PLOTTED => 30-AUG-2016
TIME PLOTTED => 14:21

| Dist | COUNTY | ROUTE | POST MILES TOTAL PROJECT | SHEET No. | TOTAL SHEETS |
|---|---|---|---|---|---|
| 12 | Ora | 55, 57, 91 | 17.5/17.9; 15.2/16.0 5.8/6.8; 8.7/R9.5 | 20 | 95 |

kNguyen 07-26-16
REGISTERED CIVIL ENGINEER DATE

07-25-16
PLANS APPROVAL DATE

REGISTERED PROFESSIONAL ENGINEER
KIMBERLY NGUYEN
No. C 64577
Exp. 6/30/17
CIVIL
STATE OF CALIFORNIA

*THE STATE OF CALIFORNIA OR ITS OFFICERS OR AGENTS SHALL NOT BE RESPONSIBLE FOR THE ACCURACY OR COMPLETENESS OF SCANNED COPIES OF THIS PLAN SHEET.*

NOTE:

1. See standard Plan A77T2 for Detail of MGS Buried Post End Anchor.

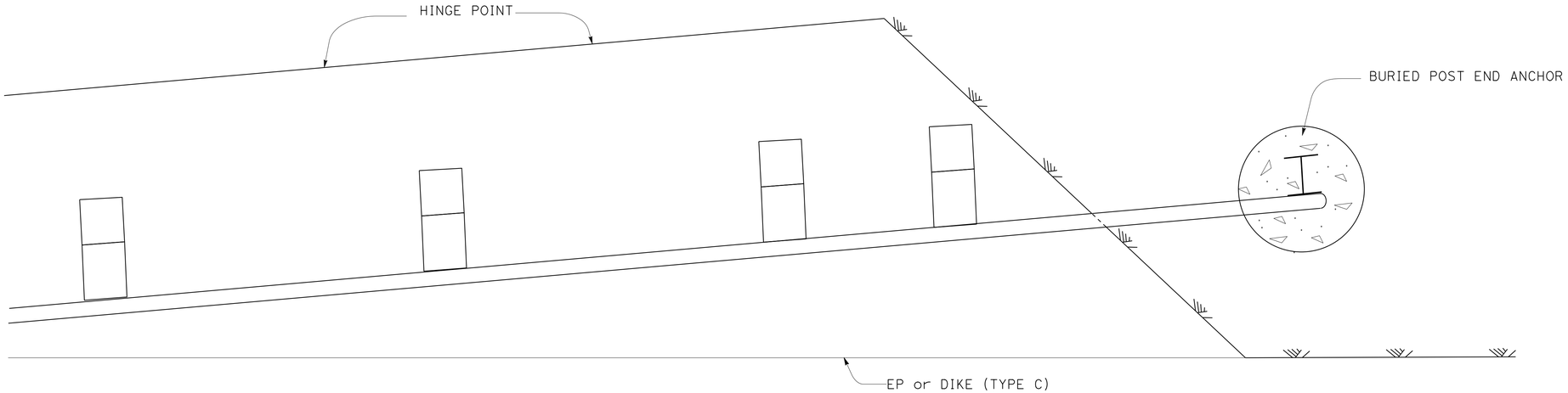


DIRECTION OF TRAFFIC

**PLAN**

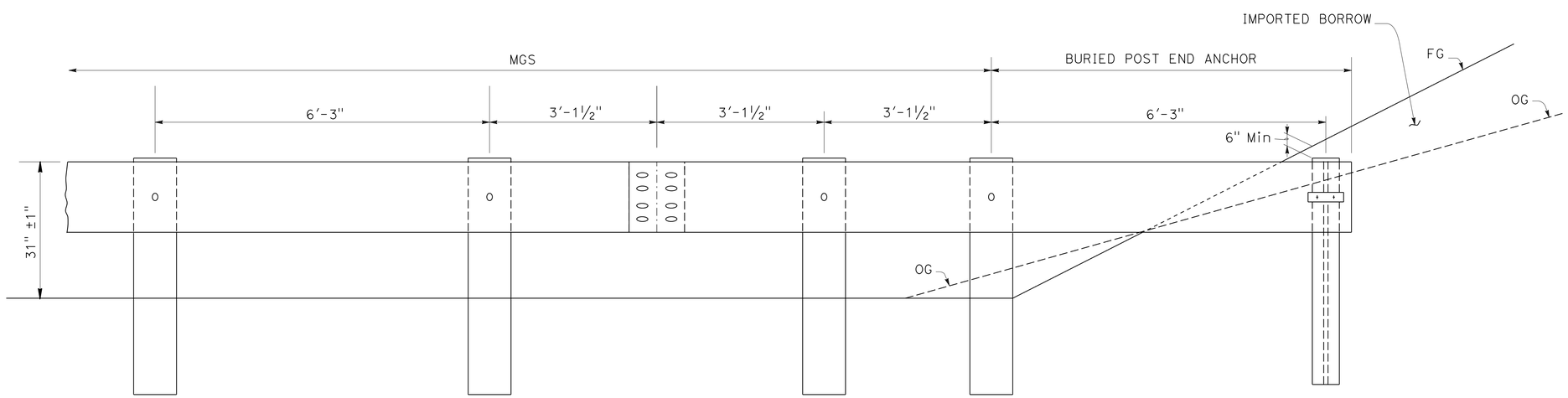


**ELEVATION**

**BURIED POST END ANCHOR**
NO SCALE

**CONSTRUCTION DETAILS**
NO SCALE

C-9

REVISED BY | DATE REVISED
KIMBERLY NGUYEN | MILI LIM STAMATION
CALCULATED-DESIGNED BY | CHECKED BY
FUNCTIONAL SUPERVISOR | MILI LIM STAMATION
STATE OF CALIFORNIA - DEPARTMENT OF TRANSPORTATION
Caltrans® DESIGN DIVISION

LAST REVISION 07-28-16 | DATE PLOTTED => 30-AUG-2016 TIME PLOTTED => 14:21

| Dist | COUNTY | ROUTE | POST MILES TOTAL PROJECT | SHEET No. | TOTAL SHEETS |
|---|---|---|---|---|---|
| 12 | Ora | 55, 57, 91 | 17.5/17.9; 15.2/16.0 5.8/6.8; 8.7/R9.5 | 21 | 95 |

REGISTERED CIVIL ENGINEER 07-26-16 DATE

07-25-16
PLANS APPROVAL DATE

REGISTERED PROFESSIONAL ENGINEER KIMBERLY NGUYEN No. C 64577 Exp. 6/30/17 CIVIL STATE OF CALIFORNIA

*THE STATE OF CALIFORNIA OR ITS OFFICERS OR AGENTS SHALL NOT BE RESPONSIBLE FOR THE ACCURACY OR COMPLETENESS OF SCANNED COPIES OF THIS PLAN SHEET.*

NOTES:

1. See "ROADWAY PLANS" for work locations #43 and 44.
2. See Standard Plan A76A and A76B for more Detail of Concrete Barrier Type 60 and Type 60C.
3. Holes used for fastening existing MBGR must be mortar filled, unless holes were cast using pipe sleeves.
4. Existing barrier heights vary. Where exist barrier height is more than 2'-8", transition barrier height to 2'-8" @ 4:1 slope.

ABBREVIATIONS:

RB ROCK BLANKET

LEGEND:

-·-·-·-·- Indicates existing

——— Indicates new structure

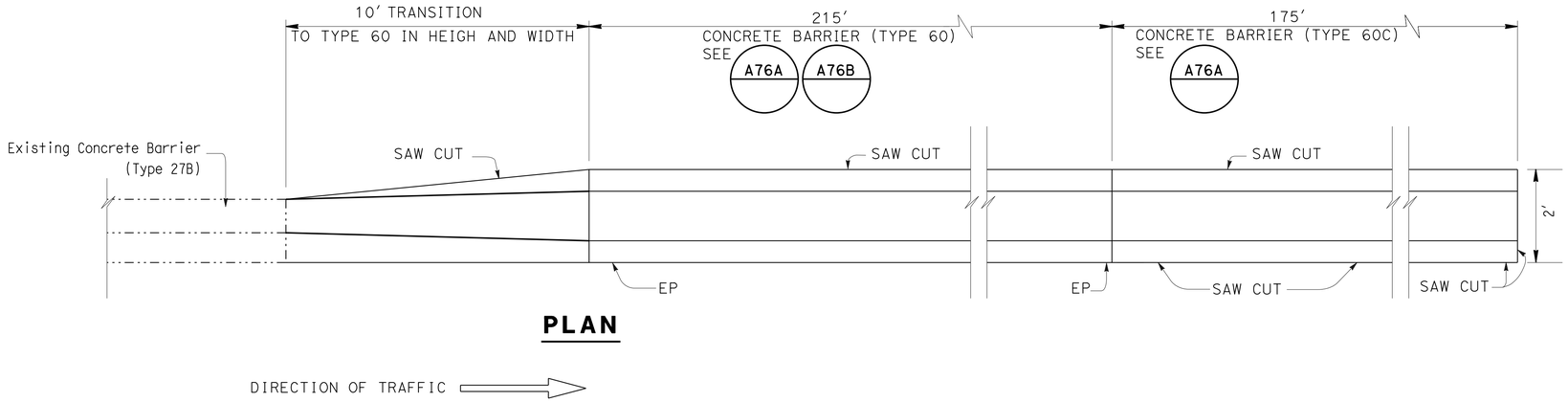


**PLAN**

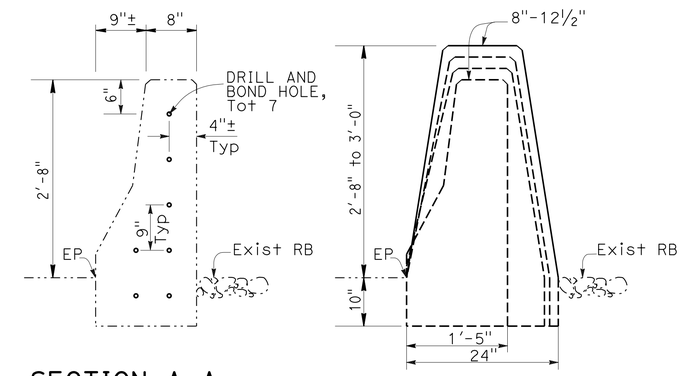


**SECTION A-A**

**SECTION B-B**

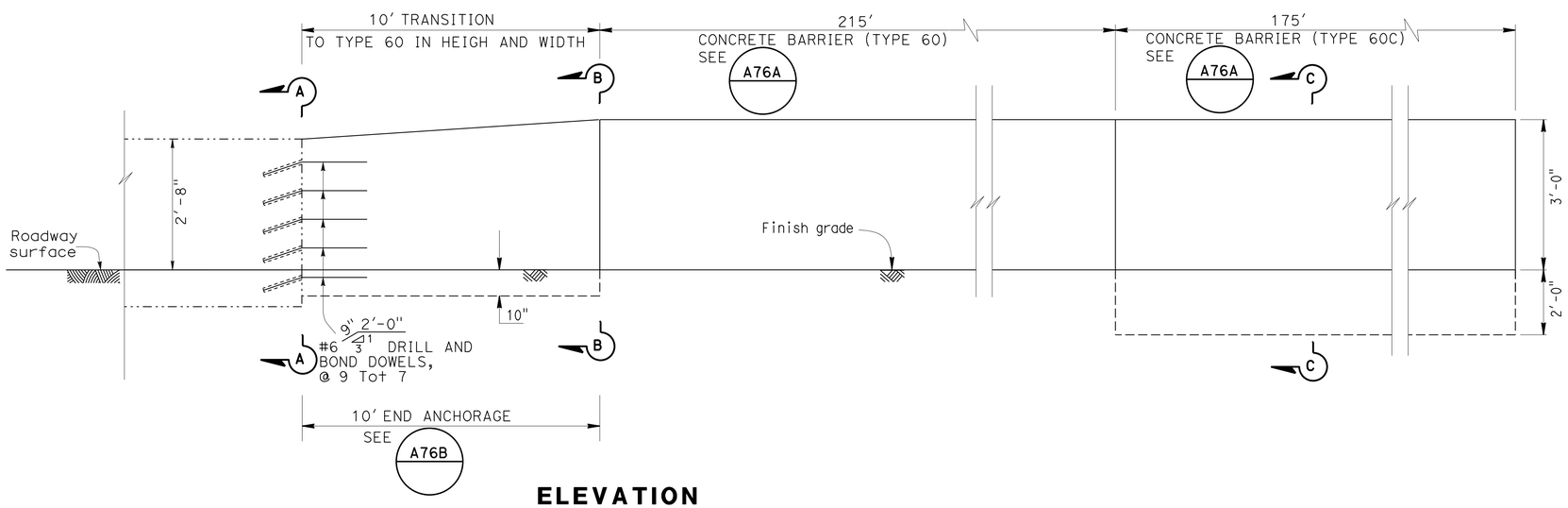


**ELEVATION**

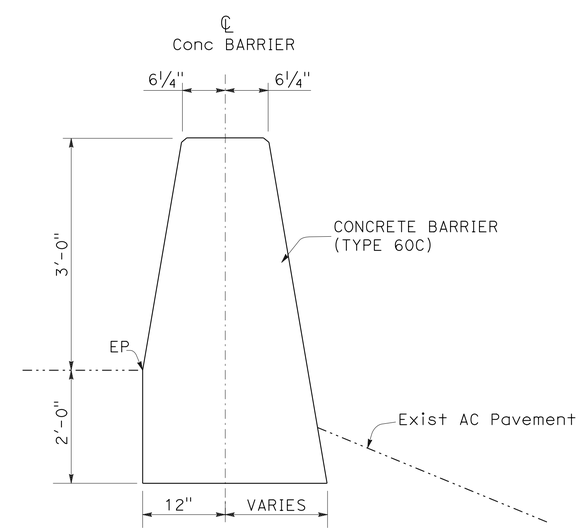


**SECTION C-C**

THE CONTRACTOR MUST VERIFY ALL CONTROLLING FIELD DIMENSIONS BEFORE ORDERING OR FABRICATING ANY MATERIAL.

## TRANSITION EXISTING CONCRETE BARRIER (TYPE 27B) TO CONCRETE BARRIER (TYPE 60) AND CONCRETE BARRIER (TYPE 60C)

## CONSTRUCTION DETAILS
NO SCALE

C-10

STATE OF CALIFORNIA - DEPARTMENT OF TRANSPORTATION
Caltrans DESIGN DIVISION

FUNCTIONAL SUPERVISOR: MILI LIM STAMATION
CALCULATED-DESIGNED BY: KIMBERLY NGUYEN
CHECKED BY: MILI LIM STAMATION
REVISED BY
DATE REVISED

LAST REVISION 07-28-16
DATE PLOTTED => 30-AUG-2016
TIME PLOTTED => 14:21

| Dist | COUNTY | ROUTE | POST MILES TOTAL PROJECT | SHEET No. | TOTAL SHEETS |
|---|---|---|---|---|---|
| 12 | Ora | 55, 57, 91 | 17.5/17.9; 15.2/16.0 5.8/6.8; 8.7/R9.5 | 22 | 95 |

REGISTERED CIVIL ENGINEER 07-26-16 DATE

07-25-16
PLANS APPROVAL DATE

REGISTERED PROFESSIONAL ENGINEER KIMBERLY NGUYEN No. C 64577 Exp. 6/30/17 CIVIL STATE OF CALIFORNIA

*THE STATE OF CALIFORNIA OR ITS OFFICERS OR AGENTS SHALL NOT BE RESPONSIBLE FOR THE ACCURACY OR COMPLETENESS OF SCANNED COPIES OF THIS PLAN SHEET.*

NOTES:

1. See "ROADWAY PLANS" for work location #5.
2. See Standard Plan A76A and A76B for more Detail of Concrete Barrier Type 60.
3. Holes used for fastening existing MBGR must be mortar filled, unless holes were cast using pipe sleeves.
4. Existing barrier heights vary. Where exist barrier height is more than 2'-8", transition barrier height to 2'-8" @ 4:1 slope.

ABBREVIATIONS:

CB CONCRETE BARRIER
RW RETAINING WALL

LEGEND:

Indicates existing

Indicates new structure

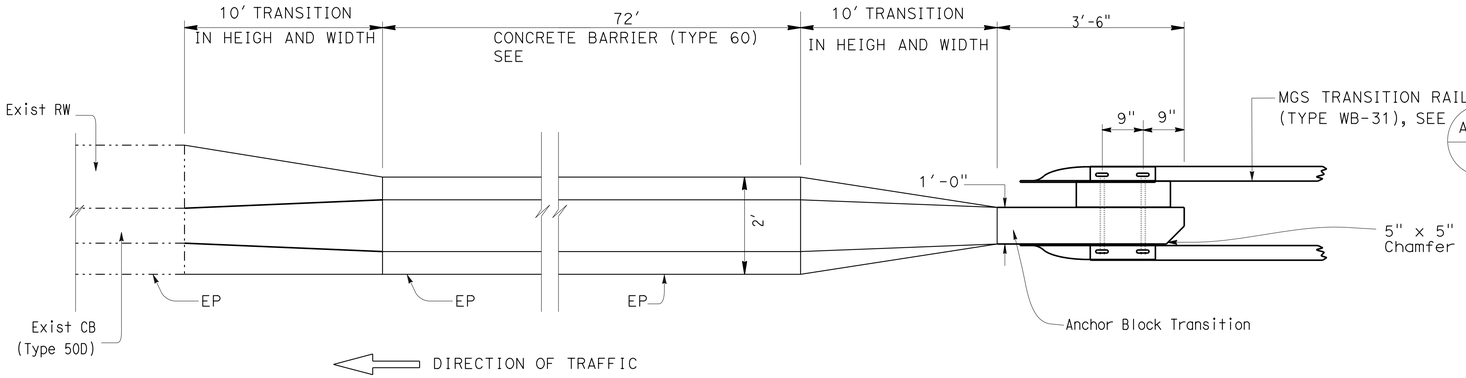


**PLAN**

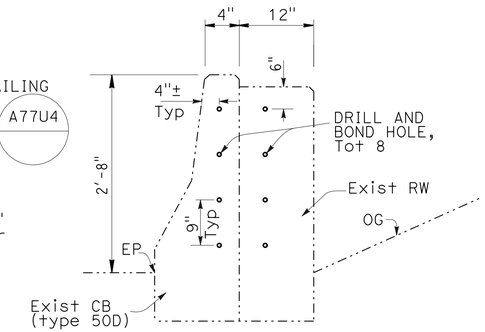


SECTION A-A

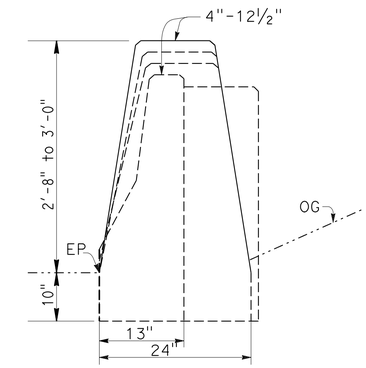


SECTION B-B

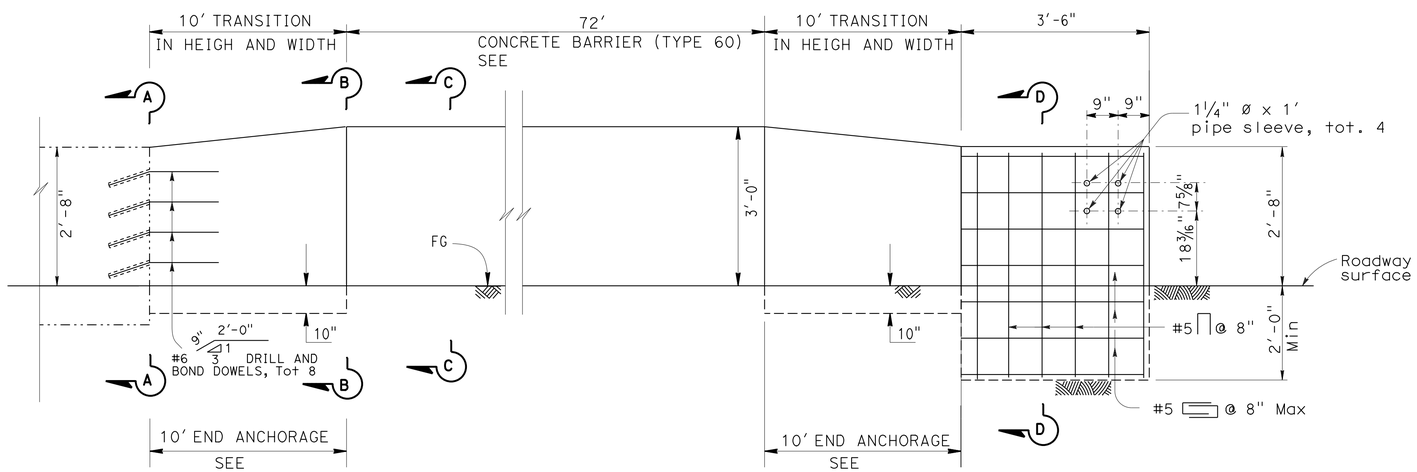


**ELEVATION**

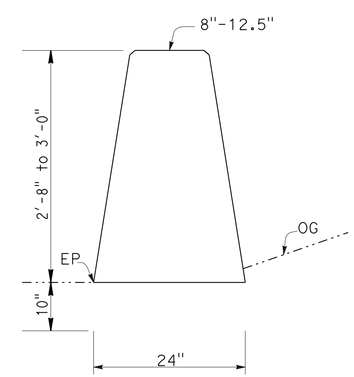


SECTION C-C

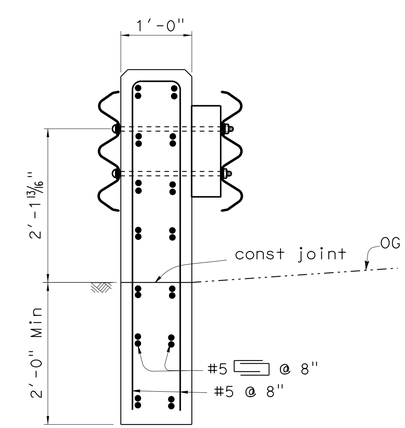


SECTION D-D

THE CONTRACTOR MUST VERIFY ALL CONTROLLING FIELD DIMENSIONS BEFORE ORDERING OR FABRICATING ANY MATERIAL.

## TRANSITION EXISTING CONCRETE BARRIER (TYPE 50D) WITH RETAINING WALL TO CONCRETE BARRIER (TYPE 60) AND TRANSITON RAILING (TYPE WB-31 CONNECTION)

## CONSTRUCTION DETAILS
NO SCALE

C-11

STATE OF CALIFORNIA - DEPARTMENT OF TRANSPORTATION
Caltrans® DESIGN DIVISION

FUNCTIONAL SUPERVISOR: MILI LIM STAMATION
CALCULATED-DESIGNED BY: KIMBERLY NGUYEN
CHECKED BY: MILI LIM STAMATION
REVISED BY / DATE REVISED

LAST REVISION 07-28-16
DATE PLOTTED => 30-AUG-2016
TIME PLOTTED => 14:21

| Dist | COUNTY | ROUTE | POST MILES TOTAL PROJECT | SHEET No. | TOTAL SHEETS |
|---|---|---|---|---|---|
| 12 | Ora | 55, 57, 91 | 17.5/17.9; 15.2/16.0 5.8/6.8; 8.7/R9.5 | 23 | 95 |

REGISTERED CIVIL ENGINEER 07-26-16 DATE

07-25-16
PLANS APPROVAL DATE

REGISTERED PROFESSIONAL ENGINEER KIMBERLY NGUYEN No. C 64577 Exp. 6/30/17 CIVIL STATE OF CALIFORNIA

*THE STATE OF CALIFORNIA OR ITS OFFICERS OR AGENTS SHALL NOT BE RESPONSIBLE FOR THE ACCURACY OR COMPLETENESS OF SCANNED COPIES OF THIS PLAN SHEET.*

NOTE:

See standard Plan A76C for Detail of Concrete Barrier (60F).

LEGEND:

4" HMA (TYPE A) PAVEMENT

CENTER LINE CONCRETE BARRIER

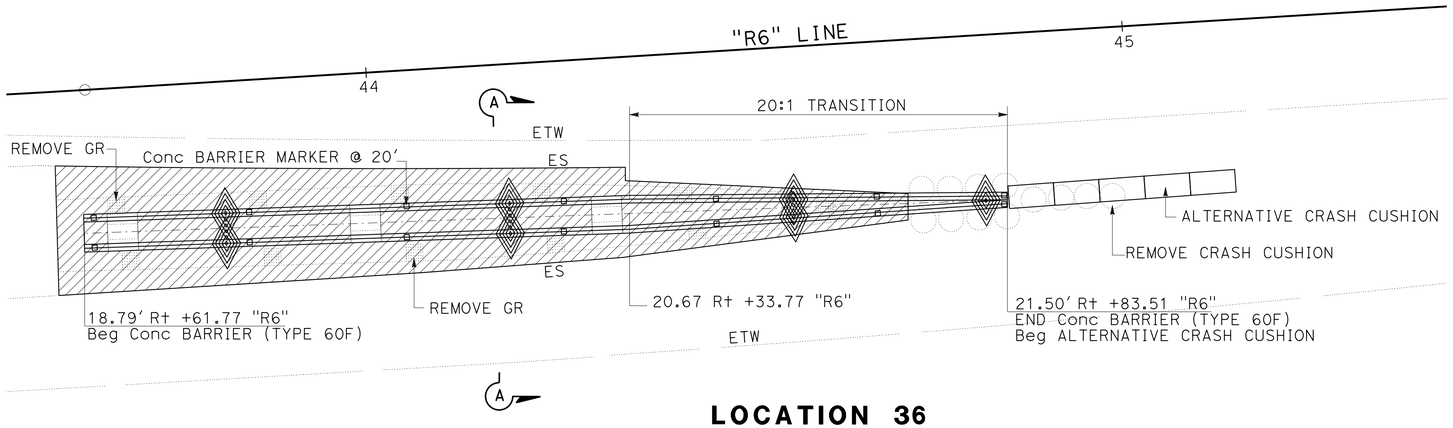


**LOCATION 36**
**DETAIL A**

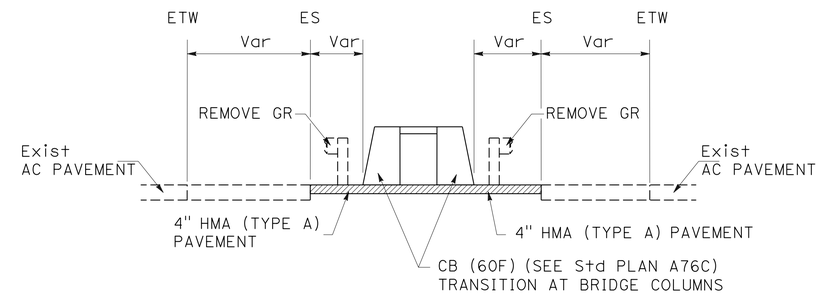


**SECTION A-A**
NO SCALE

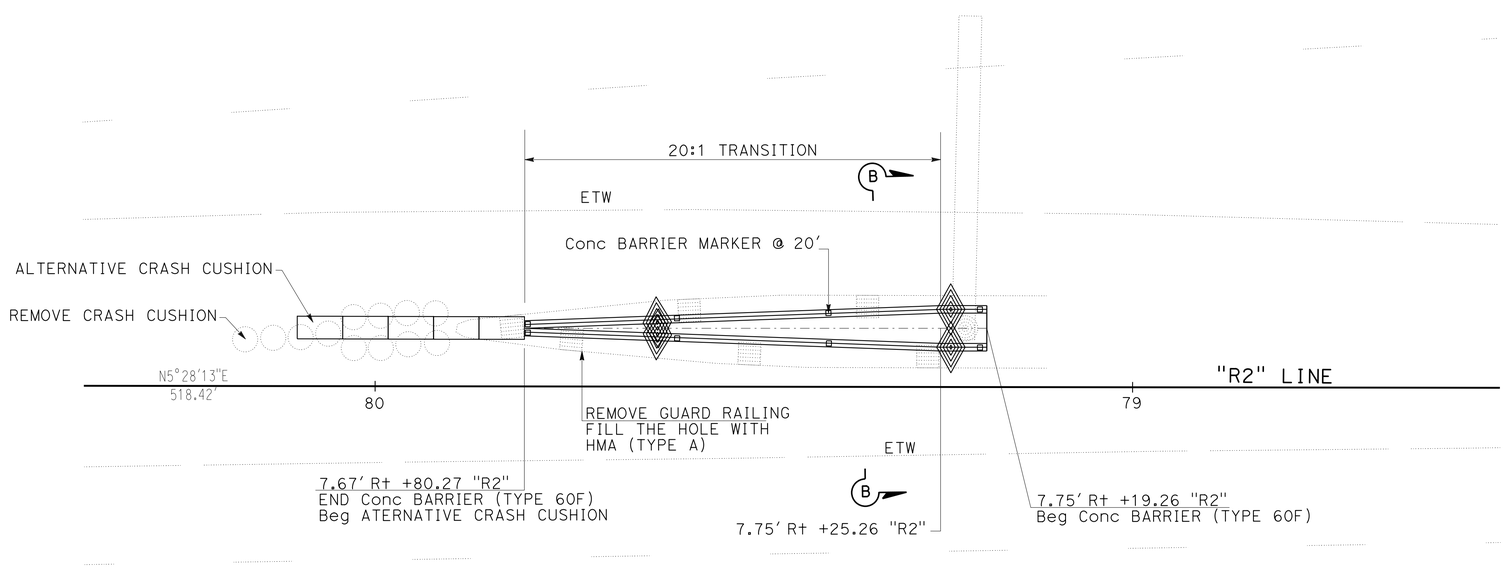


**LOCATION 28**
**DETAIL B**

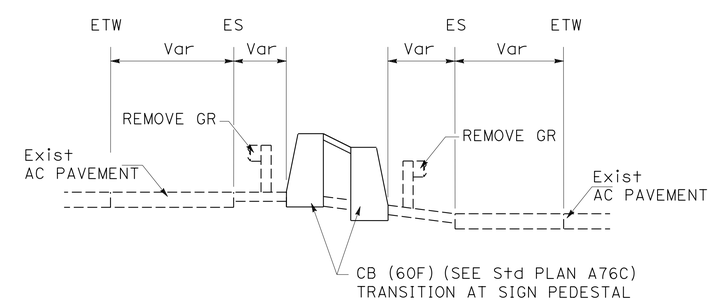


**SECTION B-B**
NO SCALE

# CONSTRUCTION DETAILS
NO SCALE

C-12

STATE OF CALIFORNIA - DEPARTMENT OF TRANSPORTATION
Caltrans® DESIGN DIVISION

FUNCTIONAL SUPERVISOR: MILI LIM STAMATION
CALCULATED-DESIGNED BY: KIMBERLY NGUYEN
CHECKED BY: MILI LIM STAMATION
REVISED BY
DATE REVISED

LAST REVISION 07-28-16
DATE PLOTTED => 30-AUG-2016
TIME PLOTTED => 14:21

| Dist | COUNTY | ROUTE | POST MILES TOTAL PROJECT | SHEET No. | TOTAL SHEETS |
|---|---|---|---|---|---|
| 12 | Ora | 55, 57, 91 | 17.5/17.9; 15.2/16.0 5.8/6.8; 8.7/R9.5 | 24 | 95 |

Wnguyen 07-26-16
REGISTERED CIVIL ENGINEER DATE

07-25-16
PLANS APPROVAL DATE

REGISTERED PROFESSIONAL ENGINEER KIMBERLY NGUYEN No. C 64577 Exp. 06/30/17 CIVIL STATE OF CALIFORNIA

*THE STATE OF CALIFORNIA OR ITS OFFICERS OR AGENTS SHALL NOT BE RESPONSIBLE FOR THE ACCURACY OR COMPLETENESS OF SCANNED COPIES OF THIS PLAN SHEET.*

## LEGENDS:

- AERIALLY DEPOSITED LEAD (TYPE Y-1) MATERIAL
- EXCAVATION AREA FOR AERIALLY DEPOSITED LEAD (TYPE Y-1) BURIAL (4′ DEEP)
- PLACE NON-CONTAMINATED SOIL FROM EXCAVATION, RESTORE THE AREA TO ITS ORGINAL CONDITION

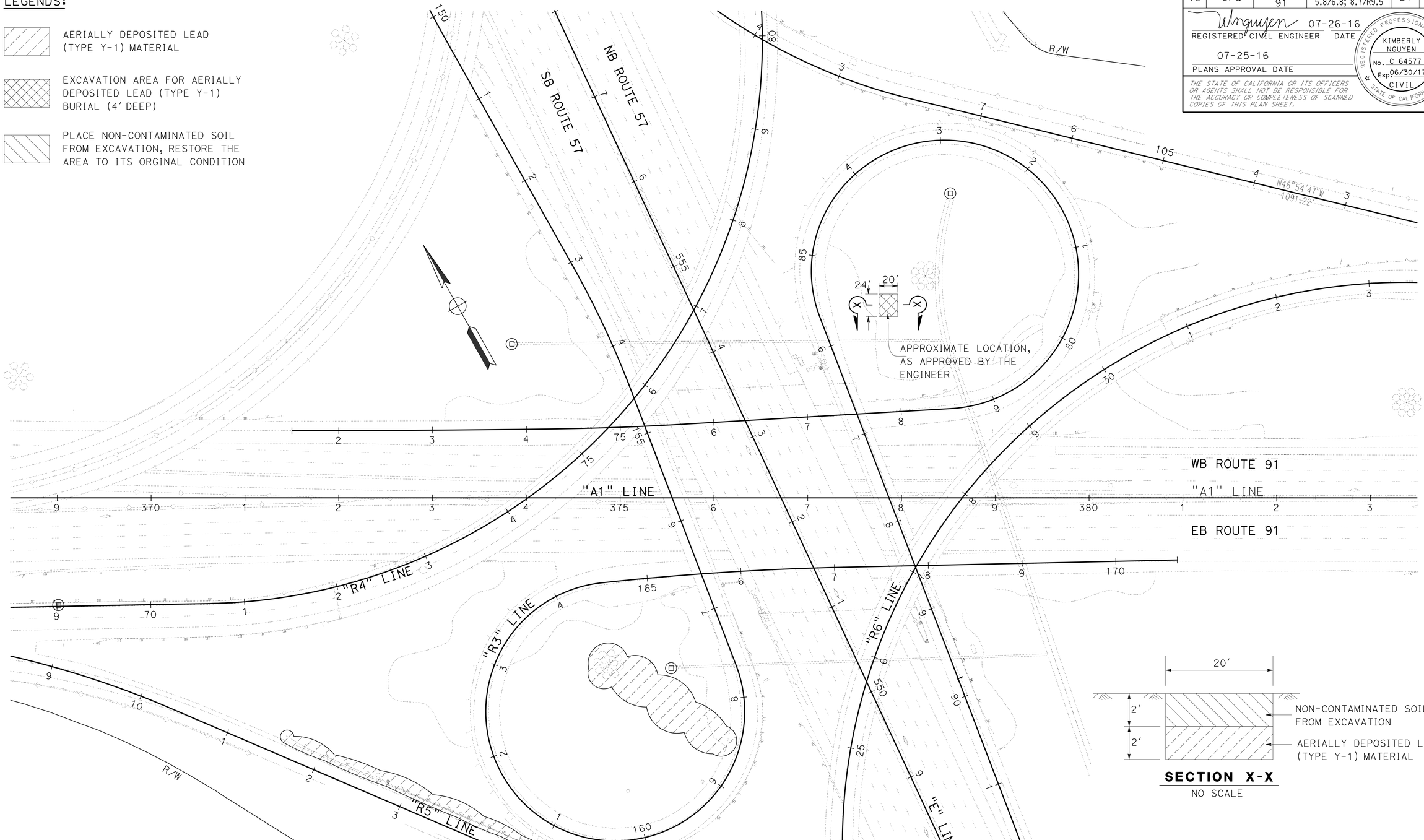





**SECTION X-X**
NO SCALE

NOTE:
FOR ACCURATE RIGHT OF WAY DATA, CONTACT RIGHT OF WAY ENGINEERING AT THE DISTRICT OFFICE.

# CONSTRUCTION DETAILS
**(AERIALLY DEPOSITED LEAD ANDDISPOSAL)**
SCALE 1" = 50′

**C-13**

| REVISED BY | DATE REVISED |
|---|---|
| KIMBERLY NGUYEN | RAHMATOLAH YAGHOUBI |
| CALCULATED-DESIGNED BY | CHECKED BY |
| FUNCTIONAL SUPERVISOR | MILI LIM STAMATION |

STATE OF CALIFORNIA - DEPARTMENT OF TRANSPORTATION
Caltrans® DESIGN DIVISION

LAST REVISION 07-28-16 | DATE PLOTTED => 30-AUG-2016 TIME PLOTTED => 14:21

| DIST | COUNTY | ROUTE | POST MILES TOTAL PROJECT | SHEET No. | TOTAL SHEETS |
|---|---|---|---|---|---|
| 12 | Ora | 55, 57, 91 | 17.5/17.9,15.2/16.0, 5.8/6.8,8.7/R9.5 | 25 | 95 |

REGISTERED CIVIL ENGINEER 5-13-16 DATE

07-25-16
PLANS APPROVAL DATE

REGISTERED PROFESSIONAL ENGINEER YU SONG No. C71687 Exp. 12/31/17 CIVIL STATE OF CALIFORNIA

*The State of California or its officers or agents shall not be responsible for the accuracy or completeness of scanned copies of this plan sheet.*

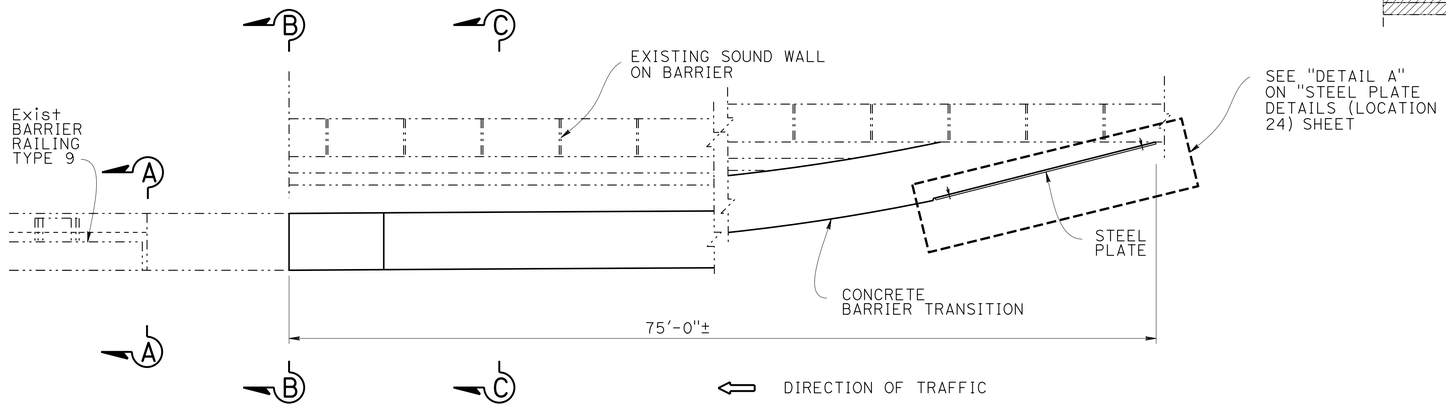


PLAN
¾" = 1'-0"

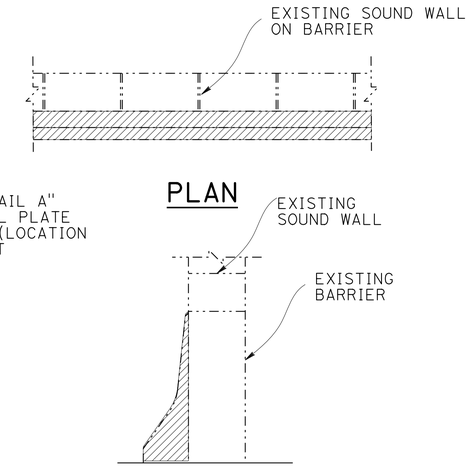


PARTIAL BARRIER REMOVAL
¾" = 1'-0"

NOTES:

1. See "LOCATION TABLE" for work location.
2. Holes used for fastening existing MBGR must be mortar filled, unless holes were cast using pipe sleeves.
3. Existing barrier heights vary. Where existing barrier height is more than 2'-8", transition barrier height to 2'-8" @ 4:1 slope.
4. The alignment of the new concretE barrier transition must follow that of the existing MBGR.
5. Partially remove the existing sound wall barrier with existing rebar to remain.

LEGEND:

- Indicates existing
- Indicates new structure
- Concrete Removal

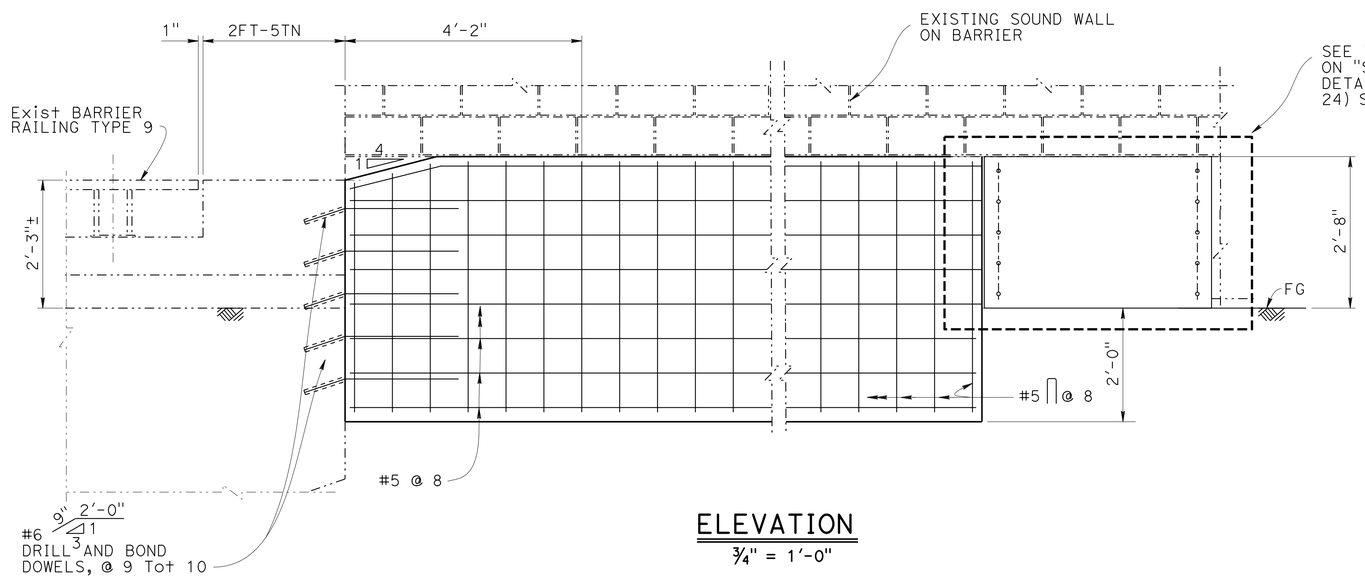


ELEVATION
¾" = 1'-0"

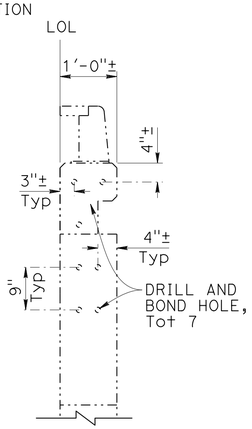


SECTION A-A
¾" = 1'-0"

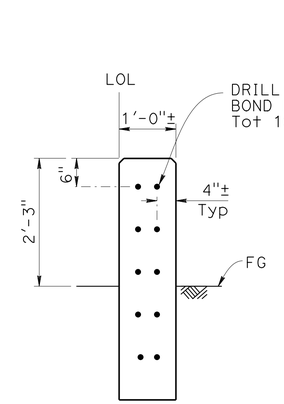


SECTION B-B
¾" = 1'-0"

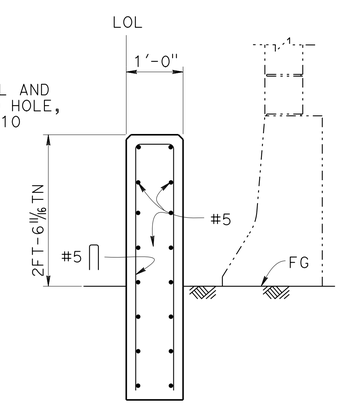


SECTION C-C
¾" = 1'-0"

LOCATION TABLE OF TYPE 9 CONCRETE BARRIER TRANSITION

| BRIDGE No. | BRIDGE NAME | ROUTE | POST MILE | DIRECTION | APPROACH END | DEPARTURE END | LENGTH | TOTAL LENGTH | PLAN TYPE |
|---|---|---|---|---|---|---|---|---|---|
| 55-0470G | LA PALMA AVENUE UC | 57 | 15.373 | EB RIGHT | 1 | | 75'-0"± | 75'-0"± | A |

THE CONTRACTOR MUST VERIFY ALL CONTROLLING FIELD DIMENSIONS BEFORE ORDERING OR FABRICATING ANY MATERIAL.

# CONSTRUCTION DETAILS

C-14

BRANCH CHIEF DAVID A. NEUMANN

| | BY | CHECKED |
|---|---|---|
| DESIGN | YU SONG | VICTOR LOPEZ |
| DETAILS | BOB EDWARDS | YU SONG |
| QUANTITIES | YU SONG | VICTOR LOPEZ |

STATE OF CALIFORNIA DEPARTMENT OF TRANSPORTATION

DIVISION OF ENGINEERING SERVICES DESIGN AND TECHNICAL SERVICES SPECIAL DESIGNS BRANCH B

BRIDGE NO. 55-0470G
POST MILE 15.373

CONCRETE BARRIER TRANSITION
TYPE 9 BARRIER (LOCATION 24)

STRUCTURES DESIGN DETAIL SHEET (ENGLISH) (REV. 09-01-10)

ORIGINAL SCALE IN INCHES FOR REDUCED PLANS 0 1 2 3

UNIT: 3619
PROJECT NUMBER & PHASE: 1212000121-1
CONTRACT NO.: 12-0M6101

DISREGARD PRINTS BEARING EARLIER REVISION DATES

REVISION DATES 04-22-15 4-12-16 5-13-16 2-29-16

SHEET 8 OF 9

FILE => 1212000121ga014.dgn

USERNAME => s129866 DATE PLOTTED => 30-AUG-2016 TIME PLOTTED => 14:21

| DIST | COUNTY | ROUTE | POST MILES TOTAL PROJECT | SHEET No. | TOTAL SHEETS |
|---|---|---|---|---|---|
| 12 | Ora | 55, 57, 91 | 17.5/17.9,15.2/16.0, 5.8/6.8,8.7/R9.5 | 26 | 95 |

REGISTERED CIVIL ENGINEER 5-13-16 DATE

07-25-16
PLANS APPROVAL DATE

REGISTERED PROFESSIONAL ENGINEER YU SONG No. C71687 Exp. 12/31/17 CIVIL STATE OF CALIFORNIA

*The State of California or its officers or agents shall not be responsible for the accuracy or completeness of scanned copies of this plan sheet.*

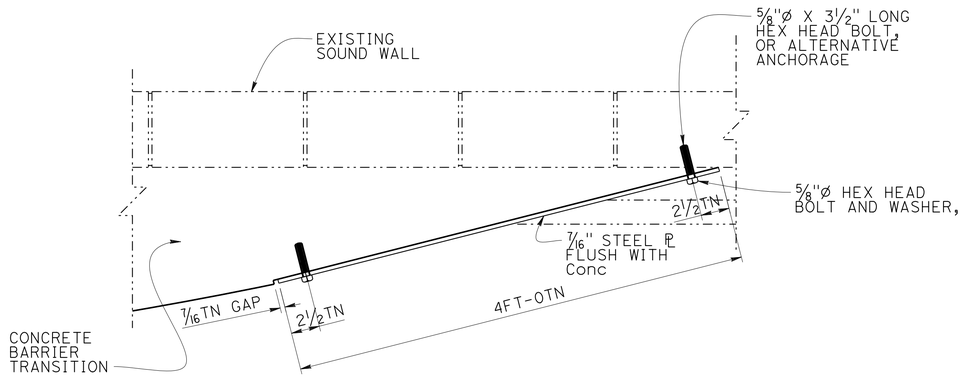


## DETAIL A

1 1/2" = 1'-0"

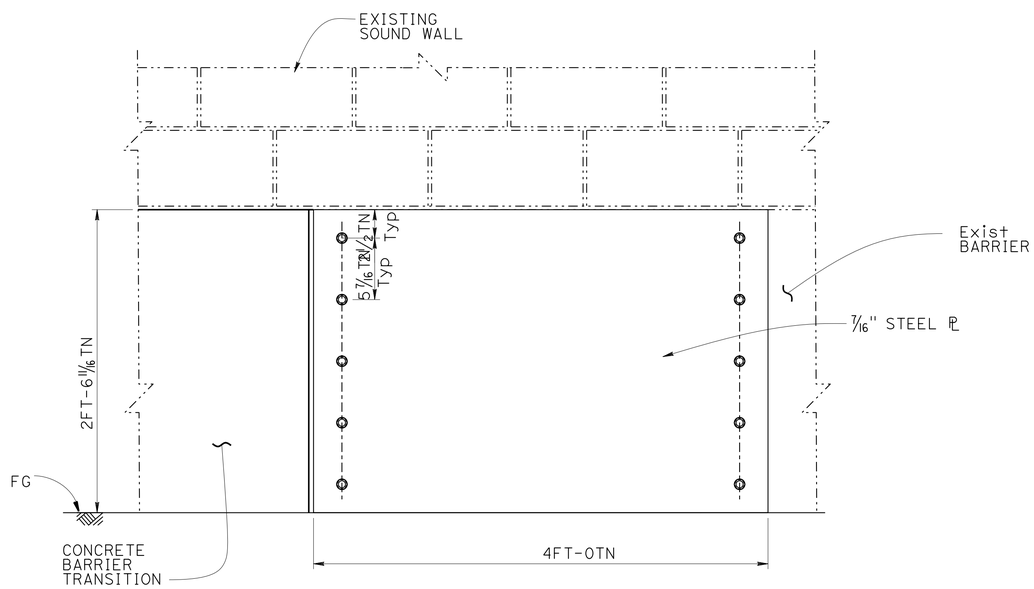


## DETAIL B

1 1/2" = 1'-0"

THE CONTRACTOR MUST VERIFY ALL CONTROLLING FIELD DIMENSIONS BEFORE ORDERING OR FABRICATING ANY MATERIAL.

**NOTES:**

1. All plates and connections must be galvanized.
2. Structural steel, fy=50,000 psi.

**LEGEND:**

-·-·-·-·- Indicates existing

———— Indicates new structure

# CONSTRUCTION DETAILS

C-15

| | | | |
|---|---|---|---|
| BRANCH CHIEF DAVID A. NEUMANN | DESIGN | BY YU SONG | CHECKED VICTOR LOPEZ |
| | DETAILS | BY BOB EDWARDS | CHECKED YU SONG |
| | QUANTITIES | BY YU SONG | CHECKED VICTOR LOPEZ |

STATE OF CALIFORNIA DEPARTMENT OF TRANSPORTATION

DIVISION OF ENGINEERING SERVICES DESIGN AND TECHNICAL SERVICES SPECIAL DESIGNS BRANCH B

BRIDGE NO. 55-0470G
POST MILE 15.373

**CONCRETE BARRIER TRANSITION**
**STEEL PLATE DETAILS (LOCATION 24)**

STRUCTURES DESIGN DETAIL SHEET (ENGLISH) (REV. 09-01-10)

ORIGINAL SCALE IN INCHES FOR REDUCED PLANS 0 1 2 3

UNIT: 3619
PROJECT NUMBER & PHASE: 1212000121-1 CONTRACT NO.: 12-0M6101

DISREGARD PRINTS BEARING EARLIER REVISION DATES → REVISION DATES 04-25-15 4-12-16 5-13-16 2-29-16 SHEET 9 OF 9

FILE => 1212000121ga015.dgn

USERNAME => s129866 DATE PLOTTED => 30-AUG-2016 TIME PLOTTED => 14:21

| DIST | COUNTY | ROUTE | POST MILES TOTAL PROJECT | SHEET No. | TOTAL SHEETS |
|---|---|---|---|---|---|
| 12 | Ora | 55, 57, 91 | 17.5/17.9,15.2/16.0, 5.8/6.8,8.7/R9.5 | 27 | 95 |

REGISTERED CIVIL ENGINEER — DATE 8-29-16

PLANS APPROVAL DATE

REGISTERED PROFESSIONAL ENGINEER — YU SONG — No. C71687 — Exp. 12/31/17 — CIVIL — STATE OF CALIFORNIA

*The State of California or its officers or agents shall not be responsible for the accuracy or completeness of scanned copies of this plan sheet.*

NOTES:

1. See "LOCATION TABLE" for work location.
2. Remove existiong MBGR, rail posts, wood posts, and HMA dikes.
3. Perform grading to create level base and minimum bench.
4. Install Concrete Barrier Type 60 including transition along both sides of the ramp towards Route 91 at North. The alignment of the new concrete barrier must follow the alignment of the edge of traveled way.
5. Holes used for fastening existing MBGR must be mortar filled, unless holes were cast using pipe sleeves.
6. See Standard Plans A76A and A76B for "CONCRETE BARRIER TYPE 60" and it's end anchorage.
7. Only show concrete barrier at east side of the ramp, west side is similar.

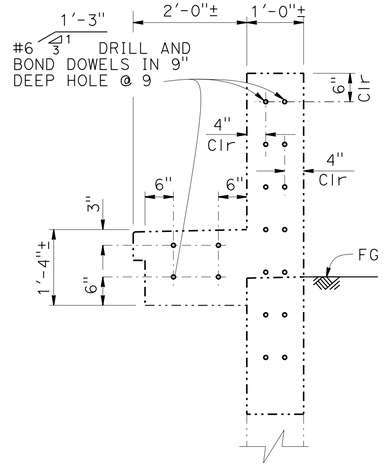


SECTION A-A

3/4" = 1'-0"

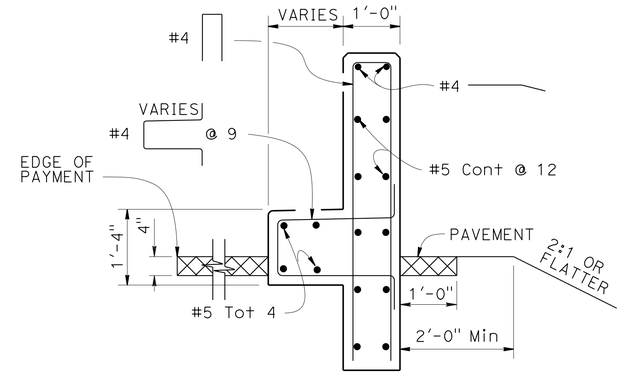


SECTION B-B

3/4" = 1'-0"

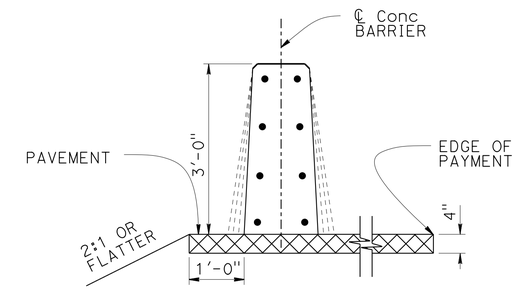


SECTION C-C

3/4" = 1'-0"

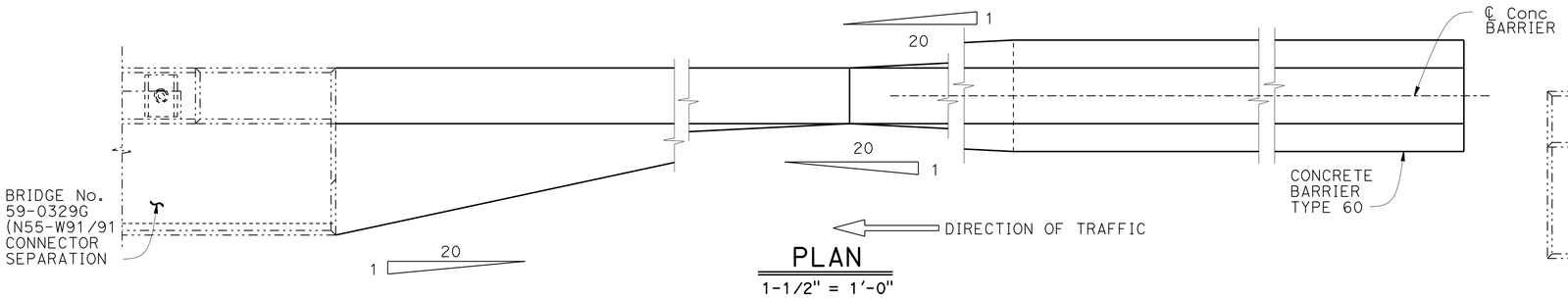


PLAN

1-1/2" = 1'-0"

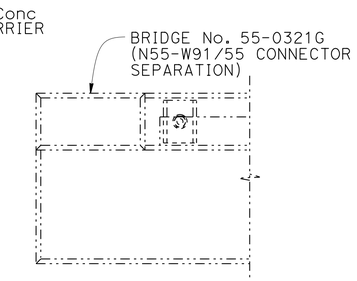


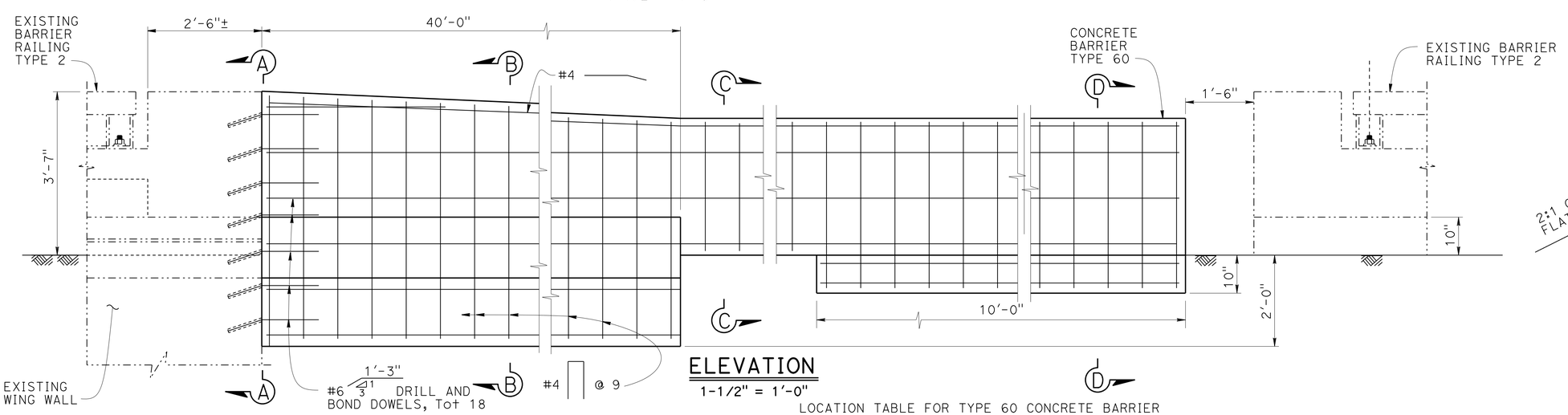


ELEVATION

1-1/2" = 1'-0"

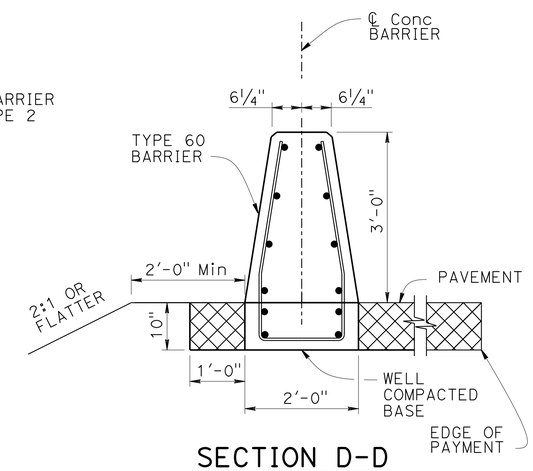


SECTION D-D

3/4" = 1'-0"

LOCATION TABLE FOR TYPE 60 CONCRETE BARRIER

| BRIDGE No. | BRIDGE NAME | ROUTE | POST MILE | DIRECTION | APPROACH END | DEPARTURE END | LENGTH | TOTAL LENGTH | PLAN TYPE |
|---|---|---|---|---|---|---|---|---|---|
| 59-0329G | N55-W91/91 CONNECTOR SEPARATION | 91 | R9.116 | NB LEFT | 1 | | 185'-0"± | 367'-0"± | A |
| | | | | NB RIGHT | 1 | | 182'-0"± | | |

THE CONTRACTOR MUST VERIFY ALL CONTROLLING FIELD DIMENSIONS BEFORE ORDERING OR FABRICATING ANY MATERIAL.

# CONSTRUCTION DETAILS

C-16

BRANCH CHIEF DAVID A. NEUMANN

| | BY | CHECKED |
|---|---|---|
| DESIGN | YU SONG | VICTOR LOPEZ |
| DETAILS | BOB EDWARDS | YU SONG |
| QUANTITIES | YU SONG | VICTOR LOPEZ |

STATE OF CALIFORNIA DEPARTMENT OF TRANSPORTATION

DIVISION OF ENGINEERING SERVICES DESIGN AND TECHNICAL SERVICES SPECIAL DESIGNS BRANCH B

BRIDGE NO. VARIES — POST MILE R9.116

CONCRETE BARRIER TRANSITION

TYPE 60 BARRIER (LOCATION 40 & 41)

FILE => 1212000121ga016.dgn
USERNAME => s129866 DATE PLOTTED => 30-AUG-2016 TIME PLOTTED => 14:21

ORIGINAL SCALE IN INCHES FOR REDUCED PLANS 0 1 2 3

UNIT: 3619
PROJECT NUMBER & PHASE: 1212000121-1 CONTRACT NO.: 12-0M6101

DISREGARD PRINTS BEARING EARLIER REVISION DATES

REVISION DATES 04-22-15 4-13-16 5-13-16 8-19-16

SHEET 7 OF 9

| DIST | COUNTY | ROUTE | POST MILES TOTAL PROJECT | SHEET No. | TOTAL SHEETS |
|---|---|---|---|---|---|
| 12 | Ora | 55, 57, 91 | 17.5/17.9,15.2/16.0, 5.8/6.8,8.7/R9.5 | 28 | 95 |

REGISTERED CIVIL ENGINEER 8-29-16 DATE

PLANS APPROVAL DATE

REGISTERED PROFESSIONAL ENGINEER YU SONG No. C71687 Exp. 12/31/17 CIVIL STATE OF CALIFORNIA

*The State of California or its officers or agents shall not be responsible for the accuracy or completeness of scanned copies of this plan sheet.*

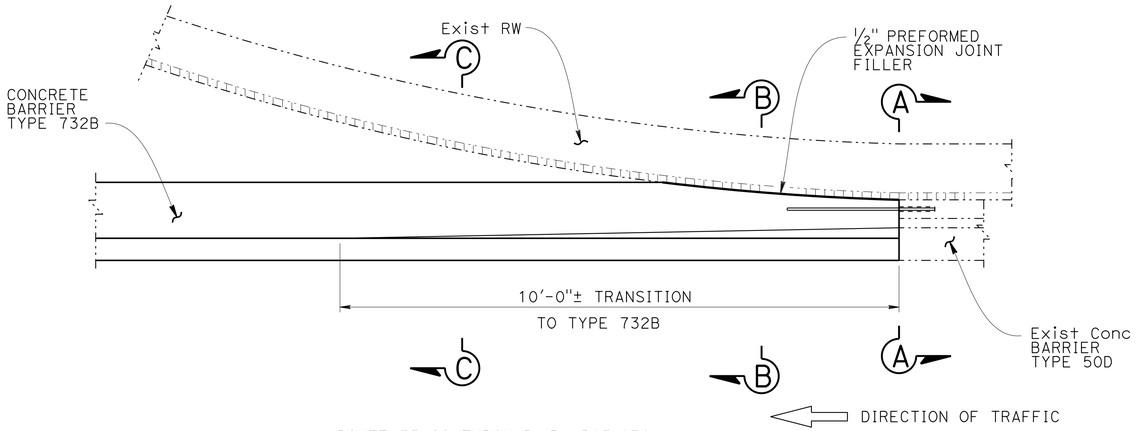


ROUTE 55 SOUTHBOUND, PM R17.876

## PLAN

3/4" = 1'-0"

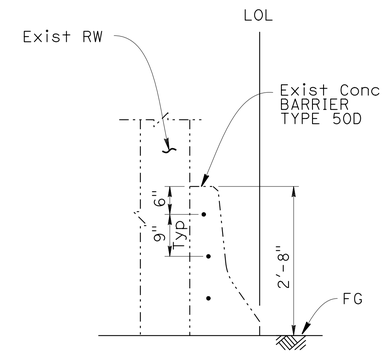


## SECTION A-A

3/4" = 1'-0"

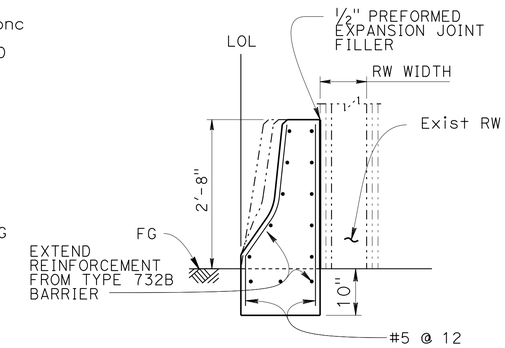


## SECTION B-B

3/4" = 1'-0"

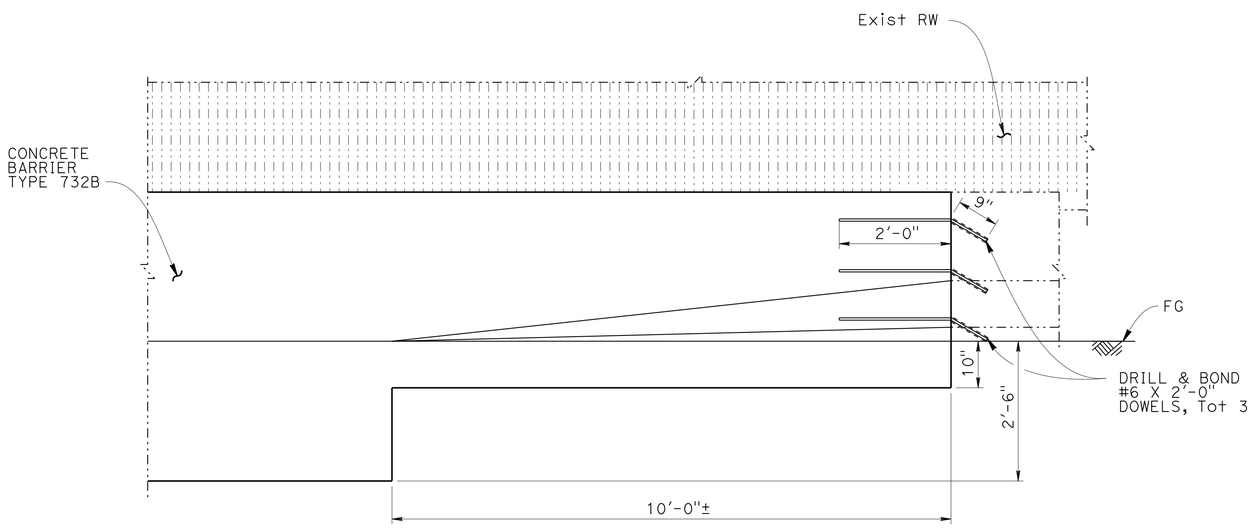


## ELEVATION

3/4" = 1'-0"

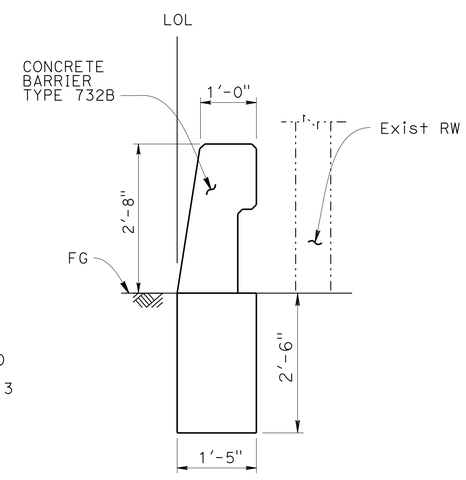


## SECTION C-C

3/4" = 1'-0"

NOTES:

1. See "ROADWAY PLANS" for work location.
2. Holes used for fastening existing MBGR must be mortar filled, unless holes were cast using pipe sleeves.
3. Existing barrier heights vary. Where existing barrier height is more than 2'-8", transition barrier height to 2'-8" @ 4:1 slope.
4. See Standard Plan B11-55 for details of Concrete Barrier Type 732B.

LEGEND:

Indicates existing

Indicates new structure

THE CONTRACTOR MUST VERIFY ALL CONTROLLING FIELD DIMENSIONS BEFORE ORDERING OR FABRICATING ANY MATERIAL.

# CONSTRUCTION DETAILS

C-17

| | | | |
|---|---|---|---|
| BRANCH CHIEF DAVID A. NEUMANN | DESIGN | BY YU SONG | CHECKED VICTOR LOPEZ |
| | DETAILS | BY BOB EDWARDS | CHECKED YU SONG |
| | QUANTITIES | BY YU SONG | CHECKED VICTOR LOPEZ |

STATE OF CALIFORNIA DEPARTMENT OF TRANSPORTATION

DIVISION OF ENGINEERING SERVICES DESIGN AND TECHNICAL SERVICES SPECIAL DESIGNS BRANCH B

BRIDGE NO. N/A

POST MILE R17.876

**CONCRETE BARRIER TRANSITION**

**TYPE 732B BARRIER (LOCATION 45-APPROACH END)**

FILE => 1212000121ga017.dgn
USERNAME => s129866 DATE PLOTTED => 30-AUG-2016 TIME PLOTTED => 14:21

ORIGINAL SCALE IN INCHES FOR REDUCED PLANS 0 1 2 3

UNIT: 3619
PROJECT NUMBER & PHASE: 1212000121-1 CONTRACT NO.: 12-0M6101

DISREGARD PRINTS BEARING EARLIER REVISION DATES

REVISION DATES: 04-22-15 8-19-16 5-13-16 3-16-16

SHEET 5 OF 9

| DIST | COUNTY | ROUTE | POST MILES TOTAL PROJECT | SHEET No. | TOTAL SHEETS |
|---|---|---|---|---|---|
| 12 | Ora | 55, 57, 91 | 17.5/17.9,15.2/16.0, 5.8/6.8,8.7/R9.5 | 29 | 95 |

REGISTERED CIVIL ENGINEER — DATE 8-29-16

PLANS APPROVAL DATE

REGISTERED PROFESSIONAL ENGINEER — YU SONG — No. C71687 — Exp. 12/31/17 — CIVIL — STATE OF CALIFORNIA

*The State of California or its officers or agents shall not be responsible for the accuracy or completeness of scanned copies of this plan sheet.*

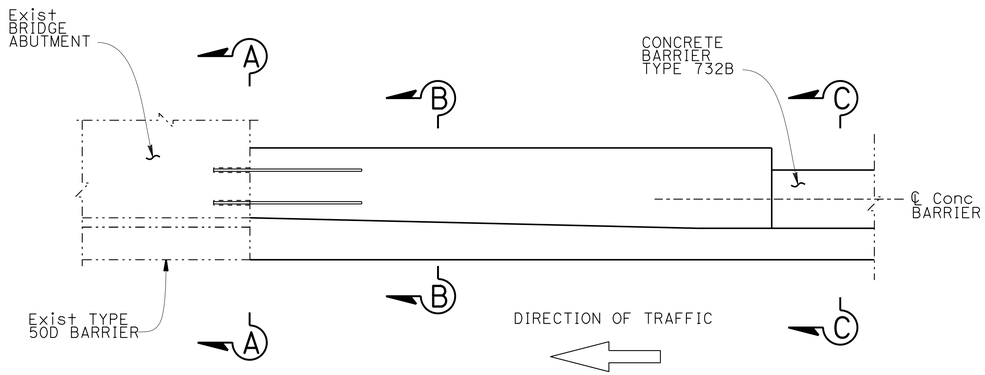


ROUTE 55 SOUTHBOUND, PM R17.876

## PLAN

¾" = 1'-0"

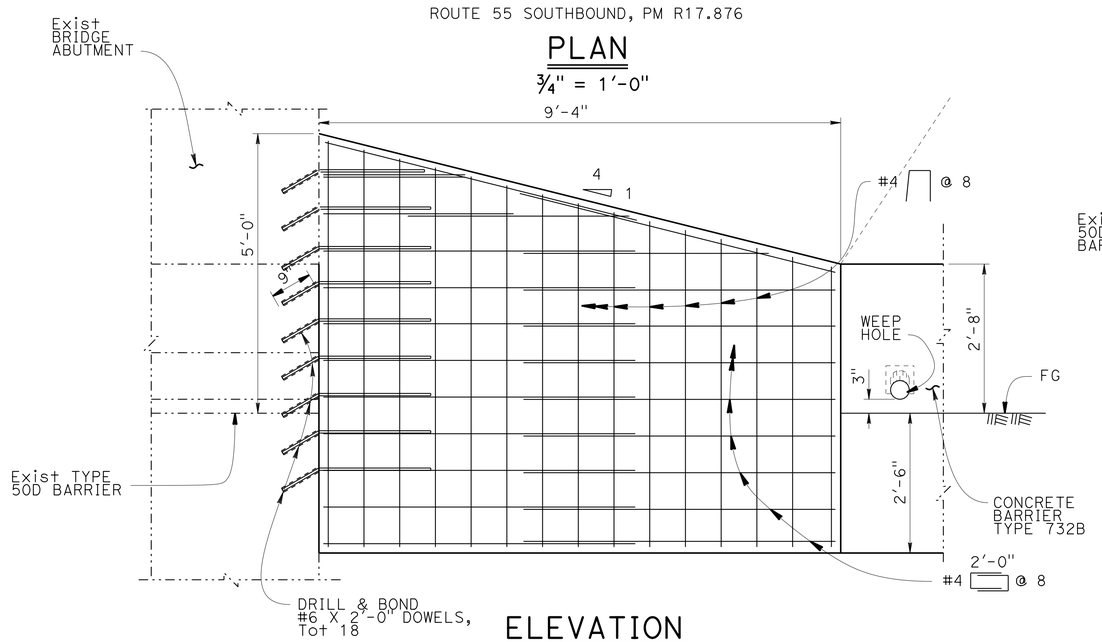


## ELEVATION

¾" = 1'-0"

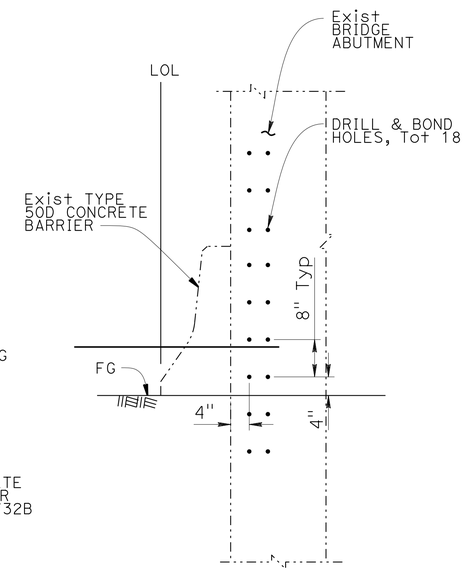


## SECTION A-A

¾" = 1'-0"

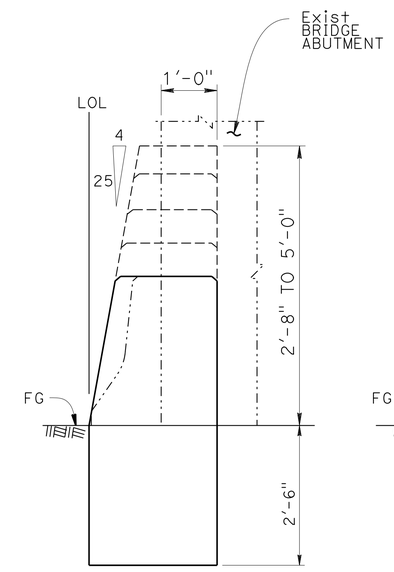


## SECTION B-B

¾" = 1'-0"

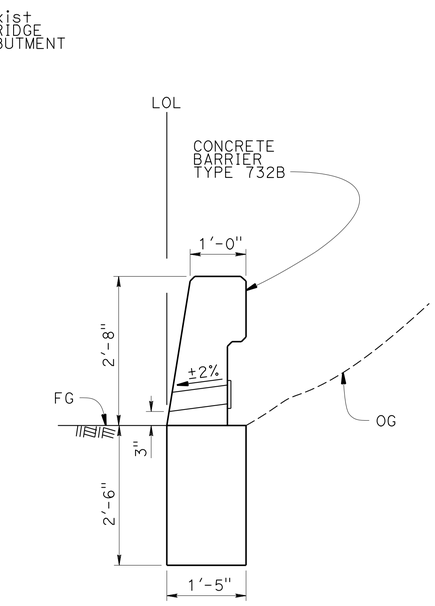


## SECTION C-C

¾" = 1'-0"

NOTES:

1. See "ROADWAY PLANS" for work location.
2. Holes used for fastening existing MBGR must be mortar filled, unless holes were cast using pipe sleeves.
3. Existing barrier heights vary. Where existing barrier height is more than 2'-8", transition barrier height to 2'-8" @ 4:1 slope.
4. See Standard Plan B11-55 for details of Concrete Barrier Type 732B.
5. Install 4"ø weep holes in Type 732B along entire length at 25'-0" center to center. See Standard Plans "BRIDGE DETAILS B0-3, BRIDGE DETAIL 3-1", for weep hole details.

LEGEND:

-·-·-·-·- Indicates existing

——— Indicates new structure

THE CONTRACTOR MUST VERIFY ALL CONTROLLING FIELD DIMENSIONS BEFORE ORDERING OR FABRICATING ANY MATERIAL.

# CONSTRUCTION DETAILS

C-18

BRANCH CHIEF DAVID A. NEUMANN

| | BY | CHECKED |
|---|---|---|
| DESIGN | YU SONG | VICTOR LOPEZ |
| DETAILS | BOB EDWARDS | YU SONG |
| QUANTITIES | YU SONG | VICTOR LOPEZ |

STATE OF CALIFORNIA DEPARTMENT OF TRANSPORTATION

DIVISION OF ENGINEERING SERVICES DESIGN AND TECHNICAL SERVICES SPECIAL DESIGNS BRANCH B

BRIDGE NO. N/A

POST MILE R17.876

CONCRETE BARRIER TRANSITION

TYPE 732B BARRIER (LOCATION 45-DEPARTURE END)

FILE => 1212000121ga018.dgn
USERNAME => s129866 DATE PLOTTED => 30-AUG-2016 TIME PLOTTED => 14:21

ORIGINAL SCALE IN INCHES FOR REDUCED PLANS 0 1 2 3

UNIT: 3619
PROJECT NUMBER & PHASE: 1212000121-1 CONTRACT NO.: 12-0M6101

DISREGARD PRINTS BEARING EARLIER REVISION DATES

REVISION DATES: 04-23-15 4-11-16 5-18-16 8-19-16

SHEET 6 OF 9

| DIST | COUNTY | ROUTE | POST MILES TOTAL PROJECT | SHEET No. | TOTAL SHEETS |
|---|---|---|---|---|---|
| 12 | Ora | 55, 57, 91 | 17.5/17.9,15.2/16.0, 5.8/6.8,8.7/R9.5 | 30 | 95 |

REGISTERED CIVIL ENGINEER 5-13-16 DATE

07-25-16
PLANS APPROVAL DATE

REGISTERED PROFESSIONAL ENGINEER YU SONG No. C71687 Exp. 12/31/17 CIVIL STATE OF CALIFORNIA

*The State of California or its officers or agents shall not be responsible for the accuracy or completeness of scanned copies of this plan sheet.*

LOCATION TABLE FOR TYPE 60C CONCRETE BARRIER

| BRIDGE No. | BRIDGE NAME | ROUTE | POST MILE | DIRECTION | APPROACH END | DEPARTURE END | LENGTH | TOTAL LENGTH | PLAN TYPE |
|---|---|---|---|---|---|---|---|---|---|
| 55-0493R | E91/91-55 FASTTRACK SEPARATION | 91 | R9.366 | EB LEFT | | 1 | 750'-0"± | 750'-0"± | A |

NOTES:

1. See "LOCATION TABLE" for work location.
2. Holes used for fastening existing MBGR must be mortar filled, unless holes were cast using pipe sleeves.
3. Remove existing MBGR, posts, and HMA dike from the left end of Bridge 55-0493R going eastbound along Route 91 to end of it.
4. Install Type 60C as shown following the alignment of the existing MBGR until it reaches the existing Type 50D barrier.

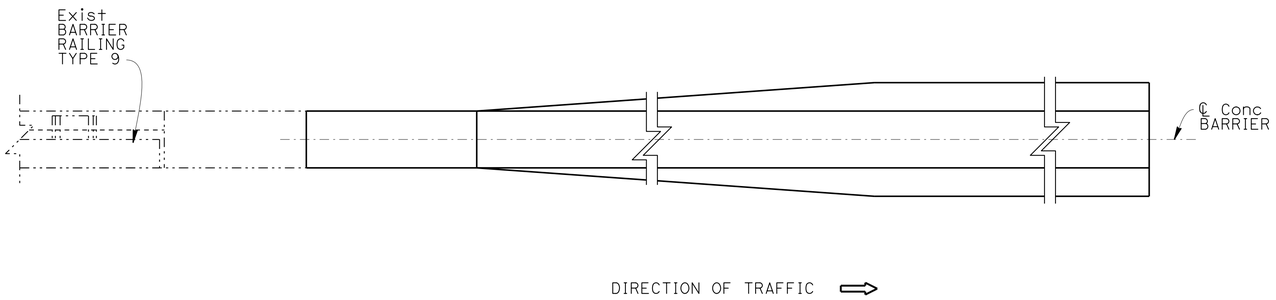


PLAN
¾" = 1'-0"

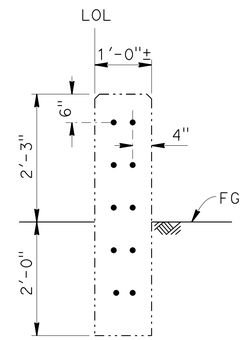


SECTION A-A
¾" = 1'-0"

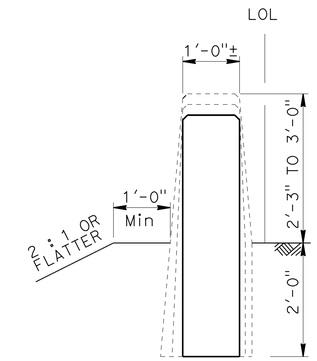


SECTION B-B
¾" = 1'-0"

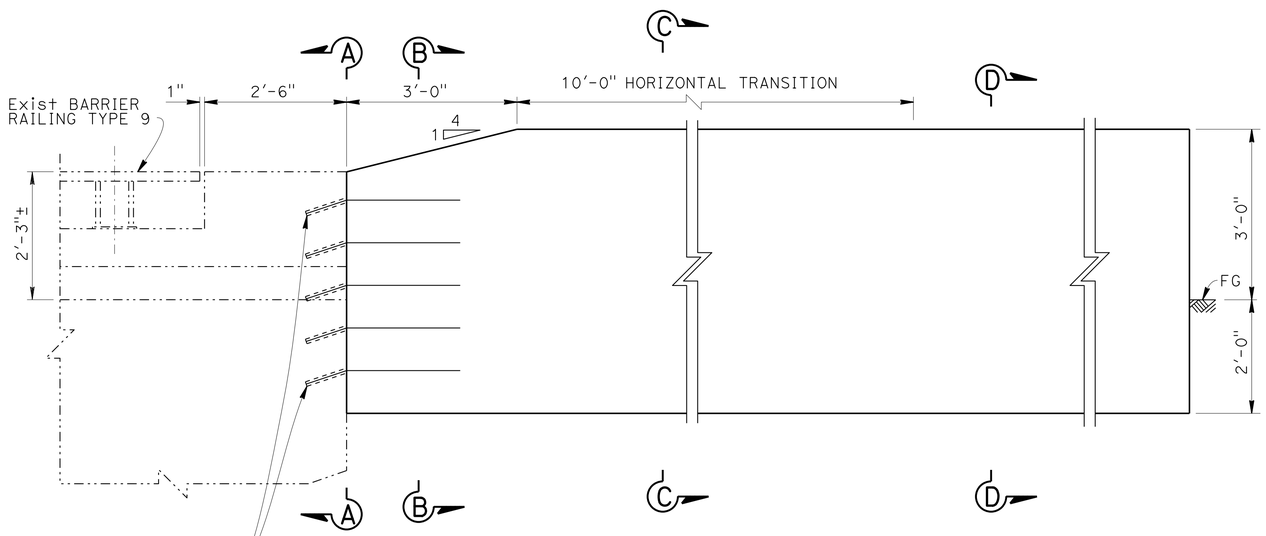


ELEVATION
¾" = 1'-0"

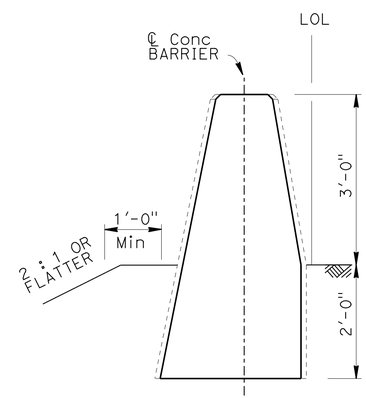


SECTION C-C
¾" = 1'-0"

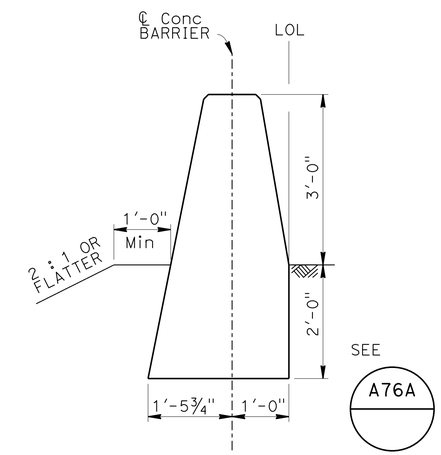


SECTION D-D
(TYPE 60C)
¾" = 1'-0"

THE CONTRACTOR MUST VERIFY ALL CONTROLLING FIELD DIMENSIONS BEFORE ORDERING OR FABRICATING ANY MATERIAL.

LEGEND:

Indicates existing

Indicates new structure

# CONSTRUCTION DETAILS

C-19

| BRANCH CHIEF | DAVID A. NEUMANN |
|---|---|

| | BY | CHECKED |
|---|---|---|
| DESIGN | YU SONG | VICTOR LOPEZ |
| DETAILS | BOB EDWARDS | YU SONG |
| QUANTITIES | YU SONG | VICTOR LOPEZ |

STATE OF CALIFORNIA
DEPARTMENT OF TRANSPORTATION

DIVISION OF ENGINEERING SERVICES
DESIGN AND TECHNICAL SERVICES
SPECIAL DESIGNS BRANCH B

BRIDGE NO. 55-0493R
POST MILE R9.366

CONCRETE BARRIER TRANSITION
TYPE 60C BARRIER (LOCATION 46)

STRUCTURES DESIGN DETAIL SHEET (ENGLISH) (REV. 09-01-10)

ORIGINAL SCALE IN INCHES FOR REDUCED PLANS 0 1 2 3

UNIT: 3619
PROJECT NUMBER & PHASE: 1212000121-1
CONTRACT NO.: 12-0M6101

DISREGARD PRINTS BEARING EARLIER REVISION DATES

REVISION DATES: 04-22-15 4-11-16 5-13-16 3-16-16

SHEET 4 OF 9

FILE => 1212000121ga019.dgn

USERNAME => s129866 DATE PLOTTED => 30-AUG-2016 TIME PLOTTED => 14:21

| Dist | COUNTY | ROUTE | POST MILES TOTAL PROJECT | SHEET No. | TOTAL SHEETS |
|---|---|---|---|---|---|
| 12 | Ora | 55, 57, 91 | 17.5/17.9; 15.2/16.0 5.8/6.8; 8.7/R9.5 | 31 | 95 |

Brandon Tran 07-26-16
REGISTERED CIVIL ENGINEER DATE

07-25-16
PLANS APPROVAL DATE

REGISTERED PROFESSIONAL ENGINEER
BRANDON TRAN
No. C58283
Exp. 6-30-18
CIVIL
STATE OF CALIFORNIA

*THE STATE OF CALIFORNIA OR ITS OFFICERS OR AGENTS SHALL NOT BE RESPONSIBLE FOR THE ACCURACY OR COMPLETENESS OF SCANNED COPIES OF THIS PLAN SHEET.*

## NOTES:

1. FOR ACCURATE RIGHT OF WAY DATA, CONTACT RIGHT OF WAY ENGINEERING AT THE DISTRICT OFFICE.
2. LOCATIONS OF UTILITY FACILITIES ON THESE PLANS ARE APPROXIMATE AND SHALL BE VERIFIED BY THE CONTRACTOR PRIOR TO CONSTRUCTION.
3. UTILITY OWNERSHIP:
   - GAS - SOUTHERN CALIFORNIA GAS (SCG)
   - WATER - CITY OF ANAHEIM (COA), METROPOLITAN WATER DISTRICT (MWD), ANAHEIM UNION WATER
   - ELECTRIC - SOUTHERN CALIFORNIA EDISON (SCE)
   - SEWER - ORANGE COUNTY SANITATION DISTRICT (OCSD), CITY OF ANAHEIM (COA)
   - FIBER OPTIC CABLE - CALTRANS
   - TELEPHONE - AMERICAN TELEPHONE & TELEGRAPH (AT&T)

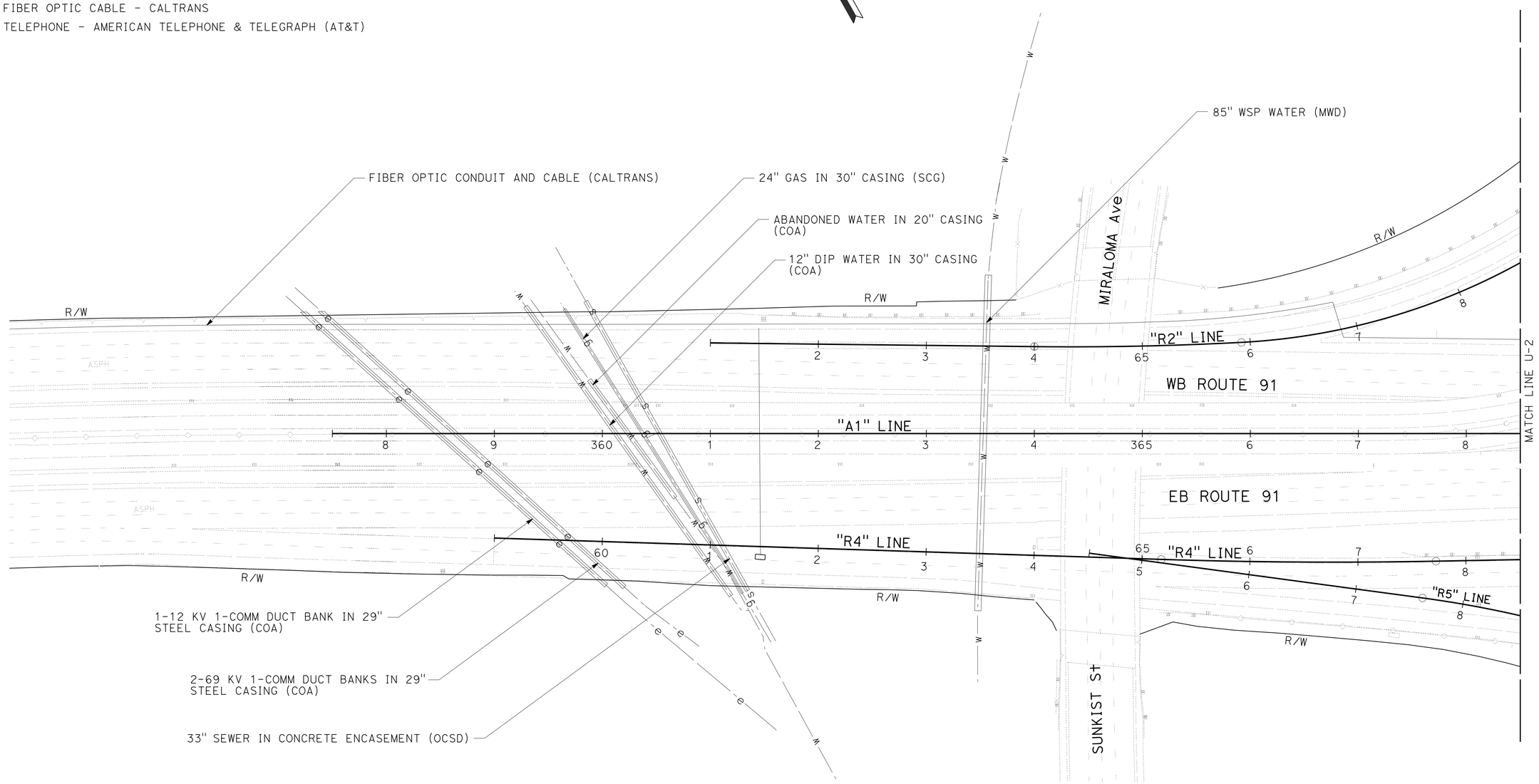


# UTILITY PLAN

SCALE 1" = 50'

U-1

*APPROVED FOR UTILITY INFORMATION ONLY*

STATE OF CALIFORNIA - DEPARTMENT OF TRANSPORTATION
Caltrans
DESIGN DIVISION

FUNCTIONAL SUPERVISOR: CHRISTOPHER H. LE
CALCULATED-DESIGNED BY: BRANDON TRAN
CHECKED BY: CHRISTOPHER H. LE
REVISED BY
DATE REVISED

LAST REVISION 07-12-16
DATE PLOTTED => 30-AUG-2016
TIME PLOTTED => 14:21

| Dist | COUNTY | ROUTE | POST MILES TOTAL PROJECT | SHEET No. | TOTAL SHEETS |
|---|---|---|---|---|---|
| 12 | Ora | 55, 57, 91 | 17.5/17.9; 15.2/16.0 5.8/6.8; 8.7/R9.5 | 32 | 95 |

Brandon Tran 07-26-16
REGISTERED CIVIL ENGINEER DATE

07-25-16
PLANS APPROVAL DATE

REGISTERED PROFESSIONAL ENGINEER
BRANDON TRAN
No. C58283
Exp. 6-30-18
CIVIL
STATE OF CALIFORNIA

*THE STATE OF CALIFORNIA OR ITS OFFICERS OR AGENTS SHALL NOT BE RESPONSIBLE FOR THE ACCURACY OR COMPLETENESS OF SCANNED COPIES OF THIS PLAN SHEET.*

NOTE:

FOR ACCURATE RIGHT OF WAY DATA, CONTACT RIGHT OF WAY ENGINEERING AT THE DISTRICT OFFICE.

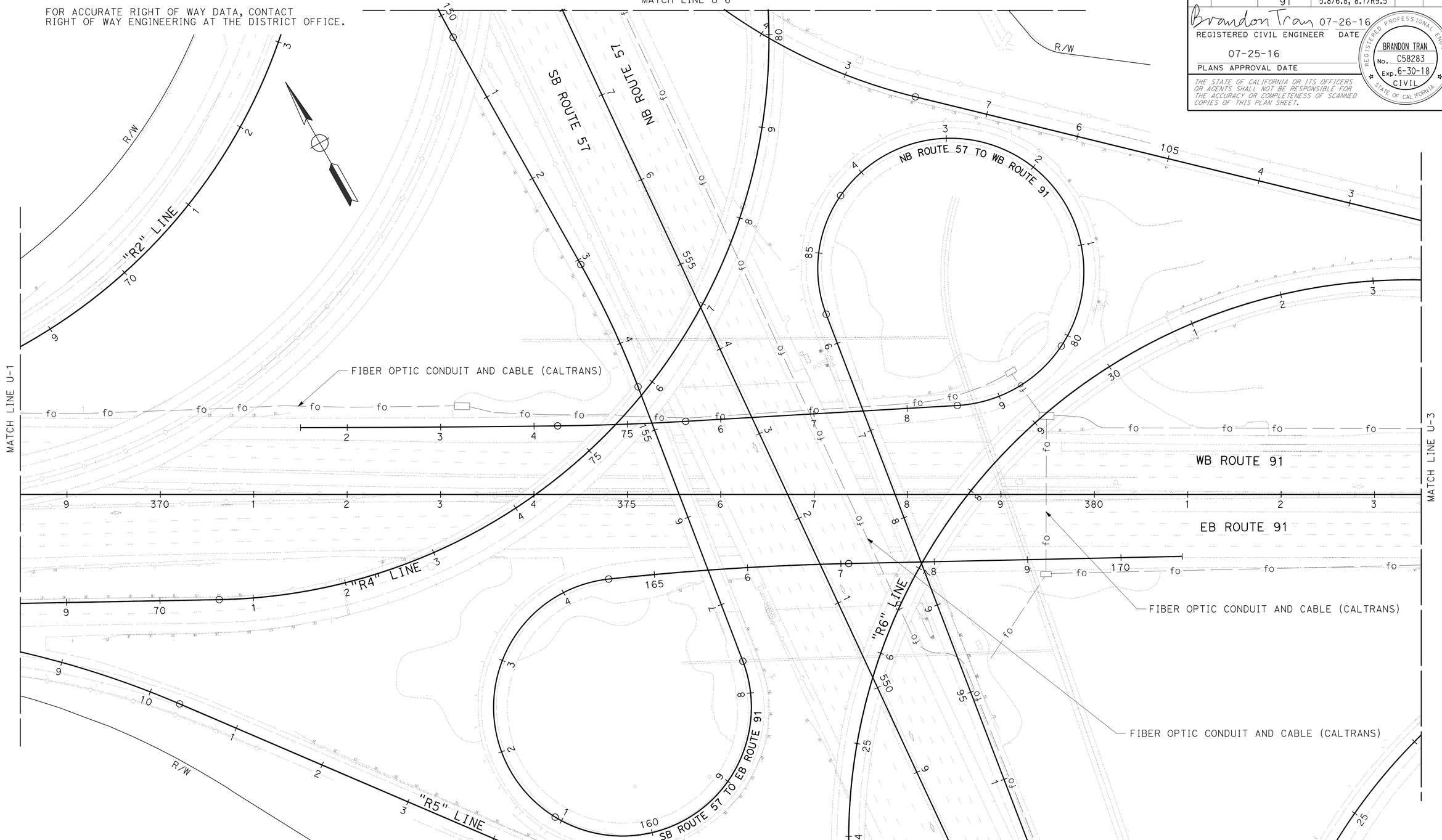


# UTILITY PLAN

SCALE 1" = 50'

U-2

*APPROVED FOR UTILITY INFORMATION ONLY*

STATE OF CALIFORNIA - DEPARTMENT OF TRANSPORTATION
Caltrans
DESIGN DIVISION

FUNCTIONAL SUPERVISOR: CHRISTOPHER H. LE
CALCULATED-DESIGNED BY: BRANDON TRAN
CHECKED BY: CHRISTOPHER H. LE
REVISED BY
DATE REVISED

LAST REVISION 07-28-16
DATE PLOTTED => 30-AUG-2016
TIME PLOTTED => 14:21

| Dist | COUNTY | ROUTE | POST MILES TOTAL PROJECT | SHEET No. | TOTAL SHEETS |
|---|---|---|---|---|---|
| 12 | Ora | 55, 57, 91 | 17.5/17.9; 15.2/16.0 5.8/6.8; 8.7/R9.5 | 33 | 95 |

Brandon Tran 07-26-16
REGISTERED CIVIL ENGINEER DATE

07-25-16
PLANS APPROVAL DATE

REGISTERED PROFESSIONAL ENGINEER
BRANDON TRAN
No. C58283
Exp. 6-30-18
CIVIL
STATE OF CALIFORNIA

*THE STATE OF CALIFORNIA OR ITS OFFICERS OR AGENTS SHALL NOT BE RESPONSIBLE FOR THE ACCURACY OR COMPLETENESS OF SCANNED COPIES OF THIS PLAN SHEET.*

NOTE:

FOR ACCURATE RIGHT OF WAY DATA, CONTACT RIGHT OF WAY ENGINEERING AT THE DISTRICT OFFICE.

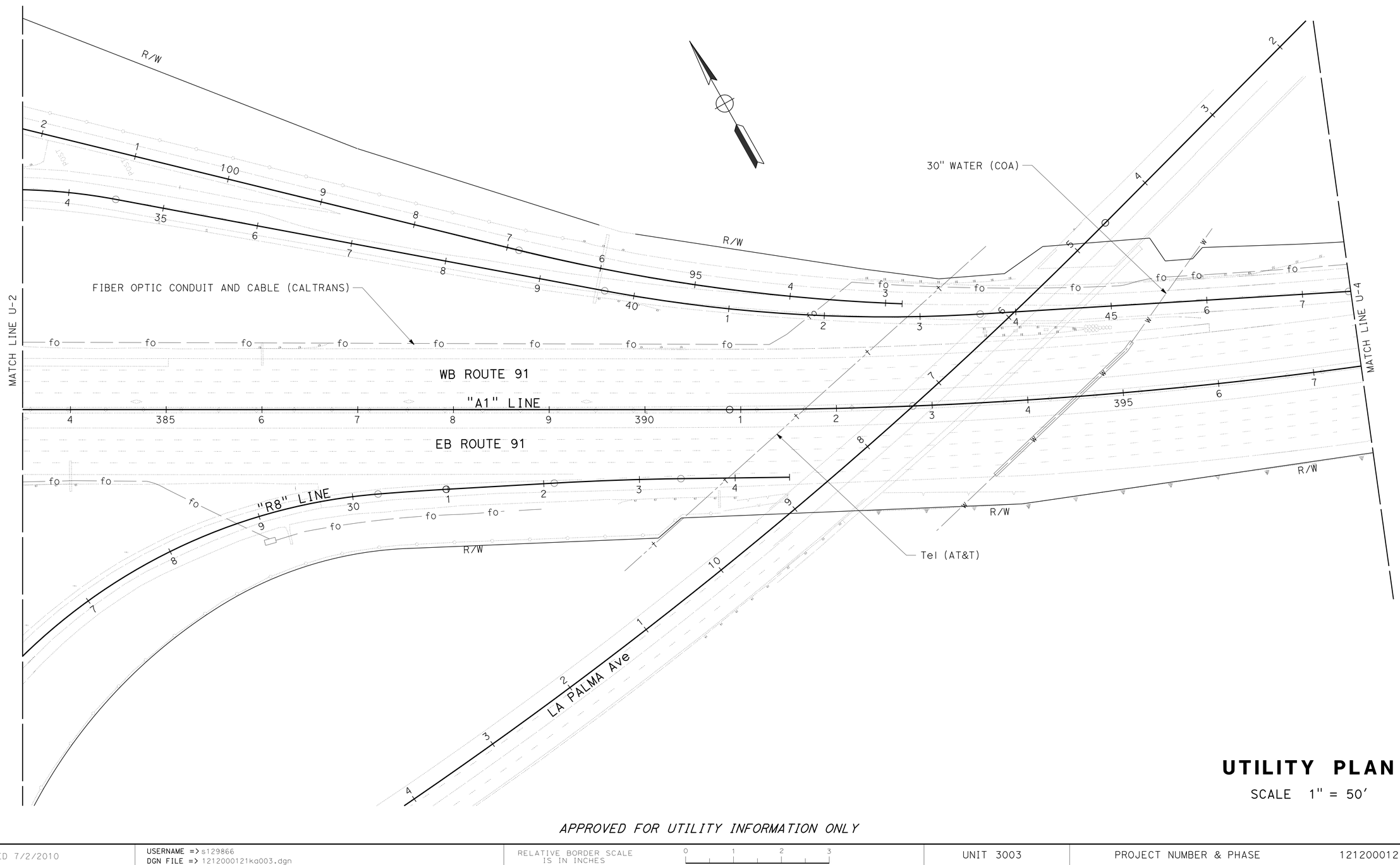


# UTILITY PLAN

SCALE 1" = 50'

U-3

*APPROVED FOR UTILITY INFORMATION ONLY*

STATE OF CALIFORNIA - DEPARTMENT OF TRANSPORTATION
Caltrans DESIGN DIVISION

FUNCTIONAL SUPERVISOR: CHRISTOPHER H. LE
CALCULATED-DESIGNED BY: BRANDON TRAN
CHECKED BY: CHRISTOPHER H. LE
REVISED BY
DATE REVISED

LAST REVISION 07-12-16
DATE PLOTTED => 30-AUG-2016
TIME PLOTTED => 14:21

| Dist | COUNTY | ROUTE | POST MILES TOTAL PROJECT | SHEET No. | TOTAL SHEETS |
|---|---|---|---|---|---|
| 12 | Ora | 55, 57, 91 | 17.5/17.9; 15.2/16.0 5.8/6.8; 8.7/R9.5 | 34 | 95 |

Brandon Tran 07-26-16
REGISTERED CIVIL ENGINEER DATE

07-25-16
PLANS APPROVAL DATE

REGISTERED PROFESSIONAL ENGINEER
BRANDON TRAN
No. C58283
Exp. 6-30-18
CIVIL
STATE OF CALIFORNIA

*THE STATE OF CALIFORNIA OR ITS OFFICERS OR AGENTS SHALL NOT BE RESPONSIBLE FOR THE ACCURACY OR COMPLETENESS OF SCANNED COPIES OF THIS PLAN SHEET.*

NOTE:

FOR ACCURATE RIGHT OF WAY DATA, CONTACT
RIGHT OF WAY ENGINEERING AT THE DISTRICT OFFICE.

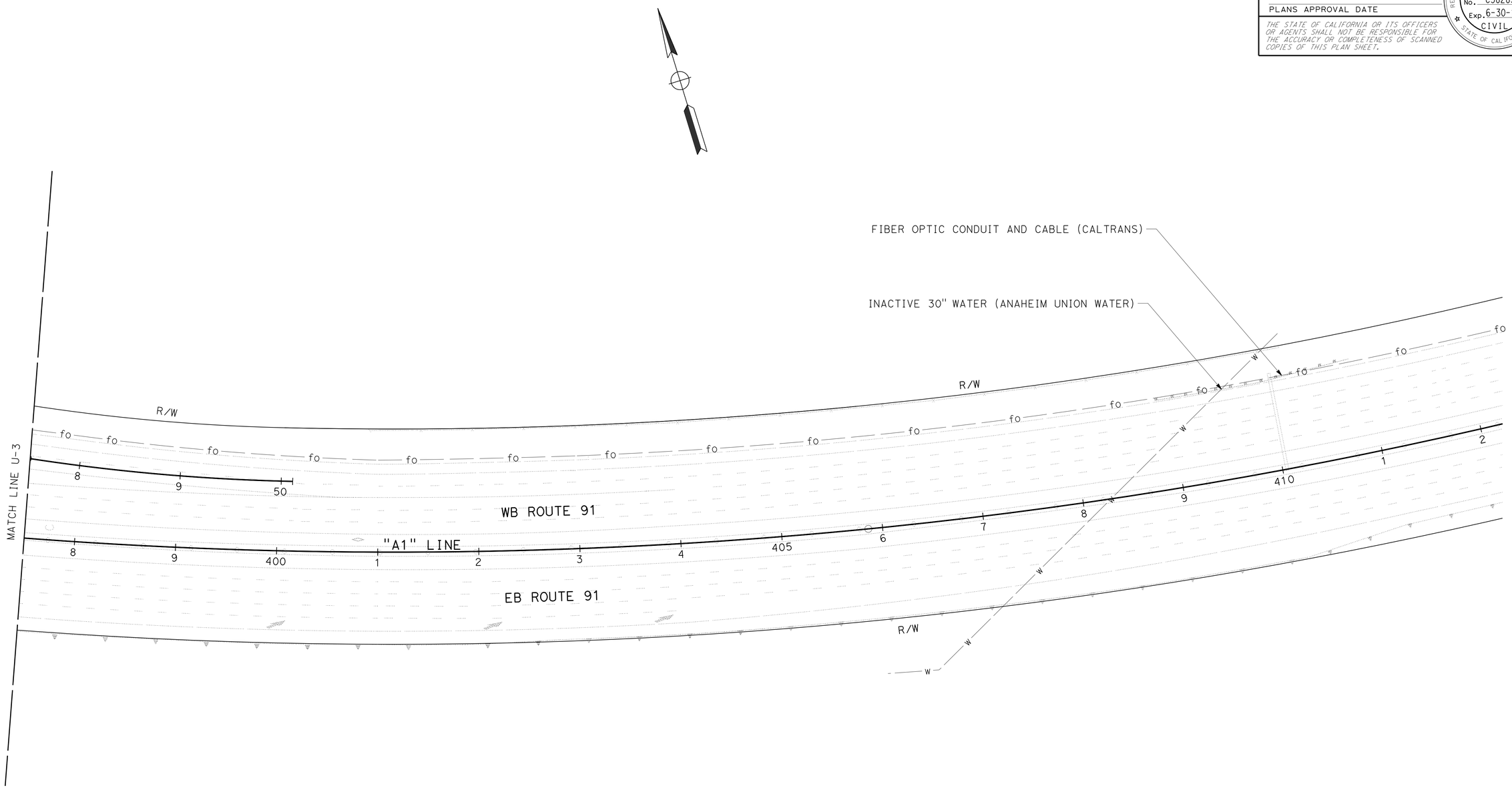


# UTILITY PLAN

SCALE 1" = 50'

**U-4**

*APPROVED FOR UTILITY INFORMATION ONLY*

STATE OF CALIFORNIA - DEPARTMENT OF TRANSPORTATION
Caltrans® DESIGN DIVISION

FUNCTIONAL SUPERVISOR: CHRISTOPHER H. LE
CALCULATED-DESIGNED BY: BRANDON TRAN
CHECKED BY: CHRISTOPHER H. LE
REVISED BY
DATE REVISED

LAST REVISION 07-28-16
DATE PLOTTED => 30-AUG-2016
TIME PLOTTED => 14:21

| Dist | COUNTY | ROUTE | POST MILES TOTAL PROJECT | SHEET No. | TOTAL SHEETS |
|---|---|---|---|---|---|
| 12 | Ora | 55, 57, 91 | 17.5/17.9; 15.2/16.0 5.8/6.8; 8.7/R9.5 | 35 | 95 |

Brandon Tran 07-26-16
REGISTERED CIVIL ENGINEER DATE

07-25-16
PLANS APPROVAL DATE

REGISTERED PROFESSIONAL ENGINEER
BRANDON TRAN
No. C58283
Exp. 6-30-18
CIVIL
STATE OF CALIFORNIA

*THE STATE OF CALIFORNIA OR ITS OFFICERS OR AGENTS SHALL NOT BE RESPONSIBLE FOR THE ACCURACY OR COMPLETENESS OF SCANNED COPIES OF THIS PLAN SHEET.*

NOTE:

FOR ACCURATE RIGHT OF WAY DATA, CONTACT RIGHT OF WAY ENGINEERING AT THE DISTRICT OFFICE.

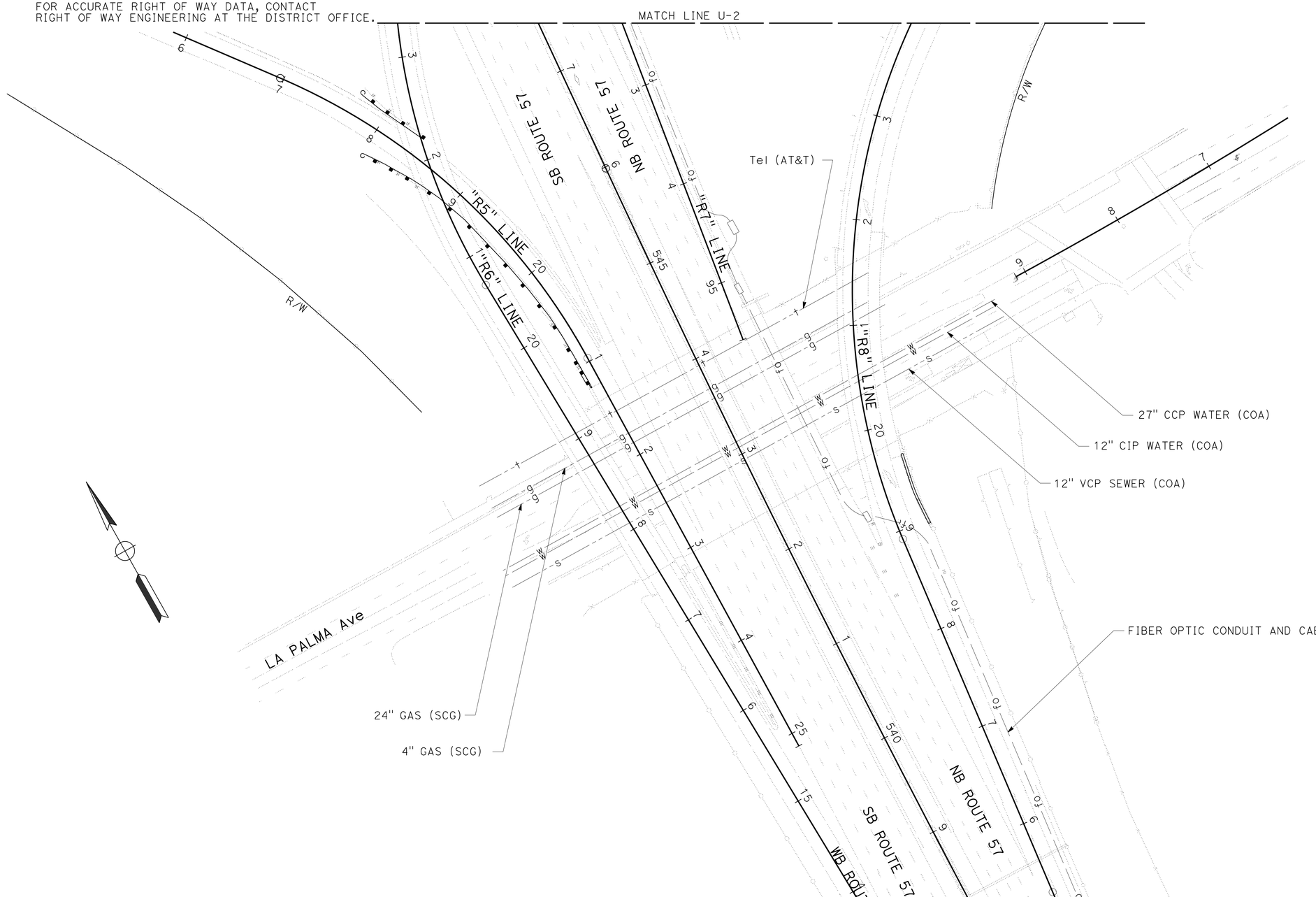


*APPROVED FOR UTILITY INFORMATION ONLY*

# UTILITY PLAN

SCALE 1" = 50'

**U-5**

STATE OF CALIFORNIA - DEPARTMENT OF TRANSPORTATION
Caltrans
DESIGN DIVISION

FUNCTIONAL SUPERVISOR: CHRISTOPHER H. LE
CALCULATED-DESIGNED BY: BRANDON TRAN
CHECKED BY: CHRISTOPHER H. LE
REVISED BY
DATE REVISED

LAST REVISION 07-28-16
DATE PLOTTED => 30-AUG-2016
TIME PLOTTED => 14:21

| Dist | COUNTY | ROUTE | POST MILES TOTAL PROJECT | SHEET No. | TOTAL SHEETS |
|---|---|---|---|---|---|
| 12 | Ora | 55, 57, 91 | 17.5/17.9; 15.2/16.0 5.8/6.8; 8.7/R9.5 | 36 | 95 |

Brandon Tran 07-26-16
REGISTERED CIVIL ENGINEER DATE

07-25-16
PLANS APPROVAL DATE

REGISTERED PROFESSIONAL ENGINEER
BRANDON TRAN
No. C58283
Exp. 6-30-18
CIVIL
STATE OF CALIFORNIA

*THE STATE OF CALIFORNIA OR ITS OFFICERS OR AGENTS SHALL NOT BE RESPONSIBLE FOR THE ACCURACY OR COMPLETENESS OF SCANNED COPIES OF THIS PLAN SHEET.*

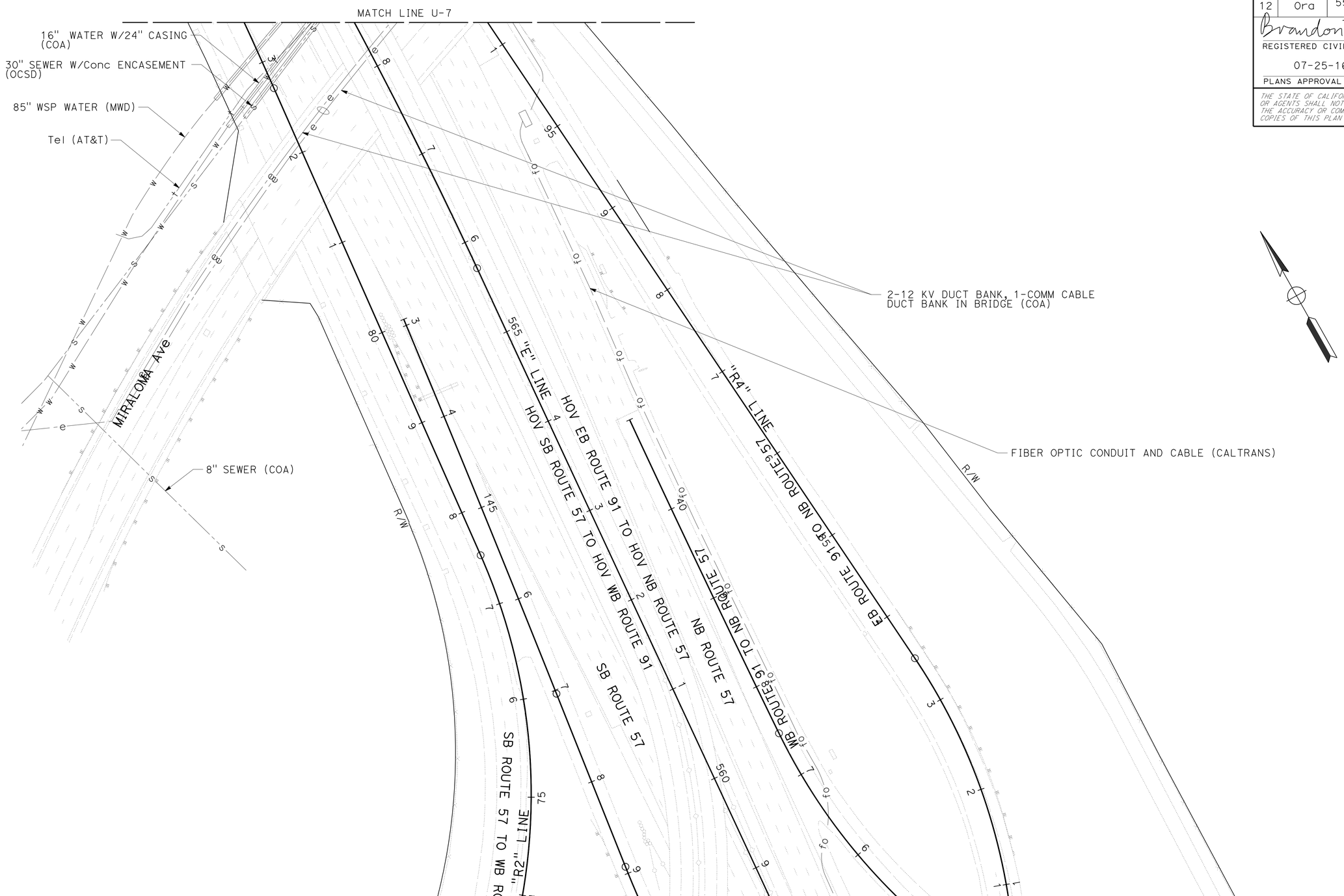


NOTE:

FOR ACCURATE RIGHT OF WAY DATA, CONTACT RIGHT OF WAY ENGINEERING AT THE DISTRICT OFFICE.

*APPROVED FOR UTILITY INFORMATION ONLY*

# UTILITY PLAN

SCALE 1" = 50'

**U-6**

STATE OF CALIFORNIA - DEPARTMENT OF TRANSPORTATION
Caltrans
DESIGN DIVISION

FUNCTIONAL SUPERVISOR: CHRISTOPHER H. LE
CALCULATED-DESIGNED BY: BRANDON TRAN
CHECKED BY: CHRISTOPHER H. LE
REVISED BY
DATE REVISED

LAST REVISION 07-28-16 | DATE PLOTTED => 30-AUG-2016 | TIME PLOTTED => 14:21

| Dist | COUNTY | ROUTE | POST MILES TOTAL PROJECT | SHEET No. | TOTAL SHEETS |
|---|---|---|---|---|---|
| 12 | Ora | 55, 57, 91 | 17.5/17.9; 15.2/16.0 5.8/6.8; 8.7/R9.5 | 37 | 95 |

Brandon Tran 07-26-16
REGISTERED CIVIL ENGINEER DATE

07-25-16
PLANS APPROVAL DATE

REGISTERED PROFESSIONAL ENGINEER
BRANDON TRAN
No. C58283
Exp. 6-30-18
CIVIL
STATE OF CALIFORNIA

*THE STATE OF CALIFORNIA OR ITS OFFICERS OR AGENTS SHALL NOT BE RESPONSIBLE FOR THE ACCURACY OR COMPLETENESS OF SCANNED COPIES OF THIS PLAN SHEET.*

NOTE:

FOR ACCURATE RIGHT OF WAY DATA, CONTACT RIGHT OF WAY ENGINEERING AT THE DISTRICT OFFICE.

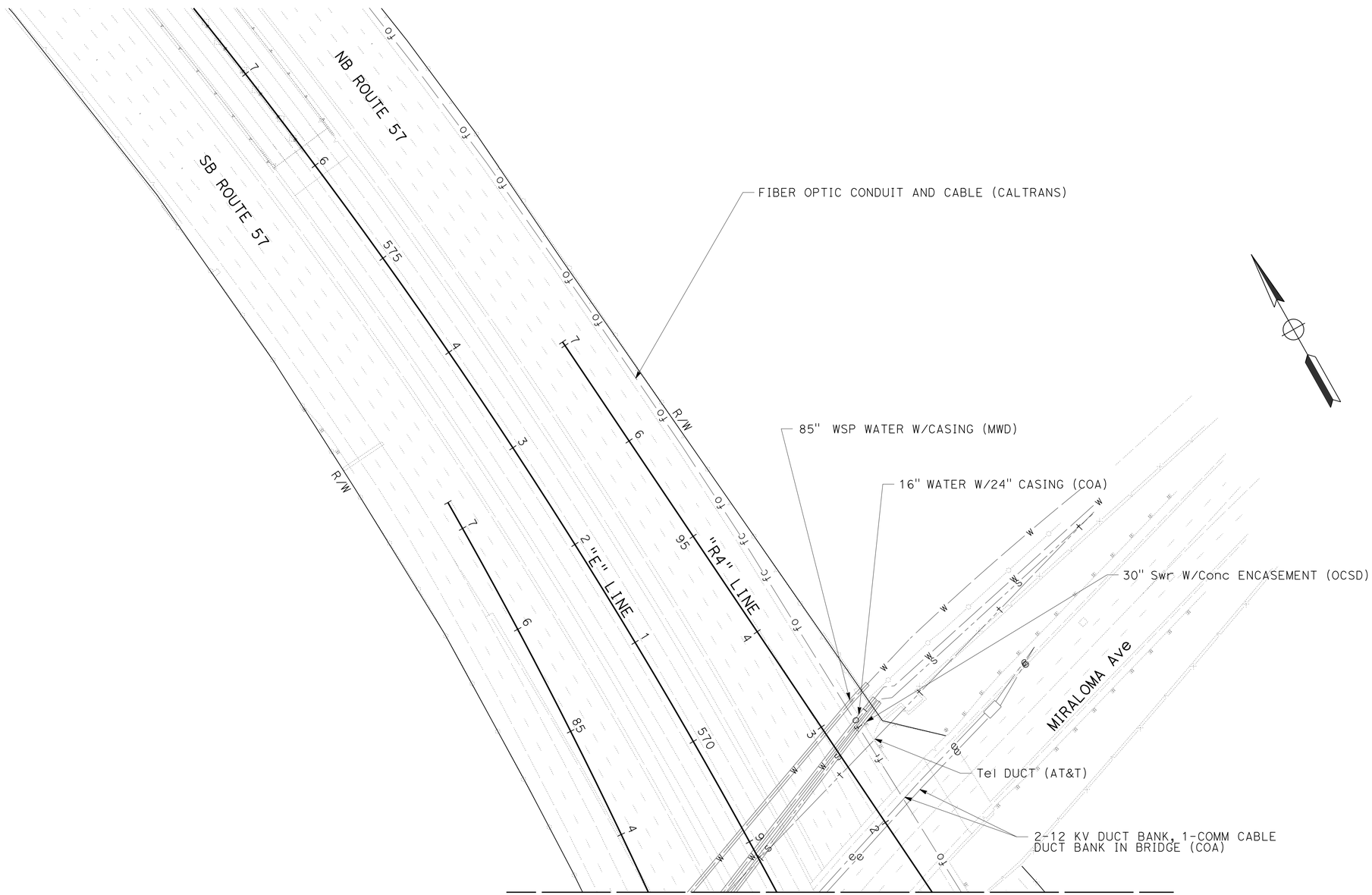


# UTILITY PLAN

SCALE 1" = 50'

U-7

*APPROVED FOR UTILITY INFORMATION ONLY*

STATE OF CALIFORNIA - DEPARTMENT OF TRANSPORTATION
Caltrans
DESIGN DIVISION

FUNCTIONAL SUPERVISOR: CHRISTOPHER H. LE
CALCULATED-DESIGNED BY: BRANDON TRAN
CHECKED BY: CHRISTOPHER H. LE
REVISED BY
DATE REVISED

LAST REVISION 07-28-16
DATE PLOTTED => 30-AUG-2016
TIME PLOTTED => 14:21

| Dist | COUNTY | ROUTE | POST MILES TOTAL PROJECT | SHEET No. | TOTAL SHEETS |
|---|---|---|---|---|---|
| 12 | Ora | 55, 57, 91 | 17.5/17.9; 15.2/16.0 5.8/6.8; 8.7/R9.5 | 38 | 95 |

Brandon Tran 07-26-16
REGISTERED CIVIL ENGINEER DATE

07-25-16
PLANS APPROVAL DATE

REGISTERED PROFESSIONAL ENGINEER
BRANDON TRAN
No. C58283
Exp. 6-30-18
CIVIL
STATE OF CALIFORNIA

*THE STATE OF CALIFORNIA OR ITS OFFICERS OR AGENTS SHALL NOT BE RESPONSIBLE FOR THE ACCURACY OR COMPLETENESS OF SCANNED COPIES OF THIS PLAN SHEET.*

NOTE:

FOR ACCURATE RIGHT OF WAY DATA, CONTACT RIGHT OF WAY ENGINEERING AT THE DISTRICT OFFICE.

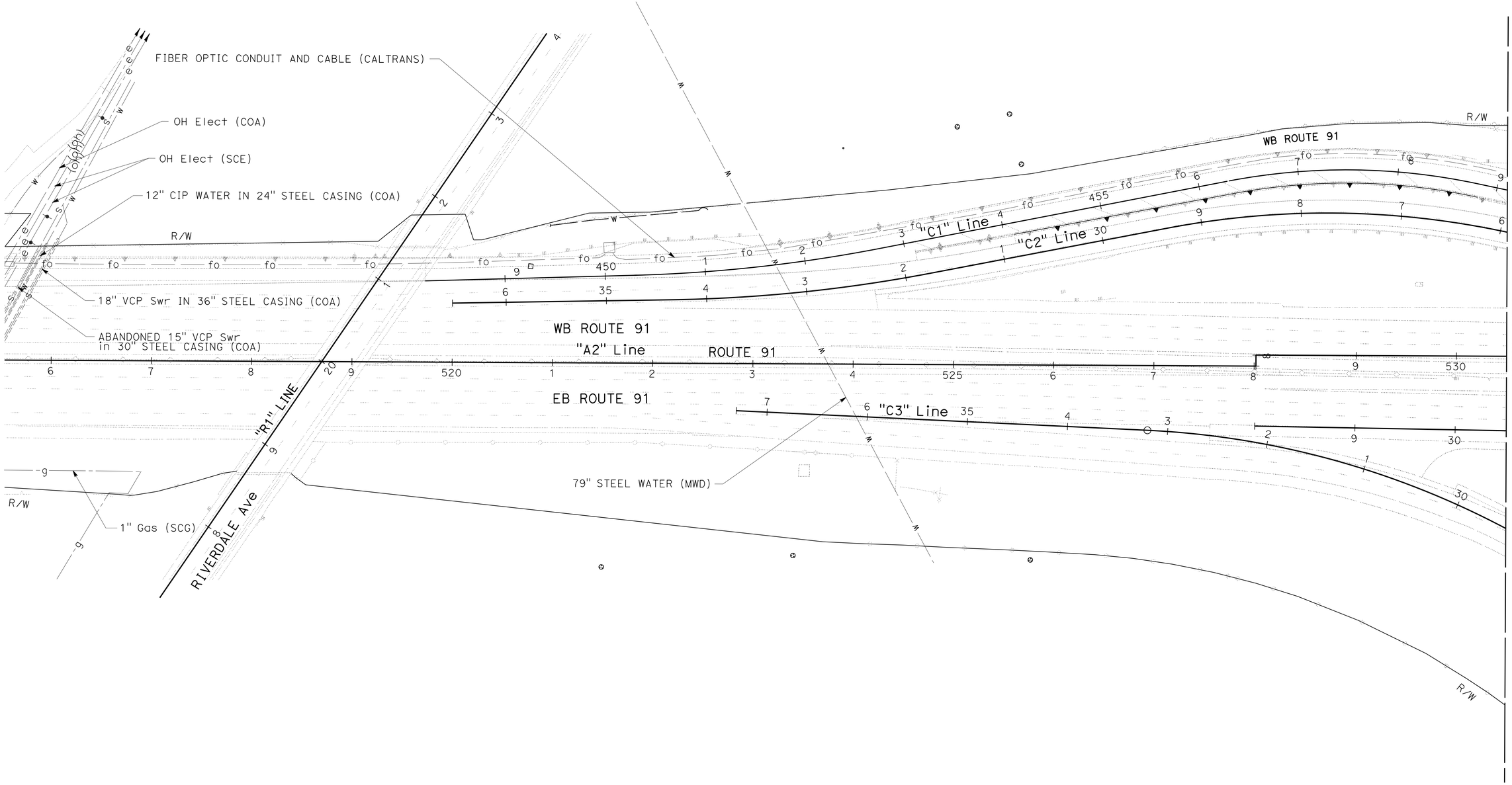


# UTILITY PLAN

SCALE 1" = 50'

U-8

*APPROVED FOR UTILITY INFORMATION ONLY*

STATE OF CALIFORNIA - DEPARTMENT OF TRANSPORTATION
Caltrans
DESIGN DIVISION

FUNCTIONAL SUPERVISOR: CHRISTOPHER H. LE
CALCULATED-DESIGNED BY: BRANDON TRAN
CHECKED BY: CHRISTOPHER H. LE
REVISED BY
DATE REVISED

LAST REVISION 07-28-16
DATE PLOTTED => 30-AUG-2016
TIME PLOTTED => 14:21

| Dist | COUNTY | ROUTE | POST MILES TOTAL PROJECT | SHEET No. | TOTAL SHEETS |
|---|---|---|---|---|---|
| 12 | Ora | 55, 57, 91 | 17.5/17.9; 15.2/16.0 5.8/6.8; 8.7/R9.5 | 39 | 95 |

Brandon Tran 07-26-16
REGISTERED CIVIL ENGINEER DATE

07-25-16
PLANS APPROVAL DATE

REGISTERED PROFESSIONAL ENGINEER
BRANDON TRAN
No. C58283
Exp. 6-30-16
CIVIL
STATE OF CALIFORNIA

*THE STATE OF CALIFORNIA OR ITS OFFICERS OR AGENTS SHALL NOT BE RESPONSIBLE FOR THE ACCURACY OR COMPLETENESS OF SCANNED COPIES OF THIS PLAN SHEET.*

NOTE:

FOR ACCURATE RIGHT OF WAY DATA, CONTACT RIGHT OF WAY ENGINEERING AT THE DISTRICT OFFICE.

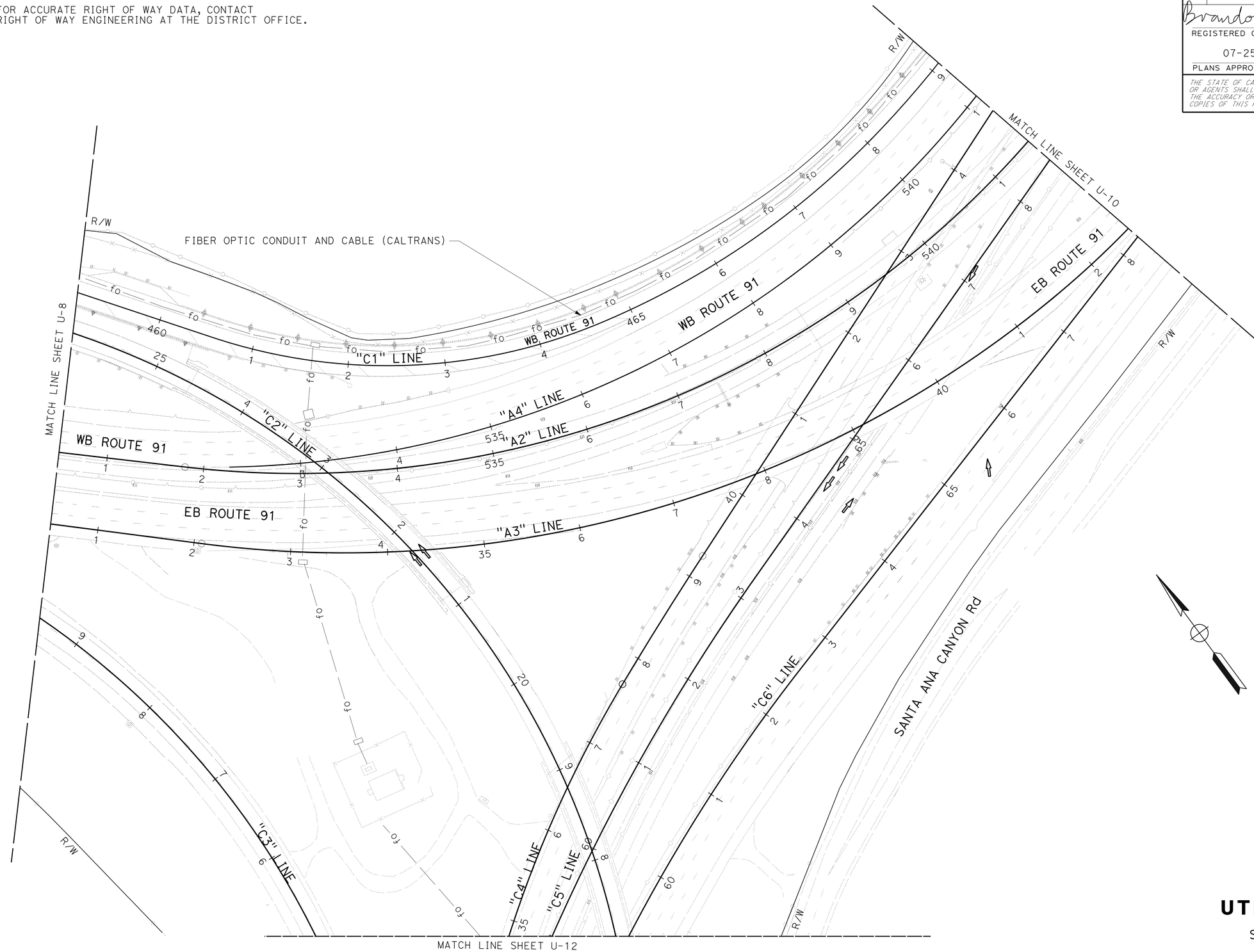


# UTILITY PLAN

SCALE 1" = 50'

U-9

*APPROVED FOR UTILITY INFORMATION ONLY*

STATE OF CALIFORNIA - DEPARTMENT OF TRANSPORTATION
Caltrans
DESIGN DIVISION

FUNCTIONAL SUPERVISOR: CHRISTOPHER H. LE
CALCULATED-DESIGNED BY: BRANDON TRAN
CHECKED BY: CHRISTOPHER H. LE
REVISED BY
DATE REVISED

LAST REVISION 07-28-16
DATE PLOTTED => 30-AUG-2016
TIME PLOTTED => 14:21

| Dist | COUNTY | ROUTE | POST MILES TOTAL PROJECT | SHEET No. | TOTAL SHEETS |
|---|---|---|---|---|---|
| 12 | Ora | 55, 57, 91 | 17.5/17.9; 15.2/16.0 5.8/6.8; 8.7/R9.5 | 40 | 95 |

Brandon Tran 07-26-16
REGISTERED CIVIL ENGINEER DATE

07-25-16
PLANS APPROVAL DATE

REGISTERED PROFESSIONAL ENGINEER
BRANDON TRAN
No. C58283
Exp. 6-30-18
CIVIL
STATE OF CALIFORNIA

*THE STATE OF CALIFORNIA OR ITS OFFICERS OR AGENTS SHALL NOT BE RESPONSIBLE FOR THE ACCURACY OR COMPLETENESS OF SCANNED COPIES OF THIS PLAN SHEET.*

NOTE:

FOR ACCURATE RIGHT OF WAY DATA, CONTACT RIGHT OF WAY ENGINEERING AT THE DISTRICT OFFICE.

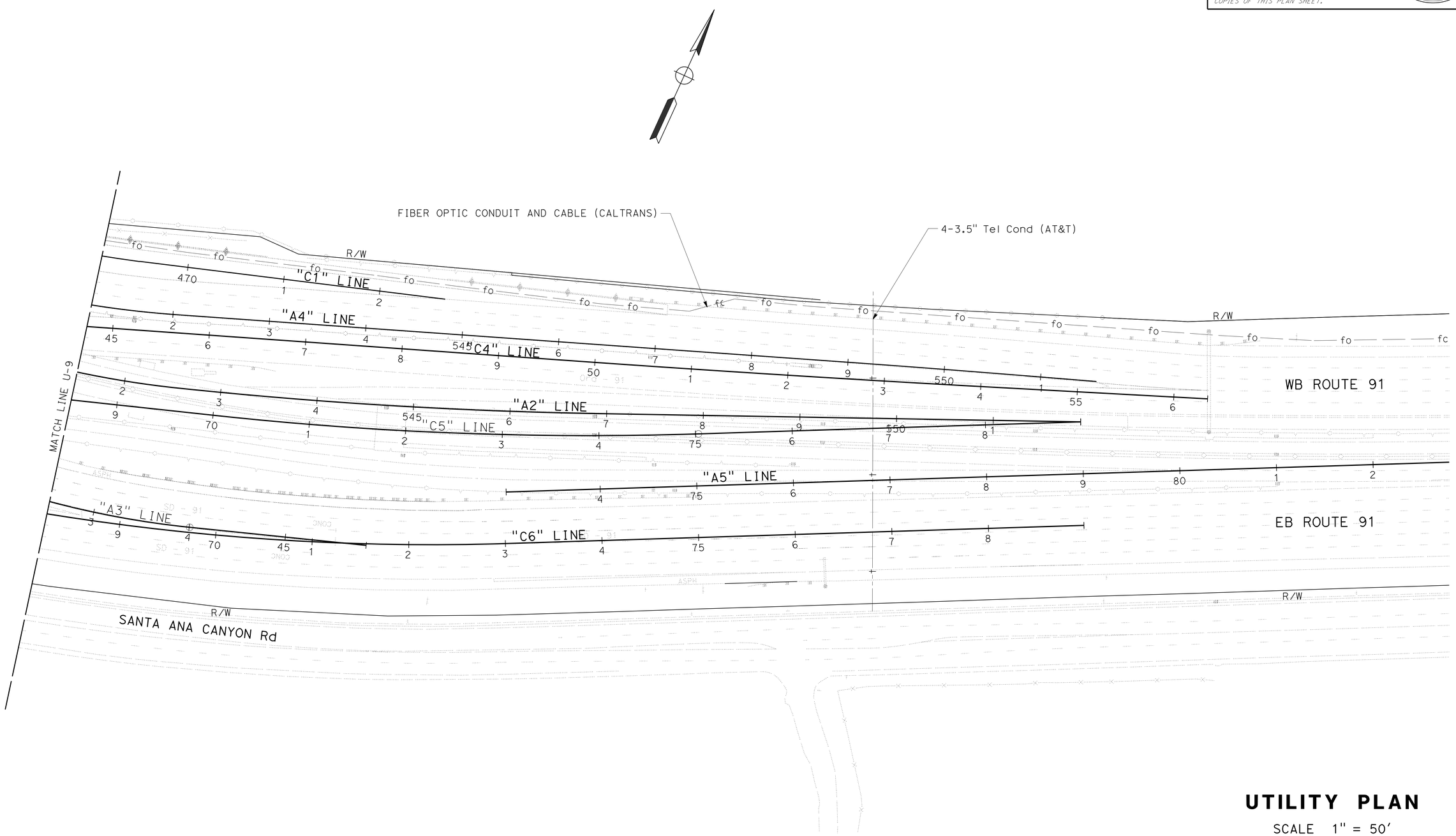


# UTILITY PLAN

SCALE 1" = 50'

**U-10**

*APPROVED FOR UTILITY INFORMATION ONLY*

STATE OF CALIFORNIA - DEPARTMENT OF TRANSPORTATION
Caltrans
DESIGN DIVISION

FUNCTIONAL SUPERVISOR: CHRISTOPHER H. LE
CALCULATED-DESIGNED BY: BRANDON TRAN
CHECKED BY: CHRISTOPHER H. LE
REVISED BY
DATE REVISED

LAST REVISION 07-28-16
DATE PLOTTED => 30-AUG-2016
TIME PLOTTED => 14:21

BORDER LAST REVISED 7/2/2010
USERNAME => s129866
DGN FILE => 1212000121ka010.dgn
RELATIVE BORDER SCALE IS IN INCHES 0 1 2 3
UNIT 3003
PROJECT NUMBER & PHASE 12120001211

| Dist | COUNTY | ROUTE | POST MILES TOTAL PROJECT | SHEET No. | TOTAL SHEETS |
|---|---|---|---|---|---|
| 12 | Ora | 55, 57, 91 | 17.5/17.9; 15.2/16.0 5.8/6.8; 8.7/R9.5 | 41 | 95 |

Brandon Tran 07-26-16
REGISTERED CIVIL ENGINEER DATE

07-25-16
PLANS APPROVAL DATE

REGISTERED PROFESSIONAL ENGINEER
BRANDON TRAN
No. C58283
Exp. 6-30-16
CIVIL
STATE OF CALIFORNIA

*THE STATE OF CALIFORNIA OR ITS OFFICERS OR AGENTS SHALL NOT BE RESPONSIBLE FOR THE ACCURACY OR COMPLETENESS OF SCANNED COPIES OF THIS PLAN SHEET.*

**NOTE:**

FOR ACCURATE RIGHT OF WAY DATA, CONTACT RIGHT OF WAY ENGINEERING AT THE DISTRICT OFFICE.

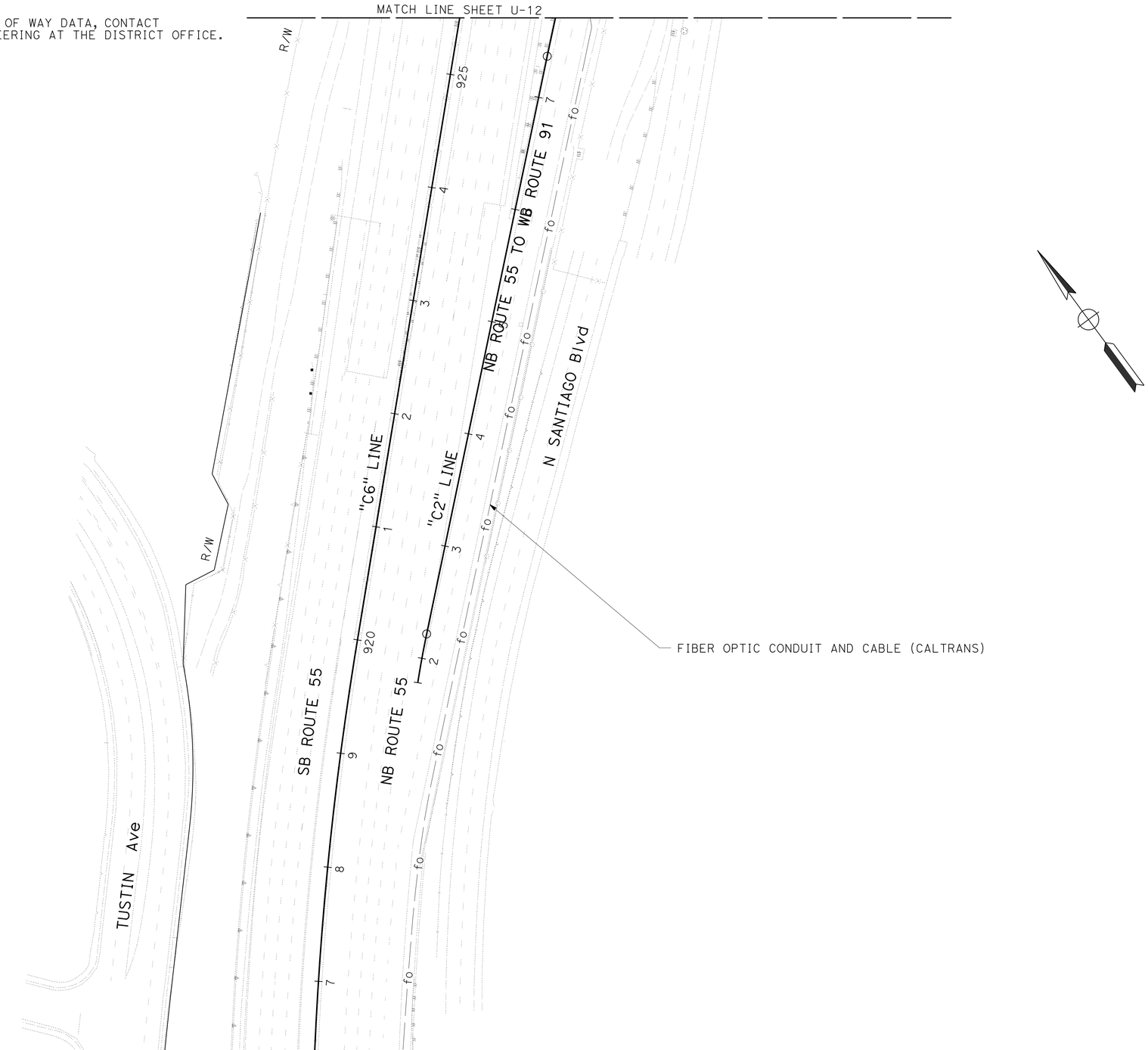


# UTILITY PLAN

SCALE 1" = 50'

**U-11**

*APPROVED FOR UTILITY INFORMATION ONLY*

STATE OF CALIFORNIA - DEPARTMENT OF TRANSPORTATION
Caltrans
**DESIGN DIVISION**

FUNCTIONAL SUPERVISOR: CHRISTOPHER H. LE
CALCULATED-DESIGNED BY: BRANDON TRAN
CHECKED BY: CHRISTOPHER H. LE
REVISED BY
DATE REVISED

LAST REVISION 07-28-16
DATE PLOTTED => 30-AUG-2016
TIME PLOTTED => 14:21

| Dist | COUNTY | ROUTE | POST MILES TOTAL PROJECT | SHEET No. | TOTAL SHEETS |
|---|---|---|---|---|---|
| 12 | Ora | 55, 57, 91 | 17.5/17.9; 15.2/16.0 5.8/6.8; 8.7/R9.5 | 42 | 95 |

Brandon Tran 07-26-16
REGISTERED CIVIL ENGINEER DATE

07-25-16
PLANS APPROVAL DATE

REGISTERED PROFESSIONAL ENGINEER
BRANDON TRAN
No. C58283
Exp. 6-30-16
CIVIL
STATE OF CALIFORNIA

*THE STATE OF CALIFORNIA OR ITS OFFICERS OR AGENTS SHALL NOT BE RESPONSIBLE FOR THE ACCURACY OR COMPLETENESS OF SCANNED COPIES OF THIS PLAN SHEET.*

NOTE:

FOR ACCURATE RIGHT OF WAY DATA, CONTACT RIGHT OF WAY ENGINEERING AT THE DISTRICT OFFICE.

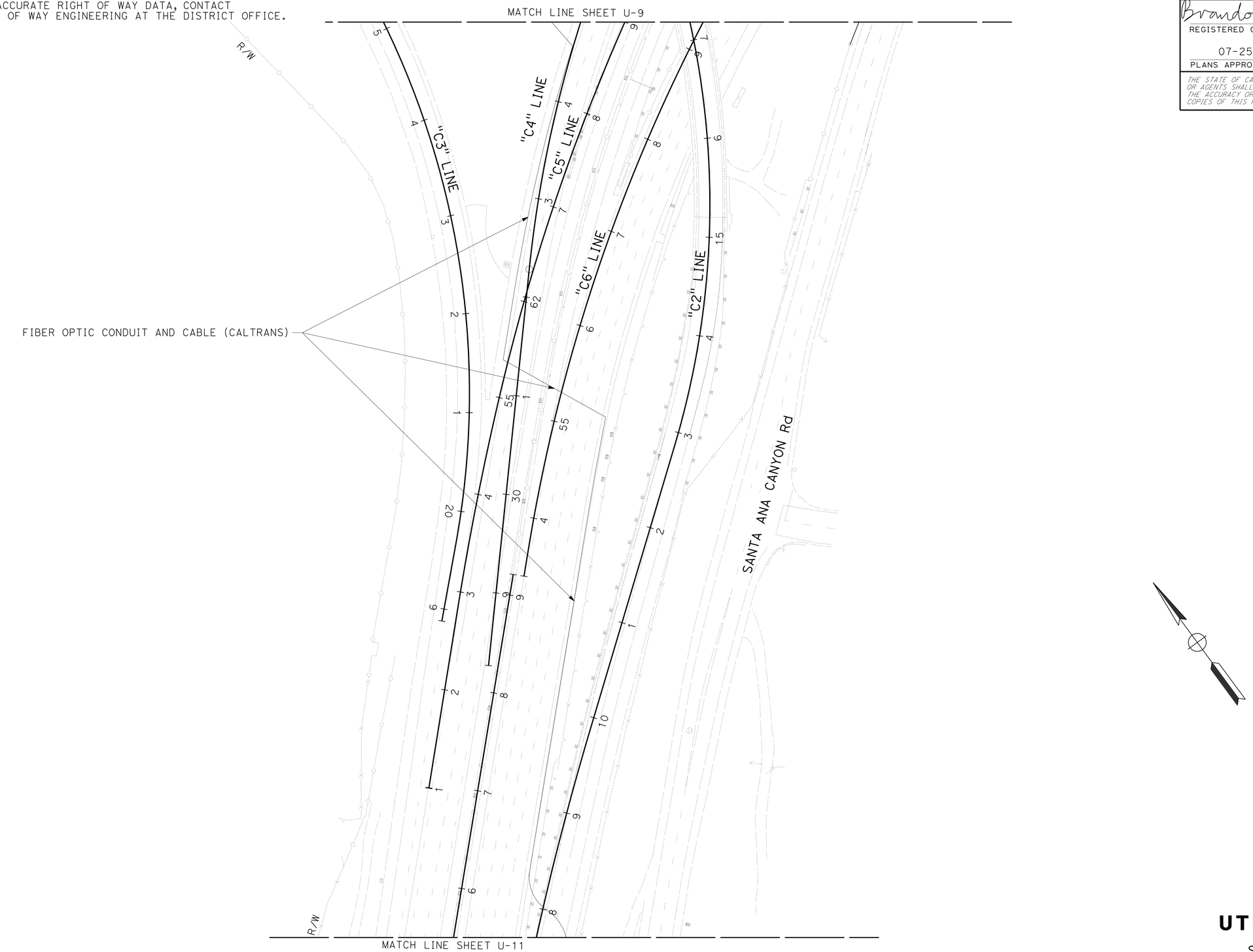


*APPROVED FOR UTILITY INFORMATION ONLY*

# UTILITY PLAN

SCALE 1" = 50'

**U-12**

STATE OF CALIFORNIA - DEPARTMENT OF TRANSPORTATION
Caltrans
**DESIGN DIVISION**

FUNCTIONAL SUPERVISOR: CHRISTOPHER H. LE
CALCULATED-DESIGNED BY: BRANDON TRAN
CHECKED BY: CHRISTOPHER H. LE
REVISED BY
DATE REVISED

LAST REVISION 07-12-16
DATE PLOTTED => 30-AUG-2016
TIME PLOTTED => 14:21

| Dist | COUNTY | ROUTE | POST MILES TOTAL PROJECT | SHEET No. | TOTAL SHEETS |
|---|---|---|---|---|---|
| 12 | Ora | 55, 57, 91 | 17.5/17.9; 15.2/16.0 5.8/6.8; 8.7/R9.5 | 43 | 95 |

kngnguyen 07-26-16
REGISTERED CIVIL ENGINEER DATE

07-25-16
PLANS APPROVAL DATE

REGISTERED PROFESSIONAL ENGINEER
KIMBERLY NGUYEN
No. C 64577
Exp. 6/30/17
CIVIL
STATE OF CALIFORNIA

*THE STATE OF CALIFORNIA OR ITS OFFICERS OR AGENTS SHALL NOT BE RESPONSIBLE FOR THE ACCURACY OR COMPLETENESS OF SCANNED COPIES OF THIS PLAN SHEET.*

## CONSTRUCTION AREA SIGNS (STATIONARY MOUNTED SIGNS)

| SIGN No. | SIGN CODE | PANEL SIZE | SIGN MESSAGE | No. OF POST AND SIZES | No. OF SIGNS |
|---|---|---|---|---|---|
| A | W20-1 | 48" x 48" | ROAD WORK AHEAD | (2)-4"x 4" | 7 |
| B | G20-2 | 36" x 18" | END ROAD WORK | (1)-4"x 6" | 7 |

**NOTE:**
SIGN LOCATION SHOWN ARE APPROXIMATE.
EXACT LOCATIONS TO BE DETERMINED BY THE ENGINEER

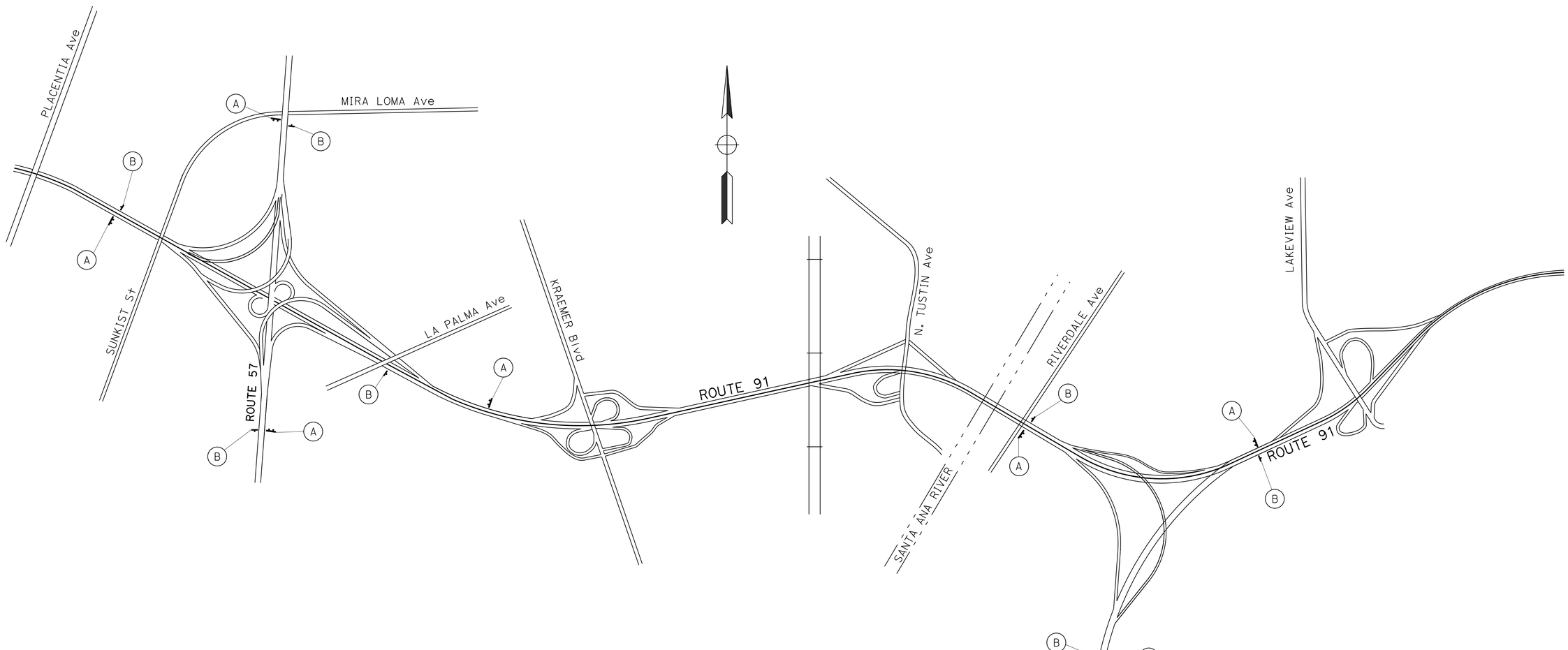


# CONSTRUCTION AREA SIGNS
NO SCALE

*APPROVED FOR CONSTRUCTION AREA SIGN WORK ONLY*

**CS-1**

STATE OF CALIFORNIA - DEPARTMENT OF TRANSPORTATION
Caltrans® **DESIGN DIVISION**

FUNCTIONAL SUPERVISOR: MILI LIM STAMATION
CALCULATED-DESIGNED BY: KIMBERLY NGUYEN
CHECKED BY: RICK NGO
REVISED BY
DATE REVISED

LAST REVISION 07-28-16
DATE PLOTTED => 30-AUG-2016
TIME PLOTTED => 14:22

| Dist | COUNTY | ROUTE | POST MILES TOTAL PROJECT | SHEET No. | TOTAL SHEETS |
|---|---|---|---|---|---|
| 12 | Ora | 55, 57, 91 | 17.5/17.9; 15.2/16.0 5.8/6.8; 8.7/R9.5 | 44 | 95 |

REGISTERED CIVIL ENGINEER 07-26-16 DATE

07-25-16
PLANS APPROVAL DATE

REGISTERED PROFESSIONAL ENGINEER KIMBERLY NGUYEN No. C 64577 Exp. 06/30/17 CIVIL STATE OF CALIFORNIA

*THE STATE OF CALIFORNIA OR ITS OFFICERS OR AGENTS SHALL NOT BE RESPONSIBLE FOR THE ACCURACY OR COMPLETENESS OF SCANNED COPIES OF THIS PLAN SHEET.*

## NOTES:

1. FOR ACCURATE RIGHT OF WAY AND ACCESS DATA, CONTACT RIGHT OF WAY ENGINEERING AT THE DISTRICT OFFICE.
2. TEMPORARY CRASH CUSHION SHALL BE MAXIMUM 2' WIDE FROM THE CALTRANS PRE APPROVED TRAFFIC SAFETY DEVICE AND SHALL BE INSTALLED AND REMOVED PER MANUFACTURE PRODUCT MANUAL/PLANS.
3. CALTRANS PREAPPROVED TRAFFIC SAFETY DEVICES LINK: http://www.dot.ca.gov/hq/esc/approved_products_list/pdf/highway_safety_features.pdf
4. LOCATION OF SIGNS AND PCMS SHOWN ARE APPROXIMATE, EXACT SIGN LOCATIONS AND MESSAGE ON PCMS TO BE DETERMINED BY THE ENGINNER.

## ABBREVIATIONS:

| | |
|---|---|
| ATCC | ALTERNATIVE TEMPORARY CRASH CUSHION |
| TR(K) | TEMPORARY RAILING (TYPE K) |
| TCCM 'TU21' | TEMPORARY CRASH CUSHION, SAND FILLED ARRAY 'TU21' |

## LEGEND:

- MGS LOCATION
- ALTERNATIVE Temp CRASH CUSHION
- TEMPORARY RAILING (TYPE K)
- DIRECTION OF TRAVEL
- TRAFFIC PLASTIC DRUM
- SIGN 1-POST

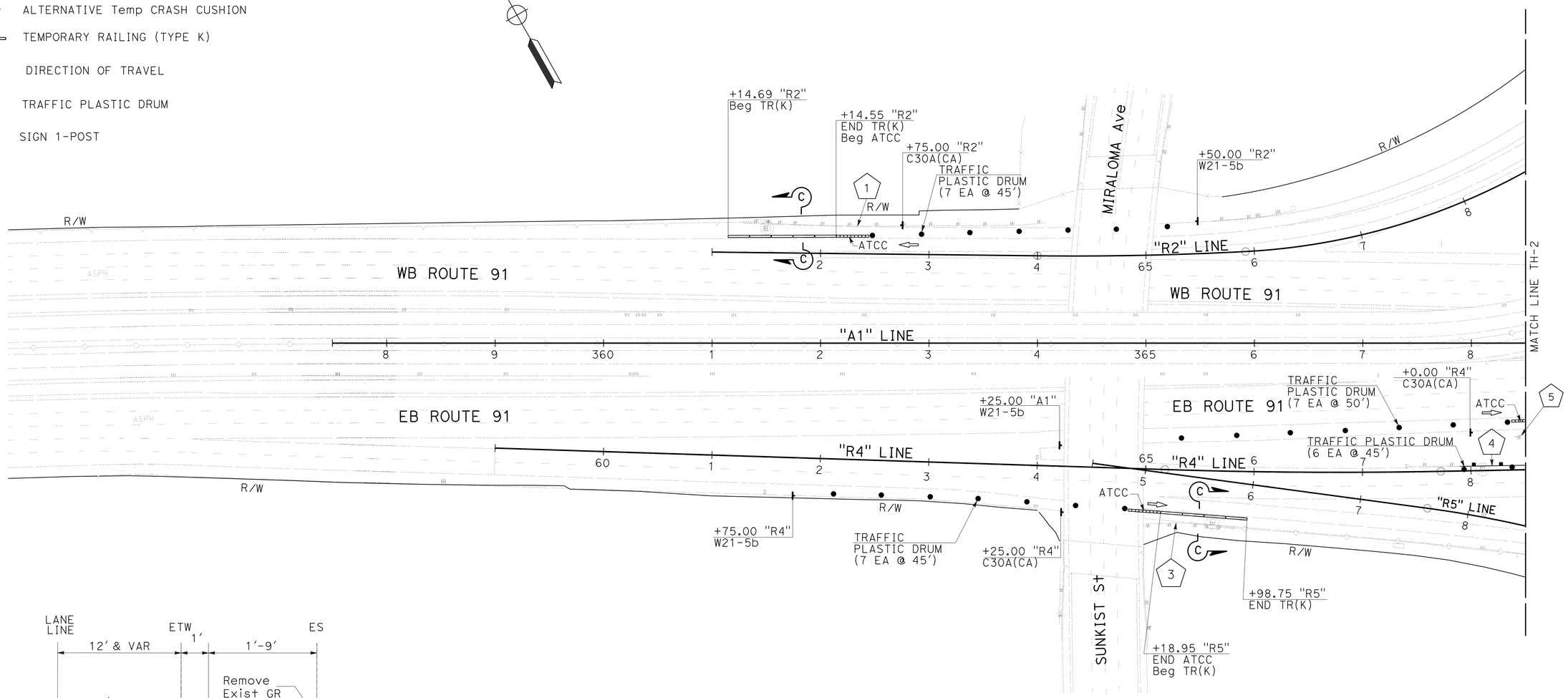


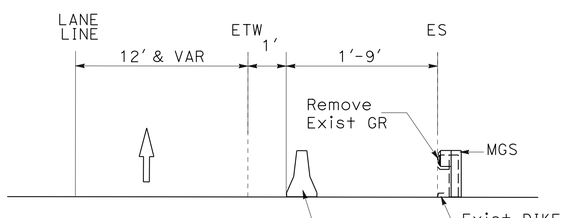


**TYPICAL SECTION C-C**
NO SCALE

# TRAFFIC HANDLING PLAN
SCALE 1" = 50'

**TH-1**

*APPROVED FOR TRAFFIC HANDLING WORK ONLY*

STATE OF CALIFORNIA - DEPARTMENT OF TRANSPORTATION
Caltrans® DESIGN DIVISION

FUNCTIONAL SUPERVISOR: MILI LIM STAMATION
CALCULATED-DESIGNED BY: KIMBERLY NGUYEN
CHECKED BY: RICK NGO
REVISED BY
DATE REVISED

LAST REVISION 07-28-16
DATE PLOTTED => 30-AUG-2016
TIME PLOTTED => 14:22

| Dist | COUNTY | ROUTE | POST MILES TOTAL PROJECT | SHEET No. | TOTAL SHEETS |
|---|---|---|---|---|---|
| 12 | Ora | 55, 57, 91 | 17.5/17.9; 15.2/16.0 5.8/6.8; 8.7/R9.5 | 45 | 95 |

REGISTERED CIVIL ENGINEER 07-26-16 DATE

07-25-16
PLANS APPROVAL DATE

REGISTERED PROFESSIONAL ENGINEER KIMBERLY NGUYEN No. C 64577 Exp 06/30/17 CIVIL STATE OF CALIFORNIA

*THE STATE OF CALIFORNIA OR ITS OFFICERS OR AGENTS SHALL NOT BE RESPONSIBLE FOR THE ACCURACY OR COMPLETENESS OF SCANNED COPIES OF THIS PLAN SHEET.*

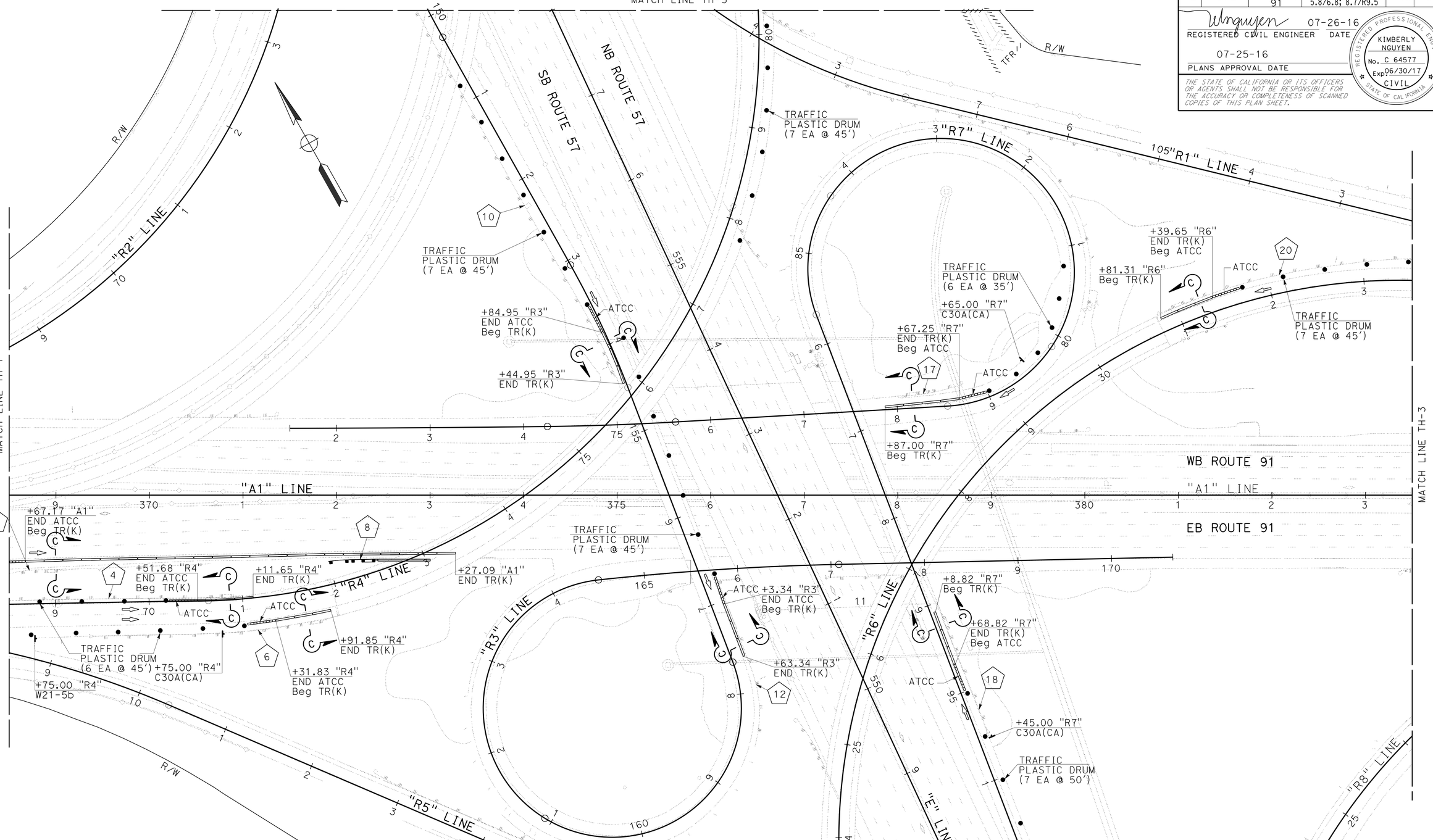


NOTE:

FOR ACCURATE RIGHT OF WAY DATA, CONTACT RIGHT OF WAY ENGINEERING AT THE DISTRICT OFFICE.

# TRAFFIC HANDLING PLAN

SCALE 1" = 50'

*APPROVED FOR TRAFFIC HANDLING WORK ONLY*

**TH-2**

STATE OF CALIFORNIA - DEPARTMENT OF TRANSPORTATION
Caltrans® **DESIGN DIVISION**

FUNCTIONAL SUPERVISOR: MILI LIM STAMATION
CALCULATED-DESIGNED BY: KIMBERLY NGUYEN
CHECKED BY: RICK NGO
REVISED BY
DATE REVISED

LAST REVISION 07-28-16 | DATE PLOTTED => 30-AUG-2016 | TIME PLOTTED => 14:22

| Dist | COUNTY | ROUTE | POST MILES TOTAL PROJECT | SHEET No. | TOTAL SHEETS |
|---|---|---|---|---|---|
| 12 | Ora | 55, 57, 91 | 17.5/17.9; 15.2/16.0 5.8/6.8; 8.7/R9.5 | 46 | 95 |

REGISTERED CIVIL ENGINEER — DATE: 07-26-16

07-25-16
PLANS APPROVAL DATE

REGISTERED PROFESSIONAL ENGINEER — KIMBERLY NGUYEN — No. C 64577 — Exp. 06/30/17 — CIVIL — STATE OF CALIFORNIA

*THE STATE OF CALIFORNIA OR ITS OFFICERS OR AGENTS SHALL NOT BE RESPONSIBLE FOR THE ACCURACY OR COMPLETENESS OF SCANNED COPIES OF THIS PLAN SHEET.*

**NOTE:**

FOR ACCURATE RIGHT OF WAY DATA, CONTACT RIGHT OF WAY ENGINEERING AT THE DISTRICT OFFICE.

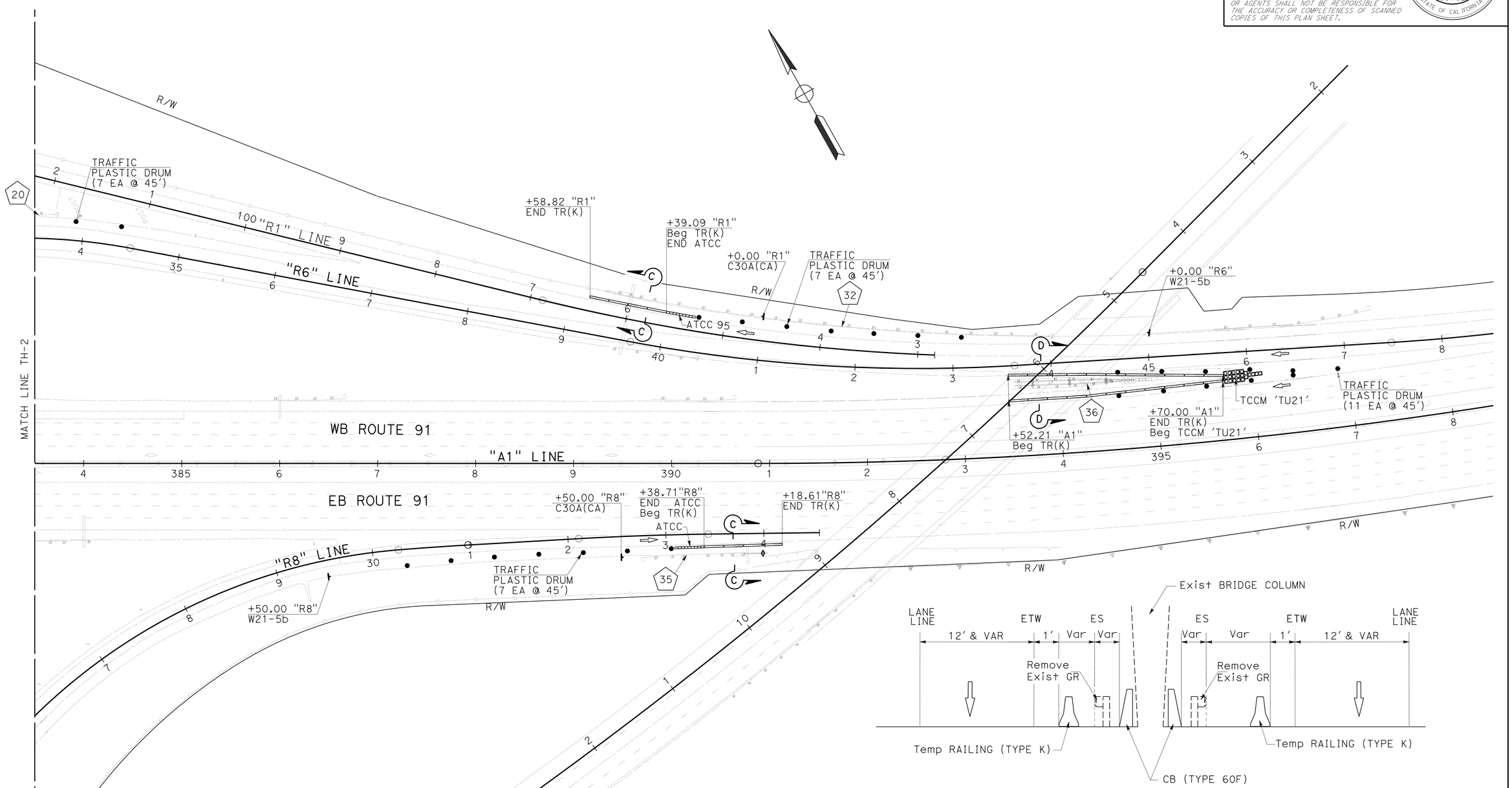


**TYPICAL SECTION D-D**

NO SCALE

# TRAFFIC HANDLING PLAN

SCALE 1" = 50'

*APPROVED FOR TRAFFIC HANDLING WORK ONLY*

**TH-3**

STATE OF CALIFORNIA - DEPARTMENT OF TRANSPORTATION
Caltrans® **DESIGN DIVISION**

FUNCTIONAL SUPERVISOR: MILI LIM STAMATION

CALCULATED-DESIGNED BY: KIMBERLY NGUYEN
CHECKED BY: RICK NGO

REVISED BY
DATE REVISED

LAST REVISION 07-28-16 | DATE PLOTTED => 30-AUG-2016 | TIME PLOTTED => 14:22

| Dist | COUNTY | ROUTE | POST MILES TOTAL PROJECT | SHEET No. | TOTAL SHEETS |
|---|---|---|---|---|---|
| 12 | Ora | 55, 57, 91 | 17.5/17.9; 15.2/16.0 5.8/6.8; 8.7/R9.5 | 47 | 95 |

Wnguyen 07-26-16
REGISTERED CIVIL ENGINEER DATE

07-25-16
PLANS APPROVAL DATE

REGISTERED PROFESSIONAL ENGINEER
KIMBERLY NGUYEN
No. C 64577
Exp. 06/30/17
CIVIL
STATE OF CALIFORNIA

*THE STATE OF CALIFORNIA OR ITS OFFICERS OR AGENTS SHALL NOT BE RESPONSIBLE FOR THE ACCURACY OR COMPLETENESS OF SCANNED COPIES OF THIS PLAN SHEET.*

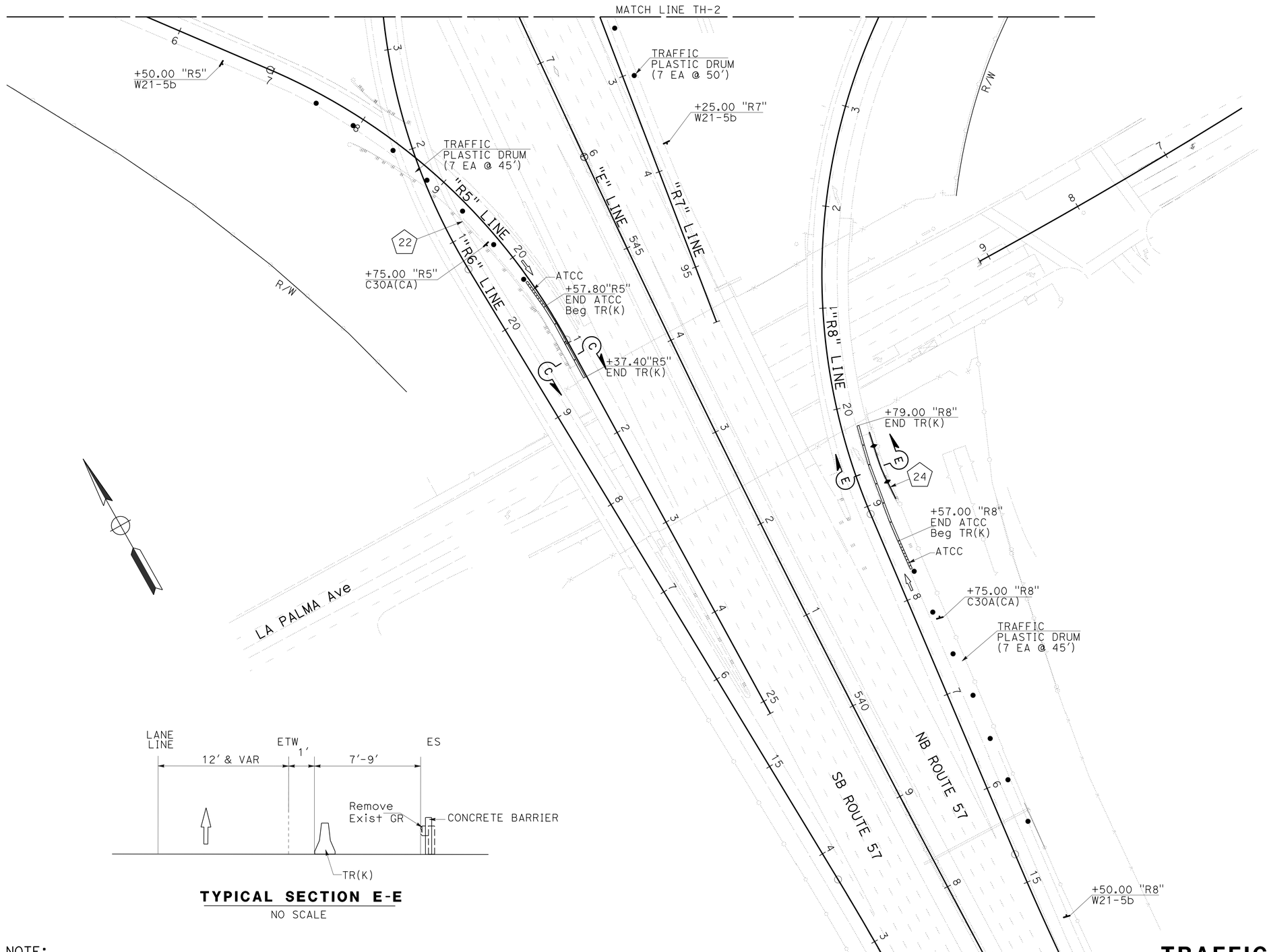





**TYPICAL SECTION E-E**
NO SCALE

NOTE:
FOR ACCURATE RIGHT OF WAY DATA, CONTACT RIGHT OF WAY ENGINEERING AT THE DISTRICT OFFICE.

# TRAFFIC HANDLING PLAN
SCALE 1" = 50'

*APPROVED FOR TRAFFIC HANDLING WORK ONLY*

**TH-4**

| REVISED BY | DATE REVISED |
|---|---|
| KIMBERLY NGUYEN | |
| RICK NGO | |
| CALCULATED-DESIGNED BY | CHECKED BY |
| FUNCTIONAL SUPERVISOR | |
| MILI LIM STAMATION | |

STATE OF CALIFORNIA - DEPARTMENT OF TRANSPORTATION
Caltrans® DESIGN DIVISION

LAST REVISION 07-28-16 | DATE PLOTTED => 30-AUG-2016 | TIME PLOTTED => 14:22

| Dist | COUNTY | ROUTE | POST MILES TOTAL PROJECT | SHEET No. | TOTAL SHEETS |
|---|---|---|---|---|---|
| 12 | Ora | 55, 57, 91 | 17.5/17.9; 15.2/16.0 5.8/6.8; 8.7/R9.5 | 48 | 95 |

kNguyen 07-26-16
REGISTERED CIVIL ENGINEER DATE

07-25-16
PLANS APPROVAL DATE

REGISTERED PROFESSIONAL ENGINEER
KIMBERLY NGUYEN
No. C 64577
Exp. 06/30/17
CIVIL
STATE OF CALIFORNIA

*THE STATE OF CALIFORNIA OR ITS OFFICERS OR AGENTS SHALL NOT BE RESPONSIBLE FOR THE ACCURACY OR COMPLETENESS OF SCANNED COPIES OF THIS PLAN SHEET.*

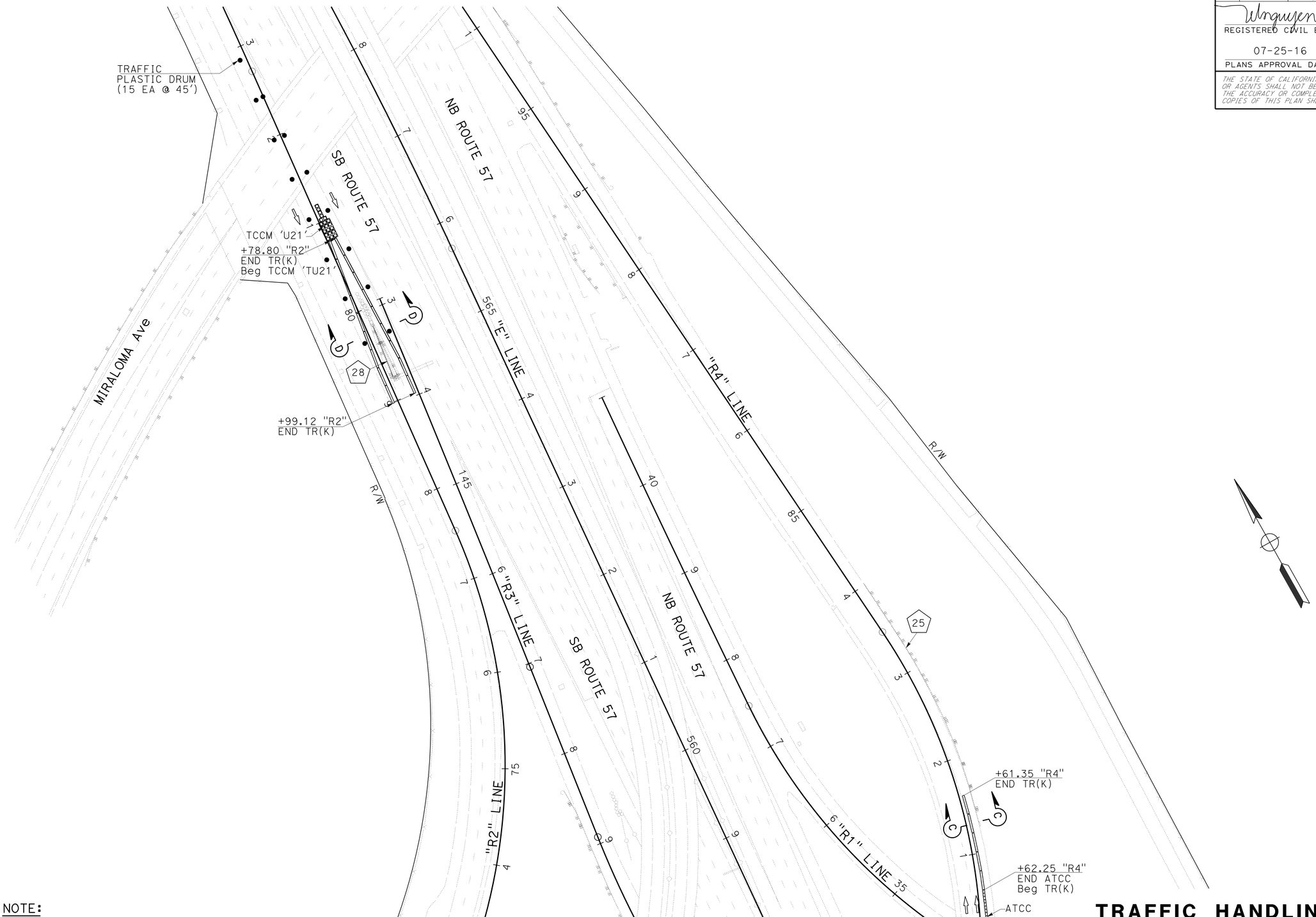


NOTE:

FOR ACCURATE RIGHT OF WAY DATA, CONTACT RIGHT OF WAY ENGINEERING AT THE DISTRICT OFFICE.

*APPROVED FOR TRAFFIC HANDLING WORK ONLY*

# TRAFFIC HANDLING PLAN

SCALE 1" = 50'

**TH-5**

STATE OF CALIFORNIA - DEPARTMENT OF TRANSPORTATION
Caltrans® DESIGN DIVISION

FUNCTIONAL SUPERVISOR: MILI LIM STAMATION
CALCULATED-DESIGNED BY: KIMBERLY NGUYEN
CHECKED BY: RICK NGO
REVISED BY
DATE REVISED

LAST REVISION DATE PLOTTED => 30-AUG-2016
07-15-16 TIME PLOTTED => 14:22

| Dist | COUNTY | ROUTE | POST MILES TOTAL PROJECT | SHEET No. | TOTAL SHEETS |
|---|---|---|---|---|---|
| 12 | Ora | 55, 57, 91 | 17.5/17.9; 15.2/16.0 5.8/6.8; 8.7/R9.5 | 49 | 95 |

REGISTERED CIVIL ENGINEER 07-26-16 DATE

07-25-16
PLANS APPROVAL DATE

REGISTERED PROFESSIONAL ENGINEER KIMBERLY NGUYEN No. C 64577 Exp 06/30/17 CIVIL STATE OF CALIFORNIA

*THE STATE OF CALIFORNIA OR ITS OFFICERS OR AGENTS SHALL NOT BE RESPONSIBLE FOR THE ACCURACY OR COMPLETENESS OF SCANNED COPIES OF THIS PLAN SHEET.*

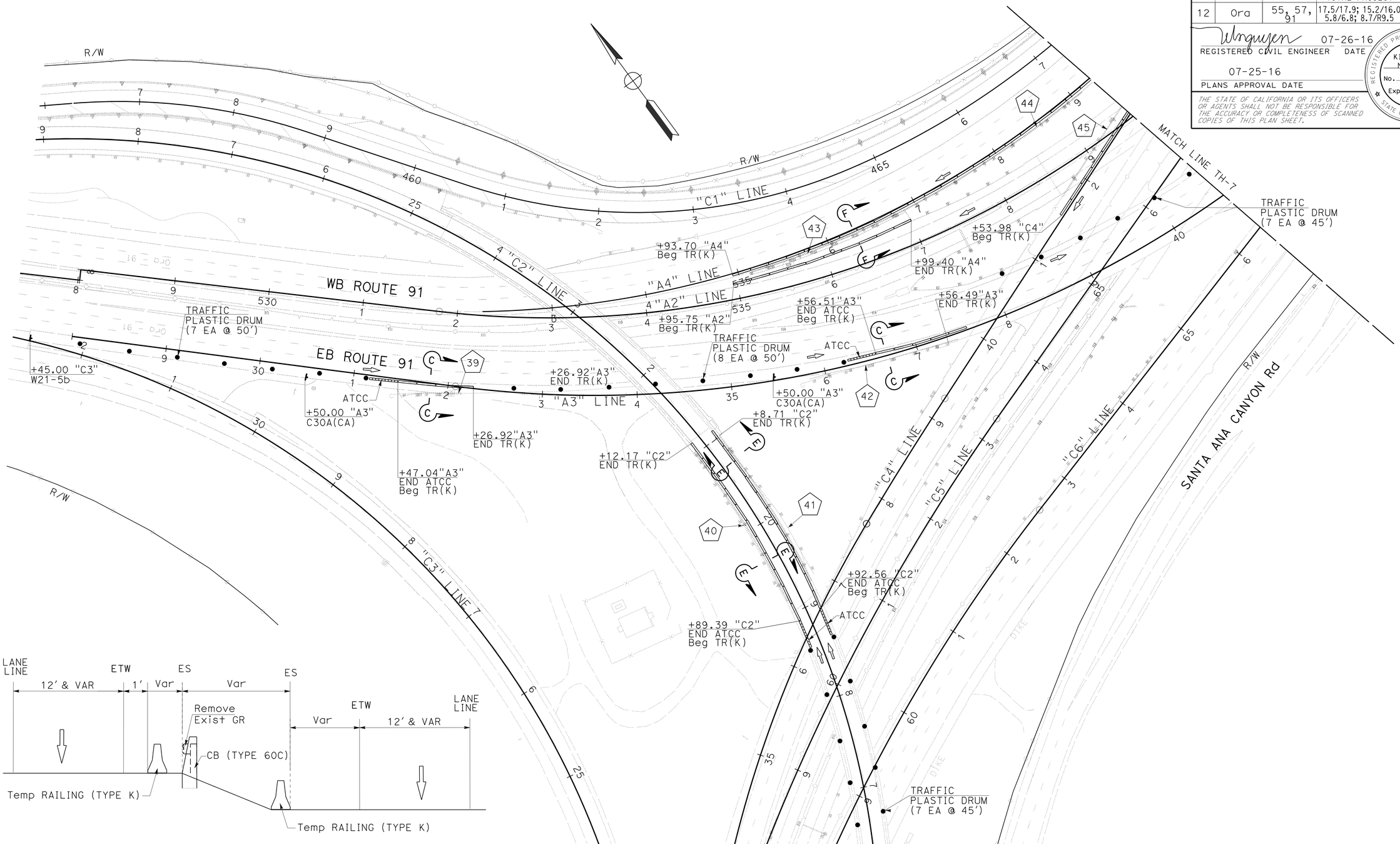





**TYPICAL SECTION F-F**
NO SCALE

NOTE:
FOR ACCURATE RIGHT OF WAY DATA, CONTACT RIGHT OF WAY ENGINEERING AT THE DISTRICT OFFICE.

# TRAFFIC HANDLING PLAN
SCALE 1" = 50'

*APPROVED FOR TRAFFIC HANDLING WORK ONLY*

**TH-6**

REVISED BY | DATE REVISED
KIMBERLY NGUYEN | RICK NGO
CALCULATED-DESIGNED BY | CHECKED BY
FUNCTIONAL SUPERVISOR | MILI LIM STAMATION

STATE OF CALIFORNIA - DEPARTMENT OF TRANSPORTATION
Caltrans DESIGN DIVISION

LAST REVISION 07-15-16 | DATE PLOTTED => 30-AUG-2016 | TIME PLOTTED => 14:22

| Dist | COUNTY | ROUTE | POST MILES TOTAL PROJECT | SHEET No. | TOTAL SHEETS |
|---|---|---|---|---|---|
| 12 | Ora | 55, 57, 91 | 17.5/17.9; 15.2/16.0 5.8/6.8; 8.7/R9.5 | 50 | 95 |

REGISTERED CIVIL ENGINEER 07-26-16 DATE

07-25-16
PLANS APPROVAL DATE

REGISTERED PROFESSIONAL ENGINEER
KIMBERLY NGUYEN
No. C 64577
Exp. 06/30/17
CIVIL
STATE OF CALIFORNIA

*THE STATE OF CALIFORNIA OR ITS OFFICERS OR AGENTS SHALL NOT BE RESPONSIBLE FOR THE ACCURACY OR COMPLETENESS OF SCANNED COPIES OF THIS PLAN SHEET.*

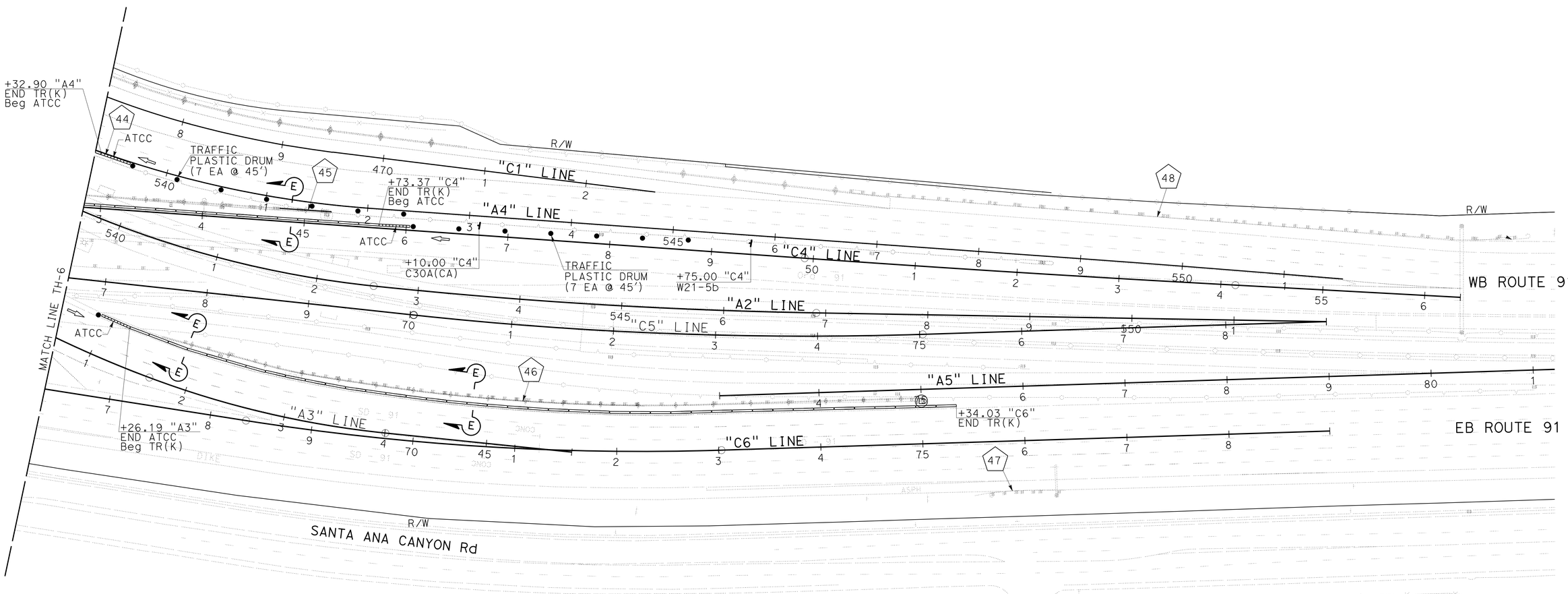


NOTE:

FOR ACCURATE RIGHT OF WAY DATA, CONTACT
RIGHT OF WAY ENGINEERING AT THE DISTRICT OFFICE.

# TRAFFIC HANDLING PLAN

SCALE 1" = 50'

**TH-7**

*APPROVED FOR TRAFFIC HANDLING WORK ONLY*

STATE OF CALIFORNIA - DEPARTMENT OF TRANSPORTATION
Caltrans DESIGN DIVISION

FUNCTIONAL SUPERVISOR: MILI LIM STAMATION
CALCULATED-DESIGNED BY: KIMBERLY NGUYEN
CHECKED BY: RICK NGO
REVISED BY / DATE REVISED

LAST REVISION 07-28-16
DATE PLOTTED => 30-AUG-2016
TIME PLOTTED => 14:22

| Dist | COUNTY | ROUTE | POST MILES TOTAL PROJECT | SHEET No. | TOTAL SHEETS |
|---|---|---|---|---|---|
| 12 | Ora | 55, 57, 91 | 17.5/17.9; 15.2/16.0 5.8/6.8; 8.7/R9.5 | 51 | 95 |

REGISTERED CIVIL ENGINEER 07-26-16 DATE

07-25-16
PLANS APPROVAL DATE

REGISTERED PROFESSIONAL ENGINEER KIMBERLY NGUYEN No. C 64577 Exp. 06/30/17 CIVIL STATE OF CALIFORNIA

*THE STATE OF CALIFORNIA OR ITS OFFICERS OR AGENTS SHALL NOT BE RESPONSIBLE FOR THE ACCURACY OR COMPLETENESS OF SCANNED COPIES OF THIS PLAN SHEET.*

## PORTABLE CHANGEABLE MESSAGE SIGN

| PCMS No. | MESSAGE | |
|---|---|---|
| | 1ST FRAME | 2ND FRAME |
| PCMS-1 | WB ROUTE 91 CONNECTOR CLOSED | DETOUR AHEAD |
| PCMS-2 | WB ROUTE 91 DETOUR | USE LINCOLN Ave EXIT |

**CLOSURE:**

SB ROUTE 57 TO WB ROUTE 91 CONNECTOR

**DETOUR:**

SB ROUTE 57 TO LINCOLN Ave OFF-RAMP
TO NB ROUTE 57 LINCOLN AvE ON-RAMP
TO WB ROUTE 91

# TRAFFIC HANDLING PLAN
## (DETOUR)
NO SCALE

**TH-8**

*APPROVED FOR TRAFFIC HANDLING WORK ONLY*

STATE OF CALIFORNIA - DEPARTMENT OF TRANSPORTATION
Caltrans® DESIGN DIVISION

FUNCTIONAL SUPERVISOR: MILI LIM STAMATION
CALCULATED-DESIGNED BY: NYCHOLE KHONG
CHECKED BY: KIMBERLY NGUYEN
REVISED BY
DATE REVISED

LAST REVISION 07-28-16 | DATE PLOTTED => 30-AUG-2016 | TIME PLOTTED => 14:22

| Dist | COUNTY | ROUTE | POST MILES TOTAL PROJECT | SHEET No. | TOTAL SHEETS |
|---|---|---|---|---|---|
| 12 | Ora | 55, 57, 91 | 17.5/17.9; 15.2/16.0 5.8/6.8; 8.7/R9.5 | 52 | 95 |

knguyen 07-26-16
REGISTERED CIVIL ENGINEER DATE

07-25-16
PLANS APPROVAL DATE

REGISTERED PROFESSIONAL ENGINEER
KIMBERLY NGUYEN
No. C 64577
Exp. 06/30/17
CIVIL
STATE OF CALIFORNIA

*THE STATE OF CALIFORNIA OR ITS OFFICERS OR AGENTS SHALL NOT BE RESPONSIBLE FOR THE ACCURACY OR COMPLETENESS OF SCANNED COPIES OF THIS PLAN SHEET.*

## PORTABLE CHANGEABLE MESSAGE SIGN

| PCMS No. | MESSAGE | |
|---|---|---|
| | 1ST FRAME | 2ND FRAME |
| PCMS-3 | EB ROUTE 91 CONNECTOR CLOSED | DETOUR AHEAD |
| PCMS-4 | EB ROUTE 91 DETOUR | USE LINCOLN Ave EXIT |

**CLOSURE:**

SB ROUTE 57 TO EB ROUTE 91 CONNECTOR

**DETOUR:**

SB ROUTE 57 TO LINCOLN Ave OFF-RAMP
TO NB ROUTE 57 LINCOLN Ave ON-RAMP
TO EB ROUTE 91

# TRAFFIC HANDLING PLAN

**(DETOUR)**

NO SCALE

**TH-9**

*APPROVED FOR TRAFFIC HANDLING WORK ONLY*

STATE OF CALIFORNIA - DEPARTMENT OF TRANSPORTATION
Caltrans® **DESIGN DIVISION**

FUNCTIONAL SUPERVISOR: MILI LIM STAMATION
CALCULATED-DESIGNED BY: NYCHOLE KHONG
CHECKED BY: KIMBERLY NGUYEN
REVISED BY
DATE REVISED

LAST REVISION 07-28-16
DATE PLOTTED => 30-AUG-2016
TIME PLOTTED => 14:22

| Dist | COUNTY | ROUTE | POST MILES TOTAL PROJECT | SHEET No. | TOTAL SHEETS |
|---|---|---|---|---|---|
| 12 | Ora | 55, 57, 91 | 17.5/17.9; 15.2/16.0 5.8/6.8; 8.7/R9.5 | 53 | 95 |

REGISTERED CIVIL ENGINEER 07-26-16 DATE

07-25-16
PLANS APPROVAL DATE

REGISTERED PROFESSIONAL ENGINEER KIMBERLY NGUYEN No. C 64577 Exp. 06/30/17 CIVIL STATE OF CALIFORNIA

*THE STATE OF CALIFORNIA OR ITS OFFICERS OR AGENTS SHALL NOT BE RESPONSIBLE FOR THE ACCURACY OR COMPLETENESS OF SCANNED COPIES OF THIS PLAN SHEET.*

## PORTABLE CHANGEABLE MESSAGE SIGN

| PCMS No. | MESSAGE | |
|---|---|---|
| | 1St FRAME | 2ND FRAME |
| PCMS-5 | SB ROUTE 57 CONNECTOR CLOSED | DETOUR AHEAD |
| PCMS-6 | SB ROUTE 57 DETOUR | USE KRAEMER Blvd EXIT |

**CLOSURE:**

EB ROUTE 91 TO SB ROUTE 57 CONNECTOR

**DETOUR:**

EB ROUTE 91 KRAEMER Blvd/GLASSELL St OFF-RAMP TO SB GLASSELL St TO WB LINCOLN Ave

# TRAFFIC HANDLING PLAN

**(DETOUR)**

NO SCALE

**TH-10**

*APPROVED FOR TRAFFIC HANDLING WORK ONLY*

STATE OF CALIFORNIA - DEPARTMENT OF TRANSPORTATION
Caltrans® **DESIGN DIVISION**

FUNCTIONAL SUPERVISOR: MILI LIM STAMATION
CALCULATED-DESIGNED BY: NYCHOLE KHONG
CHECKED BY: KIMBERLY NGUYEN
REVISED BY
DATE REVISED

LAST REVISION 07-28-16 | DATE PLOTTED => 30-AUG-2016 | TIME PLOTTED => 14:22

| Dist | COUNTY | ROUTE | POST MILES TOTAL PROJECT | SHEET No. | TOTAL SHEETS |
|---|---|---|---|---|---|
| 12 | Ora | 55, 57, 91 | 17.5/17.9; 15.2/16.0 5.8/6.8; 8.7/R9.5 | 54 | 95 |

REGISTERED CIVIL ENGINEER 07-26-16 DATE

07-25-16
PLANS APPROVAL DATE

REGISTERED PROFESSIONAL ENGINEER KIMBERLY NGUYEN No. C 64577 Exp. 06/30/17 CIVIL STATE OF CALIFORNIA

*THE STATE OF CALIFORNIA OR ITS OFFICERS OR AGENTS SHALL NOT BE RESPONSIBLE FOR THE ACCURACY OR COMPLETENESS OF SCANNED COPIES OF THIS PLAN SHEET.*

## PORTABLE CHANGEABLE MESSAGE SIGN

| PCMS No. | MESSAGE | |
|---|---|---|
| | 1ST FRAME | 2ND FRAME |
| PCMS-7 | EB ROUTE 91 CONNECTOR CLOSED | DETOUR AHEAD |
| PCMS-8 | EB ROUTE 91 DETOUR | USE ORANGETHORPE Ave EXIT |

# TRAFFIC HANDLING PLAN
**(DETOUR)**
NO SCALE

**TH-11**

*APPROVED FOR TRAFFIC HANDLING WORK ONLY*

STATE OF CALIFORNIA - DEPARTMENT OF TRANSPORTATION
Caltrans® **DESIGN DIVISION**

FUNCTIONAL SUPERVISOR: MILI LIM STAMATION
CALCULATED-DESIGNED BY: NYCHOLE KHONG
CHECKED BY: KIMBERLY NGUYEN
REVISED BY
DATE REVISED

LAST REVISION 07-28-16
DATE PLOTTED => 30-AUG-2016
TIME PLOTTED => 14:22

| Dist | COUNTY | ROUTE | POST MILES TOTAL PROJECT | SHEET No. | TOTAL SHEETS |
|---|---|---|---|---|---|
| 12 | Ora | 55, 57, 91 | 17.5/17.9; 15.2/16.0 5.8/6.8; 8.7/R9.5 | 55 | 95 |

REGISTERED CIVIL ENGINEER 07-26-16 DATE

07-25-16
PLANS APPROVAL DATE

REGISTERED PROFESSIONAL ENGINEER KIMBERLY NGUYEN No. C 64577 Exp. 06/30/17 CIVIL STATE OF CALIFORNIA

*THE STATE OF CALIFORNIA OR ITS OFFICERS OR AGENTS SHALL NOT BE RESPONSIBLE FOR THE ACCURACY OR COMPLETENESS OF SCANNED COPIES OF THIS PLAN SHEET.*

## PORTABLE CHANGEABLE MESSAGE SIGN

| PCMS No. | MESSAGE | |
|---|---|---|
| | 1ST FRAME | 2ND FRAME |
| PCMS-9 | WB ROUTE 91 CONNECTOR CLOSED | DETOUR AHEAD |
| PCMS-10 | WB ROUTE 91 DETOUR | USE ORANGETHORPE Ave EXIT |

**CLOSURE:**

NB ROUTE 57 TO WB ROUTE 91 CONNECTOR

**DETOUR:**

NB ROUTE 57 TO ORANGETHORPE Ave OFF-RAMP
TO SB ROUTE 57 ORANGETHORPE Ave ON-RAMP
TO WB ROUTE 91

# TRAFFIC HANDLING PLAN
## (DETOUR)
NO SCALE

*APPROVED FOR TRAFFIC HANDLING WORK ONLY*

**TH-12**

STATE OF CALIFORNIA - DEPARTMENT OF TRANSPORTATION
Caltrans® DESIGN DIVISION

FUNCTIONAL SUPERVISOR: MILI LIM STAMATION
CALCULATED-DESIGNED BY: NYCHOLE KHONG
CHECKED BY: KIMBERLY NGUYEN
REVISED BY / DATE REVISED

LAST REVISION 07-28-16 | DATE PLOTTED => 30-AUG-2016 | TIME PLOTTED => 14:22

| Dist | COUNTY | ROUTE | POST MILES TOTAL PROJECT | SHEET No. | TOTAL SHEETS |
|---|---|---|---|---|---|
| 12 | Ora | 55, 57, 91 | 17.5/17.9; 15.2/16.0 5.8/6.8; 8.7/R9.5 | 56 | 95 |

REGISTERED CIVIL ENGINEER 07-26-16 DATE

07-25-16
PLANS APPROVAL DATE

REGISTERED PROFESSIONAL ENGINEER
KIMBERLY NGUYEN
No. C 64577
Exp.06/30/17
CIVIL
STATE OF CALIFORNIA

*THE STATE OF CALIFORNIA OR ITS OFFICERS OR AGENTS SHALL NOT BE RESPONSIBLE FOR THE ACCURACY OR COMPLETENESS OF SCANNED COPIES OF THIS PLAN SHEET.*

## PORTABLE CHANGEABLE MESSAGE SIGN

| PCMS No. | MESSAGE | |
|---|---|---|
| | 1ST FRAME | 2ND FRAME |
| PCMS-11 | NB ROUTE 57 CONNECTOR CLOSED | DETOUR AHEAD |
| PCMS-12 | NB ROUTE 57 DETOUR | USE STATE COLLEGE Blvd EXIT |

**CLOSURE:**

WB ROUTE 91 TO NB ROUTE 57 CONNECTOR

**DETOUR:**

WB ROUTE 91 TO STATE COLLEGE Blvd OFF-RAMP
TO NB STATE COLLEGE Blvd
TO EB ORANGETHORPE Ave

# TRAFFIC HANDLING PLAN

**(DETOUR)**

NO SCALE

*APPROVED FOR TRAFFIC HANDLING WORK ONLY*

**TH-13**

STATE OF CALIFORNIA - DEPARTMENT OF TRANSPORTATION
Caltrans
DESIGN DIVISION

FUNCTIONAL SUPERVISOR: MILI LIM STAMATION
CALCULATED-DESIGNED BY: NYCHOLE KHONG
CHECKED BY: KIMBERLY NGUYEN
REVISED BY
DATE REVISED

LAST REVISION 07-28-16
DATE PLOTTED => 30-AUG-2016
TIME PLOTTED => 14:22

| Dist | COUNTY | ROUTE | POST MILES TOTAL PROJECT | SHEET No. | TOTAL SHEETS |
|---|---|---|---|---|---|
| 12 | Ora | 55, 57, 91 | 17.5/17.9; 15.2/16.0 5.8/6.8; 8.7/R9.5 | 57 | 95 |

REGISTERED CIVIL ENGINEER 07-26-16 DATE

07-25-16
PLANS APPROVAL DATE

REGISTERED PROFESSIONAL ENGINEER
KIMBERLY NGUYEN
No. C 64577
Exp. 06/30/17
CIVIL
STATE OF CALIFORNIA

*THE STATE OF CALIFORNIA OR ITS OFFICERS OR AGENTS SHALL NOT BE RESPONSIBLE FOR THE ACCURACY OR COMPLETENESS OF SCANNED COPIES OF THIS PLAN SHEET.*

## PORTABLE CHANGEABLE MESSAGE SIGN

| PCMS No. | MESSAGE | |
|---|---|---|
| | 1ST FRAME | 2ND FRAME |
| PCMS-13 | SB ROUTE 57 CONNECTOR CLOSED | DETOUR AHEAD |
| PCMS-14 | SB ROUTE 57 DETOUR | USE STATE COLLEGE Blvd EXIT |

**CLOSURE:**

WB ROUTE 91 TO SB ROUTE 57 CONNECTOR

**DETOUR:**

WB ROUTE 91 TO STATE COLLEGE Blvd OFF-RAMP
TO SB STATE COLLEGE Blvd
TO EB LINCOLN Ave

# TRAFFIC HANDLING PLAN

**(DETOUR)**

NO SCALE

*APPROVED FOR TRAFFIC HANDLING WORK ONLY*

**TH-14**

| REVISED BY | DATE REVISED |
|---|---|
| | |

| CALCULATED-DESIGNED BY | CHECKED BY |
|---|---|
| NYCHOLE KHONG | KIMBERLY NGUYEN |

FUNCTIONAL SUPERVISOR: MILI LIM STAMATION

STATE OF CALIFORNIA - DEPARTMENT OF TRANSPORTATION
Caltrans
DESIGN DIVISION

LAST REVISION 07-28-16 | DATE PLOTTED => 30-AUG-2016 | TIME PLOTTED => 14:22

| Dist | COUNTY | ROUTE | POST MILES TOTAL PROJECT | SHEET No. | TOTAL SHEETS |
|---|---|---|---|---|---|
| 12 | Ora | 55, 57, 91 | 17.5/17.9; 15.2/16.0 5.8/6.8; 8.7/R9.5 | 58 | 95 |

REGISTERED CIVIL ENGINEER 07-26-16 DATE

07-25-16
PLANS APPROVAL DATE

REGISTERED PROFESSIONAL ENGINEER KIMBERLY NGUYEN No. C 64577 Exp. 06/30/17 CIVIL STATE OF CALIFORNIA

*THE STATE OF CALIFORNIA OR ITS OFFICERS OR AGENTS SHALL NOT BE RESPONSIBLE FOR THE ACCURACY OR COMPLETENESS OF SCANNED COPIES OF THIS PLAN SHEET.*

NOTES:

1. USE 6" CAP LETTERS FOR ALL STREET NAMES.
2. USE 15'-7" LENGTH RAIL.

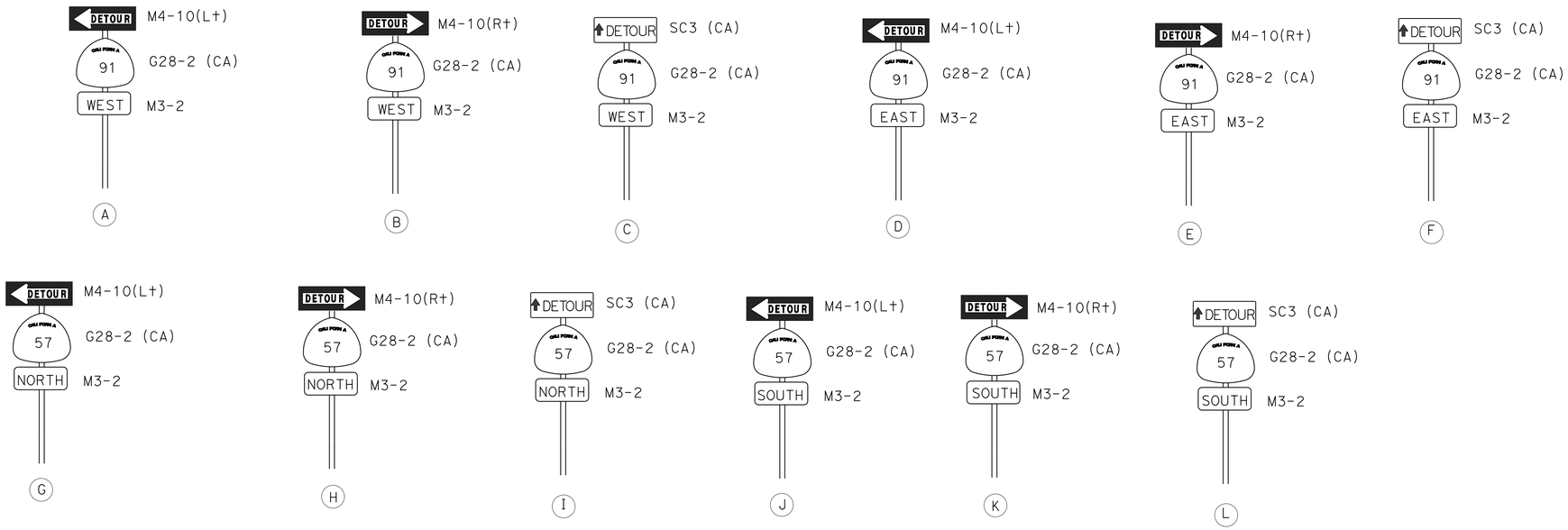


**DETOUR SIGNS**

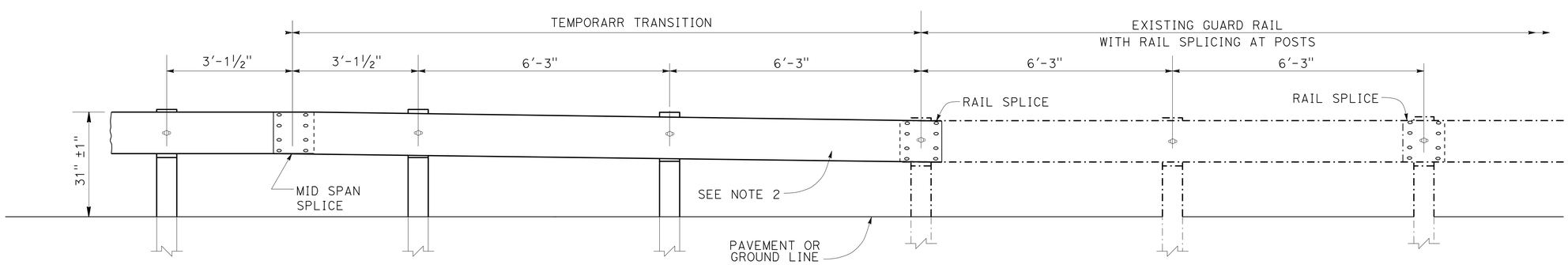


**TEMPORARY TRANSITION RAILING BETWEEN EXITING GUARD RAIL AND MIDWEST GUARDRAIL SYSTEM**

# TRAFFIC HANDLING DETAILS

NO SCALE

**THD-1**

STATE OF CALIFORNIA - DEPARTMENT OF TRANSPORTATION
Caltrans® DESIGN DIVISION

FUNCTIONAL SUPERVISOR: MILI LIM STAMATION
CALCULATED-DESIGNED BY: NYCHOLE KHONG
CHECKED BY: KIMBERLY NGUYEN
REVISED BY
DATE REVISED

LAST REVISION 07-28-16
DATE PLOTTED => 30-AUG-2016
TIME PLOTTED => 14:22

| Dist | COUNTY | ROUTE | POST MILES TOTAL PROJECT | SHEET No. | TOTAL SHEETS |
|---|---|---|---|---|---|
| 12 | Ora | 55, 57, 91 | 17.5/17.9; 15.2/16.0 5.8/6.8; 8.7/R9.5 | 59 | 95 |

kNguyen 07-26-16
REGISTERED CIVIL ENGINEER DATE

07-25-16
PLANS APPROVAL DATE

REGISTERED PROFESSIONAL ENGINEER KIMBERLY NGUYEN No. C 64577 Exp. 6/30/17 CIVIL STATE OF CALIFORNIA

*THE STATE OF CALIFORNIA OR ITS OFFICERS OR AGENTS SHALL NOT BE RESPONSIBLE FOR THE ACCURACY OR COMPLETENESS OF SCANNED COPIES OF THIS PLAN SHEET.*

## TEMPORARY ROADWAY QUANTITIES

| SHEET No. | LOCATION # | DIRECTION | TEMPORARY RAILING (TYPE K) | ALTERNATIVE TEMPORARY CRASH CUSHION | TEMPORARY CRASH CUSHION MODULE (ARRAY 'TU21') | TRAFFIC PLASTIC DRUM |
|---|---|---|---|---|---|---|
| | | | LF | EA | EA | EA |
| TH-1 | 1 | SB 57 to WB 91 | 100 | 1 | | 7 |
| | 3 | EB 91 to SB 57 | 80 | 1 | | 7 |
| TH-1, TH-2 | 5&8 | EB 91 | 460 | 1 | | 7 |
| TH-2 | 4 | EB 91 to NB 57 | 60 | 1 | | 6 |
| | 6 | EB 91 to NB 57 | 60 | 1 | | 6 |
| | 10 | SB 57 to EB 91 | 60 | 1 | | 7 |
| | 12 | SB 57 to EB 91 | 60 | 1 | | 7 |
| | 17 | NB 57 to EB 91 | 80 | 1 | | 6 |
| | 20 | WB 91 to SB 57 | 60 | 1 | | 7 |
| TH-2, TH-4 | 18 | NB 57 to EB 91 | 60 | 1 | | 7 |
| TH-4 | 22 | EB 91 to SB 57 | 80 | 1 | | 7 |
| | 24 | NB 57 to EB 91 | 120 | 1 | | 7 |
| TH-2, TH-5 | 25 | EB 91 to NB 57 | 100 | 1 | | 7 |
| TH-5 | 28 | SB 57 to EB 91 | 360 | | 21 | 11 |
| TH-3 | 32 | WB 91 to NB 57 | 80 | 1 | | 7 |
| | 35 | EB 91 | 80 | 1 | | 7 |
| | 36 | WB 91, WB 91 to SB 57 | 440 | | 21 | 15 |
| TH-6 | 39 | EB 91 | 80 | 1 | | 7 |
| | 40 | NB 55 to WB 91 | 220 | 1 | | 7 |
| | 41 | NB 55 to WB 91 | 220 | 1 | | 7 |
| | 42 | EB 91 | 100 | 1 | | 8 |
| | 43&44 | WB 91 | 640 | 1 | | 7 |
| TH-6, TH-7 | 45 | NB 55 TO WB 91 | 420 | 1 | | 7 |
| | 46 | EB 91 | 820 | 1 | | 7 |
| SHEET TOTAL | | | 4840 | 22 | 42 | 178 |

## CONSTRUCTION AREA SIGN (TRAFFIC HANDLING)

| SHEET No. | SIGN CODE | SIGN MESSAGE | PANEL SIZE | POST NUMBER AND SIZE | No. OF SIGNS |
|---|---|---|---|---|---|
| TH-1 | C30A (CA) | SHOULDER CLOSED | 30" x 30" | 2-4.0" x 4.0" | 3 |
| | W21-5b | SHOULDER CLOSED AHEAD | 36" x 36" | 2-4.0" x 4.0" | 3 |
| TH-2 | C30A (CA) | SHOULDER CLOSED | 30" x 30" | 2-4.0" x 4.0" | 3 |
| | W21-5b | SHOULDER CLOSED AHEAD | 36" x 36" | 2-4.0" x 4.0" | 1 |
| TH-3 | C30A (CA) | SHOULDER CLOSED | 30" x 30" | 2-4.0" x 4.0" | 2 |
| | W21-5b | SHOULDER CLOSED AHEAD | 36" x 36" | 2-4.0" x 4.0" | 2 |
| TH-4 | C30A (CA) | SHOULDER CLOSED | 30" x 30" | 2-4.0" x 4.0" | 2 |
| | W21-5b | SHOULDER CLOSED AHEAD | 36" x 36" | 2-4.0" x 4.0" | 3 |
| TH-6 | C30A (CA) | SHOULDER CLOSED | 30" x 30" | 2-4.0" x 4.0" | 2 |
| | W21-5b | SHOULDER CLOSED AHEAD | 36" x 36" | 2-4.0" x 4.0" | 1 |
| TH-7 | C30A (CA) | SHOULDER CLOSED | 30" x 30" | 2-4.0" x 4.0" | 1 |
| | W21-5b | SHOULDER CLOSED AHEAD | 36" x 36" | 2-4.0" x 4.0" | 1 |

FOR ADDITIONAL QUANTITES OF CONTRUCTION AREA SIGNS,
SEE SHEET CS-1 AND THQ-2.

# TRAFFIC HANDLING QUANTITIES

THQ-1

REVISED BY | DATE REVISED
KIMBERLY NGUYEN | RICK NGO
CALCULATED-DESIGNED BY | CHECKED BY
FUNCTIONAL SUPERVISOR | MILI LIM STAMATION

STATE OF CALIFORNIA - DEPARTMENT OF TRANSPORTATION
Caltrans DESIGN DIVISION

LAST REVISION 07-28-16 | DATE PLOTTED => 30-AUG-2016 TIME PLOTTED => 14:22

| Dist | COUNTY | ROUTE | POST MILES TOTAL PROJECT | SHEET No. | TOTAL SHEETS |
|---|---|---|---|---|---|
| 12 | Ora | 55, 57, 91 | 17.5/17.9; 15.2/16.0 5.8/6.8; 8.7/R9.5 | 60 | 95 |

REGISTERED CIVIL ENGINEER 07-26-16 DATE

07-25-16
PLANS APPROVAL DATE

REGISTERED PROFESSIONAL ENGINEER KIMBERLY NGUYEN No. C 64577 Exp. 6/30/17 CIVIL STATE OF CALIFORNIA

*THE STATE OF CALIFORNIA OR ITS OFFICERS OR AGENTS SHALL NOT BE RESPONSIBLE FOR THE ACCURACY OR COMPLETENESS OF SCANNED COPIES OF THIS PLAN SHEET.*

NOTE:

FOR ADDITIONAL QUANTITIES OF CONSTRUCTION AREA SIGNS, SEE SHEET CS-1.

## CONSTRUCTION AREA SIGN (DETOUR)

| SHEET No. | SIGN | CODE | PANEL SIZE | PANEL LABEL | No. OF POST AND SIZE | No. OF SIGNS |
|---|---|---|---|---|---|---|
| DE-1 | A | M4-10(L†) | 48" x 18" | DETOUR | 1 - 6" x 6" | 1 |
| | | G28-2 (CA) | 48" x 48" | 91 | | |
| | | M3-2 | 30" x 15" | WEST | | |
| | B | M4-10(R†) | 48" x 18" | DETOUR | 1 - 6" x 6" | 1 |
| | | G28-2 (CA) | 48" x 48" | 91 | | |
| | | M3-2 | 30" x 15" | WEST | | |
| | C | SC3 (CA) | 48" x 18" | DETOUR | 1 - 6" x 6" | 1 |
| | | G28-2 (CA) | 48" x 48" | 91 | | |
| | | M3-2 | 30" x 15" | WEST | | |
| DE-2 | D | M4-10(L†) | 48" x 18" | DETOUR | 1 - 6" x 6" | 1 |
| | | G28-2 (CA) | 48" x 48" | 91 | | |
| | | M3-2 | 30" x 15" | EAST | | |
| | E | M4-10(R†) | 48" x 18" | DETOUR | 1 - 6" x 6" | 1 |
| | | G28-2 (CA) | 48" x 48" | 91 | | |
| | | M3-2 | 30" x 15" | EAST | | |
| | F | SC3 (CA) | 48" x 18" | DETOUR | 1 - 6" x 6" | 1 |
| | | G28-2 (CA) | 48" x 48" | 91 | | |
| | | M3-2 | 30" x 15" | EAST | | |
| DE-3 | K | M4-10(R†) | 48" x 18" | DETOUR | 1 - 6" x 6" | 2 |
| | | G28-2 (CA) | 48" x 48" | 57 | | |
| | | M3-2 | 30" x 15" | SOUTH | | |
| | L | SC3 (CA) | 48" x 18" | DETOUR | 1 - 6" x 6" | 2 |
| | | G28-2 (CA) | 48" x 48" | 57 | | |
| | | M3-2 | 30" x 15" | SOUTH | | |

| SHEET No. | SIGN | CODE | PANEL SIZE | PANEL LABEL | No. OF POST AND SIZE | No. OF SIGNS |
|---|---|---|---|---|---|---|
| DE-4 | D | M4-10(L†) | 48" x 18" | DETOUR | 1 - 6" x 6" | 1 |
| | | G28-2 (CA) | 48" x 48" | 91 | | |
| | | M3-2 | 30" x 15" | EAST | | |
| | E | M4-10(R†) | 48" x 18" | DETOUR | 1 - 6" x 6" | 1 |
| | | G28-2 (CA) | 48" x 48" | 91 | | |
| | | M3-2 | 30" x 15" | EAST | | |
| | F | SC3 (CA) | 48" x 18" | DETOUR | 1 - 6" x 6" | 1 |
| | | G28-2 (CA) | 48" x 48" | 91 | | |
| | | M3-2 | 30" x 15" | EAST | | |
| DE-5 | A | M4-10(L†) | 48" x 18" | DETOUR | 1 - 6" x 6" | 1 |
| | | G28-2 (CA) | 48" x 48" | 91 | | |
| | | M3-2 | 30" x 15" | WEST | | |
| | B | M4-10(R†) | 48" x 18" | DETOUR | 1 - 6" x 6" | 1 |
| | | G28-2 (CA) | 48" x 48" | 91 | | |
| | | M3-2 | 30" x 15" | WEST | | |
| | C | SC3 (CA) | 48" x 18" | DETOUR | 1 - 6" x 6" | 1 |
| | | G28-2 (CA) | 48" x 48" | 91 | | |
| | | M3-2 | 30" x 15" | WEST | | |
| DE-6 | H | M4-10(R†) | 48" x 18" | DETOUR | 1 - 6" x 6" | 2 |
| | | G28-2 (CA) | 48" x 48" | 57 | | |
| | | M3-2 | 30" x 15" | NORTH | | |
| | I | SC3 (CA) | 48" x 18" | DETOUR | 1 - 6" x 6" | 1 |
| | | G28-2 (CA) | 48" x 48" | 57 | | |
| | | M3-2 | 30" x 15" | NORTH | | |
| DE-7 | J | M4-10(R†) | 48" x 18" | DETOUR | 1 - 6" x 6" | 1 |
| | | G28-2 (CA) | 48" x 48" | 57 | | |
| | | M3-2 | 30" x 15" | SOUTH | | |
| | K | M4-10(L†) | 48" x 18" | DETOUR | 1 - 6" x 6" | 1 |
| | | G28-2 (CA) | 48" x 48" | 57 | | |
| | | M3-2 | 30" x 15" | SOUTH | | |
| | L | SC3 (CA) | 48" x 18" | DETOUR | 1 - 6" x 6" | 2 |
| | | G28-2 (CA) | 48" x 48" | 57 | | |
| | | M3-2 | 30" x 15" | SOUTH | | |

## TRAFFIC HANDLING QUANTITIES

**THQ-2**

STATE OF CALIFORNIA - DEPARTMENT OF TRANSPORTATION
Caltrans® DESIGN DIVISION

FUNCTIONAL SUPERVISOR: MILI LIM STAMATION
CALCULATED-DESIGNED BY: NYCHOLE KHONG
CHECKED BY: KIMBERLY NGUYEN
REVISED BY
DATE REVISED

LAST REVISION 07-28-16 | DATE PLOTTED => 30-AUG-2016 TIME PLOTTED => 14:22

| Dist | COUNTY | ROUTE | POST MILES TOTAL PROJECT | SHEET No. | TOTAL SHEETS |
|---|---|---|---|---|---|
| 12 | Ora | 55, 57, 91 | 17.5/17.9; 15.2/16.0 5.8/6.8; 8.7/R9.5 | 61 | 95 |

REGISTERED CIVIL ENGINEER 07-26-16 DATE

07-25-16
PLANS APPROVAL DATE

REGISTERED PROFESSIONAL ENGINEER KIMBERLY NGUYEN No. C 64577 Exp. 6/30/17 CIVIL STATE OF CALIFORNIA

*THE STATE OF CALIFORNIA OR ITS OFFICERS OR AGENTS SHALL NOT BE RESPONSIBLE FOR THE ACCURACY OR COMPLETENESS OF SCANNED COPIES OF THIS PLAN SHEET.*

# MIDWEST GUARD RAIL SYSTEM QUANTITIES

| SHEET No. | LOCATION # | DIRECTION | REMOVE GUARDRAIL | TREATED WOOD WASTE | TRANSITION RAILING (TYPE WB-31) | END ANCHOR ASSEMBLY (TYPE SFT) | MGS (WOOD POST) | MGS (7' WOOD POST) | MGS LAYOUT TYPE (N) | ALTERNATIVE IN-LINE TERMINAL SYSTEM | ALTERNATIVE FLARED TERMINAL SYSTEM | BURIED POST END ANCHOR | END CAP (TYPE A) | END CAP (TYPE TC) (N) | IMPORTED BORROW | ROADWAY EXCAVATION (TYPE Y-1) (AERIALLY DEPOSITED LEAD) | GUARD RAILING DELINEATOR | REMOVE CRASH CUSHION, SAND FILLED | ALTERNATIVE CRASH CUSHION |
|---|---|---|---|---|---|---|---|---|---|---|---|---|---|---|---|---|---|---|---|
| | | | LF | LB | EA | EA | LF | LF | | EA | EA | EA | EA | EA | CY | CY | EA | EA | EA |
| L-1 | 1 | SB 57 to WB 91 | 282 | 3666 | 1 | | 237.50 | | 12C | | | 1 | | 1 | 10 | | 12 | | |
| | 2 | SB 57 to WB 91 | 400 | 5200 | | 1 | | 31.25 | 16B | | 1 | | | | | | 4 | | |
| | 3 | EB 91 to SB 57 | 75 | 975 | 1 | | 37.50 | | 12C | | | 1 | | 1 | 10 | | 4 | | |
| L-1, L-2 | 4 | EB 91 to NB 57 | 350 | 4550 | 1 | | 275.00 | | 12A | 1 | | | | 1 | | | 15 | | |
| | 5 | EB 91 | 75 | 975 | 1 | | 37.50 | | 12A | 1 | | | | 1 | | | 4 | | |
| L-2 | 6 | EB 91 to NB 57 | 250 | 3250 | 1 | | 175.00 | | 12A | 1 | | | | 1 | | | 11 | | |
| | 7 | WB 91 | 120 | 1560 | | 1 | 65.63 | | 16B | | 1 | | | | | | 5 | | |
| | 8 | EB 91 | 144 | 1872 | 1 | | 18.75 | | 12C | | | 1 | | 1 | 10 | | 3 | | |
| | 9 | EB 91 to SB 57 | 355 | 4615 | | 1 | 218.75 | | 16B | | 1 | | | | 8 | 6 | 12 | | |
| | 11 | SB 57 to EB 91 | 250 | 3250 | | 1 | 31.25 | | 16A | 1 | | | | | | | 5 | | |
| | 12 | SB 57 to EB 91 | 250 | 3250 | | 1 | 125.00 | | 12DD | | | | 1 | | | | 6 | | |
| | | SB 57 to EB 91 (Rt) | | | | | | | | | | | | | 10 | 30 | | | |
| | 13 | NB 57 | 85 | 1105 | | 1 | 31.25 | | 16B | | 1 | | | | | | 4 | | |
| | 15 | SB 57 | 75 | 975 | 1 | | | | 12B | | 1 | | | 1 | | | 4 | | |
| | 16 | WB 91 to NB 57 | 350 | 4810 | | 1 | | 328.13 | 11B | | 1 | | | | | | 16 | | |
| | 17 | NB 57 to EB 91 | 63 | 819 | 1 | | | | 12B | | 1 | | | 1 | | | 4 | | |
| | 18 | NB 57 to EB 91 | 130 | 1690 | 1 | | 53.13 | | 12A | 1 | | | | 1 | | | 6 | | |
| | 19 | WB 91 | 90 | 1170 | | 1 | 40.63 | | 16B | | 1 | | | | | | 4 | | |
| L-2, L-6 | 10 | SB 57 to EB 91 | 600 | 7800 | 1 | | 534.38 | | 12B | | 1 | | | 1 | | | 25 | | |
| | 14 | WB 91 to NB 57 | 75 | 975 | | 1 | 31.25 | | 16B | | 1 | | | | | | 4 | | |
| L-2, L-3 | 20 | WB 91 to SB 57 | 285 | 3750 | 1 | | 212.50 | | 12B | | 1 | | | 1 | | | 12 | | |
| | 21 | EB 91 | 80 | 1040 | | 1 | 31.25 | | 16B | | 1 | | | | | | 4 | | |
| L-5 | 22 | EB 91 to SB 57 | 170 | 2210 | 1 | | 250.00 | | 16B, 12B | | 1 | | | 1 | | | 14 | | |
| | 23 | WB 91 to SB 57 | 75 | 975 | | 1 | 31.25 | | 16B | | 1 | | | | | | 4 | | |
| | 24 | NB 57 to EB 91 | 69 | 897 | | | | | N/A | | | | | | | | | | |
| L-6 | 25 | EB 91 to NB 57 | 275 | 3575 | | 1 | | 268.75 | 12DD | | | | 1 | | | | 12 | | |
| | 26 | EB 91 to NB 57 | | | | 1 | 68.75 | | 16A | 1 | | | | | | | 6 | | |
| | 27 | NB 57 | 82 | 1066 | | 1 | 87.50 | | 16A | 1 | | | | | | | 7 | | |
| | 28 | SB 57 to EB 91 | 150 | 1950 | | | | | N/A | | | | | | | | | 12 | 1 |
| | 29 | EB 91 to NB 57 | 75 | 975 | | 1 | 175.00 | | 11B | | 1 | | | | | | 10 | | |
| L-7 | 30 | EB 91 to NB 57 | 100 | 1300 | | | | | N/A | | | | | | | | | | |
| L-3 | 31 | WB 91 | 75 | 975 | | 1 | 31.25 | | 16B | | 1 | | | | | | 4 | | |
| | 32 | WB 91 to NB 57 | 255 | 3315 | 1 | | 370.80 | | 11A, 12A | 1 | | | | 1 | | | 19 | | |
| | 33 | WB 91 | 90 | 1170 | | 1 | 43.75 | | 16B | | 1 | | | | | | 5 | | |
| | 34 | WB 91 to SB 57 | 75 | 975 | | 1 | 31.25 | | 16A | 1 | | | | | | | 5 | | |
| | 35 | EB 91 | 130 | 1690 | 1 | | 43.75 | | 12B | | 1 | | | 1 | | | 5 | | |
| | 36 | WB 91, WB 91 to SB 57 | 130 | 1690 | | | | | N/A | | | | | | | | | 12 | 1 |
| | 37 | WB 91 | 160 | 2080 | | 1 | 118.75 | | 16B | | 1 | | | | | | 8 | | |
| L-4 | 38 | WB 91 | 200 | 2600 | | 1 | 156.25 | | 16B | | 1 | | | | | | 9 | | |
| L-8 | 39 | EB 91 | 63 | 819 | 1 | | | | 12B | | 1 | | | 1 | | | 4 | | |
| | 40 | NB 55 to WB 91 | 185 | 2405 | | | | | N/A | | | | | | | | | | |
| | 41 | NB 55 to WB 91 | 185 | 2405 | | | | | N/A | | | | | | | | | | |
| | 42 | EB 91 | 163 | 2119 | 1 | | 100.00 | | 12B | | 1 | | | 1 | | | 8 | | |
| | 43 | WB 91 | 360 | 4680 | | 1 | | | N/A | | | | | | | | | | |
| | 44 | WB 91 | 225 | 2925 | | | 225.00 | | 12DD | | | | 1 | | | | 10 | | |
| L-8, L-9 | 45 | WB 91 to SB 55 | 355 | 4615 | | | | | N/A | | | | | | | | | | |
| | 46 | EB 91 | 775 | 10075 | | | | | N/A | | | | | | | | | | |
| L-9 | 47 | EB 91 | 75 | 975 | | 1 | 31.25 | | 16A | 1 | | | | | | | 5 | | |
| | 48 | WB 91 | 607 | 7891 | | | 606.25 | | 16B, 11B | | 1 | | | | | | 27 | | |
| SHEET TOTAL | | | 9508 | 123604 | 16 | 22 | 4527.05 | 628.13 | | 10 | 23 | 3 | 3 | 16 | 48 | 36 | 321 | 24 | 2 |

(N) : NONE PAY ITEM (FOR INFORMATION ONLY)

## SUMMARY OF QUANTITIES

Q-1

STATE OF CALIFORNIA - DEPARTMENT OF TRANSPORTATION
Caltrans® DESIGN DIVISION

FUNCTIONAL SUPERVISOR: MILI LIM STAMATION
CALCULATED-DESIGNED BY: KIMBERLY NGUYEN
CHECKED BY: RICK NGO
REVISED BY
DATE REVISED

LAST REVISION 07-28-16
DATE PLOTTED => 30-AUG-2016
TIME PLOTTED => 14:22

| Dist | COUNTY | ROUTE | POST MILES TOTAL PROJECT | SHEET No. | TOTAL SHEETS |
|---|---|---|---|---|---|
| 12 | Ora | 55, 57, 91 | 17.5/17.9; 15.2/16.0 5.8/6.8; 8.7/R9.5 | 62 | 95 |

REGISTERED CIVIL ENGINEER 07-26-16 DATE

07-25-16
PLANS APPROVAL DATE

REGISTERED PROFESSIONAL ENGINEER KIMBERLY NGUYEN No. C 64577 Exp. 6/30/17 CIVIL STATE OF CALIFORNIA

*THE STATE OF CALIFORNIA OR ITS OFFICERS OR AGENTS SHALL NOT BE RESPONSIBLE FOR THE ACCURACY OR COMPLETENESS OF SCANNED COPIES OF THIS PLAN SHEET.*

# HOT MIX ASPHALT QUANTITIES

| SHEET No. | LOCATION # | DIRECTION | REMOVE ASPHALT CONCRETE | | PLACE HMA (MISCELLANEOUS AREA) | PLACE HMA DIKE | | HOT MIX ASPHALT (TYPE A) |
|---|---|---|---|---|---|---|---|---|
| | | | SURFACING | DIKE | | TYPE A | TYPE C | |
| | | | SQFT | LF | SQYD | LF | LF | TON |
| L-1 | 1 | SB 57 to WB 91 | | 90.0 | | | 90.0 | 0.69 |
| | 2 | SB 57 to WB 91 | | 62.5 | | | 62.5 | 0.48 |
| L-1, L-2 | 4 | EB 91 to NB 57 | | 75.0 | | | 75.0 | 0.58 |
| L-2 | 18 | NB 57 to EB 91 | | 75.0 | | | 75.0 | 0.58 |
| L-2, L-6 | 14 | WB 91 to NB 57 | | 62.5 | | | 62.5 | 0.48 |
| L-5 | 22 | EB 91 to SB 57 | | 87.5 | | 87.5 | | 2.39 |
| | 24 | NB 57 to EB 91 | 150 | | | | | |
| L-6 | 27 | NB 57 | | 75.0 | | | 75.0 | 0.58 |
| | 28 | SB 57 to EB 91 | 10 | | 2 | | | 0.45 |
| | 29 | EB 91 to NB 57 | | 207.0 | | 144.0 | 62.5 | 4.42 |
| L-7 | 30 | EB 91 to NB 57 | | | 1 | | | 0.23 |
| L-3 | 36 | WB 91, WB 91 to SB 57 | | | 149 | | | 33.53 |
| L-8 | 40 | NB 55 to WB 91 | | 185 | 62 | | | 13.95 |
| | 41 | NB 55 to WB 91 | 350 | | 31 | | | 6.98 |
| | 43 | WB 91 | 350 | | | | | |
| L-8, L-9 | 45 | NB 55 TO WB 91 | | 355.0 | | | | |
| | 46 | EB 91 | | 755.0 | | | | |
| L-9 | 47 | EB 91 | | 75.0 | | | 75.0 | 0.58 |
| SHEET TOTAL | | | 860 | 2104.5 | 245 | 231.5 | 577.5 | 65.92 |

## SUMMARY OF QUANTITIES

Q-2

STATE OF CALIFORNIA - DEPARTMENT OF TRANSPORTATION
Caltrans DESIGN DIVISION

FUNCTIONAL SUPERVISOR: MILI LIM STAMATION
CALCULATED-DESIGNED BY: KIMBERLY NGUYEN
CHECKED BY: RICK NGO
REVISED BY
DATE REVISED

LAST REVISION 07-28-16
DATE PLOTTED => 30-AUG-2016
TIME PLOTTED => 14:22

| Dist | COUNTY | ROUTE | POST MILES TOTAL PROJECT | SHEET No. | TOTAL SHEETS |
|---|---|---|---|---|---|
| 12 | Ora | 55, 57, 91 | 17.5/17.9; 15.2/16.0 5.8/6.8; 8.7/R9.5 | 63 | 95 |

REGISTERED CIVIL ENGINEER 07-26-16 DATE

07-25-16
PLANS APPROVAL DATE

REGISTERED PROFESSIONAL ENGINEER KIMBERLY NGUYEN No. C 64577 Exp. 6/30/17 CIVIL STATE OF CALIFORNIA

*THE STATE OF CALIFORNIA OR ITS OFFICERS OR AGENTS SHALL NOT BE RESPONSIBLE FOR THE ACCURACY OR COMPLETENESS OF SCANNED COPIES OF THIS PLAN SHEET.*

## CONCRETE BARRIER AND ANCHOR BLOCK

| SHEET No. | LOCATION # | DIRECTION | CONCRETE BARRIER TRANSITION | CONCRETE ANCHOR BLOCK (N) | MINOR CONCRETE (MINOR STRUCTURE) | VEGETATION CONTROL (MINOR CONCRETE) | AGGREGATE BASE | CONCRETE BARRIER | | | | | | CONCRETE BARRIER MARKER |
|---|---|---|---|---|---|---|---|---|---|---|---|---|---|---|
| | | | | | | | | TYPE 9 | TYPE 60 | TYPE 60C | TYPE 60G | TYPE 60F | TYPE (732B) | |
| | | | LF | EA | CY | SQYD | CY | LF | LF | LF | LF | LF | LF | EA |
| L-1 | 1 | SB 57 to WB 91 | 10 | 1 | 0.75 | | | | | | | | | |
| | 3 | EB 91 to SB 57 | 10 | 1 | 0.75 | | | | | | | | | |
| L-1, L-2 | 4 | EB 91 to NB 57 | | 1 | 0.75 | | | | | | | | | |
| | 5 | EB 91 | 20 | 1 | 0.75 | | 7.1 | | 72 | | | | | 3 |
| L-2 | 6 | EB 91 to NB 57 | | 1 | 0.75 | | | | | | | | | |
| | 8 | EB 91 | 40 | 1 | 0.75 | | 4.2 | | | | 16 | | | 3 |
| | 11 | SB 57 to EB 91 | | | | 10.22 | | | | | | | | |
| | 12 | SB 57 to EB 91 | | 1 | 0.75 | | | | | | | | | |
| | 17 | NB 57 to EB 91 | | 1 | 1.25 | 9.33 | | | | | | | | |
| | 18 | NB 57 to EB 91 | | | | 14.89 | | | | | | | | |
| L-2, L-6 | 10 | SB 57 to EB 91 | | 1 | 0.75 | | | | | | | | | |
| L-2, L-3 | 20 | WB 91 to SB 57 | | 1 | 0.75 | | | | | | | | | |
| L-5 | 22 | EB 91 to SB 57 | | 1 | 0.75 | | | | | | | | | |
| | 24 | NB 57 to EB 91 | | | | | | 78 | | | | | | 3 |
| L-6 | 25 | EB 91 to NB 57 | | 1 | 0.75 | | | | | | | | | |
| | 28 | SB 57 to EB 91 | | | 4.00 | | | | | | | 61 | | 8 |
| L-3 | 32 | WB 91 to NB 57 | 10 | 1 | 0.75 | | | | | | | | | |
| | 35 | EB 91 | 23 | | | | | | | | | | | |
| | 36 | WB 91, WB 91 to SB 57 | | | 4.00 | | | | | | | 122 | | 14 |
| L-8 | 39 | EB 91 | 10 | 1 | 0.75 | | | | | | | | | |
| | 40 | NB 55 to WB 91 | 50 | | | | 13.7 | | 185 | | | | | 9 |
| | 41 | NB 55 to WB 91 | 50 | | | | 13.5 | | 182 | | | | | 9 |
| | 42 | EB 91 | 9.75 | | | | | | | | | | | |
| | 43 | WB 91 | | | | | 13.0 | | | 175 | | | | 8 |
| | 44 | WB 91 | 10 | | | | 16.6 | | 214 | | | | | 10 |
| L-8, L-9 | 45 | WB 91 to SB 55 | 16.25 | | | | 26.3 | | | | | | 338 | 15 |
| | 46 | EB 91 | 13 | | | | 55.6 | | | 750 | | | | 31 |
| SHEET TOTAL | | | 272.00 | 14 | 19.00 | 34.44 | 150.0 | 78 | 653 | 925 | 16 | 183 | 338 | 110 |

(N) : NONE PAY ITEM (FOR INFORMATION ONLY)

## TEMPORARY WATER POLLUTION CONTROL

| SHEET No. | LOCATION # | DIRECTION | TEMPORARY DRAINAGE INLET PROTECTION | TEMPORARY FIBER ROLL |
|---|---|---|---|---|
| | | | EA | LF |
| L-1 | 3 | EB 91 TO SB 57 | 1 | |
| | 1 | SB 57 TO WB 91 | 1 | |
| | 4 | EB 91 TO NB 57 | 1 | |
| L-2 | 4 | EB 91 TO NB 57 | 1 | |
| | | SB 57 TO EB 91 | 1 | |
| | | SB 57 AND WB 91 | 1 | |
| | | NB 57 TO EB 91 | 1 | |
| | | WB 91 TO NB 57 | | 100 |
| L-8 | 39 | EB 91 | 1 | |
| | 46 | EB 91 | 1 | |
| | 45 | WB 91 TO SB 55 | 1 | |
| | 43 | WB 91 | 1 | |
| L-9 | 45 | WB 91 TO SB 55 | 1 | |
| | 46 | EB 91 | 1 | |
| SHEET TOTAL | | | 13 | 100 |

## SUMMARY OF QUANTITIES

Q-3

STATE OF CALIFORNIA - DEPARTMENT OF TRANSPORTATION
Caltrans® DESIGN DIVISION

FUNCTIONAL SUPERVISOR: MILI LIM STAMATION
CALCULATED-DESIGNED BY: KIMBERLY NGUYEN
CHECKED BY: RICK NGO
REVISED BY
DATE REVISED

LAST REVISION 07-28-16
DATE PLOTTED => 30-AUG-2016
TIME PLOTTED => 14:22

| Dist | COUNTY | ROUTE | POST MILES TOTAL PROJECT | SHEET No. | TOTAL SHEETS |
|---|---|---|---|---|---|
| 12 | Ora | 55, 57, 91 | 17.5/17.9; 15.2/16.0 5.8/6.8; 8.7/R9.5 | 64 | 95 |

Vanessa Van Truong 07-26-16
REGISTERED ELECTRICAL ENGINEER DATE

07-25-16
PLANS APPROVAL DATE

REGISTERED PROFESSIONAL ENGINEER V.V. TRUONG No. E 13983 Exp 6/30/18 ELECTRICAL STATE OF CALIFORNIA

*THE STATE OF CALIFORNIA OR ITS OFFICERS OR AGENTS SHALL NOT BE RESPONSIBLE FOR THE ACCURACY OR COMPLETENESS OF SCANNED COPIES OF THIS PLAN SHEET.*

## NOTES:

1. FOR ACCURATE RIGHT OF WAY DATA, CONTACT RIGHT OF WAY ENGINEERING AT THE DISTRICT OFFICE.
2. SEE SHEET E-15 FOR WIRING DIAGRAM.

## LEGEND: (FOR SHEET E-2 TO E-14)

▭ (TR) No. 5 TRAFFIC-RATED PULL BOX WITH TAMPER RESISTANT COVER.

160′ HIGH MAST LIGHTING ASSEMBLY WITH 8 LUMINAIRES, EACH WITH 9 LED MODULES (3008 W), LOWERING DEVICE. SEE SES-1 AND E-17 FOR DETAILS. INSTALL HIGH MAST LIGHTING ASSEMBLY UNDER THE SUPERVISION OF A TRAINED MANUFACTURER'S REPRESENTATIVE.

160′ HIGH MAST LIGHTING ASSEMBLY WITH 6 LUMINAIRES, EACH WITH 9 LED MODULES (2256 W), LOWERING DEVICE. SEE SES-1 AND E-17 FOR DETAILS INSTALL HIGH MAST LIGHTING ASSEMBLY UNDER THE SUPERVISION OF A TRAINED MANUFACTURER'S REPRESENTATIVE.

## ABBREVIATION:

HM HIGH MAST

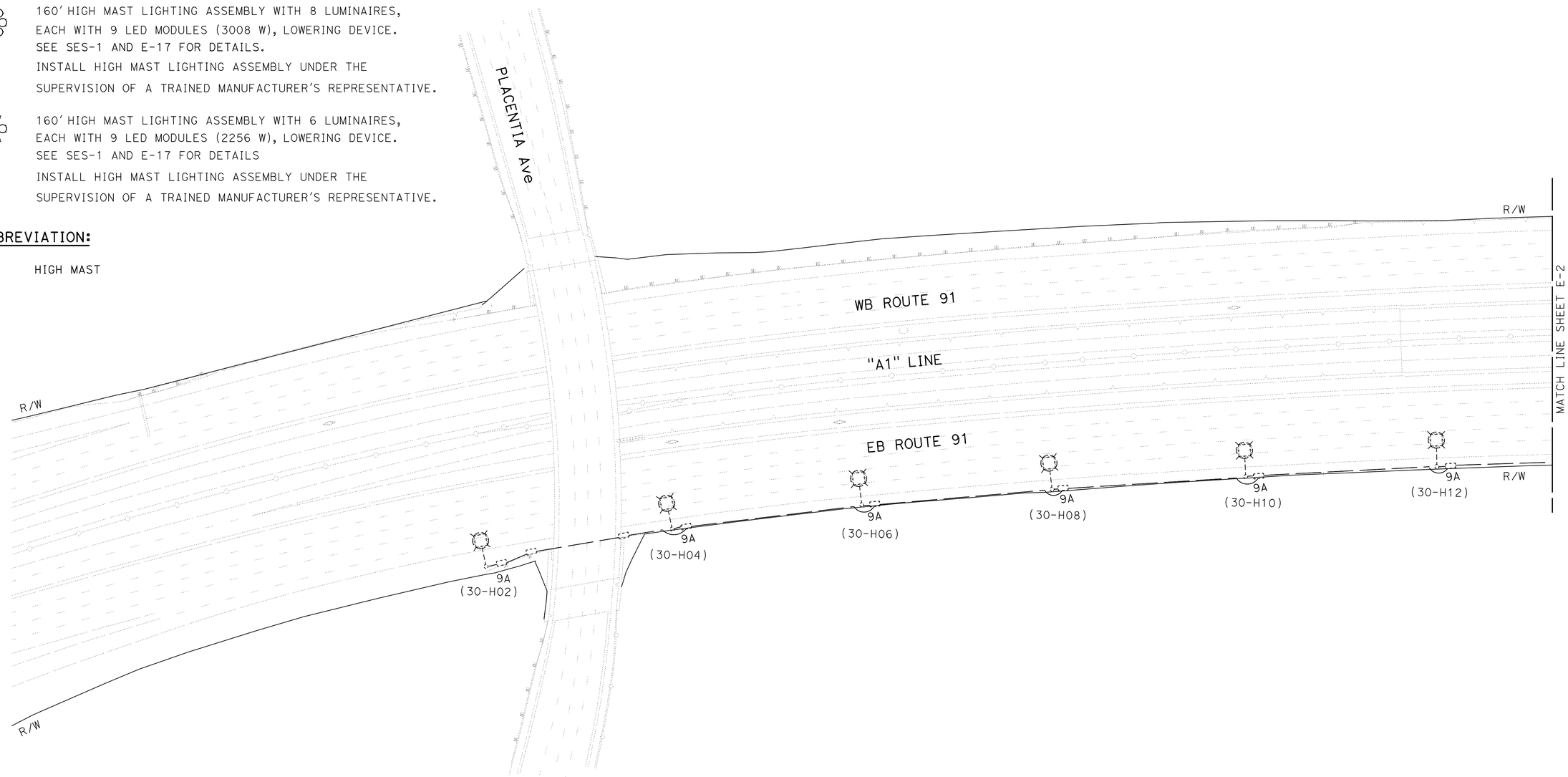


# MODIFYING EXISTING ELECTRICAL SYSTEM

SCALE: 1" = 50′

*APPROVED FOR ELECTRICAL WORK ONLY*

**E-1**

STATE OF CALIFORNIA - DEPARTMENT OF TRANSPORTATION
Caltrans® **ELECTRICAL DESIGN**

FUNCTIONAL SUPERVISOR: SHAHRAM SHAHRIARI
CALCULATED-DESIGNED BY: VANESSA TRUONG
CHECKED BY: SHAHRAM SHAHRIARI
REVISED BY / DATE REVISED

LAST REVISION 07-28-16
DATE PLOTTED => 30-AUG-2016
TIME PLOTTED => 14:22

| Dist | COUNTY | ROUTE | POST MILES TOTAL PROJECT | SHEET No. | TOTAL SHEETS |
|---|---|---|---|---|---|
| 12 | Ora | 55, 57, 91 | 17.5/17.9; 15.2/16.0 5.8/6.8; 8.7/R9.5 | 65 | 95 |

Vanessa Van Truong 07-26-16
REGISTERED ELECTRICAL ENGINEER DATE

07-25-16
PLANS APPROVAL DATE

REGISTERED PROFESSIONAL ENGINEER V.V. TRUONG No. E 13983 Exp 6/30/18 ELECTRICAL STATE OF CALIFORNIA

*THE STATE OF CALIFORNIA OR ITS OFFICERS OR AGENTS SHALL NOT BE RESPONSIBLE FOR THE ACCURACY OR COMPLETENESS OF SCANNED COPIES OF THIS PLAN SHEET.*

## NOTES:

1. FOR ACCURATE RIGHT OF WAY DATA, CONTACT RIGHT OF WAY ENGINEERING AT THE DISTRICT OFFICE.
2. MINIMUM 4′ CLEARANCE IS REQUIRED FROM THE FACE OF FIXED OBJECT TO THE FACE OF MGS RAILING.
3. SEE SHEET E-15 FOR WIRING DIAGRAM.
4. INSTALL 2"C, 2#6, 1#8 (G), UNLESS OTHERWISE NOTED.
5. PROTECT IN PLACE EXISTING FIBER OPTIC CONDUITS AND CABLES. SEE UTILITY PLANS.
6. ALL ELECTRICAL INSTALLATION MUST BE WITHIN DEPARTMENT R/W.

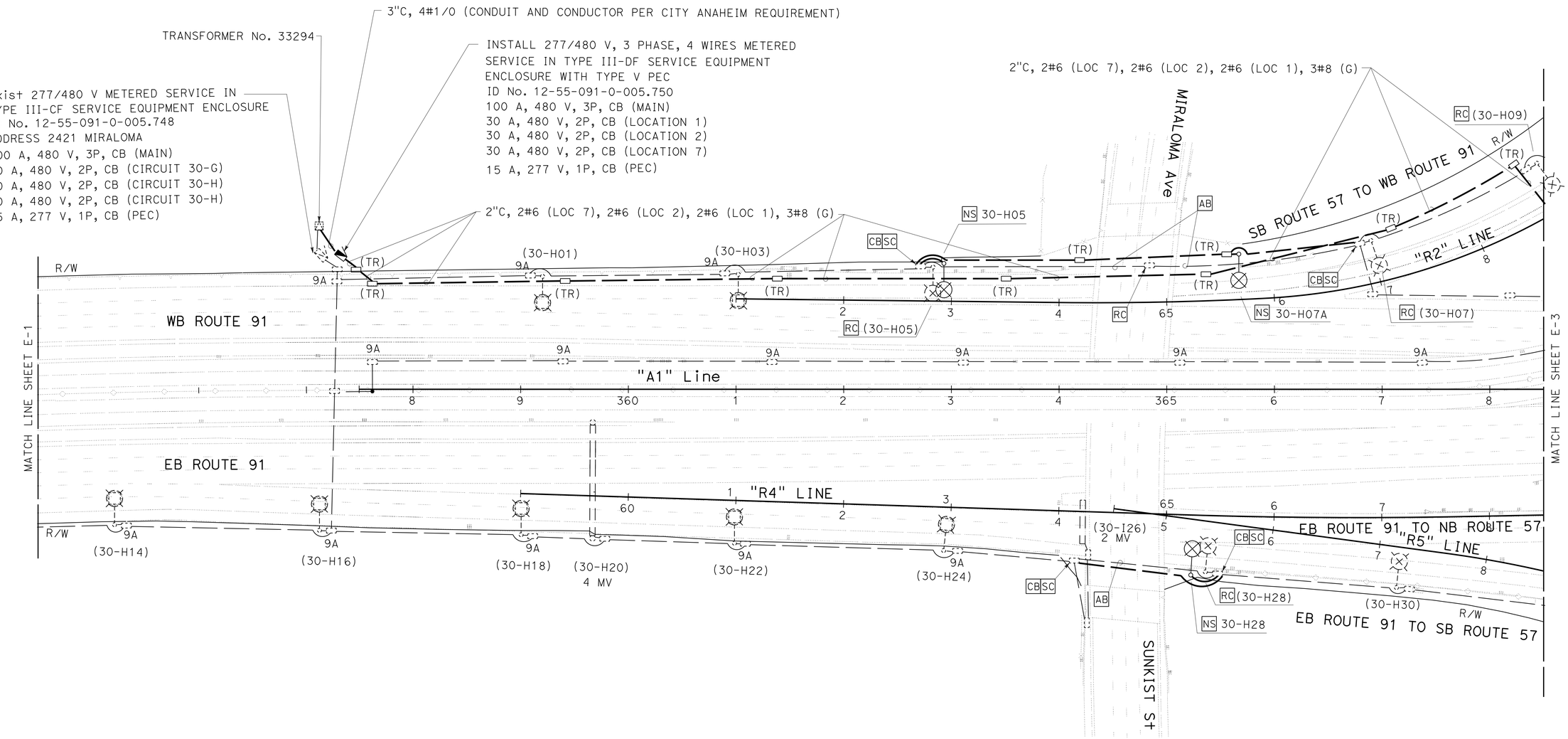


FOR LEGEND AND ABBREVIATION, SEE SHEET E-1

# MODIFYING EXISTING ELECTRICAL SYSTEM

SCALE: 1" = 50′

*APPROVED FOR ELECTRICAL WORK ONLY*

**E-2**

STATE OF CALIFORNIA - DEPARTMENT OF TRANSPORTATION
Caltrans
ELECTRICAL DESIGN
FUNCTIONAL SUPERVISOR: SHAHRAM SHAHRIARI
CALCULATED-DESIGNED BY: VANESSA TRUONG
CHECKED BY: SHAHRAM SHAHRIARI
REVISED BY
DATE REVISED

LAST REVISION 07-28-16
DATE PLOTTED => 30-AUG-2016
TIME PLOTTED => 14:22

| Dist | COUNTY | ROUTE | POST MILES TOTAL PROJECT | SHEET No. | TOTAL SHEETS |
|---|---|---|---|---|---|
| 12 | Ora | 55, 57, 91 | 17.5/17.9; 15.2/16.0 5.8/6.8; 8.7/R9.5 | 66 | 95 |

Vanessa Van Truong 07-26-16
REGISTERED ELECTRICAL ENGINEER DATE

07-25-16
PLANS APPROVAL DATE

REGISTERED PROFESSIONAL ENGINEER V.V. TRUONG No. E 13983 Exp 6/30/18 ELECTRICAL STATE OF CALIFORNIA

*THE STATE OF CALIFORNIA OR ITS OFFICERS OR AGENTS SHALL NOT BE RESPONSIBLE FOR THE ACCURACY OR COMPLETENESS OF SCANNED COPIES OF THIS PLAN SHEET.*

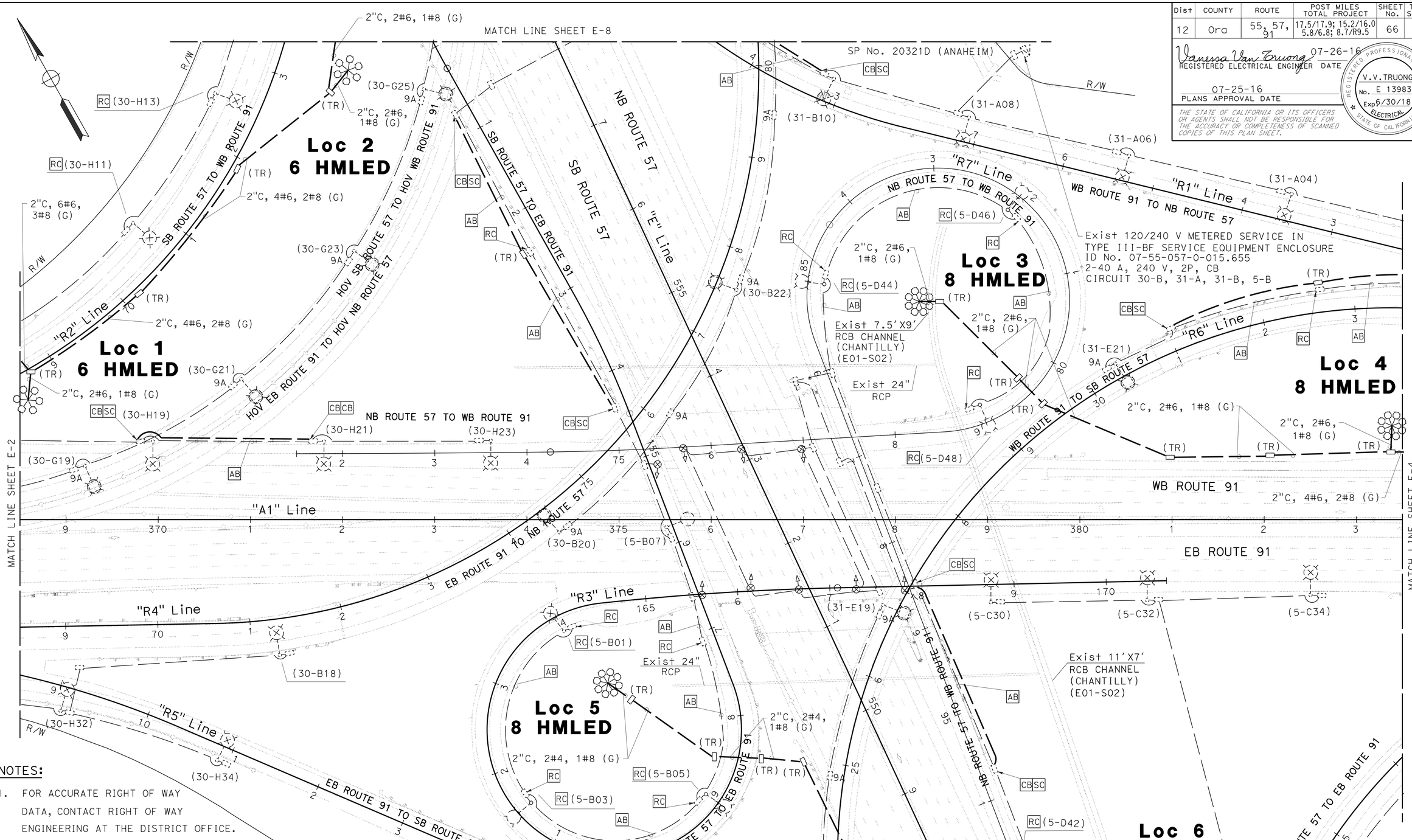


NOTES:

1. FOR ACCURATE RIGHT OF WAY DATA, CONTACT RIGHT OF WAY ENGINEERING AT THE DISTRICT OFFICE.
2. MINIMUM 4' CLEARANCE IS REQUIRED FROM THE FACE OF FIXED OBJECT TO MGS RAILING.
3. SEE SHEET E-15 FOR WIRING DIAGRAM.
4. INSTALL 2"C, 2#6, 1#8 (G), UNLESS OTHERWISE NOTED.
5. PROTECT IN PLACE EXISTING FIBER OPTIC CONDUITS AND CABLES. SEE UTILITY PLANS.
6. MINIMUM 30' CLEARANCE IS REQUIRED FROM THE FACE OF FIXED OBJECT TO ETW.

FOR LEGEND AND ABBREVIATION, SEE SHEET E-1

*APPROVED FOR ELECTRICAL WORK ONLY*

# MODIFYING EXISTING ELECTRICAL SYSTEM

SCALE: 1" = 50'

E-3

STATE OF CALIFORNIA - DEPARTMENT OF TRANSPORTATION
Caltrans® ELECTRICAL DESIGN

FUNCTIONAL SUPERVISOR: SHAHRAM SHAHRIARI
CALCULATED-DESIGNED BY: VANESSA TRUONG
CHECKED BY: SHAHRAM SHAHRIARI
REVISED BY
DATE REVISED

LAST REVISION 07-28-16
DATE PLOTTED => 30-AUG-2016
TIME PLOTTED => 14:22

| Dist | COUNTY | ROUTE | POST MILES TOTAL PROJECT | SHEET No. | TOTAL SHEETS |
|---|---|---|---|---|---|
| 12 | Ora | 55, 57, 91 | 17.5/17.9; 15.2/16.0 5.8/6.8; 8.7/R9.5 | 67 | 95 |

Vanessa Van Truong 07-26-16
REGISTERED ELECTRICAL ENGINEER DATE

07-25-16
PLANS APPROVAL DATE

REGISTERED PROFESSIONAL ENGINEER V.V. TRUONG No. E 13983 Exp 6/30/18 ELECTRICAL STATE OF CALIFORNIA

*THE STATE OF CALIFORNIA OR ITS OFFICERS OR AGENTS SHALL NOT BE RESPONSIBLE FOR THE ACCURACY OR COMPLETENESS OF SCANNED COPIES OF THIS PLAN SHEET.*

## NOTES:

1. FOR ACCURATE RIGHT OF WAY DATA, CONTACT RIGHT OF WAY ENGINEERING AT THE DISTRICT OFFICE.
2. MINIMUM 4′ CLEARANCE IS REQUIRED FROM THE FACE OF FIXED OBJECT TO THE FACE OF MGS RAILING.
3. SEE SHEET E-15 FOR WIRING DIAGRAM.
4. INSTALL 2"C, 2#6, 1#8 (G), UNLESS OTHERWISE NOTED.
5. PROTECT IN PLACE EXISTING FIBER OPTIC CONDUITS AND CABLES. SEE UTILITY PLANS.
6. ALL ELECTRICAL INSTALLATION MUST BE WITHIN DEPARTMENT R/W.

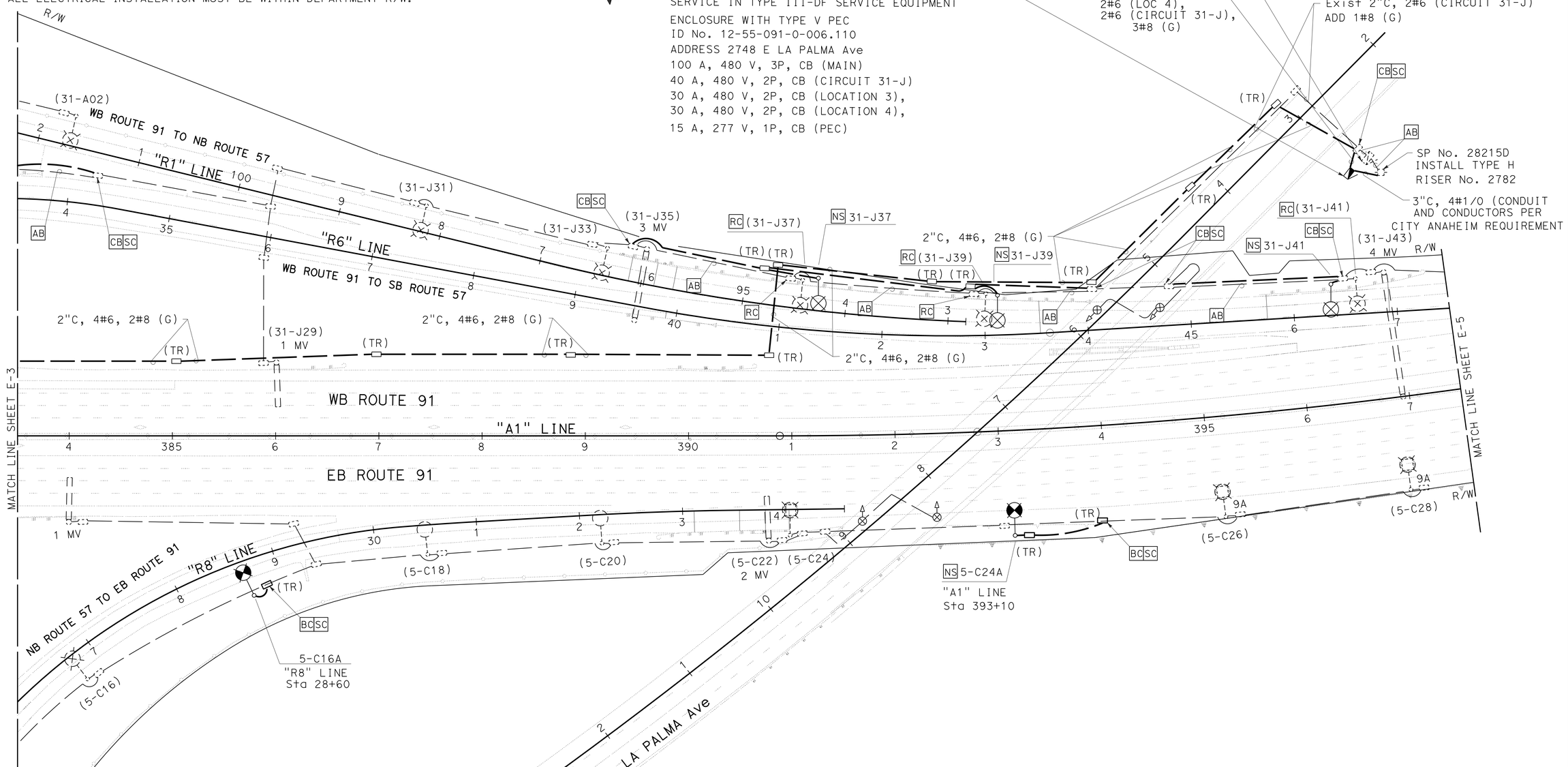


FOR LEGEND AND ABBREVIATION, SEE SHEET E-1

# MODIFYING EXISTING ELECTRICAL SYSTEM

SCALE: 1" = 50′

*APPROVED FOR ELECTRICAL WORK ONLY*

**E-4**

STATE OF CALIFORNIA - DEPARTMENT OF TRANSPORTATION
Caltrans® ELECTRICAL DESIGN

FUNCTIONAL SUPERVISOR: SHAHRAM SHAHRIARI
CALCULATED-DESIGNED BY: VANESSA TRUONG
CHECKED BY: SHAHRAM SHAHRIARI
REVISED BY
DATE REVISED

LAST REVISION 07-28-16
DATE PLOTTED => 30-AUG-2016
TIME PLOTTED => 14:22

| Dist | COUNTY | ROUTE | POST MILES TOTAL PROJECT | SHEET No. | TOTAL SHEETS |
|---|---|---|---|---|---|
| 12 | Ora | 55, 57, 91 | 17.5/17.9; 15.2/16.0 5.8/6.8; 8.7/R9.5 | 68 | 95 |

Vanessa Van Truong 07-26-16
REGISTERED ELECTRICAL ENGINEER DATE

07-25-16
PLANS APPROVAL DATE

REGISTERED PROFESSIONAL ENGINEER V.V. TRUONG No. E 13983 Exp. 6/30/18 ELECTRICAL STATE OF CALIFORNIA

*THE STATE OF CALIFORNIA OR ITS OFFICERS OR AGENTS SHALL NOT BE RESPONSIBLE FOR THE ACCURACY OR COMPLETENESS OF SCANNED COPIES OF THIS PLAN SHEET.*

## NOTES:

1. FOR ACCURATE RIGHT OF WAY DATA, CONTACT RIGHT OF WAY ENGINEERING AT THE DISTRICT OFFICE.
2. MINIMUM 4′ CLEARANCE IS REQUIRED FROM THE FACE OF FIXED OBJECT TO THE FACE OF MGS RAILING.
3. SEE SHEET E-15 FOR WIRING DIAGRAM.
4. INSTALL 2"C, 2#6, 1#8 (G), UNLESS OTHERWISE NOTED.
5. PROTECT IN PLACE EXISTING FIBER OPTIC CONDUITS AND CABLES. SEE UTILITY PLANS.
6. MINIMUM 30′ CLEARANCE IS REQUIRED FROM THE FACE OF FIXED OBJECT TO ETW.

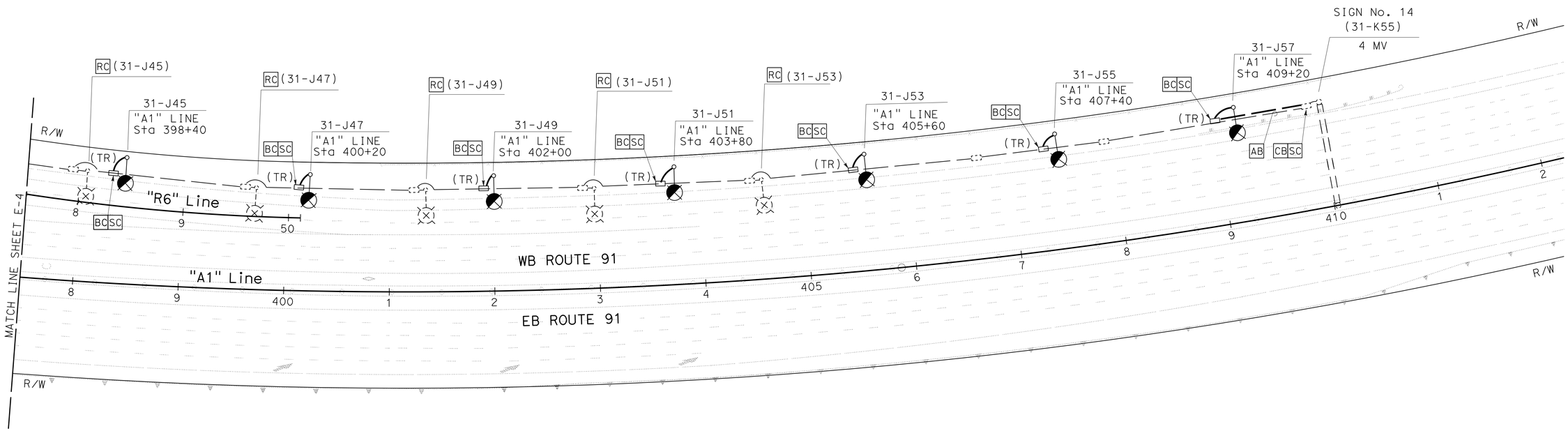


FOR LEGEND AND ABBREVIATION, SEE SHEET E-1

# MODIFYING EXISTING ELECTRICAL SYSTEM

SCALE: 1" = 50′

*APPROVED FOR ELECTRICAL WORK ONLY*

**E-5**

STATE OF CALIFORNIA - DEPARTMENT OF TRANSPORTATION
Caltrans® **ELECTRICAL DESIGN**

FUNCTIONAL SUPERVISOR: SHAHRAM SHAHRIARI

CALCULATED-DESIGNED BY: VANESSA TRUONG
CHECKED BY: SHAHRAM SHAHRIARI

REVISED BY
DATE REVISED

LAST REVISION 07-28-16
DATE PLOTTED => 30-AUG-2016
TIME PLOTTED => 14:22

| Dist | COUNTY | ROUTE | POST MILES TOTAL PROJECT | SHEET No. | TOTAL SHEETS |
|---|---|---|---|---|---|
| 12 | Ora | 55, 57, 91 | 17.5/17.9; 15.2/16.0 5.8/6.8; 8.7/R9.5 | 69 | 95 |

Vanessa Van Truong 07-26-16
REGISTERED ELECTRICAL ENGINEER DATE

07-25-16
PLANS APPROVAL DATE

REGISTERED PROFESSIONAL ENGINEER V.V. TRUONG No. E 13983 Exp. 6/30/18 ELECTRICAL STATE OF CALIFORNIA

*THE STATE OF CALIFORNIA OR ITS OFFICERS OR AGENTS SHALL NOT BE RESPONSIBLE FOR THE ACCURACY OR COMPLETENESS OF SCANNED COPIES OF THIS PLAN SHEET.*

## NOTES:

1. FOR ACCURATE RIGHT OF WAY DATA, CONTACT RIGHT OF WAY ENGINEERING AT THE DISTRICT OFFICE.
2. SEE SHEET E-15 FOR WIRING DIAGRAM.
3. INSTALL 2"C, 2#6, 1#8 (G), UNLESS OTHERWISE NOTED.
4. PROTECT IN PLACE EXISTING FIBER OPTIC CONDUITS AND CABLES. SEE UTILITY PLANS.

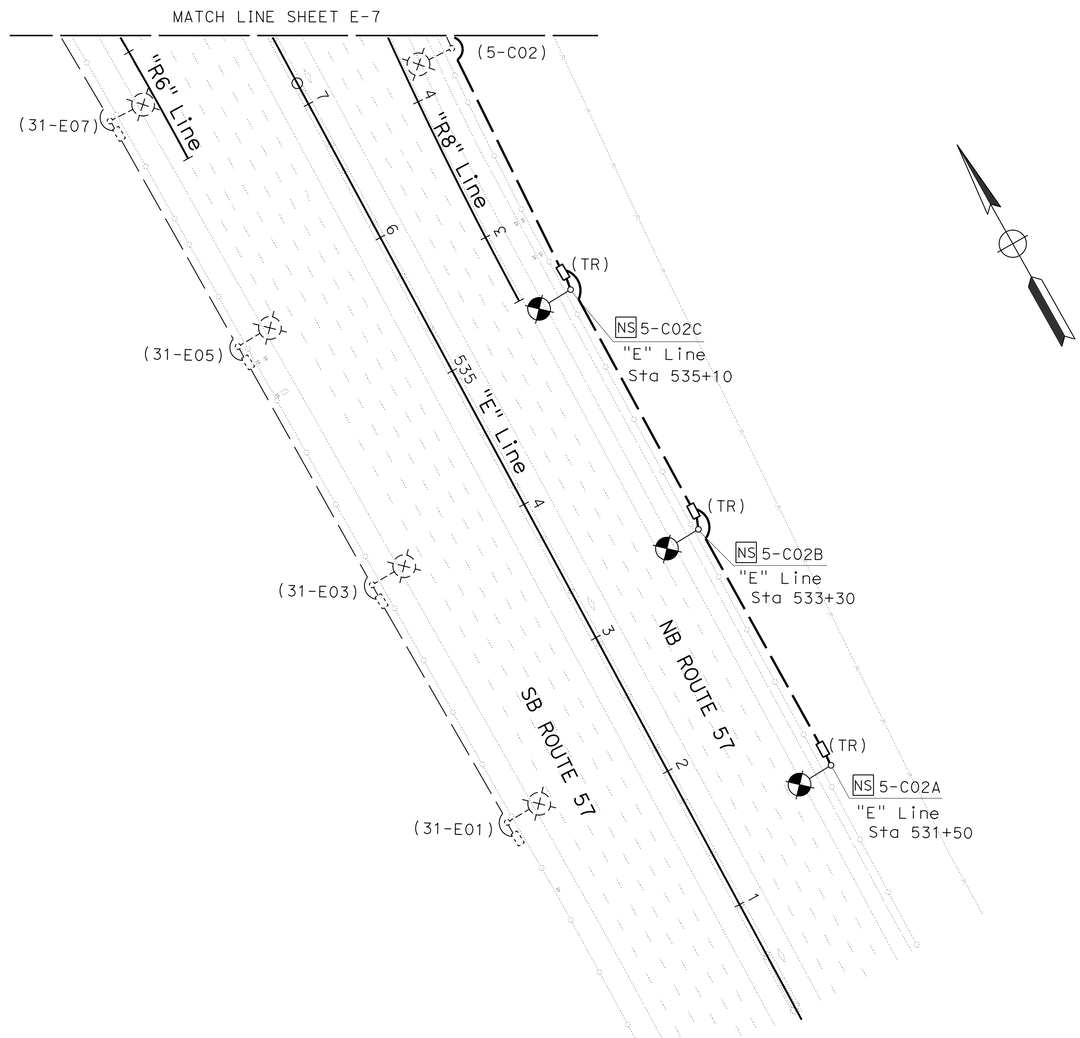


FOR LEGEND AND ABBREVIATION, SEE SHEET E-1

*APPROVED FOR ELECTRICAL WORK ONLY*

# MODIFYING EXISTING ELECTRICAL SYSTEM

SCALE: 1" = 50'

**E-6**

STATE OF CALIFORNIA - DEPARTMENT OF TRANSPORTATION
Caltrans® **ELECTRICAL DESIGN**

FUNCTIONAL SUPERVISOR: SHAHRAM SHAHRIARI
CALCULATED-DESIGNED BY: VANESSA TRUONG
CHECKED BY: SHAHRAM SHAHRIARI
REVISED BY
DATE REVISED

LAST REVISION DATE PLOTTED => 30-AUG-2016
07-28-16 TIME PLOTTED => 14:22

| Dist | COUNTY | ROUTE | POST MILES TOTAL PROJECT | SHEET No. | TOTAL SHEETS |
|---|---|---|---|---|---|
| 12 | Ora | 55, 57, 91 | 17.5/17.9; 15.2/16.0 5.8/6.8; 8.7/R9.5 | 70 | 95 |

Vanessa Van Truong 07-26-16
REGISTERED ELECTRICAL ENGINEER DATE

07-25-16
PLANS APPROVAL DATE

REGISTERED PROFESSIONAL ENGINEER V.V. TRUONG No. E 13983 Exp. 6/30/18 ELECTRICAL STATE OF CALIFORNIA

*THE STATE OF CALIFORNIA OR ITS OFFICERS OR AGENTS SHALL NOT BE RESPONSIBLE FOR THE ACCURACY OR COMPLETENESS OF SCANNED COPIES OF THIS PLAN SHEET.*

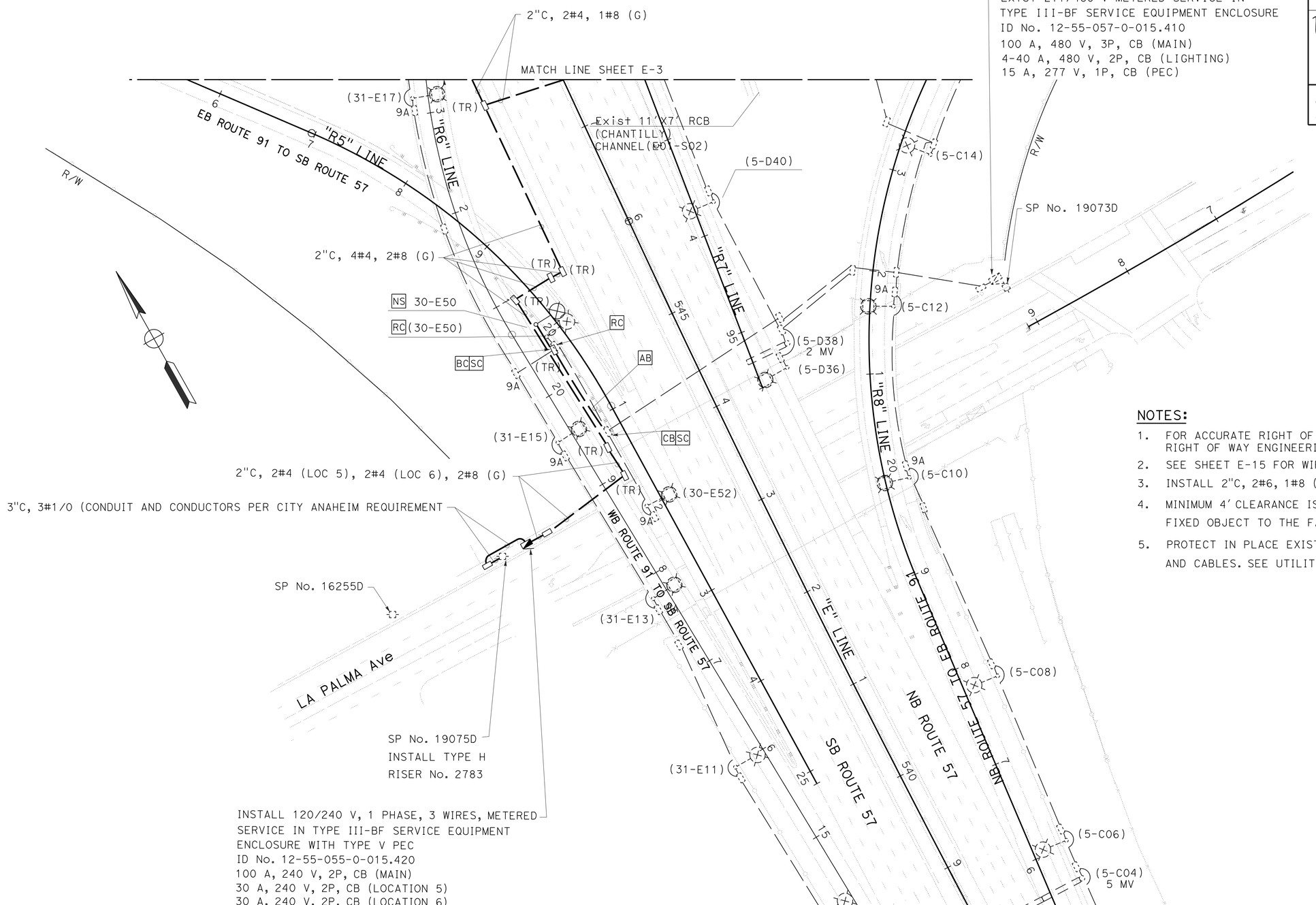


## NOTES:

1. FOR ACCURATE RIGHT OF WAY DATA, CONTACT RIGHT OF WAY ENGINEERING AT THE DISTRICT OFFICE.
2. SEE SHEET E-15 FOR WIRING DIAGRAM.
3. INSTALL 2"C, 2#6, 1#8 (G), UNLESS OTHERWISE NOTED.
4. MINIMUM 4' CLEARANCE IS REQUIRED FROM THE FACE OF FIXED OBJECT TO THE FACE OF MGS RAILING.
5. PROTECT IN PLACE EXISTING FIBER OPTIC CONDUITS AND CABLES. SEE UTILITY PLANS.

FOR LEGEND AND ABBREVIATION, SEE SHEET E-1

# MODIFYING EXISTING ELECTRICAL SYSTEM

SCALE: 1" = 50'

*APPROVED FOR ELECTRICAL WORK ONLY*

**E-7**

STATE OF CALIFORNIA - DEPARTMENT OF TRANSPORTATION
Caltrans® ELECTRICAL DESIGN

FUNCTIONAL SUPERVISOR: SHAHRAM SHAHRIARI
CALCULATED-DESIGNED BY: VANESSA TRUONG
CHECKED BY: SHAHRAM SHAHRIARI
REVISED BY
DATE REVISED

LAST REVISION DATE PLOTTED => 30-AUG-2016
07-28-16 TIME PLOTTED => 14:23

| Dist | COUNTY | ROUTE | POST MILES TOTAL PROJECT | SHEET No. | TOTAL SHEETS |
|---|---|---|---|---|---|
| 12 | Ora | 55, 57, 91 | 17.5/17.9; 15.2/16.0 5.8/6.8; 8.7/R9.5 | 71 | 95 |

Vanessa Van Truong 07-26-16
REGISTERED ELECTRICAL ENGINEER DATE

07-25-16
PLANS APPROVAL DATE

REGISTERED PROFESSIONAL ENGINEER V.V. TRUONG No. E 13983 Exp. 6/30/18 ELECTRICAL STATE OF CALIFORNIA

*THE STATE OF CALIFORNIA OR ITS OFFICERS OR AGENTS SHALL NOT BE RESPONSIBLE FOR THE ACCURACY OR COMPLETENESS OF SCANNED COPIES OF THIS PLAN SHEET.*

## NOTES:

1. FOR ACCURATE RIGHT OF WAY DATA, CONTACT RIGHT OF WAY ENGINEERING AT THE DISTRICT OFFICE.
2. MINIMUM 30′ CLEARANCE IS REQUIRED FROM THE FACE OF FIXED OBJECT TO ETW.
3. MINIMUM 4′ CLEARANCE IS REQUIRED FROM THE FACE OF FIXED OBJECT TO THE FACE OF MGS RAILING.
4. SEE SHEET E-15 FOR WIRING DIAGRAM.
5. INSTALL 2"C, 2#6, 1#8 (G), UNLESS OTHERWISE NOTED.
6. PROTECT IN PLACE EXISTING FIBER OPTIC CONDUITS CABLES. SEE UTILITY PLANS.

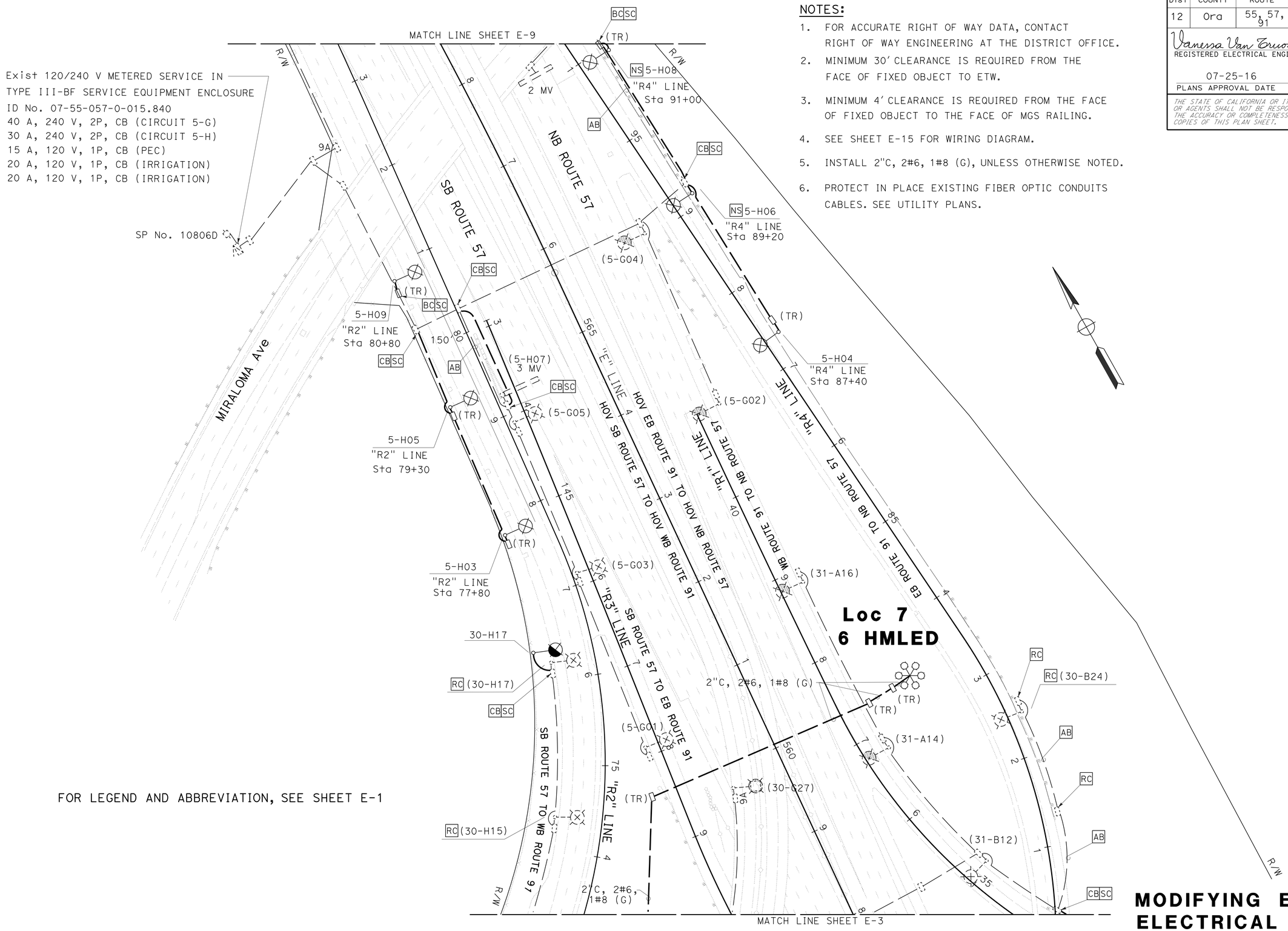


FOR LEGEND AND ABBREVIATION, SEE SHEET E-1

*APPROVED FOR ELECTRICAL WORK ONLY*

# MODIFYING EXISTING ELECTRICAL SYSTEM

SCALE: 1" = 50′

**E-8**

STATE OF CALIFORNIA - DEPARTMENT OF TRANSPORTATION
Caltrans® ELECTRICAL DESIGN

FUNCTIONAL SUPERVISOR: SHAHRAM SHAHRIARI
CALCULATED-DESIGNED BY: VANESSA TRUONG
CHECKED BY: SHAHRAM SHAHRIARI
REVISED BY
DATE REVISED

LAST REVISION DATE PLOTTED => 30-AUG-2016
07-28-16 TIME PLOTTED => 14:23

| Dist | COUNTY | ROUTE | POST MILES TOTAL PROJECT | SHEET No. | TOTAL SHEETS |
|---|---|---|---|---|---|
| 12 | Ora | 55, 57, 91 | 17.5/17.9; 15.2/16.0 5.8/6.8; 8.7/R9.5 | 72 | 95 |

Vanessa Van Truong 07-26-16
REGISTERED ELECTRICAL ENGINEER DATE

07-25-16
PLANS APPROVAL DATE

REGISTERED PROFESSIONAL ENGINEER V.V. TRUONG No. E 13983 Exp. 6/30/18 ELECTRICAL STATE OF CALIFORNIA

*THE STATE OF CALIFORNIA OR ITS OFFICERS OR AGENTS SHALL NOT BE RESPONSIBLE FOR THE ACCURACY OR COMPLETENESS OF SCANNED COPIES OF THIS PLAN SHEET.*

## NOTES:

1. FOR ACCURATE RIGHT OF WAY DATA, CONTACT RIGHT OF WAY ENGINEERING AT THE DISTRICT OFFICE.
2. SEE SHEET E-15 FOR WIRING DIAGRAM.
3. INSTALL 2"C, 2#6, 1#8 (G), UNLESS OTHERWISE NOTED.
4. PROTECT IN PLACE EXISTING FIBER OPTIC CONDUITS AND CABLES. SEE UTILITY PLANS.

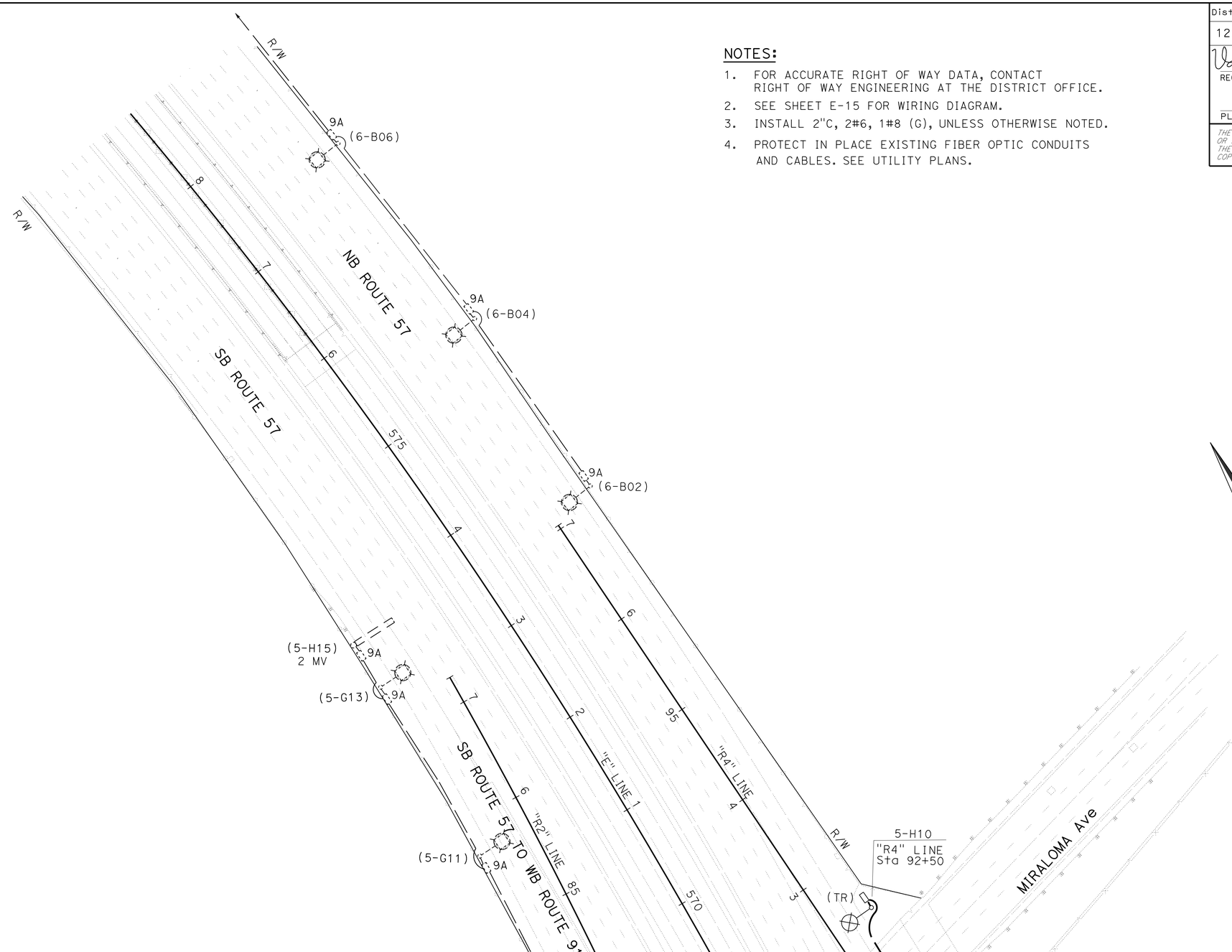


FOR LEGEND AND ABBREVIATION, SEE SHEET E-1

# MODIFYING EXISTING ELECTRICAL SYSTEM

SCALE: 1" = 50'

*APPROVED FOR ELECTRICAL WORK ONLY*

**E-9**

STATE OF CALIFORNIA - DEPARTMENT OF TRANSPORTATION
Caltrans ELECTRICAL DESIGN

FUNCTIONAL SUPERVISOR: SHAHRAM SHAHRIARI
CALCULATED-DESIGNED BY: VANESSA TRUONG
CHECKED BY: SHAHRAM SHAHRIARI
REVISED BY
DATE REVISED

LAST REVISION 07-28-16 | DATE PLOTTED => 30-AUG-2016 | TIME PLOTTED => 14:23

| Dist | COUNTY | ROUTE | POST MILES TOTAL PROJECT | SHEET No. | TOTAL SHEETS |
|---|---|---|---|---|---|
| 12 | Ora | 55, 57, 91 | 17.5/17.9; 15.2/16.0 5.8/6.8; 8.7/R9.5 | 73 | 95 |

Vanessa Van Truong 07-26-16
REGISTERED ELECTRICAL ENGINEER DATE

07-25-16
PLANS APPROVAL DATE

REGISTERED PROFESSIONAL ENGINEER V.V. TRUONG No. E 13983 Exp. 6/30/18 ELECTRICAL STATE OF CALIFORNIA

*THE STATE OF CALIFORNIA OR ITS OFFICERS OR AGENTS SHALL NOT BE RESPONSIBLE FOR THE ACCURACY OR COMPLETENESS OF SCANNED COPIES OF THIS PLAN SHEET.*

## NOTES:

1. FOR ACCURATE RIGHT OF WAY DATA, CONTACT RIGHT OF WAY ENGINEERING AT THE DISTRICT OFFICE.
2. SEE SHEET E-16 FOR WIRING DIAGRAM.
3. INSTALL 2"C, 2#6, 1#8 (G), UNLESS OTHERWISE NOTED.
4. PROTECT IN PLACE EXISTING FIBER OPTIC CONDUITS AND CABLES. SEE UTILITY PLANS.
5. MINIMUM 30' CLEARANCE IS REQUIRED FROM THE FACE OF FIXED OBJECT TO ETW.

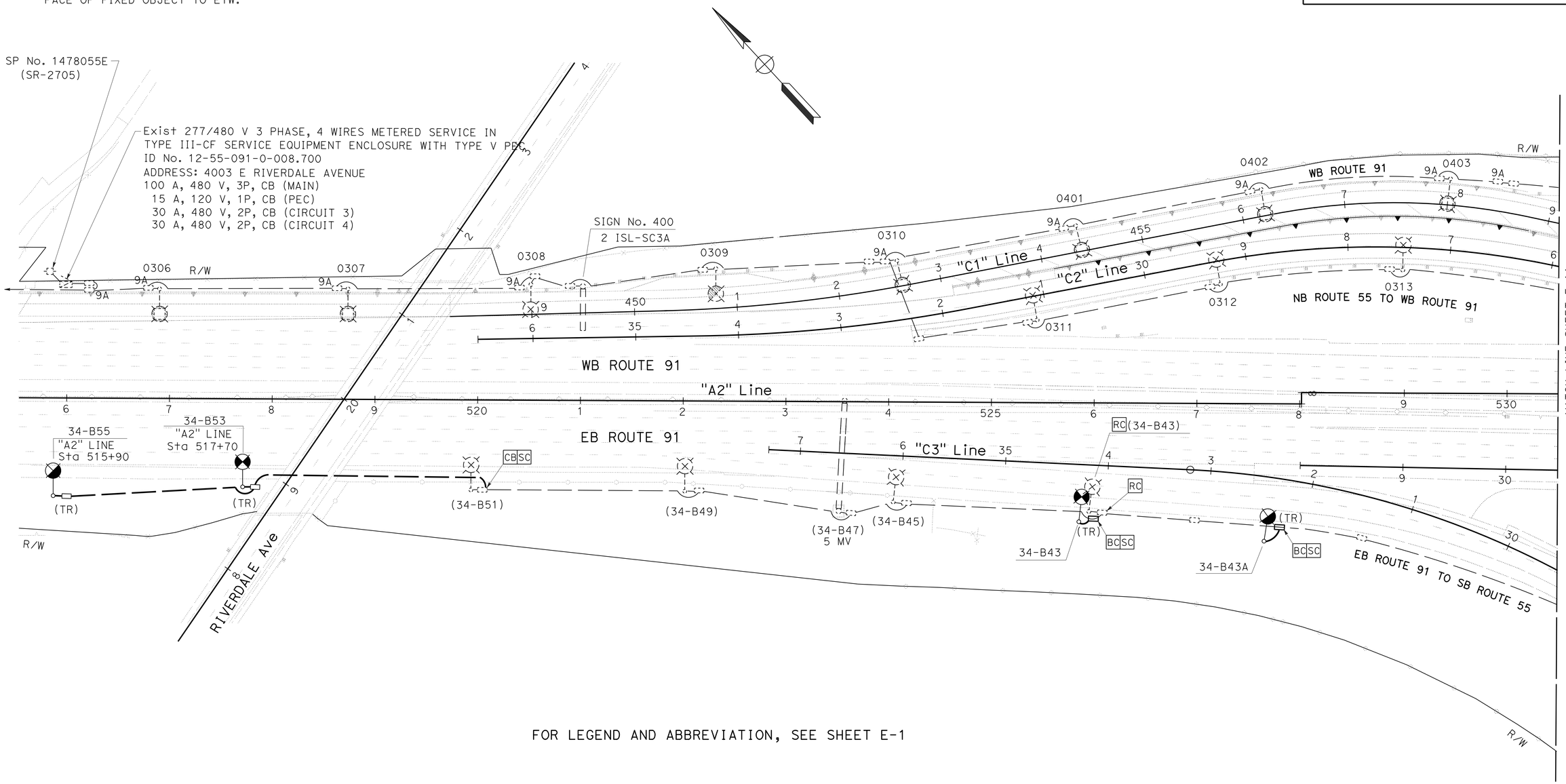


FOR LEGEND AND ABBREVIATION, SEE SHEET E-1

# MODIFYING EXISTING ELECTRICAL SYSTEM

SCALE: 1" = 50'

*APPROVED FOR ELECTRICAL WORK ONLY*

**E-10**

STATE OF CALIFORNIA - DEPARTMENT OF TRANSPORTATION
Caltrans® **ELECTRICAL DESIGN**

FUNCTIONAL SUPERVISOR: SHAHRAM SHAHRIARI
CALCULATED-DESIGNED BY: VANESSA TRUONG
CHECKED BY: SHAHRAM SHAHRIARI
REVISED BY
DATE REVISED

LAST REVISION 07-28-16
DATE PLOTTED => 30-AUG-2016
TIME PLOTTED => 14:23

| Dist | COUNTY | ROUTE | POST MILES TOTAL PROJECT | SHEET No. | TOTAL SHEETS |
|---|---|---|---|---|---|
| 12 | Ora | 55, 57, 91 | 17.5/17.9; 15.2/16.0 5.8/6.8; 8.7/R9.5 | 74 | 95 |

Vanessa Van Truong 07-26-16
REGISTERED ELECTRICAL ENGINEER DATE

07-25-16
PLANS APPROVAL DATE

REGISTERED PROFESSIONAL ENGINEER V.V. TRUONG No. E 13983 Exp 6/30/18 ELECTRICAL STATE OF CALIFORNIA

*THE STATE OF CALIFORNIA OR ITS OFFICERS OR AGENTS SHALL NOT BE RESPONSIBLE FOR THE ACCURACY OR COMPLETENESS OF SCANNED COPIES OF THIS PLAN SHEET.*

## NOTES:

1. FOR ACCURATE RIGHT OF WAY DATA, CONTACT RIGHT OF WAY ENGINEERING AT THE DISTRICT OFFICE.
2. MINIMUM 30′ CLEARANCE IS REQUIRED FROM THE FACE OF FIXED OBJECTS TO ETW.
3. INSTALL 90° SHIELD FOR LOCATION 8 AND LOCATION 9 HIGH MAST POLES FOR RESIDENTIAL AREAS.
4. SEE SHEET E-16 FOR WIRING DIAGRAM.
5. INSTALL 2"C, 2#6, 1#8 (G), UNLESS OTHERWISE NOTED.
6. PROTECT IN PLACE EXISTING FIBER OPTIC CONDUITS AND CABLES. SEE UTILITY PLANS.

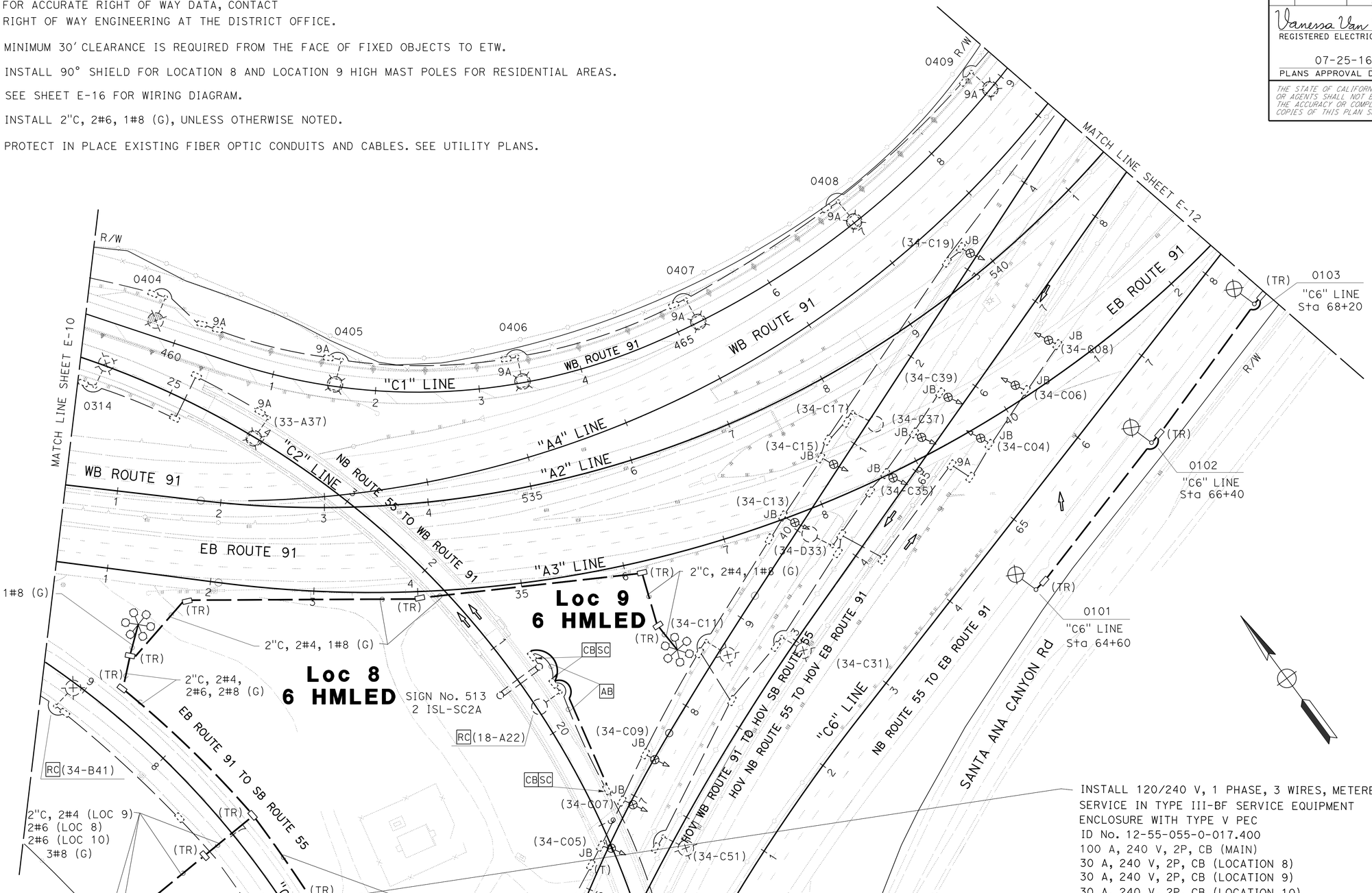


INSTALL 120/240 V, 1 PHASE, 3 WIRES, METERED SERVICE IN TYPE III-BF SERVICE EQUIPMENT ENCLOSURE WITH TYPE V PEC
ID No. 12-55-055-0-017.400
100 A, 240 V, 2P, CB (MAIN)
30 A, 240 V, 2P, CB (LOCATION 8)
30 A, 240 V, 2P, CB (LOCATION 9)
30 A, 240 V, 2P, CB (LOCATION 10)
15 A, 120 V, 1P, CB (PEC)

FOR LEGEND AND ABBREVIATION, SEE SHEET E-1

*APPROVED FOR ELECTRICAL WORK ONLY*

# MODIFYING EXISTING ELECTRICAL SYSTEM

SCALE: 1" = 50′

**E-11**

STATE OF CALIFORNIA - DEPARTMENT OF TRANSPORTATION
Caltrans® ELECTRICAL DESIGN

FUNCTIONAL SUPERVISOR: SHAHRAM SHAHRIARI
CALCULATED-DESIGNED BY: VANESSA TRUONG
CHECKED BY: SHAHRAM SHAHRIARI
REVISED BY
DATE REVISED

LAST REVISION DATE PLOTTED => 30-AUG-2016
07-28-16 TIME PLOTTED => 14:23

| Dist | COUNTY | ROUTE | POST MILES TOTAL PROJECT | SHEET No. | TOTAL SHEETS |
|---|---|---|---|---|---|
| 12 | Ora | 55, 57, 91 | 17.5/17.9; 15.2/16.0 5.8/6.8; 8.7/R9.5 | 75 | 95 |

Vanessa Van Truong 07-26-16
REGISTERED ELECTRICAL ENGINEER DATE

07-25-16
PLANS APPROVAL DATE

REGISTERED PROFESSIONAL ENGINEER V.V. TRUONG No. E 13983 Exp 6/30/18 ELECTRICAL STATE OF CALIFORNIA

*THE STATE OF CALIFORNIA OR ITS OFFICERS OR AGENTS SHALL NOT BE RESPONSIBLE FOR THE ACCURACY OR COMPLETENESS OF SCANNED COPIES OF THIS PLAN SHEET.*

## NOTES:

1. FOR ACCURATE RIGHT OF WAY DATA, CONTACT RIGHT OF WAY ENGINEERING AT THE DISTRICT OFFICE.
2. MINIMUM 4′ CLEARANCE IS REQUIRED FROM THE FACE OF FIXED OBJECT TO THE FACE OF MGS RAILING.
3. SEE SHEET E-16 FOR WIRING DIAGRAM.
4. INSTALL 2"C, 2#6, 1#8 (G), UNLESS OTHERWISE NOTED.
5. PROTECT IN PLACE EXISTING FIBER OPTIC CONDUITS AND CABLES. SEE UTILITY PLANS.

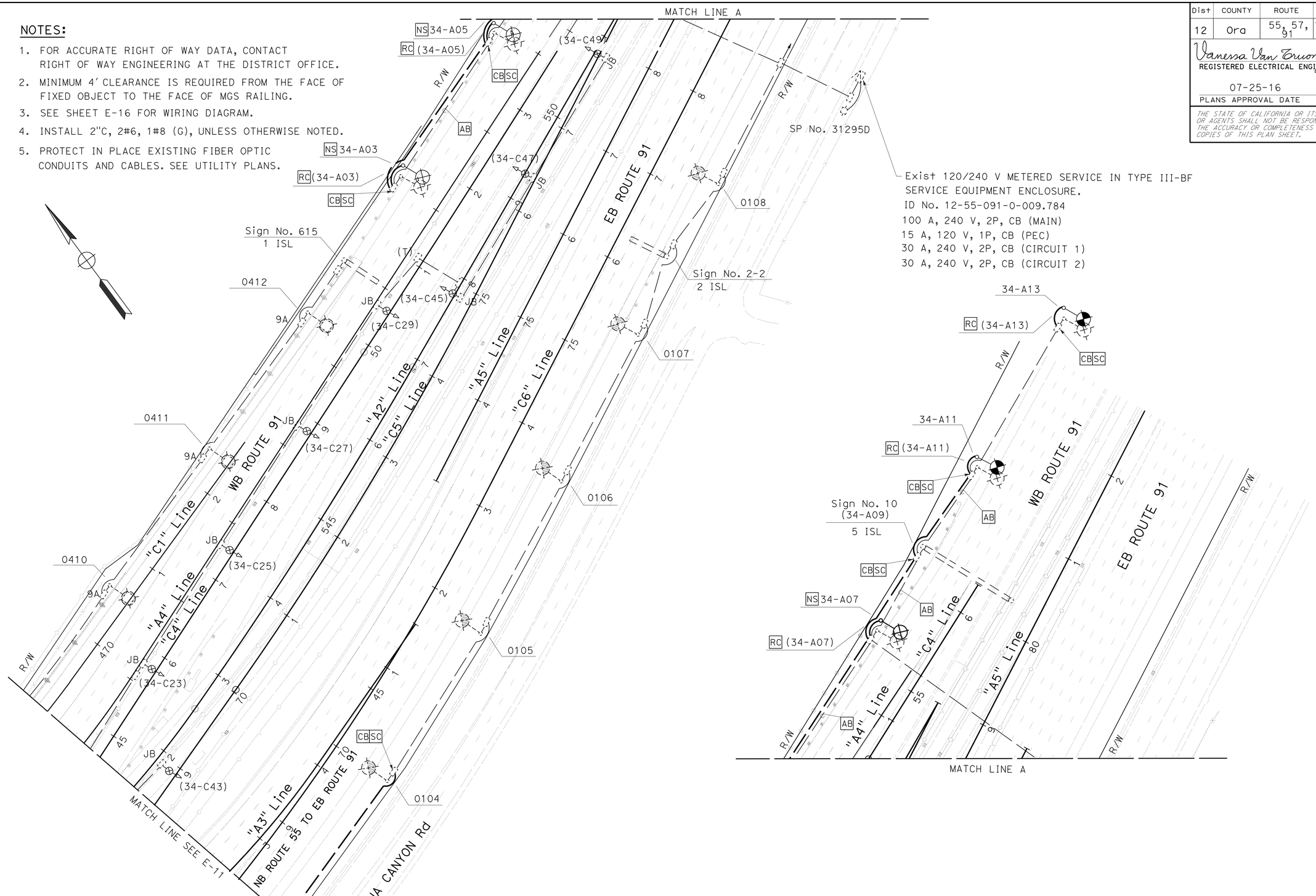


# MODIFYING EXISTING ELECTRICAL SYSTEM

SCALE: 1" = 50′

**E-12**

*APPROVED FOR ELECTRICAL WORK ONLY*

STATE OF CALIFORNIA - DEPARTMENT OF TRANSPORTATION
Caltrans
ELECTRICAL DESIGN

FUNCTIONAL SUPERVISOR: SHAHRAM SHAHRIARI
CALCULATED-DESIGNED BY: VANESSA TRUONG
CHECKED BY: SHAHRAM SHAHRIARI
REVISED BY
DATE REVISED

LAST REVISION 07-28-16 | DATE PLOTTED => 30-AUG-2016 | TIME PLOTTED => 14:23

| Dist | COUNTY | ROUTE | POST MILES TOTAL PROJECT | SHEET No. | TOTAL SHEETS |
|---|---|---|---|---|---|
| 12 | Ora | 55, 57, 91 | 17.5/17.9; 15.2/16.0 5.8/6.8; 8.7/R9.5 | 76 | 95 |

Vanessa Van Truong 07-26-16
REGISTERED ELECTRICAL ENGINEER DATE

07-25-16
PLANS APPROVAL DATE

REGISTERED PROFESSIONAL ENGINEER V.V. TRUONG No. E 13983 Exp. 6/30/18 ELECTRICAL STATE OF CALIFORNIA

*THE STATE OF CALIFORNIA OR ITS OFFICERS OR AGENTS SHALL NOT BE RESPONSIBLE FOR THE ACCURACY OR COMPLETENESS OF SCANNED COPIES OF THIS PLAN SHEET.*

## NOTES:

1. FOR ACCURATE RIGHT OF WAY DATA, CONTACT RIGHT OF WAY ENGINEERING AT THE DISTRICT OFFICE.
2. SEE SHEET E-16 FOR WIRING DIAGRAM.

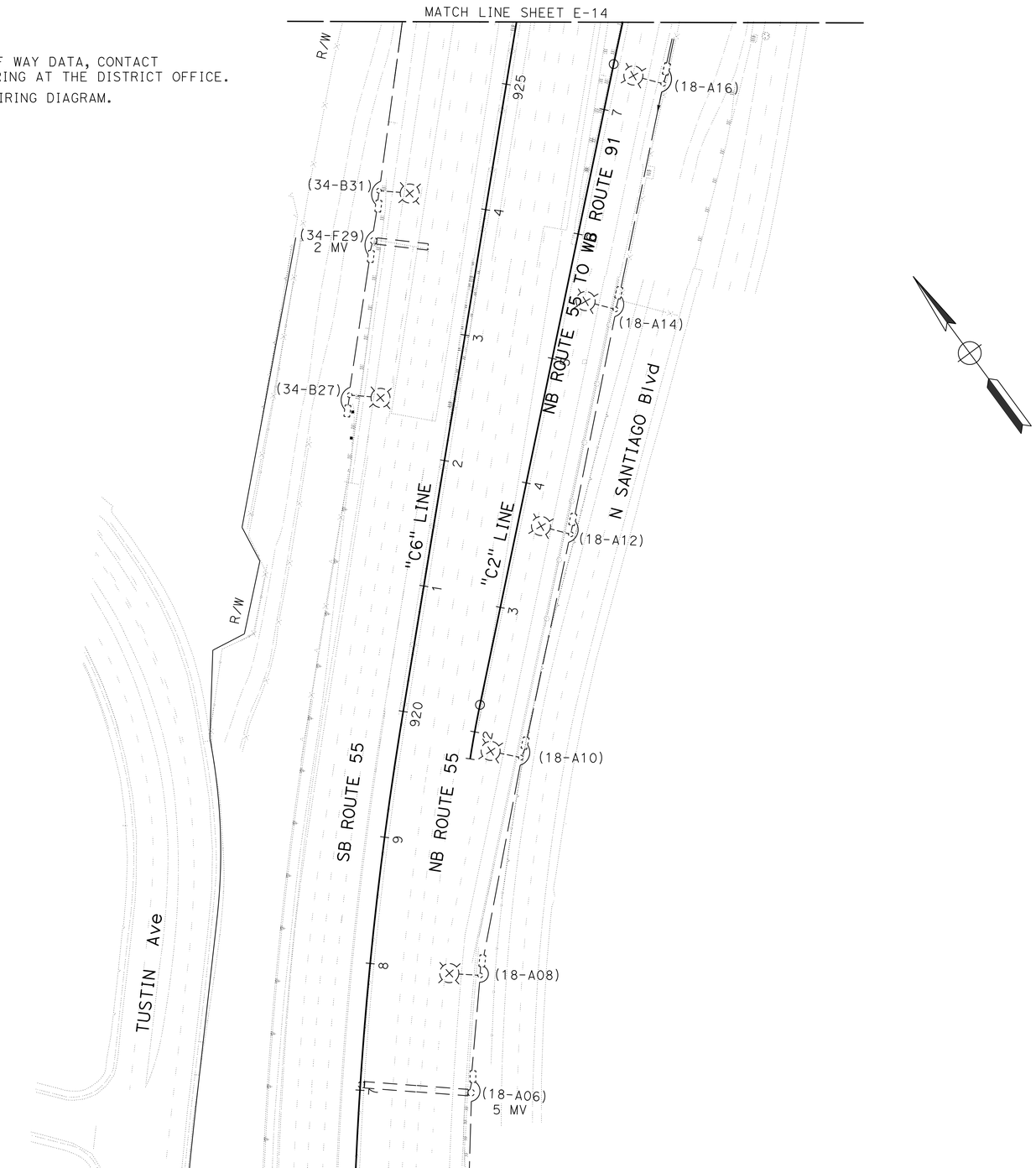


# MODIFYING EXISTING ELECTRICAL SYSTEM

SCALE: 1" = 50'

*APPROVED FOR ELECTRICAL WORK ONLY*

**E-13**

STATE OF CALIFORNIA - DEPARTMENT OF TRANSPORTATION
Caltrans® **ELECTRICAL DESIGN**

FUNCTIONAL SUPERVISOR: SHAHRAM SHAHRIARI
CALCULATED-DESIGNED BY: VANESSA TRUONG
CHECKED BY: SHAHRAM SHAHRIARI
REVISED BY
DATE REVISED

LAST REVISION 07-28-16
DATE PLOTTED => 30-AUG-2016
TIME PLOTTED => 14:23

| Dist | COUNTY | ROUTE | POST MILES TOTAL PROJECT | SHEET No. | TOTAL SHEETS |
|---|---|---|---|---|---|
| 12 | Ora | 55, 57, 91 | 17.5/17.9; 15.2/16.0 5.8/6.8; 8.7/R9.5 | 77 | 95 |

Vanessa Van Truong 07-26-16
REGISTERED ELECTRICAL ENGINEER DATE

07-25-16
PLANS APPROVAL DATE

REGISTERED PROFESSIONAL ENGINEER V.V. TRUONG No. E 13983 Exp. 6/30/18 ELECTRICAL STATE OF CALIFORNIA

*THE STATE OF CALIFORNIA OR ITS OFFICERS OR AGENTS SHALL NOT BE RESPONSIBLE FOR THE ACCURACY OR COMPLETENESS OF SCANNED COPIES OF THIS PLAN SHEET.*

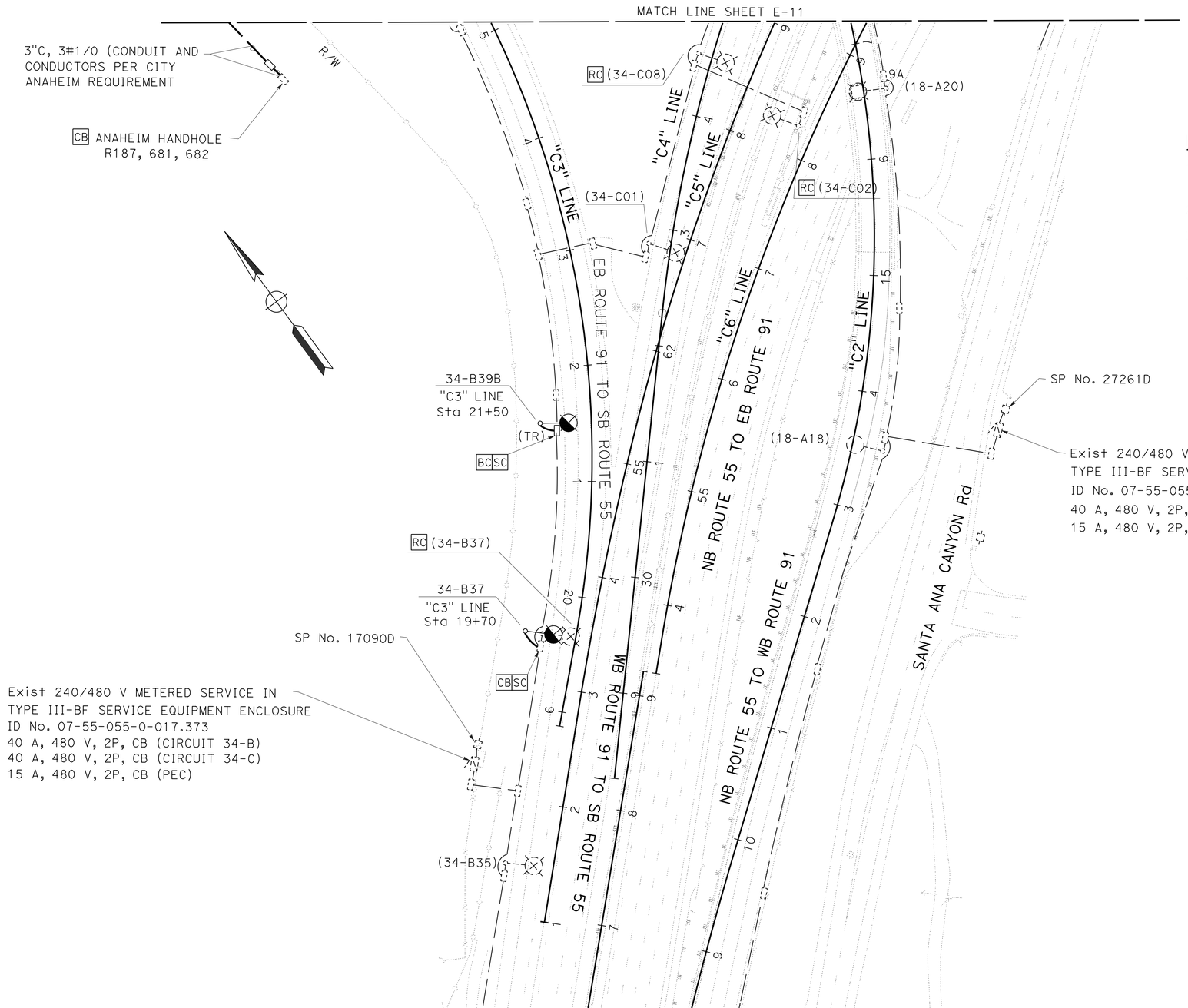


## NOTES:

1. FOR ACCURATE RIGHT OF WAY DATA, CONTACT RIGHT OF WAY ENGINEERING AT THE DISTRICT OFFICE.
2. SEE SHEET E-16 FOR WIRING DIAGRAM.
3. MINIMUM 30' CLEARANCE IS REQUIRED FROM THE FACE OF FIXED OBJECT TO ETW.
4. PROTECT IN PLACE EXISTING FIBER OPTIC CONDUITS AND CABLES. SEE UTILITY PLANS.

FOR LEGEND AND ABBREVIATION, SEE SHEET E-1

*APPROVED FOR ELECTRICAL WORK ONLY*

# MODIFYING EXISTING ELECTRICAL SYSTEM

SCALE: 1" = 50'

**E-14**

STATE OF CALIFORNIA - DEPARTMENT OF TRANSPORTATION
Caltrans® ELECTRICAL DESIGN

FUNCTIONAL SUPERVISOR: SHAHRAM SHAHRIARI
CALCULATED-DESIGNED BY: VANESSA TRUONG
CHECKED BY: SHAHRAM SHAHRIARI
REVISED BY / DATE REVISED

LAST REVISION 07-28-16 | DATE PLOTTED => 30-AUG-2016 | TIME PLOTTED => 14:23

| Dist | COUNTY | ROUTE | POST MILES TOTAL PROJECT | SHEET No. | TOTAL SHEETS |
|---|---|---|---|---|---|
| 12 | Ora | 55, 57, 91 | 17.5/17.9; 15.2/16.0 5.8/6.8; 8.7/R9.5 | 78 | 95 |

Vanessa Van Truong 07-26-16
REGISTERED ELECTRICAL ENGINEER DATE

07-25-16
PLANS APPROVAL DATE

V.V. TRUONG No. E 13983 Exp 6/30/18 ELECTRICAL — REGISTERED PROFESSIONAL ENGINEER — STATE OF CALIFORNIA

*THE STATE OF CALIFORNIA OR ITS OFFICERS OR AGENTS SHALL NOT BE RESPONSIBLE FOR THE ACCURACY OR COMPLETENESS OF SCANNED COPIES OF THIS PLAN SHEET.*

## LEGEND (THIS SHEET)

- RC EXISTING LAMP
- EXISTING SOFFIT LIGHT
- EXISTING LAMP
- EXISTING SIGN
- EXISTING CONDUCTOR
- NEW LED LUMINAIRE 235 W
- NEW HIGHMAST WITH 6 LUMINAIRES, EACH WITH 9 LED MODULES (2256 W)
- NEW HIGHMAST WITH 8 LUMINAIRES, EACH WITH 9 LED MODULES (3008 W)
- NEW 2#6 AWG, 1#8 (G) UNLESS OTHERWISE NOTED
- SPLICE
- RC EXISTING CONDUCTORS

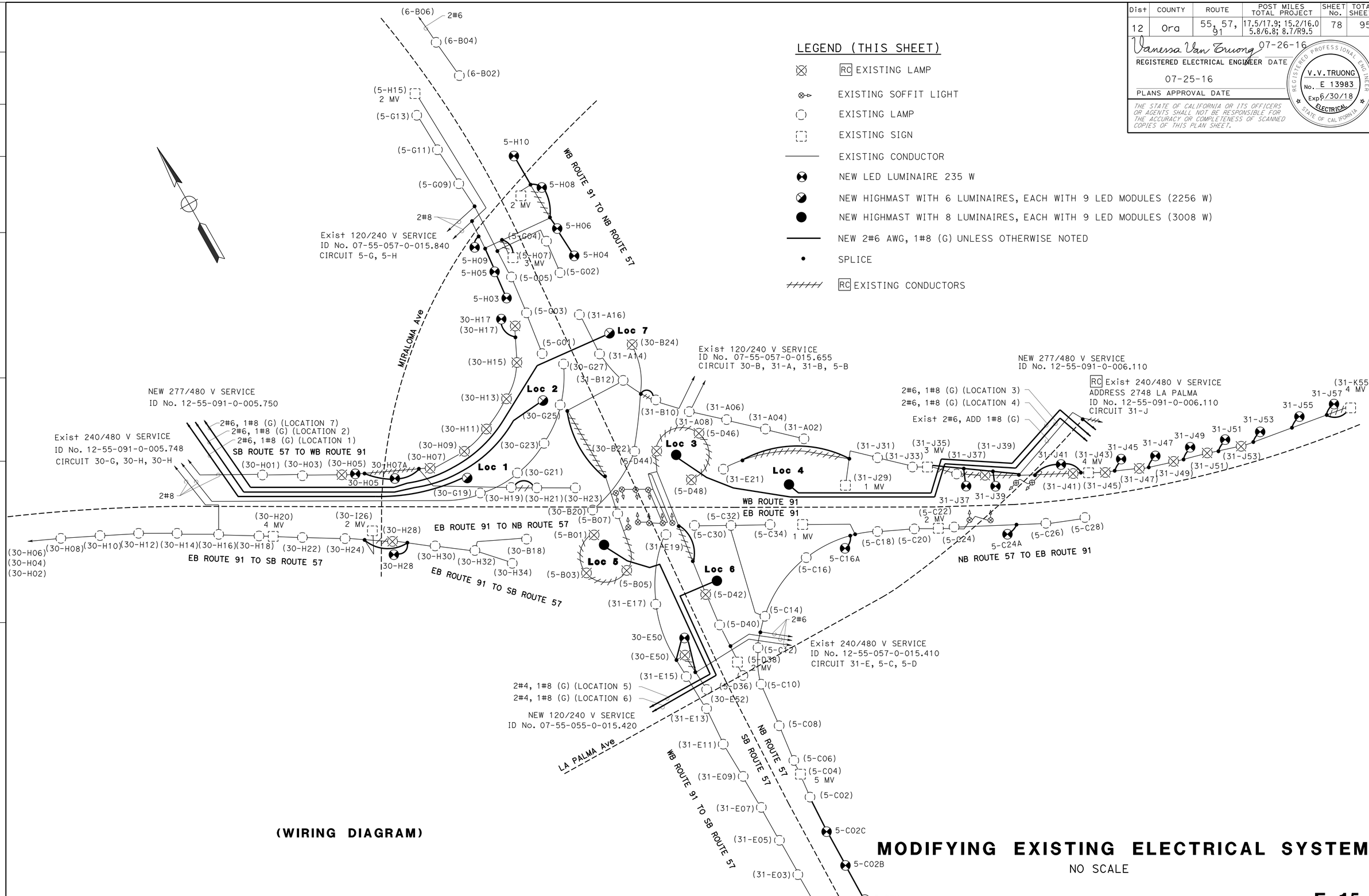


**(WIRING DIAGRAM)**

# MODIFYING EXISTING ELECTRICAL SYSTEM

NO SCALE

**E-15**

STATE OF CALIFORNIA - DEPARTMENT OF TRANSPORTATION
Caltrans®
**ELECTRICAL DESIGN**

FUNCTIONAL SUPERVISOR: SHAHRAM SHAHRIARI
CALCULATED-DESIGNED BY: VANESSA TRUONG
CHECKED BY: SHAHRAM SHAHRIARI
REVISED BY
DATE REVISED

LAST REVISION 07-28-16
DATE PLOTTED => 30-AUG-2016
TIME PLOTTED => 14:23

| Dist | COUNTY | ROUTE | POST MILES TOTAL PROJECT | SHEET No. | TOTAL SHEETS |
|---|---|---|---|---|---|
| 12 | Ora | 55, 57, 91 | 17.5/17.9; 15.2/16.0 5.8/6.8; 8.7/R9.5 | 79 | 95 |

Vanessa Van Truong 07-26-16
REGISTERED ELECTRICAL ENGINEER DATE

07-25-16
PLANS APPROVAL DATE

REGISTERED PROFESSIONAL ENGINEER V.V. TRUONG No. E 13983 Exp 6/30/18 ELECTRICAL STATE OF CALIFORNIA

*THE STATE OF CALIFORNIA OR ITS OFFICERS OR AGENTS SHALL NOT BE RESPONSIBLE FOR THE ACCURACY OR COMPLETENESS OF SCANNED COPIES OF THIS PLAN SHEET.*

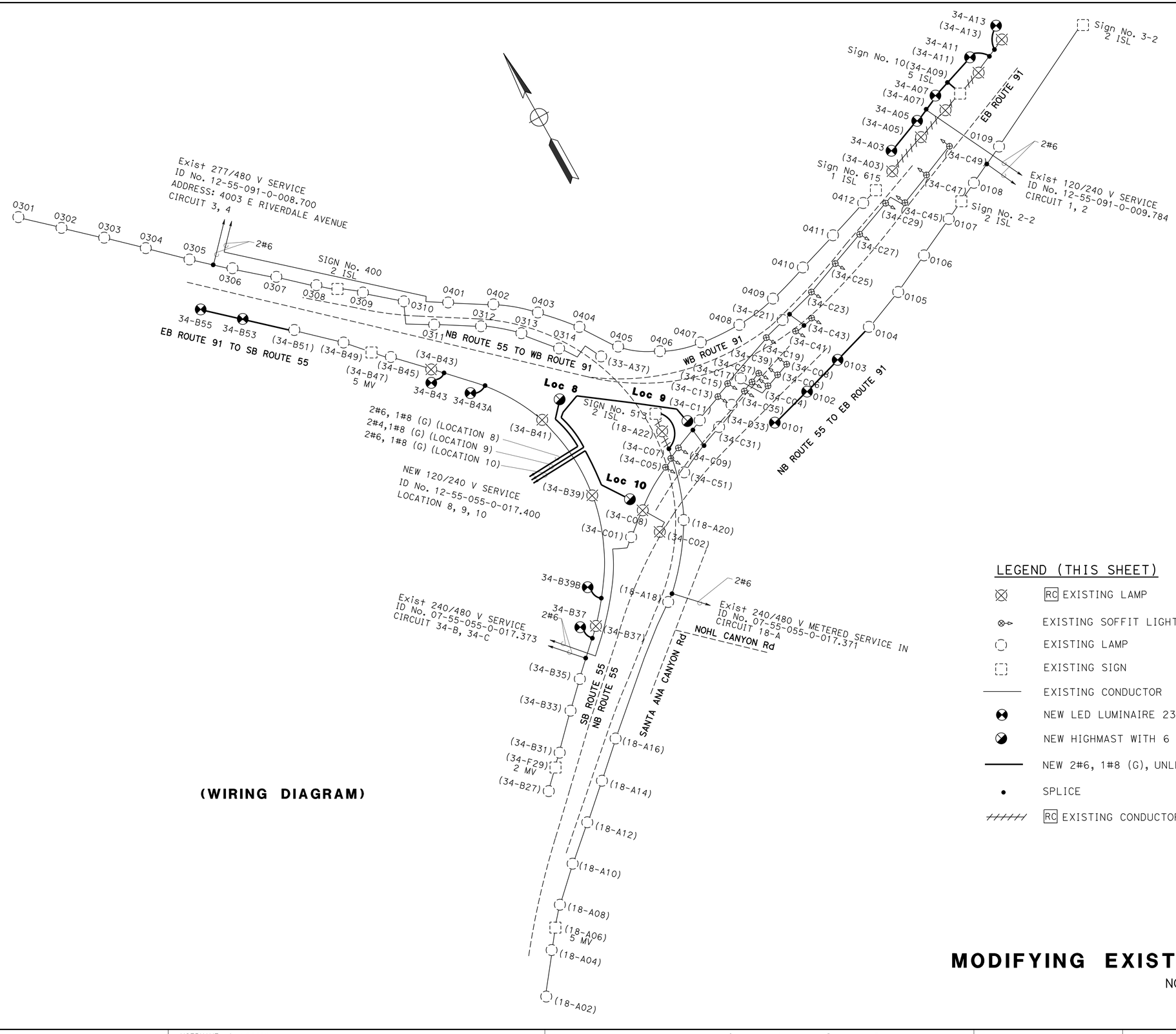


**(WIRING DIAGRAM)**

## LEGEND (THIS SHEET)

- RC EXISTING LAMP
- EXISTING SOFFIT LIGHT
- EXISTING LAMP
- EXISTING SIGN
- EXISTING CONDUCTOR
- NEW LED LUMINAIRE 235 W
- NEW HIGHMAST WITH 6 LUMINAIRES, EACH WITH 9 LED MODULES (2256 W)
- NEW 2#6, 1#8 (G), UNLESS OTHERWISE NOTED
- SPLICE
- RC EXISTING CONDUCTORS

# MODIFYING EXISTING ELECTRICAL SYSTEM

NO SCALE

**E-16**

STATE OF CALIFORNIA - DEPARTMENT OF TRANSPORTATION
Caltrans®
**ELECTRICAL DESIGN**

FUNCTIONAL SUPERVISOR: SHAHRAM SHAHRIARI
CALCULATED-DESIGNED BY: VANESSA TRUONG
CHECKED BY: SHAHRAM SHAHRIARI
REVISED BY
DATE REVISED

LAST REVISION 07-28-16
DATE PLOTTED => 30-AUG-2016
TIME PLOTTED => 14:23

| Dist | COUNTY | ROUTE | POST MILES TOTAL PROJECT | SHEET No. | TOTAL SHEETS |
|---|---|---|---|---|---|
| 12 | Ora | 55, 57, 91 | 17.5/17.9; 15.2/16.0 5.8/6.8; 8.7/R9.5 | 80 | 95 |

Vanessa Van Truong 07-26-16
REGISTERED ELECTRICAL ENGINEER DATE

07-25-16
PLANS APPROVAL DATE

REGISTERED PROFESSIONAL ENGINEER V.V. TRUONG No. E 13983 Exp 6/30/18 ELECTRICAL STATE OF CALIFORNIA

*THE STATE OF CALIFORNIA OR ITS OFFICERS OR AGENTS SHALL NOT BE RESPONSIBLE FOR THE ACCURACY OR COMPLETENESS OF SCANNED COPIES OF THIS PLAN SHEET.*

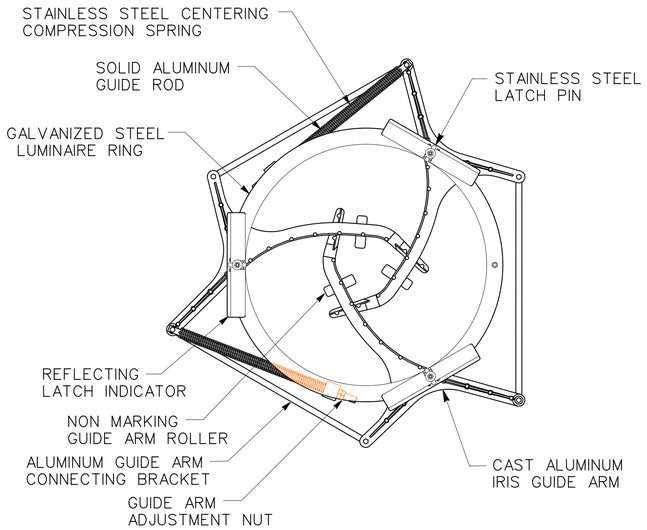


RING ASSEMBLY

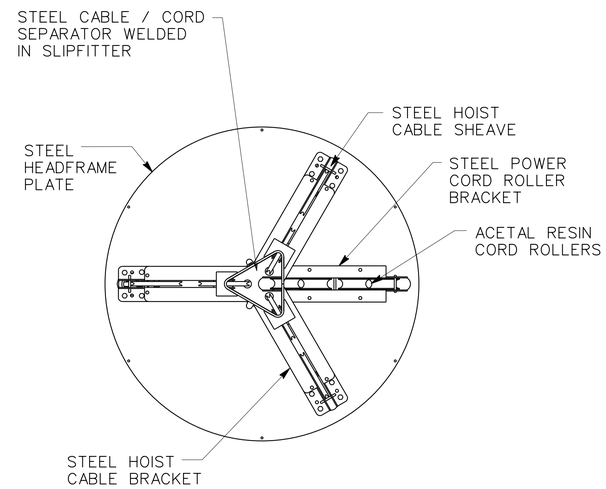


HEADFRAME ASSEMBLY

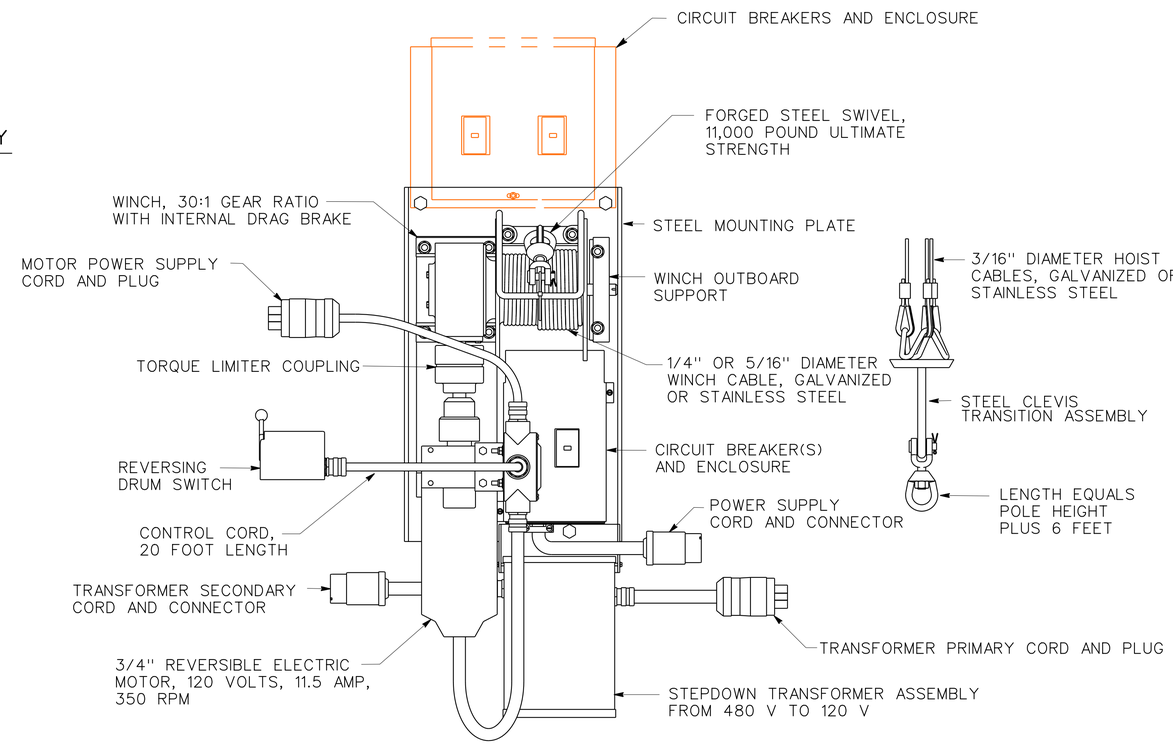


WINCH PLATE AND DRIVE MOTOR ASSEMBLY

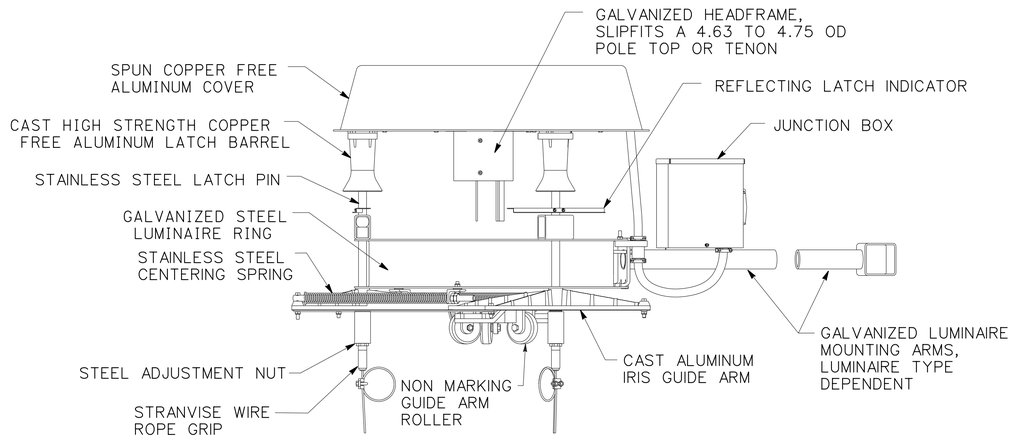


EPA = 5.62 SQUARE FEET
WEIGHT = 250 POUNDS
DIAMETER OF ASSEMBLY WITH LUMINAIRES VARIES FROM 8 TO 11 FEET

HEADFRAME AND RING ASSEMBLY

# MODIFYING EXISTING ELECTRICAL SYSTEM

NO SCALE

**E-17**

*APPROVED FOR ELECTRICAL WORK ONLY*

STATE OF CALIFORNIA - DEPARTMENT OF TRANSPORTATION
Caltrans®
ELECTRICAL DESIGN

FUNCTIONAL SUPERVISOR: SHAHRAM SHAHRIARI
CALCULATED-DESIGNED BY: VANESSA TRUONG
CHECKED BY: SHAHRAM SHAHRIARI
REVISED BY
DATE REVISED

LAST REVISION 07-14-16
DATE PLOTTED => 30-AUG-2016
TIME PLOTTED => 14:23

| Dist | COUNTY | ROUTE | POST MILES TOTAL PROJECT | SHEET No. | TOTAL SHEETS |
|---|---|---|---|---|---|
| 12 | Ora | 55, 57, 91 | 17.5/17.9; 15.2/16.0 5.8/6.8; 8.7/R9.5 | 81 | 95 |

Vanessa Van Truong 07-26-16
REGISTERED ELECTRICAL ENGINEER DATE

07-25-16
PLANS APPROVAL DATE

REGISTERED PROFESSIONAL ENGINEER V.V. TRUONG No. E 13983 Exp 6/30/18 ELECTRICAL STATE OF CALIFORNIA

*THE STATE OF CALIFORNIA OR ITS OFFICERS OR AGENTS SHALL NOT BE RESPONSIBLE FOR THE ACCURACY OR COMPLETENESS OF SCANNED COPIES OF THIS PLAN SHEET.*

NOTE:

1. ELECTRICAL QUANTITY INFORMATION ON THIS SHEET IS FOR DESIGNER USE ONLY. DO NOT USE FOR BIDDING PURPOSES.

# MODIFYING EXISTING ELECTRICAL SYSTEM

| SHEET No. | HIGH MAST WITH 6 LUMINAIRES EACH WITH 9 LED MODULES | HIGH MAST WITH 8 LUMINAIRES EACH WITH 9 LED MODULES | LOWERING DEVICE | TYPE 30 | TYPE 31 | TYPE 32 | LED LUM 235 W | 3"C | 2"C | #1/0 AWG | #4 AWG | #6 AWG | #8 AWG | No. 5 PULL BOX | No. 5(TR) PULL BOX | SERVICE CABINET | TYPE H RISER | RC TYPE 30 | RC PULL BOX |
|---|---|---|---|---|---|---|---|---|---|---|---|---|---|---|---|---|---|---|---|
| | EA | EA | EA | EA | EA | EA | EA | LF | LF | LF | LF | LF | LF | EA | EA | EA | EA | EA | EA |
| E-2 | | | | 3 | | | 3 | 30 | 1800 | 120 | | 8000 | 4500 | | 10 | 1 | | 4 | 1 |
| E-3 | 2 | 4 | 6 | | | | | | 2800 | | 1800 | 7000 | 4500 | | 17 | | | 9 | 9 |
| E-4 | | | | 3 | 2 | | 5 | 20 | 2300 | 80 | | 8000 | 4000 | | 14 | 1 | 1 | 3 | 2 |
| E-5 | | | | | | 7 | 7 | | 310 | | | 620 | 310 | | 7 | | | 5 | |
| E-6 | | | | | 3 | | 3 | | 600 | | | 1200 | 600 | | 3 | | | | |
| E-7 | | | | 1 | | | 1 | 50 | 850 | 150 | 2600 | 250 | 1500 | 2 | 7 | 1 | 1 | 1 | 1 |
| E-8 | 1 | | 1 | 6 | | 1 | 7 | | 1500 | | | 2900 | 1500 | | 8 | | | 3 | 2 |
| E-9 | | | | 1 | | | 1 | | 170 | | | 340 | 170 | | 1 | | | | |
| E-10 | | | | | 2 | 2 | 4 | | 500 | | | 1000 | 500 | | 4 | | | 1 | |
| E-11 | 3 | | 3 | 3 | | | 3 | 100 | 2400 | 300 | 2400 | 3500 | 3000 | 3 | 15 | 1 | | 3 | |
| E-12 | | | | 3 | 2 | | 5 | | 800 | | | 1600 | 800 | | | | | 5 | |
| E-14 | | | | | | 2 | 2 | 100 | 60 | 300 | | 120 | 60 | 1 | 1 | | | 3 | |

## ELECTRICAL QUANTITIES

NO SCALE

E-18

STATE OF CALIFORNIA - DEPARTMENT OF TRANSPORTATION
Caltrans® ELECTRICAL DESIGN

VANESSA TRUONG | SHAHRAM SHAHRIARI | CALCULATED-DESIGNED BY | CHECKED BY | FUNCTIONAL SUPERVISOR | SHAHRAM SHAHRIARI | REVISED BY | DATE REVISED

LAST REVISION 07-28-16 | DATE PLOTTED => 30-AUG-2016 | TIME PLOTTED => 14:23

| Pole Type | Pole Data | | | Base Plate Data | | | | | CIDH Pile Data | |
|---|---|---|---|---|---|---|---|---|---|---|
| | Height "H" | Min OD Base | Min Thickness Base | Dia | Thick-ness | Anchor Bolts | | | "D" | "L" |
| | | | | | | Total | Size "d" | BOLT CIRCLE (BC) | | |
| HM 160 | 160'-0" | 2'-6" | 5/8" | 3'-6" | 3" | 12 | 2 1/2" | 3'-0" | 6'-0" | 20'-0" |

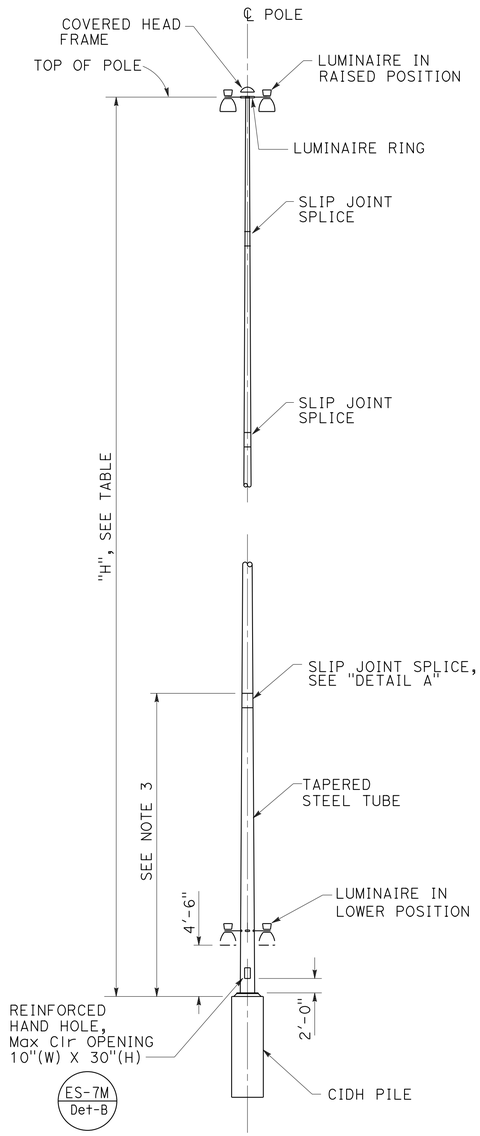


## POLE

ELEVATION A

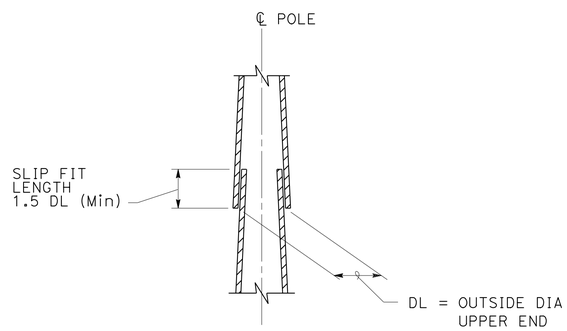


## SLIP JOINT SPLICE DETAIL

DETAIL A

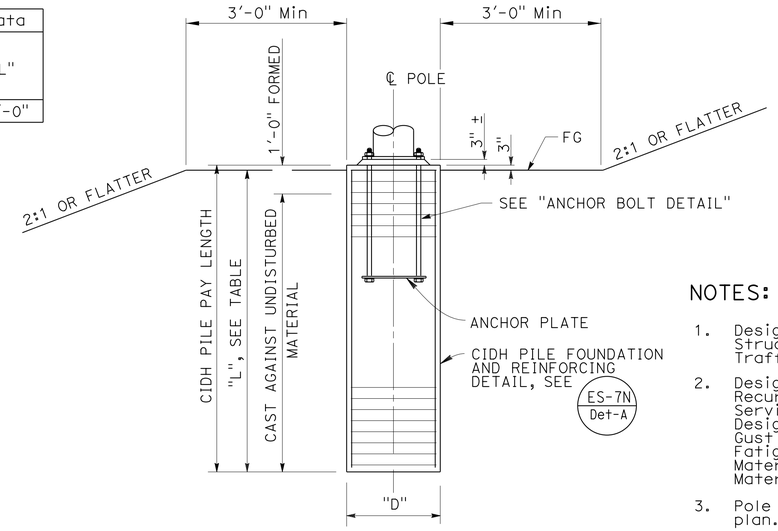


## TYPICAL LOCATION

ELEVATION B

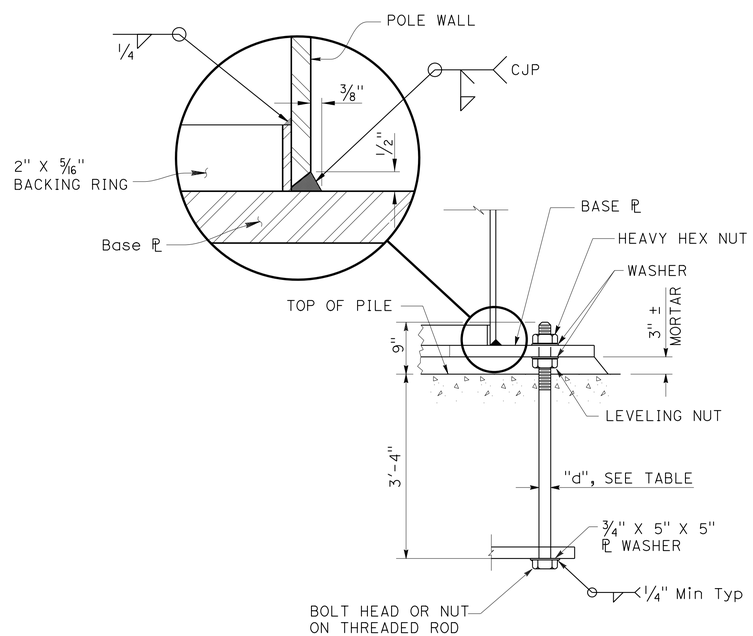


## ANCHOR BOLT DETAIL

DETAIL B

## NOTES:

1. Design conforms to 2013 AASHTO Standard Specifications for Structural Supports for Highway Signs, Luminaires and Traffic Signals, 6th Edition.
2. Design Criteria:
   Recurrence Interval = 50 Years
   Service Life = 50 Years
   Design Wind Speed = 100 mph (3-second gust speed)
   Gust Effect Factor = 1.14
   Fatigue Importance Category = I
   Materials (Steel Poles and hand hole): 55,000 Psi yield strength
   Materials (Steel Anchor bolts): 55,000 Psi yield strength
3. Pole details must suit the luminaire lowering device and the foundation plan. Pole details must be submitted to the Engineer for approval.
4. Pole must be multi sided polygon or round and tapered at a rate of 0.14 inch per foot.
5. Total number of luminaires for each pole is up to eight(8). The weight of each luminaire must not exceed 52 pounds with maximum effective projected area of 1.3 square feet. The weight of luminaire lowering device must not exceed 750 pounds with maximum effective projected area of 5 square feet.
6. Base plate shape is optional.
7. Central hole in base plate must not exceed 12 inches or half of the base pole diameter, whichever is less.
8. For center void and drain holes in pole base mortar, see ES-6B Detail N.
9. Hand hole opening must be located on the downstream side of traffic unless otherwise determined by the Engineer.
10. The following soil parameters were used for the pole foundation design:
    $\phi$ = 30°
    $\gamma$ = 110 pcf
    c = 0 psf

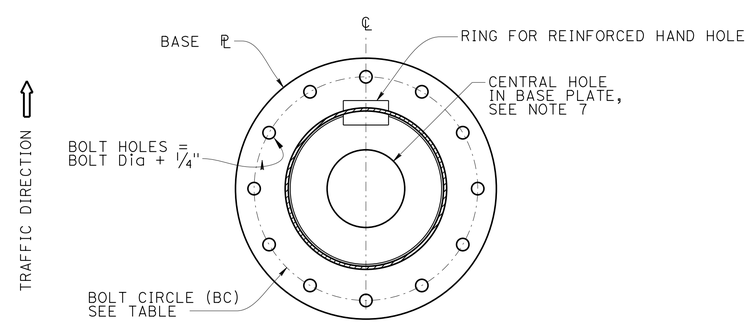


## BASE PLATE DETAIL

DETAIL C

NO SCALE

THE CONTRACTOR SHALL VERIFY ALL CONTROLLING FIELD DIMENSIONS BEFORE ORDERING OR FABRICATING ANY MATERIAL.

| DIST | COUNTY | ROUTE | POST MILES TOTAL PROJECT | SHEET No. | TOTAL SHEETS |
|---|---|---|---|---|---|
| 12 | ORA | 55,57,91 | VARIES | 82 | 95 |

REGISTERED CIVIL ENGINEER 6-14-16 DATE

07-25-16
PLANS APPROVAL DATE

REGISTERED PROFESSIONAL ENGINEER YU SONG No. C71687 Exp. 12/31/17 CIVIL STATE OF CALIFORNIA

*The State of California or its officers or agents shall not be responsible for the accuracy or completeness of electronic copies of this plan sheet.*

BRANCH CHIEF DAVID A. NEUMANN

| | BY | CHECKED |
|---|---|---|
| DESIGN | YU SONG | NIRANJEN KANEPATHIPILLAI |
| DETAILS | SHUMEI JIANG | YU SONG |
| QUANTITIES | X | X |

STATE OF CALIFORNIA DEPARTMENT OF TRANSPORTATION

DIVISION OF ENGINEERING SERVICES STRUCTURE DESIGN SPECIAL DESIGN BRANCH

BRIDGE No. N/A
POST MILE VARIES

# LIGHTING STANDARD, 160' HIGH MAST LIGHT POLE
# ELECTRICAL SYSTEMS

SES-1

STRUCTURES DESIGN SPECIAL DESIGN SHEET (ENGLISH) (REV. 09-01-10)

ORIGINAL SCALE IN INCHES FOR REDUCED PLANS 0 1 2 3

UNIT: 3619
PROJECT NUMBER & PHASE: 1212000121-1 CONTRACT NO.: 12-0M6101

DISREGARD PRINTS BEARING EARLIER REVISION DATES

REVISION DATES 10-04-15 12-15-15

SHEET 1 OF 1

FILE => 1212000121ua019-0m6101-u-sesdt01.dgn

USERNAME => s129866 DATE PLOTTED => 30-AUG-2016 TIME PLOTTED => 14:23

| Dist | COUNTY | ROUTE | POST MILES TOTAL PROJECT | SHEET No. | TOTAL SHEETS |
|---|---|---|---|---|---|
| 12 | Ora | 55, 57, 91 | 17.5/17.9;15.2/16.0 5.8/6.8;8.7/R9.5 | 83 | 95 |

REGISTERED CIVIL ENGINEER

January 15, 2016
PLANS APPROVAL DATE

REGISTERED PROFESSIONAL ENGINEER
Michael Janzen
No. 44788
Exp. 3-31-16
CIVIL
STATE OF CALIFORNIA

*THE STATE OF CALIFORNIA OR ITS OFFICERS OR AGENTS SHALL NOT BE RESPONSIBLE FOR THE ACCURACY OR COMPLETENESS OF SCANNED COPIES OF THIS PLAN SHEET.*

TO ACCOMPANY PLANS DATED 07-25-2016

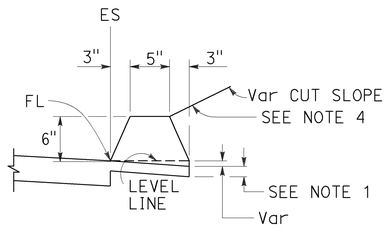


TYPE A
See Notes 3 and 5

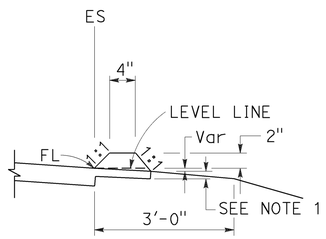


TYPE C

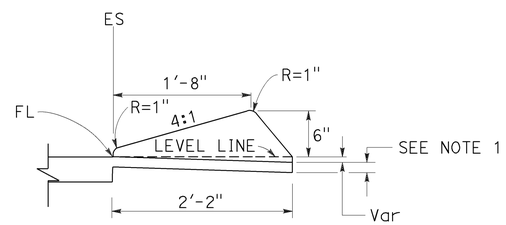


TYPE D

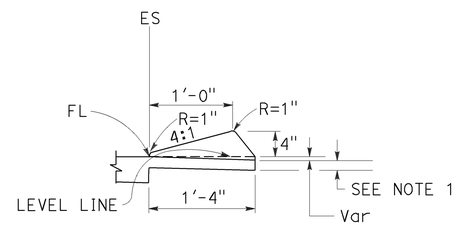


TYPE E

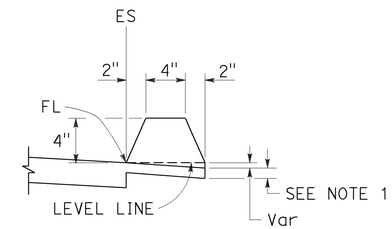


TYPE F
See Note 5

## DIKES

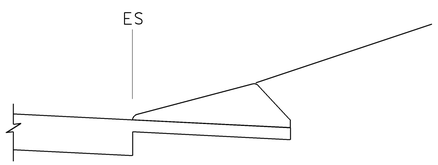


CASE C-1
Cut Slope

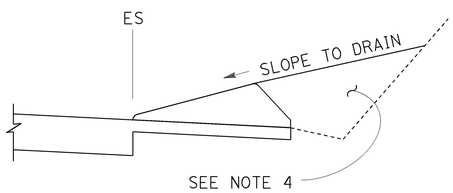


CASE C-2
Cut Slope

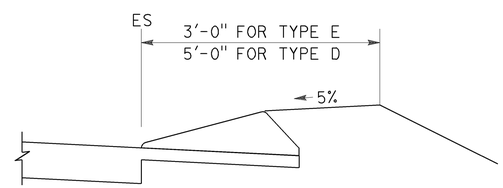


CASE F

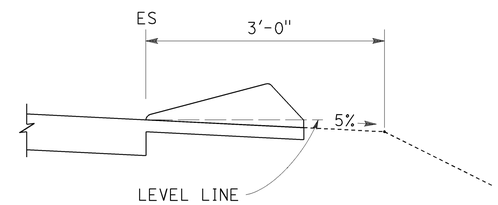


CASE R
See Note 2

## TYPE D AND E BACKFILL DETAILS

NOTES:

1. For HMA shoulders only, extend top layer of HMA placed on the shoulder under dike with no joint at the ES. For projects with OGFC shoulders, do not extend OGFC under dike. See project plans for modified dike detail.
2. Case R applies to retrofit only projects where restrictive conditions do not provide enough width for Case F backfill.
3. Type A dike only to be used where restrictive slope conditions do not provide enough width to use Type D or Type E dike.
4. Fill and compact with excavated material to top of dike.
5. Use Type A or F dike, where dike is required with guardrail installations. See Standard Plan A77N4 for dike positioning details. See Standard Plan A77N3 for hinge point offsets with guardrail.

DIKE QUANTITIES

| TYPE | CUBIC YARDS PER LINEAR FOOT |
|---|---|
| A | 0.0135 |
| C | 0.0038 |
| D | 0.0293 |
| E | 0.0130 |
| F | 0.0066 |

Quantities based on 5% cross slope.

STATE OF CALIFORNIA
DEPARTMENT OF TRANSPORTATION

# HOT MIX ASPHALT DIKES

NO SCALE

RSP A87B DATED JANUARY 15, 2016 SUPERSEDES STANDARD PLAN A87B DATED OCTOBER 30, 2015 - PAGE 126 OF THE STANDARD PLANS BOOK DATED 2015.

**REVISED STANDARD PLAN RSP A87B**

**2015 REVISED STANDARD PLAN RSP A87B**

11-17-15

| Dist | COUNTY | ROUTE | POST MILES TOTAL PROJECT | SHEET No. | TOTAL SHEETS |
|---|---|---|---|---|---|
| 12 | Ora | 55, 57, 91 | 17.5/17.9;15.2/16.0 5.8/6.8;8.7/R9.5 | 84 | 95 |

REGISTERED CIVIL ENGINEER

July 15, 2016

PLANS APPROVAL DATE

REGISTERED PROFESSIONAL ENGINEER Tillat Satter No. C42892 Exp. 3-31-18 CIVIL STATE OF CALIFORNIA

*THE STATE OF CALIFORNIA OR ITS OFFICERS OR AGENTS SHALL NOT BE RESPONSIBLE FOR THE ACCURACY OR COMPLETENESS OF SCANNED COPIES OF THIS PLAN SHEET.*

TO ACCOMPANY PLANS DATED 07-25-2016

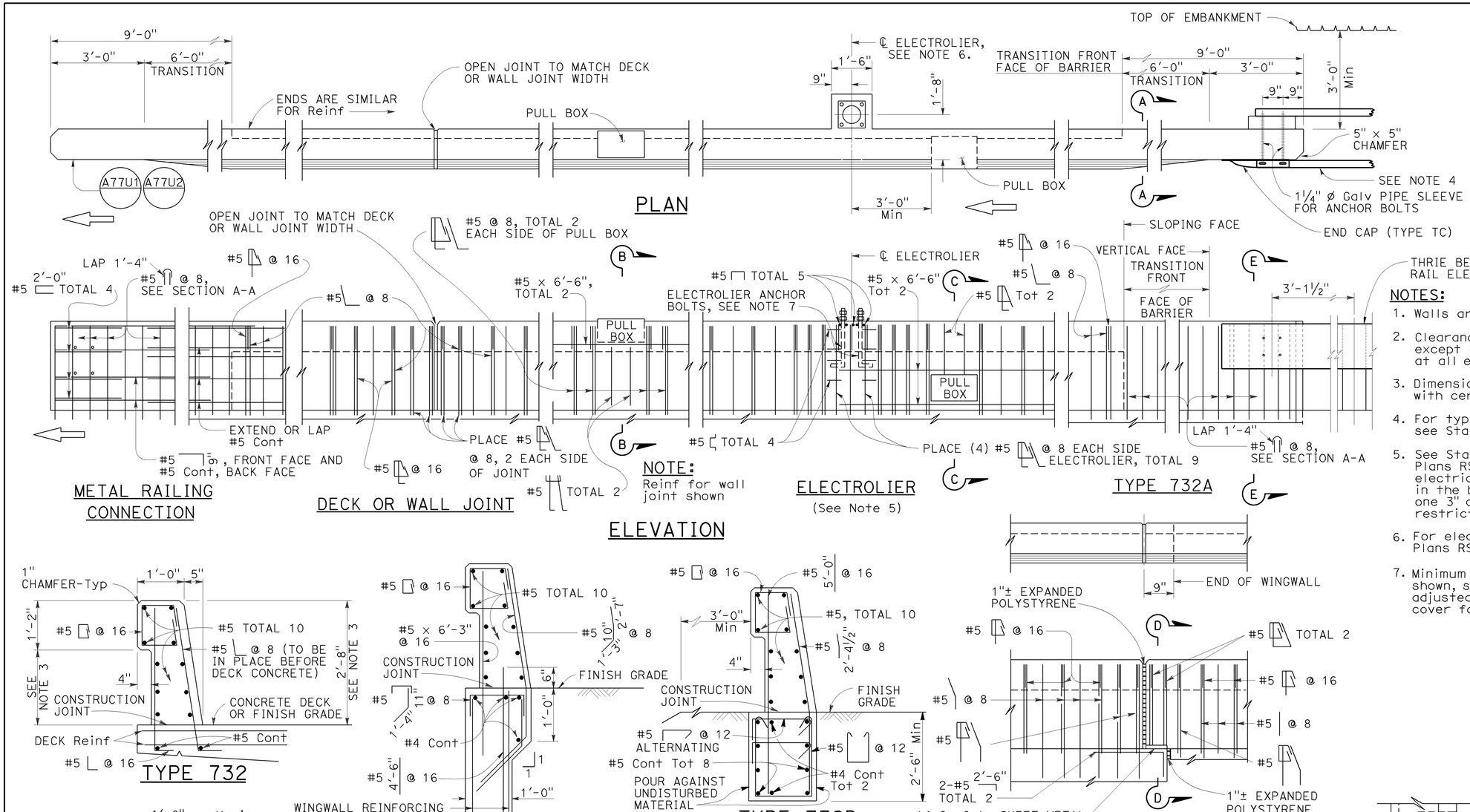


## NOTES:

1. Walls are to be backfilled before barrier is placed.
2. Clearance to reinforcing steel in barrier to be 1", except as noted. Longitudinal reinforcement to stop at all expansion joints.
3. Dimensions may vary with roadway cross slope and with certain thickness of surfacing. See Project Plans.
4. For typical metal railing connection details not shown, see Standard Plans A77U1 and A77U2.
5. See Standard Plans ES-9A, ES-9B, Revised Standard Plans RSP ES-9C, RSP ES-9D and RSP ES-9E for electrical details. The maximum number of conduits in the barrier is limited to two 2" conduits along with one 3" conduit. When a 3" conduit is used, it is restricted to the base of the barrier.
6. For electrolier mounting details, See Revised Standard Plans RSP ES-6A and RSP ES-6B.
7. Minimum concrete edge distance, to the reinforcing shown, shall be maintained. Edge distance may be adjusted to accommodate increase in concrete cover for architectual treatment.

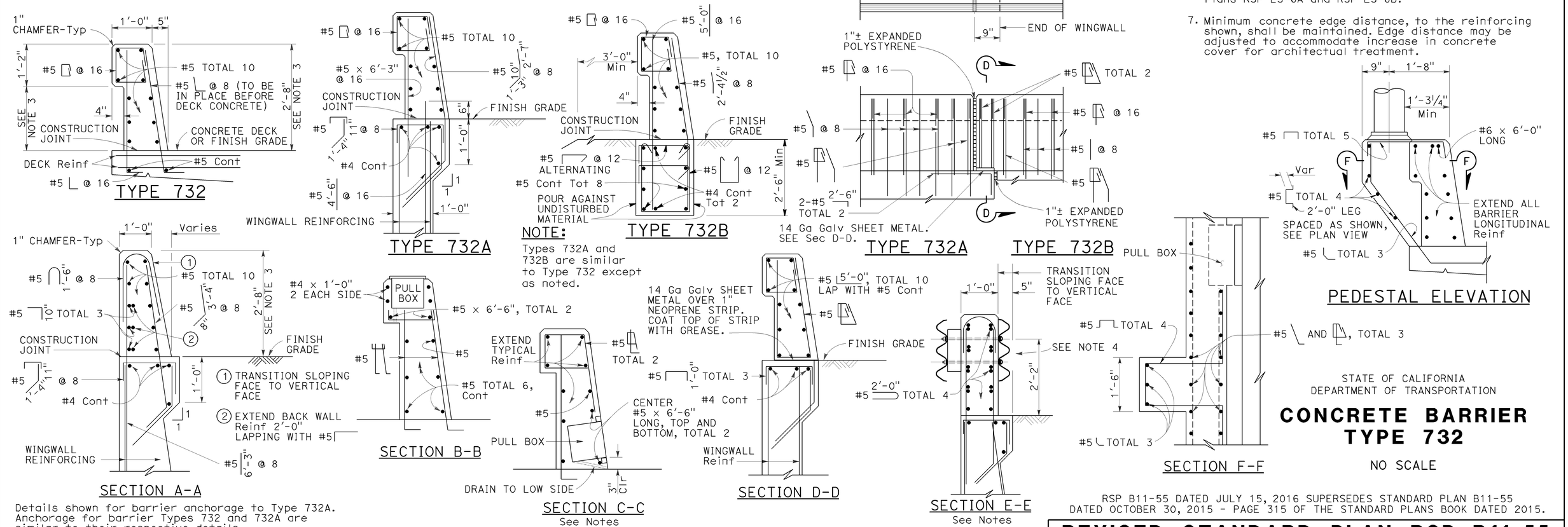


STATE OF CALIFORNIA
DEPARTMENT OF TRANSPORTATION

# CONCRETE BARRIER TYPE 732

NO SCALE

RSP B11-55 DATED JULY 15, 2016 SUPERSEDES STANDARD PLAN B11-55 DATED OCTOBER 30, 2015 - PAGE 315 OF THE STANDARD PLANS BOOK DATED 2015.

**REVISED STANDARD PLAN RSP B11-55**

**2015 REVISED STANDARD PLAN RSP B11-55**

6-28-16

| Dist | COUNTY | ROUTE | POST MILES TOTAL PROJECT | SHEET No. | TOTAL SHEETS |
|---|---|---|---|---|---|
| 12 | Ora | 55, 57, 91 | 17.5/17.9;15.2/16.0 5.8/6.8;8.7/R9.5 | 85 | 95 |

Theresa Gabriel
REGISTERED ELECTRICAL ENGINEER

April 15, 2016
PLANS APPROVAL DATE

REGISTERED PROFESSIONAL ENGINEER Theresa Aziz Gabriel No. E15129 Exp. 6-30-16 ELECTRICAL STATE OF CALIFORNIA

*THE STATE OF CALIFORNIA OR ITS OFFICERS OR AGENTS SHALL NOT BE RESPONSIBLE FOR THE ACCURACY OR COMPLETENESS OF SCANNED COPIES OF THIS PLAN SHEET.*

TO ACCOMPANY PLANS DATED 07-25-2016

# EQUIPMENT IDENTIFICATION

## ILLUMINATED SIGN IDENTIFICATION:

SIGN No. 12345
10 ISL SCI 1.0

- SIGN EQUIPMENT IDENTIFICATION CHARACTERS - PLACE ON POST OR STRUCTURE
- TRANSFORMER RATING (kVA)
- LIGHTING CONTROL TYPE
- NUMBER AND TYPE OF FIXTURES

} DO NOT PLACE ON STANDARD OR STRUCTURE

## ELECTROLIER OR EQUIPMENT IDENTIFICATION:

L2745 - 15'-0"

- MAST ARM LENGTH, IF SHOWN. DO NOT PLACE ON STANDARD OR STRUCTURE
- EQUIPMENT IDENTIFICATION CHARACTERS - PLACE ON STANDARD OR STRUCTURE. EXISTING EQUIPMENT IDENTIFICATION CHARACTERS ARE SHOWN IN PARENTHESIS

## CONDUIT AND CONDUCTOR IDENTIFICATION:

1½"C, 2#10, 15#14, 2 DLC, 12P#18 (PAIR)

- NUMBER AND SIZE OF CONDUCTORS AND CABLES
- SIZE OF CONDUIT IN INCHES

| | |
|---|---|
| ø1, ø2, ø2P, etc. | TRAFFIC PHASE IDENTIFICATION FOR SIGNALS, DETECTORS AND PHASE DIAGRAMS |
| 1 2 3 | LEGEND NUMBERS |
| A B C | EQUIPMENT, SIGNAL POLES, INSTALLATION OR ITEMS |
| 1 2 3 | CONDUIT RUN NUMBERS |

## SIGNAL AND LIGHTING STANDARD (TYPICAL DESIGNATION):

19A - 3 - 100

- WIND VELOCITY = 100 mph
- CASE 3 ARM LOADING
- STANDARD TYPE
- STANDARD PLAN SHEET NUMBER
- DETAIL, NUMBER, SECTION, TYPE OR ELEVATION

# MISCELLANEOUS EQUIPMENT

| NEW | EXISTING | |
|---|---|---|
| CMS | cms | CHANGEABLE MESSAGE SIGN |
| | | CLOSED CIRCUIT TELEVISION CAMERA |
| | | HIGHWAY ADVISORY RADIO POLE AND ANTENNA |
| EMS | ems | LED EXTINGUISHABLE MESSAGE SIGN |
| M V | m v | DETECTION DEVICE<br>M = MICROWAVE SENSOR<br>V = VIDEO IMAGE SENSOR |

# WIRING DIAGRAM LEGEND

- EXTERNAL CONDUCTOR
- CONDUCTOR OR BUS
- TIE POINT
- CONTACTOR COIL
- CONTACTOR, NO CONTACT
- TERMINAL BLOCKS
- CONTACTOR, NC CONTACT
- ENCLOSURE BOND
- GROUNDING ELECTRODE
- CIRCUIT BREAKER
- RECEPTACLE

# PULL BOXES

| NEW | EXISTING | |
|---|---|---|
| | | PULL BOX, No. 5 UNLESS OTHERWISE INDICATED OR NOTED |
| 3 | 9A(21) | PULL BOX, ADDITIONAL DESIGNATIONS OR DESCRIPTIONS |

3 No. 3½ PULL BOX
5 No. 5 PULL BOX
6 No. 6 PULL BOX
7 No. 7 PULL BOX (CEILING)
8 No. 8 PULL BOX
9 No. 9 PULL BOX (STRUCTURE)
9A No. 9A PULL BOX (STRUCTURE)

(C) COMMUNICATIONS PULL BOX
(E) PULL BOX WITH EXTENSION
(S) SPRINKLER CONTROL PULL BOX
(21) ANCHOR BOLTS AND CONDUIT FOR FUTURE INSTALLATION OF TYPE 21 STANDARD
(T) TRAFFIC PULL BOX

# VEHICLE DETECTORS

5 J 9 U

- VEHICLE DETECTOR DESIGNATION
- U = UPPER
  L = LOWER
- SLOT NUMBER IN INPUT FILE
- INPUT FILE (I OR J)
- PHASE

| NEW | EXISTING | |
|---|---|---|
| | | TYPE A LOOP DETECTOR. OUTLINE OF SAW CUT SHOWN |
| | | TYPE B LOOP DETECTOR. OUTLINE OF SAW CUT SHOWN |
| | | TYPE C LOOP DETECTOR. OUTLINE OF SAW CUT SHOWN |
| | | TYPE D LOOP DETECTOR. OUTLINE OF SAW CUT SHOWN |
| | | TYPE E LOOP DETECTOR. OUTLINE OF SAW CUT SHOWN |
| | | TYPE Q LOOP DETECTOR. OUTLINE OF SAW CUT SHOWN |
| DH | dh | DETECTOR HANDHOLE |
| | | MICROWAVE OR VIDEO DETECTION ZONE |

STATE OF CALIFORNIA
DEPARTMENT OF TRANSPORTATION

# ELECTRICAL SYSTEMS (LEGEND AND ABBREVIATIONS)

NO SCALE

RSP ES-1C DATED APRIL 15, 2016 SUPERSEDES STANDARD PLAN ES-1C DATED OCTOBER 30, 2015 - PAGE 420 OF THE STANDARD PLANS BOOK DATED 2015.

**REVISED STANDARD PLAN RSP ES-1C**

**2015 REVISED STANDARD PLAN RSP ES-1C**

1-22-16

| Dist | COUNTY | ROUTE | POST MILES TOTAL PROJECT | SHEET No. | TOTAL SHEETS |
|---|---|---|---|---|---|
| 12 | Ora | 55, 57, 91 | 17.5/17.9;15.2/16.0 5.8/6.8;8.7/R9.5 | 86 | 95 |

REGISTERED CIVIL ENGINEER

July 15, 2016
PLANS APPROVAL DATE

REGISTERED PROFESSIONAL ENGINEER
Stanley P. Johnson
No. C57793
Exp. 3-31-18
CIVIL
STATE OF CALIFORNIA

*THE STATE OF CALIFORNIA OR ITS OFFICERS OR AGENTS SHALL NOT BE RESPONSIBLE FOR THE ACCURACY OR COMPLETENESS OF SCANNED COPIES OF THIS PLAN SHEET.*

TO ACCOMPANY PLANS DATED 07-25-2016

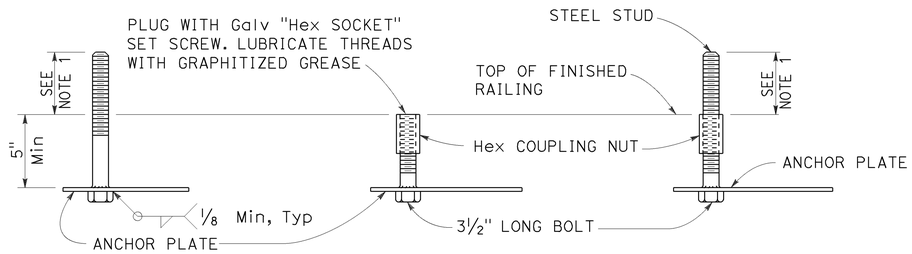


FOR IMMEDIATE INSTALLATION
DETAIL B-1

FOR FUTURE INSTALLATION WITH PLUG
DETAIL B-2

FOR INSTALLATION ON FUTURE ANCHORAGE WITH STUD
DETAIL B-3

## ELECTROLIER ANCHORAGES
DETAIL B

## NOTES:

1. Anchor bolt or stud length shall be such that thread extends 1/2" maximum above nut on level base plate after grouting. See Detail N.
2. Electrolier anchor bolts shall be held in position for pouring by means of anchor plates and suitable templates. Deviation from the true position, vertical and height shall not exceed 1/16".
3. See railing sheets for reinforcement and structural details at electroliers and pull boxes.

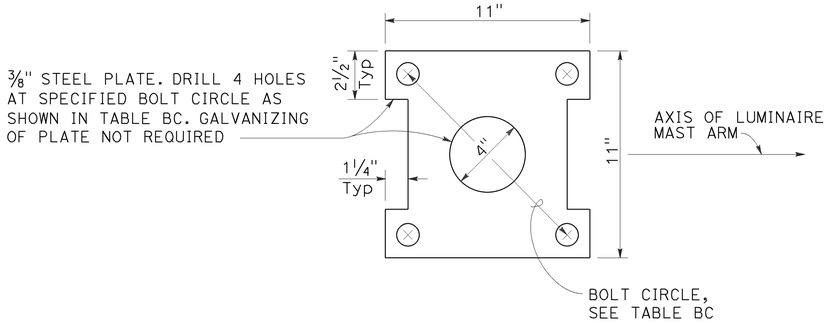


## ANCHOR PLATE
DETAIL A

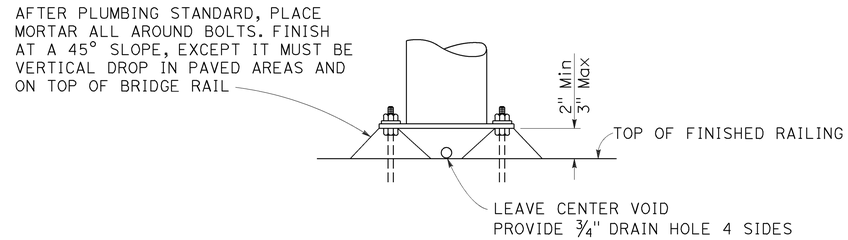


## GROUTING AT ELECTROLIER
DETAIL N

TABLE BC

| TYPE | BC = BOLT CIRCLE | ANCHOR BOLT DIAMETER | COUPLING NUT BASIC LENGTH | SET SCREW LENGTH DETAIL B-2 |
|---|---|---|---|---|
| 15 | 1'-0" | 1" | 3" | 1 1/2" |
| 21 | | 1 1/4" | 3 3/4" | 1 7/8" |

STATE OF CALIFORNIA
DEPARTMENT OF TRANSPORTATION

# ELECTRICAL SYSTEMS (ELECTROLIER ANCHORAGE AND GROUTING FOR TYPE 15 AND TYPE 21 BARRIER RAIL MOUNTED)

NO SCALE

RSP ES-6B DATED JULY 15, 2016 SUPERSEDES STANDARD PLAN ES-6B DATED OCTOBER 30, 2015 - PAGE 450 OF THE STANDARD PLANS BOOK DATED 2015.

**REVISED STANDARD PLAN RSP ES-6B**

**2015 REVISED STANDARD PLAN RSP ES-6B**

4-15-16

| Dist | COUNTY | ROUTE | POST MILES TOTAL PROJECT | SHEET No. | TOTAL SHEETS |
|---|---|---|---|---|---|
| 12 | Ora | 55, 57, 91 | 17.5/17.9;15.2/16.0 5.8/6.8;8.7/R9.5 | 87 | 95 |

REGISTERED CIVIL ENGINEER

July 15, 2016

PLANS APPROVAL DATE

REGISTERED PROFESSIONAL ENGINEER Stanley P. Johnson No. C57793 Exp. 3-31-18 CIVIL STATE OF CALIFORNIA

*THE STATE OF CALIFORNIA OR ITS OFFICERS OR AGENTS SHALL NOT BE RESPONSIBLE FOR THE ACCURACY OR COMPLETENESS OF SCANNED COPIES OF THIS PLAN SHEET.*

TO ACCOMPANY PLANS DATED 07-25-2016

**2015 REVISED STANDARD PLAN RSP ES-6E**

| LUMINAIRE MAST ARM DATA | | | |
|---|---|---|---|
| PROJECTED LENGTH | THICKNESS | MINIMUM OD AT POLE | MOUNTING HEIGHT |
| * 6'-0" | 0.1196" | 3¼" | 36'-9"± |
| * 8'-0" | | 3½" | 37'-3"± |
| * 10'-0" | | 3⅞" | 38'-0"± |
| * 12'-0" | | | 39'-0"± |
| * 15'-0" | | 4¼" | 39'-6"± |
| ** 20'-0" | 0.1793" | 5" | 37'-0"± |

* TYPE 30
** TYPE 31

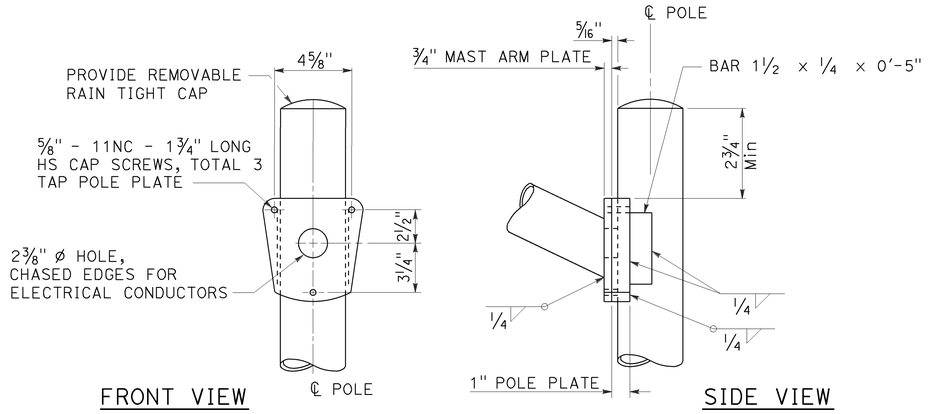


TYPE 30
DETAIL A

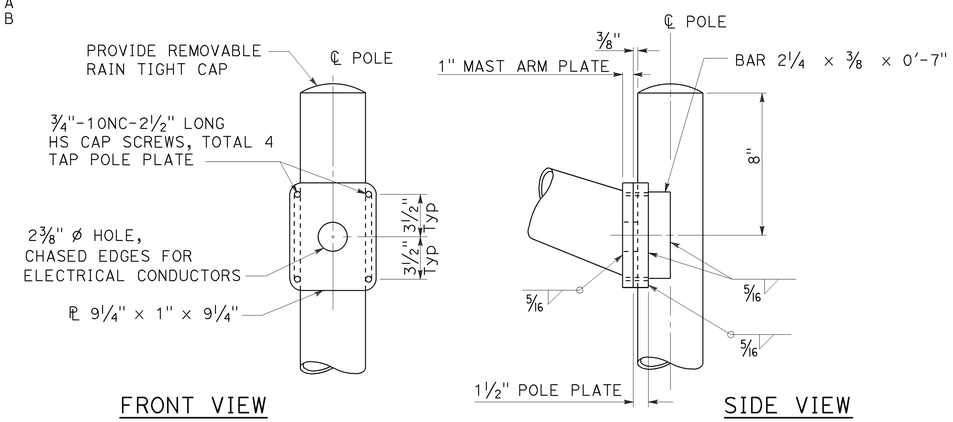


TYPE 31
DETAIL B

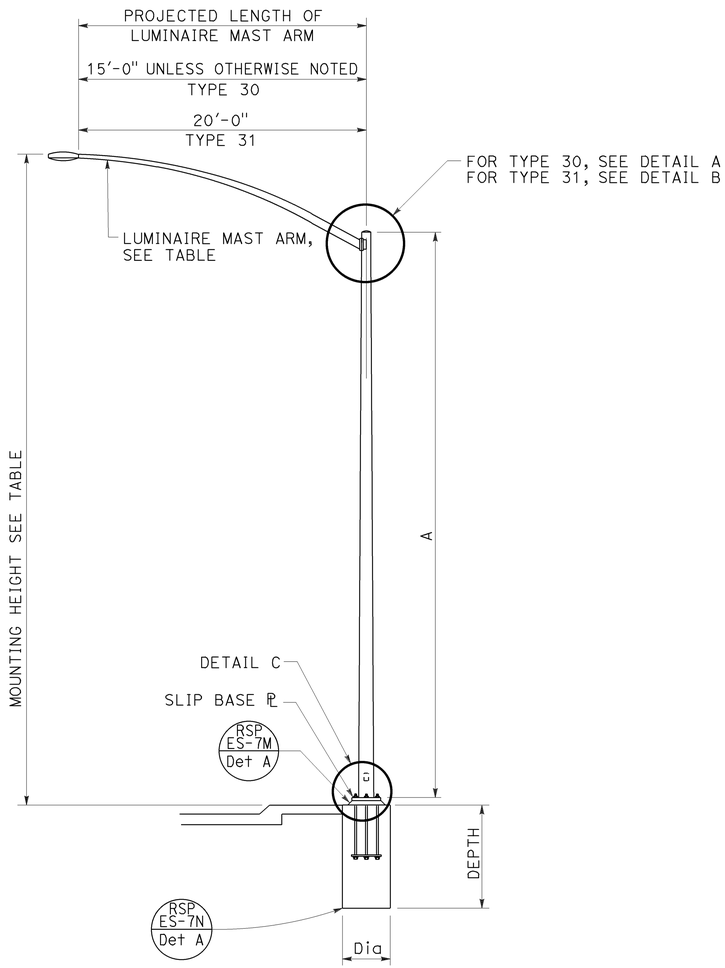


ELEVATION A

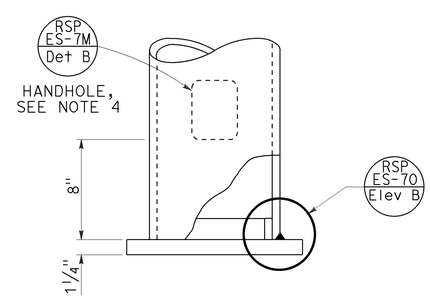


DETAIL C

NOTES:

1. For slip base plate details, see Revised Standard Plan RSP ES-6F.
2. For Type 30 fixed base use Type 15 base plate and foundation shown on Revised Standard Plan RSP ES-6A. Use 1¼" Dia x 3'-6" anchor bolts.
3. For Type 31 fixed base use Type 32 base plate, anchor bolts and foundation on Revised Standard Plan RSP ES-6G.
4. Handhole shall be located on the downstream side of traffic.
5. For additional notes and details, see Revised Standard Plans RSP ES-7M and RSP ES-7N.

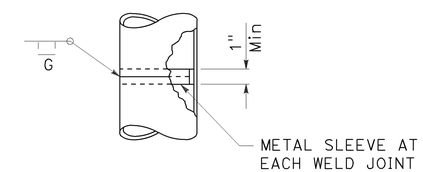


POLE SPLICE

| POLE TYPE | POLE DATA | | | | CIDH PILE FOUNDATION | |
|---|---|---|---|---|---|---|
| | A HEIGHT | Min OD BASE | Min OD TOP | Min THICKNESS | Dia | DEPTH |
| 30 | 35'-0" | 8¾" | 3 11/16" | 0.1196" | 2'-6" | 7'-0" |
| 31 | | 10¾" | 5 11/16" | 0.1793" | 3'-0" | 8'-0" |

STATE OF CALIFORNIA
DEPARTMENT OF TRANSPORTATION

# ELECTRICAL SYSTEMS (LIGHTING STANDARD, TYPES 30 AND 31)

NO SCALE

RSP ES-6E DATED JULY 15, 2016 SUPERSEDES STANDARD PLAN ES-6E DATED OCTOBER 30, 2015 - PAGE 453 OF THE STANDARD PLANS BOOK DATED 2015.

**REVISED STANDARD PLAN RSP ES-6E**

6-20-16

| Dist | COUNTY | ROUTE | POST MILES TOTAL PROJECT | SHEET No. | TOTAL SHEETS |
|---|---|---|---|---|---|
| 12 | Ora | 55, 57, 91 | 17.5/17.9;15.2/16.0 5.8/6.8;8.7/R9.5 | 88 | 95 |

REGISTERED CIVIL ENGINEER

July 15, 2016

PLANS APPROVAL DATE

REGISTERED PROFESSIONAL ENGINEER Stanley P. Johnson No. C57793 Exp. 3-31-18 CIVIL STATE OF CALIFORNIA

*THE STATE OF CALIFORNIA OR ITS OFFICERS OR AGENTS SHALL NOT BE RESPONSIBLE FOR THE ACCURACY OR COMPLETENESS OF SCANNED COPIES OF THIS PLAN SHEET.*

TO ACCOMPANY PLANS DATED 07-25-2016

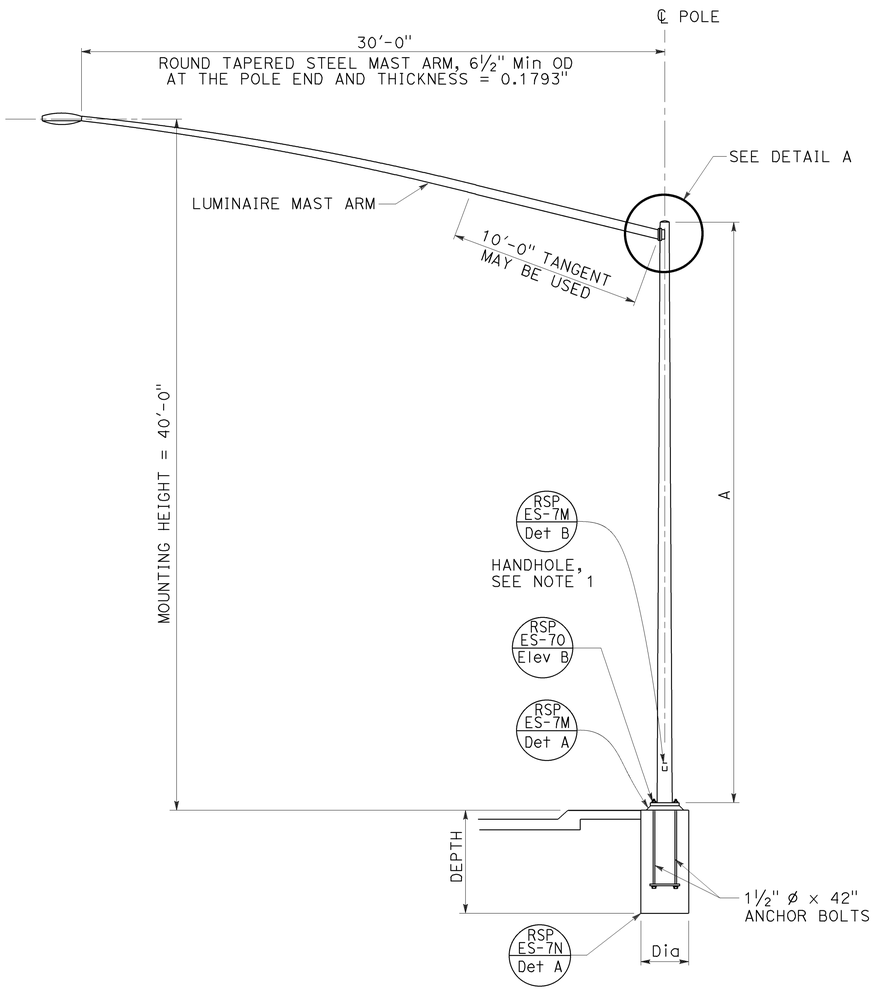


ELEVATION A

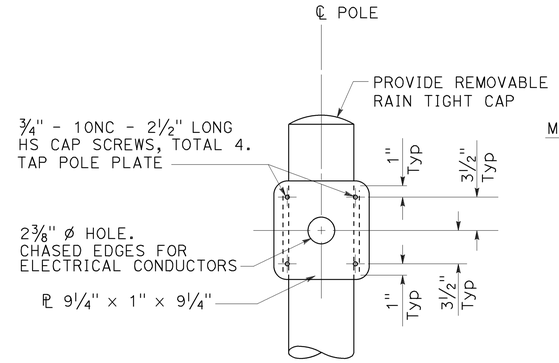


FRONT VIEW

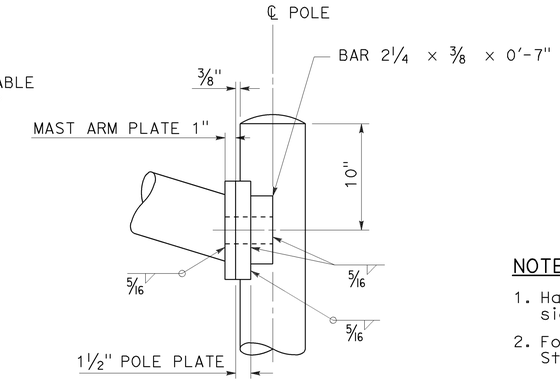


SIDE VIEW

DETAIL A

## NOTES:

1. Handhole shall be located on the downstream side of traffic.
2. For additional notes and details, see Revised Standard Plans RSP ES-7M and RSP ES-7N.

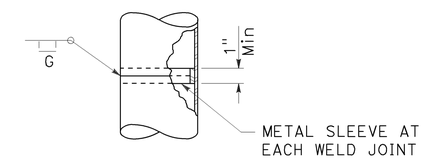


POLE SPLICE
DETAIL B

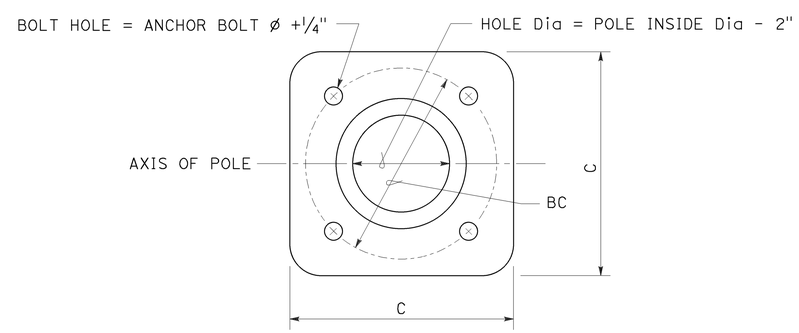


PLAN

BASE PLATE DETAIL
DETAIL C

| POLE TYPE | POLE DATA | | | | BASE PLATE DATA | | | | CIDH PILE FOUNDATION | |
|---|---|---|---|---|---|---|---|---|---|---|
| | A HEIGHT | Min OD BASE | Min OD TOP | Min THICKNESS | C | BC = BOLT CIRCLE | THICKNESS | ANCHOR BOLT SIZE | Dia | DEPTH |
| 32 | 35'-0" | 10¾" | 5 11/16" | 0.1793" | 1'-5" | 1'-3" | 2" | 1½" ø × 42" | 3'-0" | 8'-0" |

STATE OF CALIFORNIA
DEPARTMENT OF TRANSPORTATION

# ELECTRICAL SYSTEMS (LIGHTING STANDARD, TYPE 32)

NO SCALE

RSP ES-6G DATED JULY 15, 2016 SUPERSEDES STANDARD PLAN ES-6G
DATED OCTOBER 30, 2015 - PAGE 455 OF THE STANDARD PLANS BOOK DATED 2015.

**REVISED STANDARD PLAN RSP ES-6G**

**2015 REVISED STANDARD PLAN RSP ES-6G**

6-20-16

| Dist | COUNTY | ROUTE | POST MILES TOTAL PROJECT | SHEET No. | TOTAL SHEETS |
|---|---|---|---|---|---|
| 12 | Ora | 55, 57, 91 | 17.5/17.9;15.2/16.0 5.8/6.8;8.7/R9.5 | 89 | 95 |

REGISTERED CIVIL ENGINEER

July 15, 2016
PLANS APPROVAL DATE

REGISTERED PROFESSIONAL ENGINEER Stanley P. Johnson No. C57793 Exp. 3-31-18 CIVIL STATE OF CALIFORNIA

*THE STATE OF CALIFORNIA OR ITS OFFICERS OR AGENTS SHALL NOT BE RESPONSIBLE FOR THE ACCURACY OR COMPLETENESS OF SCANNED COPIES OF THIS PLAN SHEET.*

TO ACCOMPANY PLANS DATED 07-25-2016

**2015 REVISED STANDARD PLAN RSP ES-7M**

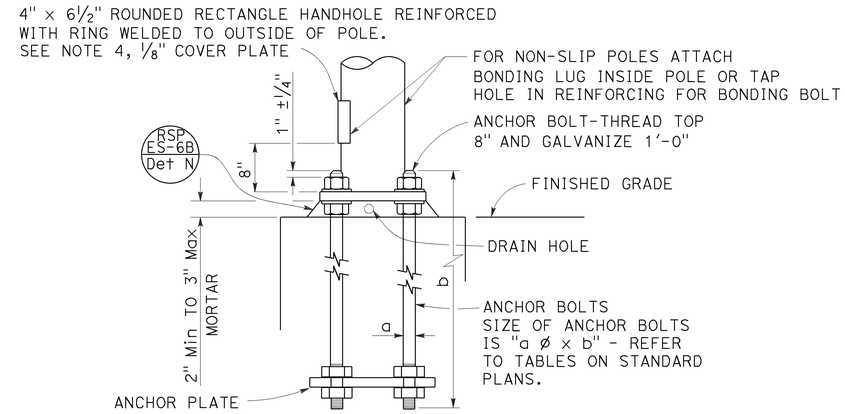


## HANDHOLE AND ANCHORAGE
### DETAIL A

## IDENTIFICATION NUMBER

1. Attach a stamped metal tag with pole's identification number above the handhole. ¼" high number, minimum.
2. Attach a stamped metal tag with mast arm's identification number to the bottom of the signal mast arm near the pole plate. ¼" high number, minimum.

Type — Load case (Use SL for special load case) — Design wind velocity (mph) — Signal mast arm length (ft) {Near handhole: Maximum signal mast arm length for pole type; Near pole plate: Installed signal mast arm length} — Standard plan year — Only for poles or mast arms using Detail F — Only for poles or mast arms using RSP ES-7O

26A - 3 - 100 - 45 - 10 - F or FB

## SAMPLE IDENTIFICATION NUMBER

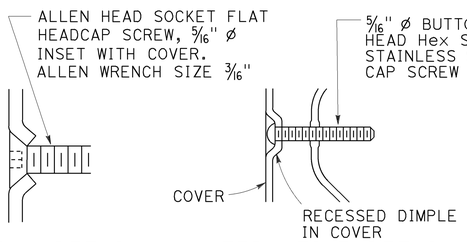


## TYPICAL DETAIL
### DETAIL B-1

## ALTERNATIVE DETAIL
### DETAIL B-2

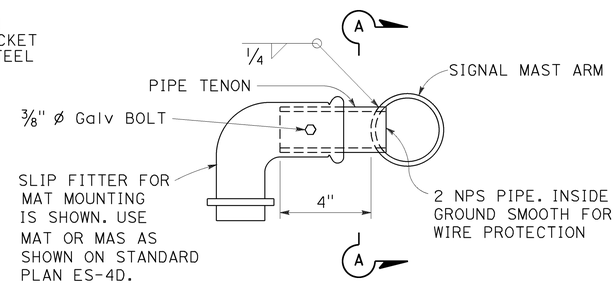


## SIDE TENON
### DETAIL S-1

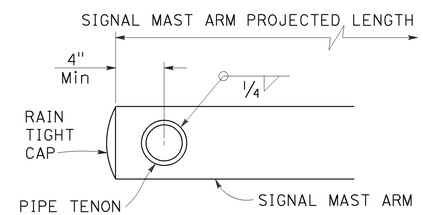


## SECTION A-A

## PIPE TENONS
### DETAIL S

## NOTES:

1. Provide a Hex nut, leveling nut and 2 washers for each bolt.
2. Luminaire mast arms shall be round, tapered steel tubes, taper of 0.1375" to 0.143-inch per foot with an end section 2⅜" OD for mounting hardware. Extensions of 2 NPS Standard pipe and 7" long may be used at the option of the manufacturer. When low pressure sodium luminaires are required, the extension shall be 1'-3".
3. Signal mast arms shall be round, tapered steel tubes, maximum taper 0.143-inch per foot.
4. Handhole reinforcement ring shall be ¼" x 2" for 0.1196" to 0.2391" thick poles, ⅜" x 2" for 0.3125" to 0.375" thick poles.
5. Handholes shall be located on the downstream side of traffic.
6. Detail F, fatigue resistant weld, is required at socket welded signal mast arm plate and pole base plate.
7. Cap screws shall be tightened by the turn-of-nut method ⅓ turn from a snug tight condition. No washer will be required.
8. Outside diameter, wall thickness, and corresponding section properties of poles and mast arms as shown in the Standard Plans are minimums. Unless otherwise specified, alternative sections shall require approval by the Engineer.
9. Design: AASHTO Standard Specifications for Structural Support for Highway Signs, Luminaires, and Traffic Signals, 6th Edition. Basic Wind Speed = 100 mph (3 seconds gust). Yearly Mean Wind Velocity = 15.6 mph.
10. Materials (Structural steel):
    fy = 55,000 psi (tapered steel tube and anchor bolts)
    fy = 50,000 psi (unless otherwise noted)
11. Materials (Reinforced concrete):
    f'c = 3,625 psi
    fy = 60,000 psi

| WELD SIZE | WALL THICKNESS |
|---|---|
| ⅜" | 0.1196" |
| ¼" | 0.1793" |
| 5/16" | 0.2391" |
| ⅜" | 0.3125" |
| 7/16" | 0.375" |

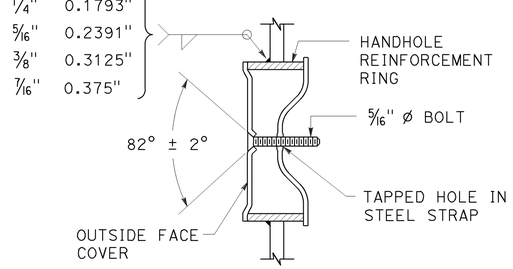


## TAMPER RESISTANT HANDHOLE COVER
### DETAIL B

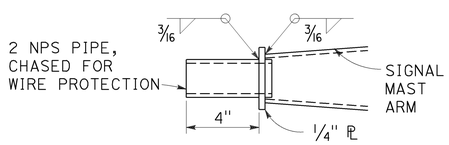


## TIP TENON
### DETAIL TL

This detail supersedes Detail S when so designated

| WELD SIZE | WALL THICKNESS |
|---|---|
| ⅛" | 0.1196" |
| 3/16" | 0.1793" |
| ¼" | 0.2391" |

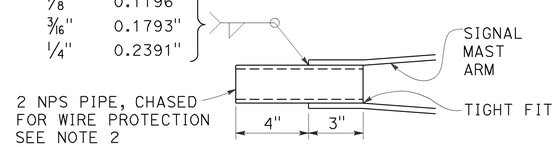


## TIP TENON
### DETAIL TS

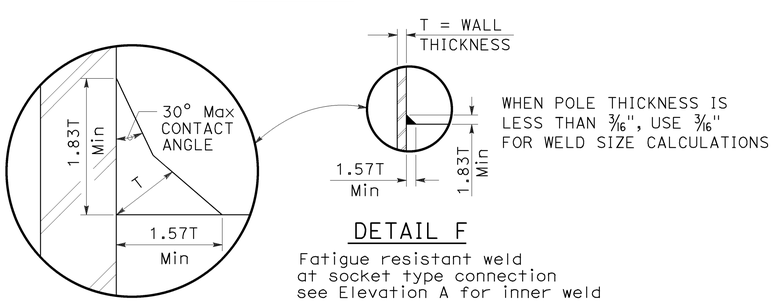


## DETAIL F

Fatigue resistant weld at socket type connection see Elevation A for inner weld

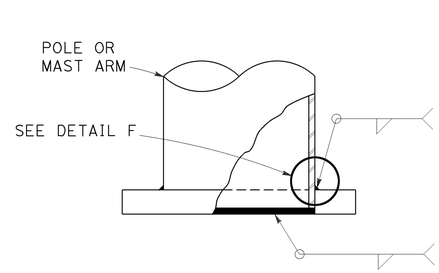


| WELD SIZE | WALL THICKNESS |
|---|---|
| ¼" | 0.1196" |
| 5/16" | 0.1793" |
| ⅜" | 0.2391" |
| 7/16" | 0.3125" |

| | |
|---|---|
| ⅛" | 0.1196" |
| 3/16" | 0.1793" |
| ¼" | 0.2391" |
| 5/16" | 0.3125" |

## ELEVATION A

STATE OF CALIFORNIA
DEPARTMENT OF TRANSPORTATION

# ELECTRICAL SYSTEMS (SIGNAL AND LIGHTING STANDARD, DETAIL No. 1)

NO SCALE

RSP ES-7M DATED JULY 15, 2016 SUPERSEDES STANDARD PLAN ES-7M DATED OCTOBER 30, 2015 - PAGE 467 OF THE STANDARD PLANS BOOK DATED 2015.

**REVISED STANDARD PLAN RSP ES-7M**

6-20-16

| Dist | COUNTY | ROUTE | POST MILES TOTAL PROJECT | SHEET No. | TOTAL SHEETS |
|---|---|---|---|---|---|
| 12 | Ora | 55, 57, 91 | 17.5/17.9;15.2/16.0 5.8/6.8;8.7/R9.5 | 90 | 95 |

REGISTERED CIVIL ENGINEER

July 15, 2016
PLANS APPROVAL DATE

REGISTERED PROFESSIONAL ENGINEER Stanley P. Johnson No. C57793 Exp. 3-31-18 CIVIL STATE OF CALIFORNIA

*THE STATE OF CALIFORNIA OR ITS OFFICERS OR AGENTS SHALL NOT BE RESPONSIBLE FOR THE ACCURACY OR COMPLETENESS OF SCANNED COPIES OF THIS PLAN SHEET.*

TO ACCOMPANY PLANS DATED 07-25-2016

**2015 REVISED STANDARD PLAN RSP ES-7N**

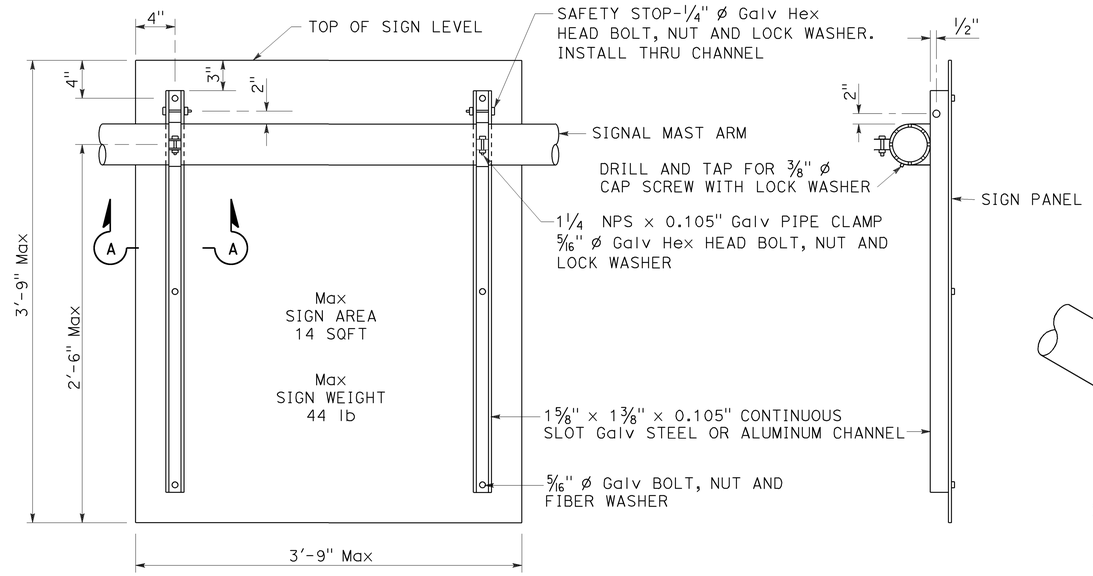


REAR VIEW

SIDE VIEW

## SIGN MOUNTING DETAILS
DETAIL U

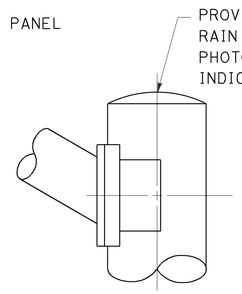


STANDARD TOP
DETAIL B-1

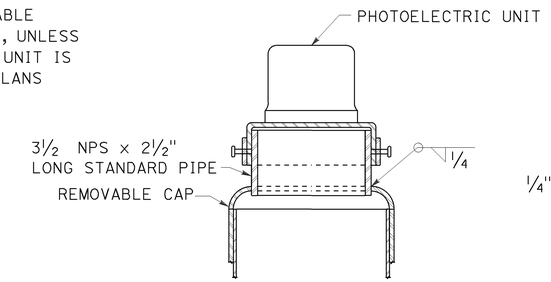


MOUNTING ADAPTER FOR
PHOTOELECTRIC UNIT
DETAIL B-2

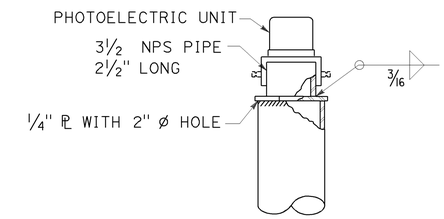


ALTERNATIVE
MOUNTING ADAPTER
DETAIL B-3

## POLE TOP DETAILS
DETAIL B

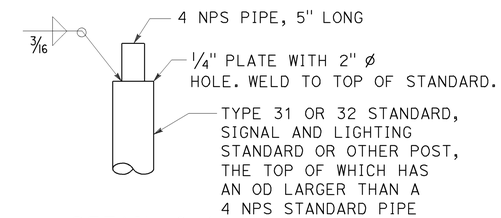


DETAIL C-1

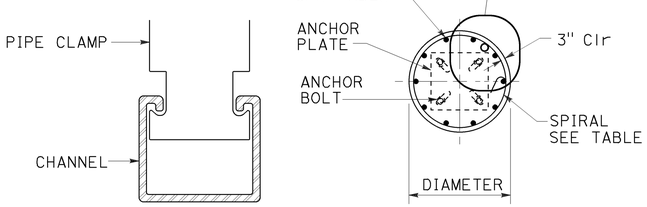


SECTION A-A

SECTION B-B

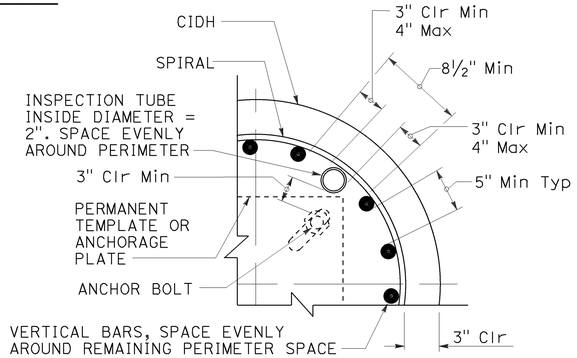


INSPECTION TUBE PLACEMENT
DETAIL I

| CIDH REINFORCING AND INSPECTION TUBE SCHEDULE | | | |
|---|---|---|---|
| CIDH DIAMETER | VERTICAL BARS | SPIRAL | INSPECTION TUBE |
| 2 ft | 8-#5 | #4 AT 6 | 2 |
| 2.5 ft | 10-#6 | #5 AT 6 | 4* |
| 3 ft | 12-#7 | | |
| 3.5 ft | 14-#8 | | 4 |
| 4 ft | 18-#9 | 2-#4 AT 7 | 5 |
| 4.5 ft | 18-#9 | 2-#5 AT 7 | 5 |
| 5 ft | 22-#10 | 2-#5 AT 7 | 6 |
| 6 ft | 26-#11 | 2-#6 AT 7 | 7 |

* FOR SLIP BASE VERSIONS WITH 3 ANCHOR BOLTS USE 3 INSPECTION TUBES.

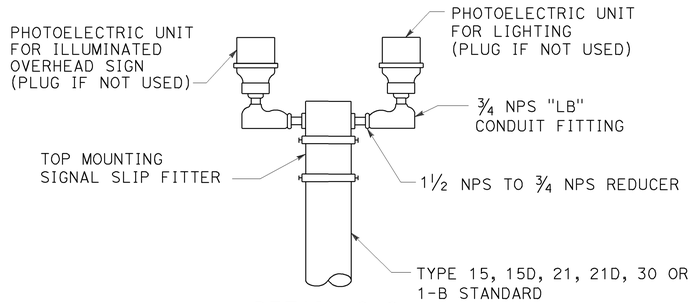


DETAIL C-2

## DUAL PHOTOELECTRIC UNIT MOUNTING DETAIL
DETAIL C

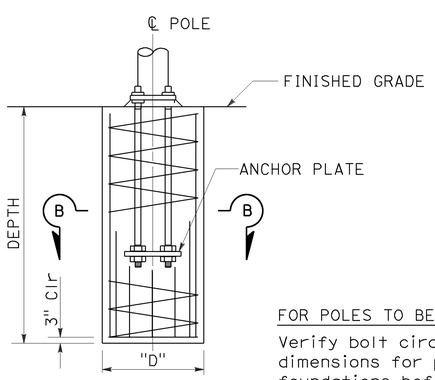


ELEVATION

FOR POLES TO BE INSTALLED ON EXISTING FOUNDATION:

Verify bolt circles, anchor bolt sizes and dependent dimensions for poles to be installed on existing foundations before fabricating the poles.

## CAST-IN-DRILLED-HOLE PILE FOUNDATION, REINFORCED PILE
DETAIL A

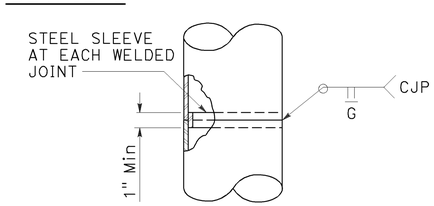


FOR UNIFORM TUBE THICKNESS
DETAIL T-1

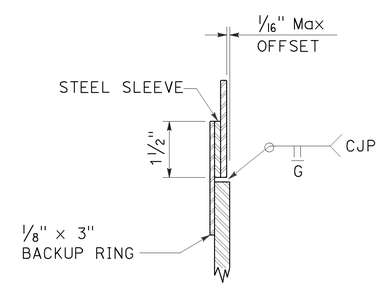


AT TUBE THICKNESS CHANGE
DETAIL T-2

## POLE SPLICES
DETAIL T

STATE OF CALIFORNIA
DEPARTMENT OF TRANSPORTATION

# ELECTRICAL SYSTEMS (SIGNAL AND LIGHTING STANDARD, DETAIL No. 2)

NO SCALE

RSP ES-7N DATED JULY 15, 2016 SUPERSEDES STANDARD PLAN ES-7N
DATED OCTOBER 30, 2015 - PAGE 468 OF THE STANDARD PLANS BOOK DATED 2015.

**REVISED STANDARD PLAN RSP ES-7N**

6-20-16

| Dist | COUNTY | ROUTE | POST MILES TOTAL PROJECT | SHEET No. | TOTAL SHEETS |
|---|---|---|---|---|---|
| 12 | Ora | 55,57, 91 | 17.5/17.9;15.2/16.0 5.8/6.8;8.7/R9.5 | 91 | 95 |

Theresa Gabriel
REGISTERED ELECTRICAL ENGINEER

April 15, 2016
PLANS APPROVAL DATE

REGISTERED PROFESSIONAL ENGINEER Theresa Aziz Gabriel No. E15129 Exp. 6-30-16 ELECTRICAL STATE OF CALIFORNIA

*THE STATE OF CALIFORNIA OR ITS OFFICERS OR AGENTS SHALL NOT BE RESPONSIBLE FOR THE ACCURACY OR COMPLETENESS OF SCANNED COPIES OF THIS PLAN SHEET.*

TO ACCOMPANY PLANS DATED 07-25-2016

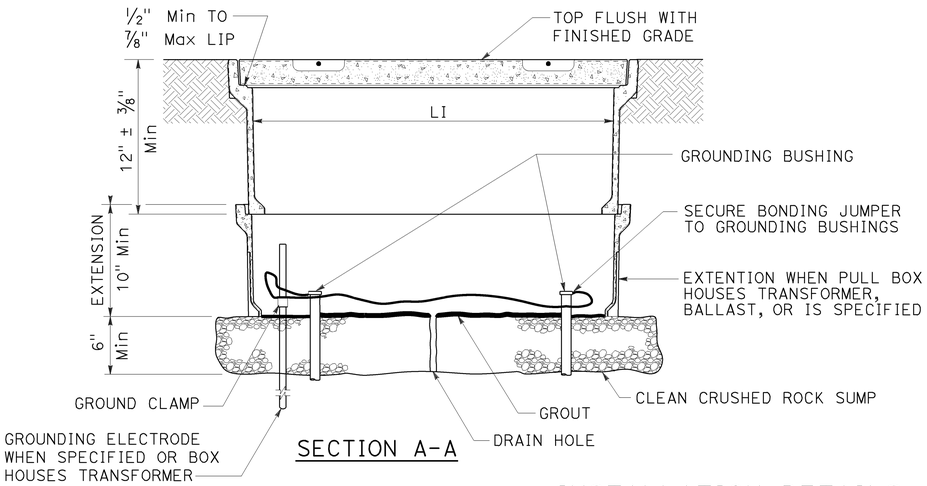


SECTION A-A

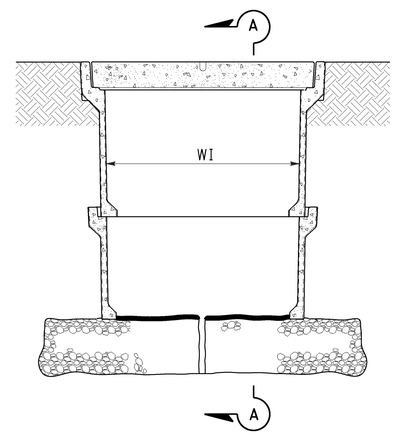


SIDE VIEW

## INSTALLATION DETAILS

### DETAIL A

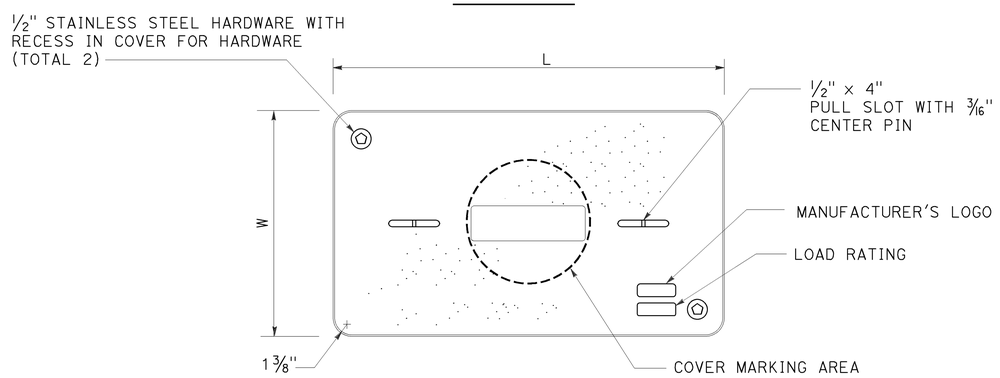


COVER TOP VIEW

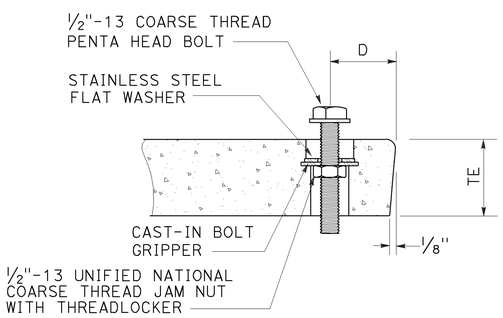


TYPICAL COVER CAPTIVE BOLT

OR SIMILAR

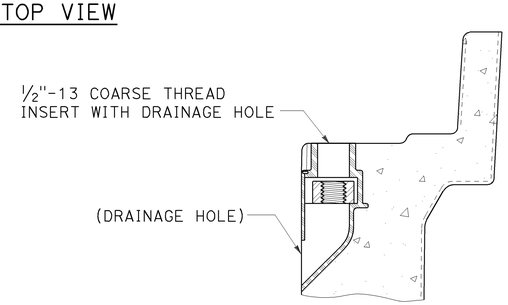


TYPICAL THREADED INSERT

OR SIMILAR

## NOTES:

1. The nominal dimensions of the opening in which the cover sets shall be the same as the cover dimensions except the length and width dimensions shall be 1/8" greater.
2. Covers and boxes shall be interchangeable with California standard male and female gages. When interchanged with a standard male or female gage, the top surfaces shall be flush within 1/8". Top outside radius of covers and pull boxes shall have a 1/8" radius.
3. Dimensions for the cover for non-traffic pull box are nominal values.

### DIMENSION TABLE

| PULL BOX | PULL BOX | | | | | COVER | | | | |
|---|---|---|---|---|---|---|---|---|---|---|
| | MINIMUM DEPTH BOX | MINIMUM DEPTH EXTENSION | MINIMUM WEIGHT | LI Min | WI Min | TE | D | L | W | MINIMUM WEIGHT |
| No. 3 1/2 | 12" | N/A | 40 lb | 1' - 3" | 9" | 1 3/4" | 1 3/4" | 1'-3 1/4" - 1'-3 3/8" | 10" - 10 1/8" | 30 lb |
| No. 5 | 12" | 10" | 55 lb | 1' - 8" | 11" | 2" | 1 3/4" | 1'-11 1/4" | 1'-1 3/4" | 60 lb |
| No. 6 | 12" | 10" | 70 lb | 2' - 4 1/4" | 1' - 3 1/4" | 2" | 2" | 2'-6 1/2" | 1'-5 1/2" | 85 lb |

STATE OF CALIFORNIA
DEPARTMENT OF TRANSPORTATION

# ELECTRICAL SYSTEMS (NON-TRAFFIC PULL BOX)

NO SCALE

RSP ES-8A DATED APRIL 15, 2016 SUPERSEDES STANDARD PLAN ES-8A
DATED OCTOBER 30, 2015 - PAGE 473 OF THE STANDARD PLANS BOOK DATED 2015.

**REVISED STANDARD PLAN RSP ES-8A**

**2015 REVISED STANDARD PLAN RSP ES-8A**

1-22-16

| Dist | COUNTY | ROUTE | POST MILES TOTAL PROJECT | SHEET No. | TOTAL SHEETS |
|---|---|---|---|---|---|
| 12 | Ora | 55, 57, 91 | 17.5/17.9;15.2/16.0 5.8/6.8;8.7/R9.5 | 92 | 95 |

Theresa Gabriel
REGISTERED ELECTRICAL ENGINEER

April 15, 2016
PLANS APPROVAL DATE

REGISTERED PROFESSIONAL ENGINEER
Theresa Aziz Gabriel
No. E15129
Exp. 6-30-16
ELECTRICAL
STATE OF CALIFORNIA

*THE STATE OF CALIFORNIA OR ITS OFFICERS OR AGENTS SHALL NOT BE RESPONSIBLE FOR THE ACCURACY OR COMPLETENESS OF SCANNED COPIES OF THIS PLAN SHEET.*

TO ACCOMPANY PLANS DATED **07-25-2016**

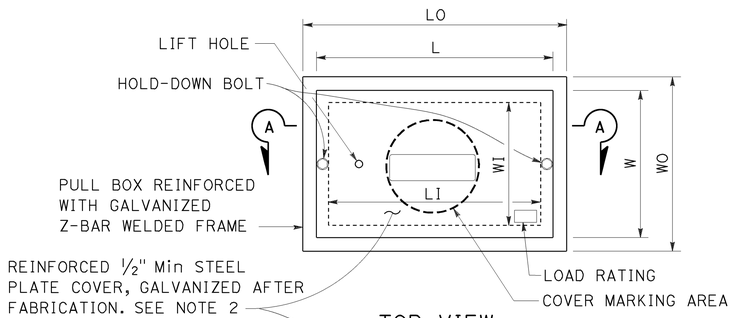


TOP VIEW

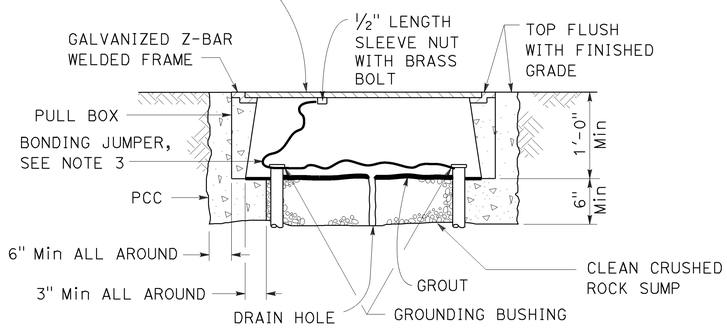


SECTION A-A

## No. 3½(T), No. 5(T) AND No. 6(T) TRAFFIC PULL BOX

## NOTES:

1. Traffic pull box shall be provided with steel cover and special concrete footing. Steel cover shall have embossed non-skid pattern.
2. Steel reinforcing shall be as regularly used in the standard products of the respective manufacturer.
3. Bonding jumper for metal covers shall be 3' long, minimum.
4. The nominal dimensions of the opening in which the cover sets shall be the same as the cover dimensions except the length and width dimensions shall be ⅛" greater.
5. Covers and boxes shall be interchangeable with California standard male and female gages. When interchanged with a standard male or female gage, the top surfaces shall be flush within ⅛".

DIMENSION TABLE

| PULL BOX | PULL BOX | | | | | | COVER | |
|---|---|---|---|---|---|---|---|---|
| | MINIMUM * THICKNESS | MINIMUM DEPTH BOX AND EXTENSION | LO | LI | WO | WI | L ** | W ** |
| No. 3½(T) | 1½" | 1'-0" | 1'-10" - 1'-11" | 1'-5" - 1'-6½" | 1'-3" - 1'-4" | 10" - 1'-0" | 1'-8" - 1'-8½" | 1'-1" - 1'-2" |
| No. 5(T) | 1¾" | 1'-0" | 2'-5" - 2'-6" | 2'-0" - 2'-1" | 1'-6" - 1'-7" | 1'-1" - 1'-2" | 2'-3" - 2'-3½" | 1'-4" - 1'-4½" |
| No. 6(T) | 2" | 1'-0" | 2'-11" - 3'-1" | 2'-6" - 2'-7" | 1'-10" - 2'-0" | 1'-5" - 1'-6" | 2'-9" - 2'-9½" | 1'-8" - 1'-8½" |

* EXCLUDING CONDUIT WEB ** TOP DIMENSION

STATE OF CALIFORNIA
DEPARTMENT OF TRANSPORTATION

# ELECTRICAL SYSTEMS (TRAFFIC PULL BOX)

NO SCALE

RSP ES-8B DATED APRIL 15, 2016 SUPERSEDES STANDARD PLAN ES-8B DATED OCTOBER 30, 2015 - PAGE 474 OF THE STANDARD PLANS BOOK DATED 2015.

**REVISED STANDARD PLAN RSP ES-8B**

**2015 REVISED STANDARD PLAN RSP ES-8B**

1-22-16

| Dist | COUNTY | ROUTE | POST MILES TOTAL PROJECT | SHEET No. | TOTAL SHEETS |
|---|---|---|---|---|---|
| 12 | Ora | 55, 57, 91 | 17.5/17.9;15.2/16.0 5.8/6.8;8.7/R9.5 | 93 | 95 |

REGISTERED CIVIL ENGINEER

July 15, 2016
PLANS APPROVAL DATE

REGISTERED PROFESSIONAL ENGINEER
Stanley P. Johnson
No. C57793
Exp. 3-31-18
CIVIL
STATE OF CALIFORNIA

*THE STATE OF CALIFORNIA OR ITS OFFICERS OR AGENTS SHALL NOT BE RESPONSIBLE FOR THE ACCURACY OR COMPLETENESS OF SCANNED COPIES OF THIS PLAN SHEET.*

TO ACCOMPANY PLANS DATED **07-25-2016**

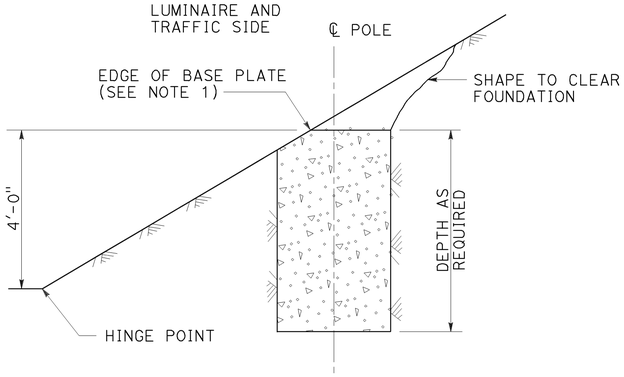


CUT SLOPES
STEEPER THAN 4:1,
LESS THAN 2:1
DETAIL A-1
See Note 2 and 3

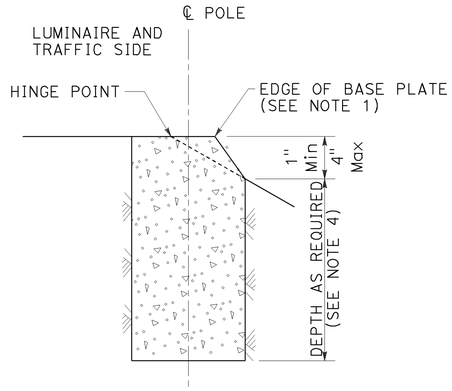


FILL SLOPES
STEEPER THAN 4:1,
LESS THAN 2:1
DETAIL A-2
See Note 2 and 3

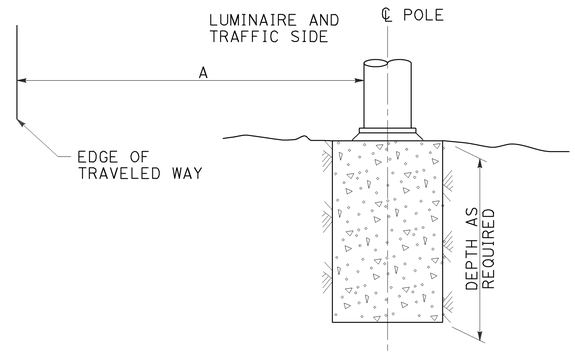


FLAT SECTIONS, CUT OR FILL SLOPES
4:1 OR FLATTER
DETAIL A-3
See Note 2

| STANDARD TYPE | SETBACK (DIMENSION A) |
|---|---|
| 32 | 30'-0" (Min) |
| 31 | 20'-0" (Min) |
| 15, 15D, 15-SB, 21, 21D, 30 | ARM LENGTH (Min) |

FOUNDATIONS ADJACENT TO ALL ROADWAYS EXCEPT
IN SIDEWALK, MEDIAN AND ISLAND AREAS
DETAIL A

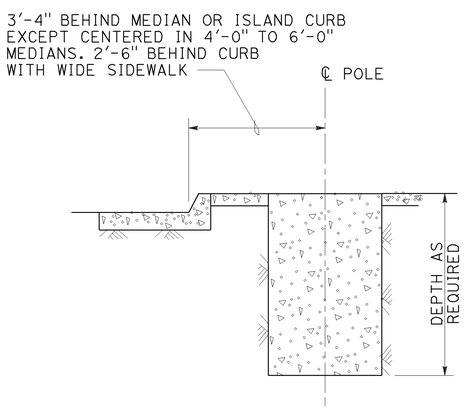


MEDIAN, ISLAND
OR WIDE SIDEWALK
DETAIL B-1
7' Wide and wider

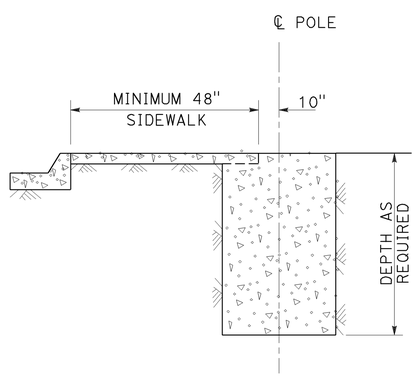


NARROW SIDEWALK
DETAIL B-2
Less than 7' wide

FOUNDATIONS IN SIDEWALK, MEDIAN AND ISLAND AREAS
DETAIL B

NOTES:

1. Where a portion of the foundation is above grade, the top edges shall have a 1" chamfer.
2. Slopes shall be horizontal to vertical ratio (Horizontal : Vertical).
3. Horizontal setbacks on cut and fill slopes steeper than 4:1 shall not exceed the distance shown for flat sections.
4. CIDH embedment depth shall be increased beyond standard depths by the diameter of the CIDH.

STATE OF CALIFORNIA
DEPARTMENT OF TRANSPORTATION

# ELECTRICAL SYSTEMS (FOUNDATION INSTALLATIONS)

NO SCALE

RSP ES-11 DATED JULY 15, 2016 SUPERSEDES STANDARD PLAN ES-11 DATED DATED OCTOBER 30, 2015 - PAGE 483 OF THE STANDARD PLANS BOOK DATED 2015.

**REVISED STANDARD PLAN RSP ES-11**

**2015 REVISED STANDARD PLAN RSP ES-11**

6-20-16

| Dist | COUNTY | ROUTE | POST MILES TOTAL PROJECT | SHEET No. | TOTAL SHEETS |
|---|---|---|---|---|---|
| 12 | Ora | 55,57, 91 | 17.5/17.9;15.2/16.0 5.8/6.8;8.7/R9.5 | 94 | 95 |

Theresa Gabriel
REGISTERED ELECTRICAL ENGINEER

April 15, 2016
PLANS APPROVAL DATE

REGISTERED PROFESSIONAL ENGINEER Theresa Aziz Gabriel No. E15129 Exp. 6-30-16 ELECTRICAL STATE OF CALIFORNIA

*THE STATE OF CALIFORNIA OR ITS OFFICERS OR AGENTS SHALL NOT BE RESPONSIBLE FOR THE ACCURACY OR COMPLETENESS OF SCANNED COPIES OF THIS PLAN SHEET.*

TO ACCOMPANY PLANS DATED 07-25-2016

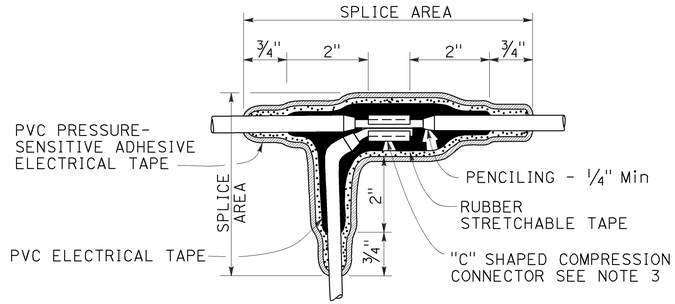


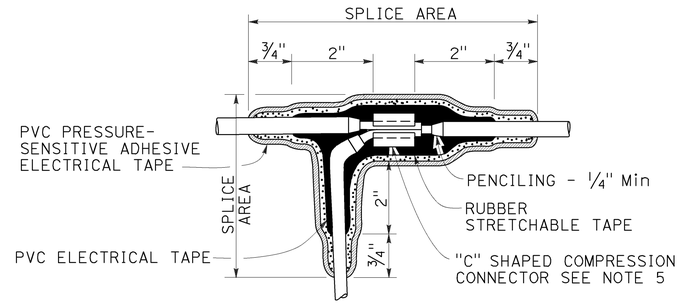


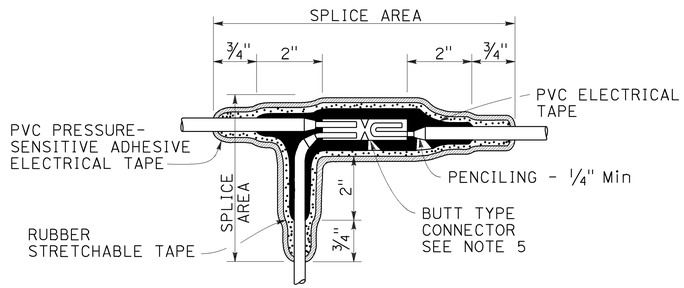


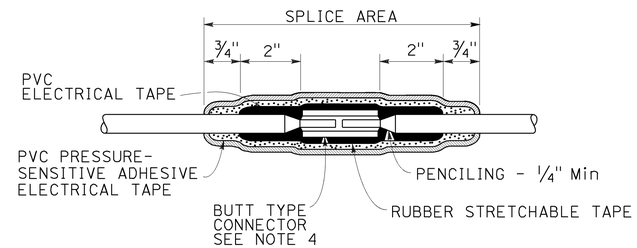


## TYPICAL SPLICE INSULATION METHOD B

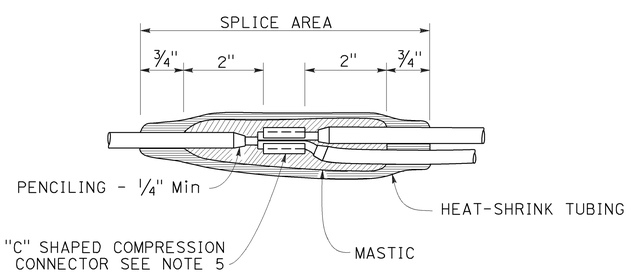


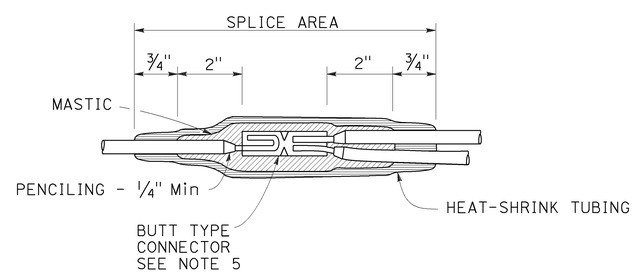


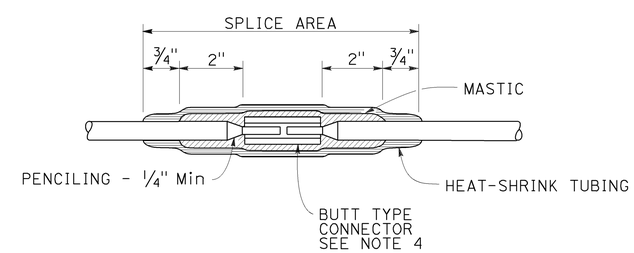


## TYPICAL SPLICE INSULATION HEAT-SHRINK TUBING

NOTES:

1. Dimensions are minimum.
2. Rubber tapes shall be rolled after application.
3. Between 1 free-end and 1 through conductor.
4. Between 2 free-end conductors.
5. Between 3 free-end conductors.

STATE OF CALIFORNIA
DEPARTMENT OF TRANSPORTATION

# ELECTRICAL SYSTEMS (SPLICE INSULATION METHODS DETAILS)

NO SCALE

RSP ES-13A DATED APRIL 15, 2016 SUPERSEDES STANDARD PLAN ES-13A DATED OCTOBER 30, 2015 - PAGE 484 OF THE STANDARD PLANS BOOK DATED 2015.

**REVISED STANDARD PLAN RSP ES-13A**

2015 REVISED STANDARD PLAN RSP ES-13A

12-16-15

| Dist | COUNTY | ROUTE | POST MILES TOTAL PROJECT | SHEET No. | TOTAL SHEETS |
|---|---|---|---|---|---|
| 12 | Ora | 55, 57, 91 | 17.5/17.9;15.2/16.0 5.8/6.8;8.7/R9.5 | 95 | 95 |

Theresa Gabriel
REGISTERED ELECTRICAL ENGINEER

April 15, 2016
PLANS APPROVAL DATE

REGISTERED PROFESSIONAL ENGINEER Theresa Aziz Gabriel No. E15129 Exp. 6-30-16 ELECTRICAL STATE OF CALIFORNIA

*THE STATE OF CALIFORNIA OR ITS OFFICERS OR AGENTS SHALL NOT BE RESPONSIBLE FOR THE ACCURACY OR COMPLETENESS OF SCANNED COPIES OF THIS PLAN SHEET.*

TO ACCOMPANY PLANS DATED 07-25-2016

| CIRCUIT VOLTAGE | FUSE VOLTAGE RATING | FUSE CURRENT RATING | | | | | | |
|---|---|---|---|---|---|---|---|---|
| | | HPS LAMP BALLAST | | LOW PRESSURE SODIUM BALLAST | INDUCTION SIGN LIGHTING | SINGLE PHASE (TWO WIRE) TRANSFORMERS (PRIMARY SIDE) | | |
| | | 70 W | 100 W | 180 W | 85 W | 1 kVA | 2 kVA | 3 kVA |
| 120 V | 250 V | 5 A | 5 A | 5 A | 5 A | 10 A | 20 A | 30 A |
| 240 V | 250 V | 5 A | 5 A | 5 A | 5 A | 6 A | 10 A | 20 A |
| 480 V | 500-600 V | 5 A | 5 A | 3 A | 1 A (SEE NOTE 2) | 3 A | 6 A | 10 A |

NOTES:

1. Primary lines of multiple ballasts shall be provided with fused connectors. Fuse ratings shall be as noted above.
2. See Standard Plan ES-15D, Type SC3 control.

## FUSE RATINGS FOR FUSED CONNECTORS

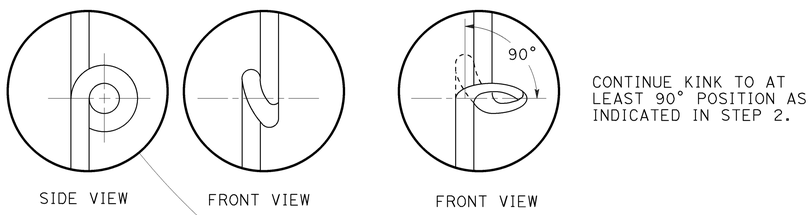


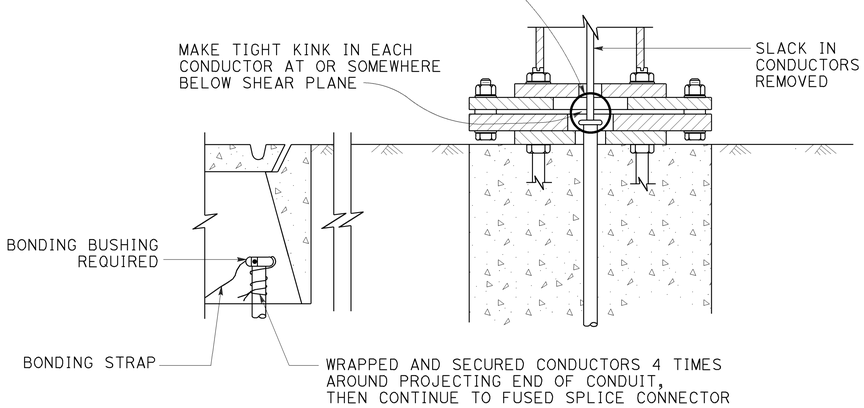


## KINKING DETAIL FOR SLIP BASE STANDARDS

DETAIL A

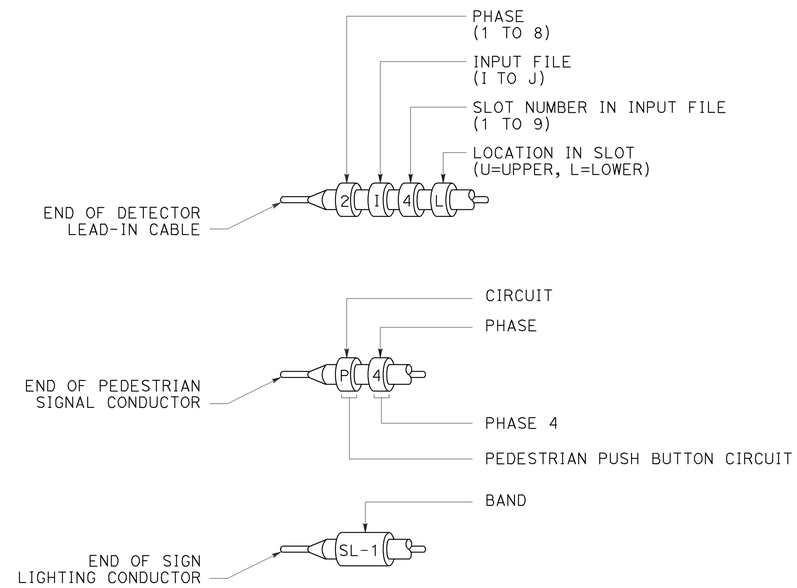


## TYPICAL BANDING DETAILS

DETAIL B

STATE OF CALIFORNIA
DEPARTMENT OF TRANSPORTATION

# ELECTRICAL SYSTEMS (FUSE RATING, KINKING AND BANDING DETAIL)

NO SCALE

RSP ES-13B DATED APRIL 15, 2016 SUPERSEDES STANDARD PLAN ES-13B DATED OCTOBER 30, 2015 - PAGE 485 OF THE STANDARD PLANS BOOK DATED 2015.

**REVISED STANDARD PLAN RSP ES-13B**

**2015 REVISED STANDARD PLAN RSP ES-13B**

1-12-16