Dist	COUNTY	ROUTE	POST MILES TOTAL PROJECT	SHEET No.	TOTAL SHEETS
12	Ora	5,55, 22,73	Var	101	105

REGISTERED CIVIL ENGINEER

October 30, 2015
PLANS APPROVAL DATE

REGISTERED PROFESSIONAL ENGINEER
Stanley P. Johnson
No. C57793
Exp. 3-31-16
CIVIL
STATE OF CALIFORNIA

THE STATE OF CALIFORNIA OR ITS OFFICERS OR AGENTS SHALL NOT BE RESPONSIBLE FOR THE ACCURACY OR COMPLETENESS OF SCANNED COPIES OF THIS PLAN SHEET.

TO ACCOMPANY PLANS DATED 1-19-2016

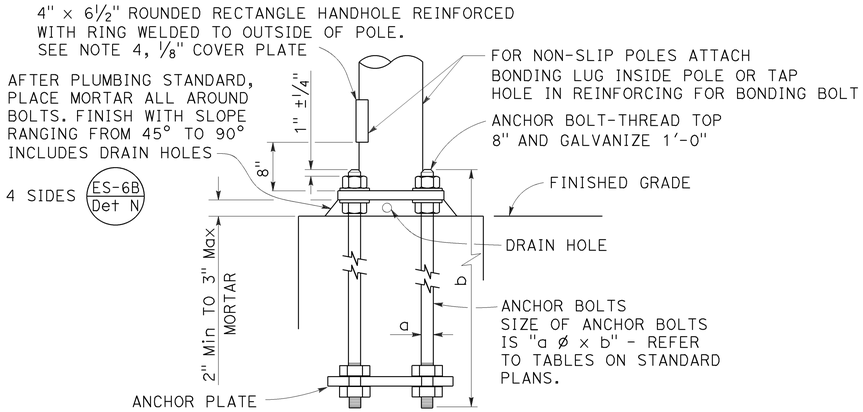

HANDHOLE AND ANCHORAGE
DETAIL A

IDENTIFICATION NUMBER

1. Attach a stamped metal tag with pole's identification number above the handhole. ¼" high number, minimum.
2. Attach a stamped metal tag with mast arm's identification number to the bottom of the signal mast arm near the pole plate. ¼" high number, minimum.

Type — Load case (Use SL for special load case) — Design wind velocity (mph) — Signal mast arm length (ft) { Near handhole: Maximum signal mast arm length for pole type; Near pole plate: Installed signal mast arm length } — Standard plan year — Only for poles or mast arms using Detail F — Only for poles or mast arms using ES-7D

26A - 3 - 100 - 45 - 10 - F or FB

SAMPLE IDENTIFICATION NUMBER

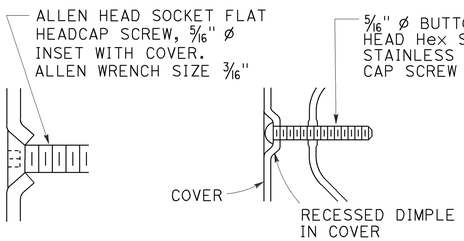

TYPICAL DETAIL
DETAIL B-1

ALTERNATIVE DETAIL
DETAIL B-2

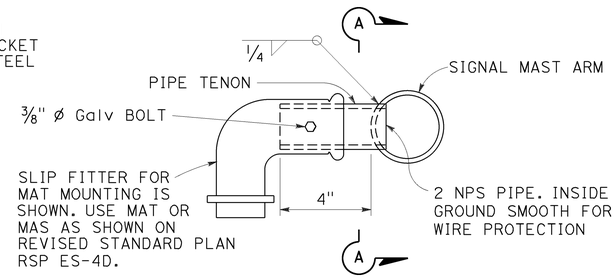

SIDE TENON
DETAIL S-1

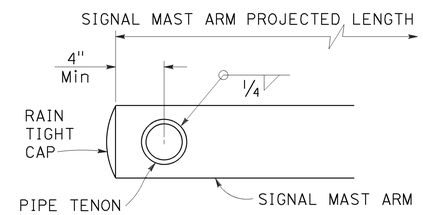

SECTION A-A

PIPE TENONS
DETAIL S

NOTES:

1. Provide a Hex nut, leveling nut and 2 washers for each bolt.
2. Luminaire mast arms shall be round, tapered steel tubes, taper of 0.1375" to 0.143-inch per foot with an end section 2⅜" OD for mounting hardware. Extensions of 2 NPS Standard pipe and 7" long may be used at the option of the manufacturer. When low pressure sodium luminaires are required, the extension shall be 1'-3".
3. Signal mast arms shall be round, tapered steel tubes, maximum taper 0.143-inch per foot.
4. Handhole reinforcement ring shall be ¼" x 2" for 0.1196" to 0.2391" thick poles, ⅜" x 2" for 0.3125" thick poles.
5. Handholes shall be located on the downstream side of traffic.
6. Detail F, fatigue resistant weld, is required at socket welded signal mast arm plate and pole base plate.
7. Cap screws shall be tightened by the turn-of-nut method ⅓ turn from a snug tight condition. No washer will be required.
8. Outside diameter, wall thickness, and corresponding section properties of poles and mast arms as shown in the Standard Plans are minimums. Unless otherwise specified, alternative sections shall require approval by the Engineer.
9. Wind Loading (3 seconds gust): 100 mph
10. Unit Stresses (Structural steel):
    fy = 55,000 psi (tapered steel tube and anchor bolts)
    fy = 50,000 psi (unless otherwise noted)
11. Unit Stresses (Reinforced concrete):
    f'c = 3,625 psi
    fy = 60,000 psi

WELD SIZE	WALL THICKNESS
3/16"	0.1196"
¼"	0.1793"
5/16"	0.2391"
⅜"	0.3125"

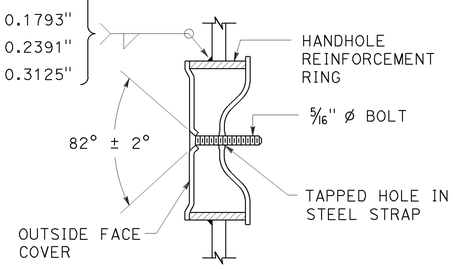

TAMPER RESISTANT HANDHOLE COVER
DETAIL B

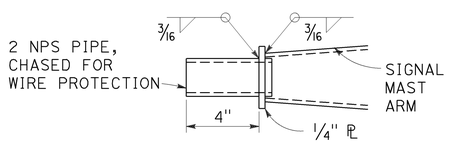

TIP TENON
DETAIL TL

This detail supersedes Detail S when so designated

WELD SIZE	WALL THICKNESS
⅛"	0.1196"
3/16"	0.1793"
¼"	0.2391"

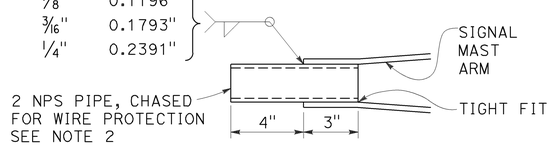

TIP TENON
DETAIL TS

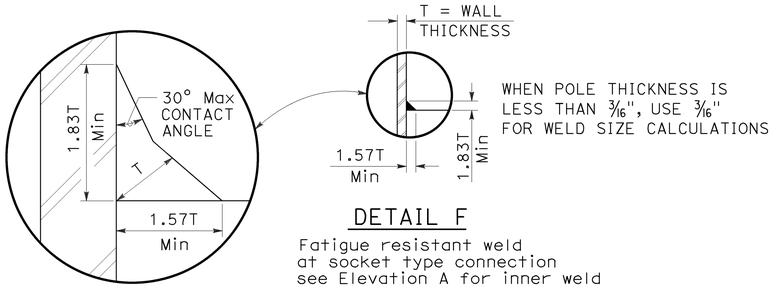

DETAIL F

Fatigue resistant weld at socket type connection see Elevation A for inner weld

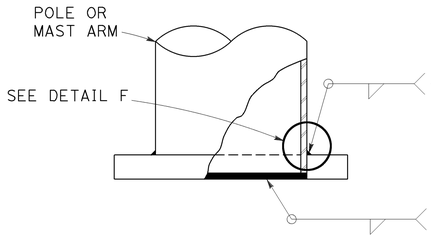

WELD SIZE	WALL THICKNESS
¼"	0.1196"
5/16"	0.1793"
⅜"	0.2391"
7/16"	0.3125"

⅛"	0.1196"
3/16"	0.1793"
¼"	0.2391"
5/16"	0.3125"

ELEVATION A

STATE OF CALIFORNIA
DEPARTMENT OF TRANSPORTATION

ELECTRICAL SYSTEMS (SIGNAL AND LIGHTING STANDARD, DETAIL No. 1)

NO SCALE

RSP ES-7M DATED OCTOBER 30, 2015 SUPERSEDES STANDARD PLAN ES-7M DATED MAY 20, 2011 - PAGE 474 OF THE STANDARD PLANS BOOK DATED 2010.

REVISED STANDARD PLAN RSP ES-7M

2010 REVISED STANDARD PLAN RSP ES-7M

9-1-15

Dist	COUNTY	ROUTE	POST MILES TOTAL PROJECT	SHEET No.	TOTAL SHEETS
12	Ora	5,55, 22,73	Var	102	105

REGISTERED CIVIL ENGINEER

July 19, 2013
PLANS APPROVAL DATE

Stanley P. Johnson
No. C57793
Exp. 3-31-14
CIVIL
STATE OF CALIFORNIA
REGISTERED PROFESSIONAL ENGINEER

THE STATE OF CALIFORNIA OR ITS OFFICERS OR AGENTS SHALL NOT BE RESPONSIBLE FOR THE ACCURACY OR COMPLETENESS OF SCANNED COPIES OF THIS PLAN SHEET.

TO ACCOMPANY PLANS DATED **1-19-2016**

STANDARD TYPE	SETBACK (DIMENSION A)
32	30'-0" (Min)
31	20'-0" (Min)
15, 15D, 15-SB, 21, 21D, 30	ARM LENGTH (Min)

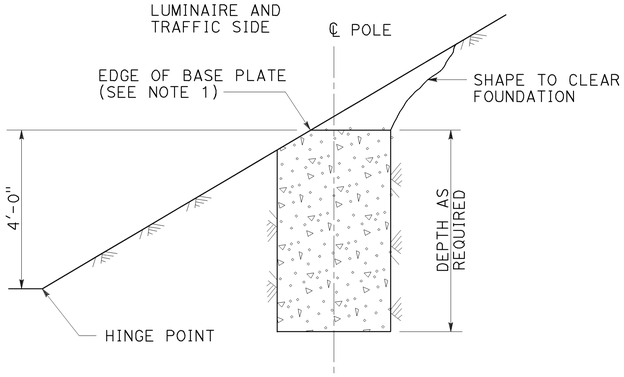

CUT SLOPES
STEEPER THAN 4:1,
LESS THAN 2:1
DETAIL A-1
See Note 2 and 3

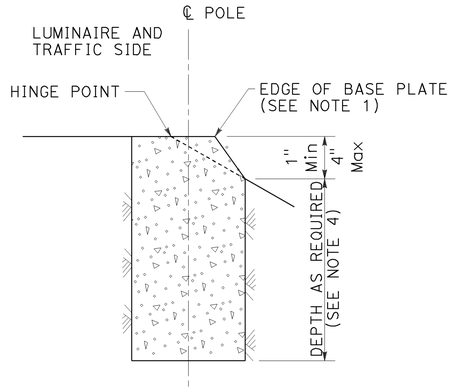

FILL SLOPES
STEEPER THAN 4:1,
LESS THAN 2:1
DETAIL A-2
See Note 2 and 3

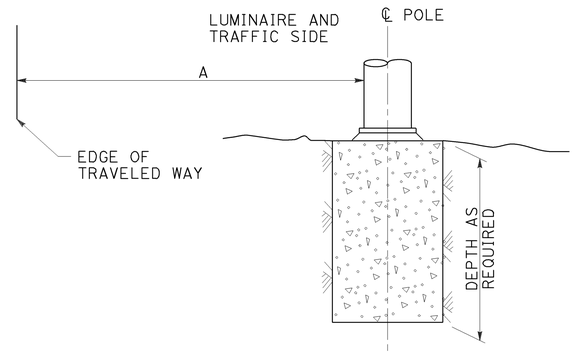

FLAT SECTIONS, CUT OR FILL SLOPES
4:1 OR FLATTER
DETAIL A-3
See Note 2

FOUNDATIONS ADJACENT TO ALL ROADWAYS EXCEPT
IN SIDEWALK, MEDIAN AND ISLAND AREAS
DETAIL A

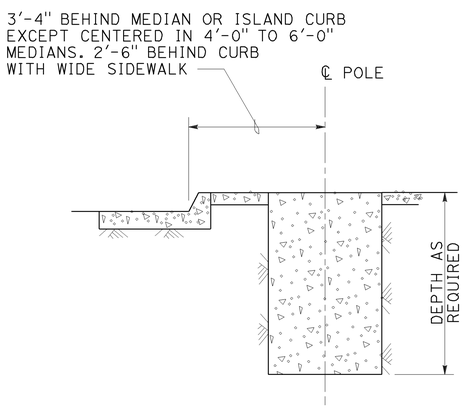

MEDIAN, ISLAND
OR WIDE SIDEWALK
DETAIL B-1
7' Wide and wider

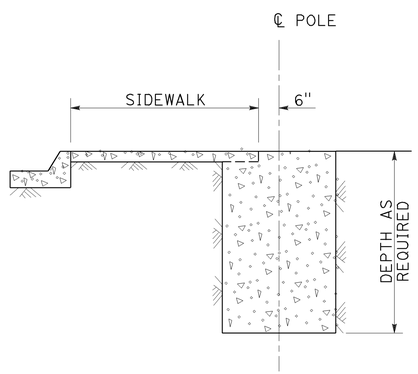

NARROW SIDEWALK
DETAIL B-2
Less than 7' wide

FOUNDATIONS IN SIDEWALK, MEDIAN AND ISLAND AREAS
DETAIL B

NOTES:

1. Where a portion of the foundation is above grade, the top edges shall have a 1" chamfer.
2. Slopes shall be horizontal to vertical ratio (Horizontal : Vertical).
3. Horizontal setbacks on cut and fill slopes steeper than 4:1 shall not exceed the distance shown for flat sections.
4. CIDH embedment depth shall be increased beyond standard depths by the diameter of the CIDH.

STATE OF CALIFORNIA
DEPARTMENT OF TRANSPORTATION

ELECTRICAL SYSTEMS (FOUNDATION INSTALLATIONS)

NO SCALE

RSP ES-11 DATED JULY 19, 2013 SUPERSEDES STANDARD PLAN ES-11
DATED MAY 20, 2011 - PAGE 488 OF THE STANDARD PLANS BOOK DATED 2010.

REVISED STANDARD PLAN RSP ES-11

2010 REVISED STANDARD PLAN RSP ES-11

7-9-13

Dist	COUNTY	ROUTE	POST MILES TOTAL PROJECT	SHEET No.	TOTAL SHEETS
12	Ora	5,55, 22,73	Var	103	105

Theresa Gabriel
REGISTERED ELECTRICAL ENGINEER

October 30, 2015
PLANS APPROVAL DATE

REGISTERED PROFESSIONAL ENGINEER
Theresa Aziz Gabriel
No. E15129
Exp. 6-30-16
ELECTRICAL
STATE OF CALIFORNIA

THE STATE OF CALIFORNIA OR ITS OFFICERS OR AGENTS SHALL NOT BE RESPONSIBLE FOR THE ACCURACY OR COMPLETENESS OF SCANNED COPIES OF THIS PLAN SHEET.

TO ACCOMPANY PLANS DATED 1-19-2016

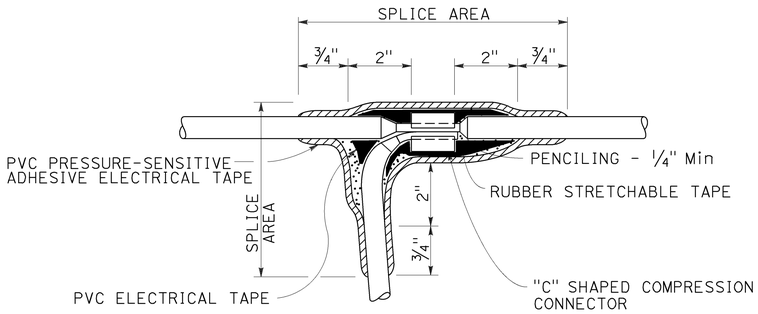

TYPE C SPLICE

See Note 3

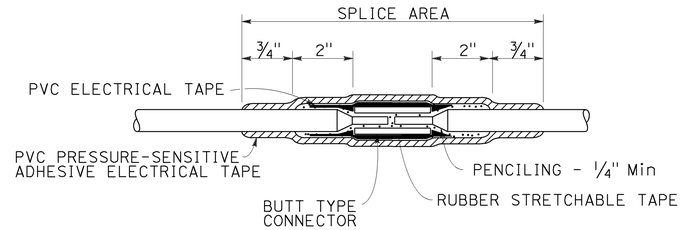

TYPE S SPLICE

See Note 4

NOTES:

1. Dimensions are minimum.
2. Rubber tapes shall be rolled after application.
3. Between 1 free-end and 1 through conductor.
4. Between 2 free-end conductors.
5. Between 3 free-end conductors.

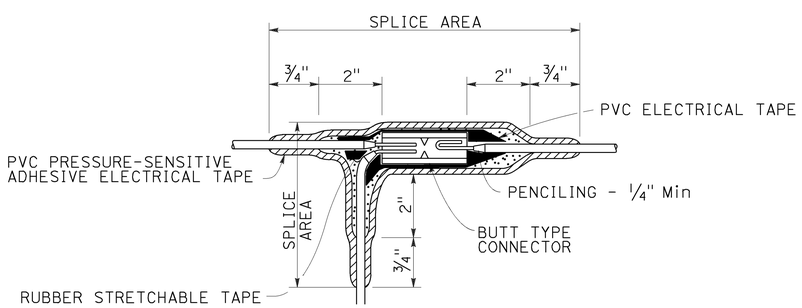

TYPE ST SPLICE

See Note 5

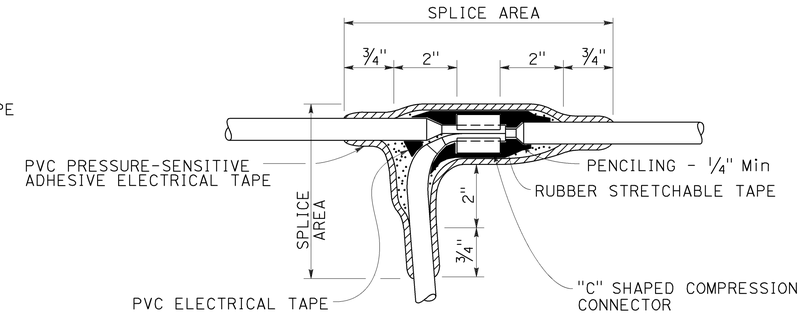

TYPE T SPLICE

See Note 5

STATE OF CALIFORNIA
DEPARTMENT OF TRANSPORTATION

ELECTRICAL SYSTEMS (SPLICING DETAILS)

NO SCALE

RSP ES-13A DATED OCTOBER 30, 2015 SUPERSEDES STANDARD PLAN ES-13A DATED MAY 20, 2011 - PAGE 491 OF THE STANDARD PLANS BOOK DATED 2010.

REVISED STANDARD PLAN RSP ES-13A

2010 REVISED STANDARD PLAN RSP ES-13A

9-28-15

DIST	COUNTY	ROUTE	POST MILES TOTAL PROJECT	SHEET No.	TOTAL SHEETS
12	Ora	5, 22, 55.73	Var	104	105

Charles Lomicka 07-15-15
REGISTERED CIVIL ENGINEER DATE

01-19-2016
PLANS APPROVAL DATE

REGISTERED PROFESSIONAL ENGINEER CHARLES LOMICKA No. C 71172 Exp. 06-30-17 CIVIL STATE OF CALIFORNIA

The State of California or its officers or agents shall not be responsible for the accuracy or completeness of electronic copies of this plan sheet.

JOINT SEAL TABLE

LOCATION	MINIMUM "MR" (INCHES)	Approx LENGTH (FEET)	Approx DEPTH TO CLEAN Exp JOINT (INCHES)	EXISTING WATERSTOP
Abut 1	1	219	12	NO
Abut 4	1	216	12	NO

DECK REPAIR TABLE

BRIDGE NUMBER	TOTAL DECK AREA (sqft)	APPROXIMATE AREA DAMAGED (percent)	APPROXIMATE DEPTH (inches)
55-0235	30,930	1	3

LOCATION OF REPAIR TO BE DETERMINED BY THE ENGINEER.

STANDARD PLANS DATED 2010

A10A	ABBREVIATIONS (SHEET 1 OF 2)
RSP A10B	ABBREVIATIONS (SHEET 2 OF 2)
A10C	LINES AND SYMBOLS (SHEET 1 OF 3)
A10D	LINES AND SYMBOLS (SHEET 2 OF 3)
A10E	LINES AND SYMBOLS (SHEET 3 OF 3)
B6-21	JOINT SEALS (MAXIMUM MOVEMENT RATING = 2")

STANDARD PLAN SHEET NO.

DETAIL NO.

QUANTITIES

RAPID SETTING CONCRETE (PATCH)	77	CF
REMOVE UNSOUND CONCRETE	77	CF
PREPARE CONCRETE BRIDGE DECK SURFACE	30,930	SQFT
FURNISH POLYESTER CONCRETE OVERLAY	1,933	CF
PLACE POLYESTER CONCRETE OVERLAY	30,930	SQFT
GRIND EXISTING BRIDGE DECK	1,450	SQYD
CLEAN EXPANSION JOINT	435	LF
JOINT SEAL (MR 1")	435	LF

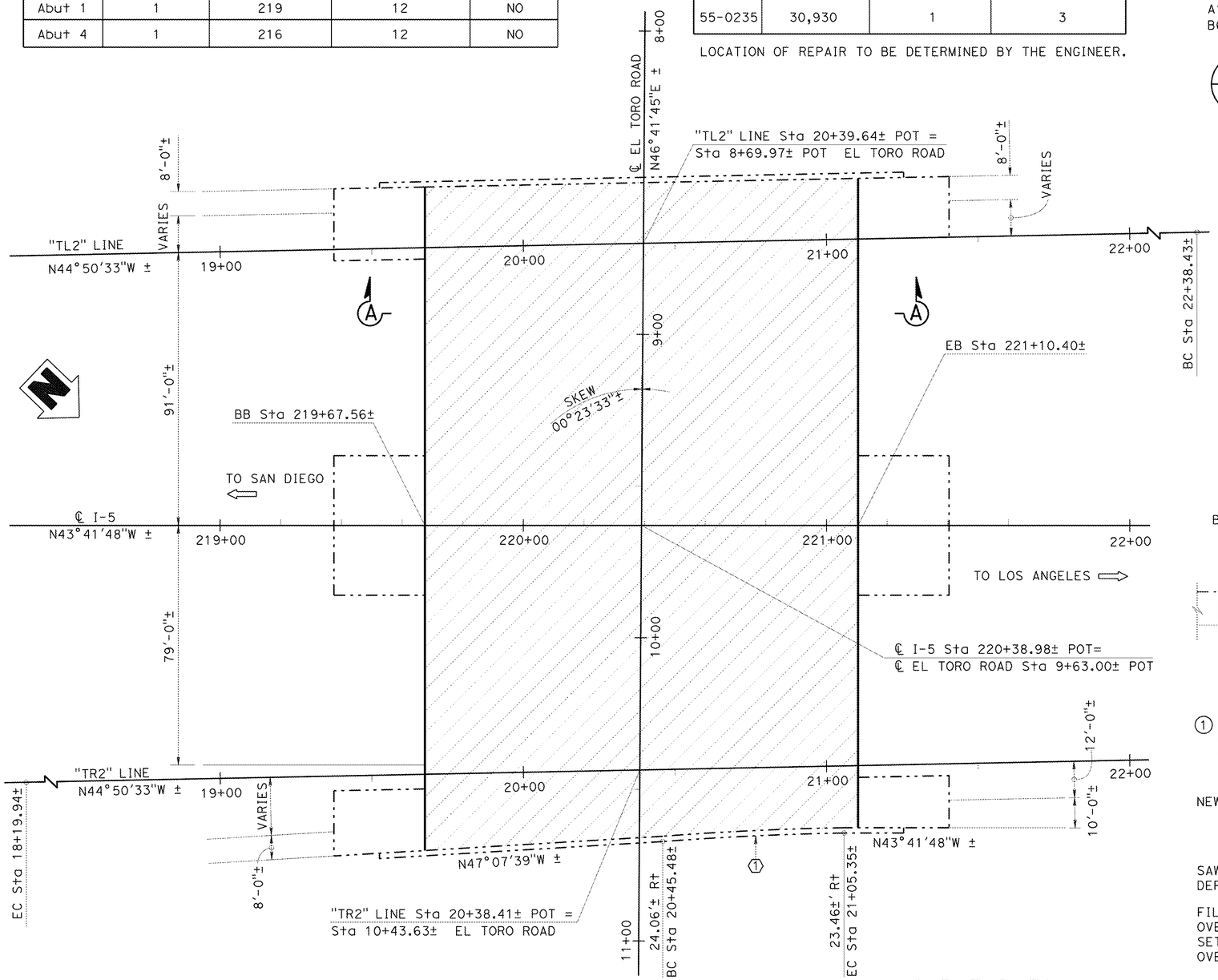

NOTE:
THE CONTRACTOR MUST VERIFY ALL CONTROLLING FIELD DIMENSIONS BEFORE ORDERING OR FABRICATING ANY MATERIAL.

PLAN
1" = 20'

CURVE DATA

No.	R	Δ	T	L
1	1000.00'±	03°25'51"±	30.17'±	60.32'±

INDEX TO PLANS

NO.	SHEET NAME
1	GENERAL PLAN NO. 1
2	GENERAL PLAN NO. 2

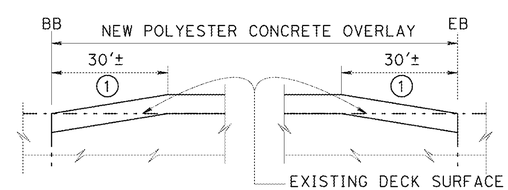

SECTION A-A
NO SCALE

1 LIMITS OF GRIND EXISTING BRIDGE DECK
0 INCH Min TO 3/4 INCH MAXIMUM FULL WIDTH.
GRIND FLUSH TO CONFORM WITH EXISTING PROFILE.

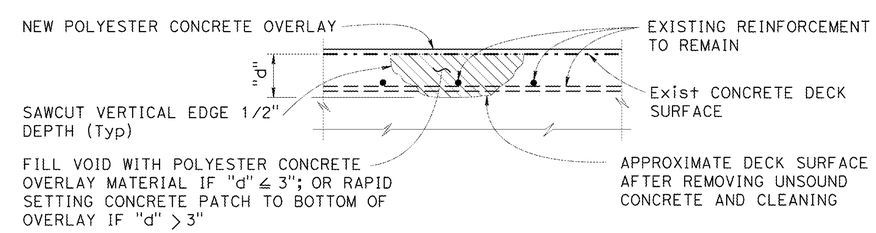

DECK REPAIR DETAIL-OVERLAY
NO SCALE

LOCATION WILL BE DETERMINED BY THE ENGINEER. REINFORCEMENT MAY BE ENCOUNTERED DURING DECK CONCRETE REMOVAL AND IS TO REMAIN UNDAMAGED.

LEGEND:

- Direction of traffic
- Indicates Existing structure
- Indicates limits of remove unsound concrete, place rapid setting concrete patch, prepare concrete bridge deck surface, and place ¾" polyester concrete overlay. See "DECK REPAIR DETAIL -OVERLAY" for unsound concrete repair.
- Indicates location of clean expansion joint and joint seal (MR=1")

B. GUNTER
DESIGN ENGINEER

	BY	CHECKED
DESIGN	C. Lomicka	R. Wang
DETAILS	H. Iniguez / H. Mahboobi	R. Wang
QUANTITIES	C. Lomicka	R. Wang

LOAD & RESISTANCE FACTOR DESIGN — LIVE LOADING: HL93 W/"LOW-BOY"; PERMIT DESIGN VEHICLE
LAYOUT — BY C. Lomicka — CHECKED R. Wang
SPECIFICATIONS — BY V. Renganathan — PLANS AND SPECS COMPARED V. Renganathan

ORIGINAL SCALE IN INCHES FOR REDUCED PLANS 0 1 2 3

STATE OF CALIFORNIA
DEPARTMENT OF TRANSPORTATION

DIVISION OF ENGINEERING SERVICES
STRUCTURE DESIGN
DESIGN BRANCH 19

BRIDGE NO. 55-0235
POST MILE 18.7

EL TORO ROAD UC (DECK REPAIR)
GENERAL PLAN NO. 1

UNIT: 3621
PROJECT NUMBER & PHASE: 1213000098 - 1 CONTRACT NO.: 12-0N0701

DISREGARD PRINTS BEARING EARLIER REVISION DATES — REVISION DATES 12-08-14 07-01-15 08-08-15

SHEET 1 OF 2

STRUCTURES DESIGN GENERAL PLAN SHEET (ENGLISH) (REV 09-01-10)

FILE => 55-0235gl-g-gp-01.dgn

DIST	COUNTY	ROUTE	POST MILES TOTAL PROJECT	SHEET No.	TOTAL SHEETS
12	Ora	5, 22, 55, 73	Var	105	105

Charles Lomicka 07-15-15
REGISTERED CIVIL ENGINEER DATE

REGISTERED PROFESSIONAL ENGINEER CHARLES LOMICKA No. C 71172 Exp. 06-30-17 CIVIL STATE OF CALIFORNIA

01-19-2016
PLANS APPROVAL DATE

The State of California or its officers or agents shall not be responsible for the accuracy or completeness of electronic copies of this plan sheet.

NOTE:

1. Limits of High Friction Bridge Deck Seal from station 93+84.58 to 116+42.29
2. All existing joint seals to be protected in place.

QUANTITIES

HIGH FRICTION BRIDGE DECK SEAL 10,025 SQYD

LEGEND:

⇨ Direction of traffic

— - - — Indicates Existing structure

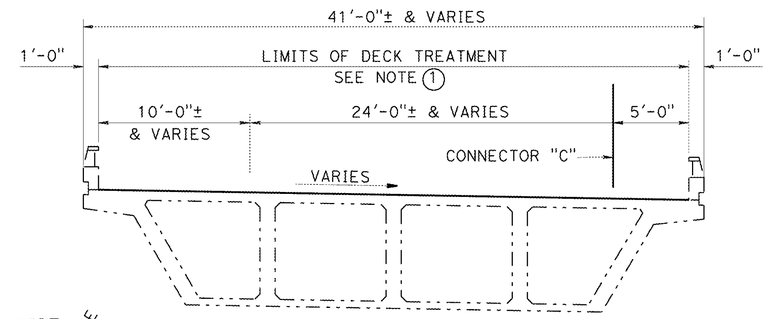

TYPICAL SECTION

1" = 5'-0"

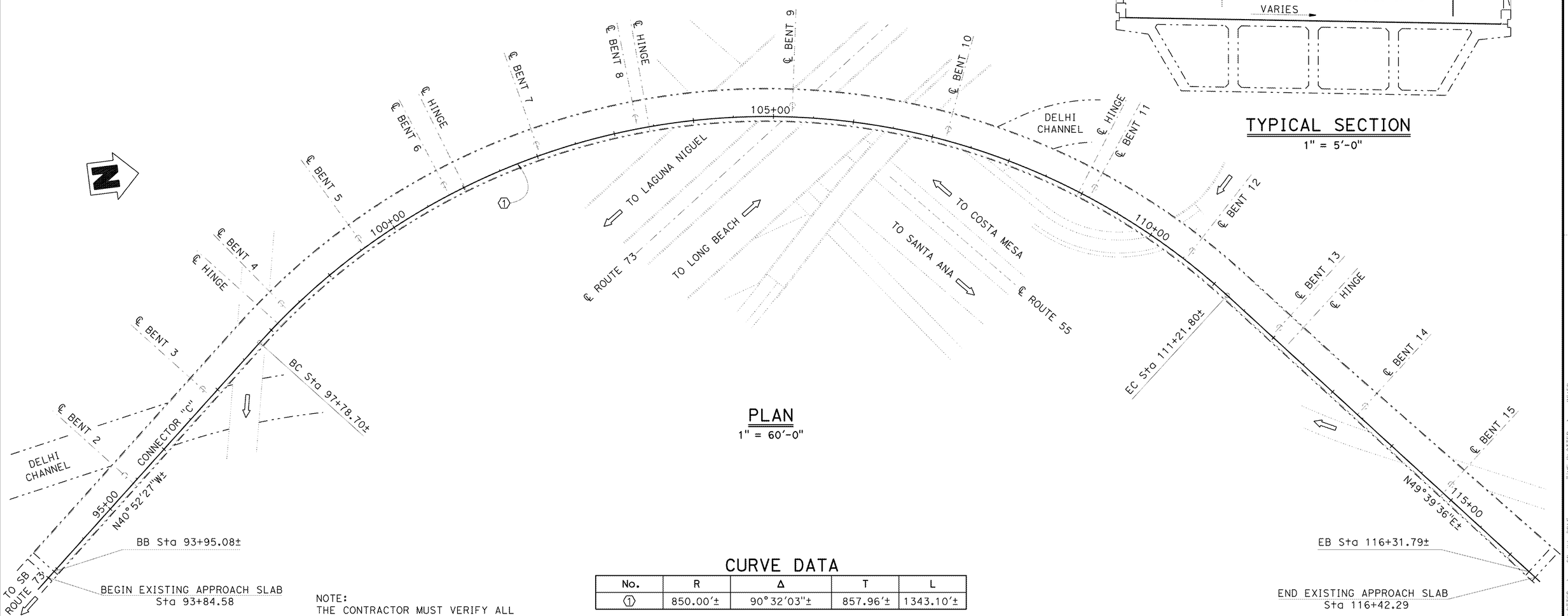

PLAN

1" = 60'-0"

CURVE DATA

No.	R	Δ	T	L
1	850.00'±	90°32'03"±	857.96'±	1343.10'±

NOTE:
THE CONTRACTOR MUST VERIFY ALL CONTROLLING FIELD DIMENSIONS BEFORE ORDERING OR FABRICATING ANY MATERIAL.

	BY	CHECKED
DESIGN	C. Lomicka	R. Wang
DETAILS	H. Iniguez / H. Mahboobi	R. Wang
QUANTITIES	C. Lomicka	R. Wang

STATE OF CALIFORNIA
DEPARTMENT OF TRANSPORTATION

DIVISION OF ENGINEERING SERVICES
STRUCTURE DESIGN
DESIGN BRANCH 19

BRIDGE NO. 55-0538F
POST MILE R4.74

S55-S73 CONNECTOR OC (DECK REPAIR)

GENERAL PLAN NO. 2

STRUCTURES DESIGN DETAIL SHEET (ENGLISH) (REV. 09-01-10)

ORIGINAL SCALE IN INCHES FOR REDUCED PLANS 0 1 2 3

UNIT: 3621
PROJECT NUMBER & PHASE: 1213000098 - 1 CONTRACT NO.: 12-0N0701

DISREGARD PRINTS BEARING EARLIER REVISION DATES

REVISION DATES 12-15-14 03-09-15 07-01-15

SHEET 2 OF 2