Equivalent Number of Live Load Lanes for CT-Abut Input (Approximate Solution)

The CT-Abut program assumes a uniform distribution of live load reaction forces along the abutment in the transverse direction, therefore localized effects associated with a concentration of live load reaction forces at different locations on the abutment need to be considered in analysis. An equivalent number of live load lanes can be calculated based on a 45-degree distribution from the height of the abutment wall at the deck to the top of the footing as shown in Figure 1. When calculating equivalent number of live load lanes, multiple presence factor (*MPF*) is multiplied by number of whole lanes that can be accommodated on the bridge. The equivalent number of lanes will be calculated as:

$$\text{Equivalent number of lanes } (N) = W * n * MPF / b_n$$

Where:

W = length of abutment along the skew

n = number of whole lanes that can be accommodated on the bridge

b_n = effective live load distribution width at the top of the footing

MPF = multiple presence factor

Per AASHTO-CA BDS 3.6.1.1.1, the maximum number of design lanes that can be placed on the bridge should be determined by taking the integer part of the ratio $w/12$, where w is the clear roadway width in feet between curbs and /or barriers.

Therefore $$n_{max} = \{W * \cos(\alpha) - 2 \times \text{edge distance}\}/12$$

Roadway widths from 20 to 24 ft shall have two design lanes, each equal to one-half the roadway width.

Edge distance is the width of the barrier, however it can be assumed zero as the designer may need to consider future widening per AASHTO 2.3.2.1 and use edge of deck (EOD) to EOD.

Effective live load distribution width at the top of the footing can be written as:

$$b_n = a_n + h \times \tan\theta \leq W$$

Where, a_n is the effective live load distribution width at the deck elevation:

$$a_n = \{(8 + \text{edge distance}) + (n - 1) \times 12\}/\cos(\alpha)$$

h = abutment height (deck to top of the footing)

θ = angle of the load distribution (can be assumed 45 degree)

α = skew angle

Equivalent number of lanes (N) is calculated for different values of n varying from 1 to n_{max}. The maximum value of N is used to calculate CT-Abut design and permit vehicular live loads.

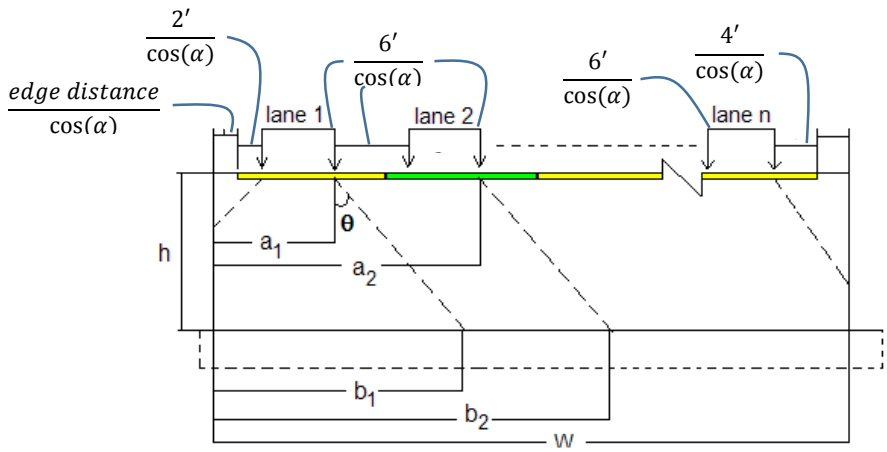

Figure 1: Elevation View of Abutment along the Skew

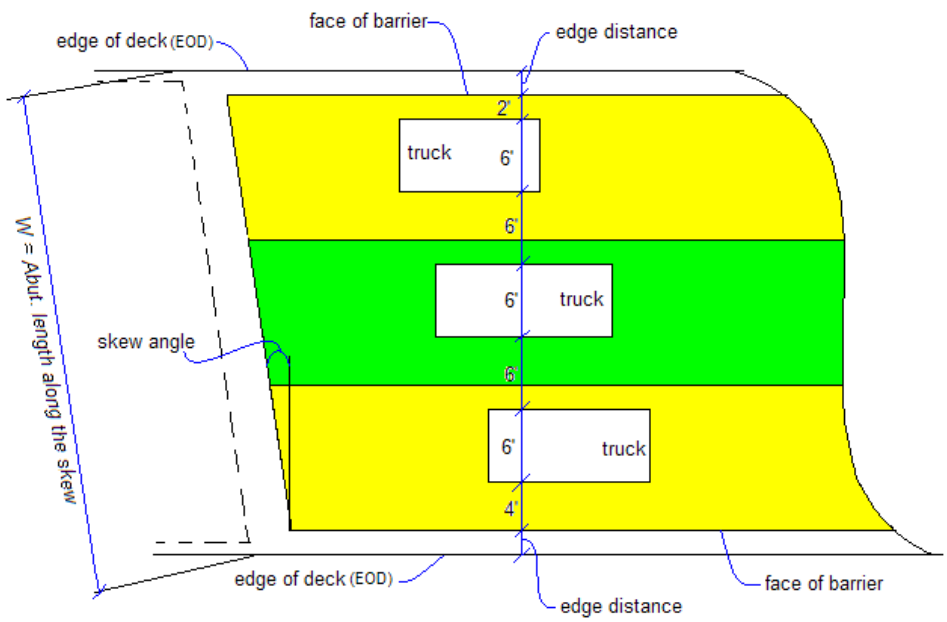

Figure 2- Plan View of Skew Bridge

<u>Example Calculation of the equivalent number of live load lanes</u>

Given:

Length of abutment along the skew, W = 62.6 ft,

Edge distance =1 ft

Skew angle, $\alpha = 20^0$

Height of the abutment, h = 14.25 ft

HL-93 design vehicular live load from CT Bridge (one lane), no impact = 98.23 kips

P15 permit vehicular live load from CT Bridge (one lane), no impact = 184.01 kips

Solution:

Maximum number of whole lanes: $n = \{W \times \cos(\alpha) - 2 \times \text{edge distance}\}/12$

$$n = \{62.6 \times \cos(20°) - 2 \times 1)\}/12$$

$$n = 4.74\ lanes$$

Using only the integer part: $n = 4\ lanes$

Since *MPF* depends on the number of lanes, the designer needs to calculate equivalent number of lanes for each case (one, two, three lanes) from the following equation:

$$a_n = \{(8 + \text{edge distance}) + (n - 1) * 12\}/\cos(\alpha)$$

For example: For two live load lanes

$$a_2 = \{(8 + 1) + (2 - 1) \times 12\}/\cos(20°) = 22.35 \text{ ft}$$

Effective width at top of the footing can be written as:

$$b_n = a_n + h \times \tan\theta \leq W$$

For two lanes on the deck:

$$b_2 = 22.35 + 14.25 \times \tan 45° = 36.6 \text{ ft}$$

The largest width is obtained for four lanes: $b_4 = W = 62.6$ ft

Summary of calculation of a_n and b_n is shown in the table below.

Number of lane (s) on superstructure, *n*	Effective live load distribution width at the abutment seat elevation, a_n (ft)	Effective live load distribution width at the top of footing, b_n (ft)
1	$\frac{\{(8+1)+(1-1)\times 12\}}{\cos(20°)} = 9.58$	$9.58 + 14.25 \times \tan 45° = 23.83$
2	$\frac{\{(8+1)+(2-1)\times 12\}}{\cos(20°)} = 22.35$	$22.35 + 14.25 \times \tan 45° = 36.6$
3	$\frac{\{(8+1)+(3-1)\times 12\}}{\cos(20°)} = 35.12$	$35.12 + 14.25 \times \tan 45° = 49.37$
4	$\frac{\{(8+1)+(4-1)\times 12\}}{\cos(20°)} = 47.89$	$47.89 + 14.25 \times \tan 45° = 62.14$

From those effective widths, the equivalent # of live load lanes is calculated using the equation $MPF \times n \times W/b_n$ as shown in table below.

For design live load lanes

Number of lane (s) on superstructure, *n*	*MPF*	Equivalent number of design live load lanes, *N*
1	1.2	$1.2 \times 1 \times {}^{62.6}/_{23.83} = 3.15$
2	1.0	$1.0 \times 2 \times {}^{62.6}/_{36.60} = 3.42$
3	0.85	$0.85 \times 3 \times {}^{62.6}/_{49.37} = 3.23$
4	0.65	$0.65 \times 4 \times {}^{62.6}/_{62.14} = 2.62$

In this example, two lanes results in the largest number of equivalent lanes. Therefore equivalent number of live load lanes for the design vehicle will be 3.42 lanes.

The same method is used for the P truck. However the designer should consider only one or two lanes of P truck with *MPF* of one used for both cases.

For permit truck live load lanes

Number of lane (s) on superstructure, n	*MPF*	Equivalent number of permit truck live load lanes, *N*
1	1.0	$1.0 \times 1 \times {}^{62.6}/_{23.83} = 2.63$
2	1.0	$1.0 \times 2 \times {}^{62.6}/_{36.60} = 3.42$

Equivalent number of live load lanes for P truck is controlled by two lanes (side by side) and it is equal to 3.42 lanes.

Vehicular live loads for CT Abut:

LRFD design vehicular live load (LL_{HL93}) for CT-Abut:

$$\boldsymbol{LL_{HL93}} = \text{equivalent number of lanes} * design\ vehicular\ load\ per\ lane$$

$$LL_{HL93} = 3.42\ lane * 98.23\ kips/lane = 335.95\ kips$$

LRFD permit vehicular live load (LL_{Permit}) for CT-Abut:

$$\boldsymbol{LL_{Permit}} = \text{equivalent number of lanes} * permit\ truck\ load\ per\ lane$$

$$= 3.42\ lane * 184.01\ kips/lane = 629.31\ kips$$