The following pages of *Bridge Design Details*, Section 7, have been reviewed in February 1990 and found to be valid and appropriate for continued use:

Page	*Date*	*Title*
7-20	January 1974	Pier Column
7-36	December 1974	Web Wall for Pile Bents

These pages will be updated from time-to-time when significant changes in the technology occur.

Floyd L. Mellon

Guy D. Mancarti

TPJ:jgf

BENT SHEET CHECK LIST

1. Plan

a. Place at top left side of sheet, oriented looking ahead on stationing or ahead on bent numbering.
b. Scale ¼" = 1'-0" usually.
c. Do not show layout information that is shown on Foundation Plan.
d. If main reinforcement cannot be shown in Plan, show in a Plan of Cap Reinforcement diagram.
e. Check List:

1. Show North arrow here or below on Footing Plan.
2. Show reference lines (usually centerline column or centerline between columns) parallel to girders for bar cutoffs and placement.
3. Show a few stirrups at ends of cap on skews and partial stirrups at round, octagonal columns, etc. (7-45)
4. Show drains, if used, and detail reinforcement around drains.
5. Standard Cap Notes (similar to Deck Reinforcing Notes).
6. Show utility opening.

2. Elevation

a. Place below Plan. Project from face of bent cap for skews.
b. Same scale as Plan. Usually ¼" = 1'-0".
c. Girders need not be shown.
d. Check List:

1. Show utility openings.
2. Show deck overhang reinforcement.
3. Show drain and drain pipe if required.
4. Show all footings.
5. Show some column bars and stirrups or spirals. (7-31.3)
6. Show a few footing reinforcing bars to identify location of bars in mat. (7-21)
7. Show column geometrics here or in a diagram for "architectural columns". (7-30)
8. Seal course note if needed. (7-20.1)
9. Show some piles.
10. Show cap stirrup spacing taken along centerline bent with special stirrup spacing at column.
11. Identify concrete types if not shown on "Girder Layout" or "Typical Section" sheet.
12. Show location of Sections.
13. Show footing elevations only if they are not shown on Foundation Plan.

3. Footing Plan

a. Show below "Elevation" if room is available.
b. Scale ¼" = 1'-0". Reinforcing pattern may be shown in this view at this scale.
c. Show all footings, but do not re-detail similar footings; use notes.
d. Show complete pile layouts. Locate from centerline column = centerline footing and centerline bent.
e. Do not repeat alignment given on Foundation Plan.

4. Cap Section (7-41)

a. Scale ⅜" = 1'-0" minimum; ½" = 1'-0" preferred.
b. Show maximum main reinforcing.
c. Show clearances to main cap reinforcing. Use outside deformation diameter to assure that deck clearance can be maintained. See page 13-10 for rebar dimensions.

5. Column Section

a. Same scale as Cap Section.
b. Several sections may be needed for architectural columns and variable bar patterns.

PIER COLUMN

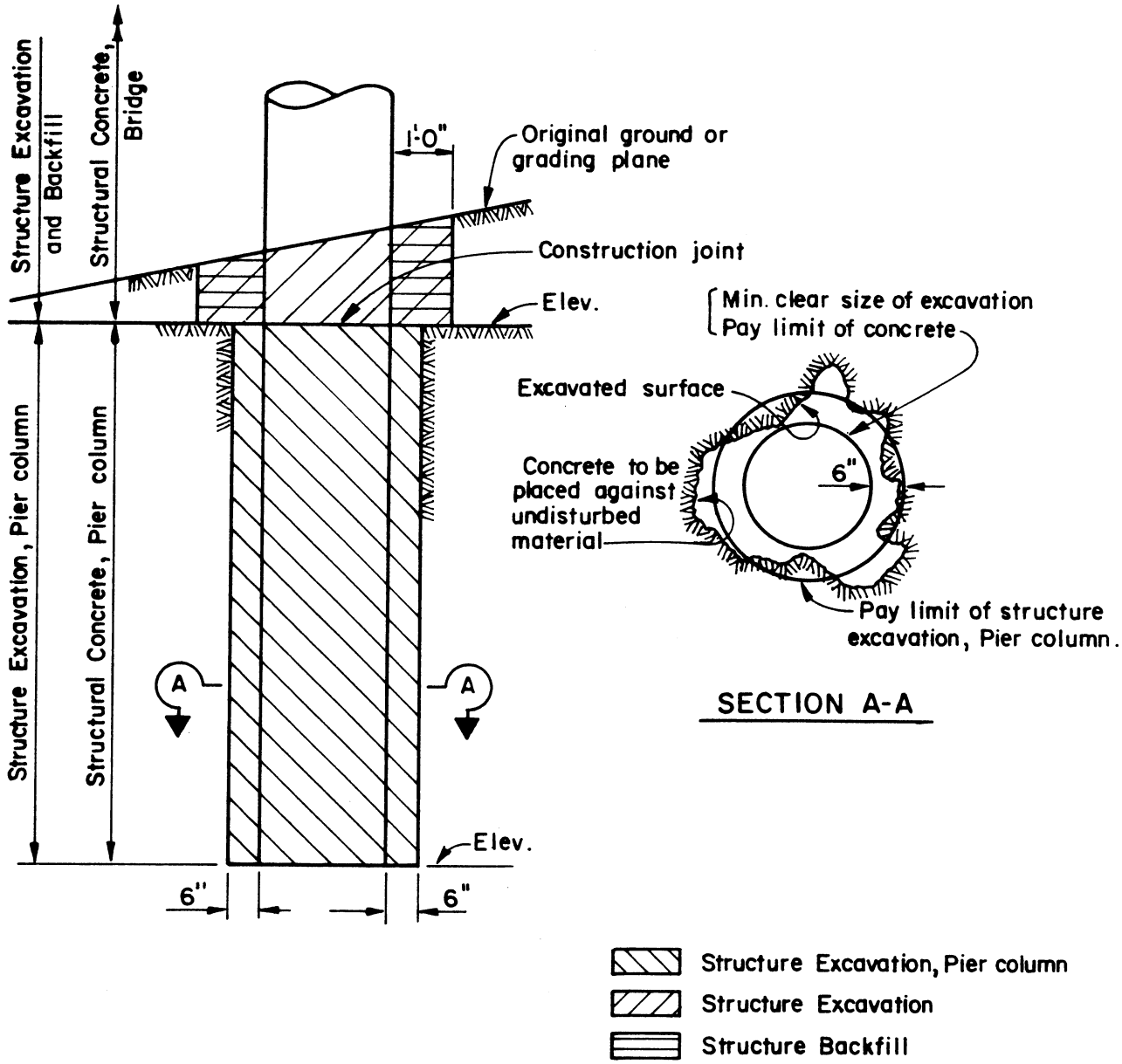

NOTE TO DESIGNERS:

1. Use Pier Column in hard material where conventional CIDH methods are not feasable.
2. Elevations shown are upper and lower limits of hard material excavation.
3. Construction joint to be placed 1' min. below finished grade.

Footing With Seal Course

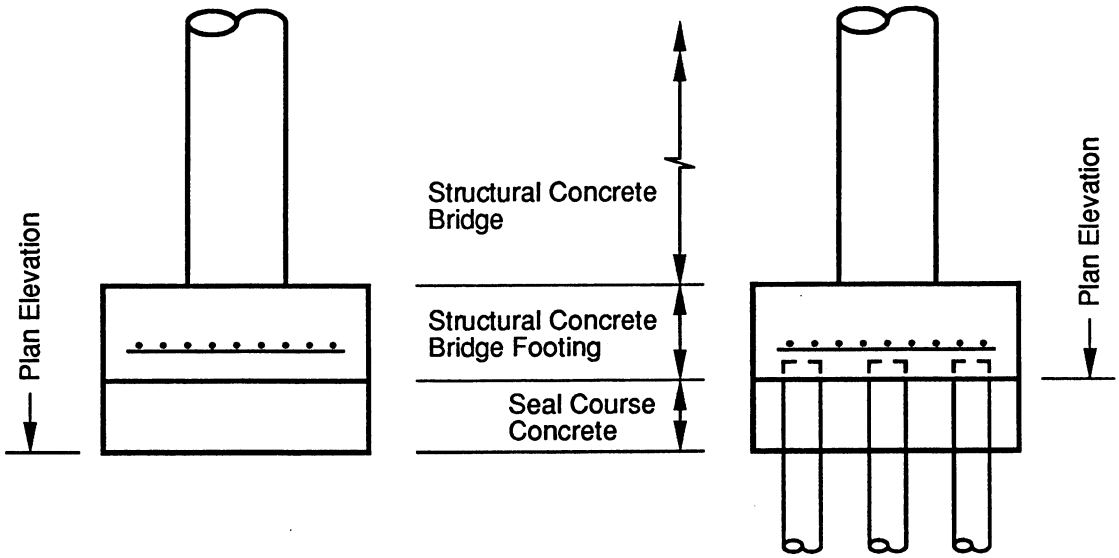

Spread Footing

NOTE: Seal course to be placed only when ordered by the Engineer. Estimated quantities involved are based on the seal thickness shown. The thickness to be used will be determined in the field by the Engineer. When seal is not used, the bottom of the reinforced footing shall be placed at the elevation shown for bottom of seal.

Pile Footing

NOTE: Seal course to be placed only when ordered by the Engineer. Estimated quantities involved are based on the seal thickness shown. The thickness to be used will be determined in the field by the Engineer. When seal is not used, the bottom of the reinforced footing shall remain at the elevation shown.

Note to Designer:
When pile footings are subject to critical scour, placing Plan Elevation at bottom of seal course may be advisable.

Structure Excavation Type D

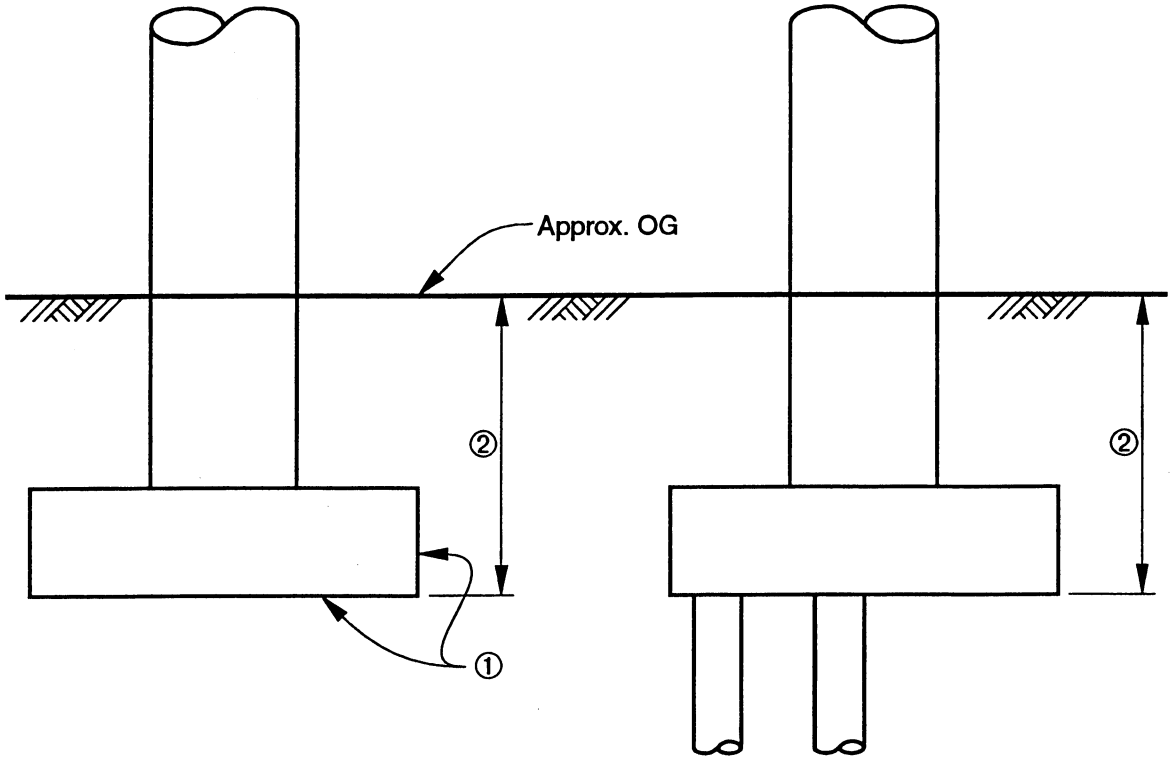

Spread Footing **Pile Footing**

① Place footing concrete against undisturbed material.
② Structure Excavation Type D (give location).

NOTE TO DESIGNERS: Use Structure Excavation Type D where wet conditions are possible but no seal course is shown. Reference Structure Excavation Type D on the plans by a note (i.e., Structure Excavation Type D @ Bent 3 only) or as delineated above. Pay limits are defined in the *Standard Specifications* and *Standard Plans*.

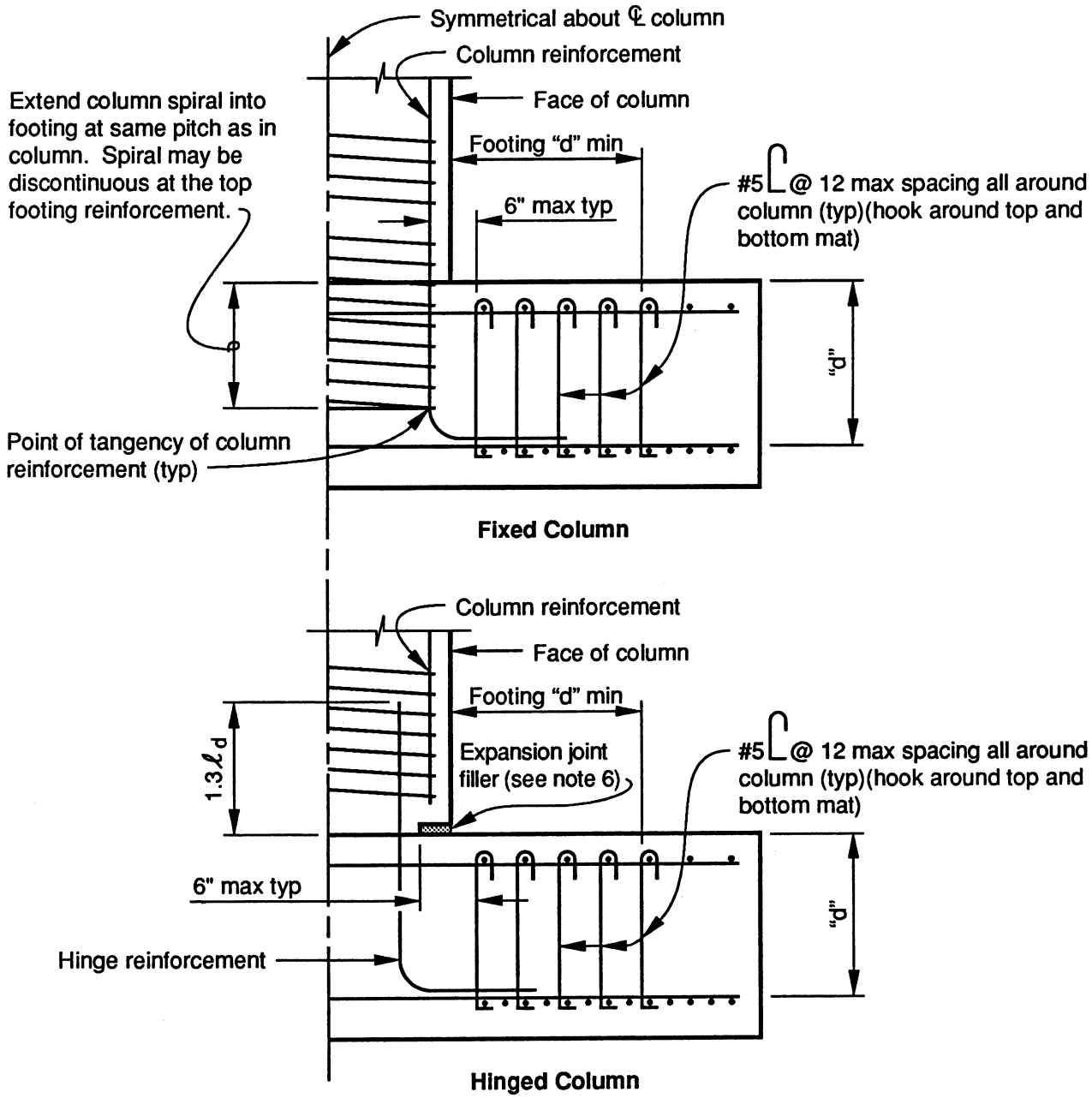

Footing Reinforcement

Notes to Designer:

1. #5 @ 12 is the minimum equivalent required, see BDS Article 4.4.7.3.
2. For minimum top of footing reinforcement requirements, see BDS Article 4.4.6.3.3.
3. For design requirements for column hinge, see BDS Article 8.16.4.5.
4. When hinge is used for oblong columns having overlapping spirals, hinge reinforcement must be detailed to clear the spirals.
5. Locations for permissible discontinuities in spiral reinforcing must be shown on the plans.
6. The thickness of the expansion joint filler should allow maximum column deflection without crushing the edge of the column concrete against the footing and should have a minimum thickness of ½".

Guidelines for Column Type Selection

The following pages contain Standard Architectural Columns with prismatic sections, with one-way flares and with two-way flares. These standard columns were developed to limit variations in dimensions for the different shapes and flares. The standards have enough variations so that one of the sections should be appropriate for practically any situation. However, there are certain shapes that are more adaptable to a greater number of conditions and their use is encouraged to increase column form re-use from project to project.

It is not intended that all columns conform exclusively to the standard column shapes. It is the intent that all designers are made aware that unique forms are expensive and that, in most cases, a pleasing appearance can be achieved at a minimum cost by utilizing a standard column shape. The column type selection is still a joint effort of the designer and the bridge architect. When the situation merits it, special columns should be used. However, in typical situations, greater effort should be made to utilize the more common shapes and sizes.

Forms for architectural columns with curvilinear surfaces are expensive. A new column form for a typical overcrossing may cost as much as $15,000 or around 5% of the total cost of the bridge. Obviously, if column forms can be reused from job to job the cost of construction can be significantly reduced.

The following guidelines are to promote uniformity in column type selection and to increase the re-utilizations of column forms:

1. The octagon and circle are suitable for most situations and are readily expanded into cross sections that are equally suitable. Spiral reinforcing cages, which are desirable for increased earthquake resistance, fit well in these cross sections.

2. The hexagon and rectangle are not as architecturally versatile and should be considered only for certain situations.

3. One-way flares generally provide sufficient architectural accent for most situations. Two-way flares should only be used in special situations where a stronger architectural impact is required.

4. Prismatic columns are very utilitarian and have a definite place in our designs. They are suitable for multi-column bents, bridges with low public exposure, highly industralized areas and locations, etc.

5. Architectural treatment of column surfaces such as tecturing, insets and fillets, do not have a very strong impact. Considerations of their use should be strongly evaluated and, in general, limited to areas where pedestrian and low speed vehicular densities are heavy.

6. Designers have frequently used two or more column sizes on one project. Keeping in mind the cost of producing a column form, the designers should recognize that greater economy might result from oversizing the smaller columns to allow re-use of the large column forms. Real economy is not based solely on the use of the least amount of materials.

Standard Architectural Columns
Prismatic

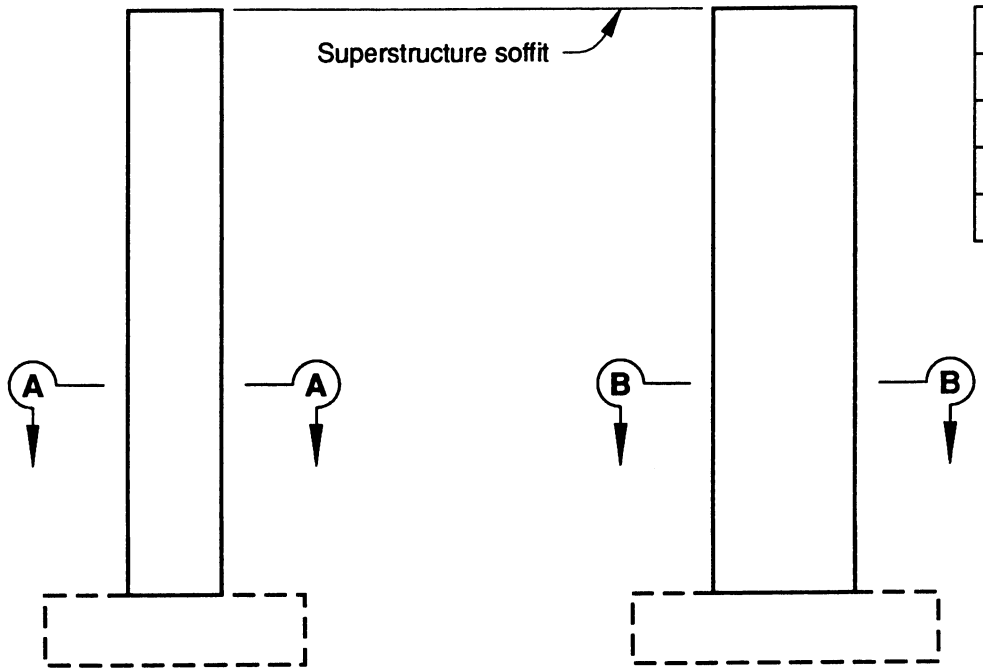

Column Type 1
Shaft t
4'
5'-6"
7'

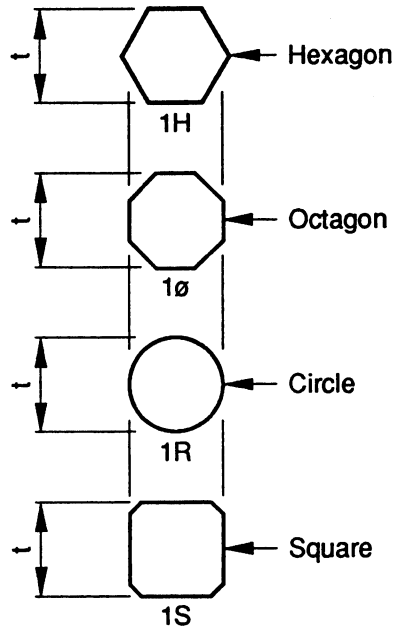

Section A-A
COLUMN TYPE 1

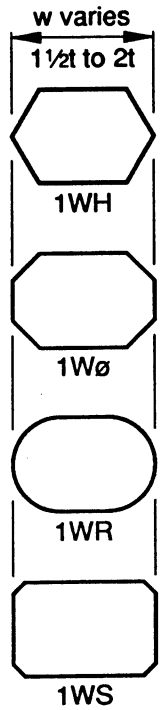

Section B-B
COLUMN TYPE 1W

Standard Architectural Columns
One Way Flare

Top section for 2H shown. Others similar except as noted.

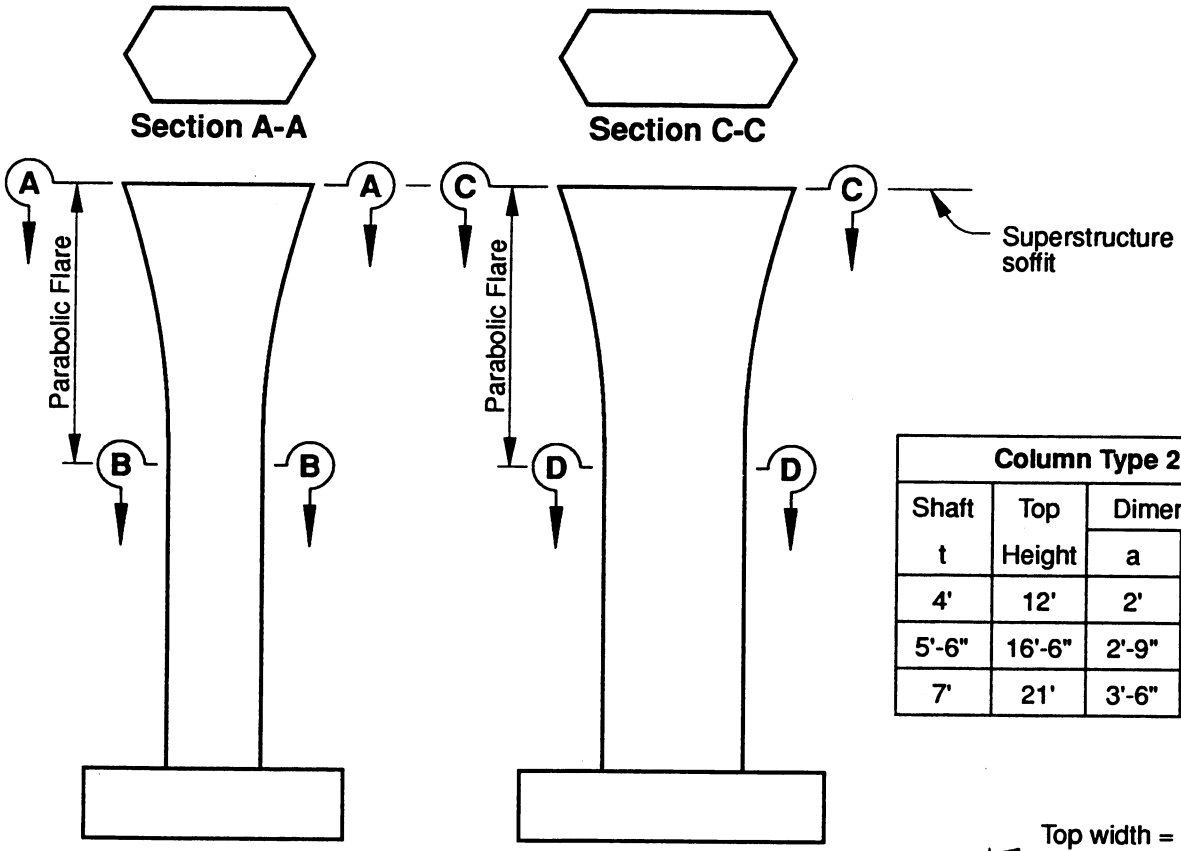

Column Type 2			
Shaft	Top	Dimensions	
t	Height	a	b
4'	12'	2'	6'
5'-6"	16'-6"	2'-9"	8'-3"
7'	21'	3'-6"	10'-6"

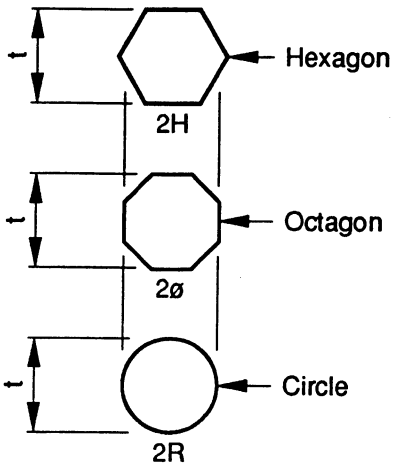

Section B-B
COLUMN TYPE 2

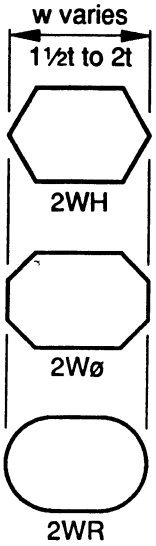

Section D-D
COLUMN TYPE 2W

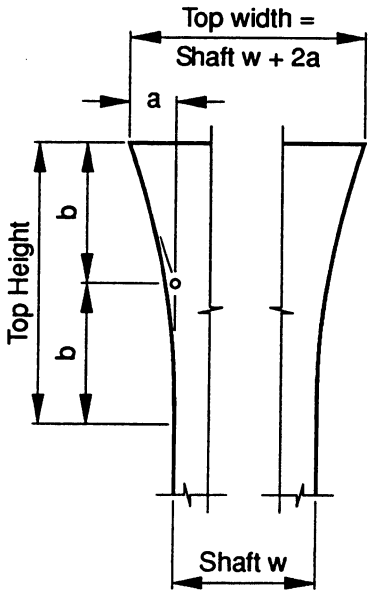

FLARE DETAILS

Standard Architectural Columns
Two Way Flare

Top section for 3H shown. Others similar except as noted.

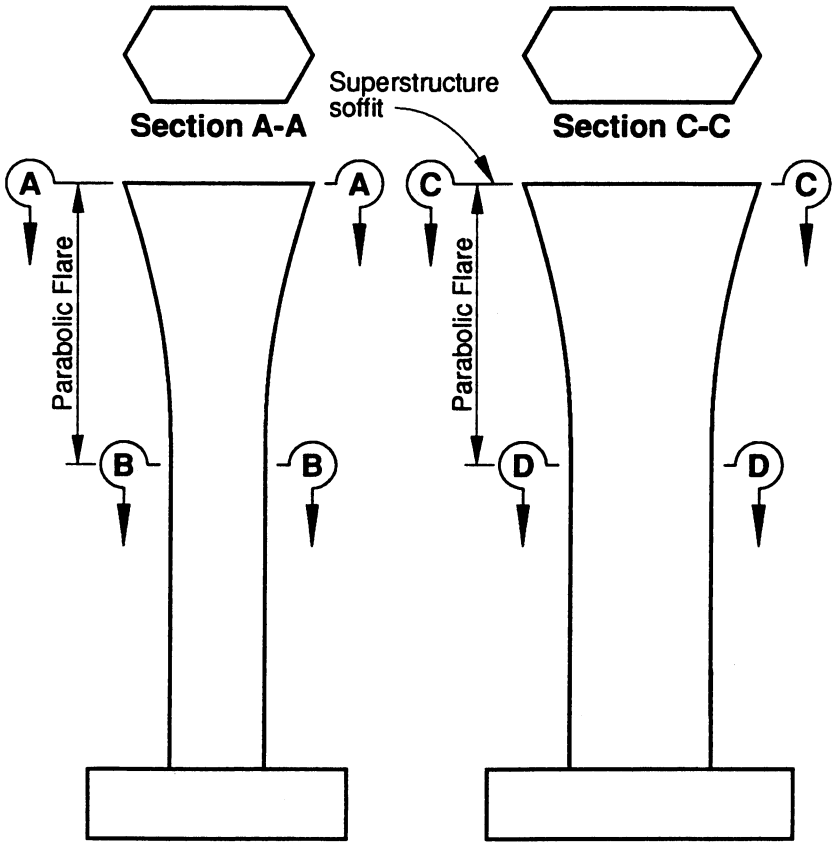

Column Type 3				
Shaft	Top	Dimensions		
t	Height	a	b	c
4'	12'	2'	6'	1'
5'-6"	16'-6"	2'-9"	8'-3"	1'-4½"
7'	21'	3'-6"	10'-6"	1'-9"

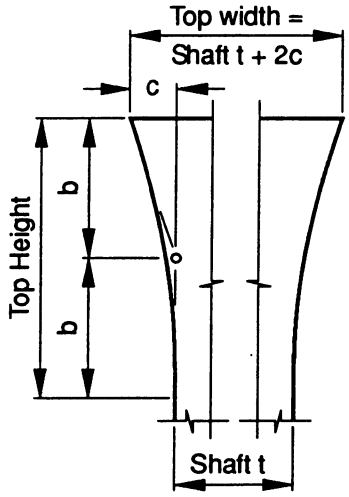

Side View

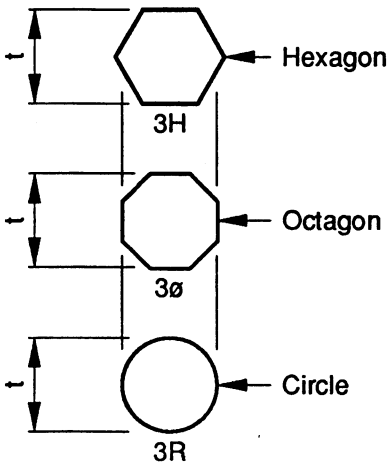

Section B-B
COLUMN TYPE 3

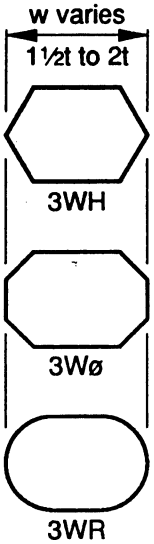

Section D-D
COLUMN TYPE 3W

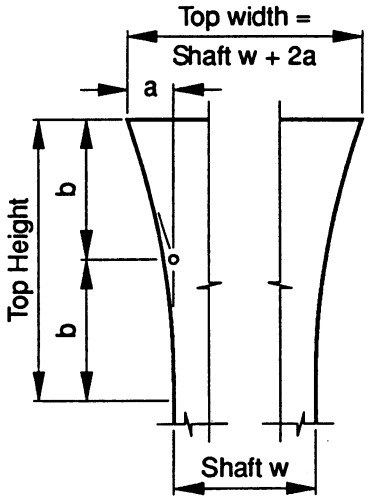

Front View
FLARE DETAILS

LARGE DIAMETER CIDH COLUMN REINFORCEMENT

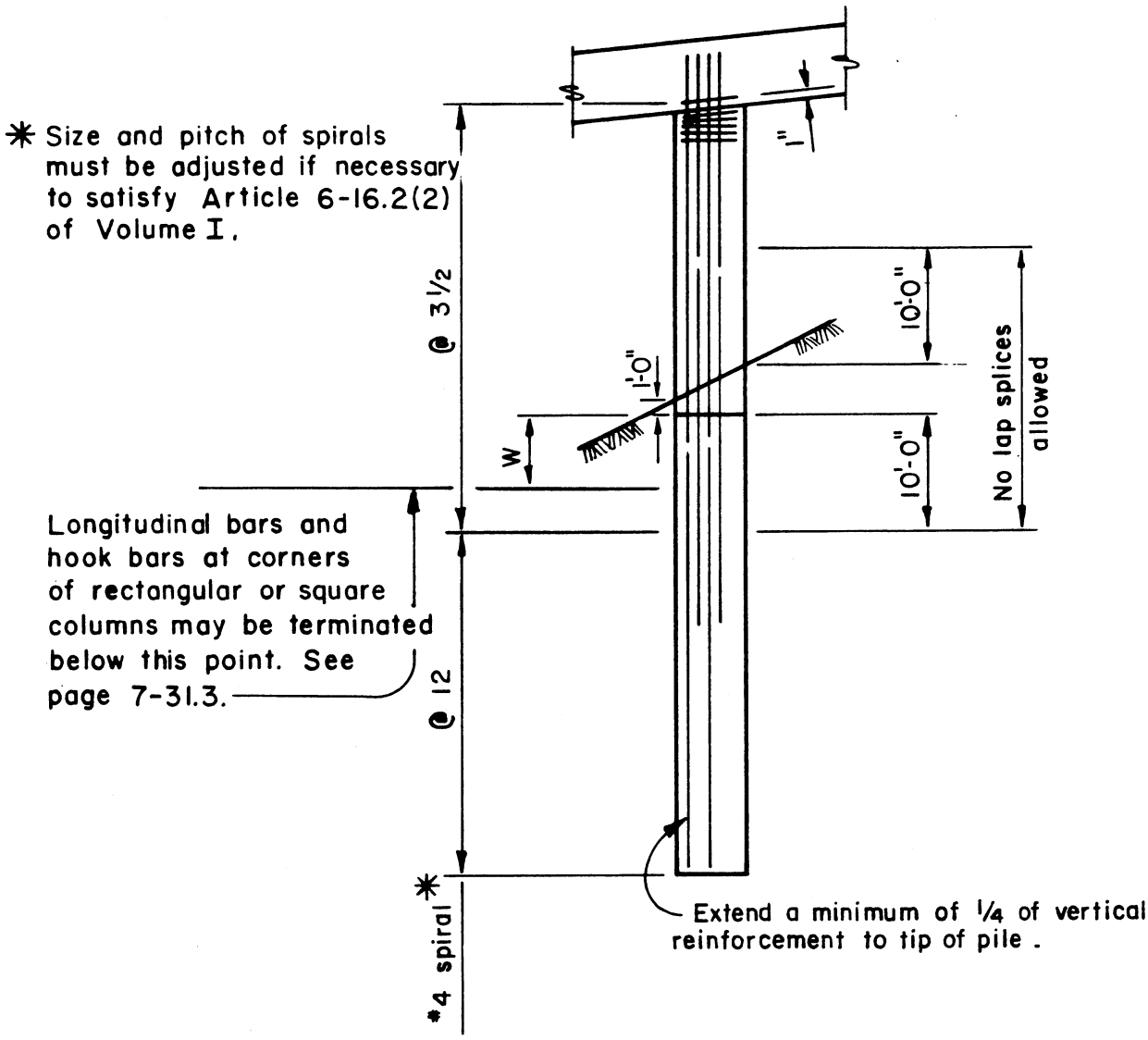

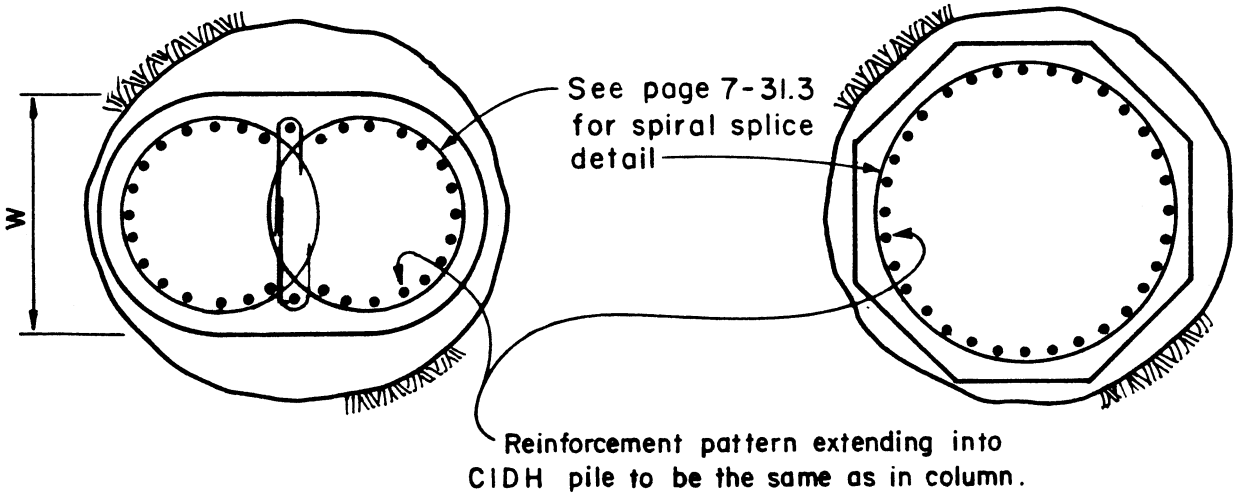

VERTICAL COLUMN REINFORCEMENT

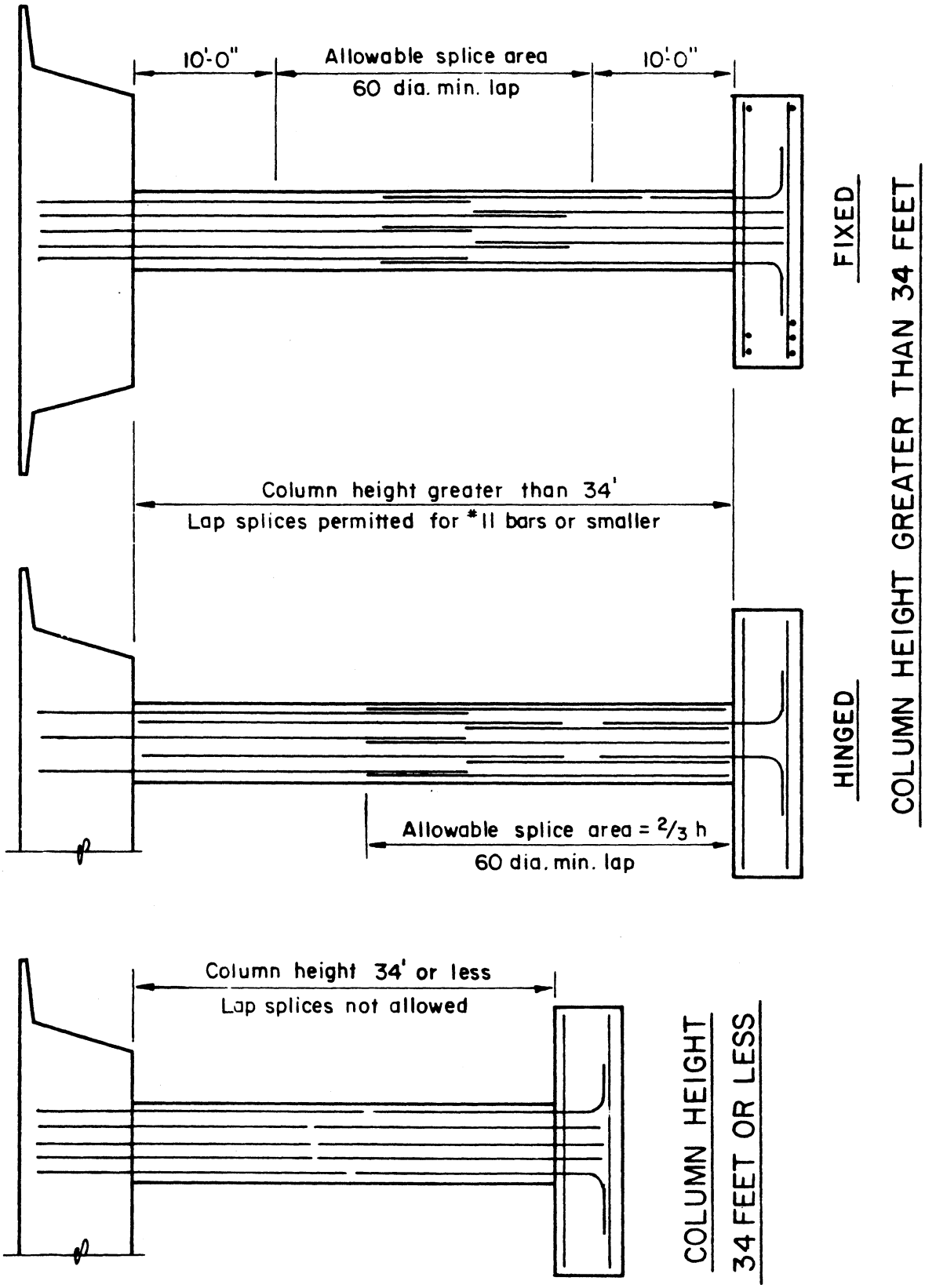

WEB WALL FOR PILE BENTS

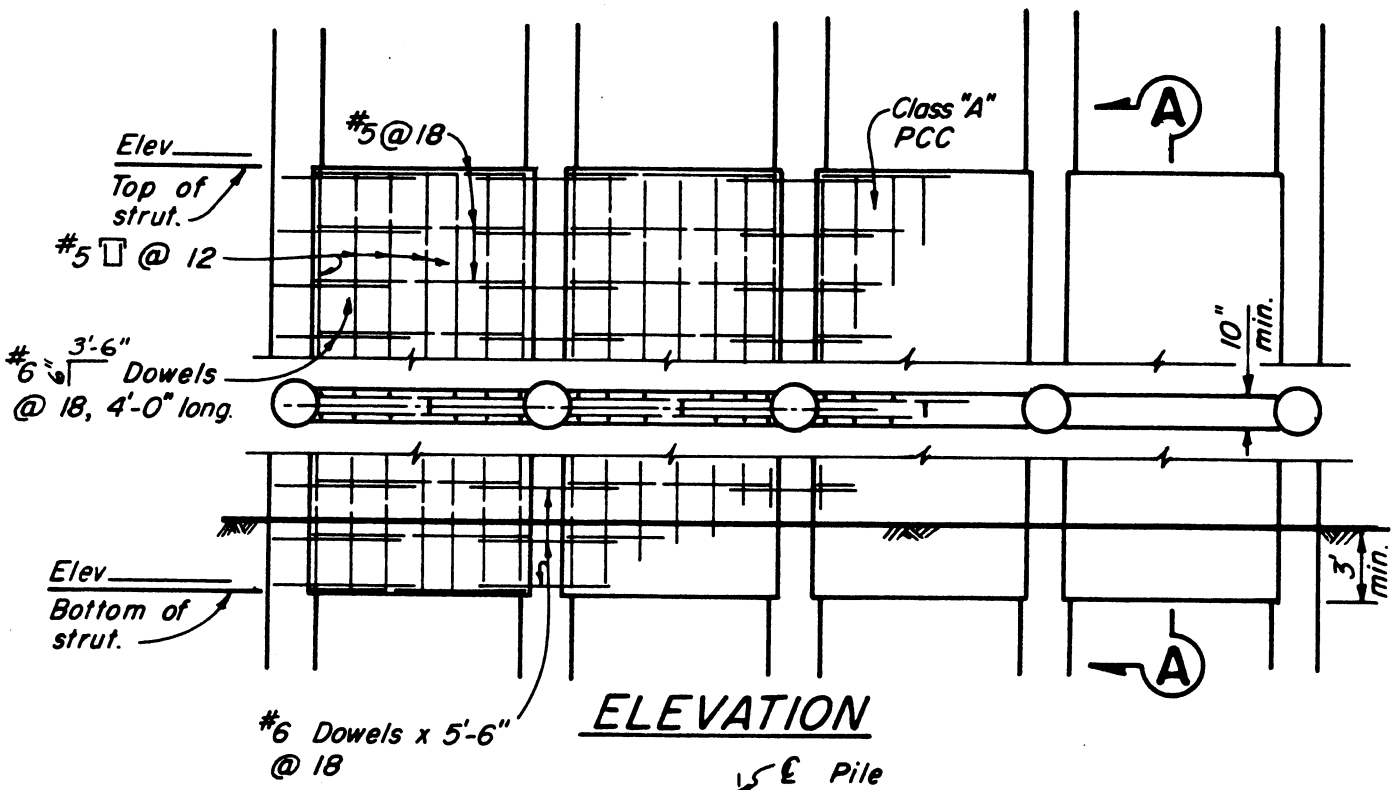

ELEVATION

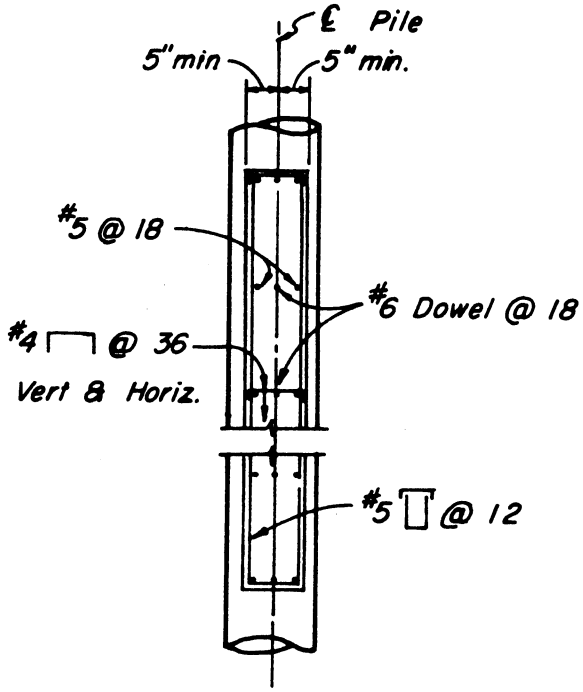

SECTION A-A

HOOKS ON COLUMN REINFORCEMENT

When it is necessary to hook a large number of column bars in a bent cap or footing, sufficient space should be provided so that the hooks don't interfere with other reinforcing or prestressing tendons. The following details are typical of provisions that should be made.

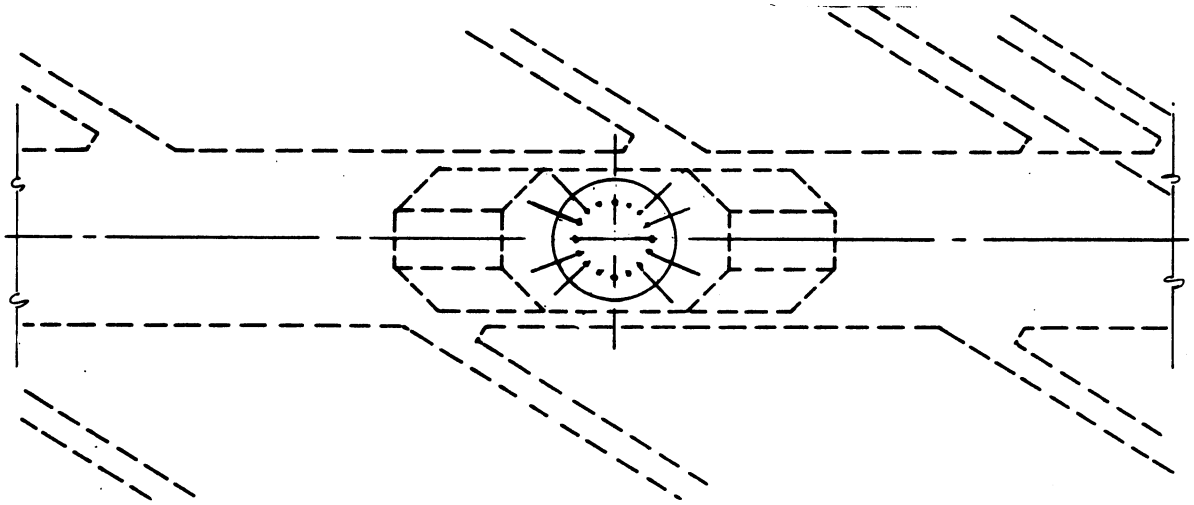

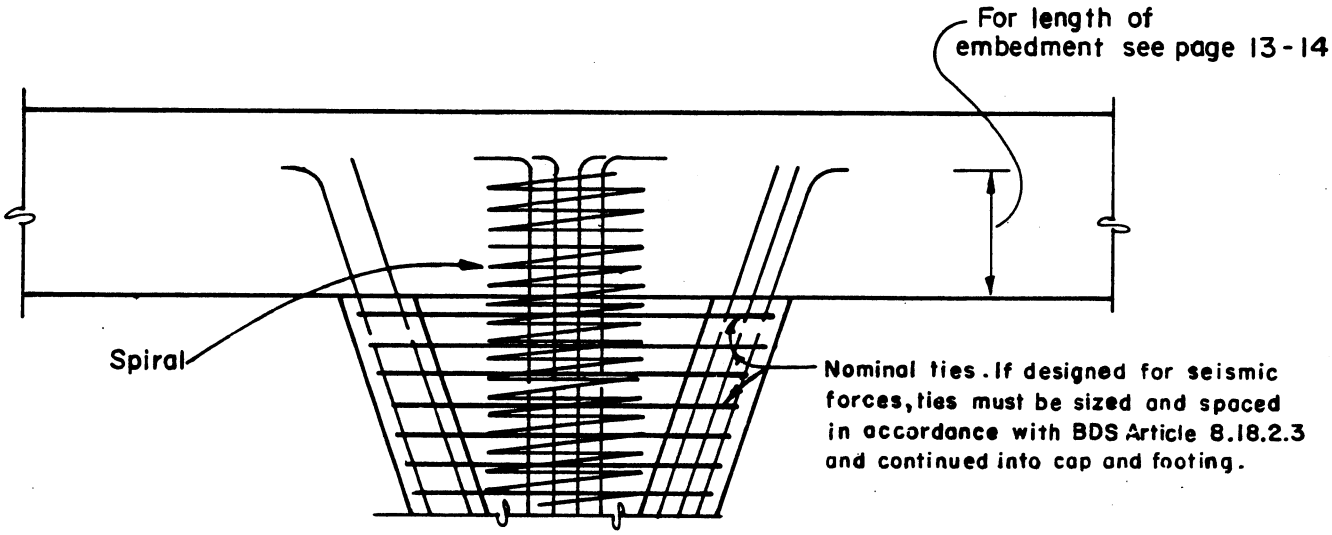

TYPICAL DETAILS

BENT CAP REINFORCEMENT
MAIN REINFORCEMENT OUTSIDE CAP STIRRUPS

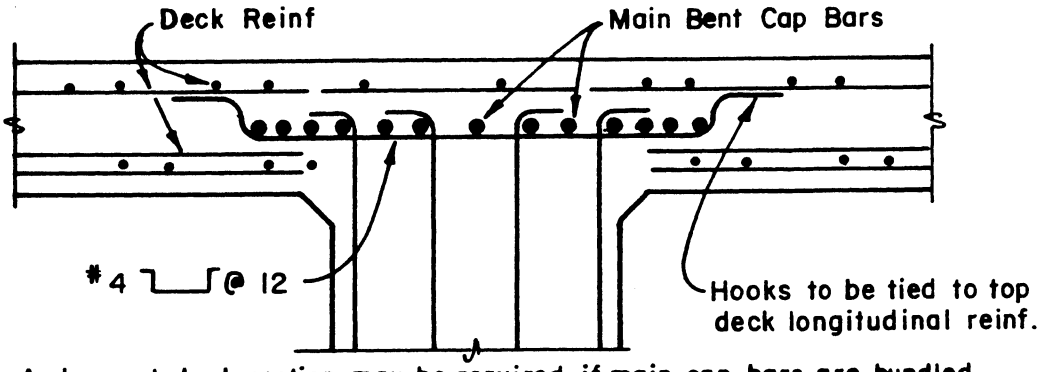

A dropped deck section may be required if main cap bars are bundled vertically. Distribution bars and bottom transverse bars may have to be terminated farther from the bent cap than 3" (standard) to allow vertical clearance for Main Bent Cap Bars.

SKEW ≤ 20°

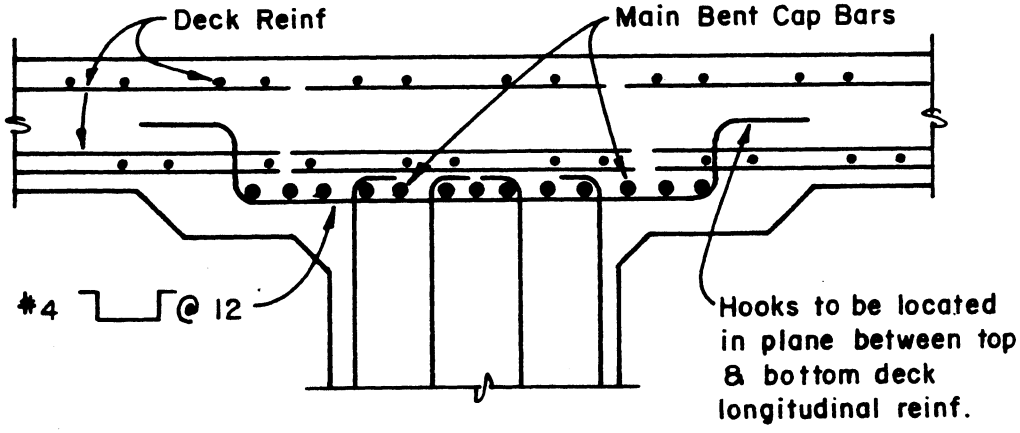

SKEW > 20°

General Note:

Main Bent Cap Reinf may be bundled vertically or horizontally. Vertical bundles, generally should be avoided in Prestressed Bridges.

BENT CAP SECTION DETAILS 0° to 20° SKEW

T Beams or Box Girders where deck reinforcement is placed parallel to cap

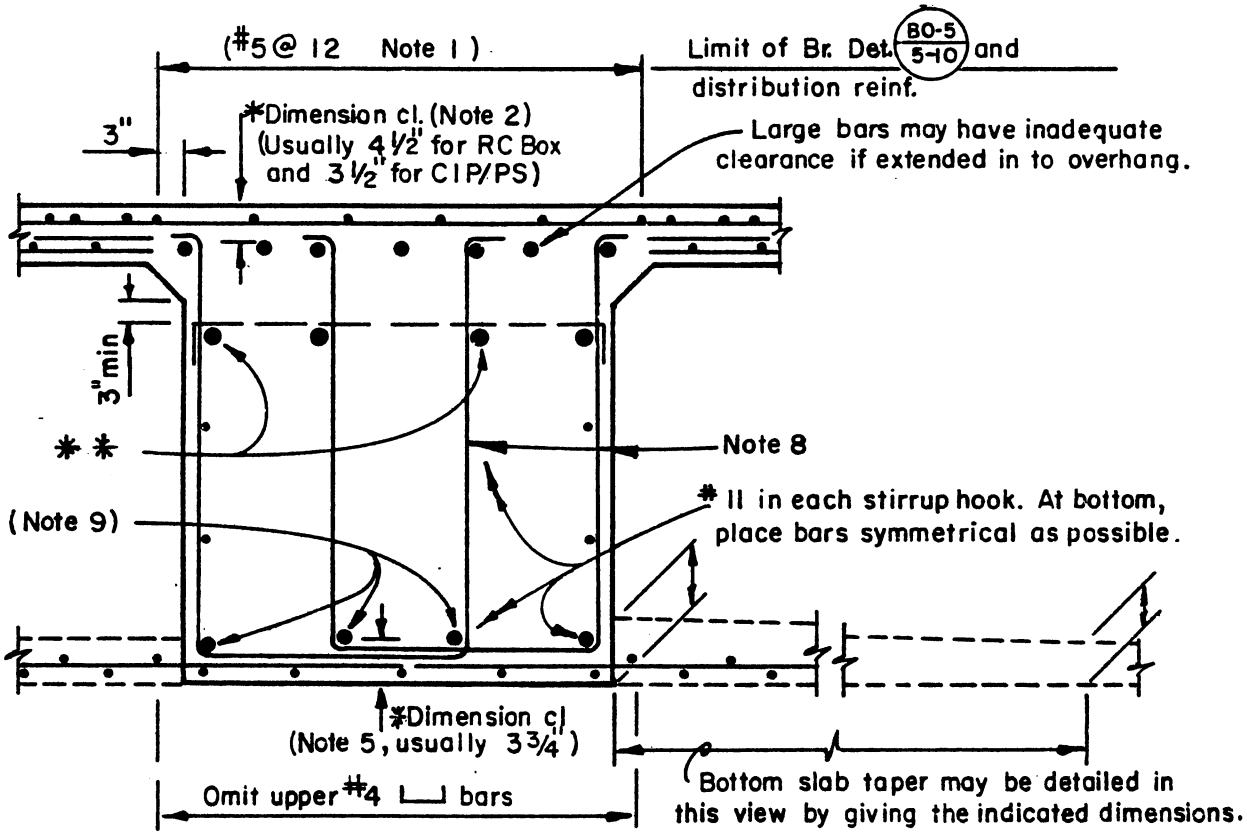

R.C. BOX GIRDER BOTTOM SLAB AWAY FROM COLUMNS

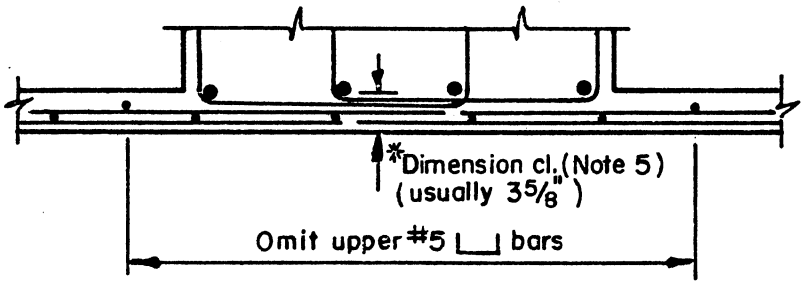

* Clearance to main cap reinforcement. (Detailers add this note)

* * Reinforcement may be bent or lowered to clear P/S ducts.

CIP/PS BOX GIRDER BOTTOM SLAB

Continued on BDD 7-42.1

BENT CAP SECTION DETAILS (Cont)

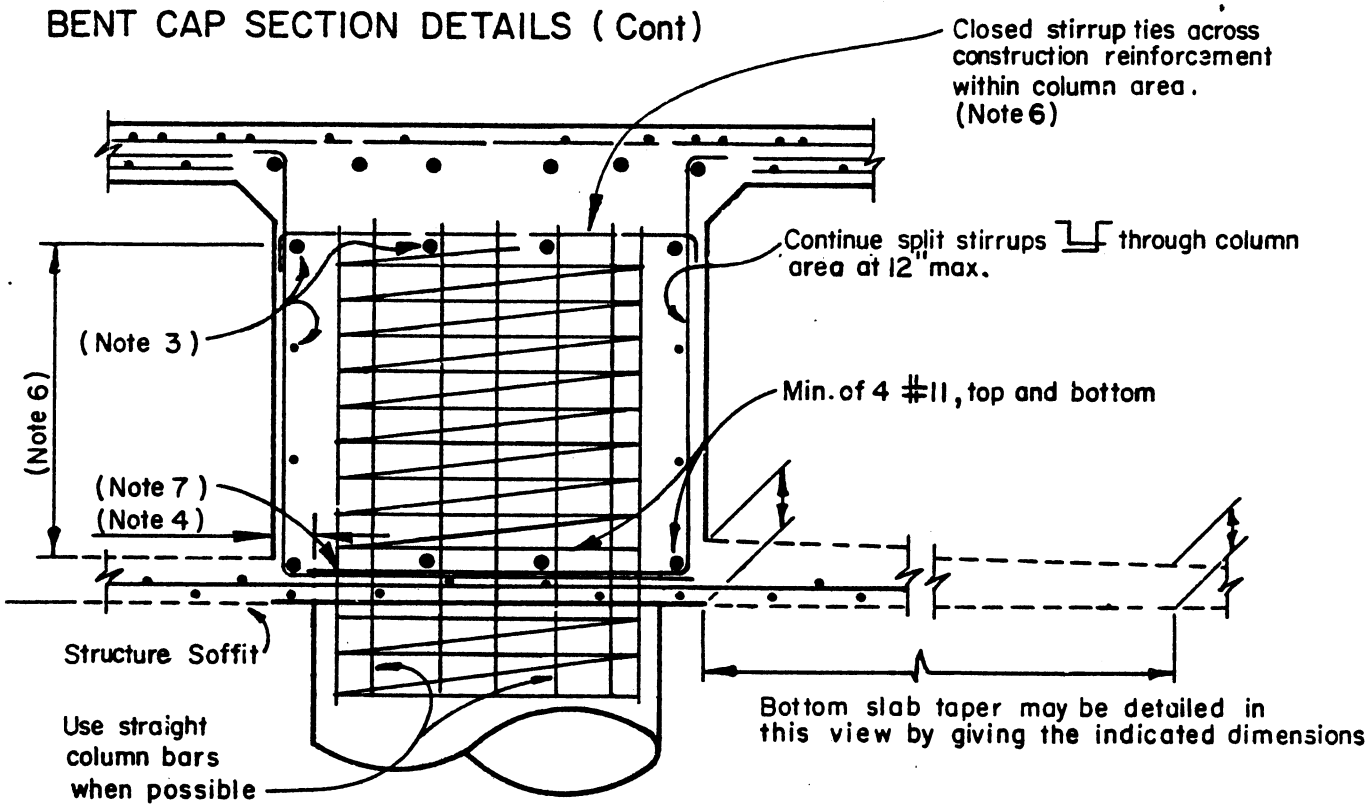

AT COLUMN

NOTES:

1. Adequate deck overhang reinforcement must be detailed on plan or elevation view. Closer spacing may be required for servicibility condition of bent cap.
2. Detail clearance to main cap reinf. so that girder reinf. will rest on main cap bars.
3. Amount of construction and sideface reinforcement to be determined by the designer.
4. Caps should be at least 6" wider than columns, Additional width may be required by the designer.
5. Detail clearance to main cap reinf. so that main cap bars will rest on girder reinf. for R.C. Box Girder, or top longitudinal reinf. in bottom slab on CIP/ PS Box Girder.
6. When dimension exceeds 3'-0" add closed stirrup ties at 3'-0" max. vertical spacing. Hook over sideface reinforcement. Ties same size and horizontal spacing as stirrups.
7. Spiral may be discontinuous at bent cap (and footing) to allow for placing cap (and footing) reinforcement. Discontinuity locations must be designated on the plans.
8. Multiple stirrup legs should be equally spaced. If equal spaces are not possible for symmetry of main reinforcement, stirrup width should be dimensioned on plans. Place stirrups parallel to girders.
9. Special consideration should be given for spacing bottom cap reinforcement and vertical reinforcement in round columns.

BENT CAP SECTION DETAILS OVER 20° SKEW

T-Beams or Box Girders where deck reinf. is placed normal or radial to bridge

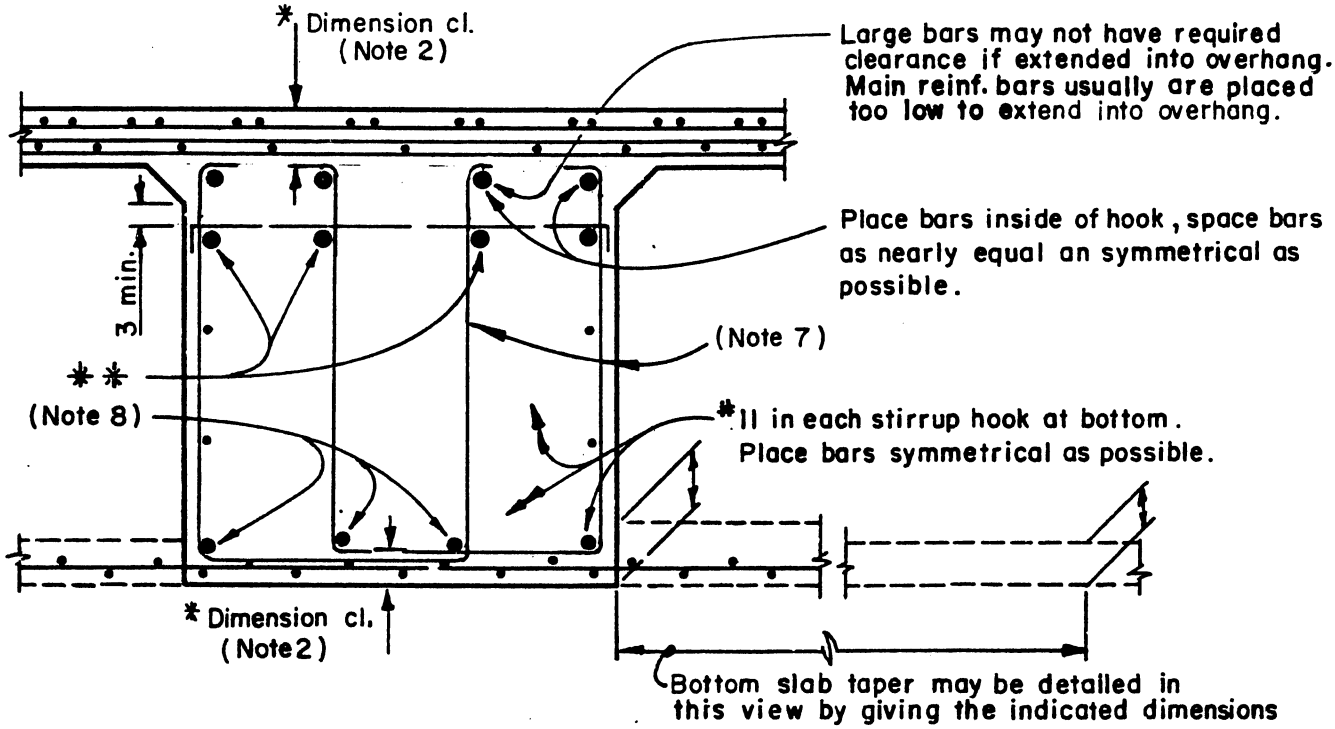

R.C. BOX GIRDER BOTTOM SLAB AWAY FROM COLUMNS

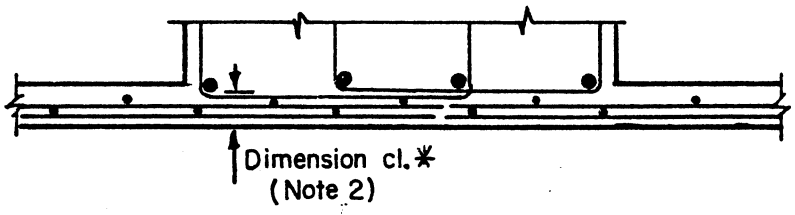

* Clearance to main cap reinforcement. (Detailers add this note)

* * Reinforcement may be bent or lowered to clear P/S ducts.

CIP/PS BOX GIRDER BOTTOM SLAB

Continued on BDD 7-43.1

BENT CAP SECTION DETAILS (Cont.)

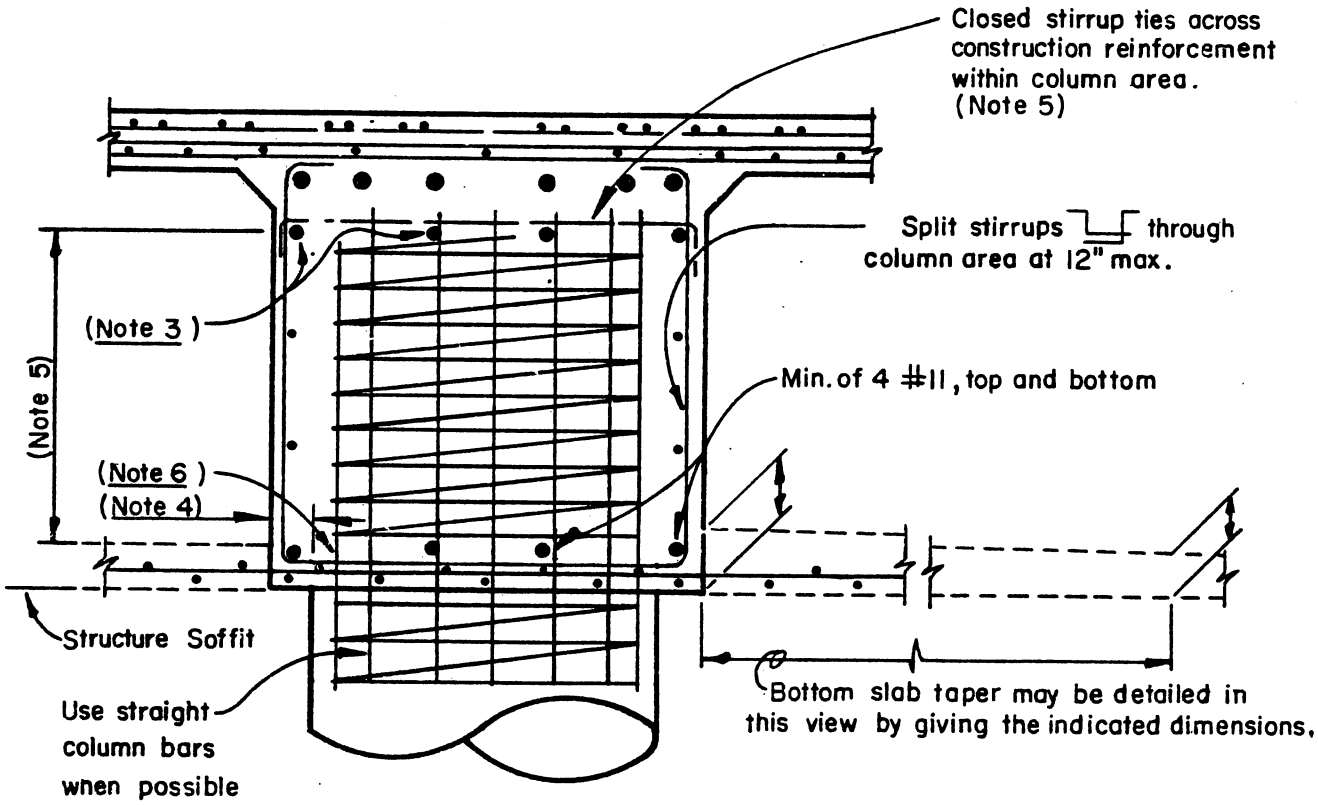

AT COLUMN

NOTES:

2. Detail clearance to main cap reinf. so that main girder reinf. will clear stirrups.
3. Amount of construction and sideface reinforcement to be determined by the designer. In prestessed bridges, the construction reinforcement must be dimensioned to clear tendons.
4. Caps should be at least 6" wider than columns, Additional width may be required by the designer.
5. When dimension exceeds 3'-0" add closed stirrup ties at 3'-0" max. vertical spacing. Hook over sideface reinforcement. Ties same size and horizontal spacing as stirrups.
6. Spiral may be discontinuous at bent cap (and footing) to allow for placing cap (and footing) reinforcement. Discontinuity locations must be designated on the plans.
7. Multiple stirrup legs should be equally spaced. If equal spaces are not possible for symmetry of main reinforcement, stirrup width should be dimensioned on plans. Place stirrups normal to ℄ bent.
8. Special consideration should be given for spacing bottom cap reinf. and vertical reinf. in round columns.

BENT CAP REINFORCEMENT

STEEL OR PRESTRESSED GIRDERS

Heavy loads placed near the edge of a concrete surface can produce spalling. Two precautions should be taken to avoid this problem.

1. Additional reinforcement should be placed under the load and around the corner.
2. The load should be placed back away from the edge of concrete. Clearances from edge of load to corners are shown.

The following sketch is for a typical situation. It should be adapted to suit other similar conditions.

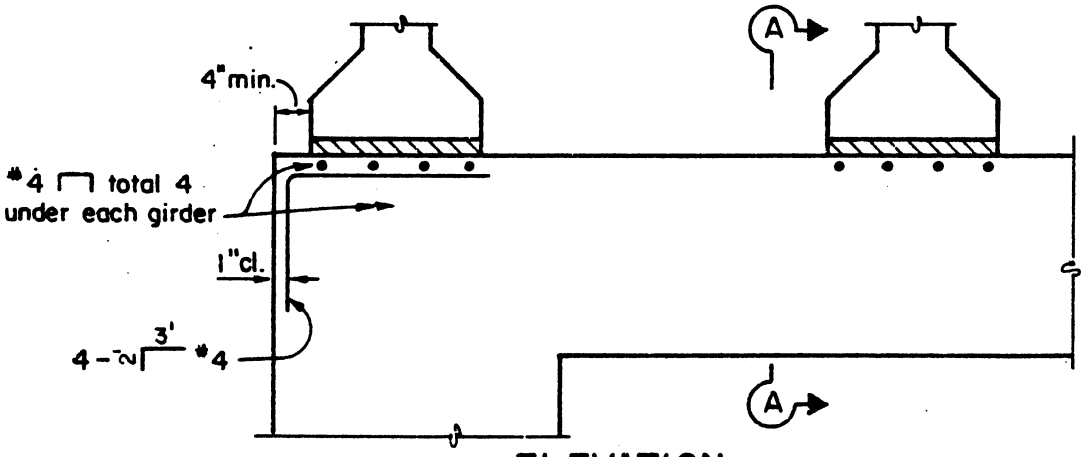

ELEVATION

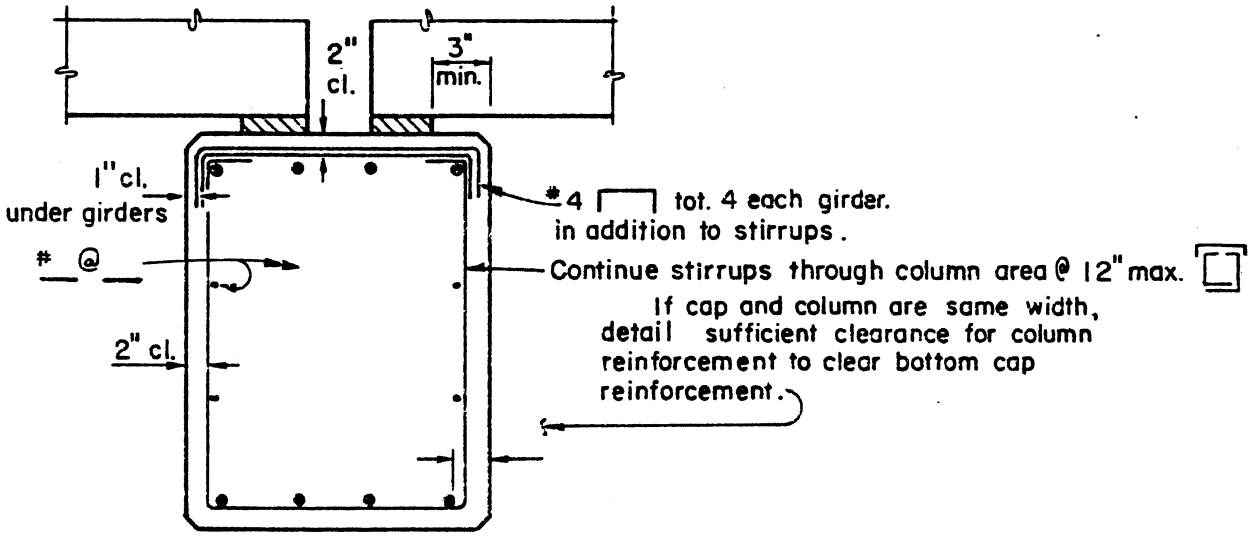

SECTION A-A

STIRRUP REINFORCEMENT AT BENT (VERTICAL EXTERIOR GIRDER)

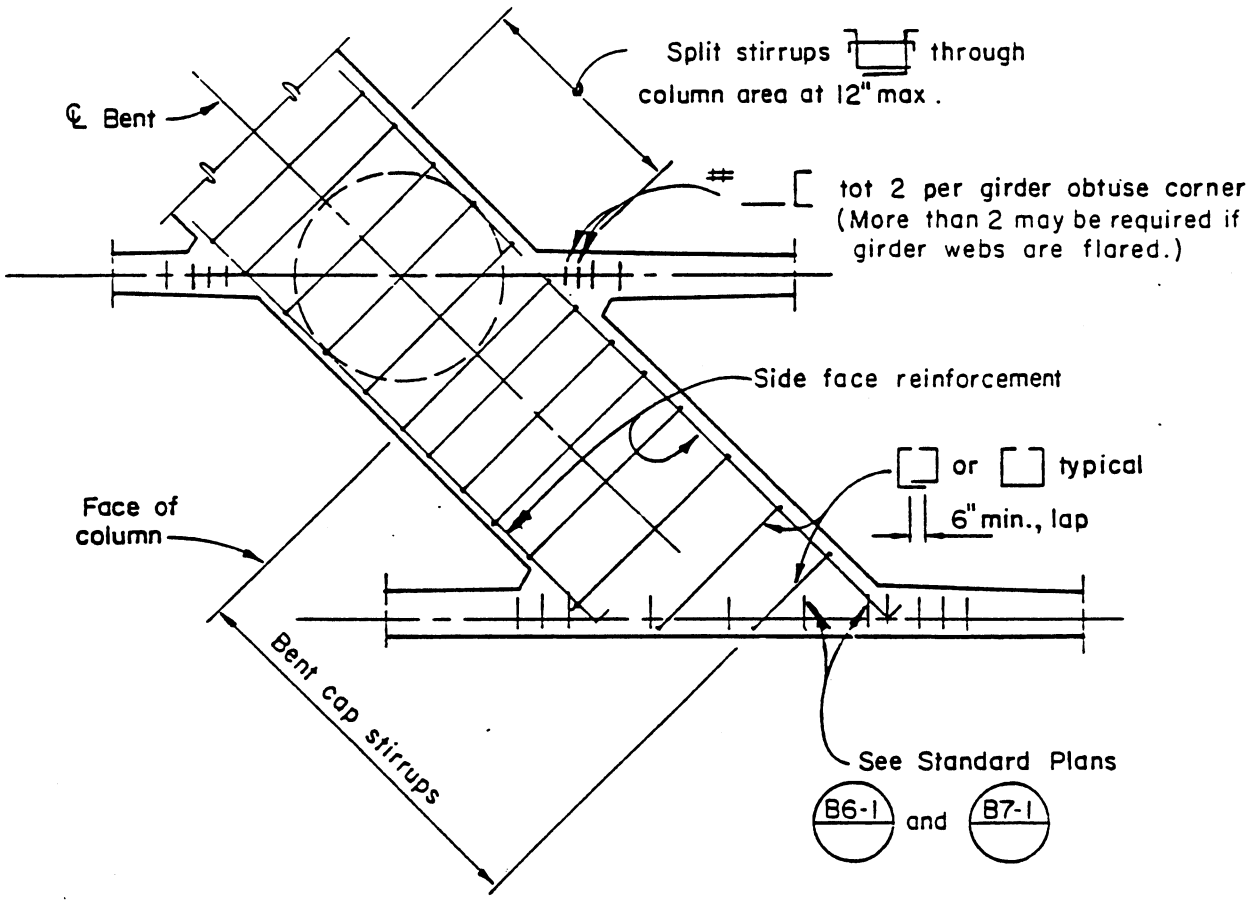

NOTE: On sharply skewed structures a part plan, such as shown here, should be used to assure adequate reinforcement at bent cap, hinge, and abutment ends.

Skews 0 - 20°: Place bent cap and diaphragm stirrups parallel to girders.

Skews over 20°: Place bent cap and diaphragm stirrups normal to ℄ Bent.

STIRRUP REINFORCEMENT AT BENTS (SLOPING EXTERIOR GIRDERS)

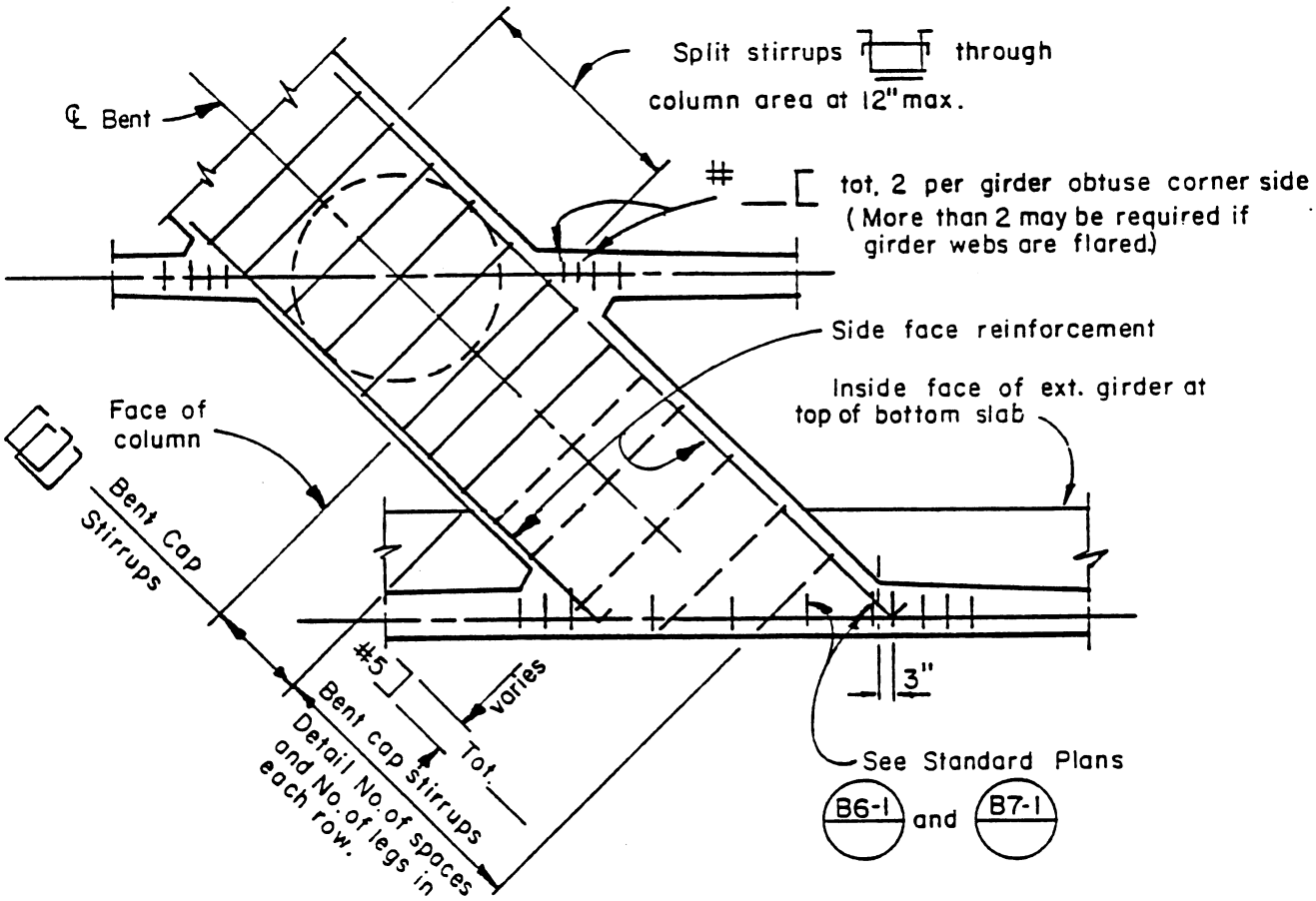

NOTE: On sharply skewed structures a part plan, such as shown here, should be used to assure adequate reinforcement at bent cap and hinge ends.

Skews 0 - 20° Place bent cap and diaphragm stirrups parallel to girders.

Skews over 20° Place bent cap and diaphragm stirrups normal to ℄ Bent.

SKEWED T-CAPS

A T-shaped skewed cap or cantilever which supports precast-prestressed girders should have special details showing reinforcing in the skewed corners.

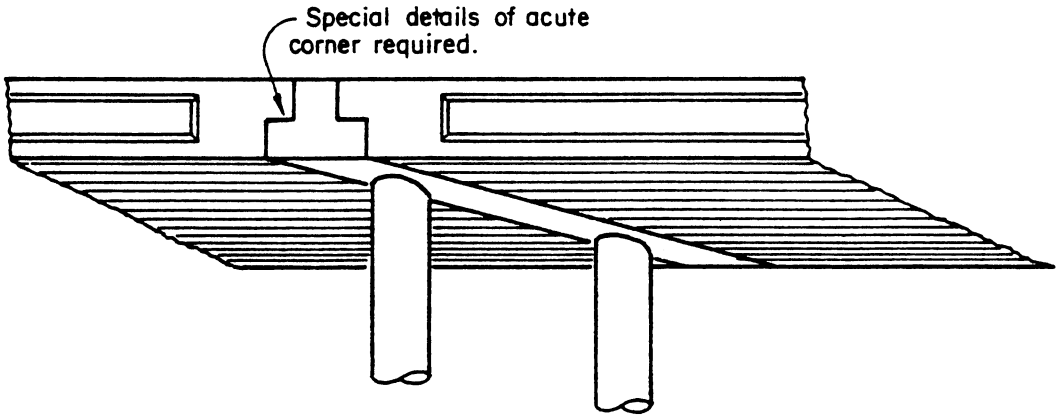

These corners are very critical. The designer should provide additional reinforcement to allow for construction tolerances, uneven seating of the girder, longitudinal and transverse movement of the girder, and other irregularities.

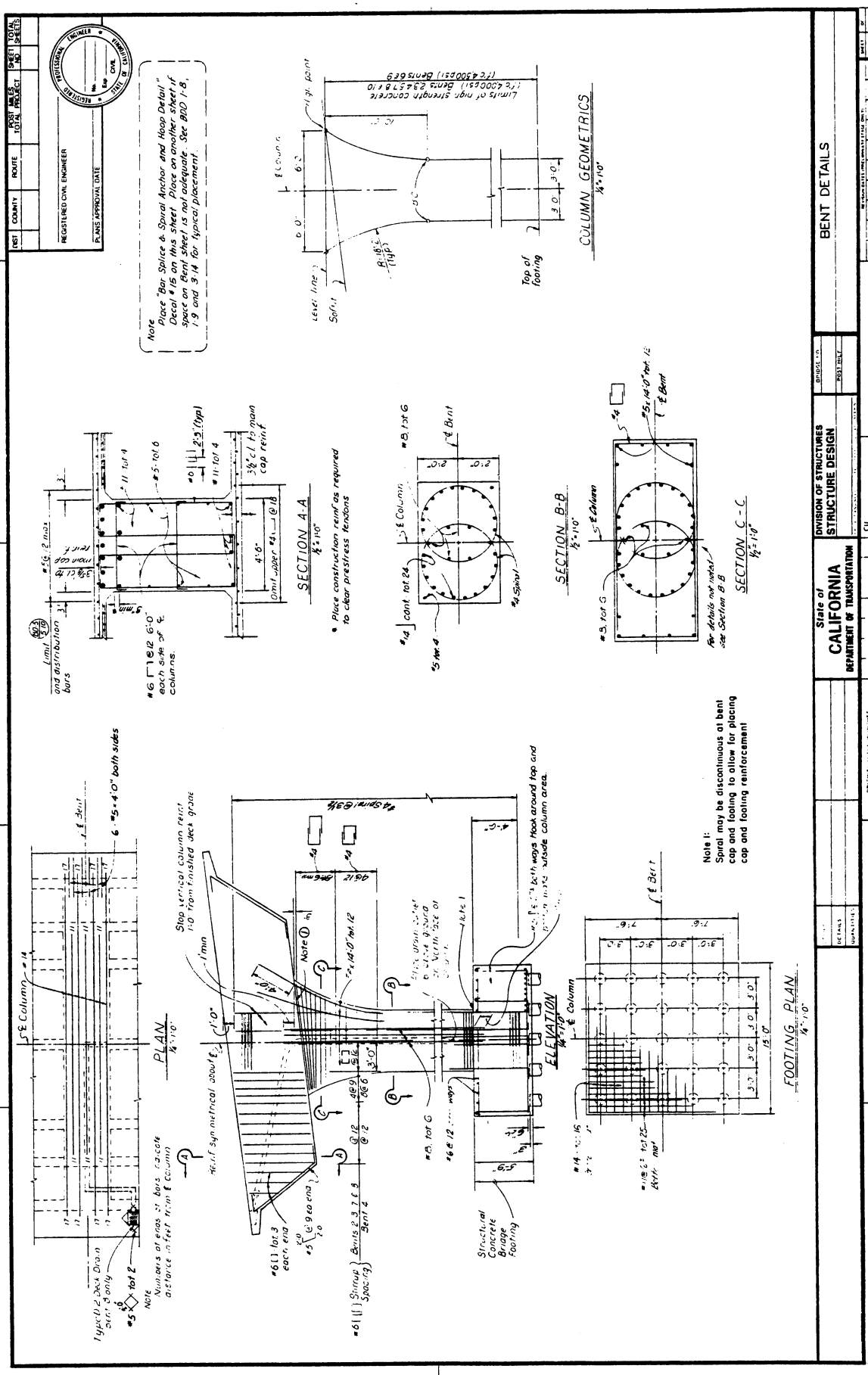
BENT DETAILS
State of CALIFORNIA
DEPARTMENT OF TRANSPORTATION
DIVISION OF STRUCTURES
STRUCTURE DESIGN
REGISTERED CIVIL ENGINEER
PLANS APPROVAL DATE
Note
Place "Bar Splice & Spiral Anchor and Hoop Detail" Decal #15 on this sheet. Place on another sheet if space on Bent sheet is not adequate. See BDD 1-8, 1-9 and 3-14 for typical placement.
COLUMN GEOMETRICS
SECTION A-A
SECTION B-B
SECTION C-C
PLAN
ELEVATION
FOOTING PLAN
Note I:
Spiral may be discontinuous at bent cap and footing to allow for placing cap and footing reinforcement
Structural Concrete Bridge Footing

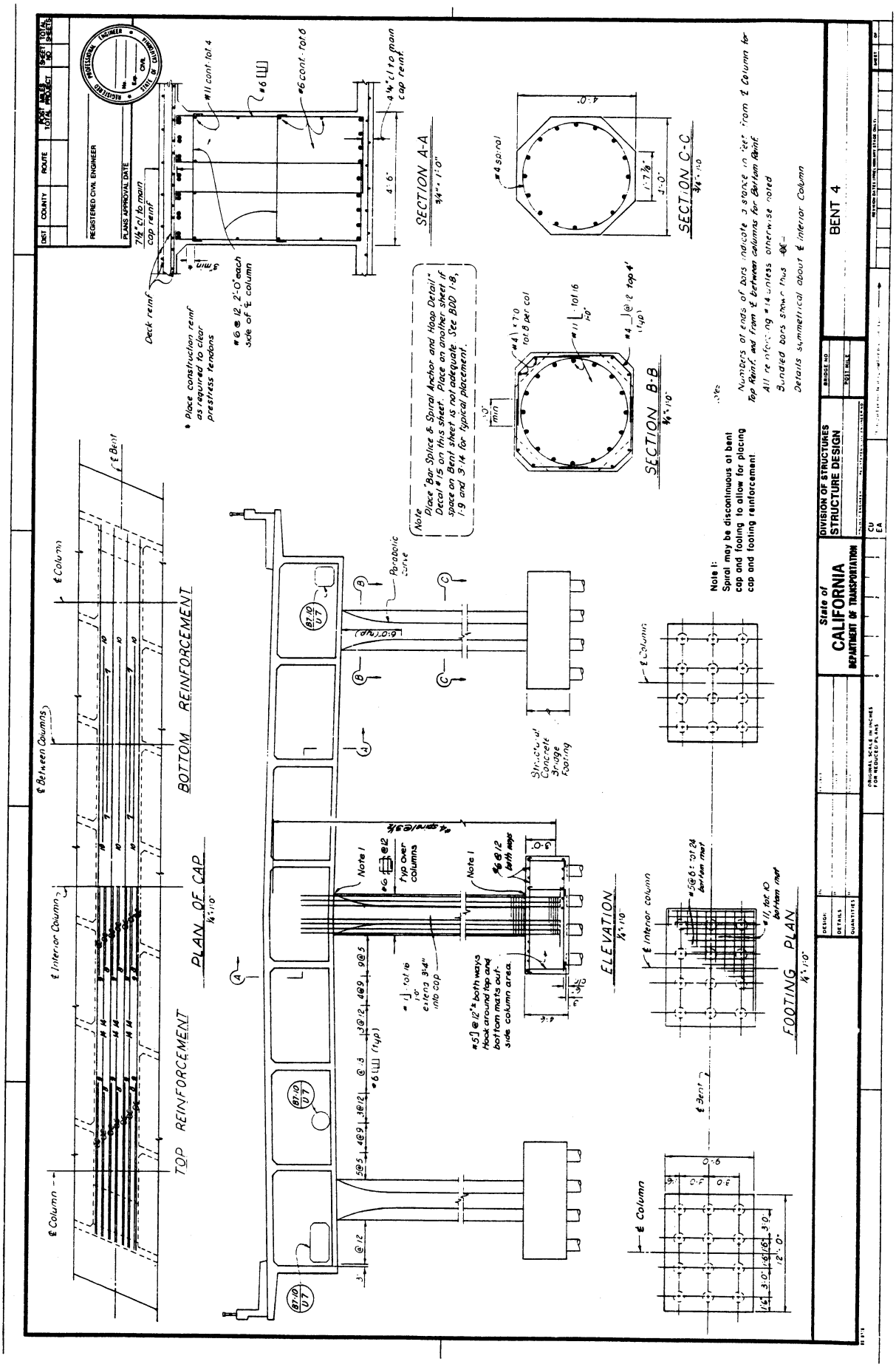
BENT 4
State of CALIFORNIA
DEPARTMENT OF TRANSPORTATION
DIVISION OF STRUCTURES
STRUCTURE DESIGN
REGISTERED CIVIL ENGINEER
PLANS APPROVAL DATE
SECTION A-A
SECTION B-B
SECTION C-C
PLAN OF CAP
TOP REINFORCEMENT
BOTTOM REINFORCEMENT
ELEVATION
FOOTING PLAN
Note
Place "Bar Splice & Spiral Anchor and Hoop Detail" Decal #15 on this sheet. Place on another sheet if space on Bent sheet is not adequate. See BDD 1-8, 1-9 and 3-14 for typical placement.
Note 1:
Spiral may be discontinuous at bent cap and footing to allow for placing cap and footing reinforcement.
Numbers at ends of bars indicate distance in feet from ℄ Column for Top Reinf. and from ℄ between columns for Bottom Reinf.
All reinforcing #14 unless otherwise noted
Bundled bars shown thus
Details symmetrical about ℄ Interior Column
Structural Concrete Bridge Footing
Parabolic curve
Deck reinf
Place construction reinf as required to clear prestress tendons
#6 @ 12, 2'-0" each side of ℄ column
#11 cont. tot 4
#6 cont. tot 6
4¼" cl to main cap reinf.
7½" cl to main cap reinf
#4 spiral
#11 tot 16
#4 @ 12 top 4' (typ)
#4 tot 8 per col
#5 @ 12 both ways
#6 @ 12 both ways
#11 tot 10 bottom mat
#5 @ 6 tot 24 bottom mat
#6 @ 12 typ over columns
#11 tot 16 extend 3'-4" into cap
#6 (typ)
℄ Column
℄ Interior Column
℄ Between Columns
℄ Bent
℄ Interior column
DESIGN
DETAILS
QUANTITIES
ORIGINAL SCALE IN INCHES FOR REDUCED PLANS

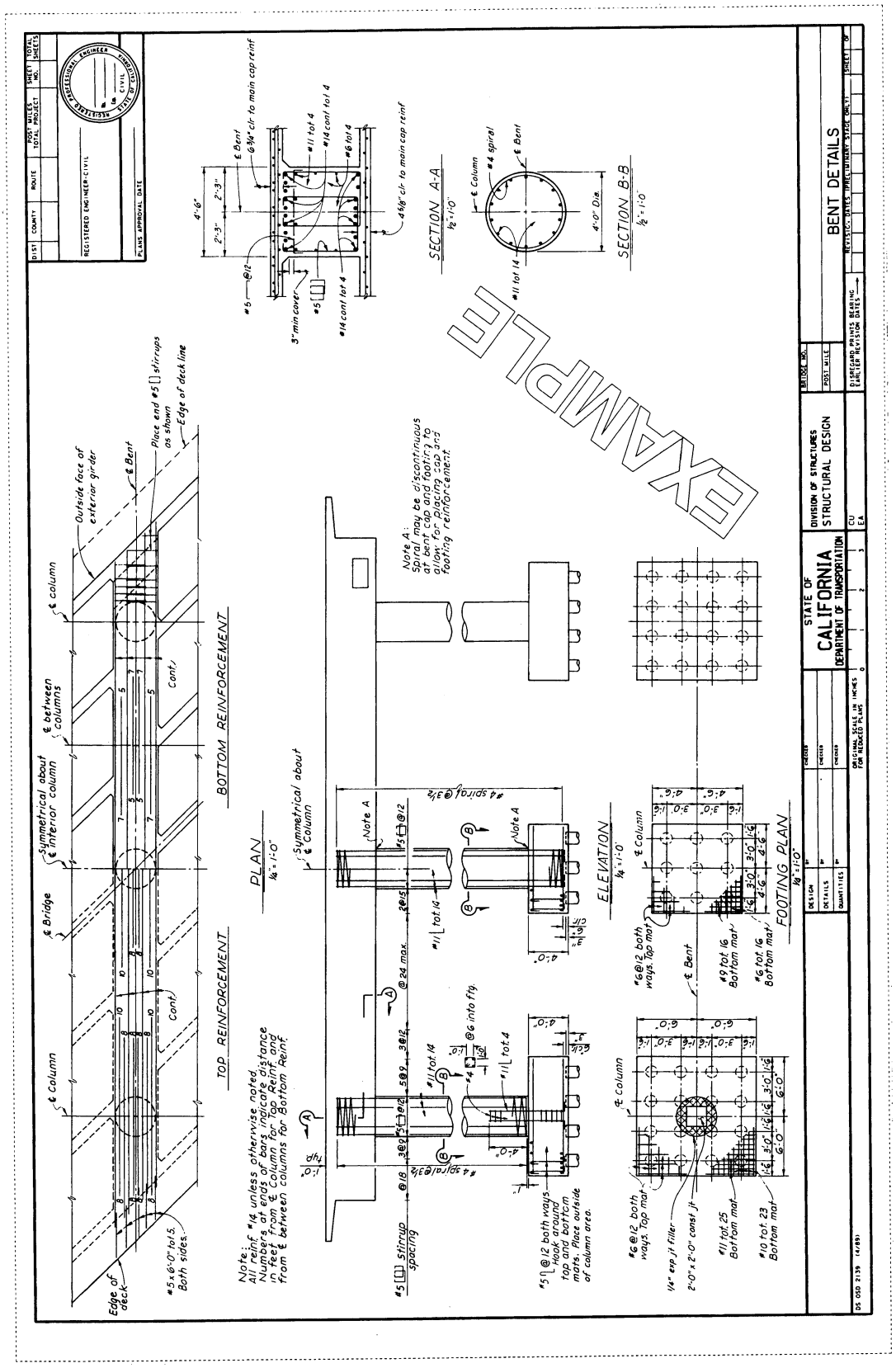

Note: Place "Bar Splice and Spiral Anchor and Hoop Detail" Decal No. 15 (CADD Pattern No. 3) on this sheet. Place on another sheet if space on Bent sheet is not adequate. See Bridge Design Details, pages 1-8, 1-9 and 3-14 for typical placement.

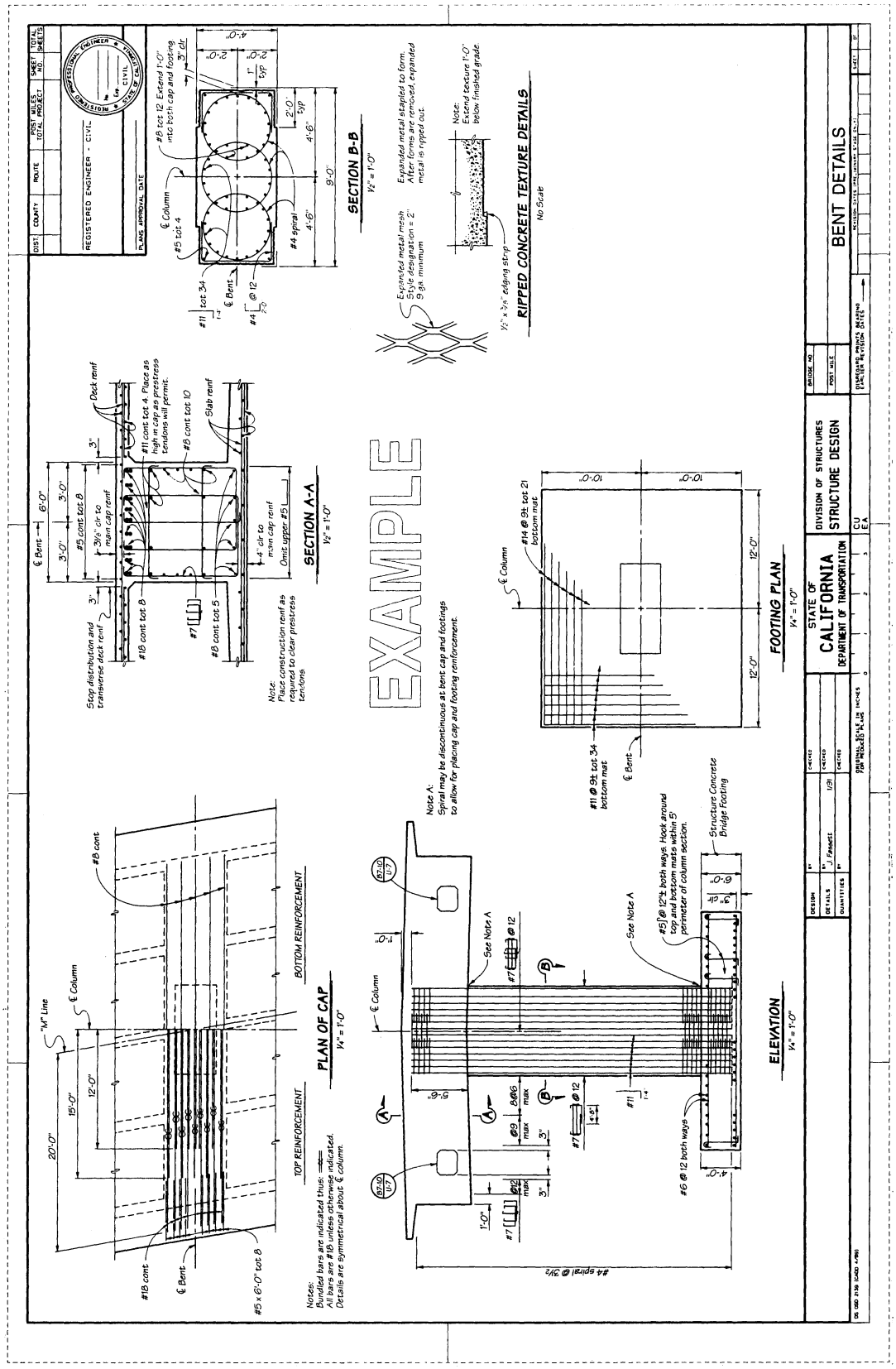

Note: Place "Bar Splice and Spiral Anchor and Hoop Detail" Decal No. 15 (CADD Pattern No. 3) on this sheet. Place on another sheet if space on Bent sheet is not adequate. See Bridge Design Details, pages 1-8, 1-9 and 3-14 for typical placement.

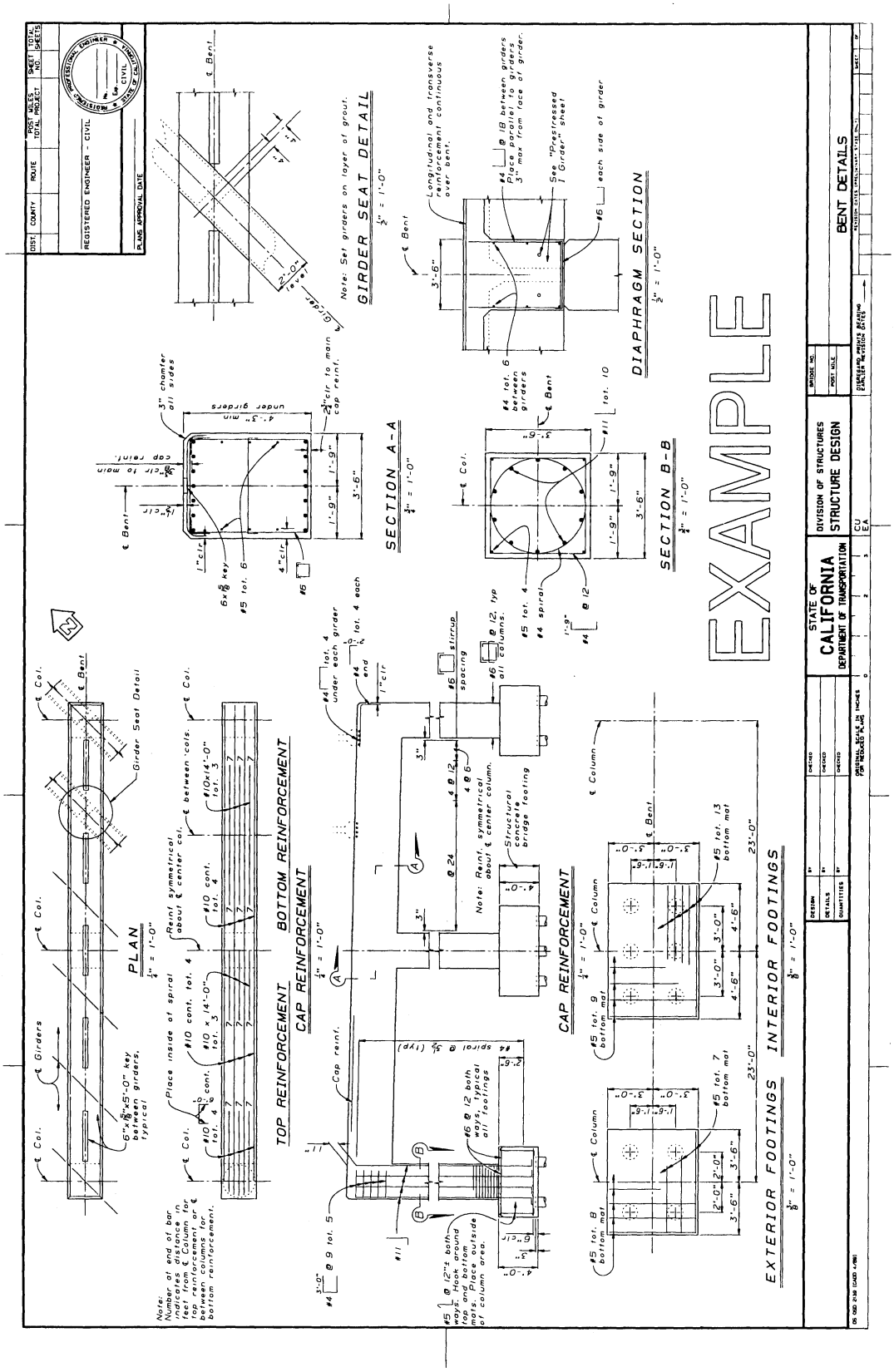

Note: Place "Bar Splice and Spiral Anchor and Hoop Detail" Decal No. 15 (CADD Pattern No. 3) on this sheet. Place on another sheet if space on Bent sheet is not adequate. See Bridge Design Details, pages 1-8, 1-9 and 3-14 for typical placement.