DIST.	COUNTY	ROUTE	POST MILES TOTAL PROJECT	SHEET No.	TOTAL SHEETS

REGISTERED ENGINEER - CIVIL

PLANS APPROVAL DATE

REGISTERED PROFESSIONAL ENGINEER — No. — Exp. — CIVIL — STATE OF CALIFORNIA

The State of California or its officers or agents shall not be responsible for the accuracy or completeness of electronic copies of this plan sheet.

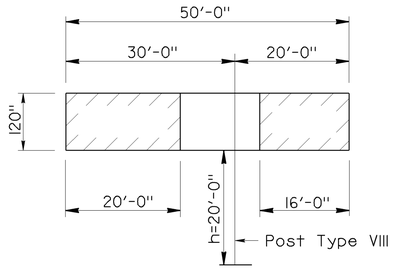

① FNBT STA III + II "A-1"
OVERHEAD SIGN TRUSS
SINGLE POST TYPE
Laminated Sign Panel

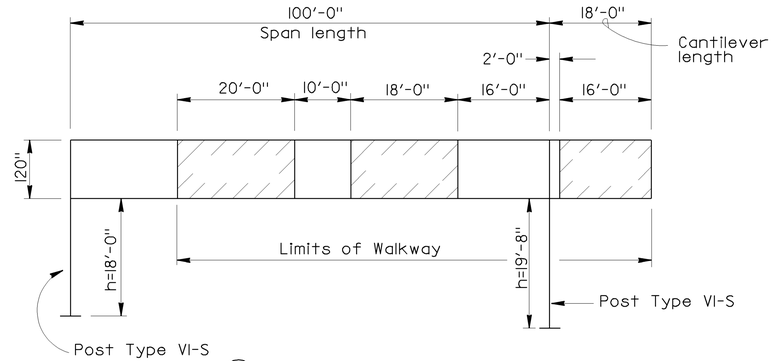

② FNBT STA 222 + 22 "B-2"
OVERHEAD SIGN TRUSS
TWO POST TYPE
Removable Sign Panel

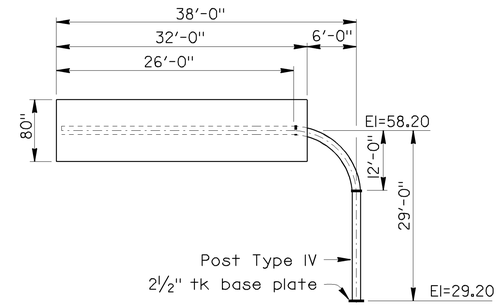

③ FNBT STA 333 + 33 "C-3"
OVERHEAD SIGN TUBULAR
SINGLE POST TYPE
Vertical Post

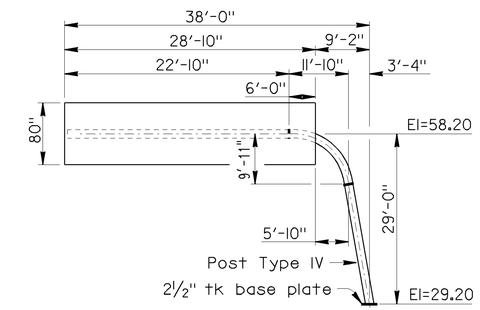

④ FNBT STA 444 + 44 "D-4"
OVERHEAD SIGN TUBULAR
SINGLE POST TYPE
Slanted Post

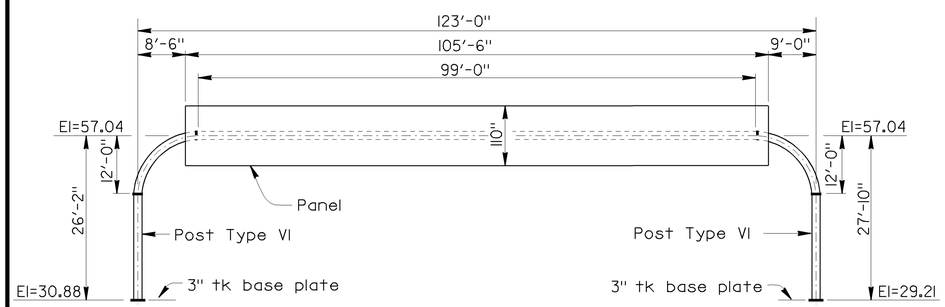

⑤ FNBT STA 555 + 55 "E-5"
OVERHEAD SIGN TUBULAR
TWO POST TYPE
Vertical Post

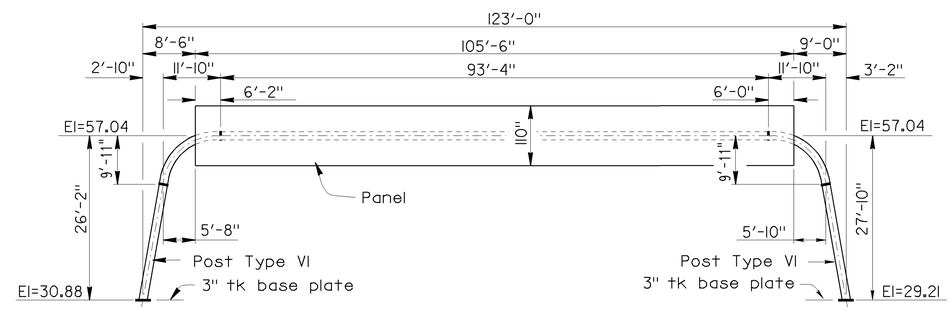

⑥ FNBT STA 666 + 66 "F-6"
OVERHEAD SIGN TUBULAR
TWO POST TYPE
Slanted Post

Sign No.	Station	Sign Structure - lbs			CIDH Pile				5' Dia. Sign Pile
		Truss	Tubular	Bridge Mounted	Linear		Diameter		
					Lt	Rt	Lt	Rt	
①	111+11 "A-1"	24,758				25'-0"		5'-0"	25'-0"
②	222+22 "B-2"	48,982			28'-0"	28'-0"	5'-0"	5'-0"	56'-0"
③	333+33 "C-3"		18,450			33'-0"		5'-0"	33'-0"
④	444+44 "D-4"		17,864			33'-0"		5'-0"	33'-0"
⑤	555+55 "E-5"		49,886		33'-0"	33'-0"	5'-0"	5'-0"	66'-0"
⑥	666+66 "F-6"		49,298		33'-0"	33'-0"	5'-0"	5'-0"	66'-0"
	Total	73,740	135,498						279'

NOTE:

This sheet illustrates the method of providing a summary of quantities. Truss, and Tubular signs are usually not intermixed within a project.

THIS SHEET NOT A PART OF CONTRACT PLANS

OVERHEAD SIGNS

FORMAT AND QUANTITIES SHEET | 6