DIST.	COUNTY	ROUTE	KILOMETER POST TOTAL PROJECT	SHEET NO.	TOTAL SHEETS

REGISTERED ENGINEER - CIVIL

PLANS APPROVAL DATE

REGISTERED PROFESSIONAL ENGINEER No. Exp. CIVIL STATE OF CALIFORNIA

The State of California or its officers or agents shall not be responsible for the accuracy or completeness of electronic copies of this plan sheet.

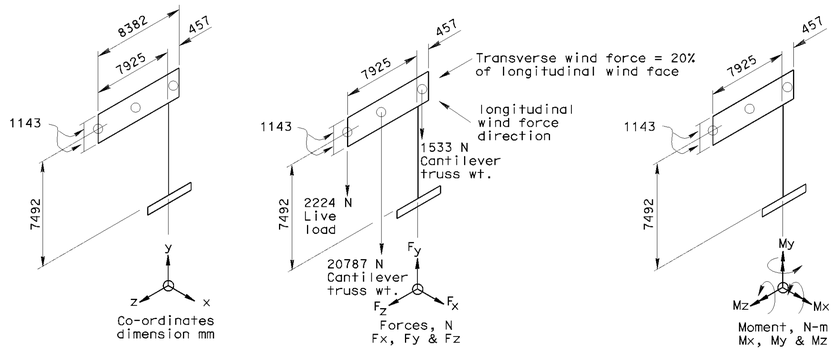

Walkway with platform & hand rail, panels approx. = 1605 N/m
Total weight, approx. = 1605 N/m x 8.38 = 13450 N

Actual moment(N-m) =
① Ht of col x area x wind pressure(1930 Pa) x 1(longitudinal direction) +
② Ht(col) x area x wind pressure x 0.2(transverse direction) +
③ DL x eccentricity+
④ LL(2224) x arm Length

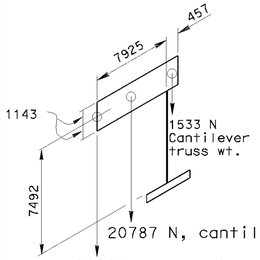

① Mz,100% = 7.492 x 2.286 x 8.382 x 1930 x 1 = 277063 N-m
② Mx, 20% = 7.492 x 2.286 x 8.382 x 1930 x 0.2 = 55413 N-m
③ +DL x ecc = 33504 x 3.9625 - 2266 x 0.2285 = 132242 N-m
④ +LL x arm length = 2224 N x 7.925 = 17625 N-m
∑M = ① + ② + ③ + ④ =
=482343 N-m use col# VI pipe NPS 24 x 12.7

20787 N, cantilever wt at left side (use ref. sheet, page# 9)

2224 N LL, on truss
wt of walkway & misc. etc. = 13450 N for length of 8.4 m
12717 N ← 7.9 m left side wt = 12717 N
733 N ← .46 m rt side wt = 733 N
33504 total force on truss at left side
2266 total force on truss at right side

EXAMPLE NO. 1: Cantilever

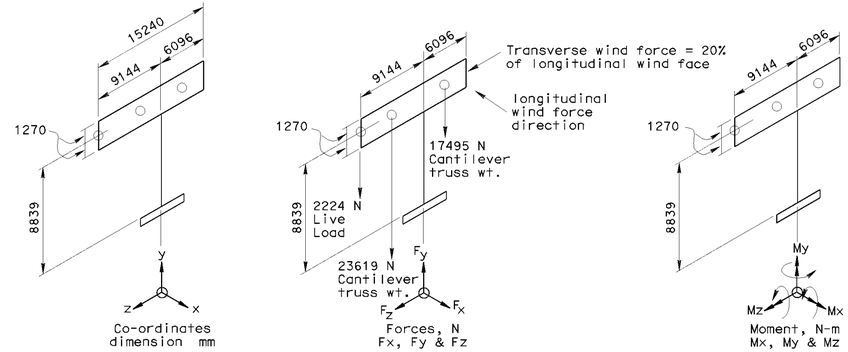

Walkway with platform & hand rail, panels approx. = 1605 N/m
Total weight, approx. = 1605 N/m x 15.24 = 24460 N

Actual moment(N-m) =
① Ht of col x area x wind pressure(1930) x 1(longitudinal direction) +
② Ht(col) x area x wind pressure x 0.2(transverse direction) +
③ DL x eccentricity +
④ LL(2224) x arm Length

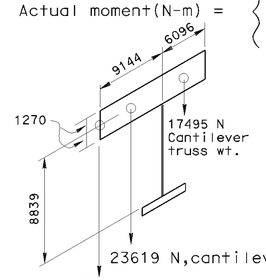

① Mz,100% = 8.839 x 2.54 x 15.240 x 1930 x 1 = 660358 N-m
② Mx, 20% = 8.839 x 2.54 x 15.240 x 1930 x 0.2 = 132072 N-m
③ +DL x ecc = 38295x 4.572 - 27279 x 3.048 = 91862 N-m
④ +LL x arm length = 2224 x 9.144 = 20336 N-m
∑M = ① + ② + ③ + ④ =
=904628 N-m use col# VIII pipe NPS 24 x 24.6 tk

23619 N,cantilever wt at left side (use ref. sheet page 9)

2224 N on truss,
wt of walkway & misc. etc. = 24460 N for length of 15.240 m
14676 ← 9.144 m left side wt = 14676 N
9784 ← 6.1 m rt side wt = 9784 N
38295 total force on truss at left side
27279 total force on truss at right side

EXAMPLE NO. 2: Butterfly

Gather data from example no. 2 reactions at the bottom of post can be approx. as below:

Fy = 2224 +23619+ 17495 + 24460 = 67798 N
Fx = 2.54 x 15.24 x 1930 x 1 = 74710 N (neglecting area of post)
Fz = 2.54 x 15.24 x 1930 x 0.2 = 14942 N (neglecting area of post)
Mx = 132072 + 91862 + 20336 = 244270 N-m
My = 44826 x 4.572 - 29884 x 3.048 = 113858 N-m
Mz = 660358 N-m

Post Type	Specification of pipe post	kg/m
II	Pipe NPS 14 x 12.7 TK	107
III	Pipe NPS 16 x 12.7 TK	123
IV	Pipe NPS 18 x 12.7 TK	138.9
V	Pipe NPS 20 x 12.7 TK	154.7
VI	Pipe NPS 24 x 12.7 TK	186.6
VII	Pipe NPS 24 x 19.0 TK	276.8
VIII	Pipe NPS 24 x 24.6 TK	354
IX	Pipe NPS 24 x 24.6 TK	354

ALL DIMENSIONS ARE IN MILLIMETERS UNLESS OTHERWISE SHOWN

Notes:

1. Legend:
   DL = Dead Load
   LL = Live Load
   ecc = Eccentricity
   TK = Thickness
2. Dimensions are mm (U.O.N.)
3. Height of column is from bottom of Base Plate to mid of sign panel. Limit of height is 6.4 m to 8.84 m.
4. Post Type # in Roman or Numerical implies the same specification of pipe post.

NO SCALE

POST TYPE SELECTION BY CHART

Note: Post chart is for balanced, unbalanced and cantilever O.H. Sign (Truss)

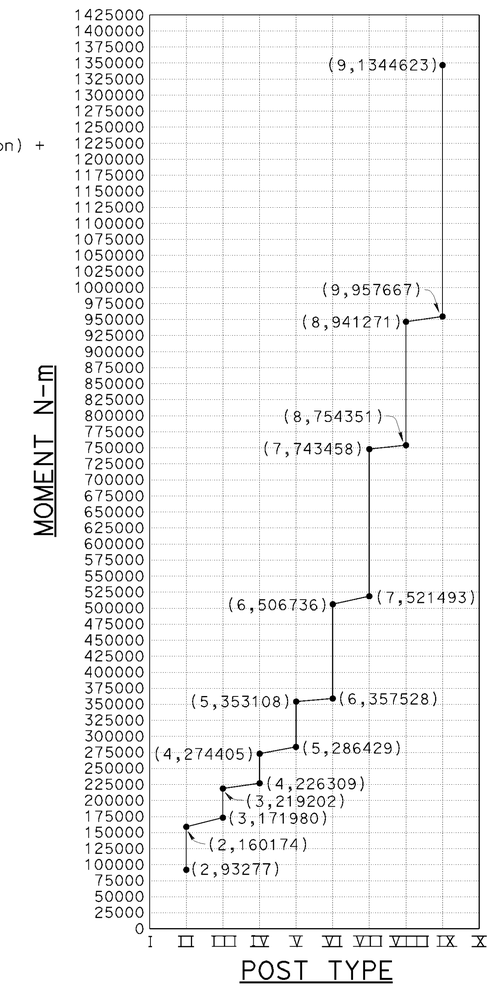

STATE OF CALIFORNIA
DEPARTMENT OF TRANSPORTATION

THIS SHEET NOT A PART OF CONTRACT PLANS

OVERHEAD SIGNS-TRUSS
SINGLE POST TYPE
POST TYPES II THROUGH IX

POST SELECTION CHART II
(Butterfly, cantilever and unbalanced butterfly)

8