CHAPTER 830
TRANSPORTATION FACILITY DRAINAGE

Topic 831 - General

Index 831.1 - Basic Concepts

Roadway drainage involves the collection, conveyance, removal, and disposal of surface water runoff from the traveled way, shoulders, sidewalks, and adjoining areas defined in Index 62.1(7) as comprising the roadway. Roadway drainage is also concerned with the handling of water from the following additional sources:

- Surface water from outside the right of way and not confined to channels that would reach the traveled way if not intercepted.
- Crossroads or streets.
- Irrigation of landscaped areas.

The design of roadway drainage systems often involves consideration of the problems associated with inadequate drainage of the adjacent or surrounding area. Cooperative drainage improvement projects with the responsible local agency may offer the best overall solution. Cooperative agreements are more fully discussed under Index 803.2

Some of the major considerations of good roadway drainage design are:

- Facility user safety.
- Convenience to vehicular, bicycle and pedestrian traffic.
- Aesthetics.
- Flooding of the transportation facility and adjacent property.
- Subgrade infiltration.
- Potential erosion, pollution and other environmental concerns.
- Economy of construction.
- Economy of maintenance.

This section involves the hydraulic design fundamentals necessary for properly sizing and locating standard highway drainage features such as:

- Asphalt dikes and gutters.
- Concrete curbs and gutters.
- Median drains.
- Roadside ditches
- Overside drains.
- Drop inlets.
- Storm drains.

Removal of storm water from highway pavement surfaces and median areas is more fully discussed in FHWA Hydraulic Engineering Circular No. 22, "Urban Drainage Design Manual". HEC 22 includes discussion of the effects of roadway geometry on pavement drainage; the philosophy of design storm frequency and design spread selection; storm runoff estimating methods; pavement and bridge deck inlets; and flow in gutters. Charts and procedures are provided for the hydraulic analysis and design of roadway drainage features.

831.2 Highway Grade Line

In flat terrain, roadway drainage considerations often control the longitudinal grade line of the highway. A grade line that assures the desirable goal of keeping the traveled way free of flooding can usually be established for new freeway projects and rural conventional highways.

For multilane urban highways with nearly continuous dike or curb along the shoulder or parking area, it is seldom practical to design the highway with a gutter section which will contain all of the runoff even from frequent rains. For this reason the gutter and shoulder combination, and often partial or full width of the traveled way, are used to convey the runoff to inlets.

831.3 Design Storm and Water Spread

Before the hydraulic adequacy of roadway drainage facilities can be analyzed, the quantity of water (design Q) that the facility may reasonably be expected to convey must be estimated. The most important, and often the most difficult phase

of this task is the selection of an appropriate design storm frequency for the specific project, location or site under consideration. In order for a design frequency to be meaningful criteria for roadway drainage design, it must be tied to an acceptable tolerance of flooding. Design water spread, encroachment upon the roadbed or adjacent property, is the tolerance of flooding directly related to roadway drainage design. Allowing too little spread is uneconomical in design and too much spread may result in unsafe driving conditions.

To optimize economy in roadway drainage, the allowable water spread should vary, depending on the type of project being designed. Because of the effect of splash and spray on motorist visibility and vehicle control, high volume roads with high speed traffic cannot tolerate as much water spread as urban streets. Likewise, the allowable water spread should be minimized on urban streets where a large number of pedestrians use adjacent sidewalks and pedestrian crosswalks. Consideration should be given to the element of motorist surprise when encountering intermittent puddles rather than a continuous encroachment of water on the driving lane. Eccentric forces are exerted on a vehicle when one side encounters water in the lane and the other side does not.

The probability of exceedance of the design storm and the acceptable tolerance to flooding depends on the importance of the highway and risks involved. Selection of the design storm and water spread parameters on rehabilitation and reconstruction are generally controlled by existing constraints.

In addition to the major roadway drainage considerations previously listed, the following more specific factors are to be considered in establishing the project design storm:

- Highway type
- Traffic volume
- Design speed
- Local standards

The following geometric and design features of the highway directly affect establishment of the project design water spread:

- Cross slope
- Longitudinal slope
- Number of lanes
- Width of shoulders
- Height of curb and dike
- Parking lanes
- Bus/Transit pullouts and loading areas

Desirable limits for water spread with respect to design storm probability of exceedance are given in Table 831.3. The parameters shown are considered minimum roadway drainage design standards for new freeway construction and for all State highways with depressed sections which require pumping. Local conditions may justify less stringent criteria than the table parameters for conventional highways. Exceptions should be documented by memo to the project file.

It is often advantageous, to both the State and the local agency, for highway drainage and street drainage to be compatible. This is particularly true in urban areas and rapidly developing suburban areas where a conventional highway is, or will become, part of the street network. Street drainage criteria adopted by a local agency are generally based on the hydrologic events peculiar to a geographical area. Local drainage standards that satisfy the needs of the community, usually provide reasonable traffic safety and flood risk considerations commensurate with those normally expected for conventional highways in urban areas.

831.4 Other Considerations

(1) Sheet Flow. Concentrations of sheet flow across roadways are to be avoided. As a general rule, no more than 0.10 cubic feet per second should be allowed to concentrate and flow across a roadway. Particular attention should be given to reversal points of superelevation where shoulder and gutter slopes may direct flows across the roadway and gore areas.

(2) Stage Construction. All permanent features of roadway drainage systems should be designed and constructed for the ultimate highway facility.

Table 831.3

Desirable Roadway Drainage Guidelines

HIGHWAY Type/Category/Feature	DESIGN STORM 4% (25 yrs)	DESIGN STORM 10% (10 yrs)	DESIGN WATER SPREAD Shldr or Parking Lane	DESIGN WATER SPREAD 1/2 Outer Lane	DESIGN WATER SPREAD Local Standard
FREEWAYS					
Through traffic lanes, branch connections, and other major ramp connections.	X	--	X	--	--
Minor ramps.	--	X	X	--	--
Frontage roads.	--	X	--	--	X
CONVENTIONAL HIGHWAYS					
High volume, multilane Speeds over 45 mph.	X	--	X	--	--
High volume, multilane Speeds 45 mph and under.	--	X	--	X	--
Low volume, rural Speeds over 45 mph.	X	--	X	--	--
Urban Speeds 45 mph and under.	--	X	--	--	X
ALL STATE HIGHWAYS					
Depressed Sections That Require Pumping:					
Use a 2% (50 yrs) design storm for freeways and conventionalState highways. Design water spread at depressed sections should not exceed that of adjacent roadway sections. A 4% (25 yr) design storm may be used on local streets or road undercrossings that require pumping.					

(3) *Landscaping.* Runoff from existing or proposed landscaping, including excess irrigation water runoff, must be considered.

(4) *Groundwater.* Groundwater is subsurface water within a permeable strata. Depending upon recharge and withdrawal rates the level of the groundwater table can fluctuate greatly, over a period of a few months or over periods of many years. Consideration should be given to recent history (several years of abnormally wet or dry conditions) as well as the possibility of revised practices by local water districts (either increased pumping or increased recharge).

Pipes located in areas where contact with groundwater within their design life is likely should have watertight joints. If groundwater contact is likely and the surrounding soils are highly erodible (fine grained sand, silty sand and sandy silt/silt of limited cohesion) consideration should be given to wrapping the pipe joint with filter fabric. The fabric should cover a length of 4 feet along the pipe, centered on the joint. Groundwater at or above the drainage system elevation will lead to infiltration. Where this is undesirable, either joint systems capable of resisting the hydrostatic pressure, or dewatering measures, should be incorporated into the design. The design of groundwater control measures must be coordinated with Geotechnical Services in the Division of Engineering Services.

(5) *Hydroplaning.* Hydroplaning is the separation of the tire from the road surface by a thin layer of liquid (usually water) on the pavement. The liquid separates the tire from the pavement because of viscosity (viscous hydroplaning), dynamic lift (dynamic hydroplaning), or a combination of the two. Since water offers little shear resistance, the tire loses its tractive ability and the driver has a loss of control of the vehicle. At locations where there is a potential for hydroplaning, a careful review of the wet weather accident rates should be made using information obtained from the District Traffic Branch. Typical situations that should be evaluated for hydroplaning potential are:

* Where three (3) lanes or more are sloped in the same direction (see Topic 833).
* Where the longitudinal grade and or cross slope are less than minimum (Refer to Index 204.3 for minimum grade and Indexes 301.2 and 302.2 for cross slope).
* Where there are poor pavement conditions (rutting, depressions, inadequate roughness).
* Where water is allowed to concentrate prior to being directed across the travel lanes (see Index 831.4(1)).
* Where re-striping projects will reduce shoulder widths where dike, curb or concrete barrier are present.

These situations may also be present on median widening projects or projects involving pavement rehabilitation and or lane addition on multi-lane highways or freeways.

Speed and tire pressure appear to be a significant factors in the occurrence of hydroplaning, therefore, it is considered to be the driver's responsibility to exercise prudence and caution when driving during wet conditions (California Basic Speed Law).

Designers do not have control over all of the factors involved in hydroplaning. However, remedial measures may be included in development of a project to reduce hydroplaning potential. The following is provided as guidance for the designer as practical measures to consider:

(1) Pavement Sheet Flow

- Maximize transverse slope (see Topic 833)
- Maximize pavement roughness
- Use of graded course (porous pavements)

(2) Gutter Flow

- Limit water spread to Table 831.3
- Maximize interception of gutter flow above superelevation transitions (see Index 837.3)

(3) Sag Areas

- Limit pond duration and depth (see Topic 833)

(4) Overtopping

- Avoid overtopping at cross culverts using appropriate freeboard and/or headwater elevation (see Topic 821)

Where suitable measures cannot be implemented to address conditions such as those identified above, or an identified existing problem area, coordination should be made with the Safety Review Committee per Index 110.8.

831.5 Computer Programs

There are many computer programs available to aid highway design engineers with estimating runoff and ensuing hydraulic design and analysis of roadway drainage facilities.

Refer to Table 808.1 for guidance on selecting appropriate software programs for specific analysis needs.

Familiarity with the fundamentals of hydraulics and traditional methods of solution are necessary to assure that the results obtained are reasonable. There is a tendency for inexperienced engineers to accept computer output as valid without verifying the reasonableness of input and output data.

Topic 832 - Hydrology

832.1 Introduction

The philosophy and principles of hydrology are discussed in Chapter 810. Additional information on methods of estimating storm runoff may be found in FHWA's HEC 22.

832.2 Rational Method

With few exceptions, runoff estimates for roadway drainage design are made by using Rational Methods described under Index 819.2(1). In order to make use of these methods, information on the intensity, duration, and frequency of rainfall for the locality of the project must be established. Refer to Index 815.3(3) for further information on precipitation intensity-duration-frequency (IDF) curves that have been developed for many locations in California.

832.3 Time of Concentration

Refer to Index 816.6 for information on time of concentration.

Topic 833 - Roadway Cross Sections

833.1 Introduction

The geometric cross section of the roadway affects drainage features and hydraulic considerations. Cross slope and width of pavement and shoulders as well as other roadway geometry affect the rate of runoff, width of tolerable spread, and hydraulic design considerations. The cross section of drainage features such as, depressed medians, curbs and gutters, dikes, and side ditches is often controlled by an existing roadway geometric cross section or the one selected for new highway construction.

833.2 Grade, Cross Slope and Superelevation

The longitudinal slope or grade is governed by the highway grade line as discussed under Index 831.2. Refer to Index 204.3 for minimum grade and Indexes 301.3 and 302.2 for cross slope. Where three (3) lanes or more are sloped in the same direction, it is desirable to counter the resulting increase in flow depth by increasing the cross slope of the outermost lanes. The two (2) lanes adjacent to the crown line should be pitched at the normal slope, and successive lane pairs, or portions thereof outward, should be increased by about 0.5 to 1 percent. The maximum pavement cross slope should be limited to 4 percent. However, exceptions to the design criteria for cross slope in Index 302.2 must be formally approved in accordance with the requirements Index 82.2, "Approvals for Nonstandard Design." For projects where lanes will be added on the inside of divided highways, or when widening an existing “crowned” 2-lane highway to a 4-lane divided highway, consideration should be given to the use of a “tent section” in order to minimize the number of lanes sloping in the same direction. Refer to Index 301.2. Consideration should be given to increasing cross slopes in sag vertical curves, crest vertical curves, and in sections of flat longitudinal grades. Superelevation is discussed in Topic 202. Refer to Index 831.4 for Hydroplaning considerations.

Topic 834 - Roadside Drainage

834.1 General

Median drainage, ditches and gutters, and overside drains are some of the major roadside drainage facilities.

834.2 Median Drainage

(1) *Drainage Across the Median.* When it is necessary for sheet flow to cross flush medians, it should be intercepted by the use of slotted drains or other suitable alternative facilities. See Standard Plan D98-B for slotted drain details.

Where floodwaters are allowed to cross medians, designers must consider the impacts of railings, barrier or other obstructions to both the depth and spread of flow. Designers should consult their district hydraulic unit for assistance.

(2) *Grade and Cross Slope.* The longitudinal slope or grade for median drainage is governed by the highway grade line as discussed under Index 831.2. Refer to Index 204.3 for minimum grade and Indexes 305.2 and 405.5(4) for standards governing allowable cross slope of medians.

Existing conditions control median grades and attainable cross slope on rehabilitation projects. The flattest desirable grade for earth medians is 0.25 percent and 0.12 percent for paved gutters in the median.

(3) *Erosion.* When velocities are excessive for soil conditions, provisions for erosion control should be provided. See Table 865.2 for recommended permissible velocities for unlined channels.

Economics and aesthetics are to be taken into consideration in the selection of median erosion control measures. Under the less severe conditions, ground covers of natural or synthetic materials which render the soil surface stable against accelerated erosion are adequate. Under the more severe conditions, asphalt or concrete ditch paving may be required.

Whenever median ditch paving is necessary, consideration should be given to the use of cement or lime treatment of the soil. The width treated will depend on the capacity needed to handle the drainage. A depth of 6 inches is generally satisfactory. The amount of cement or lime to be used should be based on laboratory tests of the in-place material to be tested, and normally varies from 6 percent to 10 percent. If a clear or translucent curing compound is used, the completed area is unobtrusive and aesthetically pleasing.

Asphalt concrete ditch paving and soil cement treatments cured with an application of liquid asphalt are highly visible and tend to become unsightly from streaks of eroded material. Cobbles, though effective for erosion control, are not satisfactory in a recovery area for out of control vehicles. See Topic 872 for further discussion on erosion protection and additional types of ditch linings. Erosion control references are given under Index 871.3.

(4) *Economy in Design.* Economy in median drainage can be achieved by locating inlets to utilize available nearby culverts or the collector system of a roadway drainage installation. The inlet capacity can be increased by placing it in a local depression. Use of slotted pipe at sag points where a local depression might be necessary may be an alternative solution to a grate catch basin.

834.3 Ditches and Gutters

(1) *Grade.* The flattest grade recommended for design is 0.25 percent for earth ditches and 0.12 percent for paved ditches.

(2) *Slope Ditches.* Slope ditches, sometimes called surface, brow, interception, or slope protection ditches, should be provided at the tops of cuts where it is necessary to intercept drainage from natural slopes inclined toward the highway.

When the grade of a slope ditch is steep enough that erosion would occur, the ditch should be paved. Refer to Table 865.2 for permissible velocities for unlined channels in various types of soil. When the ditch grade exceeds a 4:1 slope, a downdrain is advisable. Slope ditches may not be necessary where side slopes in favorable soils are flatter than 2:1 or where positive erosion control measures are to be instituted during construction.

(3) Side Gutters. These are triangular gutters adjoining the shoulder as shown in Figures 307.2 and 307.5. The main purpose of the 3 feet wide side gutter is to prevent runoff from the cut slopes on the high side of superelevation from flowing across the roadbeds. The use of side gutters in tangent alignment should be avoided where possible. Local drainage conditions, such as in snow areas, may require their use on either tangent or curved alignment in cut sections. In snow areas it may be necessary to increase the width of side gutters from 3 feet to 6 feet. The slope from the edge of the shoulder to the bottom of the gutter should be no steeper than 6:1. The structural section for paved side gutters should be adequate to support maintenance equipment loads.

(4) Dikes. Dikes placed adjoining the shoulder, as shown in Figures 307.2, 307.4, and 307.5, provide a paved triangular gutter within the shoulder area. For conditions governing their use, see Index 303.3.

(5) Chart Solutions. Charts for solutions to triangular channel flow problems are contained in FHWA Hydraulic Engineering Circular No. 22, "Urban Drainage Design Manual".

834.4 Overside Drains

The purpose of overside drains, sometimes called slope drains, is to protect slopes against erosion. They convey down the slope drainage which is collected from the roadbed, the tops of cuts, or from benches in cut or fill slopes. They may be pipes, flumes or paved spillways.

(1) Spacing and Location. The spacing and location of overside drains depend on the configuration of the ground, the highway profile, the quantity of flow and the limitations on flooding stated in Table 831.3. When possible, overside drains should be positioned at the lower end of cut sections. Diversion from one watershed to another should be avoided. If diversion becomes necessary, care should be used in the manner in which this diverted water is disposed.

Overside drains which would be conspicuous or placed in landscaped areas should be concealed by burial or other means.

(2) Type and Requirement. Following are details of various types of overside drains and requirements for their use:

(a) Pipe Downdrains. Metal and plastic pipes are adaptable to any slope. They should be used where side slopes are 4:1 or steeper. Long pipe downdrains should be anchored.

The minimum pipe diameter is 8 inches but large flows, debris, or long pipe installations may dictate a larger diameter.

Watertight joints are necessary to prevent leakage which causes slope erosion. Economy in long, high capacity downdrains is achieved by using a pipe taper in the initial reach. Pipe tapers should insure improved flow characteristics and permit use of a smaller diameter pipe below the taper. See Standard Plan D87-A for details.

(b) Flume Downdrains. These are rectangular corrugated metal flumes with a tapered entrance. See the Standard Plan D87-D for details. They are best adapted to slopes that are 2:1 or flatter but if used on 1.5:1 slopes, lengths over 60 feet are not recommended. Abrupt changes in alignment or grade should be avoided. Flume downdrains should be depressed so that the top of the flume is flush with the fill slope.

(c) Paved Spillways. Permanent paved spillways should only be used when the side slopes are flatter than 4:1. On steeper slopes a more positive type of overside drain such as a pipe downdrain should be used.

Temporary paved spillways are effective in preserving raw fill slopes that are 6:1 or flatter in friable soils during the period when protective growth is being established. Paved spillways should be spaced so that a dike 2 inches high placed at the outer edge of the paved shoulder will effectively confine drainage between spillways. When it is necessary to place a spillway on curved alignment, attention must be given to possible overtopping at the bends. See Index 868.2(3) for

discussion of superelevation of the water surface.

(3) *Entrance Standards.* Entrance tapers for pipes and flume downdrains are detailed on the Standard Plans. Pipe entrance tapers should be depressed at least 6 inches.

The local depressions called "paved gutter flares" on the Standard Plans are to be used at all entrance tapers. See Standard Plans D87-A and D87-D for details and Index 837.5 for further discussion on local depressions.

In areas where local depressions would decrease safety the use of flush grate inlets or short sections of slotted drain for entrance structures may be necessary.

(4) *Outlet Treatment.* Where excessive erosion at an overside drain outlet is anticipated, a simple energy dissipater should be employed. Preference should be given to inexpensive expedients such as an apron of broken concrete or rock, a short section of pipe placed with its axis vertical with the lowermost 6 inches filled with coarse gravel or rock, or a horizontal tee section which is usually adequate for downdrain discharges.

(5) *Anchorage*. For slopes flatter than 3:1 overside drains do not need to be anchored. For slopes 3:1 or steeper overside drains should be anchored with 6 foot pipe stakes as shown on the Standard Plans to prevent undue strain on the entrance taper or pipe ends. For drains over 150 feet long, and where the slope is steeper than 2:1, cable anchorage should be considered as shown on the Standard Plans. Where the cable would be buried and in contact with soil, a solid galvanized rod should be used the buried portion and a cable, attached to the rod, used for the exposed portion. Beyond the buried portion, a slip joint must be provided when the installation exceeds 60 feet in length. Regard-less of pipe length or steepness of slope, where there is a potential for hillside movement cable anchorage should be considered.

When cable anchorage is used as shown on the Standard Plans, the maximum allowable downdrain lengths shall be 200 feet for a slope of 1.5:1 and 250 feet for a slope of 2:1. For pipe diameters greater than 24 inches, or downdrains to be placed on slopes steeper than 1.5:1, special designs are required. Where there is an abrupt change in direction of flow, such as at the elbow or a tee section downstream of the end of the cable anchorage system, specially designed thrust blocks should be considered.

(6) *Drainage on Benches.* Drainage from benches in cut and fill slopes should be removed at intervals ranging from 300 feet to 500 feet.

(7) *Selection of Types.* Pipe and flume downdrains may consist of either corrugated steel, corrugated aluminum, or any other approved material that meets the minimum design service life required under Chapter 850. Refer to Index 855.2 for additional discussion on limitations of abrasive resistance of aluminum pipe culverts.

Topic 835 - Dikes and Berms

835.1 General

Dikes and berms are to be used only as necessary to confine drainage and protect side slopes susceptible to erosion.

835.2 Earth Berms

(Text Later)

835.3 Dikes

Details of dikes are shown on Standard Plan A87. See Topic 303 for a detailed discussion on the types and placement considerations for dikes.

Topic 836 - Curbs and Gutters

836.1 General

The primary reason for constructing curbs and gutters may be for delineation or pedestrian traffic rather than for drainage considerations. Refer to Topic 303 for further discussion and Standard Plan A87 for details on concrete curbs and gutters.

Whatever the justification for constructing curbs and gutters, they will usually have an effect on surface water runoff and result in becoming a roadway drainage design consideration.

836.2 Gutter Design

(1) *Capacity.* Gutters and drainage facilities are to be designed to keep flooding within the limits given in Table 831.3. Easy solutions to gutter flow problems can be obtained by using the charts contained in FHWA Hydraulic Engineering Circular No. 22, "Urban Drainage Design Manual" which applies to triangular channels and other shapes illustrated in the charts. Parked cars reduce gutter capacity and also can cause water to shoot over the curb. The downstream ends of driveway ramps can also cause water to flow over the curb. As a rule of thumb, gutter capacity should be determined on a depth equal to 0.5 the curb height for grades up to 10 percent and 0.4 the curb height for grades over 10 percent in locations where parking is allowed or where driveways are constructed.

(2) *Grade and Cross Slope.* The longitudinal grade of curbs and gutters is controlled by the highway grade line as discussed under Index 831.2.

The cross slope of standard gutters is typically 8.33 percent toward the curb. Pavement slopes on superelevated roadways extend the full width of the gutter, except that gutter slopes on the low side should be not less than 8.33 percent. Because they cut down gutter capacity and severely reduce inlet efficiency, cross slopes flatter than 8.33 percent should be avoided, except where gutters are adjacent to curb ramps where ADA requirements limit the slope to a maximum of 5 percent.

(3) *Curbed Intersections.* If pedestrian traffic is a ruling factor, intersection drainage presents the following alternatives to be weighed as to effectiveness and economy.

(a) Intercept the whole flow upstream of the crosswalk.

(b) Intercept a part of the water and allow the overflow to cross the intersection. The width of flow should be controlled so that pedestrian traffic is not unduly hampered.

(c) If flow is small, pass the entire flow across the intersecting street in a valley gutter.

(4) *Valley Gutters.* Valley gutters across the traveled way of the highway should not be used. Valley gutters may be used across intersecting streets and driveways, however, at intersections with high traffic volumes on all approaches, it is desirable to intercept all gutter flow upstream of the intersection and avoid the use of valley gutters. Valley gutters are also undesirable along streets where speeds are relatively high. In locations of frequent intermittent low flows, the use of valley gutters with slotted drains should be considered. In general, the total width of gutters should not exceed 6 feet and cross slopes should not exceed 3 percent. Two percent is suggested where more than nominal speeds are involved.

Topic 837 - Inlet Design

837.1 General

The basic features of standard storm drain inlets are shown in Figure 837.1. Full details appear on Standard Plan D72 through D75, D98-A and D98-B. The variety of standard designs available is considered sufficient to any drainage situation; hence, the use of nonstandard inlets should be rare.

837.2 Inlet Types

From an operating standpoint, there are five main groups of inlets; these are:

(1) *Curb-Opening.* Curb opening inlets have an opening parallel to the direction of flow in the gutter. This inlet group is adapted to curb and gutter installations. The curb opening is most effective with flows carrying floating debris. As the gutter grade steepens, their interception capacity decreases. Hence, they are commonly used on grades flatter than 3 percent.

When curb opening inlets are used on urban highways other than fenced freeways, a 3/4 inch plain round protection bar is placed horizontally across any curb or wall opening whose height is 7 inches or more. The unsupported length of bar should not exceed 7 feet. Use of the protection bar on streets or roads under other jurisdiction is to be governed by the desires of the responsible authorities.

The Type OS and OL inlets are only used with Type A or B curbs. A checkered steel plate cover is provided for maintenance access.

The Type OS inlet has a curb opening 3.5 feet long. Since a fast flow tends to overshoot such a short opening, it should be used with caution on grades above 3 percent.

The Type OL inlet is a high capacity unit in which the length of curb opening ranges from 7 feet to 21 feet.

(2) Grate. Grate inlets provide a grate opening in the gutter or waterway. As a class, grate inlets perform satisfactorily over a wide range of gutter grades. Their main disadvantage is that they are easily clogged by floating trash and should not be used without a curb opening where total interception of flow is required. They merit preference over the curb opening type on grades of 3 percent or more. Gutter depressions, discussed under Index 837.5, increase the capacity of grate inlets. Grate inlets may also be used at locations where a gutter depression is not desirable. See the Standard Plans for grate details.

Locate grate inlets away from areas where bicycles or pedestrians are anticipated whenever possible. Grate designs that are allowed where bicycle and pedestrian traffic occurs have smaller openings and are more easily clogged by trash and debris and are less efficient at intercepting flow. Additional measures may be necessary to mitigate the increased potential for clogging.

The grate types depicted on Standard Plan D77B must be used if bicycle traffic can be expected. Many highways do not prohibit bicycle traffic, but have inlets where bicycle traffic would not be expected to occur (e.g., freeway median). In such instances, the designer may consider use of grates from Standard Plan D77A. The table of final pay weights on Standard Plan D77B indicates the acceptable grate types to be used for each listed type of inlet.

If grate inlets must be placed within a pedestrian path of travel, the grate must be compliant with the Americans with Disabilities Act (ADA) regulations which limit the maximum opening in the direction of pedestrian travel to no more than 0.5 inch. Presently, the only standard grating which meets such restrictive spacing criterion is the slotted corrugated steel pipe with heel guard, as shown in the Standard Plans. Because small openings have an increased potential for clogging, a minimum clogging factor of 50 percent should be assumed; however,that factor should be increased in areas prone to significant debris. Other options which may be considered are grated line drains with specialty grates (see the Standard Plans for grated line drain details, and refer to manufacturers catalogs for special application grates) or specially designed grates for standard inlets. The use of specially designed grates is a nonstandard design that must be approved by the Office of State Highway Drainage Design prior to submittal of PS&E.

(3) Combination. Combination inlets provide both a curb opening and a grate. These are high capacity inlets which make use of the advantages offered by both kinds of openings.

(a) Type GO and GDO. These types of inlets have a curb opening directly opposite the grate. The GDO inlet has two grates placed side by side and is designed for intercepting a wide flow. A typical use of these inlets would be in a sag location either in a curb and gutter installation or within a shoulder fringed by a dike.When usedas the surface inlet for a pumping installation, the trash rack shownontheStandardPlanD74Bisprovided.

(b) Type GOL. This is called a sweeper inlet because the curb opening precedes the grate. It is particularly useful as a trash interceptor during the initial phases of a storm. When used in a grade sag, the sweeper inlet can be modified by providing a curb opening on both sides of the grate.

(4) Pipe. Pipe drop inlets are made of a commercial pipe section of concrete or corrugated metal. As a class, they develop a high capacity and are generally the most economical type. This type of inlet is intended for uses outside the roadbed at locations that

will not be subjected to normal highway wheel loads.

Two kinds of inlets are provided; a wall opening and a grate top. The wall opening inlet should only be used at protected locations where it is unlikely to be hit by an out of control vehicle.

(a) Wall Opening Intake. This opening is placed normal to the direction of surface flow. It develops a high capacity unaffected by the grade of the approach waterway. The inlet capacity is increased by depressing the opening; also by providing additional openings oriented to intercept flows from different directions. When used as the surface intake to a pumping installation, a trash rack across the opening is required. See Standard Plans for pipe inlet details. Because this type of inlet projects above grade, its use should be avoided in areas subject to traffic leaving the roadway.

(b) Grate Intake. The grate intake intercepts water from any direction. For maximum efficiency, however, the grate bars must be in the direction of greatest surface flow. Being round, it is most effective for flows that are deepest at the center, as in a valley median.

(5) Slotted Drains. This type of inlet is made of corrugated metal or polyethylene pipe with a continuous slot on top. This type of inlet can be used in flush, all paved medians with superelevated sections to prevent sheet flow from crossing the centerline of the highway. Short sections of slotted drain may be used as an alternate solution to a grate catch basin in the median or edge of shoulder.

Drop inlets or other type of cleanout should be provided at intervals of about 100 feet.

*(6) Grated Line Drains.*This type of inlet is made of monolithic polymer concrete with a ductile iron frame and grate on top. This type of inlet can be used as an alternative at the locations described under slotted drains, preferably in shoulder areas away from traffic loading. However, additional locations may include localized flat areas of pavement at private and public intersections, superelevation transitions, along shoulders where widening causes a decrease to allowable water spread, tollbooth approaches, ramp termini, parking lots and on the high side of superelevation in snow and ice country to minimize black ice and sheet flow from snow melt. Removable grates should not be placed where subject to traffic.

Short sections of grated line drain may be used in conjunction with an existing drainage inlet as a supplement in sag locations. However, based on the depth of the water, the flow condition will be either weir or orifice. The transition between weir and orifice occurs at approximately 7 inches depth of flow. The HEC-22 method of design for slotted pipe is recommended as the basis for grated line drain design. It should be noted that this is inlet interception/capacity design, not the carrying capacity of the product as a conduit.

Furthermore, the grated line drain has a smaller cross sectional area than slotted pipe, and therefore typically less carrying capacity.

Grated line drains are recommended as an alternative to slotted pipe at locations susceptible to pipe clogging from sediments and debris. Self-cleaning velocities can usually be generated from their smooth interior surface, or if necessary by specifying the optional pre-sloped sections.

Grated line drains may also be useful where there is a potential for utility conflicts with slotted drains, which are generally installed at a greater depth.

At locations where clean out access is needed, removable grates can be specified. In areas with pedestrian traffic, special grates which meet the Americans with Disabilities Act (ADA) requirements are mandatory. This type of grate is susceptible to clogging, therefore removable grates are recommended at these locations, and they should only be specified when placement directly within the pedestrian path of travel is unavoidable.

(7) Scuppers. This type of inlet consists of a low, rectangular slot cut through the base of a barrier. Similar to, but smaller than curb opening inlets (See Index 837.2(1)), scuppers

Figure 837.1
Storm Drain Inlet Types

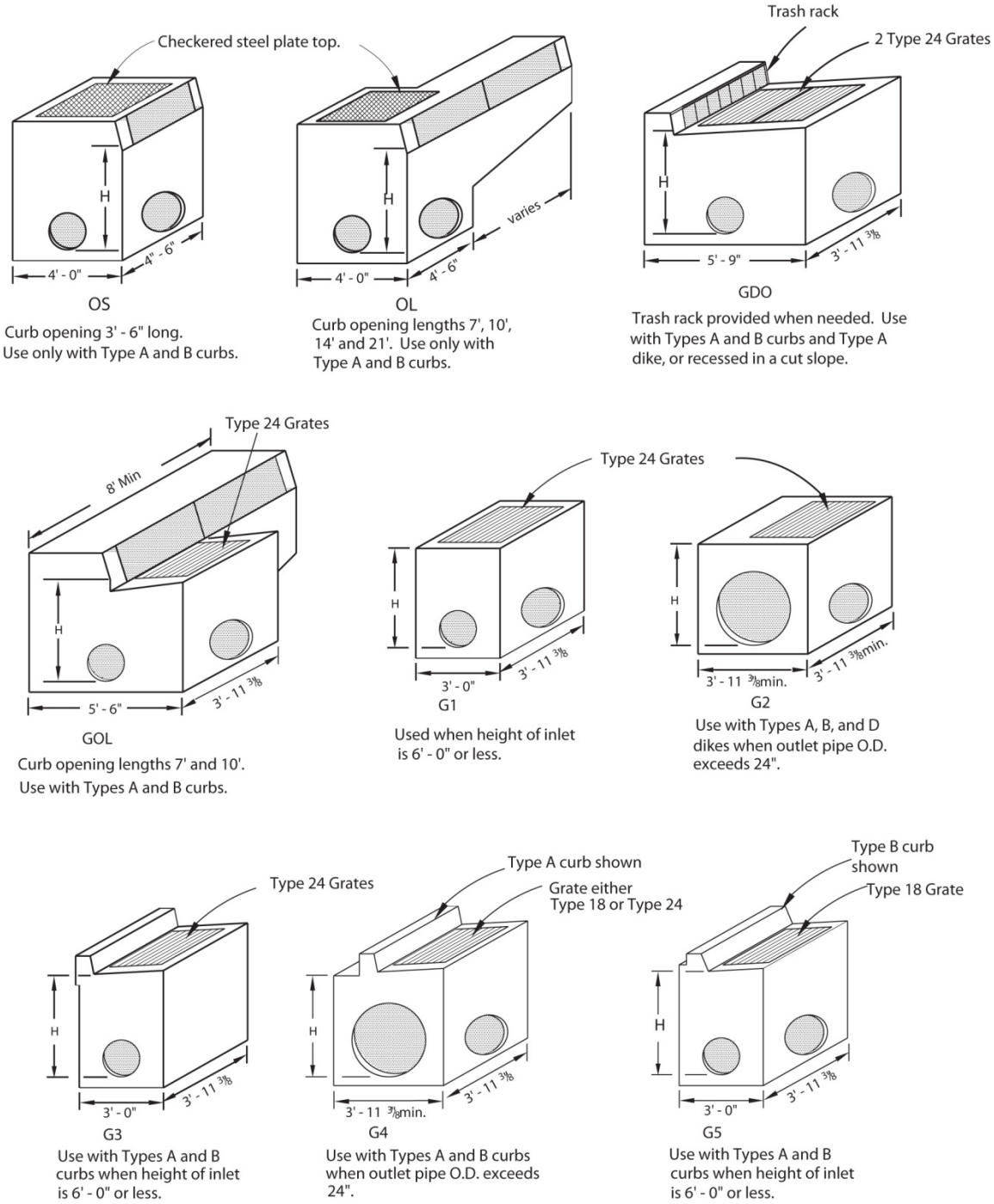

NOTES:
1. All dimensions are outside dimensions based on 6" wall thickness.
2. For full details on uses according to type, see Index 837.2.
3. H = height of inlet.
4. See Standard Plans for Details.
5. Grates shown are not bicycle proof nor ADA compliant.

Figure 837.1

Storm Drain Inlet Types (Cont.)

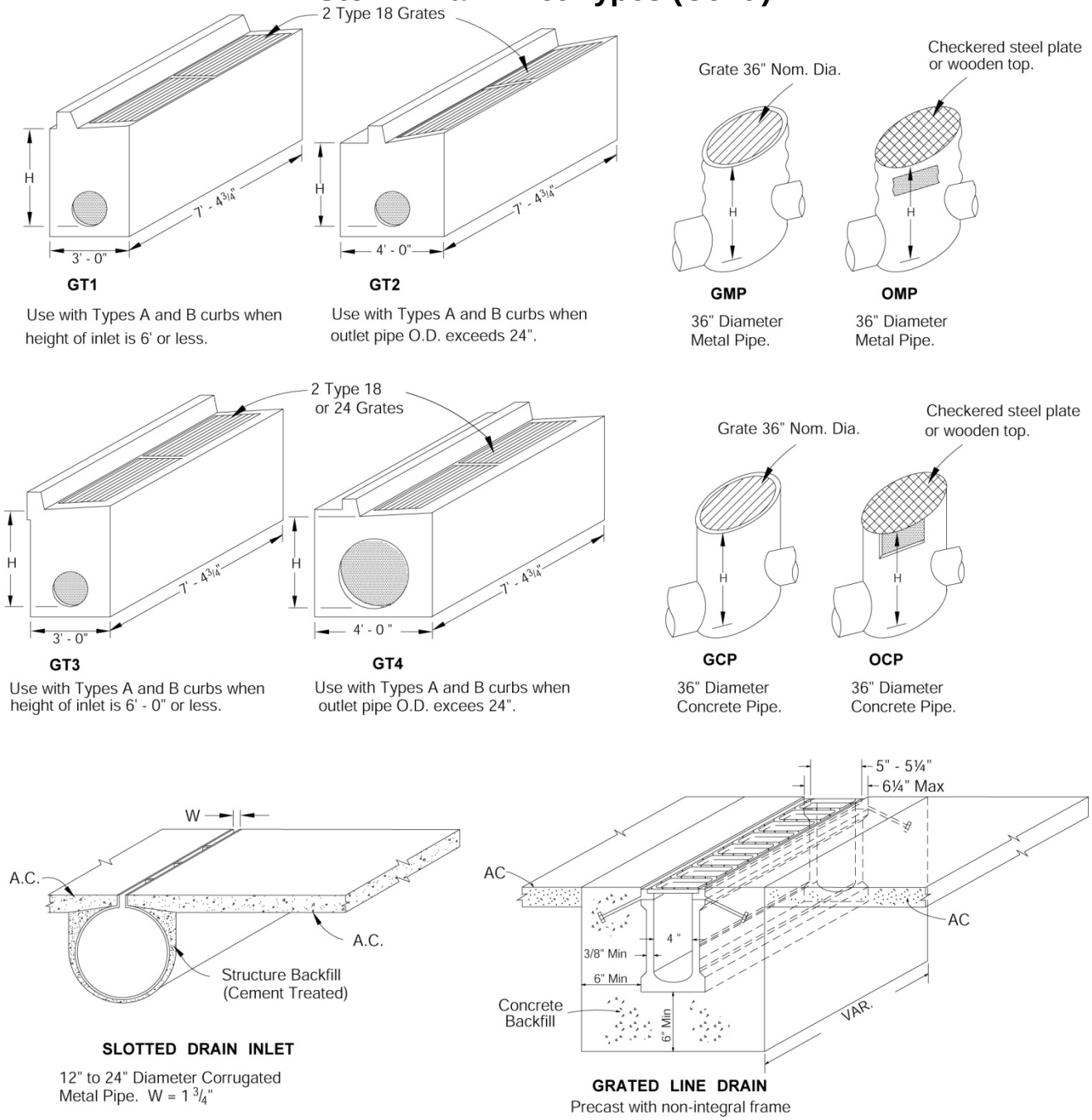

NOTES:
1. All dimensions are outside dimensions based on 6" wall thickness.
2. For full details on uses according to type, see Index 837.2.
3. H = height of inlet.
4. See Standard Plans for Details.

are prone to clogging by sediment and debris and require enhanced maintenance attention. Scupper interception efficiency decreases with increased longitudinal gradient and scupper design is not typically compatible with construction of an inlet depression. Scuppers are typically considered only when other inlet options are infeasible.

837.3 Location and Spacing

(1) Governing Factors. The location and spacing of inlets depend mainly on these factors:

(a) The amount of runoff,

(b) The longitudinal grade and cross slope,

(c) The location and geometrics of interchanges and at-grade intersections,

(d) Tolerable water spread, see Table 831.3,

(e) The inlet capacity,

(f) Accessibility for maintenance and inspection,

(g) Volume and movements of motor vehicles, bicycles and pedestrians,

(h) Amount of debris, and

(i) The locations of public transit stops.

(2) Location. There are no ready rules by which the spacing of inlets can be fixed; the most effective and economical installation should be the aim.

The following are locations where an inlet is nearly always required:

- Sag points
- Points of superelevation reversal
- Upstream of ramp gores
- Upstream and downstream of bridges – bridge drainage design procedure assumes no flow onto bridge from approach roadway, and flow off bridge to be handled by the district.
- Intersections
- Upstream of pedestrian crosswalks
- Upstream of curbed median openings

In urban areas, the volume and movements of vehicles, bicyclists, and pedestrians constitute an important control. For street or road crossings, the usual inlet location is at the intersection at the upstream end of the curb or pavement return and clear of the pedestrian crosswalk. Where the gutter flow is small and vehicular, bicycle, and pedestrian traffic are not important considerations, the flow may be carried across the intersection in a valley gutter and intercepted by an inlet placed downstream. See Index 836.2(4).

At depressed grade lines under structures, care must be taken to avoid bridge pier footings. See Index 204.6.

Safety of location for maintenance purposes is an important consideration. Wall opening inlets should not be placed where they present an obstacle to maintenance equipment and to vehicles that leave the traveled way. Grate top inlets should be installed in such locations.

Placement of inlets within the traveled way is discouraged. Inlets should typically be relocated when roadways are widened or realigned. Any proposal to leave an existing or construct a new inlet within the traveled way should be discussed with District Maintenance to verify that future access is feasible.

(3) Spacing. Arbitrary spacing of inlets should be avoided. The distance between inlets should be determined by a rational analysis of the factors mentioned above. Detailed procedures for determining inlet spacing are given in FHWA Hydraulic Engineering Circular No. 22, "Urban Drainage Design Manual". In a valley median, the designer should consider the effect of inlet spacing on flow velocities where the soil is susceptible to erosion. To economize on disposal facilities, inlets are often located at culverts or near roadway drainage conduits.

(4) Inlets in Series. Where conditions dictate the need for a series of inlets, the recommended minimum spacing should be approximately 20 feet to allow the bypass flow to return to the curb face.

837.4 Hydraulic Design

(1) Factors Governing Inlet Capacity. Inlet capacity is a variable which depends on:

(a) The size and geometry of the intake opening,

(b) The velocity and depth of flow and the gutter cross slope just upstream from the intake, and

(c) The amount of depression of the intake opening below the flow line of the waterway.

(2) General Notes.

(a) Effect of Grade Profile. The grade profile affects both the inlet location and its capacity. The gutter grade line exerts such an influence that it often dictates the choice of inlet types as well as the gutter treatment opposite the opening. See Index 831.2.

Sag vertical curves produce a flattening grade line which increases the width of flow at the bottom. To reduce ponding and possible sedimentation problems, the following measures should be considered:

- Reduce the length of vertical curve.
- Use a multiple installation consisting of one inlet at the low point and one or more inlets upstream on each side. Refer to HEC 22 for further discussion and design procedures for locating multiple inlets.

  Short sections of slotted or grated line drains on either side of the low point may be used to supplement drop inlets.

(b) Cross Slope for Curbed Gutters. Make the cross slope as steep as possible within limits stated under Index 836.2(2). This concentrates the flow against the curb and greatly increases inlet capacity.

(c) Local Depressions. Use the maximum depression consistent with site conditions; for further details see Index 837.5.

(d) Trash. The curb-opening type inlet, when the first in a series of grate inlets, may intercept trash and improve grate efficiency. In a grade sag, one trash interceptor should be used on each side of the sump.

(e) Design Water Surface Within the Inlet. The crown of the outlet pipe should be low enough to allow for pipe entrance losses plus a freeboard of 0.75 feet between the design water surface and the opening at the gutter intake. This allows sufficient margin for turbulence losses, and the effects of floating trash.

(f) Inlet Floor. The inlet floor should generally have a substantial slope toward the outlet. In a shallow drain system where conservation of head is essential, or any system where the preservation of a nonsilting velocity is necessary, the half round floor shown on the Standard Plan D74C should be used when a pipe continues through the inlet.

(g) Partial Interception. Economies may be achieved by designing inlets for partial interception with the last one or two inlets in series intercepting the remaining flow. See Hydraulic Engineering Circular No. 22.

(3) Curb-Opening Inlets. Gutter depressions should be used with curb-opening inlets. The standard gutter depressions for curb-opening inlets, shown on Standard Plan D78 are 0.1 foot and 0.25 foot deep.

Curb-opening inlets are most economical and effective if designed and spaced to intercept only 85 to 90 percent of the flow. This provides for an increased flow depth at the curb face.

Figure 4-11, "Comparison of Inlet Interception Capacity, Slope Variable", and Figure 4-12, "Comparison of Inlet Interception Capacity, Flow Rate Variable" of Hydraulic Engineering Circular No. 22 can be used to obtain interception capacities for various longitudinal grades, cross slopes, and gutter depressions. Charts for determining interception capacities under sump conditions are also available in HEC No. 22.

(4) *Grate Inlets.* The grate inlet interception capacity is equal to the sum of the frontal flow (flow over the grate) interception and the side flow interception. The frontal flow interception will constitute the major portion of the grate interception. In general, grate inlets will intercept all of the frontal flow until a velocity is reached at which water begins to splash over the grate. Charts provided in HEC 22 can be used to compute grate interception capacities for the various grates contained therein. Grate depressions will greatly increase inlet capacity.

The HEC 22 charts neglect the effects of debris and clogging on inlet capacity. In some localities inlet clogging from debris is extensive, while in other locations clogging is negligible. Local experience should dictate the magnitude of the clogging factor, if any, to be applied. In the absence of local experience, design clogging factors of 33 percent for freeways and 50 percent for city streets may be assumed.

Grate type inlets are most economical and effective if designed and spaced to intercept only 75 to 80 percent of the gutter flow.

(5) *Combination Inlets.*

(a) Type GO and GDO Inlet. For design purposes, only the capacity of the grates need be considered. The auxiliary curb opening, under normal conditions, offers little or no increase in capacity; but does act as a relief opening should the grate become clogged. Since the grates of Type GDO are side by side, the inlet capacity is the combined capacity of the two grates.

(b) Type GOL Inlet. The interception capacity of this inlet, a curb-opening upstream of a grate, is equal to the sum of the capacities for the two inlets except that the frontal flow and thus interception capacity of the grate is reduced by interception at the curb opening.

(6) *Pipe Drop Inlets.*

(a) Wall Opening Intake. The standard intake opening 2 feet wide and 8 inches to 12 inches deep provides a capacity of approximately 6.0 CFS when the water surface is 1 foot higher than the lip of the opening. Where the flow is from more than one direction, two or more standard openings may be provided. Higher capacity openings larger than standard may be provided but are of a special design.

(b) Grate Intake. The choice between inlets with a round grate (Types GCP and GMP) and those with a rectangular grate (Type G1) hinges largely on hydraulic efficiency. In a waterway where the greatest depth of flow is at the center, both grates are equally effective. In a waterway where the cross slope concentrates the flow on one side of the grate, the rectangular shape is preferred. For rectangular grates, the charts contained in HEC 22 can be used to compute flow intercept. Round grates (Type 36R) with 0.5 foot of depression develop a capacity of 12 CFS to 15 CFS.

837.5 Local Depressions

(1) *Purpose.* A local depression is a paved hollow in the waterway shaped to concentrate and direct the flow into the intake opening and increases the capacity of the inlet. In a gutter bordered by a curb, it is called a gutter depression.

(2) *Requirements.* Local depressions generally consist of a paved apron or transition of a shape which serves the purpose. Local depressions should meet the following requirements:

(a) Valley Medians. In medians on a grade, the depression should extend a minimum of 10 feet upstream, 6 feet downstream and 6 feet laterally, measured from the edge of the opening. In a grade sag, the depression should extend a minimum of 10 feet on all sides. No median local depression, however should be allowed to encroach on the shoulder area.

The normal depth of depression is 4 inches.

(b) Paved Gutter Flares. The local depression which adjoins the outer edge of shoulder at the entrance to overside downdrains and spillways is labeled "paved gutter flare" on Standard Plans D87-A and D87-D. The

flow line approaching the inlet is depressed to increase capacity and minimize water spread on the roadbed. Within a flare length of 10 feet the gutter flow line is depressed a minimum of 6 inches at the inlet. Recommended flare lengths for various gutter flow line depression depths are given on the Standard Plans. When conditions warrant, these flare lengths may be exceeded.

Traffic safety should not be compromised for hydraulic efficiency. Any change in the shape of the paved gutter flare that will result in a depression within the shoulder area should not be made. The Type 2 entrance taper and paved gutter flare is intended for use on divided highways where gutter grades exceed 2 percent and flow is in the opposite direction of traffic.

(c) Roadside Gutter and Ditch Locations. Regardless of type of intake, the opening of a drop inlet in a roadside gutter or ditch should be depressed from 4 inches to 6 inches below the flow line of the waterway with 10 feet of paved transition upstream.

(d) Curb and Gutter Depressions. This type of depression is carefully proportioned in length, width, depth, and shape. To best preserve the design shape, construction normally is of concrete. Further requirements for curb and gutter depressions are:

- Length - As shown on Standard Plan D78.
- Width - Normally 4 feet, but for wide flows or a series of closely spaced inlets, 6 feet is authorized.
- Depth - Where traffic considerations govern, the depth commonly used is 0.1 foot. Use the maximum of 0.25 foot wherever feasible at locations where the resulting curb height would not be objectionable.

(e) Type of Pavement. Local depressions outside the roadbed are usually surfaced with asphalt concrete 0.15 foot thick.

(3) General Notes on Design. Except for traffic safety reasons, a local depression is to be provided at every inlet even though the waterway is unpaved. Where the size of intake opening is a question, a depression of maximum depth should be considered before deciding on a larger opening. For traffic reasons, the gutter depression should be omitted in driveways and median curb and gutter installations.

It is permissible to omit gutter depressions at sump inlets where the width of flow does not exceed design water spread.

Topic 838 - Storm Drains

838.1 General

The total drainage system which conveys runoff from roadway areas to a positive outlet including gutters, ditches, inlet structures, and pipe is generally referred to as a storm drain system. In urban areas a highway storm drain often augments an existing or proposed local drainage plan and should be compatible with the local storm drain system.

This section covers the hydraulic design of the pipe or enclosed conduit portion of a storm drain system.

838.2 Design Criteria

To adequately estimate design storm discharges for a storm drain system in urban areas involving street flooding it may be necessary to route flows by using hydrograph methods. Hydrographs are discussed under Index 816.5 and further information on hydrograph methods may be found in Chapters 6 and 7 of HDS No.2, Highway Hydrology.

838.3 Hydraulic Design

Closed conduits should be designed for the full flow condition. They may be allowed to operate under pressure, provided the hydraulic gradient is 0.75 foot or more below the intake lip of any inlet that may be affected. The energy gradient should not rise above the lip of the intake. Allowances should be made for energy losses at bends, junctions and transitions.

To determine the lowest outlet elevation for drainage systems which discharge into leveed channels or bodies of water affected by tides, consideration should be given to the possibilities of backwater. The effect of storm surges (e.g., winds and floods) should be considered in addition to the predicted tide elevation.

Normally, special studies will be required to determine the minimum discharge elevation consistent with the design discharge of the facility.

838.4 Standards

(1) Location and Alignment. Longitudinal storm drains are not to be placed under the traveled way of highways. Depending upon local agency criteria, storm drains under the traveled way of other streets and roads may be acceptable. A manhole or specially designed junction structure is usually provided at changes in direction or grade and at locations where two or more storm drains are joined. Refer to Index 838.5 for further discussion on manholes and junction structures.

(2) Pipe Diameter. The minimum pipe diameter to be used is given in Table 838.4.

(3) Slope. The minimum longitudinal slope should be such that when flowing half full, a self cleaning velocity of 3 feet per second is attained.

(4) Physical Properties. In general, the considerations which govern the selection of culvert type apply to storm drain conduits. Alternative types of materials, overfill tables and other physical factors to be considered in selecting storm drain conduit are discussed under Chapter 850.

(5) Storage. In developing the most economical installation, the designer should not overlook economies obtainable through the use of pipeline storage and, within allowable limits, the ponding of water in gutters, medians and interchange areas. Inlet capacity and spacing largely control surface storage in gutters and medians; inlet capacity governs in sump areas.

Table 838.4
Minimum Pipe Diameter for Storm Drain Systems

Type of Drain	Minimum Diameter (in)
Trunk Drain	18
Trunk Laterals	15[(1)]
Inlet Laterals	15[(1)]

NOTE:
(1) 18 minimum if wholly or partly under the roadbed.

Specific subjects for special consideration are:

* Bedding and Backfill. Bedding and backfill consideration are discussed under Index 829.2. Maximum height of cover tables are included in Chapter 850 and minimum thickness of cover is given in Table 856.5.

* Roughness Factor. The roughness factor, Manning's n value, generally assumes greater importance for storm drain design than it does for culverts. Suggested Manning's n values for various types of pipe materials are given in Table 852.1.

(6) Floating Trash. Except at pumping installations, every effort should be made to carry all floating trash through the storm drain system. Curb and wall opening inlets are well suited for this purpose. In special cases where it is necessary to exclude trash, as in pumping installations, a standard trash rack must be provided across all curb and wall openings of tributary inlets. See the Standard Plans for details.

(7) Median Flow. In estimating the quantity of flow in the median, consideration should be given to the effects of trash, weeds, and plantings.

838.5 Appurtenant Structures

(1) Manholes.

(a) General Notes. The purpose of a manhole is to provide access to a storm drain for inspection and maintenance. Manholes are usually constructed out of cast in place concrete, pre-cast concrete, or corrugated metal pipe. They are usually circular and approximately three or four feet in diameter to facilitate the movement of maintenance personnel.

There is no Caltrans Standard Plan for manholes. Relocation and reconstruction of existing storm drain facilities, owned by a city or county agency, is often necessary. Generally the local agency has adopted manhole design standard for use on their facilities. Use of the manhole design preferred by the responsible authority or owner is appropriate.

Commercial precast manhole shafts are effective and usually more economical than cast in place shafts. Brick or block may also be used, but only upon request and justification from the local agency or owner.

(b) Location. Following are common locations for manholes:

- Where two or more drains join,
- At locations and spacing which facilitate maintenance,
- Where the drain changes in size,
- At sharp curves or angle points in excess of 10 degrees,
- Points where an abrupt flattening of the grade occurs, and
- On the smaller drains, at the downstream end of a sharp curve.

Manholes are not required if the conduit is large enough to accommodate a man, unless spacing criteria govern. Manholes should not be placed within the traveled way. Exceptions are frontage roads and city streets, but intersection locations should be avoided.

(c) Spacing. In general, the larger the storm drain, the greater the manhole spacing. For pipe diameter of 48 inches or more, or other shapes of equal cross sectional area, the manhole spacing ranges from 700 feet to 1200 feet. For diameters of less than 48 inches, the spacing may vary from 300 feet to 700 feet. In the case of small drains where self-cleaning velocities are unobtainable, the 300 feet spacing should be used. With self-cleaning velocities and alignments without sharp curves, the distance between manholes should be in the upper range of the above limits.

(d) Access Shaft. For drains less than 48 inches in diameter, the access shaft is to be centered over the drain. When the drain diameter exceeds the shaft diameter, the shaft should be offset and made tangent to one side of the pipe for better location of the manhole steps. For drains 48 inches or more in diameter, where laterals enter from both sides of the manhole, the offset should be toward the side of the smaller lateral. See Standard Plan D93A for riser connection details.

(e) Arrangement of Laterals. To avoid unnecessary head losses, the flow from laterals which discharge opposite each other should converge at an angle in the direction of flow. If conservation of head is critical, a training wall should be provided.

(2) Junction Structures. A junction structure is an underground chamber used to join two or more conduits, but does not provide direct access from the surface. It is designed to prevent turbulence in the flow by providing a smooth transition. This type of structure is usually needed only where the trunk drain is 42 inches or more in diameter. A standard detailsheet of a junction structure is available for pipes ranging from 42 inches to 84 inches in diameter at the following Office Engineer web site address: http://www.dot.ca.gov/hq/esc/structures_cadd/XS_sheets/Metric/dgn/. The XS sheet reference is XS 4-26. Where required by spacing criteria, a manhole should be used.

(3) *Flap Drainage gates.* When necessary, backflow protection should be provided in the form of flap drainage gates. These gates offer negligible resistance to the release of water from the system and their effect upon the hydraulics of the system may be neglected.

If the outlet is subject to floating debris, a shelter should be provided to prevent the debris from clogging the flap drainage gate. Where the failure of a flap drainage gate to close would cause serious damage, a manually controlled gate in series should be considered for emergencies.

Topic 839 - Pumping Stations

839.1 General

Drainage disposal by pumping should be avoided where gravity drainage is reasonable. Because pumping installations have high initial cost, maintenance expense, power costs, and the possibility of failure during a storm, large expenditures can be justified for gravity drainage. In some cases, this can be accomplished with long runs of pipe or continuing the depressed grade to a natural low area.

Whenever possible, drainage originating outside the depressed areas should be excluded. District and Division of Structures cooperation is essential in the design of pumping stations, tributary storm drains, and outfall facilities. This is particularly true of submerged outlets, outlets operating under pressure, and outlets of unusual length.

839.2 Pump Type

Horizontal pumps in a dry location are generally specified for ease of access, safety, and standardization of replacement parts.

Only in special cases is stand-by power for pumping plants a viable consideration. All proposals for stand-by power are to be reviewed by and coordinated with the Division of Structures.

839.3 Design Responsibilities

When a pumping station is required, responsibility for design between the District and the Division of Structures is as follows:

(1) *Districts.* The District designs the collector and the outfall facilities leading from the chamber into which the pumps discharge. This applies to outfalls operating under gravity and with a free outlet. Refer to Topic 838.

Details of pumping stations supportive information to be submitted by the District to the Division of Structures is covered under Index 805.8 and Chapter 3-3.1(4) of the Drafting and Plans Manual.

(2) *Division of Structures.* The Division of Structures will prepare the design and contract plans for the pumping station, the storage box and appurtenant equipment, considering the data and recommendations submitted by the District.

The Division of Structures will furnish the District a preliminary plan based on data previously submitted by the District. It will show the work to be covered by the Division of Structures plans, including a specific location for the pumping plant and storage box, the average and maximum pumping rates and the power required.

839.4 Trash and Debris Considerations

Storm drain systems leading to pumping plants are to be designed to limit the inflow of trash and debris, as these may cause damage to the pump impellers and create a maintenance removal nuisance. Standard grate designs are effective at ensuring that trash and debris are screened out of the inflow, but where side opening or curb opening inlets are constructed, trash racks must be added to the inlet design. The only Standard Plan detail for curb opening designs is shown on Standard Plan D74B and is used in conjunction with Type GDO inlets. On those occasions where pipe risers with side opening inlets are part of the system, refer to Standard Plan D93C for appropriate trash rack design details.

839.5 Maintenance Consideration

Access to the pumping plant location for both maintenance personnel and maintenance vehicles is generally provided by way of paved access road or city street. One parking space minimum is to be provided in the vicinity of the pumping plant. An area light is generally provided when it is

determined that neither the highway lighting nor the street lighting is adequate. Access to the pumping plant for maintenance from the top of the cut slope generally consists of a stairway located adjacent to the pumping plant. The stairway generally extends from the top of cut slope to the toe of cut slope. Access to the pump control room should be through a vertical doorway with the bottom above flood level, and never through a hatch.

839.6 Groundwater Considerations

As the lowest point in the storm drain system, pumping plants are particularly susceptible to problems associated with rises in groundwater tables. Where the foundation of pump houses or associated storage boxes are at an elevation where they would be subjected to existing or future groundwater tables, sealing around the base of the foundation is necessary. The use of bentonite or other impervious material is typically sufficient in keeping groundwater from welling up through the relatively pervious structure backfill.

Sealing requirements will typically be specified by the Division of Structures during the pump plant design. However, the district should provide any information relative to historical groundwater levels or fluctuations which would be of importance, or known plans by local or regional water districts to modify recharge patterns in a manner that could impact the design.