Technical Report Documentation Page

1. REPORT No.
CA/TL-80/29

2. GOVERNMENT ACCESSION No.

3. RECIPIENT'S CATALOG No.

4. TITLE AND SUBTITLE
In Situ Testing Procedures

5. REPORT DATE
September 1980

6. PERFORMING ORGANIZATION

7. AUTHOR(S)
S.B.P. John

8. PERFORMING ORGANIZATION REPORT No.

9. PERFORMING ORGANIZATION NAME AND ADDRESS
Office of Transportation Laboratory
California Department of Transportation
Sacramento, California 95819

10. WORK UNIT No.

11. CONTRACT OR GRANT No.

12. SPONSORING AGENCY NAME AND ADDRESS
California Department of Transportation
Sacramento, California 95807

13. TYPE OF REPORT & PERIOD COVERED
Final

14. SPONSORING AGENCY CODE

15. SUPPLEMENTARY NOTES

16. ABSTRACT

An earlier report (FHWA/CA/TL 80-13) evaluated five in situ devices namely Iowa Borehole Shear Device, Vane, Standard Penetrometer, Dutch Cone and Cambridge Self Boring Pressuremeter. This report presents calibration and testing procedures for these five in situ probes. Information is presented on how each probe was adapted and modified for use with Caltrans' drill rigs. The geology of the three Northern California sites where these devices were tested is presented along with boring profiles. This report also includes cost considerations useful for a prospective buyer of any of these probes. A Bibliography is also included.

17. KEYWORDS
Soil mechanics, in situ measurement of soil properties, testing procedures, Iowa Shear Device, Vane, Standard Penetrometer, Dutch Cone & Cambridge Self Boring Pressuremeter

18. No. OF PAGES:
102

19. DRI WEBSITE LINK
http://www.dot.ca.gov/hq/research/researchreports/1978-1980/80-29.pdf

20. FILE NAME
80-29.pdf

This page was created to provide searchable keywords and abstract text for older scanned research reports.
November 2005, Division of Research and Innovation

501 8P A

REPORT NO. CA/TL-80/29

IN SITU TESTING PROCEDURES

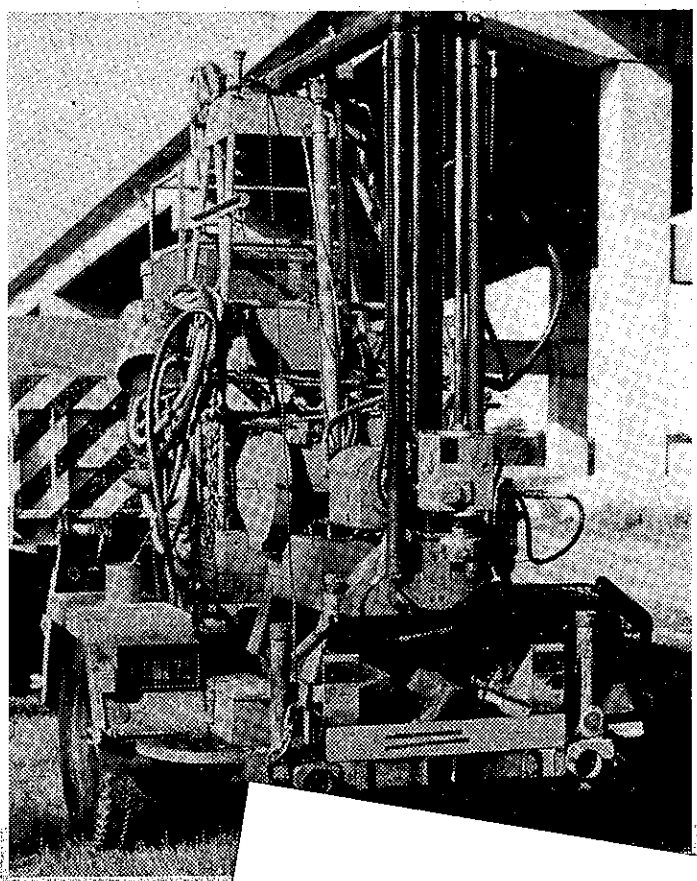

80-29

DND

SEPT.,1980

ClibPDF - www.fastio.com

NOTICE

The contents of this report reflect the views of the Office of Transportation Laboratory which is responsible for the facts and the accuracy of the data presented herein. The contents do not necessarily reflect the official views or policies of the State of California. This report does not constitute a standard, specification, or regulation.

The State of California does not endorse products or manufacturers. Trade or manufacturer's names appear herein only because they are considered essential to the object of this document.

ClibPDF - www.fastio.com

TECHNICAL REPORT STANDARD TITLE PAGE

1. REPORT NO.	2. GOVERNMENT ACCESSION NO.	3. RECIPIENT'S CATALOG NO.
CA/TL-80/29		

4. TITLE AND SUBTITLE	5. REPORT DATE
IN SITU TESTING PROCEDURES	September 1980
	6. PERFORMING ORGANIZATION CODE
7. AUTHOR(S) S.B.P. John	8. PERFORMING ORGANIZATION REPORT NO.
9. PERFORMING ORGANIZATION NAME AND ADDRESS Office of Transportation Laboratory California Department of Transportation Sacramento, California 95819	10. WORK UNIT NO
	11. CONTRACT OR GRANT NO.
12. SPONSORING AGENCY NAME AND ADDRESS California Department of Transportation Sacramento, California 95807	13. TYPE OF REPORT & PERIOD COVERED Final
	14. SPONSORING AGENCY CODE

15. SUPPLEMENTARY NOTES

16. ABSTRACT

An earlier report (FHWA/CA/TL 80-13) evaluated five in situ devices namely Iowa Borehole Shear Device, Vane, Standard Penetrometer, Dutch Cone and Cambridge Self Boring Pressuremeter. This report presents calibration and testing procedures for these five in situ probes. Information is presented on how each probe was adapted and modified for use with Caltrans' drill rigs. The geology of the three Northern California sites where these devices were tested is presented along with boring profiles. This report also includes cost considerations useful for a prospective buyer of any of these probes. A Bibliography is also included.

17. KEY WORDS	18. DISTRIBUTION STATEMENT
Soil mechanics, in situ measurement of soil properties, testing procedures, Iowa Shear Device, Vane, Standard Penetrometer, Dutch Cone & Cambridge Self Boring Pressuremeter.	No restrictions. This document is available to the public through the National Technical Information Service, Springfield, VA 22161.

19. SECURITY CLASSIF. (OF THIS REPORT)	20. SECURITY CLASSIF. (OF THIS PAGE)	21. NO. OF PAGES	22. PRICE
Unclassified	Unclassified	102	

DS-TL-1242 (Rev.6/76)

80-29 DND

ClibPDF - www.fastio.com

ДИС Р6-08

ClibPDF - www.fastio.com

STATE OF CALIFORNIA
DEPARTMENT OF TRANSPORTATION
DIVISION OF CONSTRUCTION
OFFICE OF TRANSPORTATION LABORATORY

IN SITU TESTING PROCEDURES

Study Supervised by ..... Raymond A. Forsyth, P.E.

Principal Investigators ..... R. H. Prysock, P.E.
S.B.P. John, P.E.

Report Prepared by ..... S.B.P. John, P.E.

Assisted by ..... J. G. MacFarlane
L. R. Leech

ROBERT O. WATKINS, P.E.
Chief, Office of Transportation Laboratory

ClibPDF - www.fastio.com

ClibPDF - www.fastio.com

ACKNOWLEDGMENTS

The author wishes to acknowledge the assistance of: Dave Mauldin for his help in modifying Iowa Device as well as designing the cutter drive of Cambridge Probe; George Oki, Dick Carello and Leonard Nordman for fabricating the mounting bracket of Dutch Cone; John Nunes for redesigning cutter and cutting shoe of Cambridge Probe; Jim MacFarlane for designing the console for the Cambridge Probe; Frank Lienert and Darrel Knight for laboratory testing; and Elmer Wigginton, Bill Taylor, Marion Ivester and Eddie Fong for preparing the figures for the report.

ClibPDF - www.fastio.com

ClibPDF - www.fastio.com

CONVERSION FACTORS

English to Metric System (SI) of Measurement

Quanity	English unit	Multiply by	To get metric equivalent
Length	inches (in)or(")	25.40 .02540	millimetres (mm) metres (m)
	feet (ft)or(')	.3048	metres (m)
	miles (mi)	1.609	kilometres (km)
Area	square inches (in^2) square feet (ft^2) acres	6.432×10^{-4} .09290 .4047	square metres (m^2) square metres (m^2) hectares (ha)
Volume	gallons (gal) cubic feet (ft^3) cubic yards (yd^3)	3.785 .02832 .7646	litres (l) cubic metres (m^3) cubic metres (m^3)
Volume/Time			
(Flow)	cubic feet per second (ft^3/s)	28.317	litres per second (l/s)
	gallons per minute (gal/min)	.06309	litres per second (l/s)
Mass	pounds (lb)	.4536	kilograms (kg)
Velocity	miles per hour(mph) feet per second(fps)	.4470 .3048	metres per second (m/s) metres per second (m/s)
Acceleration	feet per second squared (ft/s^2)	.3048	metres per second squared (m/s^2)
	acceleration due to force of gravity(G)	9.807	metres per second squared (m/s^2)
Weight Density	pounds per cubic (lb/ft^3)	16.02	kilograms per cubic metre (kg/m^2)
Force	pounds (lbs) kips (1000 lbs)	4.448 4448	newtons(N) newtons (N)
Thermal Energy	British thermal unit (BTU)	1055	joules (J)
Mechanical Energy	foot-pounds(ft-lb) foot-kips (ft-k)	1.356 1356	joules (J) joules (J)
Bending Moment or Torque	inch-pounds(ft-lbs) foot-pounds(ft-lbs)	.1130 1.356	newton-metres (Nm) newton-metres (Nm)
Pressure	pounds per square inch (psi) pounds per square foot (psf)	6895 47.88	pascals (Pa) pascals (Pa)
Stress Intensity	kips per square inch square root inch (ksi $\sqrt{in}$)	1.0988	mega pascals $\sqrt{metre}$ (MPa $\sqrt{m}$)
	pounds per square inch square root inch (psi $\sqrt{in}$)	1.0988	kilo pascals $\sqrt{metre}$ (KPa $\sqrt{m}$)
Plane Angle	degrees (°)	0.0175	radians (rad)
Temperature	degrees fahrenheit (F)	$\frac{tF - 32}{1.8} = tC$	degrees celsius (°C)

ClibPDF - www.fastio.com

ClibPDF - www.fastio.com

TABLE OF CONTENTS

	Page
LIST OF TABLES	vii
LIST OF FIGURES	viii
Chapter 1	
INTRODUCTION	1
Chapter 2	
IOWA BOREHOLE SHEAR DEVICE	2
Testing Procedures	2
Selection and Application of Normal Pressure	4
Consolidation Time	5
Application of Shearing Stress	8
Withdrawing the Device	9
Example	10
Chapter 3	
VANE SHEAR DEVICE	12
Calibration Procedure	12
Proving Ring Calibration	12
Rod Calibration	13
Testing Procedure	16
Example	17
Correction Factor	17
Chapter 4	
DUTCH CONE PENETROMETER	20
Modifications and Adaptations	20
Calibration	23
Testing Procedures	25
Continuous Sounding Procedure	26
Discontinuous Sounding Procedure Using Friction Jacket Cone	26
Discontinuous Sounding Procedure Using Jacket Cone	28
Example	31
Rod Retrieval	31
Lateral Friction	31

ClibPDF - www.fastio.com

ClibPDF - www.fastio.com

TABLE OF CONTENTS (Cont.)

	Page
Chapter 5	
STANDARD PENETROMETER	37
Calibration	37
Testing Procedures	38
Example	38
Chapter 6	
CAMBRIDGE SELF BORING PRESSUREMETER	43
Calibration	43
Testing Procedures	46
Example	52
Appendix 1	
BIBLIOGRAPHY	56
General	57
Iowa Borehole Shear Device	60
Vane Shear Device	61
Dutch Cone Penetrometer	63
Standard Penetrometer	65
Self Boring Pressuremeter	66
Appendix 2	
GEOLOGY AND BORING PROFILES	69
Geological Description of Site 1 (Downtown Sacramento)	70
Geological Description of Site 2 (Mare Island)	71
Geological Description of Site 3 (Rio Vista)	72
Site 1 Boring Profiles at D-1, P-1, P-2 and DC-1	74
Site 2 Boring Profiles at D-1 and D-2	78
Site 3 Boring Profiles at D-1, D-2, F-2 and DC-1	80

ClibPDF - www.fastio.com

ClibPDF - www.fastio.com

TABLE OF CONTENTS (Cont.)

	Page
Appendix 3	
COST CONSIDERATIONS	84
Iowa Borehole Shear Device	85
Vane Shear Device	86
Dutch Cone Penetrometer	86
Standard Penetrometer	87
Cambridge Probe	87
REFERENCES	90

ClibPDF - www.fastio.com

ClibPDF - www.fastio.com

LIST OF TABLES

Table	Title	Page
1	Recommended Trial Increments of Normal Pressure (IOWA)	5

ClibPDF - www.fastio.com

ClibPDF - www.fastio.com

LIST OF FIGURES

Figure	Title	Page
1.	Calibration Chart (Normal Stress)	6
2.	Calibration Chart (Pulling Stress)	7
3.	Typical Example (Iowa)	11
4.	Conversion Chart-1	14
5.	Conversion Chart-2	15
6.	Typical Example of Field Test Sheet (Vane)	18
7.	Correction Factors For Field Vane Tests	19
8.	Mounting Bracket (Mobil B61) For Dutch Cone	21
9.	Structural Details of Mounting Bracket (Mobil B61) For Dutch Cone 1/16" Scale	22
10.	Vertical Reaction Test For Mobil B61	24
11.	Lever Position in Continuous Sounding With Cone	27
12.	Lever Positions in Discontinuous Sounding With Friction Jacket Cone	29
13.	Lever Positions in Discontinuous Sounding With Jacket Cone	30
14.	Typical Example of a Field Sheet (Cone)	32
15.	Depth Profiles of Dutch Cone Test Data, Site 1	35
16.	Lateral Friction Reducing Section Tube	31
17.	Typical Standard Penetrometer Test Sheet	39

ClibPDF - www.fastio.com

ClibPDF - www.fastio.com

LIST OF FIGURES (Cont.)

Figure	Title	Page
18.	Typical Plot of Standard Penetrometer Test Data	42
19.	Laboratory Calibration of Radial (Strain) Arms	44
20.	Caltrans Console For Applying Pressure	47
21.	Internal Set Up of Caltrans Console	50
22.	Typical Cambridge Pressuremeter Test Sheet	53
23.	Typical Cambridge Pressuremeter Test Plots	55

ClibPDF - www.fastio.com

ClibPDF - www.fastio.com

Chapter 1

INTRODUCTION

Any in situ probe procured from a manufacturer cannot be used directly in the field by itself. In all the cases, these in situ probes need to be used with a drill rig. Therefore, to conduct an in situ test, the probe and the drill rig need to be made compatible with one another. In this report, Caltrans' experience is summarized on how five in situ probes were modified and the drill rigs adapted. In some cases, some change in design of a particular probe was necessary before the field test could be conducted and they are documented too. This report could be considered as supplementing an earlier report (FHWA/CA/TL 80-13) which presents evaluation of these five probes.

Chapters 2 to 6 document the modifications and adaptations done. These chapters are followed by three appendices.

Appendix 1 contains an exhaustive bibliography on the various probes and in general on the subject of in situ testing. Appendix 2 presents a brief geologic description of each of the three sites as well as the logs of various borings in which undisturbed samples were taken. The boring profiles also contain the summaries of all the laboratory tests conducted. Appendix 3 recounts the various expenses incurred during the modification and adaptation process. The purpose is to give the reader an idea of the dollar amounts to be spent before the various probes are made operational.

ClibPDF - www.fastio.com

Chapter 2

IOWA BOREHOLE SHEAR DEVICE

Iowa Device is one of the few borehole devices now in the market. It needs predrilled holes in order to conduct the in situ test. In an earlier report(1), the various modifications are documented. In this chapter, the testing and calibration procedures are presented. These are not very dissimilar to the manufacturer's instructions.

Testing Procedures

In fine-grained soils without rock or gravel, holes to 6 feet in depth can be formed with the hand auger.

In stable soils to greater depth, the hole is best prepared with 6 inch flight auger to within 1.5 feet of scheduled test depth. The auger is removed and a 3 inch O.D. Shelby sampler pushed the remaining distance. This forms a smooth hole of proper size and provides a sample for correlation tests.

If unstable soil poses a threat of cave-in and possible loss of shearhead, an 8-inch hollow flight auger can be used. The Shelby sample can be retrieved through the auger and the shearhead lowered through the auger to test depth. The puller platform can rest on the open end of upper auger section. When using this method, one must be careful not to drop the shearhead down the auger bore. The vise block can be used to restrain the pullrod while sections are added.

ClibPDF - www.fastio.com

To set up, the shearhead is removed from the case and the pressure tubing with the leads uncoiled. The couplings should be protected from damage or contamination and kinking of the tubing should be avoided. The necessary lengths of pullrods are assembled and connected to the head. No more than five sections should be assembled due to the difficulty in handling and the danger of rods bending due to their own weight. The console is removed from the case and the regulator is completely backed off. The backcover with magnetic catches is removed and the CO_2 cylinder is turned on two full turns. After cover replacement, the console is set near the borehole on level ground and the pressure tubing is connected to the outlets following the color coding. The outer sleeve of the couplers must be pushed down so that male sections will snap in. The vise plate is placed at the edge of the hole. The vise should be open. The selector handle is set on the console at the "retract" position. The pressure of 10 psi is applied with a regulator to confirm that the shearhead retracts and expands fully. The selector handle should be left in "retract" position.

The shearhead is then carefully lowered into the hole. When the test elevation is reached, or when it becomes necessary to add more lengths of pull rod, the assembly should be supported. To do this, the vise plate should be moved into position and the pullrod secured by ensuring that the hook-on device is fully engaged and the jaws fully tightened.

The working table is now erected over the test hole and the legs are adjusted so that it is perpendicular to the

ClibPDF - www.fastio.com

axis of the hole. The puller mechanism is then placed on the table with jackscrew bore aligned with puller rod. Sufficient additional rod sections are connected and inserted into the hole so that they just protrude above the jackscrew. The ring gear must be held stationary at this point and the jackscrew turned downward until only one full thread shows above a ring gear hub. A collett block is installed over the rod with its notches down. The block is shifted until the notches engage the four protruding lugs on top of the jackscrew. The allen-head clamp screw is securely tightened and the block firmly pressed into place. The bail is placed between the uprights of the handcrank support. The vise plate is released and swung clear of the rod. The gage reading is noted and recorded at this time. The gage reading reflects the suspended weight of the shearhead and the puller rod. This reading should be subtracted from all test readings to obtain the net load. The console is now placed on the worktable and all retraction pressure is released by backing regulator completely off. The selector handle is now switched to "Expand".

Selection and Application of Normal Pressures

The incremental value ($\Delta\sigma_n$) of normal stress to be used depends upon soil conditions at the elevation of test. In many soils, tests may be performed at intervals of 5 psi. The trial increments ($\Delta\sigma_n$) of normal pressure varies with the type of soil to be tested. Some guidelines are presented in Table 1 below.

ClibPDF - www.fastio.com

Table 1 - Recommended Trial Increments of Normal Pressure (Iowa)

Soil	Examples	$\Delta\sigma_n$, psi
Very soft	Very weak clay near the liquid limit; very loose sand, at or below the critical void ratio	0.5-1
Soft	Soft clay; loose sand	1-2
Medium	Moderately dense silt or sand; wet clay	2.5
Hard	Dense sand, compact clay	5-10
Very hard	Cemented sand, consolidated clay, shale, ice	10*

*Data often unreliable for cohesion because of incomplete seating.

NOTE: $\Delta\sigma_n$ = Trial increments of pressure

Two calibration charts are provided by the manufacturer to determine the correct pressure gage reading that will give the desired normal stress. In both charts, the horizontal axis gives the gage pressure in lbs/sq. in. In the vertical axis in the first chart, shown in Figure 1, normal stress (σ_n) is plotted. In the second chart, shown in Figure 2, in the vertical axis τ(Tau) the pulling stress is plotted. To find the correct gage reading, the respective chart should be used.

Consolidation Time

A ten-minute consolidation time is recommended by the manufacturer for the first application of normal stress

ClibPDF - www.fastio.com

IOWA BORE HOLE SHEAR

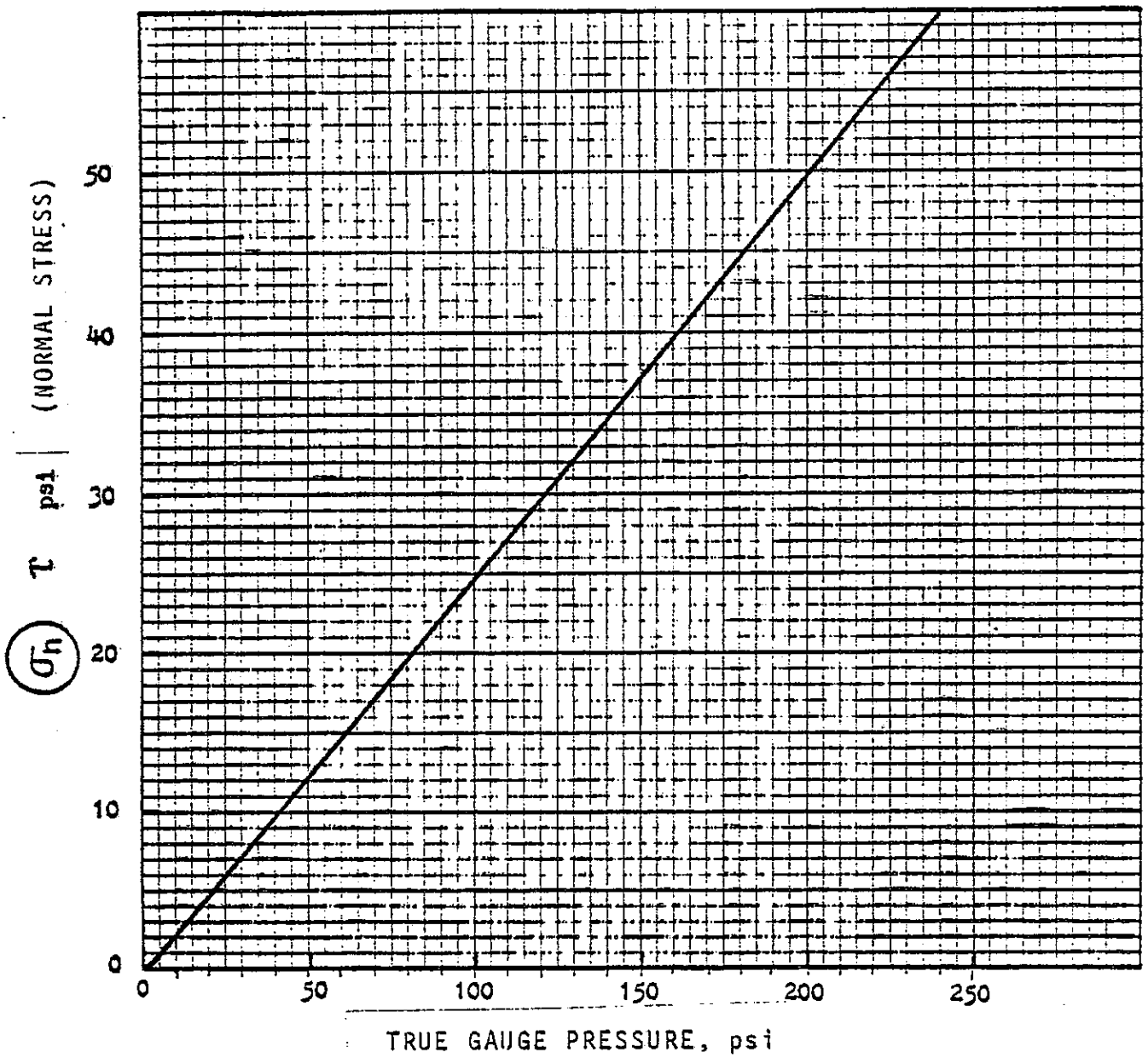

		Normal Stress		Shear Stress	
Serial No.	121	Slope	0.2513	Slope	
Date of Calib.	3-10-75	Intercept	-0.7915	Intercept	
Calib. by	K.H.Y	r	0.99997	r	

Source: Ref (2)

FIGURE 1 CALIBRATION CHART (NORMAL STRESS)

ClibPDF - www.fastio.com

IOWA BORE HOLE SHEAR

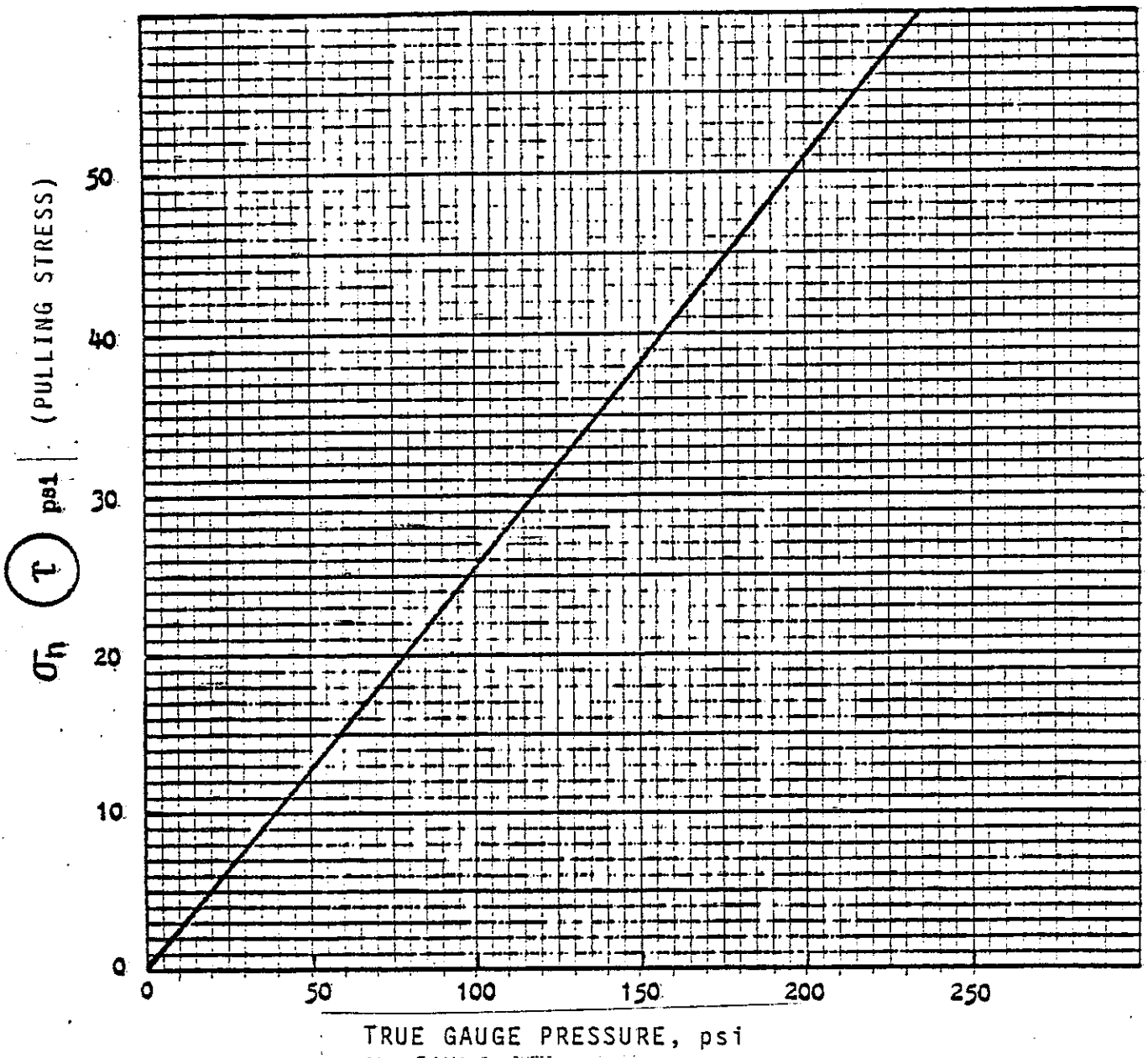

		Normal Stress		Shear Stress	
Serial No.	121	Slope		Slope	0.2548
Date of Calib.	3-10-75	Intercept		Intercept	0.1205
Calib. by	K.H.Y.	r		r	0.99995

Source: Ref (2)

FIGURE 2 CALIBRATION CHART (PULLING STRESS)

ClibPDF - www.fastio.com

and five minutes for each subsequent increase of stress. In free-draining sands with little clay or sandy clays, the time can be reduced to 5 and 2 minutes. In all other soils, the full time of 10 minutes and 5 minutes as recommended by the manufacturer should be strictly observed.

Application of Shearing Stress

The first shear test can now be performed. The pipe vise is released and the initial reading on the puller pressure gage is recorded. This first shearing test is run by turning the crank on the pulling device at the rate of two revolutions per second. One revolution of the crank raises the shearhead .001 inch (.0254mm). The crank is turned at two revolutions per second giving a rate of strain of .002 inch (.0508mm) per second. As the crank is turned, the shearing resistance increases until a peak value is attained. In some soils the peak may have a constant value; while in others the reading will drop off or cycle up and down. The peak reading is recorded and the puller is backed off to the starting point.

The next increment of normal stress can now be applied. After the required waiting period (consolidation time), the next shear test can be performed. At least three to six normal stress increments should be used. The first increment should not be utilized due to the likely improper seating conditions. The last reading may also be doubtful due to possible full expansion of the shearhead.

After the last shear test, which may be the third increment or the fifth or sixth increment, the load is backed down to

ClibPDF - www.fastio.com

the starting point. The normal gage reading is reduced to 20 psi. The selector handle is now returned to "Retract".

A second series of tests could be performed at the same elevation by rotating the shearhead 90° in either direction. The collett bail can be lifted clear of supports to accomplish the shift. The vise plate is then engaged and tightened. The collett clamp screw is loosened and lifted clear of the screwjack. The screwjack is repositioned in such a way that one-third of it is exposed. It is then reengaged and tightened to the pullrod. When the vise plate is released, a second series of tests can be performed.

Withdrawing the Device

After the final test is conducted, the pulling load is backed off. Normal pressure should now be reduced to 20 psi. The selector is moved to "Retract" position and the vise plate is then engaged and tightened. The console is removed from the worktable. Care should be exercised to avoid kinking the tubing. After the collett block is loosened and removed, the puller platform is lifted clear of pullrod and placed in case. The table can now be moved from the work area to the truck. The shearhead is very carefully lifted from the hole, using the vise plate as needed, to prevent accidental dropping of the entire gear. Sections of pullrod are removed as necessary for easy handling. The shearhead plates should then be cleaned with a steel brush provided in the kit. The selector should be set to "Expand" position to fully open the head for cleaning behind the plate. The selector can now be set to "Retract" position to release all pressure.

ClibPDF - www.fastio.com

Certain precautions should be taken to prevent damaging the shearhead. The shearhead plate should never be manually operated as that could result in damage to the special rolling diaphragm in the piston. After the plates have been cleaned, a light coating of WD-40 (rust preventive) is applied. A protective bag is placed over the snap couplings and the pressure lines are fully secured. All the various components are now placed in respective cases.

Example

Test data developed from an actual test are presented by Figure 3. Three tests were conducted at the test elevation after which the probe was rotated 90° and three more tests conducted. From this plot, a cohesion (c) of 1.5 psi and a friction angle (ϕ) of 33° were obtained.

ClibPDF - www.fastio.com

OFFICE OF TRANSPORTATION LABORATORY

SOIL MECHANICS AND PAVEMENT BRANCH

IOWA BORE HOLE SHEAR

Location: Site 1, Sacramento Date: 4/21/77

Depth: 4' Horizon: I-1 Tested by: JGM

Description: 300 lbs (Push)

Point No.	Normal Stress		Shear Stress		Cons. Time	Remarks
	Gauge	σ_n	Gauge	τ_{max}		
1	8	1.7	8+	2	5 min	3 lbs Initial
2	15	3.5	13	3.2	2 "	1.5 lbs. "
3	29	7	17*	4.2	2 "	1.5 lbs. " *sheared
						and dropped back to 14
4	8	1.7	9+	2.5	5 "	3+ lbs. Initial
5	15	3.5	13.5	3.5	2 "	1.5 lbs. "
6	29	7	18-*	4.8	2 "	1.5 lbs. " *sheared
						and dropped to 13 (sharply)

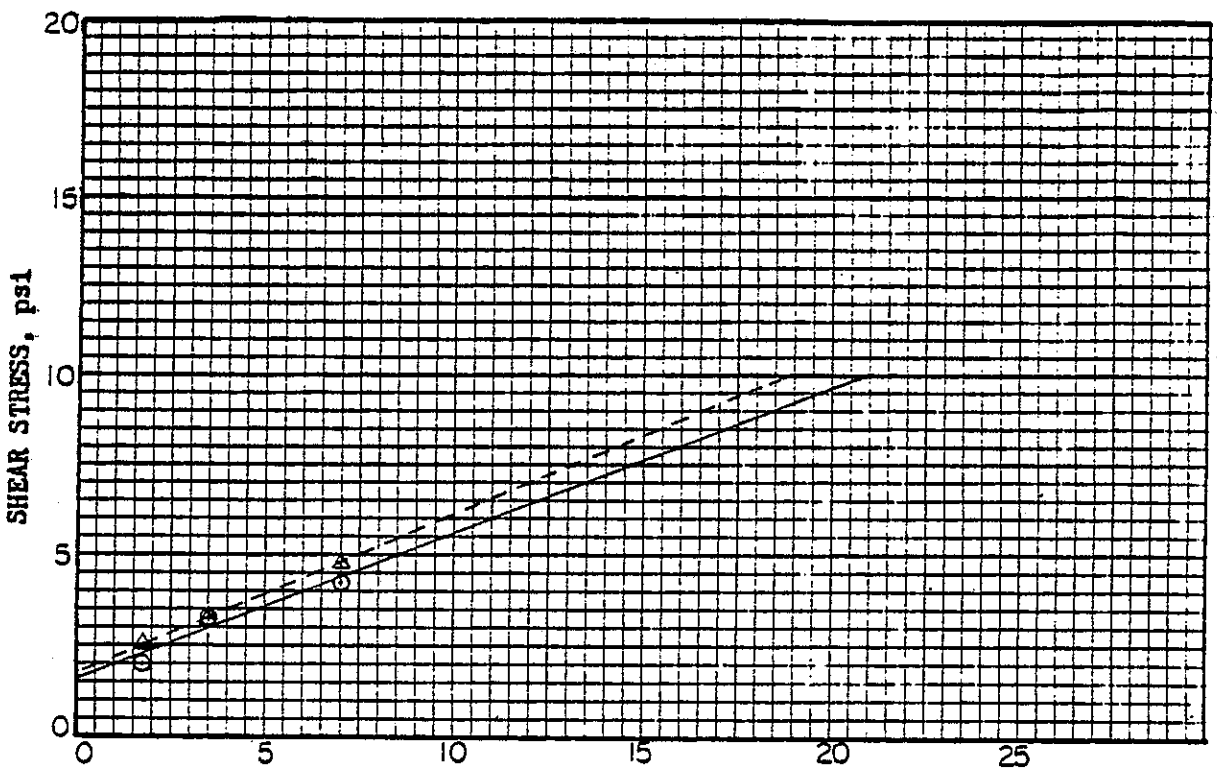

FIGURE 3 TYPICAL EXAMPLE

ClibPDF - www.fastio.com

Chapter 3

VANE SHEAR DEVICE

Torsional Shear Vane has been in use for many years. Various sizes and shapes have been introduced. There is an ASTM Test Designation(3) available for conducting this in situ test. It leaves out the calibration procedures for the various accessories like proving ring and rod. The procedures as specified in the ASTM method were followed and the information presented in this chapter need to be considered as supplementing this method. At the end of this chapter, the correction to be applied to the field value is presented in the form of a chart based on the plasticity index of a particular soil.

Calibration Procedure

The ASTM specification(3) for conducting vane shear test does not spell out the procedures to be followed for calibrating the various accessories before proceeding to conduct the test. The calibration needs to be conducted in two steps. The first step consists of calibrating the proving ring and the second consists of calibrating the various lengths of rods used.

Proving Ring Calibration

The proving ring may be calibrated in the following manner:

Bolt the gear-driven vane shear assembly to its base plate. Clamp or otherwise secure the entire unit to a heavy table

ClibPDF - www.fastio.com

or large vise. Clamp a 10"+ (long enough to extend through the chuck past the base plate bearing), 3/4" diameter bolt (1-1/8" hex-head) in the 2-piece chuck assembly. Rotate the bolt and chuck counterclockwise until the torque arm makes contact with the load button on the proving ring. Using a precision torque wrench with a 1-1/8" socket, apply torque to the 3/4" bolt in a counterclockwise direction. Read and record the proving ring dial for appropriate increments of torque.

Substituting the torque wrench readings into the general equation s = kT (where s = shear strength in TSF, T = torque in lb-ft and k = constant for a given vane size) and plotting shear strength vs dial reading will develop a family of curves (Figures 4 and 5) for converting load dial readings to shear strength.

Rod Calibration

When conducting a vane shear test, a certain amount of rod twist will occur before any actual vane rotation is realized. The deeper the test, the more the length of rod used and the more the rod twist. Therefore, the following procedure was used to obtain a rod torque factor.

First, using methods of mechanics of materials, a twist constant was calculated for a 9.8 foot length of steel vane rod. Then a 9.8 foot section of vane rod was clamped on one end to prevent rotation. Using a precision torque wrench, a predetermined torque was applied at the free end of the rod and the angle of deflection was carefully measured. From this data, a twist constant was determined. These two methods checked within 2-1/2% of each other.

ClibPDF - www.fastio.com

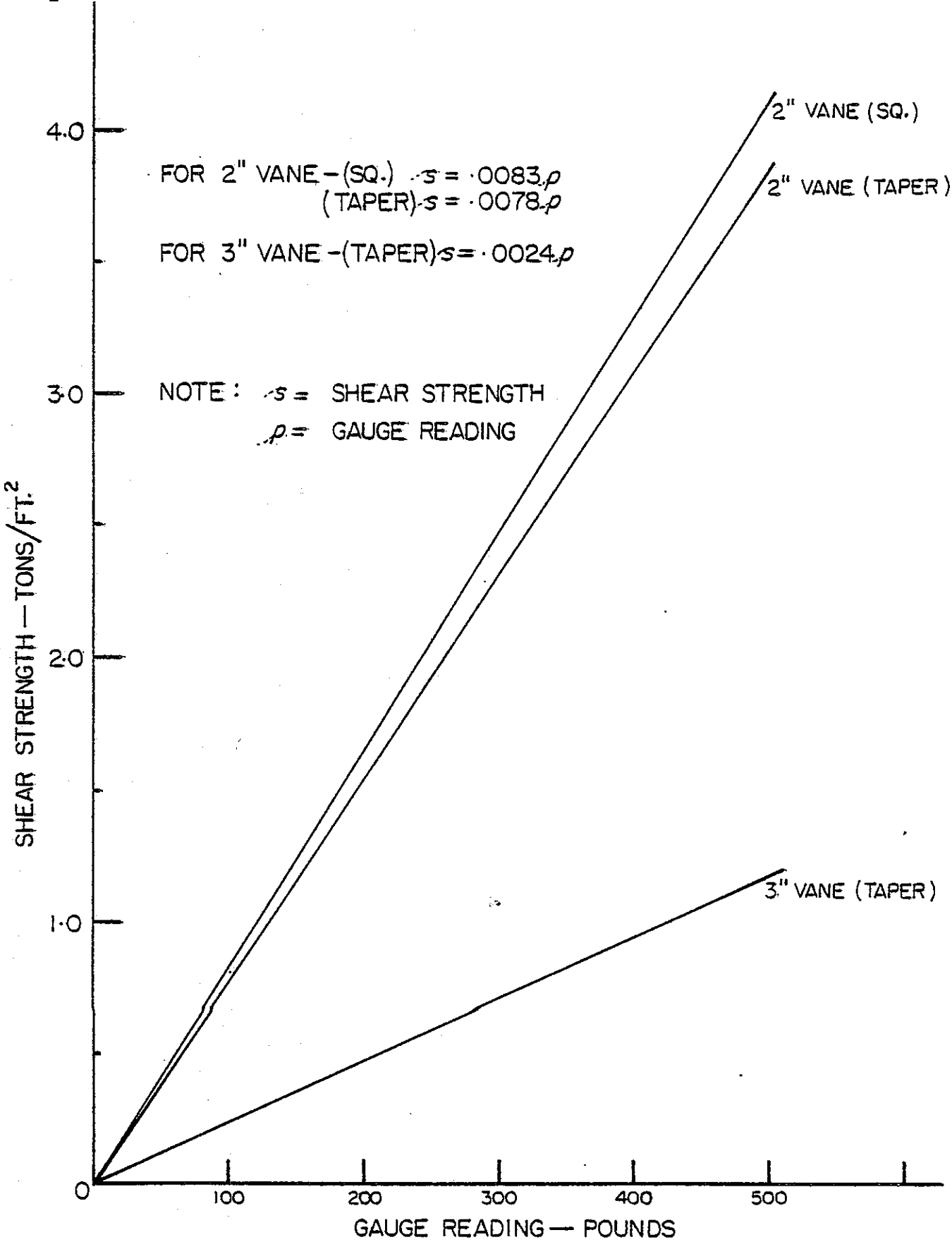

FIGURE 4 CONVERSION CHART -1

ClibPDF - www.fastio.com

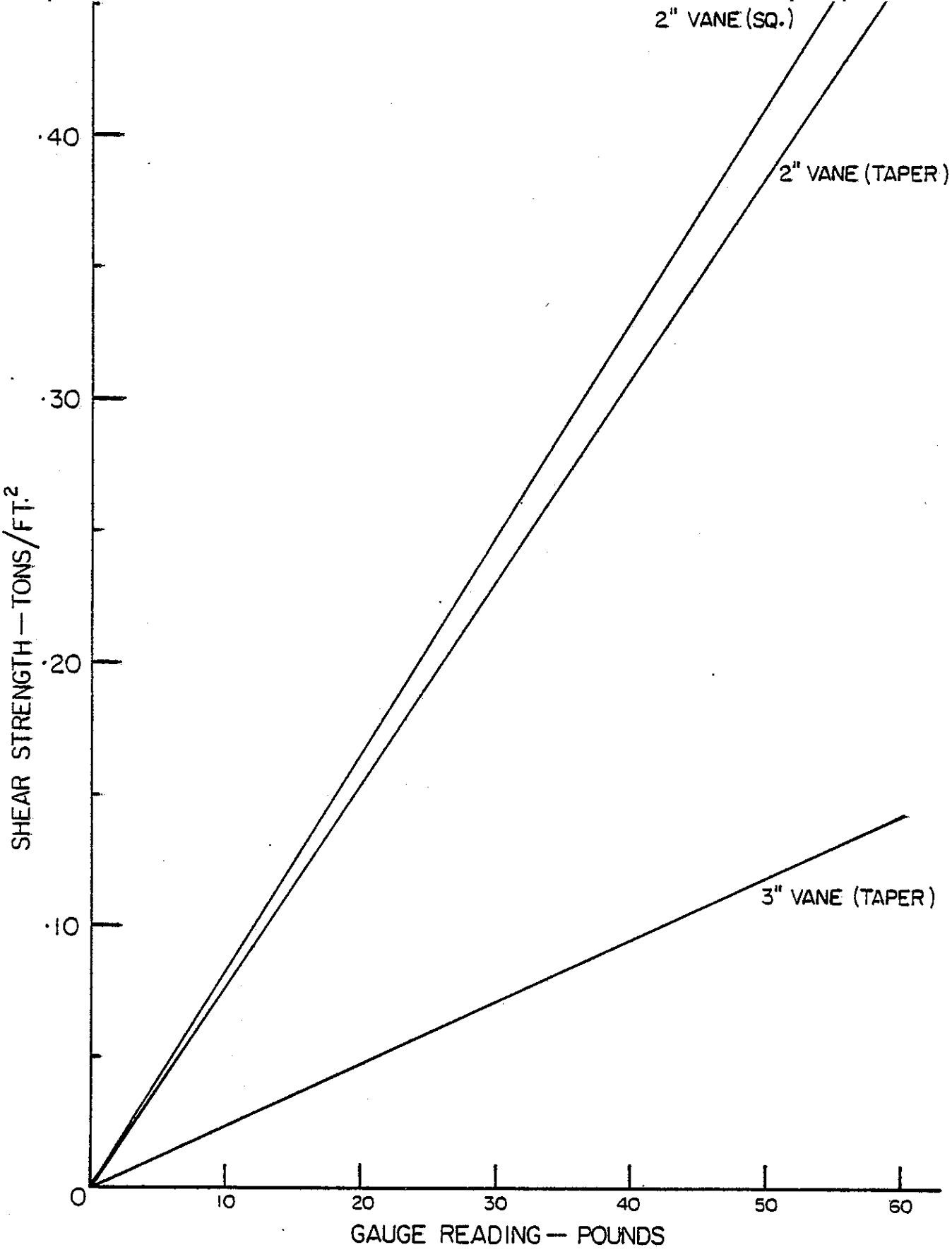

FIGURE 5 CONVERSION CHART -2

ClibPDF - www.fastio.com

Testing Procedure

The vane shear test procedure is covered in the American Society of Testing and Materials Designation No. 2573-72,(3). The following is a discussion of procedures adopted in the course of this study that are not covered by the ASTM specification.

The vane rod is inserted within and operated through, A-rod to minimize friction. In order to prevent mud and groundwater from entering the annular space between the vane rod and the interior of the A-rod, a grease seal adapter consisting of a short threaded section of A-rod with a zerk fitting for a grease-gun connection is screwed into the "down-hole" end of the A-rod. Rubber "O-rings" fitted inside the adapter retains the grease applied through the zerk. The small inner rod extends through the adapter opening and the vane is screwed onto it.

The test is done in two steps: undrained shear strength, and remolded shear strength. The double rod assembly with vane attached is pushed into the soil to a depth about one foot to 1.5 feet above the desired test depth. The A-rod is then secured in place by means of a platform-mounted vise on the ground at the top of the test boring which prevents further advancement downward of the A-rod. The uppermost section of A-rod is removed to expose the vane rod to which the gear device is to be attached. The vane is then advanced to the test depth by pushing the vane rod downward the required distance. Allen set-screws are then closed to grasp the vane rod. Inasmuch as this is done manually, care should be exercised to avoid off-centering of the rod as this can contribute to misalignment

ClibPDF - www.fastio.com

and side thrust. A self-centering chuck arrangement similar to those on machinist's lathes is useful for this purpose.

A small battery-powered electric motor is used to drive the gears that apply the torsional force to the vane rod at the prescribed constant rate. By observing the proving ring and Dillon force gauge attached to the gear drive, increments of force can be recorded as the test proceeds. After shear-failure of the soil, the gauge reading either declines or remains constant. This signals the end of the undrained test.

The ASTM standard procedure requires that the remolded strength test be conducted within one minute after rapidly rotating the vane through 10 revolutions. This is accomplished by attaching a hand crank to the vane rod, releasing the allen set-screws, grasping the rod, and then turning the crank. The set-screws are engaged, the proving ring and force gauge repositioned, and the gear motor started. It is required that the remolded strength test be started within one minute after completion of the vane rotation.

Example

A typical example of the field test sheet is shown as Figure 6.

Correction Factor

Based on embankment failures, Figure 7 has been developed (4). It relates field vane correction factor to Plasticity

ClibPDF - www.fastio.com

OFFICE OF TRANSPORTATION LABORATORY

SOIL MECHANICS AND PAVEMENT BRANCH

VANE SHEAR TEST DATA DATE: 2-25-77

PROJECT: Site 1, W-X Streets, Sacramento

BORING NO.: V-1 INSPECTOR: L.R. Leech

DEPTH: 9.5' CREW: J. Shepherd

VANE SIZE: 3" Tapered Lee Keep

REVOLUTION OF SHAFT	DIAL READING UNDISTURBED	DIAL READING REMOLD
5	0	0
10	0	3
25	5	7
50	6	10
75	7	11
100	10	12
125	11	12
150	12	12
175	13	12
200	15	12
225	15	11
250	17	10
275	19	9
300	20	
325	22	
348	25	
375	24	
400	25	
425	26	
450	27	
475	28	
500	27	
525	23	

FIGURE 6. TYPICAL EXAMPLE OF FIELD TEST SHEET.

ClibPDF - www.fastio.com

Index. The shear strength measured in the field could be less or more than the actual value depending upon its Plasticity Index. Bjerrum who originally developed this chart has also recommended an average curve. This is used to estimate the correction factor μ.

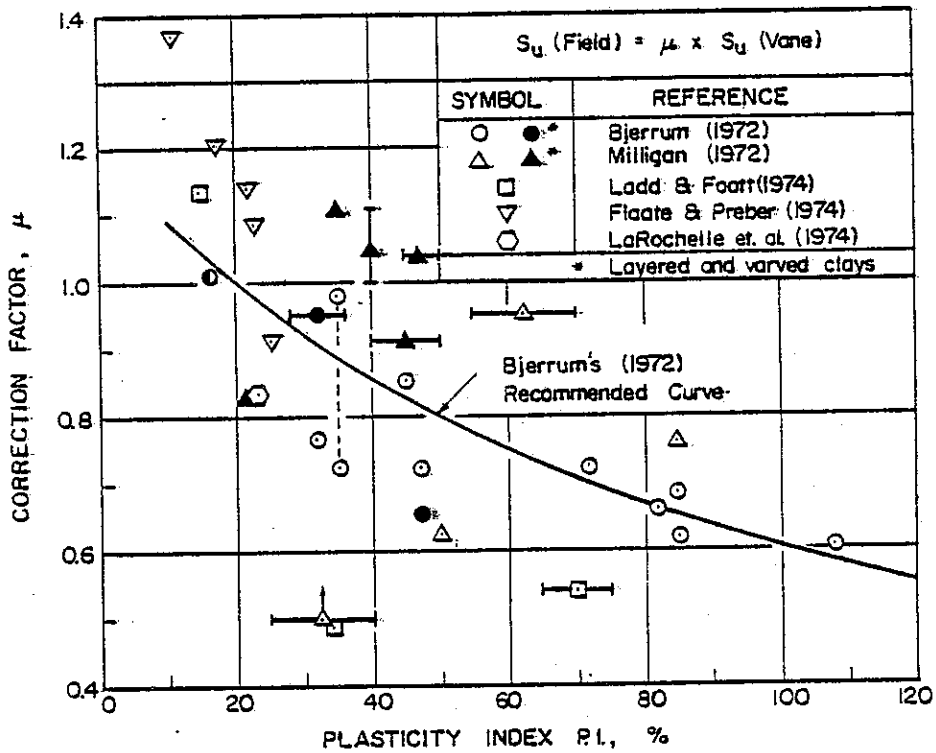

Source: Ref (4)

FIGURE 7 CORRECTION FACTORS FOR FIELD VANE TESTS

ClibPDF - www.fastio.com

Chapter 4

DUTCH CONE PENETROMETER

Among the many cone penetrometers designed and marketed today, Dutch Cone has become increasingly popular in the USA. The procedures for testing described in this chapter are based on the ASTM tentative test method (5) and the manufacturers instructions (6). Here the manual method of reduction and plotting of field test data are explained. The data could also be reduced and plotted using a computer program (7).

Modifications and Adaptations

The package used in this study is referred to as the Kentucky Conversion Kit. This name was based on the adaptation of Dutch Cone by the Kentucky Department of Transportation. Hence, the only modification and adaptation required was the design and fabrication of a mounting bracket, not supplied by the manufacturer.

Based on the drawings supplied by the North American representative as well as the sketch borrowed from the Nevada State Highway Department, Caltrans designed and fabricated the mounting bracket for using Dutch Cones with Mobil B61 drill rigs. The mounting bracket is made from 3/4 inch thick hot-rolled steel plates. The front view and the side view of this mounting bracket is presented in Figure 8. The structural details of the various parts of this mounting bracket are presented in Figure 9.

ClibPDF - www.fastio.com

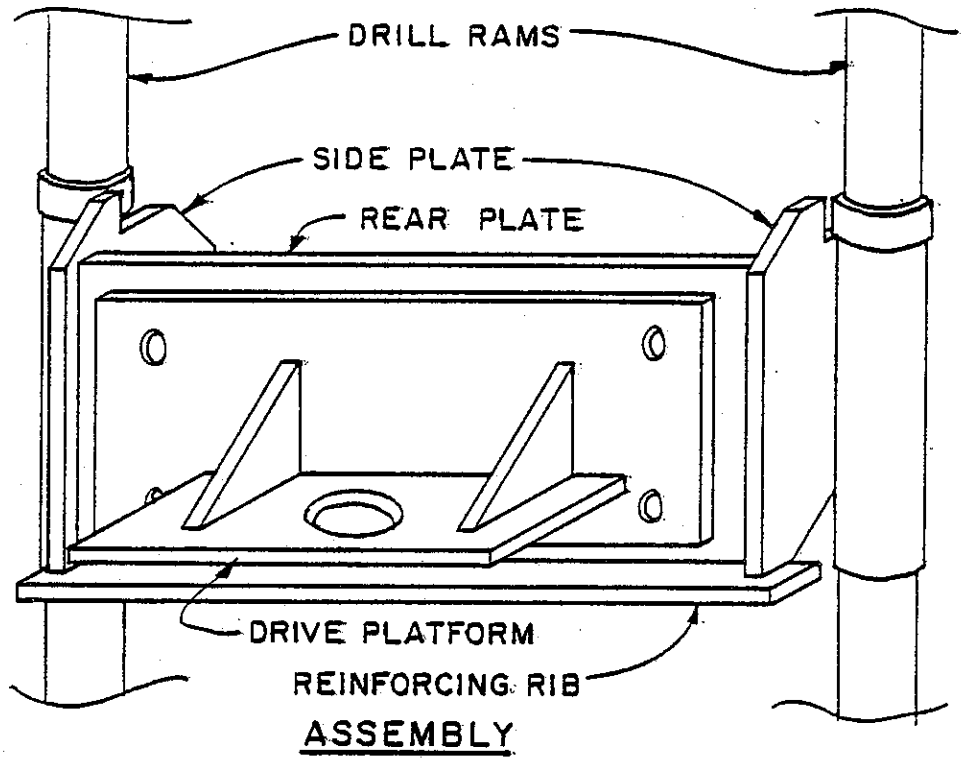

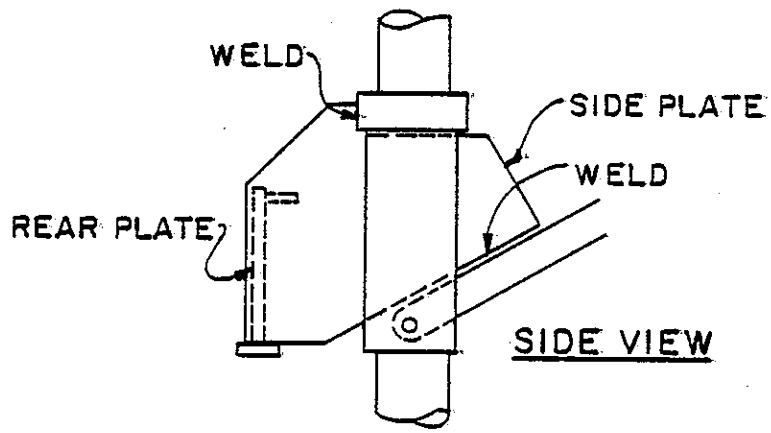

MOUNTING BRACKET (MOBIL B-61)
FOR DUTCH CONE
1/16" SCALE

FIGURE 8

ClibPDF - www.fastio.com

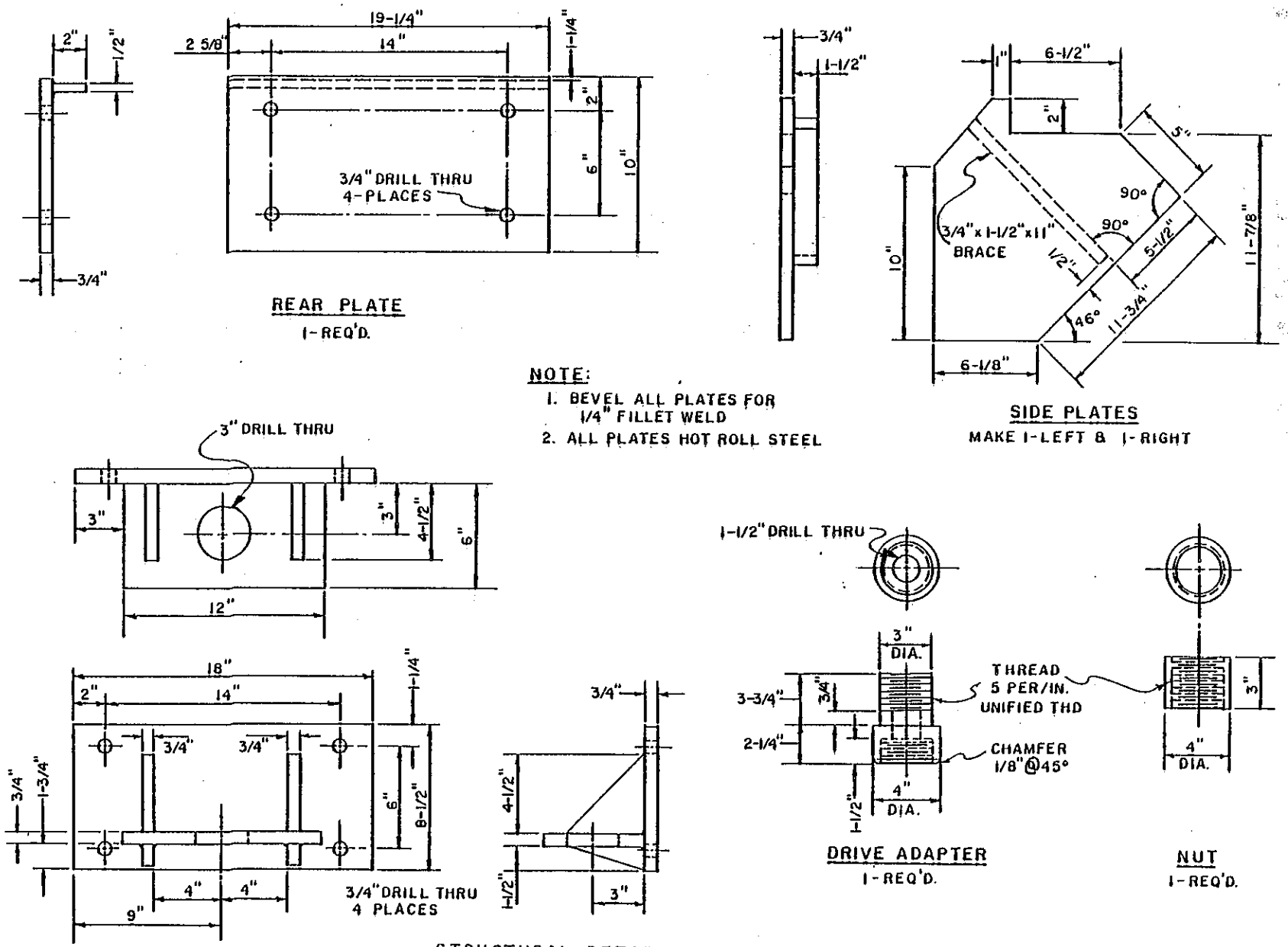

STRUCTURAL DETAILS OF
MOUNTING BRACKET (MOBILE B-61)
FOR DUTCH CONE
1/16" SCALE

ClibPDF - www.fastio.com

The purpose of the Kentucky Dutch Cone conversion package is to allow the drill to bypass some of its hydraulic power to advance the cone at a controlled rate. This conversion package is part of the truck-mounted Mobil B61 drill rig. It allows the drill rig to perform the Dutch Cone soundings using the rig's hydraulic down feed system to advance the cone at a controlled rate of one to two cm per second (.4 to .6 inch per second). The system is completely self-contained and does not interfere in any way with the drill rig's main hydraulic system.

Calibration

Two procedures are required before the Dutch Cone can be used with drill rigs in the field. The first thing is to determine the vertical reaction that one can command by using a particular drill rig. The second procedure is to calibrate and check the load cell and the accompanying gauges. Both these procedures will be explained in the following paragraphs.

The vertical reaction test is done with the help of a total load cell. The test is conducted in such a way that the casing rod is mounted on the bracket and the load is applied until the rear truck wheels lift up and this reaction roughly indicates how much vertical reaction can be applied before the rear of the truck pulls up. A plot of the reaction test conducted for the Mobil B61 drill rig is shown in Figure 10.

Before calibrating the Dutch Cone system, it is essential that all moving parts such as inner rods, cone assemblies,

ClibPDF - www.fastio.com

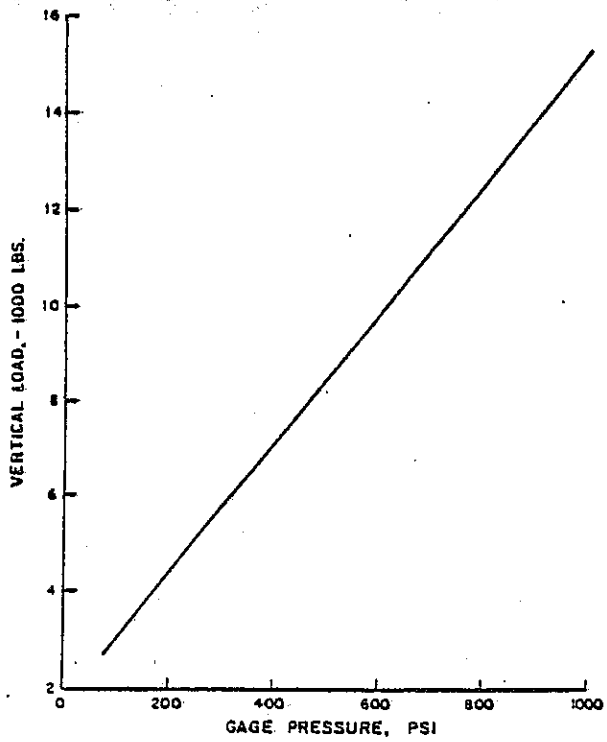

FIGURE 10 VERTICAL REACTION TEST FOR MOBIL B 61

etc., be free from rust or any other friction-causing agent. The various parts can be wiped clean and sprayed with a lubricating solvent before and after each day's work. The load cell and the accompanying gauges may be calibrated with the help of a hydraulic press. Mount the load cell unit on the press and move it downward until the extender rod makes contact with the calibrated load cell with an electrical readout. Apply load with an hydraulic press, and record corresponding readings of the two load cells. If the two sets of readings do not correlate with each other, a correction chart has to be drawn up so that from the slope of this line the corresponding correction factors applied to them.

ClibPDF - www.fastio.com

Testing Procedures

The American Society for Testing and Materials has proposed a tentative method with a designation called D3441-75-T. Its title is "Tentative Method for Deep, Quasi-Static Cone and Friction Cone Penetration Tests of Soil"(5). Even though this tentative method has been proposed, it needs to be supplemented by the following information that has been presented in this report.

The adjustments and the procedures needed to conduct the various kinds of tests with the two types of cones will be explained. The cone can be used for conducting two types of tests, namely continuous as well as discontinuous tests.

In the continuous test, the cone will be continually pushed through the soil and readings recorded either manually or with an automatic recorder. In the discontinuous method, the cone penetrometer readings are taken at various intervals of depth. The traditional interval at which these readings are taken in a discontinuous test is 20 cm. When the friction jacket cone is used, only one method can be used and it will be called here, discontinuous, similar in operation to the cone method.

Before the testing procedures are explained, it is well to remember that the Dutch Cone Penetrometer consists basically of sounding tubes, inner rods, load cells, ring for continuous sounding, and extending rod. The first three parts of these components have been described previously. The ring for continuous sounding is used with four Allen head screws and is attached to the bottom of

ClibPDF - www.fastio.com

the pressure plate with the letters "A" on each piece aligned to match. The extending rod is 75mm long and is used in conjunction with the pressure sleeve above. Both the ring and the extending rod are used only for continuous testing.

Continuous Sounding Procedure

The detailed procedure can be found in the ASTM method referred to above. It will be summarized here also. The continuous sounding ring is attached to the load cell with the four screws. The next step is to load the lead sounding tube. For this the inner rod is inserted from the lower end. The 75mm extender rod is inserted next from the lower end. The jacket cone is screwed to the pin end of the sounding tube. Using the Mobil B61 drill rig, another sounding tube and inner rod will have to be assembled before pushing. It is made sure that the two sounding tubes are plumb with the rod and head on the pressure sleeve of the load cell. The lever of the load cell can be in any position. Lower the cell and make sure the shoulder of the sounding tube is in the pressure sleeve. The sounding tube is marked in 20 cm increments. The drill engine is operated at 1000 rpm using the main bypass valve and the feed rate control. Now push the sounding tube at the rate of 2 cm per second. The pressure gages are read at 20 cm increments. This operation is shown pictorially in Figure 11.

Discontinuous Sounding Procedure Using Friction Jacket Cone

In this procedure, neither the continuous sounding ring nor the 75mm extender rod are used. Only the inner rod is inserted into the lead sounding tube. The friction jacket

ClibPDF - www.fastio.com

cone is screwed onto the pin end of the sounding tube. If the Mobil B61 drill rig is used another sounding tube and inner rod are required. At this point in time, the cone and the rod under the load cell pressure plate are made plumb. The lever on the load cell is placed to the left in the small slot. As usual the sounding tube should have already on it marked 20 cm increments. The cone can now be pushed to the

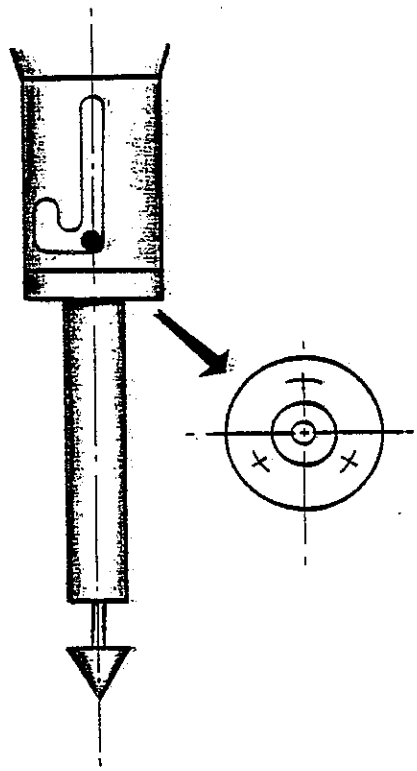

FIGURE 11 LEVER POSITION IN CONTINUOUS SOUNDING WITH CONE

ClibPDF - www.fastio.com

20 cm depth. The load cell can now be raised slightly and the load cell lever pushed to the right under the long slot. When one looks into the slot the lower load cell and the inner rod touch each other. The engine should be now running at 1000 revolutions per minute. Two readings can now be obtained in a single continuous stroke at a rate of penetration of 2 cm per second. The first reading which will be taken will be the cone friction and the second reading would be the sum of the cone friction and the friction sleeve resistance. It is to be noted that the outer sounding tube does not move during this operation. The movement of the inner rod can be observed through the long slot of the load cell.

After the inner rod, cone, and sleeve have been advanced, the load cell is raised slightly and the lever is moved to the left into the short slot. The load cell is lowered now, pushing the sounding tube downward to the next increment of 20 cm. The 20 cm push would have closed the cone and the friction sleeve and kept it ready for the next sounding run. The load cell is raised slightly and the lever is moved to the right under the long slot and the procedure is repeated for this discontinuous sounding procedure.

The lever positions for this sounding method are shown in Figure 12.

Discontinuous Sounding Procedure Using Jacket Cone

Discontinuous sounding with the jacket cone is very similar

ClibPDF - www.fastio.com

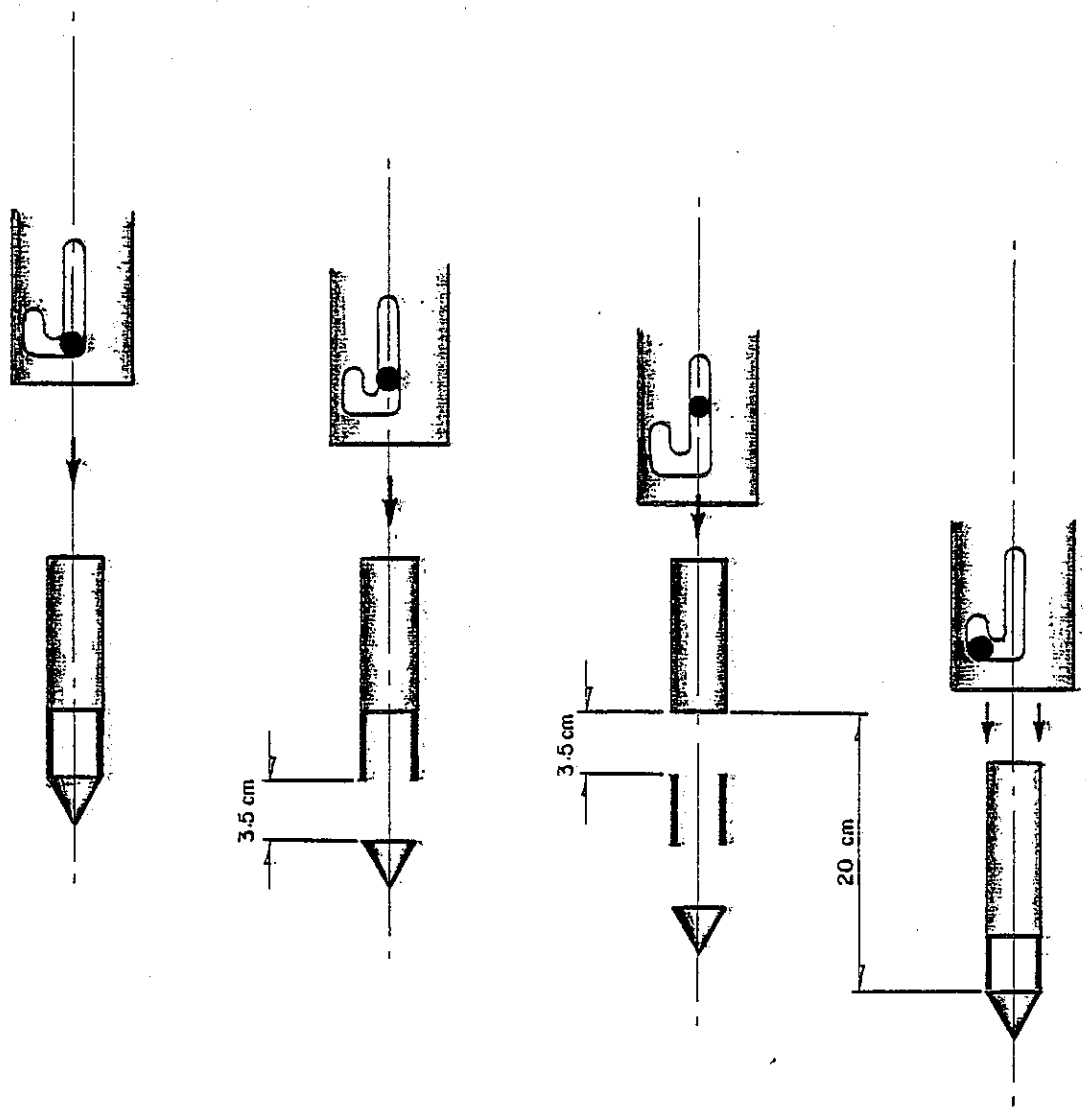

FIGURE 12 LEVER POSITIONS IN DISCONTINUOUS SOUNDING WITH FRICTION JACKET CONE

ClibPDF - www.fastio.com

to that for the friction jacket cone explained above. However, in contrast to the friction jacket cone, only one reading is made per test depth.

First the cone and the rod are advanced to the next testing depth with the lever in the locked position. Then the downward pressure is removed and the lever is put into the test position. The cone can now be advanced 5 cm and the resultant pressure can be recorded. This procedure could be repeated throughout the depth of the hole. If needed, one may, of course, bypass an area by pushing cone and rod in the locked position until the desired area is reached.

The lever positions for this procedure are presented in Figure 13.

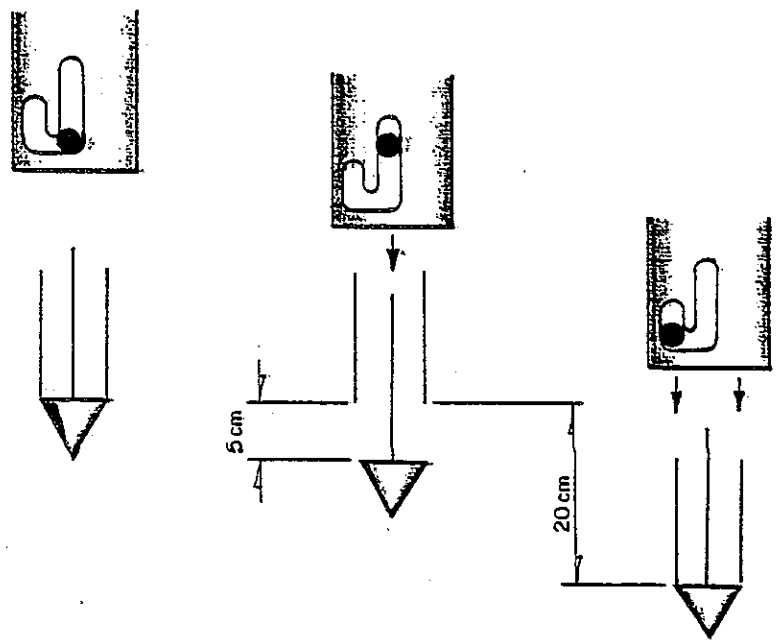

FIGURE 13 LEVER POSITIONS IN DISCONTINUOUS SOUNDING WITH JACKET CONE

ClibPDF - www.fastio.com

Example

A typical example of a field test sheet is shown in Figure 14. The Dutch Cone test data from Figure 14 is manually reduced and plotted as depth profiles in Figure 15.

Rod Retrieval

The load cell is first removed from the bracket. The extractor head is placed in the hole and the tube extractor is placed through the extractor head. The tube extractor is screwed into the sounding tube and the tubes are raised to a convenient height. Care should be exercised during the unscrewing of sounding tubes, otherwise the inner rods will slip, or slip out and fall. To prevent the sounding tubes from sliding back into the hole, pipe/bench vise should be used.

Lateral Friction

The manufacturer has supplied a tube called lateral friction reducing section tube. This is shown in Figure 16. The purpose of this friction reducing tube is to increase the penetrometer depth capacity. This special rod which has an enlarged diameter or special projections is attached to the main rod just above the cone penetrometer. When this rod

FIGURE 16 LATERAL FRICTION REDUCING SECTION TUBE

ClibPDF - www.fastio.com

OFFICE OF TRANSPORTATION LABORATORY

SOIL MECHANICS AND PAVEMENT BRANCH

DUTCH CONE PENETROMETER DATA

JOB NO. 632136 | INSPECTOR J. Macfarlane

SITE NO. 1 HOLE DC-2 | CREW Wells, Chapman

☐ CONTINUOUS ☒ DISCONTINUOUS | WATER LEVEL _____ DATE 6/24/

NO.	DEPTH (cm)	CONE READING kgf/cm²	TOTAL RESISTANCE kgf/cm²	RATE OF PENETRATION cm/sec.	REMARKS
	0				
1	20				
2	40				*Sounding tube only
3	60	79	130	1-2	
4	80	80	120		
5	100	62	80		
6	120	74	108		
7	140	57	80		
8	160	26	43		
9	180	21	41+		
10	200	36	48	1-2	
11	220	35	44	✓	
12	240	35	51	✓	
13	260	35	48	✓	
14	280	42	56	✓	
15	300	37+	58+	✓	
16	320	35	52+	1-2	
17	340	15	27	✓	
18	360	5	14	✓	
19	380	4	8	✓	
20	400	5	11	✓	
21	420	12	14		
22	440	28	31		
23	460	10	22		
24	480	14	19+		

FIGURE 14 TYPICAL EXAMPLE OF A FIELD SHEET

ClibPDF - www.fastio.com

OFFICE OF TRANSPORTATION LABORATORY

SOIL MECHANICS AND PAVEMENT BRANCH

DUTCH CONE PENETROMETER DATA

JOB NO. 632136 | INSPECTOR J. Macfarlane

SITE NO. 1 HOLE DC-2 | CREW Wells, Chapman

☐ CONTINUOUS ☒ DISCONTINUOUS | WATER LEVEL _____ DATE 6/24/76

NO.	DEPTH (cm)	CONE READING kgf/cm²	TOTAL RESISTANCE kgf/cm²	RATE OF PENETRATION cm/sec	REMARKS
25	500	12	16	1-2	
26	520	5	8	2-4	
27	540	3	5	1-2	
28	560	4	6	✓	
29	580	3	7	✓	
30	600	3	6	✓	
31	620	2	5	✓	
32	640	2	4	✓	
33	660	2	4	✓	
34	680	3	5	✓	
35	700	2	4	✓	
36	720	2	4	✓	
37	740	3	5	✓	
38	760	3	5	✓	
39	780	3	6	✓	
40	800	4	7	✓	
41	820	3	7	✓	
42	840	3	4	✓	
43	860	2	6		
44	880	2+	4+		
45	900	1	7		
46	920	4-	7		
47	940	3	8		
48	960	5	6		
49	980	6	10		32

14

ClibPDF - www.fastio.com

OFFICE OF TRANSPORTATION LABORATORY

SOIL MECHANICS AND PAVEMENT BRANCH

DUTCH CONE PENETROMETER DATA

JOB NO. 632136 | INSPECTOR J. Macfarlane

SITE NO. 1 HOLE DC-2 | CREW Wells, Chapman

☐ CONTINUOUS ☒ DISCONTINUOUS | WATER LEVEL _____ DATE 6/24/

NO.	DEPTH (cm)	CONE READING kgf/cm²	TOTAL RESISTANCE kgf/cm²	RATE OF PENETRATION cm/sec	REMARKS
50	1000	10	12	2-4	
51	1020	7	9	1-2	
52	1040	4	6	✓	
53	1060	4+	9	✓	
54	1080	5	8-	✓	
55	1100	13	15	✓	
56	1120	14	22	✓	
57	1140	22	25	✓	
58	1160	25	34	✓	
59	1180	20	26	✓	
60	1200	19	26	✓	
61	1220	29	35	✓	
		End of Sounding			

14

ClibPDF - www.fastio.com

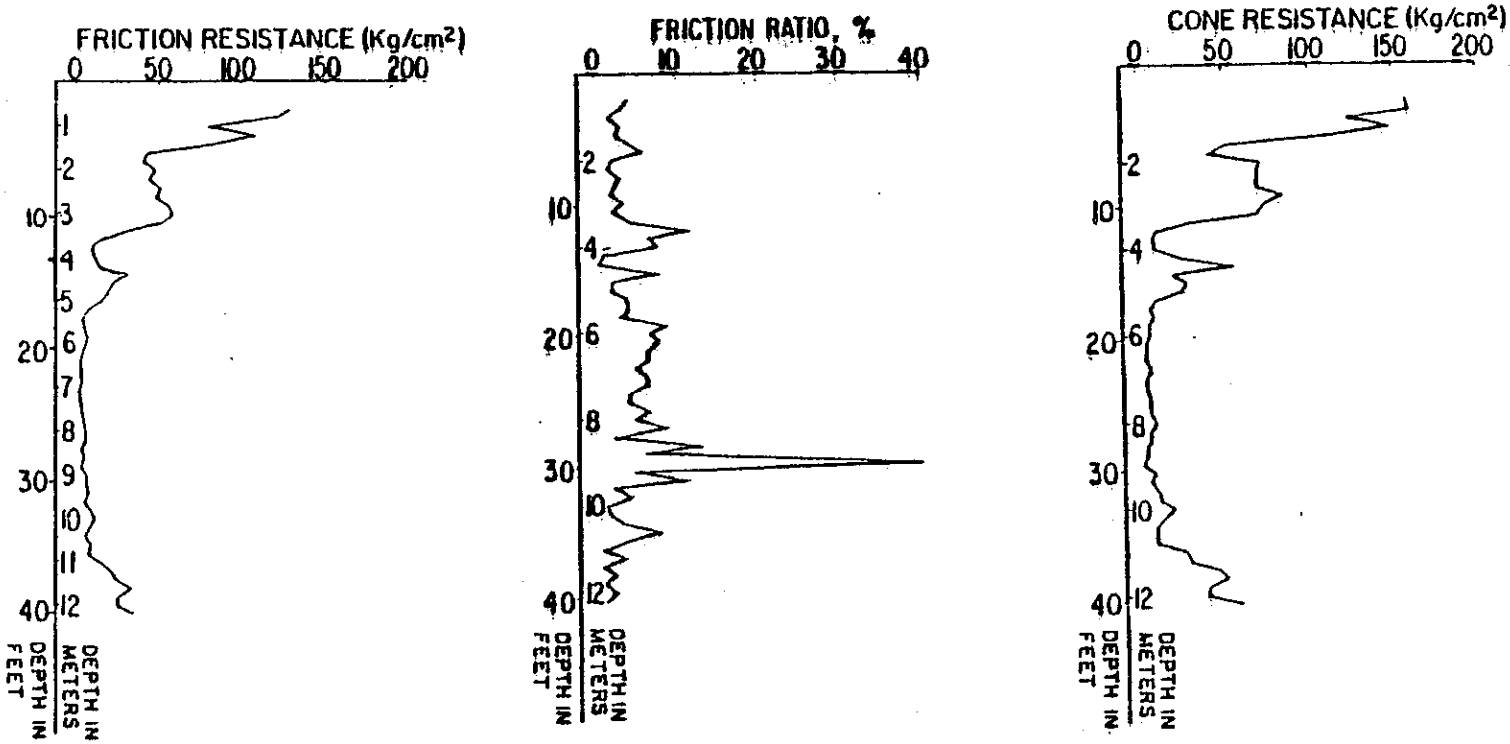

FIGURE 15 DEPTH PROFILES OF DUTCH CONE TEST DATA, SITE 1

ClibPDF - www.fastio.com

is pushed with the rest of the sounding rods into the ground, it creates a hole which has a diameter larger than the diameter of the cone. This causes the reduction in friction and thus increases the penetrometer depth capability.

ClibPDF - www.fastio.com

Chapter 5

STANDARD PENETROMETER

The standard penetrometer is the earliest of the in situ devices in use in the USA. It has been used by the industry for many years. The ASTM method was used to conduct the test (8). This test has no theoretical basis even though attempts are being made by a few to establish it. Innumerable correlations exist in the literature and in the building codes around the world which need to be used with caution regionally.

Calibration

Calibrating the standard penetrometer is more or less a matter of keeping the Mobil B61 in good condition. The sampler should be clean and free from rust. The drive shoe should be clean and free from defects. The proper rod, namely A-rod should be used. The hammer and the slide should be maintained so that a true free fall may be achieved. Since the free fall distance is 30 inches it might be subject to human error.

Testing Procedures

The recommended method of conducting a standard penetrometer test is fully documented in the American Society for Testing and Material Designation No. D 1586-87. The title of this test is "Standard Method for Penetration Test and Split Barrel Sampling of Soils"(8).

ClibPDF - www.fastio.com

Example

A typical example of a field sheet is presented in Figure 17. A typical plot of SPT test data corrected for overburden pressure is presented in Figure 18.

ClibPDF - www.fastio.com

STATE OF CALIFORNIA — DIVISION OF HIGHWAYS
MATERIALS and RESEARCH DEPT.

BORING RECORD

Location: Site 1, W-X Sts. Sacto.
Dist. — Co. — Rt. — Sec. — Const. W.O. —
Ft., Right, Left — P.M. Line Sta.

Sample No.		Sampled Depth	Sampled Elev.	Core Catcher Used	% Rec.	Retained Sample Core Box No.	Retained Sample No. Tubes	Retained Sample No. Jars
1	From	8.6						2
	To	10.0					Core Length	18"
2	From	10.0						1
	To	11.6					Core Length	
3	From	11.6						1
	To	13.0					Core Length	
4	From	13.0						1
	To	14.6					Core Length	
5	From	14.6						1
	To	16.0					Core Length	18"

Rig Used
Type of Sampler
Type of Point: Regular: Extension:
Sample Nos.
Type of Core Barrel
Type Bit Used: Number: From: To:

GROUND WATER DATA

Time	Depth to Water	Bot. Bor.	Time	Depth to Water	Bot. Bor.

Boring Flushed: Depth:
Boring Bailed: Depth
Boring Cased: Depth
Dia., & Type P.M.P. Casing
Type of Casing Cap.

REMARKS

Weather: Fair, warm

using spoon 2-3"
(liner type)

TO LABORATORY

Elev. Datum — Surface 11.26
Dia. of Sampler 1-4" Wt. of Hammer 140#
Date 6-10-76 Job No. 632136
Page 1 of 3 Boring No. P-1

Depth	Blows Per Ft.		Tubes	Wet Wt. Per cu. ft.	Moist. % dry wt.	LOG OF MATERIAL
						Augered fill mat'l.
						Damp, compact, Sd Si
5						
8						Start penetration test at 8.5'
9	4	1	1B			Wet, firm, brown, Sd Cl Si
Gw	11		1A			Change to wet, firm brown
10	12		1A			and gray Sd Si Cl with organics
	5		X			Saturated, soft brown Si Sd
11	6	2	2A			6" of saturated sand dropped
	12		2A			out of sample. NOT recovered
12	4		X			Saturated brn Cl Sd-material
	5	3	X			lost - scrapings from barrel
13	9		3A			in jar 3A
	2		X			Saturated, very soft, brn Sd Cl
14	2	4	4A			
	4		4A			
15	2		X			Same to 15'
	2	5	5B			Change to wet, soft, gray
16	4		5A			Si Cl medium plastic

FIGURE 17 TYPICAL STANDARD PENETROMETER TEST SHEET

ClibPDF - www.fastio.com

STATE OF CALIFORNIA — DIVISION OF HIGHWAYS
MATERIALS and RESEARCH DEPT.

BORING RECORD

Location: Site 1, W-X Sts.
Dist. ____ Co. ____ Rt. ____ Sec. ____ Cont. W.O. ____
____ Ft., Right, Left ____ P.M. Line Sta. ____

Sample No.	Sampled	Depth	Elev.	Core Catcher Used	% Rec.	Retained Sample: Core Box No.	No. Tubes	No. Jars
6	From	16	NO RECOVERY					
	To	17.6				Core Length		
7	From	18.6						
	To	20.0				Core Length		
8	From	20.0						
	To	21.5	NO BLOWS			Core Length		
9	From	21.5						
	To	23				Core Length		
10	From	24						
	To	25.5				Core Length		

Rig Used
Type of Sampler
Type of Point: Regular Extension
Sample Nos.
Type of Core Barrel
Type Bit Used: Number: From: To

6-11-76 GROUND WATER DATA

Time	Depth to Water	Depth to Bot. Bor.	Time	Depth to Water	Depth to Bot. Bor.
0800	9.7				

Boring Flushed: Depth:
Boring Sealed: Depth:
Boring Cased: Depth:
Dia., & Type P.M.P. Casing:
Type of Casing Cap:

REMARKS

Weather: Fair, warm

Elev. Datum: Surface
Dia. of Sampler:
Wt. of Hammer: 140 #
Date: 6-10-76
Job No. 632136
Page 2 of 3
Boring No. P-1

Depth	Per Ft.		Tubes	Wet Wt. per cu. ft.	Moist. % dry wt.	LOG OF MATERIAL
16	2		X			Saturated, very soft, gray SiCl
17	2	6	X			Sample lost
	4		X			
18						Very soft, 1' penetration with rod weight only – NO BLOWS
19	5					
	4	7				(Very soft)
20	5					
						Hand Push
21		8				
						Sample lost
22	6					Wet, soft, gray SiCl
	6	9				highly plastic
23	7					
						Hand Push – very soft
24	4					Sample lost – very soft
25	3	10				
	3					

ClibPDF - www.fastio.com

STATE OF CALIFORNIA — DIVISION OF HIGHWAYS
MATERIALS and RESEARCH DEPT.

BORING RECORD

Location: Site 1, W-X Sts., Sacramento

Dist. ____ Co. ____ Rt. ____ Sec. ____ Cont. W.O. ____ M.D.M. ____ Line Sta. ____ Ft., Right, Left ____

Sample No.		Sampled Depth	Sampled Elev.	Core Catcher Used	% Rec.	Retained Sample Core Box No.	No. Tubes	No. Jars
11	From	26.5						2
	To	28.0					Core Length	18"
12	From	28.0		Sample				0
	To	29.6		Lost			Core Length	—
13	From	29.6						
	To	31.0					Core Length	
	From							
	To						Core Length	
	From							
	To						Core Length	

Rig Used:

Type of Sampler:

Type of Point: Regular: Extension:

Sample Nos.:

Type of Core Barrel:

Type Bit Used: Number: From: To:

GROUND WATER DATA

Time	Depth to Water	Bot. Bor.	Time	Depth to Water	Bot. Bor.

Boring Flushed: Depth:

Boring Bailed: Depth:

Boring Cased: Depth:

Dia., & Type P.M.P. Casing:

Type of Casing Cap:

REMARKS

Weather: Fair, warm

TO LABORATORY

Elev. Datum: Surface

Dia. of Sampler: ——

Wt. of Hammer: 140 #

Date: 6-11-76

Job No. 632136

Page 3 of 3

Boring No. P-1

Depth	Per Ft.		Tubes	Wet Wt. per cu. ft.	Moist. % dry wt.	LOG OF MATERIAL
25						(See page 2)
26						Hard Push, very soft gray, plastic clay.
27	3		B			Wet, soft, gray Si Cl
	4	11	B			highly plastic.
28	5		A			Change to saturated, compact
	2					fine Si Sd.
29	2	12				Saturated, loose, fine gray Sd.
	3					(sample lost)
30	4		B			Wet, soft, gray Sd Cl
	5	13	B			Change to saturated, compact,
31	8		A			fine gray sand.
						Bottom of boring. 6-11-76

ClibPDF - www.fastio.com

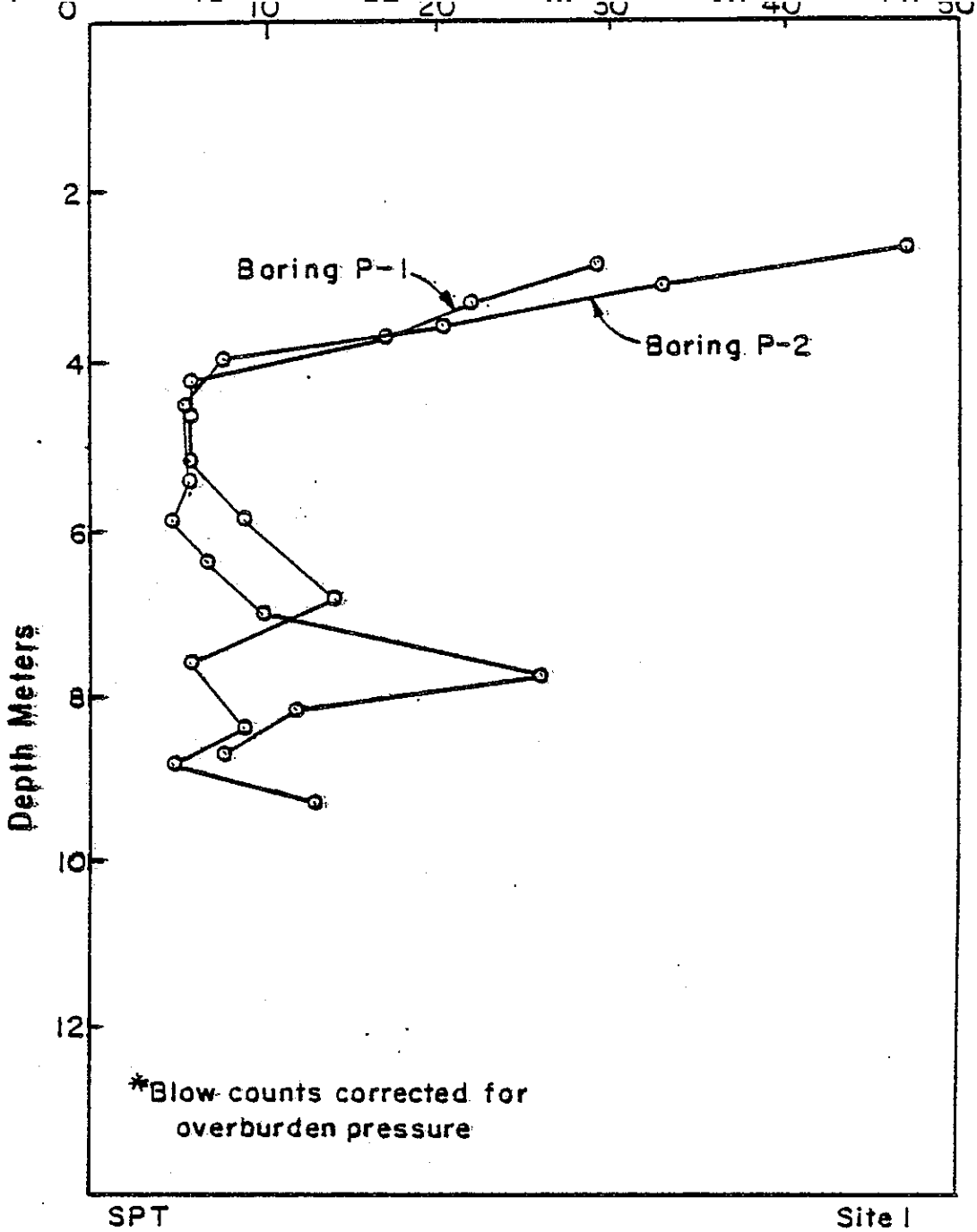

FIGURE 18 TYPICAL PLOT OF STANDARD PENETROMETER TEST DATA

ClibPDF - www.fastio.com

Chapter 6

CAMBRIDGE SELF BORING PRESSUREMETER

The Cambridge Self Boring Pressuremeter is the most recent in situ device to be marketed from Cambridge, England. It is a very sophisticated in situ device. The instructions from the manufacturer needed to be modified for Caltrans use. This chapter presents the procedures in an abridged form. An expanded and a more complete calibration and testing procedure has been prepared (9) recently.

Calibration

The calibration must be done in two parts. The first part relates to strain measurement and can be done in the laboratory. The second part adjusts the pore pressure cell and the total pressure measuring mechanism and may be done either in the laboratory or in the field. The laboratory calibration for strain is explained below.

First, the probe is set up in a horizontal position on V-blocks without a membrane. The radial arms are free to extend. Locking two arms in the closed position with screws, the third arm is extended while its radial extension is being measured electrically and mechanically (Figure 19). Mechanical measurements are made with a dial indicator to the nearest 1/100 of an inch. Electrical measurements are made with a digital voltmeter, via the strain position on the "bodge" box, to the nearest 1/1000 of a volt. The arm

ClibPDF - www.fastio.com

ClibPDF - www.fastio.com

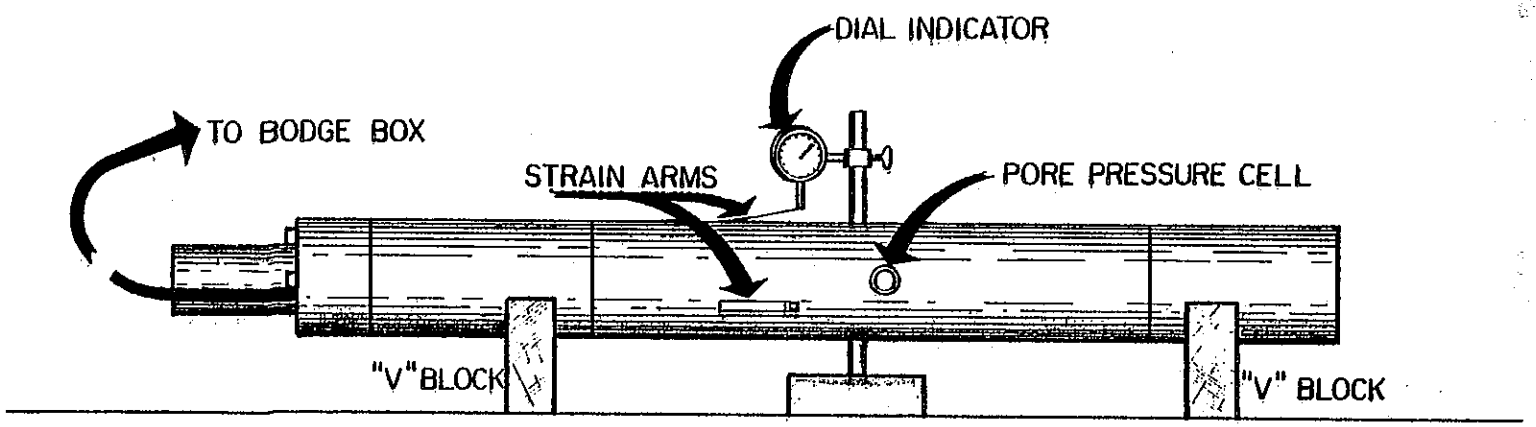

FIGURE 19 LABORATORY CALIBRATION OF RADIAL (STRAIN) ARMS

is extended in increments of .05 inch while corresponding voltages are recorded from the digital voltmeter (DVM). The procedure is repeated for all three arms. Then the sum of the voltages for the three arms is tabulated for each .05 inch incremental movement and the average in./volt is calculated, giving the multiplication factor for strain; i.e., voltmeter reading (DVM) x multiplication factor = radial strain in inches.

The total pressure cell and the pore pressure cells can now be calibrated. As mentioned above, this procedure can be done in the laboratory or in the field. The following procedure is adopted:

With the membrane in place, position short sections of extra membrane or large rubber bands at both ends of the membrane to serve as seals between the membrane and calibration tube. Slide the calibration tube over the probe and secure the probe in an upright position. The tube should be positioned so the two holes in the sides of the tube are aligned with the pore pressure cells, thus exposing them to atmospheric pressure.

After making the electrical connections, record the zero readings of each circuit - strain, total stress, and effective stress.

Connect the probe to the pressure supply and exercise the cells at least twice through the entire working pressure range. Then using small increments of pressure, inflate the membrane to its required maximum while recording the total and effective stress readings at each pressure increment. The strain circuit should touch the sides of the

ClibPDF - www.fastio.com

calibrating tube, which would be equivalent to 7 percent radial strain at 2 psi ± depending on the elasticity of the membrane.

After the maximum pressure has been reached, reverse the procedure and decrease the pressure while reading total and effective stresses on the way down to zero pressure.

A multiplication factor can be calculated for both total and effective stresses by dividing each pressure increment by its voltage equivalent and determining the average in psi/volts.

After the field calibration has been completed, it should be checked against the laboratory calibration before any testing is begun.

Testing Procedures

The testing procedure involves many steps. These steps are itemized below:

1. The necessary connections need to be made between the probe and the monitoring system, between the probe and the drilling rig.

2. Setting up the drilling rig over the hole and getting the mud pump as well as the mud tank and all the necessary connections to be made.

3. The monitoring system by means of which the pressure is applied to the probe and the signals recorded. This

ClibPDF - www.fastio.com

would consist not only of the console with valves and gauges designed by Caltrans (Figure 20) but also the connections to the gas cylinder and the connections to the digital multimeter and the connections of the X-Y-Y plotter.

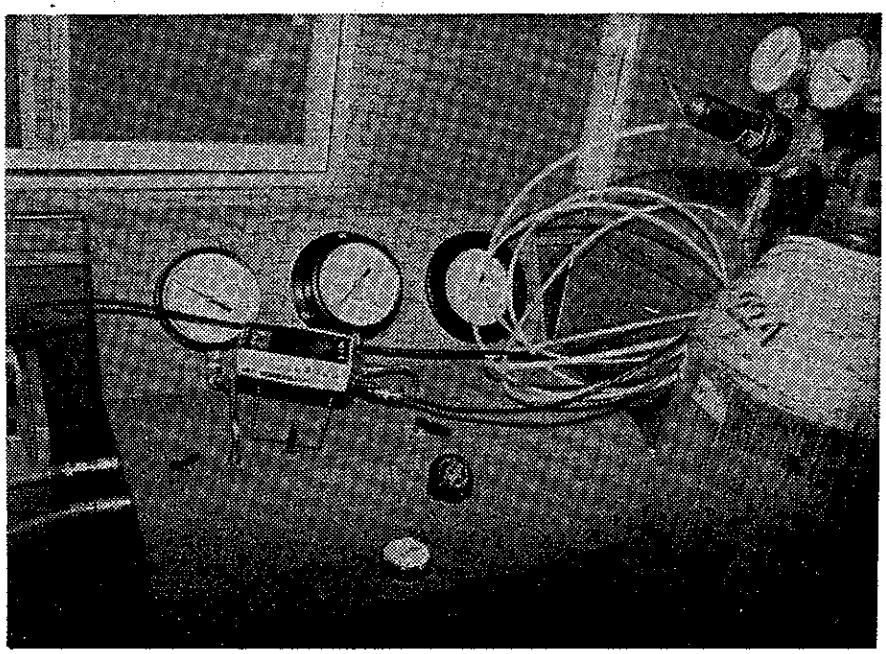

FIGURE 20 CALTRANS CONSOLE FOR APPLYING PRESSURE

4. Making sure of the vacuum system. This system is necessary to apply the vacuum to the measurement membrane so that while the membrane is being inserted in the hole it will not be damaged by soil particles.

5. Applying the pressure in increments to conduct constant rate of stress test through a system of valves and gauges. As it is understood, various tests including cyclic test as

ClibPDF - www.fastio.com

well as normal expansion tests could be conducted. And finally,

6. Methods of recording test data.

The above six steps would form the necessary basic steps needed to conduct a self boring pressuremeter expansion test as well as cyclic tests.

The detailed steps that are necessary to accomplish the above mentioned six steps are explained below.

Certain steps must be taken before a test is begun. First mount the probe on the drill rig. Then couple the drive rod to the hydraulic cutter drive unit. Next, connect the probe's gas supply line to the pressure system and also make the electrical connection between the probe and the "bodge" box. If an X-Y-Y plotter is available, hook it to the appropriate jacks on the bodge box; then connect a digital voltmeter to the meter jacks. At this point, the operator should set the span on the X-Y-Y plotter and perform the field calibration.

Before the probe is mounted, the drill rig is moved into position. If the surface layer is of an undesirable nature, it should be drilled or augered through using conventional methods. To insure that rocks or any other surface material do not fall in, the hole should be cased through the problem area. The casing should be at least four inches in diameter. It may also be necessary to use drilling mud to lift or remove coarse particles and to keep the hole open.

ClibPDF - www.fastio.com

A recirculation tank, with a light drill mud, should be incorporated for supplying the fluid for the self boring process. A mud pump would take the fluid from the tank and force it through a hose, with a water swivel connection at the terminus of the probe's drive shaft, and then through the chopping tool. At this point, the water would mix with the soil cuttings and the resulting slurry would be forced up through the probe and casing, out the swept tee and back into the tank. A screen should be used to keep rocks and other harmful debris from entering the recirculation tank.

In order to distribute the pressure to the probe from the tank it was appropriate to build a system of valves and gauges so the process could be more completely controlled. For added convenience, quick disconnects were added to the circuitry.

The entire system was built into a plywood box with the quick disconnects mounted on both right and left sides and valves and gauges mounted on top (Figure 21).

The system was also designed so a vacuum pump could be incorporated for holding the membrane tightly against the probe's body while the self boring process is under way.

A step by step procedure for applying the vacuum (Figure 21) is as follows: Isolate pressure gauges and regulator from the vacuum by closing Valves V3 and V4. Open Valves V1 and V2. Connect line from vacuum pump. Start pump and set for 5± inches of mercury. (If nonregulating type pump, close Valve V1 and turn off pump when 5± inches is attained.) When test depth is reached, immediately release vacuum by opening Valve V1 to atmosphere.

ClibPDF - www.fastio.com

ClibPDF - www.fastio.com

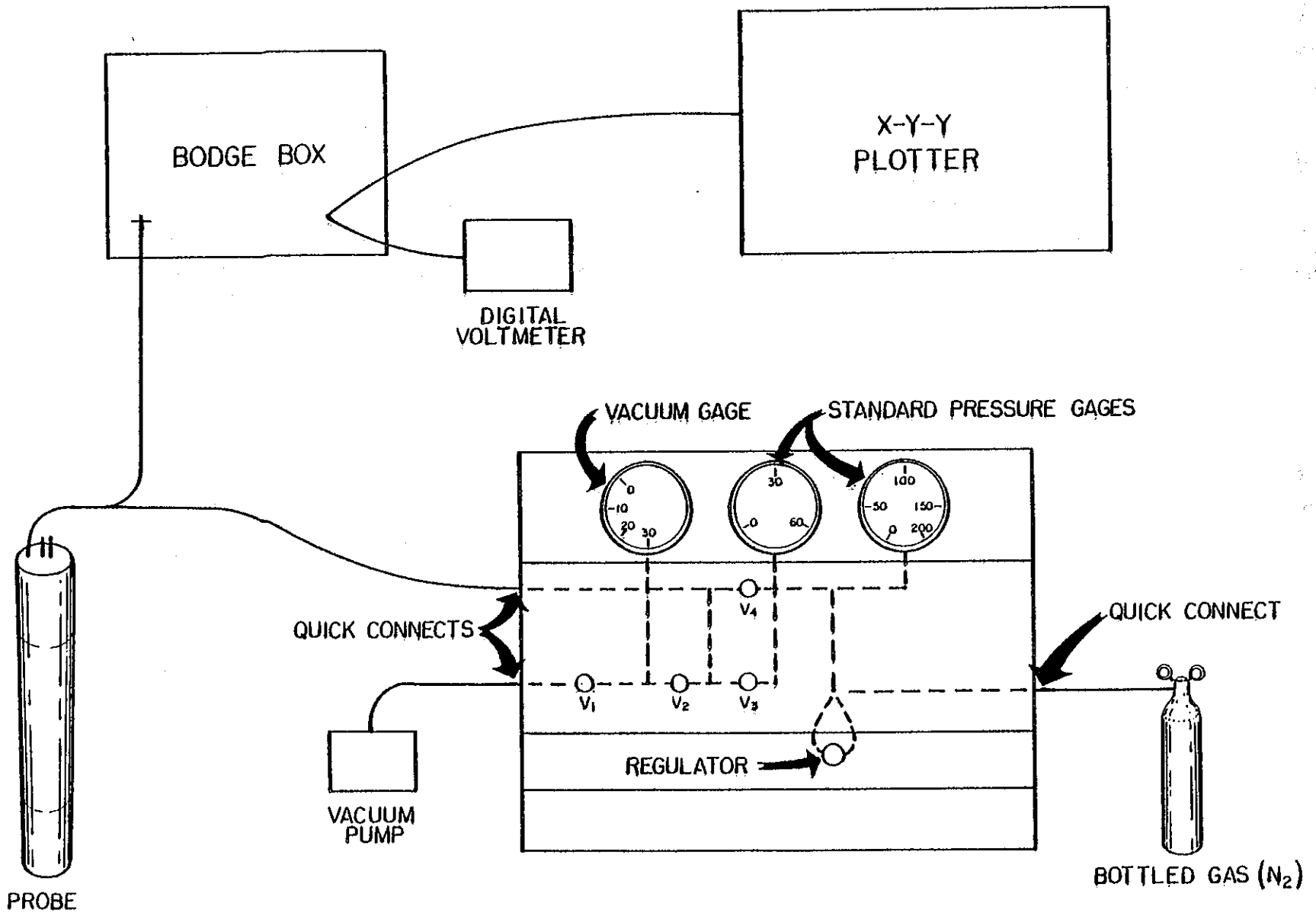

FIGURE 21 INTERNAL SET UP OF CALTRANS CONSOLE

The procedure for applying pressure is basically the same for testing and calibrating and is as follows: Make sure the regulator adjusting screw is backed off for zero pressure. Check gas bottle gauges to insure that no pressure exists in the line. Attach input line (from bottle) to pressure distribution box (in this case, by coupling quick disconnect). Attach output line (to probe) to pressure distribution box. Open gas bottle valve. Adjust bottle regulator pressure for maximum pressure to be used in test. Close Valve V2 and open Valves V3 and V4. When the test depth has been successfully attained, release the vacuum and record values of each circuit. Then monitor and record the pore pressure until it has stabilized (stress relaxation). After a sufficient time for stress relaxation, start the test by turning on the plotter and start increasing gas pressure to the probe in predetermined increments and at a constant rate. While the plotter is drawing the effective and total stress-strain curves, the values from the digital voltmeter may be read and recorded manually for backup or check.

When a cyclic test is desired, the upper and lower limits of the loop should be predetermined and then the pressure can be lowered when the upper limit is reached and then raised when reaching the lower limit (using a constant stress rate).

It should be known in advance the maximum strain value of the probe's arms is 10 percent and that value should not be exceeded. At that point of strain the pressure is decreased by a constant rate of stress until zero is reached and the test is complete.

ClibPDF - www.fastio.com

Example

A typical field test sheet for Cambridge Self Boring Pressuremeter is presented in Figure 22. There are quite a few methods of reducing and interpreting field data and these are explained in References (1), (10) and (11). The field pressuremeter curve when reduced and plotted will be like the one shown in Figure 23.

ClibPDF - www.fastio.com

OFFICE OF TRANSPORTATION LABORATORY

SOIL MECHANICS AND PAVEMENT BRANCH

CAMBRIDGE PRESSUREMETER TEST

DATE	SITE NO.	HOLE NO.	TEST NO.	DEPTH	WATER TABLE	TEST TYPE
11/7/79	Dunbr. Br.	CPM 2	2	20.5	—	N

CREW: Leech, Hall, Nunes, Macfarlane

CALIBRATION DATA — NO GAS PRESSURE IN MEMBRANE

TOTAL PRESSURE	STRAIN (mV)			EFFECTIVE PRESSURE	
TPC (mV)	ARM 1	ARM 2	ARM 3	PPC — A	PPC — B
Cal. .212	.467	.482	.472	.603	.662
Zero .010	.040			.085	

SCALE: TOTAL PRESS. 5 mV/cm; EFF. PRESS. / STRAIN 25 mV/cm

RELAXATION			
TIME	TOTAL PRESSURE	STRAIN	EFF. PRESSURE
0923	.006	.044	-.018
0925	✓	✓	-.026
0927	✓	✓	-.025
0929	.007	.041	✓
0933	✓	✓	-.026
0943	.006	.043	-.028
0953	.009	.042	-.020

REMARKS

Start — 0850
Stop (add rod 0854
Start 0914
Cutter Set Back = 1/4"

FIGURE 22. TYPICAL CAMBRIDGE PRESSUREMETER TEST SHEET.

Sheet 1 of 2

ClibPDF - www.fastio.com

OFFICE OF TRANSPORTATION LABORATORY

SOIL MECHANICS AND PAVEMENT BRANCH

CAMBRIDGE SELF-BORING PRESSURMETER TEST SHEET — DATE: 11/7/79

TEST READING				TEST READING			
PSI	TOTAL PRESSURE	STRAIN	EFFECTIVE PRESSURE	PSI	TOTAL PRESSURE	STRAIN	EFFECTIVE PRESSURE
0	·009	·042	−·020	15	·070	·358	·081
1	·015	✓	−·007	10	·050	·088	·071
2	·020	✓	−·001	5	·034	·042	·041
3	·023	✓	+·007	0	·008	·044	−·008
4	·027	✓	+·011	Time →	1007		
5	·030	✓	·021				
6	·034	·043	·026				
7	·037	·044	·035				
8	·042	✓	·040				
9	·045	·045	·049				
10	·048	✓	·054				
11	·052	✓	·062				
12	·056	✓	·067				
13	·059	✓	·077				
14	·064	·047	·083				
15	·067	·054	·091				
16	·071	·068	·096				
17	·074	·092	·104				
18	·079	·125	·109				
19	·081	·160	·114				
20	·086	·200	·119				
21	·087	·259	·124				
22	·092	·333	·128				
23	·096	·415	·136				
24	·100	·532	·141				
23	·095	·622	·130				
22	·092	·605	·127				
21	·090	·589	·118				

Sheet 2 of 2

ClibPDF - www.fastio.com

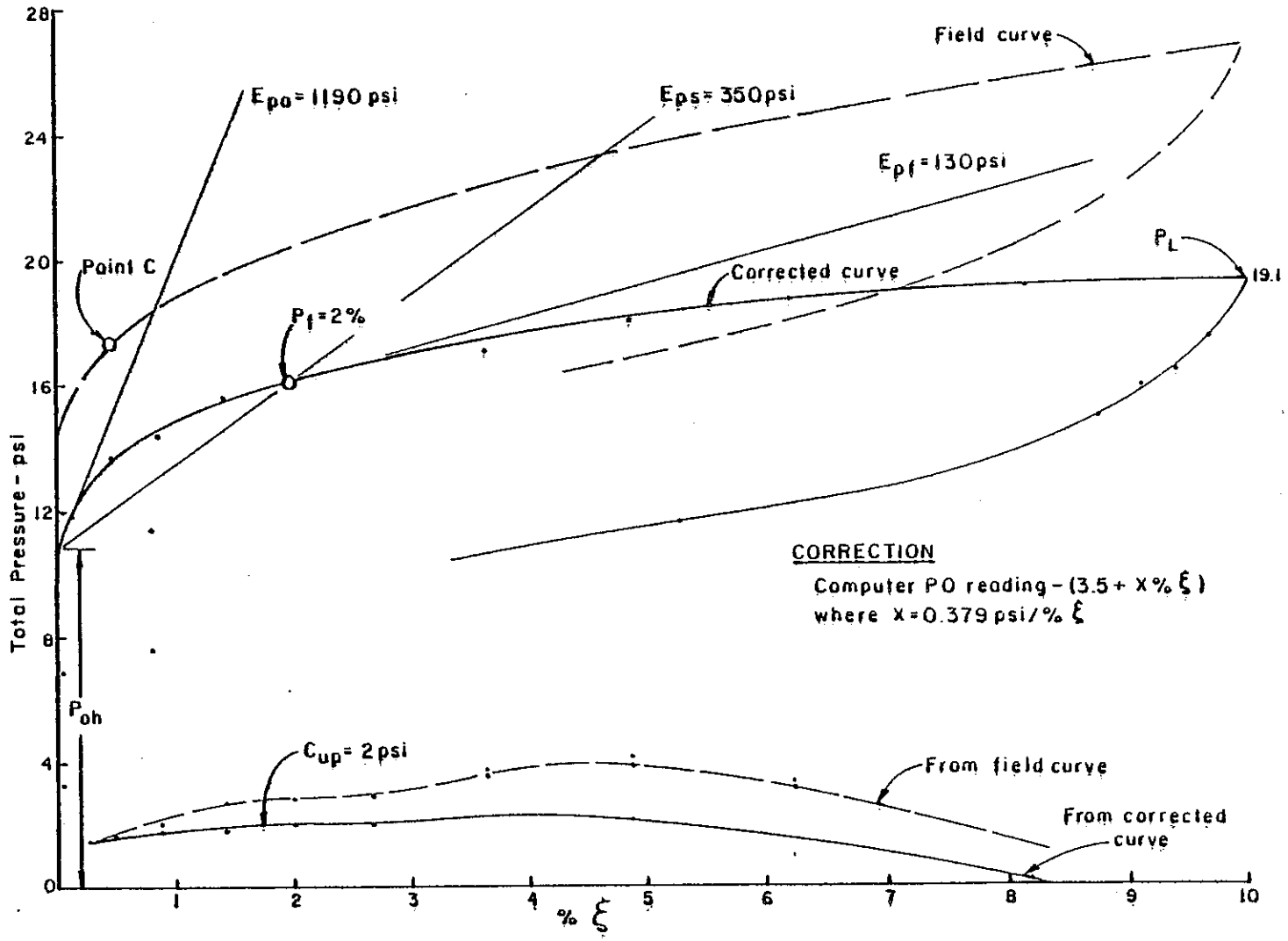

FIGURE 23. TYPICAL CAMBRIDGE PRESSUREMETER TEST PLOTS.

ClibPDF - www.fastio.com

ClibPDF - www.fastio.com

APPENDIX 1

BIBLIOGRAPHY

ClibPDF - www.fastio.com

ClibPDF - www.fastio.com

Appendix 1

BIBLIOGRAPHY

General

Analysis and Design in Geotechnical Engineering, Vol. I, U. of Texas, Austin, ASCE, June 1974.

Analysis and Design in Geotechnical Engineering, Vol. II, U. of Texas, Austin, ASCE, June 1974.

Berman, S., Measurements of Pressures Against a Deep Shaft in Plastic Clay, 2nd Int'l. Conf. SM&FE, Vol. III, 1948, pp. 300-301.

Bjerrum, L., Embankments on Soft Ground, Proc. ASCE Specialty Conf., Purdue Univ., June 1972, Vol. II, pp. 1-17.

Bjerrum, L., and Andersen, K.H., In-Situ Measurements of Lateral Pressures in Clay, Norwegian Geotech. Inst. Pub. No. 90, pp. 29-38.

Bishop, A.W., and Henkel, D.J., Pore Pressure Changes During Shear in Two Undisturbed Clays, Proc. 3rd ICSMFE, Zurich, 1953, pp. 94-99.

Calhoun, Max L., Pressure-meter Field Testing of Soils, Civil Engineering, July 1969, p. 71.

Campbell, D.B., Determination of Soil Properties In-Situ, Texas Hwy. Dept., Research Report 89-7, November 1969.

ClibPDF - www.fastio.com

Campbell, D.B., and Hudson, W.R., Determination of Soil Properties In-Situ, Research Report 89-7, Texas Hwy. Dept., November 1969.

Carlson, L., Determination In-Situ of the Shear Strength of Undisturbed Clay With Rotating Auger, 2nd Int'l. Conf. SM&FE, 1948, Vol. I, pp. 265-270.

Hobbs, N.B., and Dixon, J.G., In-Situ Testing for Bridge Foundations in Devonian Marl, British Geotech. Society, Road Research Laboratory U.K., Paper No. 4, pp. 31-38.

Huck, P.J., Pincus, H.J., Singh, M.M., Chugh, Y.P., Determination of the In-Situ State of Stress in Soil Masses, Final Report No. FHWA-RD-74-68, Fed. Hwy. Admin., Washington, D.C., September 1974.

Huck, P.J., and Singh, M.M., Measurement of In-Situ Stress in Soils, Proc. of Specialty Conf., New England College, ASCE, August 1974, pp. 269-294.

Hvorslev, M.J., Subsurface Explorations and Sampling of Soils for Civil Engineering Purposes, Waterworks Experiment Station, U.S.A.C. of E., Vicksburg, Miss., 1949.

In-Situ Measurement of Soil Properties, Vol. I, N. Carolina State U., Raleigh, ASCE, June 1975.

In-Situ Measurement of Soil Properties, Vol. II, N. Carolina State U., Raleigh, ASCE, June 1975.

ClibPDF - www.fastio.com

Jain, S.P., and Gupta, R.C., In-Situ Shear Test for Rock Fills, Journ. Geotech. Engg. Div., Vol. 100, No. GT9, September 1974.

Ladd, C.C., Prediction of In-Situ Stress Strain Behavior of Soft Saturated Clays During Undrained Shear, Norwegian Geo. Inst. Public., 1969.

Lambe, T.W., Effective Stress Path, ASCE Journ. SMFD, June 1964 and November 1967.

Lohnes, R.A., and Handy, R.L., Tests for Soil Creep, ASTM, Soils Mech. Div. Proc., 1967.

Lohnes, R.A., and Handy, R.L., Slope Angles in Friable Loess, Journ. of Geology, Vol. 76, No. 3, May 1968.

Lowe, John, Current Practice in Soil Sampling in the U.S., HRB Special Reports, No. 60, pp. 142-154.

Massarsch, K.R., New Method for Measurement of Lateral Earth Pressure in Cohesive Soils, Canadian Geotech. Journ., Vol. 12, No. 1, February 1975.

Mitchell, R.J., An Apparatus for Plane Strain and True Triaxial Testing of Undisturbed Soils, Canadian Geotech. Journ., 1973.

Obermeier, S.F., Measured Shear Strength of Weak or Sensitive Clayey Soils, Final Report, FHWA-RD-73-47, June 1973.

ClibPDF - www.fastio.com

Rutledge, C.P., Relation of Undisturbed Sampling to Laboratory Testing, ASCE, Vol. 109, 1944, pp. 1155-1216.

Proceedings of the European Symposium on Penetration Testing, Vol. 1, State-of-the-art Reports, Swedish Geotech. Soc., 1974.

Sanglerat, G., The Penetrometer and Soil Exploration, Developments in Geotech. Eng., Textbook, 1972.

Smith, T.W., and Smith, R.E., Embankment Testing With the Menard Pressuremeter, Interim Report, Calif. Div. of Hwys., May 1968.

Subsurface Exploration for Underground Excavation and Heavy Construction, Specialty Conf. New England College, Henniker, N.H., ASCE, August 1974.

Terzaghi, K., and Peck, R.B., Soil Mechanics In Engineering Practice, John Wiley & Sons, March 1968.

Iowa Borehole Shear Device

Handy, R.L., Measurement of In-Situ Shear Strength, Proceedings of the Conference on "In-Situ Measurement of Soil Properties", Raleigh N.C., Vol. II, pp. 143-149, 1975.

Handy, R.L., and Ferguson, G., Borehole Shear Device, Proceedings of the Conference on "In-Situ Measurement of Soil Properties", Raleigh, N.C., Vol. II, pp. 168-171, 1975.

ClibPDF - www.fastio.com

Lohnes, R.A., Millan, A., Demirel, T., and Handy, R.L., Tests for Soil Creep, Engineering Research Inst., Iowa State Univ.

Nickel, S.H., Borehole Shear Device, Proceedings of the Conference on "In Situ Measurement of Soil Properties", Volume I, pp. 172-173, (1975).

Wineland, J.D., Borehole Shear Device, Proceedings of the Conference on "In Situ Measurement of Soil Properties", Volume II, pp. 511-522.

Vane Shear Device

Arman, A., Poplin, J.K., and Ahmad, N., Study of the Vane Shear, Reference No. 15, pp. 93-120.

Bennett, G. Bryce, and Mecham, J.G., Use of Vane Borer on Foundation Investigations of Fill, HRB Proc., Vol. 32, 1953, pp. 486-499.

Calding, L., and Odenstad, S., The Vane Borer, Royal Swedish Geotech. Inst., Proc., No. 2, Stockholm, 1950.

Eden, W.J., and Hamilton, J.J., Use of Field Vane Apparatus in Sensitive Clay, ASTM Symposium, STP 193, 1956, pp. 41-53.

Fenske, C.W., Deep Vane Tests in Gulf of Mexico, ASTM Symposium, STP 193, 1956, pp. 16-25.

Flaate, Kaare, Factors Influencing Results of Vane Tests, Canadian Geotech. Journal, Vol. III, No. 1.

ClibPDF - www.fastio.com

Gibbs, H.J., An Apparatus and Method of Vane Shear Testing of Soil, ASTM Symposium, STP 193, 1956, pp. 9-15.

Gregersen, O.S., Use of Vane Shear Test for Determining the Undrained Shear Strength of Clays, Reference No. 16, pp. 141-142.

Gouchnour, R.D., and Sallberg, J.R., Evaluation of the Laboratory Vane Shear Test, HRB Record, No. 48, pp. 19-33.

Hall, Earl B., and Miller, E.A., Comparison of Soil Shear Strengths as Determined with Field and Laboratory Vane Shear Apparatus, Paper No. 91, Fifth Pacific Area Nat'l. Mtg., ASTM, Seattle, 1965.

Hall, Earl B., Shear-Strength Determination of Soft Clayey Soil by Field and Laboratory Methods, Special Tech. Pub. No. 351, ASTM, 1963.

Hill, William C., Vane In-Place Soil Shear Device Developed and Applied by Oregon State Hwy. Dept., ASTM Symposium, STP 193, 1956, pp. 26-40.

Lunne, T., Correlations Between Vane Shear Strength and Cone Resistance in Some Norwegian Soft Clays, Reference No. 16, pp. 161-163.

Obermeier, S.F., Soil Shear Strength, Final Report No. FHWA-RD-73-47, Fed. Hwy. Admin., Washington, D.C., June 1973.

ClibPDF - www.fastio.com

Osterburg, J.O., Symposium On In-Place Shear Testing of Soil By the Vane Method-Instruction, STP 193, ASTM, 1956, pp. 1-7.

Standard Method for Field Vane Shear Test in Cohesive Soil, ASTM Designation D2573-72.

Symposium on Vane Shear Testing of Soils, ASTM Special Technical Publication, No. 193, June 1956, pp. 42-43.

Vane Shear Testing Program, Clifton Court Forebay, Prelim. Report and Appendix II, Dept. of Water Resources, State of Calif., November 1967.

Weber, W.G., Vane Borer Study, Final Report, Materials and Research Dept., Calif. Div. of Hwys., October 1963.

Wiesel, C.E., Some Factors Influencing In-situ Vane Test Results, Proc. VIII, Int'l Conf. SM and FE, Moscow, USSR, 1973.

Dutch Cone Penetrometer

Alperstein, R., and Liefer, S.A., Site Investigation With Static Cone Penetrometer, Journ. of Geotech. Eng'g Div., Vol. 102, No. GT5, May 1976.

Dayal, U., and Allen, J.H., The Effect of Penetration Rate on the Strength of Remolded Clay and Sand Samples, Canadian Geotech. Journal, Vol. 12, 1975, pp. 336-348.

ClibPDF - www.fastio.com

de Ruiter, J., Electric Penetrometer for Site Investigations, Journal SM and F Div., Proc. ASCE, SM2, February 1971, pp. 457-472.

Drnevich, V.P., Exploration Methods, Tech. Report, UKY 43-71-CE10, SM Series No. 9, U. of Kentucky, 1971.

Drnevich, V.P., Gorman, C.T., and Hopkins, T.C., Shear Strength of Cohesive Soils and Friction Sleeve Resistance, Research Report 394, Dept. of Transportation, Kentucky, 1974.

Durgunoglu, H.T., Static Penetration Resistance of Soils, Doctoral Thesis submitted to Univ. of Calif., Berkeley, 1972, 345 pages.

Gorman, C.T., Hopkins, T.C., and Drnevich, V.P., In-situ Shear Strength Parameters by Dutch Cone Penetration Tests, Research Report KYP-72-38, HPR-1(9), Part III., Kentucky Bureau of Hwys., 1973.

Schmertmann, J.H., Palacios, A., Some Energy Relationships in the SPT Demonstrating the Need to Standardize Energy Entering the Top of the Sample Rods, Department of Civil Engineering, University of Florida.

Mitchell, J.K., and Durgunoglu, H.T., In-situ Strength by Static Cone Penetration Test, Proc. VIII, Int'l Conf. on SM and FE, Moscow, USSR, 1973, pp. 279-286.

ClibPDF - www.fastio.com

Mohan, D., Agarwal, V.A., and Telia, D.S., Correlation of Cone Size in the Dynamic Cone Penetration Test with the Standard Penetration Test, Central Research Institute of India, Geotech. 20, No. 3, 1970.

Sanglerat, G., Static Penetrometers in the U.S.A. and Canada, Reference No. 28, Chapter 6, pp. 177-188.

Schmertmann, J.H., Static Cone Penetrometers for Soil Exploration, Civil Engineering, Mag., June 1967.

Sherwood, P.T., and Ryley, M.D., An Examination of Cone Penetrometer Methods for Determining the Liquid Limit of Soils, RRL Report LR233, Ministry of Transport, Berkshire, England, 1968.

Static Cone Penetrometer for Soil Exploration, Spec. Tech. Publication G-8, Law Engr. Test Co., 1974.

The Dutch Soil Testing Method, N.Y. Goudsche Machine fabriek-Holland.

Standard Penetrometer

Christian, John T., Swiger, William F., Statistics of Liquefaction and SPT Results, Journ. Geotech. Eng'g Div. Vol. 101, No. GT115, November 1975, pp. 1135-1150.

Gibbs, H.J., and Holtz, W.G., Research on Determining the Density of Sands by Spoon Penetration Testing, IV Int'l Conf. on SM and FE, London, 1957, Vol. I, pp. 35-39.

ClibPDF - www.fastio.com

Kishida, H., Characteristics of Liquefied Sands During Mino-owari, Tohnankai and Fukui Earthquakes, Soils and Foundations, Japanese Soc. of SM and FE, Vol. IX, No. 1, March 1969.

Ohsaki, Y., Effects of Sand Compaction on Liquefaction During the Tokachioki Earthquake, Soils and Foundations, Japanese Soc. of SM and FE, Vol. X, No. 2, June 1970.

Peck, R.B., Hanson, W.E., and Thornburn, T.H., Foundation Engineering, Wiley, New York, N.Y., 1964, p. 410.

Standard Method for Penetration Test and Split-Barrel Sampling of Soils, Soil and Rock Eng. Com. D-18, October 1967.

Self Boring Pressuremeters

Amar, S., Baguelin, F., Jezequel, J.F., and LeMehaute, A., In-situ Shear Resistance of Clays, Reference No. 15, pp. 22-45.

Baguelin, F., Jezequel, J.F., and LeMehaute, A., Self-boring Placement Method of Soil Characteristics Measurements, Proc. of Specialty Conf., New England College, ASCE, August 11-16, 1974, pp. 312-332.

Baguelin, F., Jezequel, J.F., and LeMehaute, A., Characteristics Measurement, Reference No. 30, pp. 312-332.

ClibPDF - www.fastio.com

Baguelin, F., and Jezequel, J.F., Further Insights on the Self-Boring Technique Developed in France, Reference No. 16, pp. 231-243.

Dixon, S.J., Pressure Meter Testing of Soft Bedrock, ASTM STP 477, 1970, pp. 126-136.

Gibson, R.E., and Anderson, W.F., In-situ Measurement of Soil Properties with the Pressuremeter, Civil Eng'g and Public Works Review, Vol. 56, No. 658, May 1961.

Hartman, J.P., and Schmertmann, J.H., FEM Study of Elastic Phase of Pressuremeter Test, Reference No. 15, pp. 190-207.

Higgins, C.M., Pressuremeter Correlation Study, Research Report No. 31, Louisiana Dept. of Hwys., October 1968.

Jezequel, J.F., and Mieussens, C., In-situ Measurement of Coefficients of Permeability and Consolidation in Fine Soils, Reference No. 15, pp. 208-224.

Laier, J.E., Schmertmann, J.H., and Schaub, J.H., Effect of Finite Pressuremeter Length in Dry Sand, Reference No. 15, pp. 241-259.

Roy, M., Juneau, R., La Rochelle, P. and Tavenas, F.A., In-situ Measurement of the Properties of Sensitive Clays by Pressuremeter Tests, Reference No. 15, pp. 350-372.

Schaeffer, J.D., and Jones, W.V., Soft Rock Exploration with Pressure Equipment, Civil Eng'g, ASCE, October 1968.

ClibPDF - www.fastio.com

Schmertmann, J.H., Interpretation and Use of the Pressuremeter Test for Settlement Predictions, Reference No. 16, p. 356.

Smith, Travis, Smith, R.E., and Sathre, D.W., Embankment Testing with the Menard Pressuremeter, Interim Report No. M&R 632509-2, Materials and Research Dept., Div. of Hwys., State of Calif., May 1968.

Tavenas, F.A., Interpretation and Use of the Pressuremeter Test for Settlement Predictions, Reference No. 16, pp. 352-355.

Windle, D., and Wroth, C.P., Electrical Resistivity Method for Determining Volume Changes that Occur During a Pressuremeter Test, Reference No. 15, pp. 497-516.

Winter, E., and Rodriquez, A., Evaluation of Preconsolidation and Friction Angle in Granular Soils Using the Pressuremeter, Reference No. 15, pp. 523-535.

Wroth, C.P., and Hughes, J.M.O., Development of a Special Instrument for the In-situ Measurement of Strength and Stiffness of Soils, Proc. of Specialty Conf., New England College, ASCE, August 1974, pp. 295-311.

Wroth, C.P., and Hughes, J.M.O., An Instrument for the In-situ Measurement of the Properties of Soft Clays, Proc. of VIII Int'l Conf. SM and FE, Moscow, USSR, Vol. 1, Part 2, pp. 487-494.

ClibPDF - www.fastio.com

APPENDIX 2

GEOLOGY AND BORING PROFILES

ClibPDF - www.fastio.com

ClibPDF - www.fastio.com

Geological Description of Site 1 (Downtown Sacramento)

Sacramento is located on the eastern side and near the southern end of the Sacramento Valley which is drained by the Sacramento River. The river flows in a southerly direction to a point south of the city. There, it begins a turn to the southwest and empties into San Francisco Bay. The Sacramento Valley is the northern part of the Great Valley geomorphic province of California. The Great Valley is an elongated asymmetrical structural trough in which very thick deposits of marine and continental sediments ranging in age from Jurassic (190 million years ago) to Recent have been deposited. The deepest part of the basin lies near the western margin of the valley west of the present axis. The valley deposits thin eastward and overlap the crystalline rocks of the Sierra Nevada basement complex.

The test site is south of the confluence of the American River and Sacramento River and is within a flood plain and natural levee zone bordering the Sacramento River. In the mid-1800's much of the Sacramento city area was filled to prevent flooding of the streets and buildings. In later years, levees along the flood-prone rivers were constructed by the Corps of Engineers to help alleviate this hazard.

Deposits of clay, silt, sand and gravel found in borings are the result of deposition by river water during the normal course of flooding, channel change, and subsidence in the past. Such continental deposits extend to depths of hundreds of feet and perhaps as much as 2800 feet in this area. Marine deposits underlie these freshwater deposits

ClibPDF - www.fastio.com

and are much thicker. These sedimentary materials become compact and assume the characteristics of sedimentary rock with increasing depth.

Geological Description of Site 2 (Mare Island)

Mare Island is actually a peninsula rather than an island. It is situated in an estuarian environment. The southerly-flowing Napa River and Sonoma Creek have built a delta out into San Pablo Bay to the north of Mare Island. This low marshy land, that contains several sloughs, connects Mare Island to the main land mass to the north. Mare Island Strait separates Mare Island from the main land mass containing Vallejo to the east. To the south and west lies San Pablo Bay that reaches inland to the northeast from the Golden Gate. The junction of San Pablo Bay, Mare Island Strait and Carquinez Strait is at the southern extremity of Mare Island. Carquinez Strait links San Pablo Bay with Suisun Bay which is located several miles to the east. The mixed water from the rivers of the Sacramento Valley and the northern part of the San Joaquin Valley reach the Pacific Ocean through San Pablo Bay.

Upper Cretaceous marine deposits of sandstone, mudstone, shale and conglomerate, found in the southern half of the area, are the oldest rocks exposed on Mare Island. Pleistocene nonmarine deposits of irregularly interstratified sand, silt, gravel, and clay are also exposed in the southern half. The remainder of the deposits are recent unconsolidated flood plain deposits of sand, silt and clay. There are also deposits of Bay mud containing unconsolidated silt and clay admixed with organic material. These deposits are primarily

ClibPDF - www.fastio.com

located in the northeast section of Mare Island next to Mare Island Strait. The test site is underlain by very soft recent silty clay to a depth of about 70 feet. Stiff Pleistocene silty clay extends to greater depth. There is some evidence to suggest that the inactive Franklin Fault branches and borders Mare Island on both the east and west sides. This fault trends southeasterly from this location.

Geological Description of Site 3 (Rio Vista)

Rio Vista lies near the center of the north-south structural trough west of and paralleling the existing Central Valley of California. Sedimentary deposits in this region are 5 to 6 miles thick.

The site is in the general area of the confluence of the south-flowing Sacramento River and the north-flowing San Joaquin River, and is just east of Suisun Bay through which the combined water flows on its way to the Pacific Ocean. Flood plains, islands subject to flooding, and sloughs are characteristic of this delta environment encompassing many square miles to the south and east of Rio Vista.

The Montezuma Hills rise to a maximum elevation of 268 feet westerly of Rio Vista on the north side of the Sacramento River. Material exposed in these hills is Pleistocene non-marine, slightly consolidated alluvium.

ClibPDF - www.fastio.com

BORING LEGEND

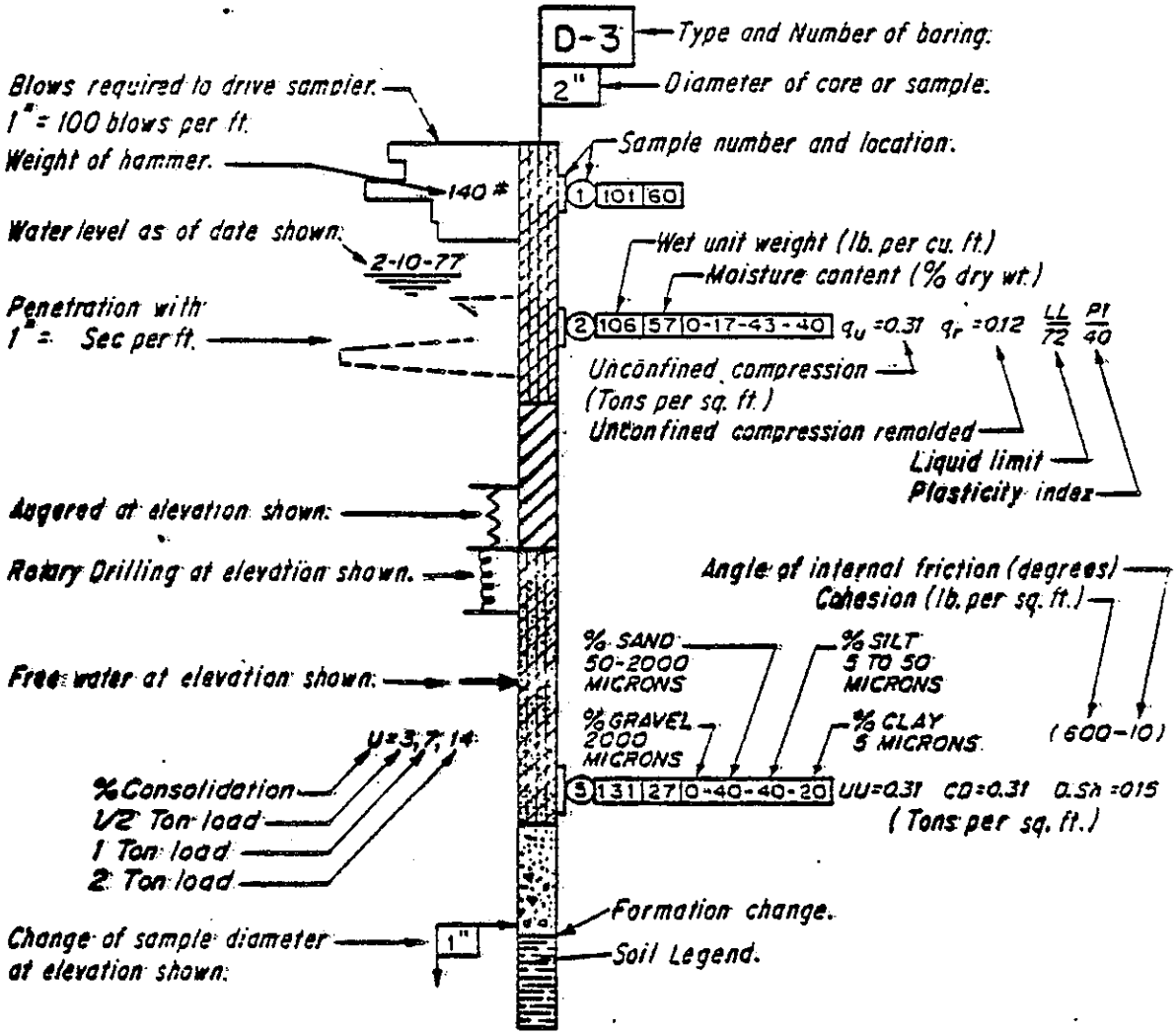

SOIL LEGEND

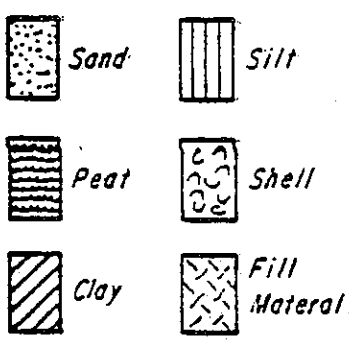

STRENGTH TESTS

q_r – Unconfined Compression remolded
q_u – Unconfined Compression
UU – Unconsolidated Undrained
CU – Consolidated Undrained
CD – Consolidated Drained
D.Sh. – Direct Shear

BORING PROFILES

ClibPDF - www.fastio.com

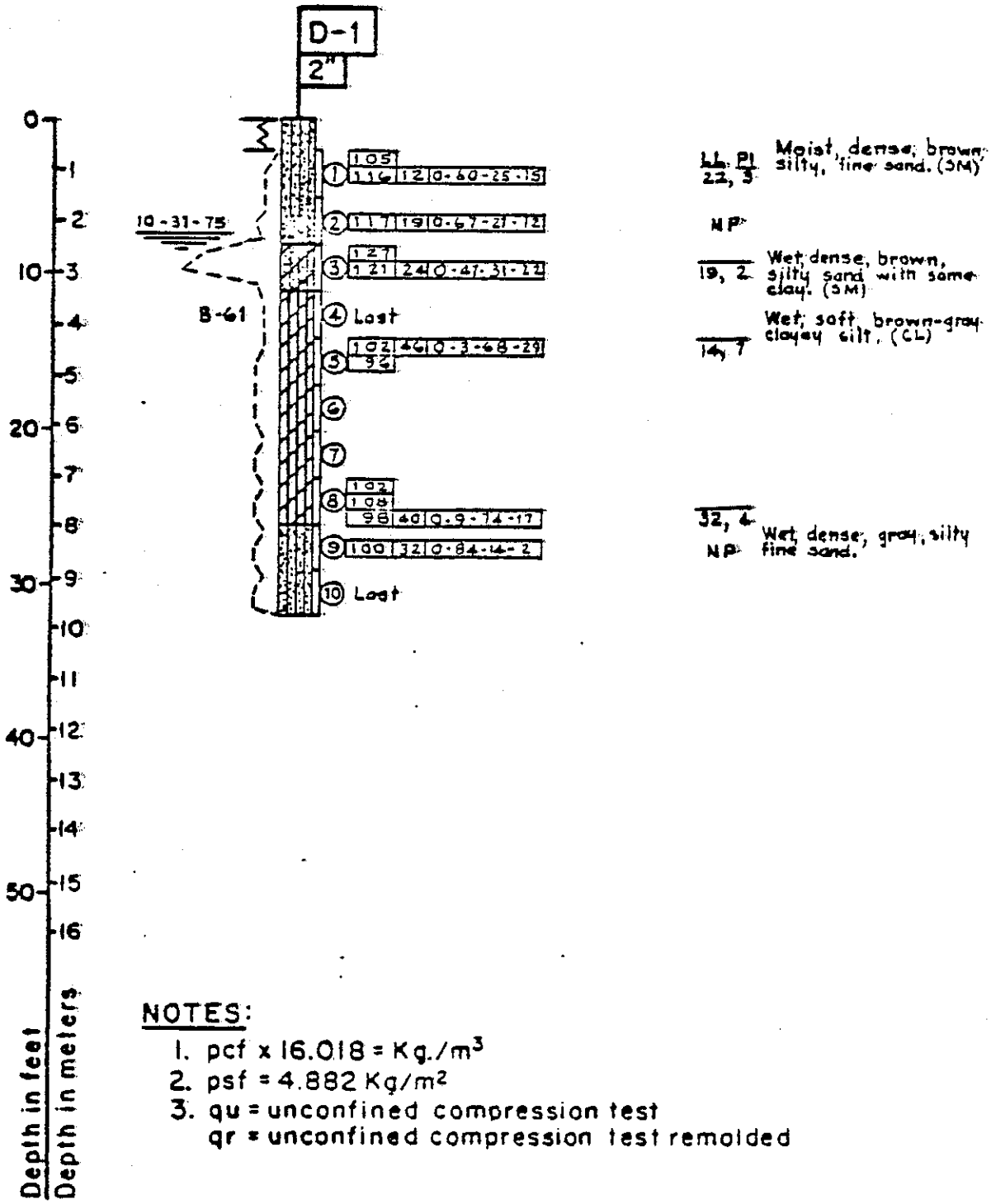

NOTES:

1. pcf x 16.018 = Kg./m^3
2. psf = 4.882 Kg/m^2
3. qu = unconfined compression test
   qr = unconfined compression test remolded

SITE 1

ClibPDF - www.fastio.com

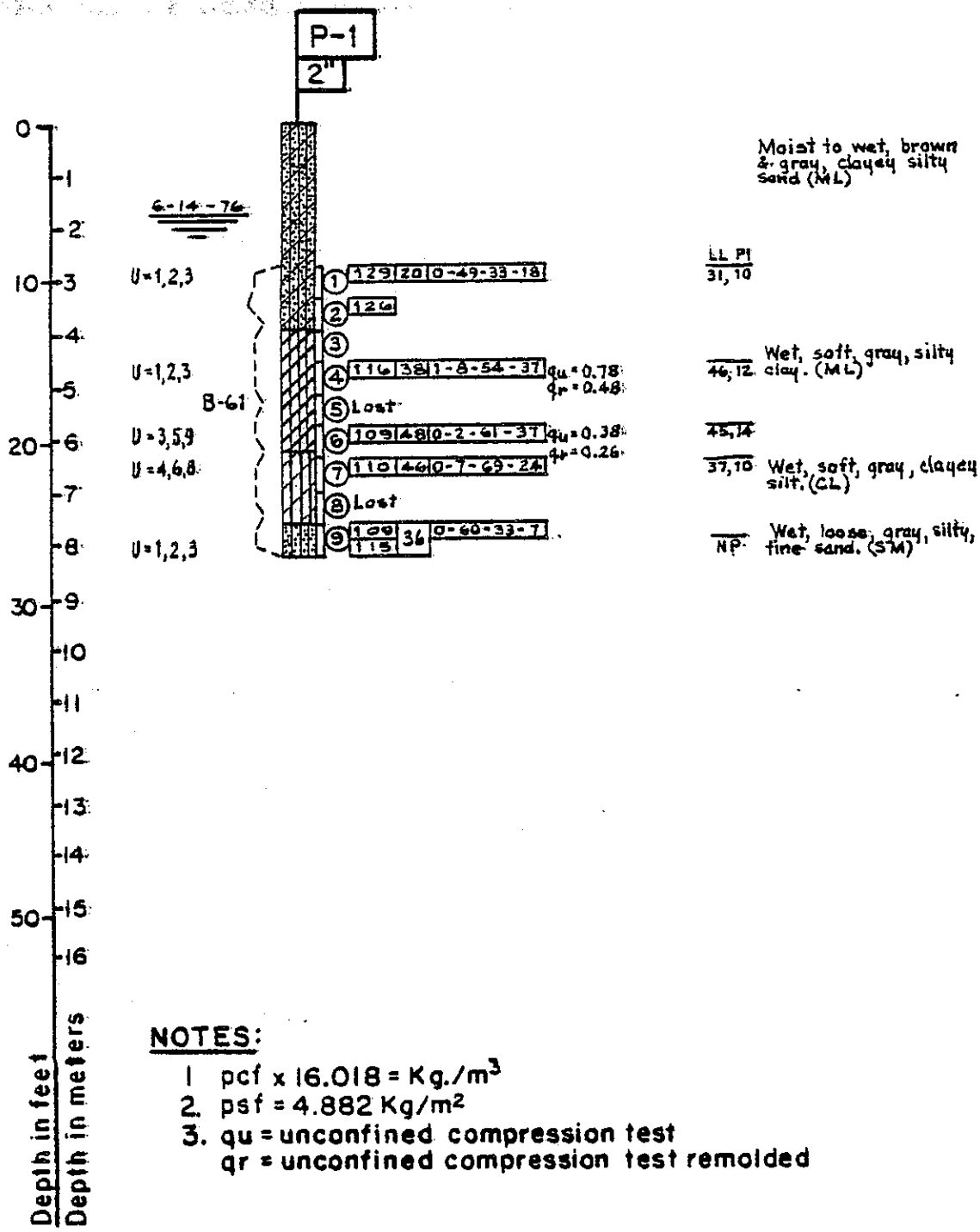

NOTES:

1. pcf x 16.018 = Kg./m^3
2. psf = 4.882 Kg/m^2
3. qu = unconfined compression test
   qr = unconfined compression test remolded

SITE 1

ClibPDF - www.fastio.com

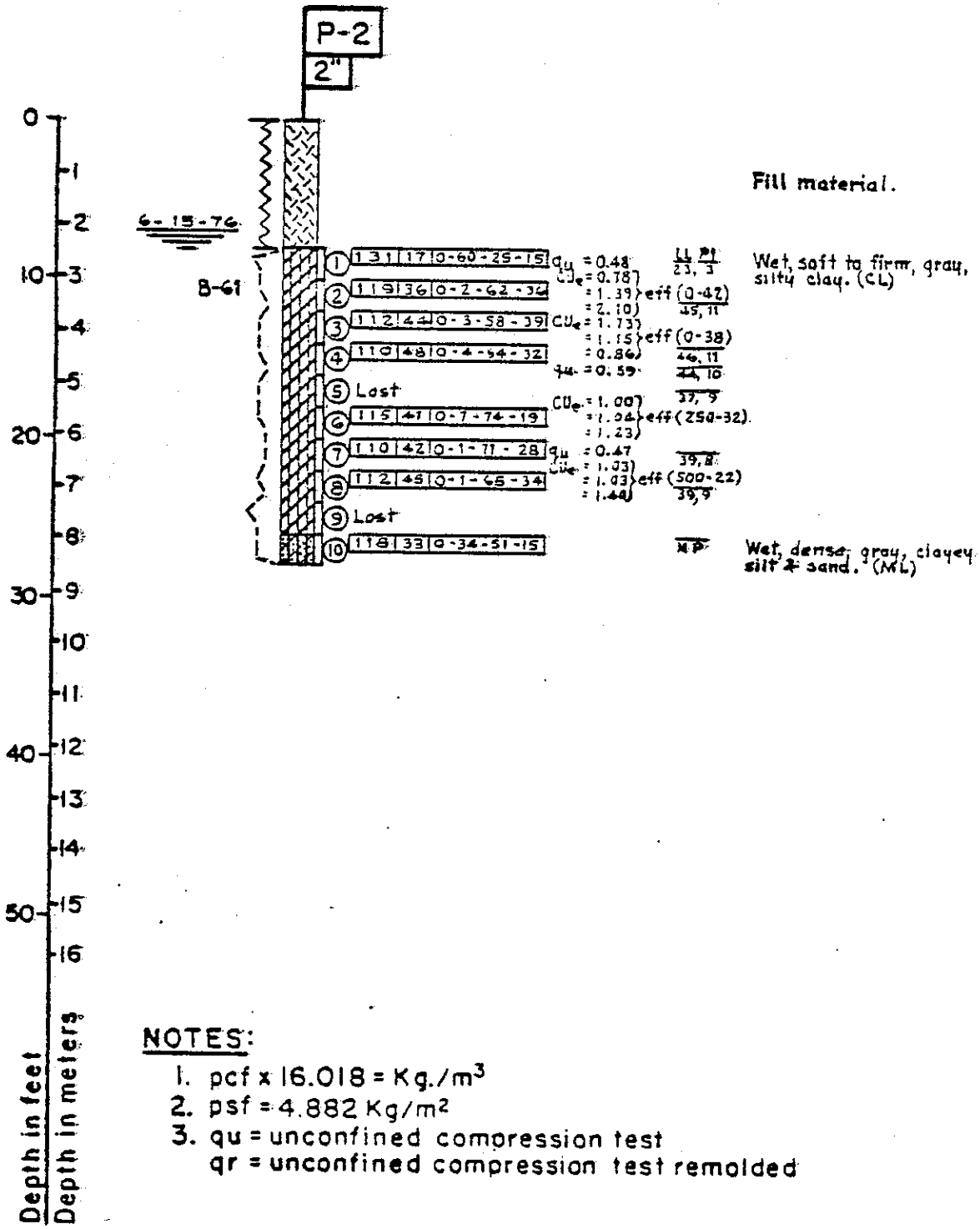

NOTES:

1. pcf x 16.018 = Kg./m³
2. psf = 4.882 Kg/m²
3. qu = unconfined compression test
   qr = unconfined compression test remolded

SITE 1

ClibPDF - www.fastio.com

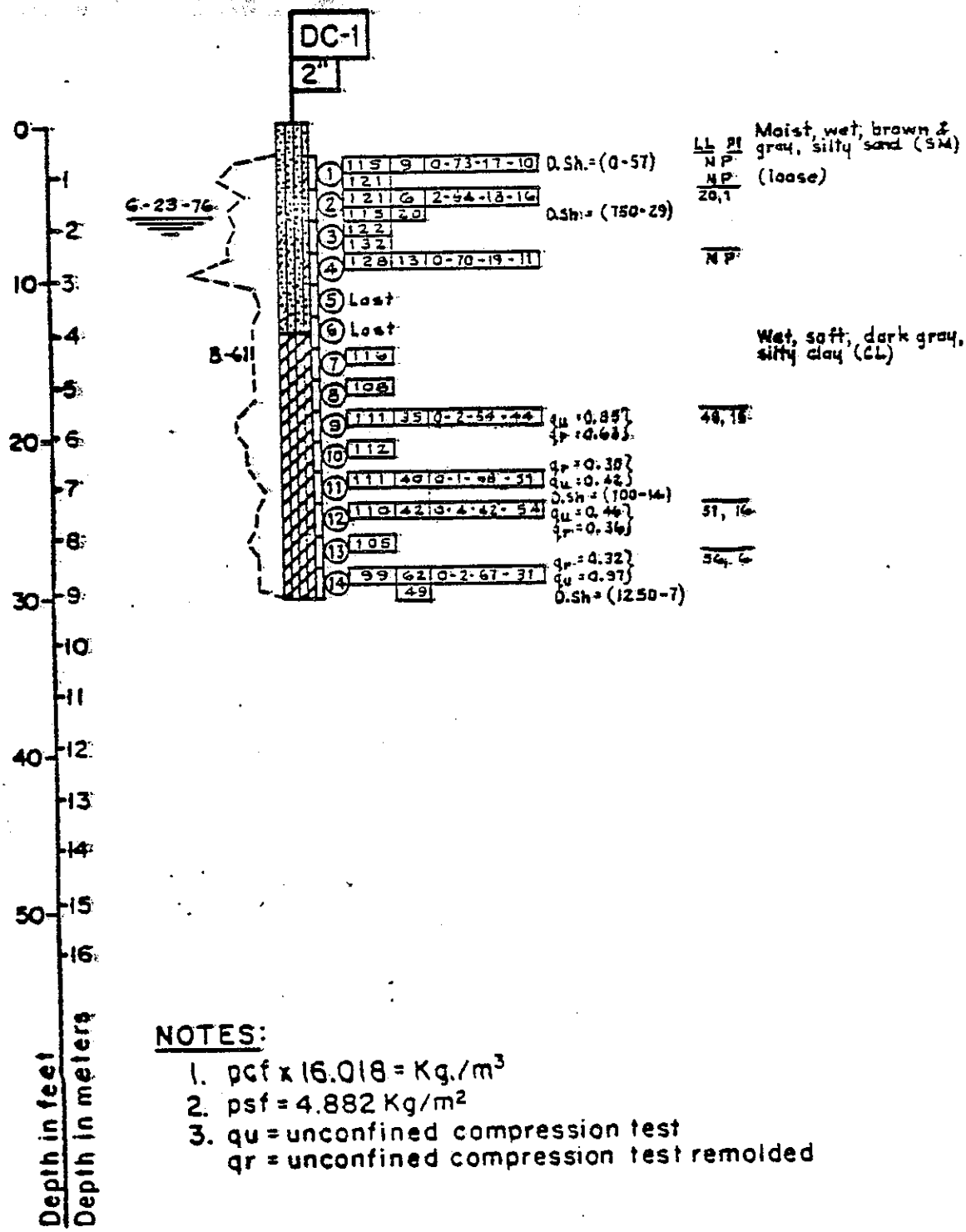

NOTES:

1. pcf x 16.018 = Kg./m³
2. psf = 4.882 Kg/m²
3. qu = unconfined compression test
   qr = unconfined compression test remolded

SITE 1

ClibPDF - www.fastio.com

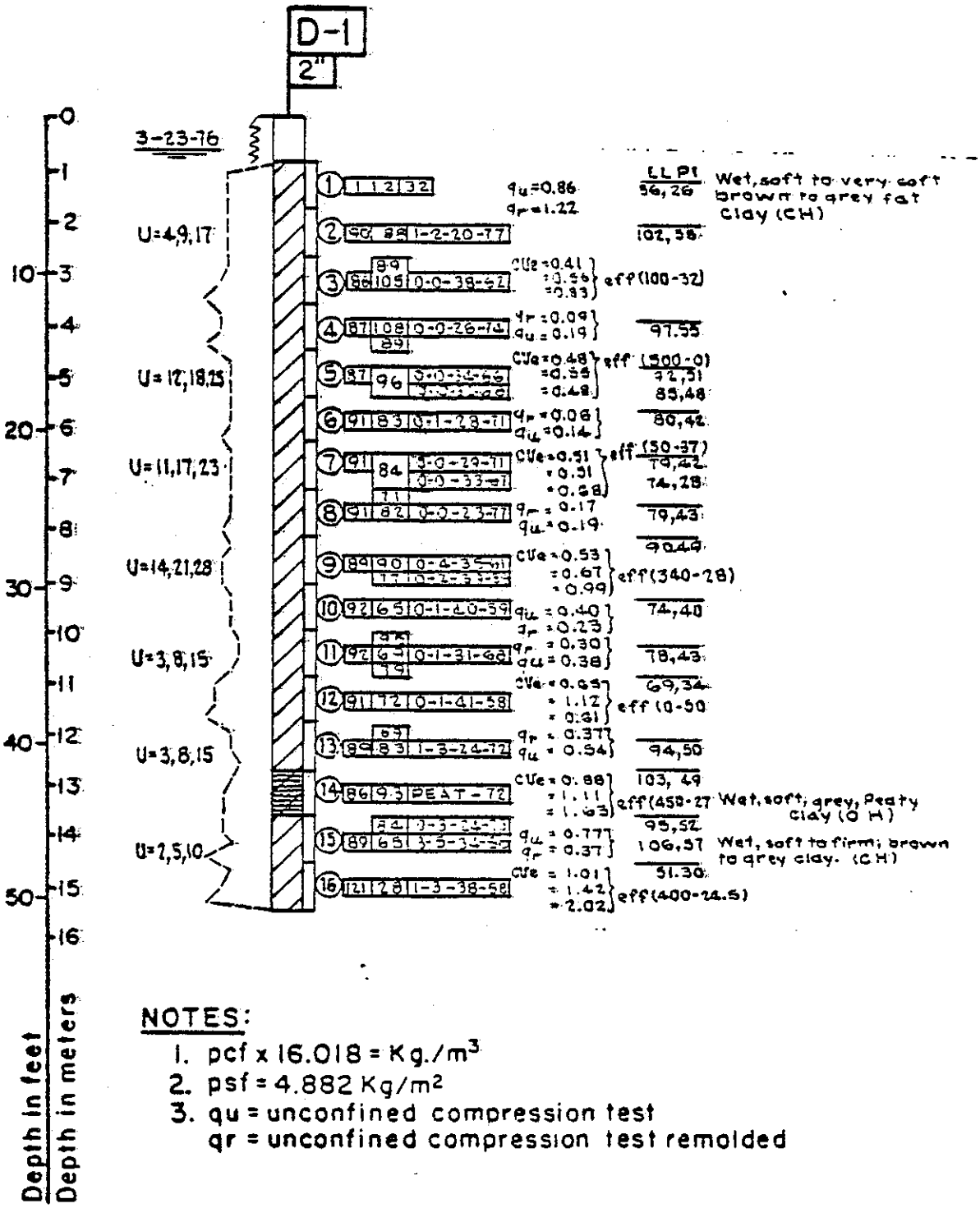

NOTES:

1. pcf x 16.018 = Kg./m^3
2. psf = 4.882 Kg/m^2
3. qu = unconfined compression test
   qr = unconfined compression test remolded

SITE 2

ClibPDF - www.fastio.com

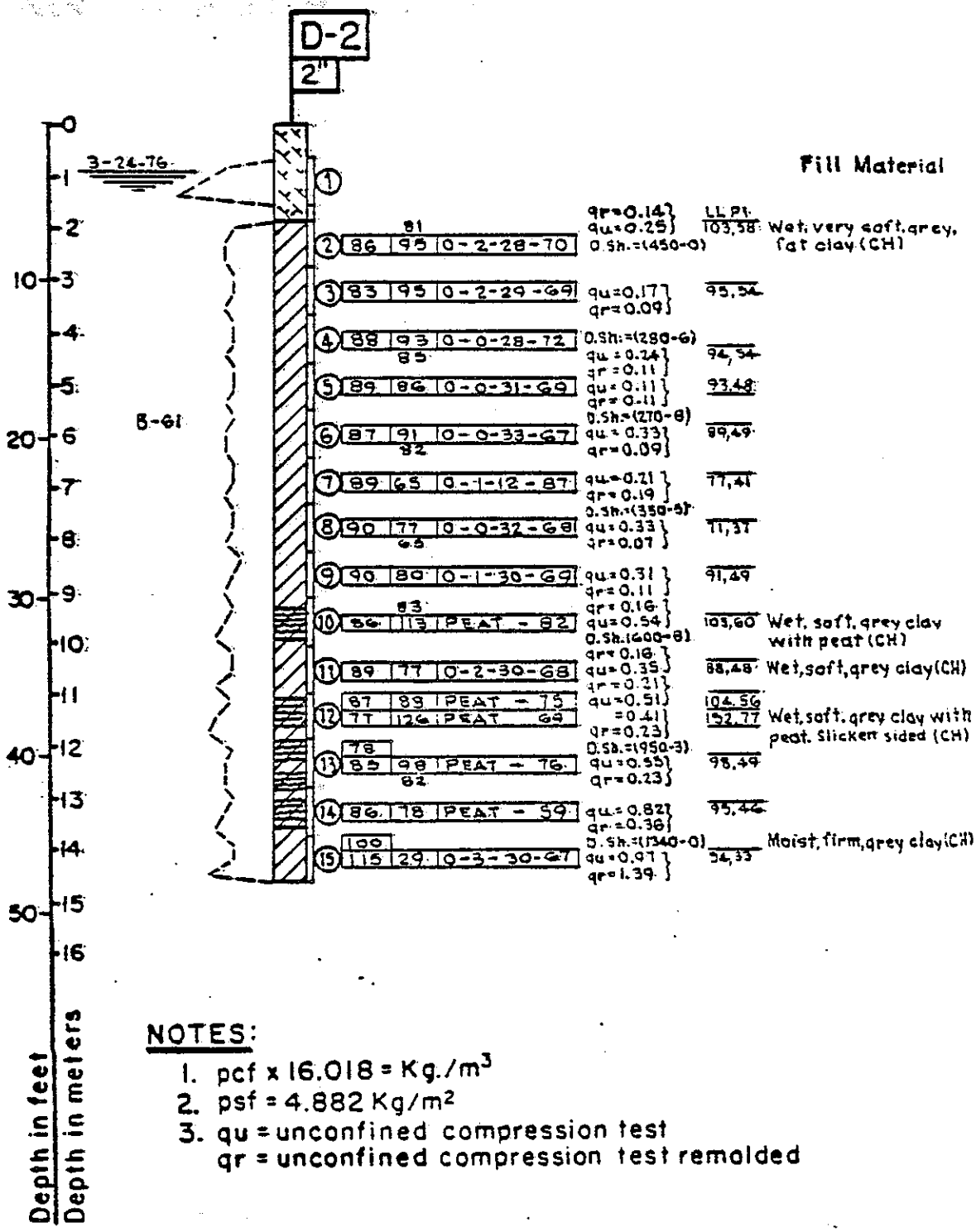

NOTES:

1. pcf x 16.018 = Kg./m^3
2. psf = 4.882 Kg/m^2
3. qu = unconfined compression test
   qr = unconfined compression test remolded

SITE 2

ClibPDF - www.fastio.com

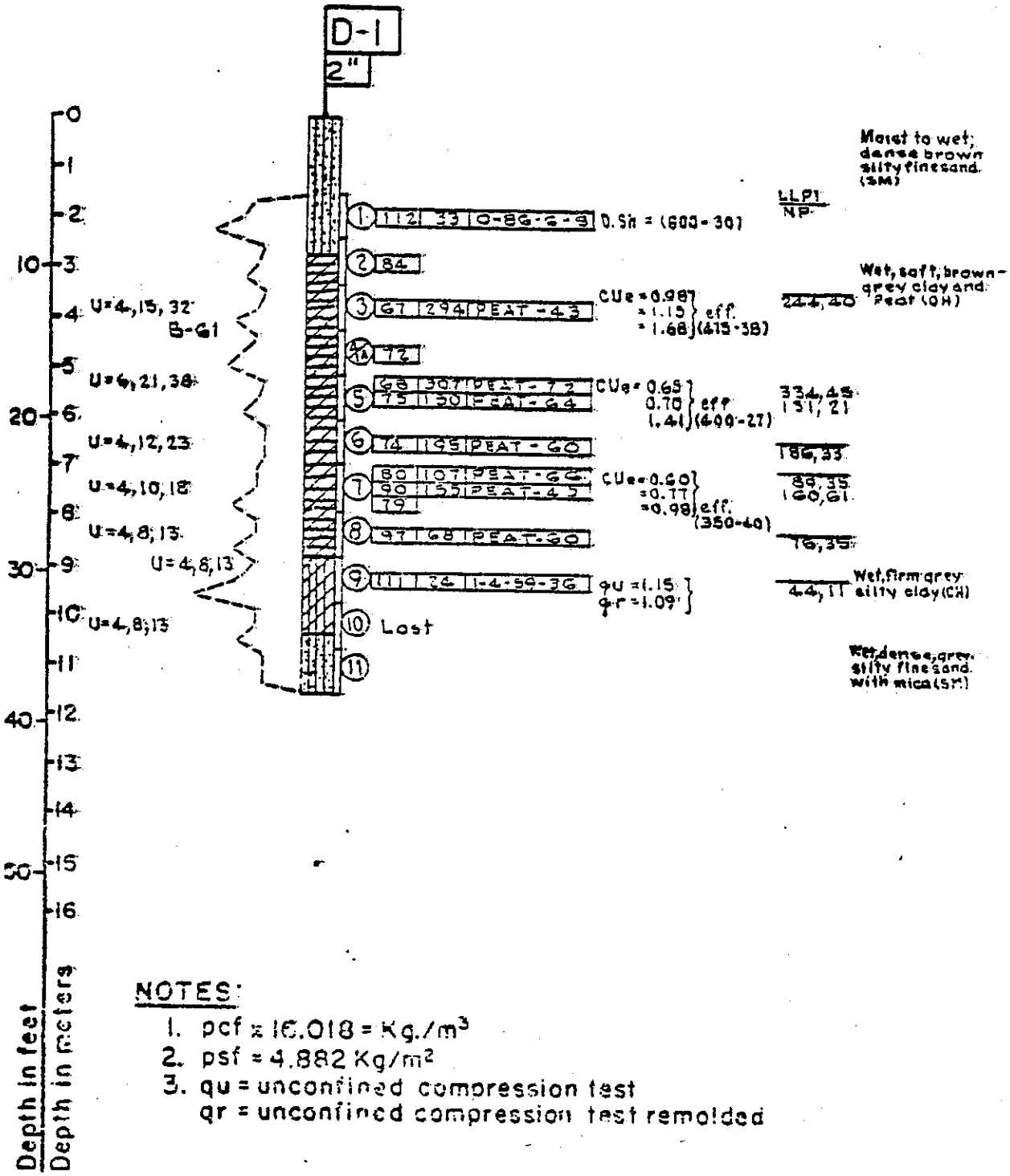

NOTES:

1. pcf ≈ 16.018 = Kg./m³
2. psf = 4.882 Kg/m²
3. qu = unconfined compression test
   qr = unconfined compression test remolded

SITE 3

ClibPDF - www.fastio.com

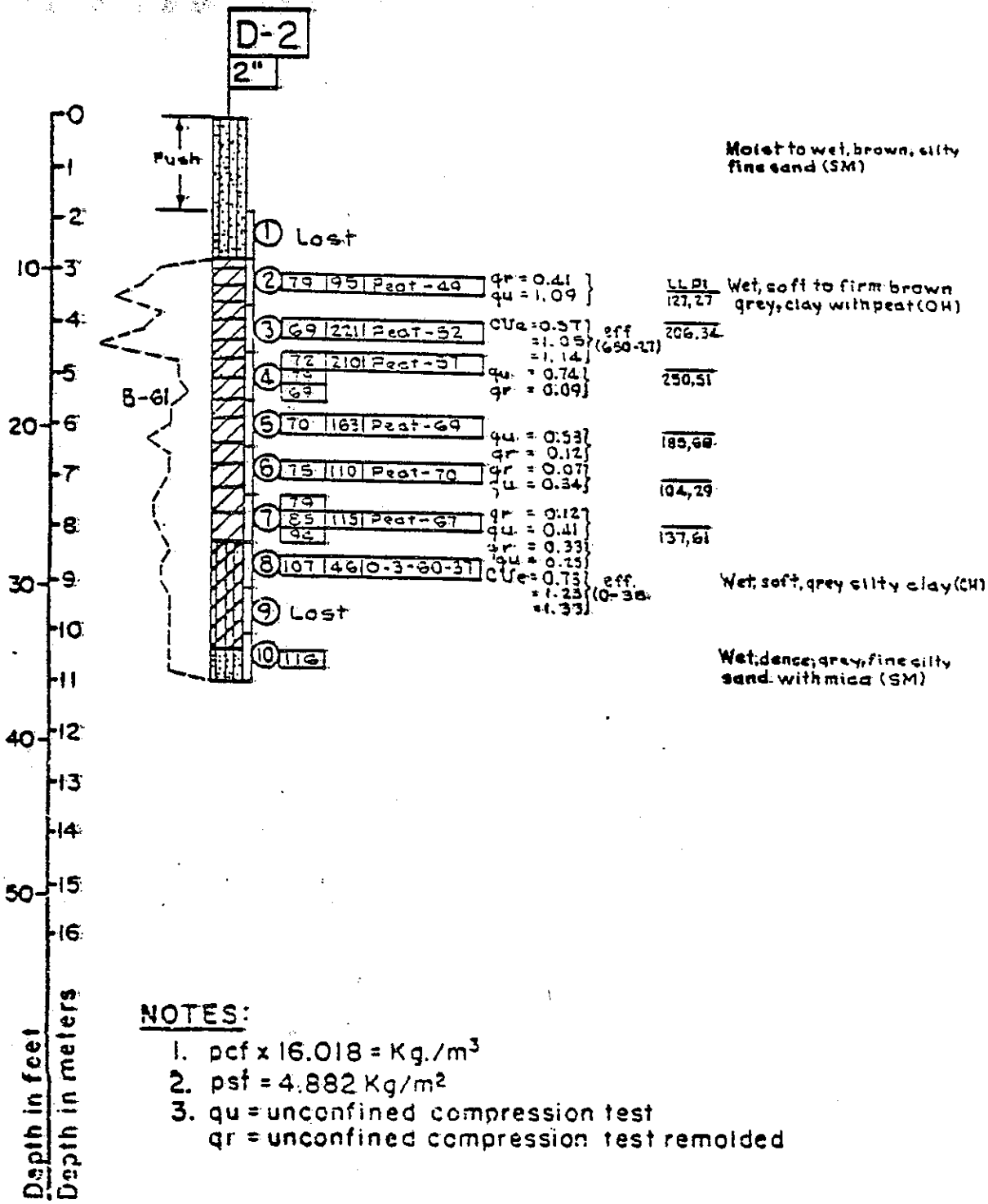

NOTES:

1. pcf x 16.018 = Kg./m³
2. psf = 4.882 Kg/m²
3. qu = unconfined compression test
   qr = unconfined compression test remolded

SITE 3

ClibPDF - www.fastio.com

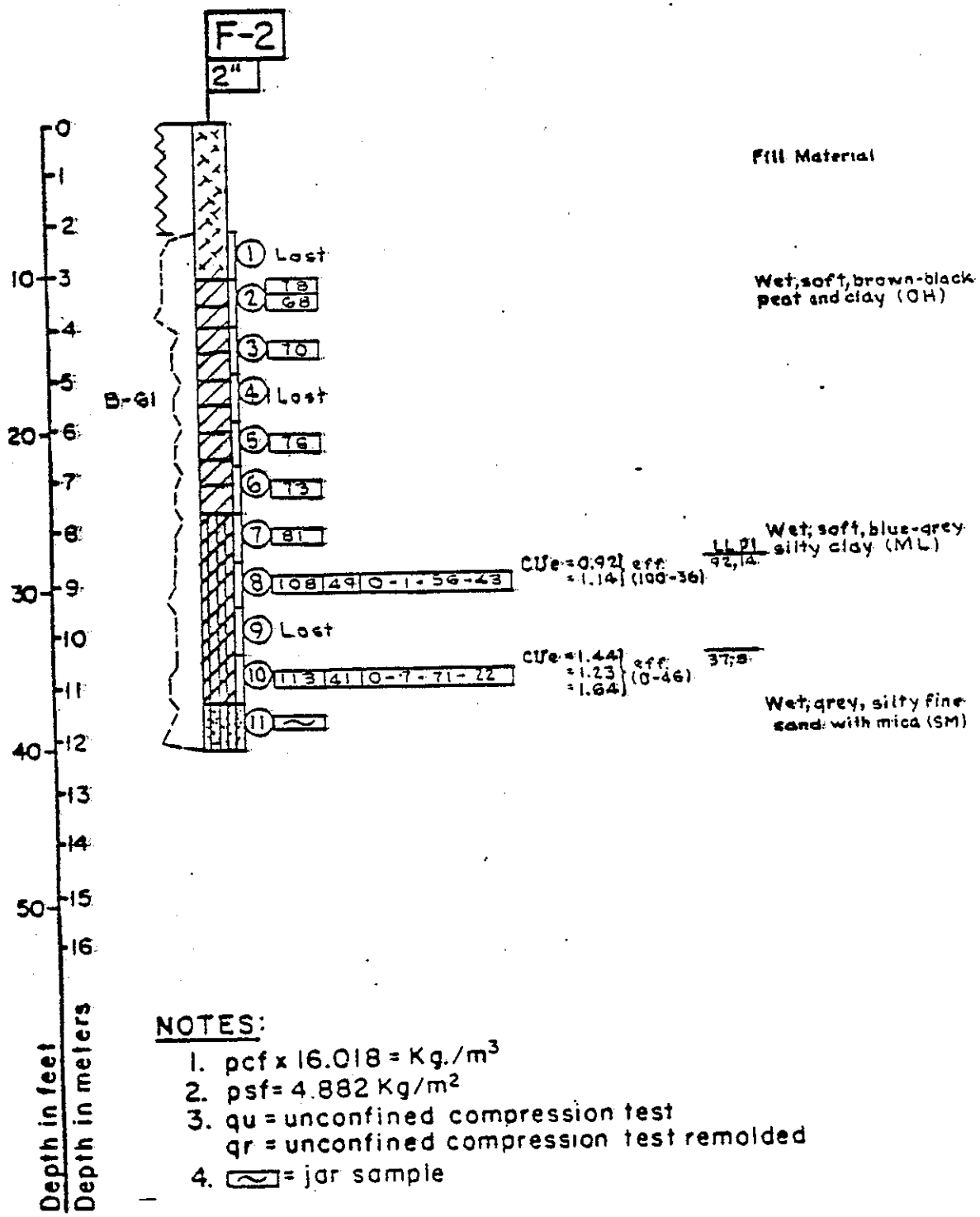

NOTES:

1. pcf x 16.018 = Kg./m^3
2. psf = 4.882 Kg/m^2
3. qu = unconfined compression test
   qr = unconfined compression test remolded
4. ~ = jar sample

SITE 3

ClibPDF - www.fastio.com

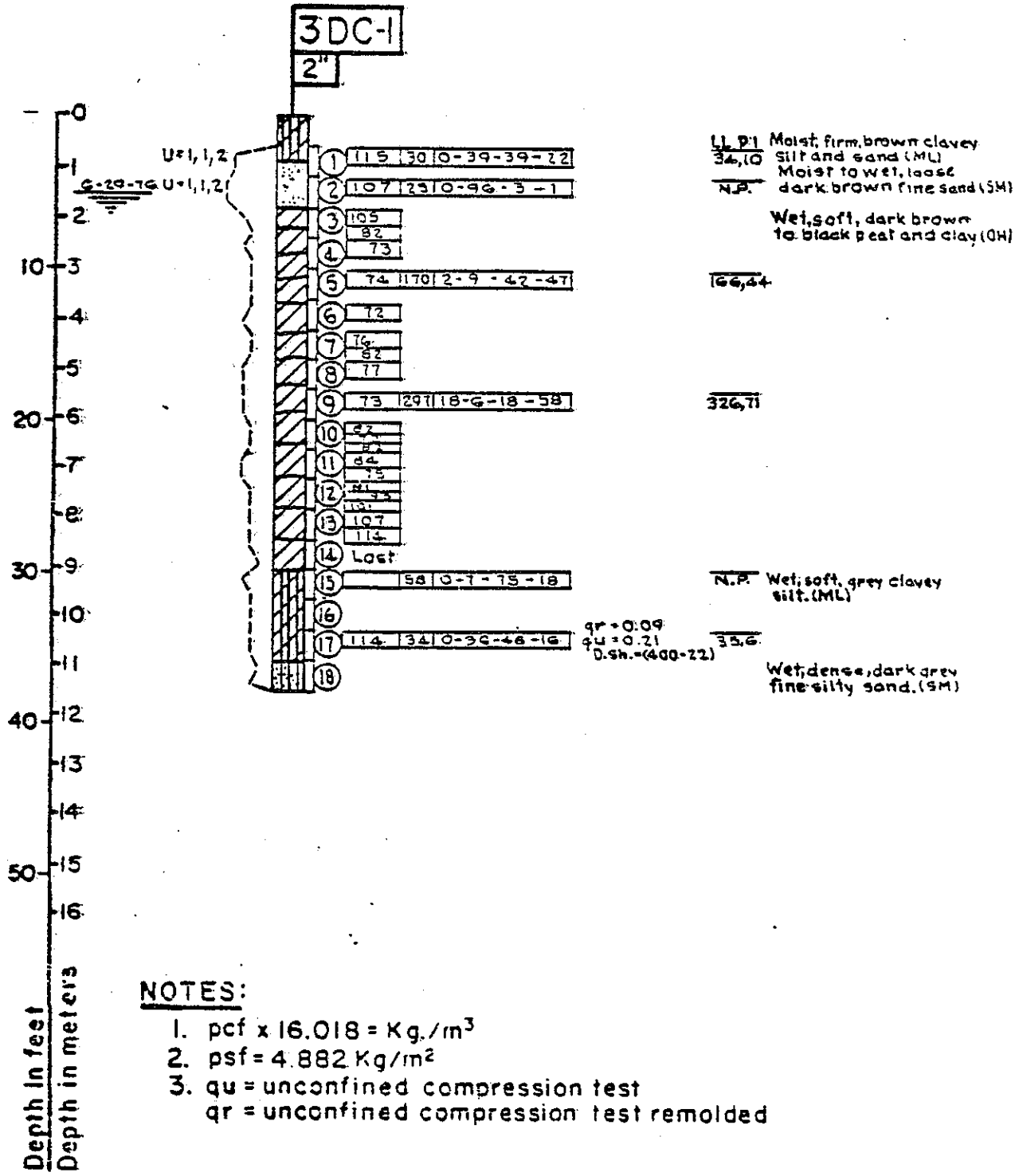

NOTES:

1. pcf x 16.018 = Kg./m^3
2. psf = 4.882 Kg/m^2
3. qu = unconfined compression test
   qr = unconfined compression test remolded

SITE 3

ClibPDF - www.fastio.com

APPENDIX 3

COST CONSIDERATIONS

ClibPDF - www.fastio.com

ClibPDF - www.fastio.com

Appendix 3 - Cost Considerations

The probes used in this research effort were acquired at different points in time. Hence, the following accepted rates of inflation have been assumed.

Year	Rate of Inflation %
1972	3.4
1973	8.8
1974	12.2
1975	7.0
1976	4.8
1977	6.8
1978	9.0
1979	13.5 (assumed)

The cost data provided below include cost of the probe, and accessories and expenses incurred in modification and adaptation of the probes for use with available departmental drill rigs.

Iowa Borehole Shear Device (11/79)

Probe and Accessories

Cost of Probe (7/75, $2,483.59) (This includes 50 ft pull rods and hand auger with 50 ft pipe)		$3,439.02

Modifications

Work Table (est.)	$300.00	
Pipe Vise (est.)	75.00	
Buzzer Circuit (est.)	150.00	
	$525.00	$ 525.00

ClibPDF - www.fastio.com

TOTAL		$3,964.00
	Say $4,000.00	

Vane Shear Device (11/79)

Probe and Accessories

Torque Head (est.)	$2,000.00	
24V Motor (3/73, $410)	742.00	
Vanes (est.)	450.00	
Casing (A-rod)	1,000.00	
Inner Rod (est.)	320.00	
	$2,512.00	$2,512.00

Modification

Swingout Adaptor (est.) (for concave)	$ 250.00	
Sliding Adaptor (est.) (Mobil B-61)	150.00	
	$ 400.00	$ 400.00
TOTAL		$4,912.00
	Say $5,000.00	

Dutch Cone Penetrometer

Probe and Accessories

Kentucky Conversion Kit (2/78, $7,140.91) (Includes 3 mantle cones, 50-1 meter sounding tubes, 50-1 meter inner rods, etc.)	$8,834.38

ClibPDF - www.fastio.com

Modifications

Mounting Bracket (est.)	$ 500.00	
Step Ladder	20.00	
	$ 520.00	$ 520.00
TOTAL		$9,354.38
	Say $9,400.00	

Standard Penetrometer

6 - Split Spoons (1/75, $476.40)	$1,110.35
5' - A rods, 20 (11/79)	1,000.00
	$2,110.35
TOTAL	$2,110.00

Cambridge Probe
(Prices as of 11-14-78)

Probe

Cambridge Mark VI self boring expansion pressuremeter in fitted wooden box	$5,692.00

Monitoring System

Electronics unit	$2,196.00
Digital multimeter	350.00
X-Y-Y-Plotter (Not quoted by CAMBRIDGE INSITU)	4,800.00
Pressure control panel for manual control of pressure	1,045.00
	$8,391.00

ClibPDF - www.fastio.com

Drilling Equipment

Cutter drive, unit, hydraulic standard pattern, with aluminum housing	$2,101.00
Hydraulic ground frame	$2,623.00

For a 100 feet deep hole

EX casing @ $100 per length of five feet (estimate only) (1.52 meters)	$2,000.00
Cutter drive rod, stainless steel @ $75 (estimate only) per length of five feet	$1,500.00
	$8,224.00

Auxiliary Equipment

Chinese lantern for use in sands and in stiff clays	$ 891.00
Adiprene membranes (10)	330.00
Set of spare parts for expansion pressuremeter used in soft clays	588.00
	$1,809.00

Summary, Cambridge Probe

Probe	$5,692.00	
Monitoring System	8,391.00	
Drilling Equipment	8,224.00	
Auxiliary Equipment	1,809.00	
Total Mobilization Cost	$24,116.00	$24,200

ClibPDF - www.fastio.com

Conditions of Sale (Partial List)

The prices quoted above (except where denoted) comprise the cost of equipment, insurance, and carriage by air to Washington, D.C.

The prices are for orders placed before 31st July 1978, and to be dispatched in December 1978.

NOTE:

1. The assumption in this estimate is that a ground frame is used. If a drilling rig is available the cost of ground frame of $2,343 can then be deducted from the total cost and the cost of modifying the drilling rig will depend on its type and is not expected to exceed $3000. If a constant strain rate test is to be conducted then a constant strain rate control unit needs to be purchased at a cost of $2,782.

2. In April 1980, the actual cost of the above mentioned equipment might differ due to fluctuations in the dollar value in recent months.

3. To update the cost of equipment, an inflation rate of about 20% may be appropriate for 1980.

ClibPDF - www.fastio.com

ClibPDF - www.fastio.com

REFERENCES

1. John, S.B.P., "In Situ Measurement of Soil Properties" Final Report FHWA/CA/TL-80-13, May 1980.

2. Brochures sent by the manufacturer with the Iowa Borehole Shear Device.

3. "Standard Method for Field Vane Shear Test in Cohesive Soil", ANSI/ASTM Designation 2573-12, pp. 337-340, Part 19, 1978, Annual Book of ASTM Standards.

4. Ladd, C.C., "Measurement of In Situ Shear Strength", Discussion, pp. 153-160, Volume II of Proceedings of the Conference on In Situ Measurement of Soil Properties, 1975, Raleigh, North Carolina.

5. Tentative Method for "Deep, Quasi-Static, Cone and Friction-Cone Penetration Tests of Soil", ASTM Designation D3461-75T, pp. 450-457, Part 19, 1978, Annual Book of ASTM Standards.

6. Brochures published by "Goudsche Machine fabriek B.V."

7. John, S.B.P., and Weber, R.B., "A Computer Program for Reducing and Plotting Dutch Cone Penetrometer Test Data", In-house Report, 1978, Transportation Laboratory, 5900 Folsom Blvd., Sacramento, CA 95819.

8. "Standard Method for Penetration Test and Split Barrel Sampling of Soils", ASTM Designation D-1586-67 (Reapproved 1974), pp. 235-240, Part 19, 1978, Annual Book of ASTM Standards.

ClibPDF - www.fastio.com

9. MacFarlane, J.G., "Test Method for Use of Cambridge Probe", Report No. CA/TL-80-30, June 1980, Transportation Laboratory, 5900 Folsom Blvd., Sacramento, CA 95819.

10. John, S.B.P., French Self Boring Pressuremeters (PAF 68 and PAF 72) Volume I - Evaluation Report No. FHWA TS-80-209, February 1980, U.S. DOT Offices of Research and Development, Implementation Division HDV-22, Washington, D.C. 20590.

11. John, S.B.P., French Self Boring Pressuremeters (PAF 68 and PAF 72) Volume II - Instructions for Field Tests, Report No. FHWA TS-80-209, February 1980, U.S. DOT, Offices of Research and Development, Implementation Division HDV-22, Washington, D.C. 20590.

Typed By Helen Gayther

ClibPDF - www.fastio.com

ClibPDF - www.fastio.com

Caltrans

CALIFORNIA DEPARTMENT OF TRANSPORTATION

TRANSPORTATION LABORATORY

FOUNDED IN 1912

ClibPDF - www.fastio.com