Technical Report Documentation Page

1. REPORT No.
FHWA/CA/ESC-98/06

2. GOVERNMENT ACCESSION No.

3. RECIPIENT'S CATALOG No.

4. TITLE AND SUBTITLE
Vehicle Crash Tests of the Type 70 Bridge Rail

5. REPORT DATE
January 1998

6. PERFORMING ORGANIZATION

7. AUTHOR(S)
John Jewell, Payam Rowhani, Robert Meline, Rich Peter

8. PERFORMING ORGANIZATION REPORT No.
680600

9. PERFORMING ORGANIZATION NAME AND ADDRESS
Material Engineering and Testing Services
California Department of Transportation
5900 Folsom Blvd., PO Box 19128
Sacramento, Ca. 95819

10. WORK UNIT No.

11. CONTRACT OR GRANT No.
F94TL48

12. SPONSORING AGENCY NAME AND ADDRESS
California Department of Transportation
Sacramento Ca. 95819

13. TYPE OF REPORT & PERIOD COVERED
Final

14. SPONSORING AGENCY CODE

15. SUPPLEMENTARY NOTES
This project was performed in cooperation with the US Department of Transportation, Federal Highway Administration, under the research project titled "Vehicle Crash Tests of the Type 70 Bridge Rail".

16. ABSTRACT
A bridge rail Type 70 was built and tested in accordance with NCHRP Report 350. The Type 70 bridge rail is an 810 mm tall concrete barrier with a sloping face of 9.1 degrees from the vertical. The barrier tested was 22.9 m long and was constructed at the Caltrans Dynamic Test Facility in West Sacramento, California.

A total of four crash tests were conducted under Report 350 test Level 4, one with an 820 kg car, two with 2000 kg pickup trucks and one with an 8000 kg van truck. Both the 820 kg and the kg tests were within the limits of the Report 350 guidelines. The first test of the 2000 kg pickup was unsuccessful due to a snagging problem with a floating hub on its extended rear axle. The problem with the first pickup led to a retest with a different pickup that did not have the extended floating rear hub. The second test was successful, with all results within the guidelines.

The Type 70 is recommended for approval on California highways requiring TL4 bridge rails.

17. KEYWORDS
Barriers, Crash Test, Bridge Rail, Concrete, Vehicle Impact Test, Single Slope, Type 70

18. No. OF PAGES:
85

19. DRI WEBSITE LINK
http://www.dot.ca.gov/hq/research/researchreports/1997-2001/bridge70_rail.pdf

20. FILE NAME
bridge70_rail.pdf

This page was created to provide searchable keywords and abstract text for older scanned research reports.
November 2005, Division of Research and Innovation

VEHICLE CRASH TESTS OF THE TYPE 70 BRIDGE RAIL

FINAL REPORT # FHWA/CA/ESC-98-06

CALTRANS STUDY # F94TL48

STATE OF CALIFORNIA

DEPARTMENT OF TRANSPORTATION
DIVISION OF NEW TECHNOLOGY,
MATERIALS AND RESEARCH

VEHICLE CRASH TESTS OF THE TYPE 70 BRIDGE RAIL

Supervised by.....Phil Stolarski, P.E.

Principal Investigator..... Rich Peter, P.E.

Report Prepared by.....Robert Meline, P.E. and John Jewell, P.E.

Research Performed by.....Roadside Safety Technology Unit

_____
Rich Peter, P.E.
Senior Materials and Research Engineer

_____
Phil Stolarski, Chief
Structural Materials Branch

_____
E. F. Poch, Chief
Material Engineering and Testing Services

TECHNICAL REPORT STANDARD TITLE PAGE

1. REPORT NO. FHWA/CA/ESC-98/06	2. GOVERNMENT ACCESSION NO.	3. RECIPIENT'S CATALOG NO.
4. TITLE AND SUBTITLE VEHICLE CRASH TESTS OF THE TYPE 70 BRIDGE RAIL		5. REPORT DATE JANUARY 1998 6. PERFORMING ORGANIZATION CODE
7. AUTHOR(S) John Jewell, Payam Rowhani, Robert Meline, Rich Peter		8. PERFORMING ORGANIZATION REPORT NO. 680600
9. PERFORMING ORGANIZATION NAME AND ADDRESS Material Engineering and Testing Services California Department of Transportation 5900 Folsom Blvd., PO Box 19128 Sacramento, Ca. 95819		10. WORK UNIT NO. 11. CONTRACT OR GRANT NO. F94TL48
12. SPONSORING AGENCY NAME AND ADDRESS California Department of Transportation Sacramento Ca. 95819		13. TYPE OF REPORT & PERIOD COVERED FINAL 14. SPONSORING AGENCY CODE

15. SUPPLEMENTARY NOTES

This project was performed in cooperation with the US Department of Transportation, Federal Highway Administration, under the research project titled “Vehicle Crash Tests of the Type 70 Bridge Rail ".

16. ABSTRACT

A bridge rail Type 70 was built and tested in accordance with NCHRP Report 350. The Type 70 bridge rail is an 810 mm tall concrete barrier with a sloping face of 9.1 degrees from the vertical. The barrier tested was 22.9 m long and was constructed at the Caltrans Dynamic Test Facility in West Sacramento, California.

A total of four crash tests were conducted under Report 350 test Level 4, one with an 820 kg car, two with 2000 kg pickup trucks and one with an 8000 kg van truck. Both the 820 kg and the 8000 kg tests were within the limits of the Report 350 guidelines. The first test of the 2000 kg pickup was unsuccessful due to a snagging problem with a floating hub on its extended rear axle . The problem with the first pickup led to a retest with a different pickup that did not have the extended floating rear hub. The second test was successful, with all results within the guidelines.

The Type 70 is recommended for approval on California highways requiring TL4 bridge rails.

17. KEY WORDS Barriers, Crash Test, Bridge Rail, Concrete, Vehicle Impact Test, Single Slope, Type 70		18. DISTRIBUTION STATEMENT No Restrictions. This document is available through the National Technical Information Service, Springfield, VA 22161	
19. SECURITY CLASSIF. (OF THIS REPORT) Unclassified	20. SECURITY CLASSIF. (OF THIS PAGE) Unclassified	21. NO. OF PAGES	22. PRICE

NOTICE

The contents of this report reflect the views of the Office of Materials Engineering and Testing Services, which is responsible for the facts and the accuracy of the data presented herein. The contents do not necessarily reflect the official views or policies of the State of California or the Federal Highway Administration. This report does not constitute a standard specification or regulation.

Neither the State of California nor the United States Government endorses products or manufacturers. Trade or manufacturers' names appear herein only because they are considered essential to the object of this document.

English to Metric System (SI) of Measurement

SI CONVERSION FACTORS

To Convert From	To	Multiply By
	ACCELERATION	
m/s^2	ft/s^2	3.281
	AREA	
m^2	ft^2	10.76
	ENERGY	
Joule (J)	ft.lbf	0.7376
	FORCE	
Newton (N)	lbf	0.2248
	LENGTH	
m	ft	3.281
m	in	39.37
cm	in	0.3937
	MASS	
kg	lb	2.205
	PRESSURE OR STRESS	
kPa	psi	0.1450
	VELOCITY	
km/h	mph	0.6214
m/s	ft/s	3.281
km/h	ft/s	0.9113

ACKNOWLEDGMENTS

This work was accomplished in cooperation with the United States Department of Transportation, Federal Highway Administration.

Special appreciation is due to the following staff members of The Office of Materials Engineering and Testing Services for their enthusiastic and competent help on this project:

Payam Rowhani, Robert Meline, Gary Gauthier, Anne Hernandez, Mike O'Keeffe, Mike White, and Larry Moore, test preparation, data reduction, vehicle preparation, and film processing; Bob Cullen, Eric Jacobson, Ed Ung and Walt Winter, electronic instrumentation; Gene Weyel and Bill Poroshin, machine shop services. Special thanks to Jason Dixon and Mike Arata, the student assistants who were instrumental in picking up the slack when needed.

Other persons from Caltrans who made important contributions include: Robert C. Anderson, Ralph Bishop, Engineering Services Center - Office of Structures, technical consultation; Ellis Hirst and Don Fogle, Traffic Operations, technical consultation; Don Tateishi, Headquarters Photo Section; Gary Pund (with help from Dave Bengal), Headquarters Motion Picture Unit.

TABLE OF CONTENTS

TECHNICAL REPORT STANDARD TITLE PAGE....i
DISCLAIMER....ii
METRIC CONVERSION TABLE....iii
ACKNOWLEDGMENTS....iv
TABLE OF CONTENTS....v
LIST OF FIGURES....vii
LIST OF TABLES....viii
1. INTRODUCTION....1
1.1. Problem....1
1.2. Objective....1
1.3. Background....1
1.4. Literature Search....2
1.5. Scope....3
2. TECHNICAL DISCUSSION....4
2.1. Test Conditions - Crash Tests....4
2.1.1. Test Facilities....4
2.1.2. Test Barriers....4
2.1.2.1. Design....4
2.1.3. Construction....6
2.1.4. Test Vehicles....8
2.1.5. Data Acquisition System....9
2.2. Test Results - Crash Tests....9
2.2.1.1. Impact Description - Test 511....10
2.2.1.2. Vehicle Damage - Test 511....16
2.2.1.3. Barrier Damage - Test 511....16
2.2.1.4. Dummy's Response - 511....16
2.2.1.5. Impact Description - Test 512....16
2.2.1.6. Vehicle Damage - Test 512....23
2.2.1.7. Barrier Damage - Test 512....23
2.2.1.8. Impact Description - Test 513....23
2.2.1.9. Vehicle Damage - Test 513....32
2.2.1.10. Barrier Damage - Test 513....32
2.2.1.11. Impact Description - Test 515....32
2.2.1.12. Vehicle Damage - Test 515....39
2.2.1.13. Barrier Damage - Test 515....39
2.3. Discussion of Test Results - Crash Tests....39

2.3.1. General - Evaluation Methods (Tests 511-513,515).....39
2.3.2. Structural Adequacy.....40
2.3.3. Occupant Risk.....40
2.3.4. Vehicle Trajectory.....40
3. CONCLUSION.....46
4. RECOMENDATION.....47
5. IMPLEMENTATION.....48
6. REFERENCES.....49
7. APPENDICIES.....50
7.1. Test Vehicle Equipment.....50
7.2. Test Vehicle Guidance System.....56
7.3. Photo - Instrumentation.....56
7.4. Electronic Instrumentation and Data.....60
7.5. Detailed Drawing.....74

LIST OF FIGURES

Figure 2.1 - Type 70 Bridge Rail....5
Figure 2.2 - Reinforcing Steel (From The Front)....6
Figure 2.3 - Reinforcing Steel (From Behind Barrier)....7
Figure 2.4 - Wood Forming And Finish Work....7
Figure 2.5 - Downstream View Of The Type 70 Barrier With Vehicle 511....11
Figure 2.6 - Side View Of The Type 70 Barrier At The Impact Location....11
Figure 2.7 - Front View Of Vehicle 511....12
Figure 2.8 - Side View Of Vehicle 511....12
Figure 2.9 - Right Front Of Vehicle 511 After Impact....13
Figure 2.10 - Right Rear Of Vehicle 511 After Impact....13
Figure 2.11 - Test 511 Impact Scuff Marks On The Type 70 Barrier....14
Figure 2.12 - Test 511 Downstream View Of The Type 70 Barrier....14
Figure 2.13 - Test 511 Data Summary Sheet....15
Figure 2.14 - Type 70 Barrier Prior To Test 512....18
Figure 2.15 - Vehicle 512 On Impact Side....18
Figure 2.16 - Barrier Profile and Vehicle for Test 512....19
Figure 2.17 - Vehicle 512 At Impact Location....19
Figure 2.18 - Side View Of Vehicle 512 During Impact....20
Figure 2.19 - Scuff Marks on Barrier for Test 512....20
Figure 2.20 - Final Position Of Test Vehicle 512....21
Figure 2.21 - The Back Side Of Tested Vehicle 512....21
Figure 2.22 - Test 512 Data Summary Sheet....22
Figure 2.23 - 513 Test Vehicle....25
Figure 2.24 - Vehicle 513 Relative To Type 70 Barrier....25
Figure 2.25 - Overall View Of Ballast In Test 513....26
Figure 2.26 - Two Pallets Of Sand Used For Ballast on Test 513....26
Figure 2.27 - 150 mm Angle Irons Were Used To Constrain The Pallets Of Sand for Test 513....27
Figure 2.28 - Keeper Plates Used With The 150 mm Angle Iron on Test 513....27
Figure 2.29 - Vehicle 513 During Impact....28
Figure 2.30 - Vehicle 513 During Impact....28
Figure 2.31 - Post Impact Location For Vehicle 513....29
Figure 2.32 - Right Side Of Cab For Test 513 After Test....30
Figure 2.33 - Front Of Vehicle 513 After Test....30
Figure 2.34 - Test 513 Data Summary Sheet....31

Figure 2.35 - Right Side Of Vehicle 515....33
Figure 2.36 - Impact Location For Test 515....33
Figure 2.37 - Vehicle 515 Bumper Location (Front Angle)....34
Figure 2.38 - Vehicle 515 Bumper Location (Back Angle)....34
Figure 2.39 - Vehicle 515 During Impact....35
Figure 2.40 - Vehicle 515 During Impact....35
Figure 2.41 - Scuff Marks On The Barrier for Test 515....36
Figure 2.42 - Front Right Side Of Vehicle 515 After Impact....36
Figure 2.43 - The Front Right Tire Of Vehicle 515 After Impact....37
Figure 2.44 - Test 515 Data Summary Sheet....38
Figure 7.1 - Camera Locations....57
Figure 7.2 - Tape Switch Layout....59
Figure 7.3 - Vehicle Accelerometer Sign Convention....61
Figure 7.4 - Test 511 Vehicle Accelerations -vs- Time....62
Figure 7.5 - Test 511 Vehicle Longitudinal Acceleration, Velocity and Distance -vs- Time....63
Figure 7.6 - Test 511 Vehicle Lateral Acceleration, Velocity and Distance -vs- Time....64
Figure 7.7 - Test 511 Vehicle Roll, Pitch and Yaw -vs- Time....65
Figure 7.8 - Test 511 Dummy Head Accelerations -vs- Time....66
Figure 7.9 - Test 512 Vehicle Accelerations -vs- Time....67
Figure 7.10 - Test 512 Vehicle Longitudinal Acceleration, Velocity and Distance -vs- Time....68
Figure 7.11 - Test 512 Vehicle Lateral Acceleration, Velocity and Distance -vs- Time....69
Figure 7.12 - Test 515 Vehicle Accelerations -vs- Time....70
Figure 7.13 - Test 515 Vehicle Longitudinal Acceleration, Velocity and Distance -vs- Time....71
Figure 7.14 - Test 515 Vehicle Lateral Acceleration, Velocity and Distance -vs- Time....72
Figure 7.15 - Test 515 Vehicle Roll, Pitch and Yaw -vs- Time....73

LIST OF TABLES

Table 1.1 - Comparison of Different Test Levels....2
Table 1.2 - Target Impact Conditions....3
Table 2.1 - Test Vehicle Masses....8
Table 2.2 - Test 511 Assessment Summary....41
Table 2.3 - Test 512 Assessment Summary....42
Table 2.4 - Test 513 Assessment Summary....43

Table 2.5 - Test 515 Assessment Summary....44
Table 2.6 - Vehicle Trajectories and Speeds....45
Table 7.1 - Test 511 Vehicle Dimensions....52
Table 7.2 - Test 512 Vehicle Dimensions....53
Table 7.3 - Test 513 Vehicle Dimensions....54
Table 7.4 - Test 515 Vehicle Dimensions....55
Table 7.5 - Typical Camera Type and Locations....57
Table 7.6 - Accelerometer Specifications....61

1. INTRODUCTION

1.1. Problem

Most new or retrofit bridge rails on California highways since the 1970's have been the standard Caltrans solid concrete parapet, 0.81 m high, with a New Jersey safety-shape profile. When it was determined that Caltrans would be transitioning from the New Jersey safety-shape profile to a single-slope 9.1° face for new concrete median barriers (see Type 60 median barrier below) Caltrans District offices requested a bridge rail to match. Additionally, requirements for a bridge rail are more stringent than those for a median barrier in that the bridge rail must be able to contain an 8000 kg medium duty cargo truck.

1.2. Objective

To crash test a 9.1°, 810 mm tall bridge railing (designated throughout this report as the *Type 70* to test level 4 in NCHRP Report 350[1]. These crash testing procedures include impacts ranging between 820 kg at 100 km/h to 8000 kg at 80 km/h.

1.3. Background

Several bridge barrier railings have been tested by Caltrans and other agencies in recent years. None of these designs nor the ten railings in the AASHTO Roadside Design Guide[2] meet our current requirements to match the Type 60 median barrier. Of the ten railings listed in the AASHTO Guide, four are concrete barriers of which none are single slope. Three out of the ten are mounted on reinforced concrete posts, or on concrete curbs and parapets. None of the designs have been tested to retain the 8000 kg truck. The Type 25 bridge rail, a New Jersey profile, is similar to the Type 70 in size and strength. However, the Type 25 has three separate angles on its face, while the Type 60 has only one. The Type 25 has not been tested with an 8000 kg truck, nor has it been tested to NCHRP Report 350[1] test levels.

California DOT has recently crash-tested the Type 60 median barrier[3]. The Type 60 tested was a 1420 mm tall median barrier with a 9.1° face. This testing was completed in early 1997 and concluded that the 9.1° face worked well on both the 820 kg light vehicle and the 2000 kg pickup truck.

The Type 70 railing was designed using the AASHTO Guide Specifications for Bridge Railings[4] requirements. The AASHTO Guide Specifications stipulate that bridge rail to be used for high-speed applications must conform to PL-2-level testing. However, according to the FHWA, the PL-2 test level has since been replaced by the similar NCHRP Report 350[1] test level 4, so the railing was tested according to test level 4 criteria. Table 1.1 summarizes the testing requirements for PL-1, PL-2 and Test Level 4. Notice that the pickup truck weight is different in AASHTO than in NCHRP Report 350. Nevertheless, the higher impact angle required in report 350 provides a higher severity impact because the kinetic energy due to the lateral component of the impact velocity is 33% higher. Test level 4 requires to testing with an 8,000 kg, two-axle truck in addition to the 820 kg sedan and the 2000 kg pickup.

Levels	Small Automobile	Pick-up truck	Single-Unit Truck
PL-1 (AASHTO)	816 kg (1800 lb) 80 km/h (50 mph) @ 20°	2449 kg (5400 lb) 72 km/h (45 mph) @ 20°	
PL-2 (AASHTO)	816 kg (1800 lb) 97 km/h (60 mph) @ 20°	2449 kg (5400 lb) 97 km/h (60 mph) @ 20°	8165 kg (18,000 lb) 80 km/h (50 mph) @ 15°
Test Level 4 (NCHRP 350)	820 kg 100 km/h @ 20°	2000 kg 100 km/h @ 25°	8000 kg 80 km/h @ 15°

Table 1.1 - Comparison of Different Test Levels

1.4. Literature Search

A literature search using the TRIS, NTIS, and the Compendex Plus databases was conducted to find research reports or publications related to the objectives of this project. There were no references found that involved the testing of single-slope bridge rails.

1.5. Scope

A total of four tests were performed and evaluated in accordance with NCHRP Report 350[1]. The testing matrix established for this project is shown in Table 1.2. Although test 512 was properly conducted, a failure in the test led to the conclusion that a free-floating rear hub on the pickup snagged the concrete bridge rail (see Section 2.2.1.5 for more detail). The failure prompted a retest designated as Test 515.

Test #	Barrier type	Mass (kgs)	Speed (km/h)	Angle (deg)
511	Type 70	820	100	20
512	Type 70	2000	100	25
513	Type 70	8000	80	15
515*	Type 70	2000	100	25
This is a retest of Test 512				

Table 1.2 - Target Impact Conditions

2. TECHNICAL DISCUSSION

2.1. Test Conditions - Crash Tests

2.1.1. Test Facilities

Each of the crash tests was conducted at the Caltrans Dynamic Test Facility in West Sacramento, California. The test area is a large, flat, asphalt concrete surface. There were no obstructions nearby except for a 2 m high earth berm 30 m downstream from the bridge rail. A temporary bridge deck was constructed for the purpose of this project.

2.1.2. Test Barriers

2.1.2.1. Design

The Type 70 bridge rail was designed to meet specific design criteria. The bridge rail had to be both crash-worthy according to the latest federal guidelines as well as functional and aesthetically pleasing. The secondary criterion for the design was the need to match the California Type 60 median barrier which has a 9.1 degree face.

The single-slope profile of the barrier was determined for two main reasons. One reason was based on the satisfactory results of the Type 60G median barrier validation tests in meeting the performance evaluation guidelines of NCHRP Report 350[1,3]. The other was the desire to have continuity along the roadside from a single slope median barrier to a similar single slope bridge rail. The functionality of a concrete rail was another desired feature.

The low maintenance of concrete is advantageous in regard to long-term costs and roadside worker exposure. In general, concrete barriers see less damage and require fewer repairs. There is also a decreased corrosion problem and fewer specially-fabricated, galvanized parts in a concrete barrier compared with a steel barrier. After the purpose of the barrier was resolved, the design criteria were applied.

The design criteria were based on highway safety design standards and material specifications. Section 13 from NCHRP Project 12-33 "Bridge Design Specification" [5] and the 1989 AASHTO "Guide Specification for Bridge Railings" [4] were used as guidelines for the design standard. These guidelines were followed for Performance Level Two (PL-2) crash test requirements. Material specifications for the steel reinforcement and concrete were provided by the July 1995 Caltrans Standard Specifications[6]. Once the design criteria were evaluated and the necessary changes were incorporated, a specific configuration was determined.

The design configuration for the Type 70 consists of a single-slope profile at 9.1 degrees and 810 mm high (See Figure 2.1). The reinforcing steel is covered with a minimum of 25 mm of concrete and all longitudinal reinforcing is terminated in 90 degree hooks. The 810 mm high design was used in our tests as the shortest configuration to be placed in service. This also provided a more conservative test configuration. Additional drawings for the type 70 barrier can be found in Appendix 7.5.

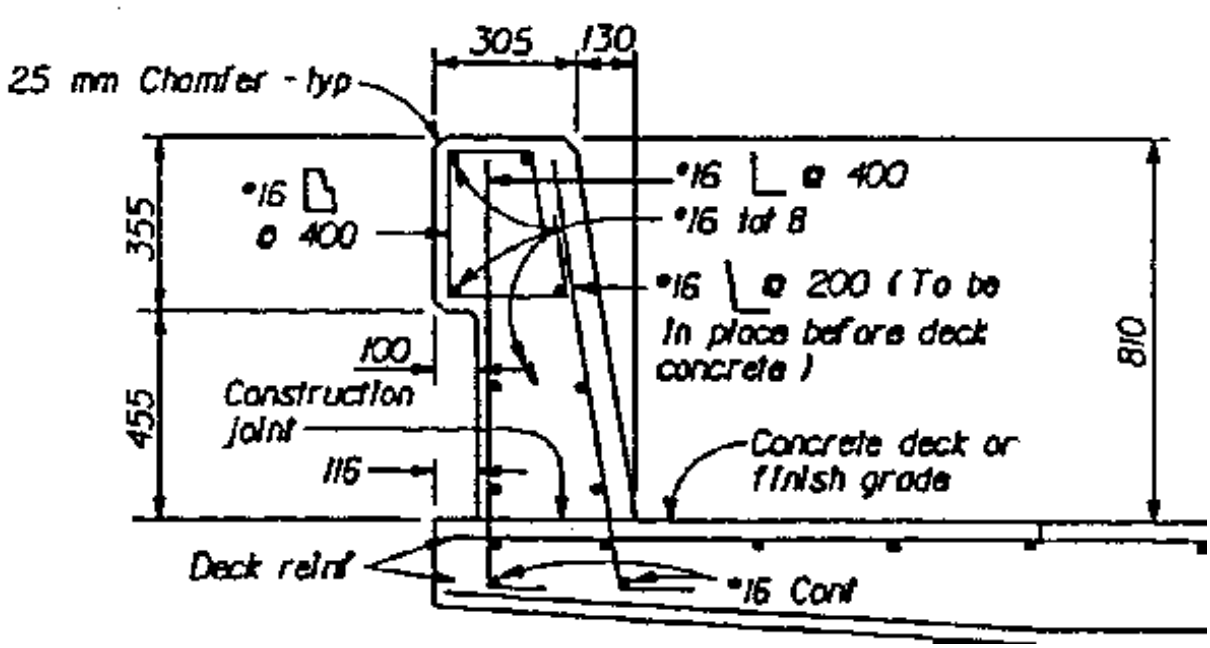

Figure 2.1 - Type 70 Bridge Rail

2.1.3. Construction

The Type 70 bridge rail was constructed at the north end of the Caltrans Dynamic Test Facility in West Sacramento, California. The north end of the facility was chosen in order to accommodate the trajectory and acceleration distance needed for the 8000 kg test vehicle. Over 600 m of test track was made available for test, with 550 m used to get the self-powered vehicle up to speed. An anchor block and a simulated bridge deck were built for the bridge rail installation.

The rail was constructed in three main stages. The concrete for the anchor block was poured with the reinforcing steel extending horizontally through the side. This reinforcing steel provided a construction joint between the anchor and the cantilevered deck. When the cantilevered deck was fabricated, vertical reinforcing steel extended upward. The additional steel was tied into place and the concrete was poured creating a cold joint at the deck surface. Wood forms were used in all pours and the concrete was vibrated in lifts.

Figure 2.2 - Reinforcing Steel (From The Front)

Figure 2.3 - Reinforcing Steel (From Behind Barrier)

Figure 2.4 - Wood Forming And Finish Work

2.1.4. Test Vehicles

The test vehicles complied with NCHRP Report 350[2]. For all tests, the vehicles were in good condition and free of major body damage and missing structural parts. All equipment on the vehicles was standard. The engines were front-mounted. The vehicle inertial masses were within acceptable limits (Table 2.1).

Table 2.1 - Test Vehicle Masses

Test No.	Vehicle	Ballast (kg)	Test Inertial (kg)
511	1992 Geo	0	843
512	1991 Ford F250	0	2018
513	1992 GMC Top Kick	2908	8010
515*	1991 Ford F250	0	2009

*Test 515 is a retest of test 512 which had a snagging problem due to an optional rear axle with a floating hub.

Except for the Geo, all the vehicles were self-powered; a speed control device limited acceleration once the impact speed had been reached. The Geo was connected by cable to another vehicle and towed to impact speed. Remote braking was possible at any time during the test for all vehicles. In tests 512 and 515 a bungie cord was attached to the vehicle's steering wheel in order to prevent oscillation in the steering system. A short distance before the point of impact, each vehicle was released from the guidance rail and the ignition was turned off (for the Geo, the tow cable was released). A detailed description of the test vehicle equipment and guidance systems is contained in Appendix 7.1 and 7.2.

2.1.5. Data Acquisition System

The impact phase of each crash test was recorded with several high-speed movie cameras, one normal-speed movie camera, one black and white sequence camera and one color slide sequence camera. The test vehicles and the barrier were photographed before and after impact with a normal-speed movie camera, a black and white 35 mm still camera and a color 35 mm camera. A film report of this project was assembled using edited portions of the movie coverage.

Three sets of orthogonal accelerometers were mounted in all vehicles (except the 8000 kg truck), two at the center of gravity and one at 600 mm behind the center of gravity. Additional accelerometers were placed in the vehicles for the purpose of obtaining supplemental data for finite element analysis (not included in this report). Rate gyro transducers were also placed at the center of gravity of each vehicle vehicles (except the 8000 kg truck) to measure the pitch, roll and yaw of the vehicles. The data were used in calculating the occupant impact velocities and ridedown accelerations, and maximum vehicle rotation.

An anthropomorphic dummy with three accelerometers mounted in its head cavity was placed in the driver's seat of the vehicle used in test 511 to obtain motion and acceleration data. The dummy, a Hybrid III built to conform to Federal Motor Vehicle Safety Standards by the Sierra Engineering Company, simulated a 50th percentile American male weighing 75 kg. The dummy was placed in the passenger’s seat and was restrained with lap and shoulder belts.

A digital transient data recorder (TDR), Pacific Instruments model 5600 was used to record electronic data in the tests. The digital data were analyzed using a laptop computer.

2.2. Test Results - Crash Tests

A film report with edited footage from tests 511, 512, 513, and 515 has been compiled and is available for viewing.

2.2.1.1.Impact Description - Test 511

The measured impact speed was 104.1 km/h with an angle of 20.0 degrees. Impact with the barrier occurred 11.5 m from the upstream end of the 23 m-long bridge rail. Contact with the bridge rail continued for 6.5 m before exiting. While the vehicle was in contact with the barrier, an aluminum tube (part of guidance system) struck the front left section of the hood, but did not noticeably affect the outcome of the test. The vehicle went relatively straight after leaving the bridge rail. The stopping point for the vehicle was approximately 60 m from the exit location.

During the initial impact with the bridge rail the vehicle's front wheels were abruptly forced to the left, but did not turn under the body. One or more of the vehicle's wheels maintained contact with the ground at all times.

The vehicle remained upright throughout and after the collision. The exit angle and speed of the car were 12.1 degrees and 92 km/h, respectively. The brakes were applied 0.81 seconds after impact.

Figure 2.5 - Downstream View Of The Type 70 Barrier With Vehicle 511

Figure 2.6 - Side View Of The Type 70 Barrier At The Impact Location

Figure 2.7 - Front View Of Vehicle 511

Figure 2.8 - Side View Of Vehicle 511

Figure 2.9 - Right Front Of Vehicle 511 After Impact

Figure 2.10 - Right Rear Of Vehicle 511 After Impact

Figure 2.11 - Test 511 Impact Scuff Marks On The Type 70 Barrier

Figure 2.12 - Test 511 Downstream View Of The Type 70 Barrier

Figure 2.13 - Test 511 Data Summary Sheet

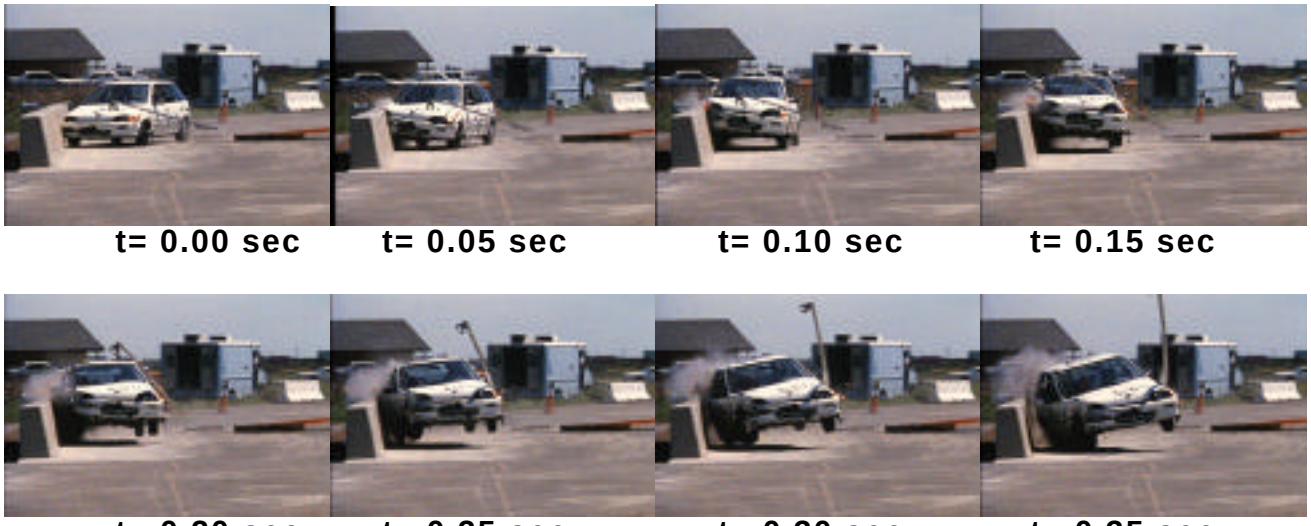

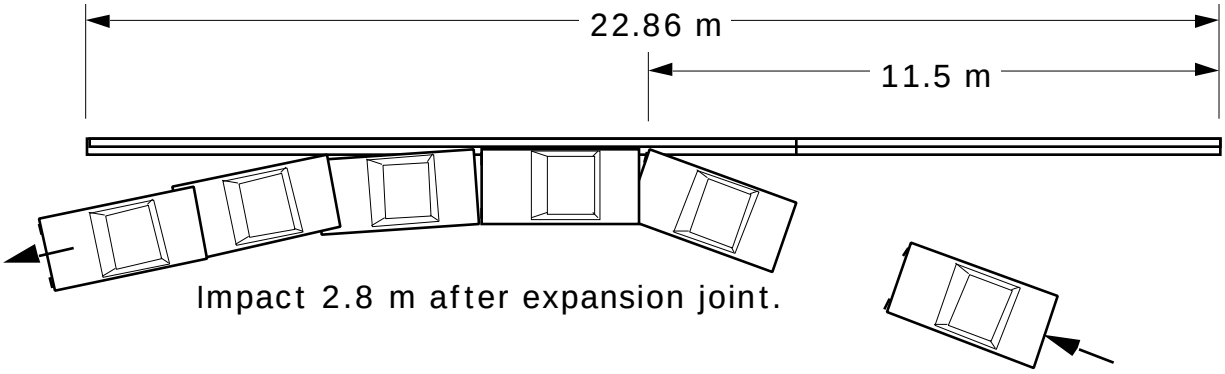

Test Barrier
- Type: Type 70 Bridge Rail
- Length: 22.9 m

Test Date: May 6, 1997

Test Vehicle:
- Model: 1992 Geo Metro
- Inertial Mass: 843 kg
- Impact / Exit Velocity: 104.1 km/h / 92 km/h
- Impact / Exit Angle: 20.0 / 12.1°

Test Dummy:
- Type: Hybrid III
- Weight / Restraint: 74.8 kg / lap and shoulder
- Position: Front Right

Test Data:
- Occ. Impact Velocity (Long / Lat): 4.51 m/s / 7.22 m/s
- Ridedown Acceleration (Long / Lat): -2.9g / -16.0g
- Max. 50 ms Avg. Accel (Long / Lat): -7.0g / -13.4g
- Exterior: VDS[7]/CDC[8] FR-5, RD-4 / 12RFEW3
- Interior: OCDI[1] RF0000110

Barrier Damage: Only superficial scuffing

2.2.1.2. Vehicle Damage - Test 511

The right front section of the vehicle sustained crushing of the bumper and frame, damage to the suspension and a flat tire. The hood crumpled, but did not penetrate the cab.

As the vehicle turned parallel to the barrier, the sheet metal on the entire right side came into contact with the barrier face. The rear right tire rubbed along the barrier, but was not damaged beyond moderate scuffing.

2.2.1.3. Barrier Damage - Test 511

Barrier damage was cosmetic only, consisting of scrapes and tire marks. Both of the right side tires left marks along the face of the barrier for the 6.5 meters of contact. Small amounts of concrete spalled from the face of the barrier where the vehicle's sheet metal made contact.

2.2.1.4. Dummy's Response - 511

The dummy was lap and shoulder belted. At impact, the dummy's head moved out of the passenger's side window about 100 mm. There was no contact between the dummy and the barrier face. The dummy remained upright and secure during the remainder of the test. The final resting position of dummy was upright in the passenger's seat.

2.2.1.5. Impact Description - Test 512

The vehicle impact speed and angle were 97 km/h and 25.1 degrees, respectively. Upon impact, the vehicle's front right fender moved down by approximately 200 mm. As the vehicle came parallel to the barrier, the rear left started to rise. While in contact with the barrier, the pickup rolled slightly to the right and pitched downward with the back left tire coming off of the ground by slightly more than a meter. The right rear hub of the vehicle dug into the barrier and the right end of the rear axle shifted backward relative to the vehicle frame. The exit speed and angle were 65 km/h and 5 degrees, respectively. By the time all four wheels were back on the ground the vehicle had begun to yaw slightly to the left. After 6 meters, the vehicle

appeared to be stabilized. However, at 0.6 seconds (10 meters) after impact, the vehicle began to turn left and roll to the right. Between 19 and 30 meters, the vehicle went from 40 degrees to 90 degrees and continued to roll a total of 4 1/2 times.

Though film footage of the impact was obscured due to dirt breaking loose from the undercarriage of the vehicle, there is evidence to support the hypothesis that the drive shaft pulled out of the transmission housing when the rear axle shifted backward, struck the ground and caused the vehicle to start rolling. A gouge in the pavement matching the size of the leading end of the drive shaft was found in the same location of the vehicle's initial roll.

Figure 2.14 - Type 70 Barrier Prior To Test 512

Figure 2.15 - Vehicle 512 On Impact Side

Figure 2.16 - Barrier Profile and Vehicle for Test 512

Figure 2.17 - Vehicle 512 At Impact Location

Figure 2.18 - Side View Of Vehicle 512 During Impact

Figure 2.19 - Scuff Marks on Barrier for Test 512

Figure 2.20 - Final Position Of Test Vehicle 512

Figure 2.21 - The Back Side Of Tested Vehicle 512

Figure 2.22 - Test 512 Data Summary Sheet

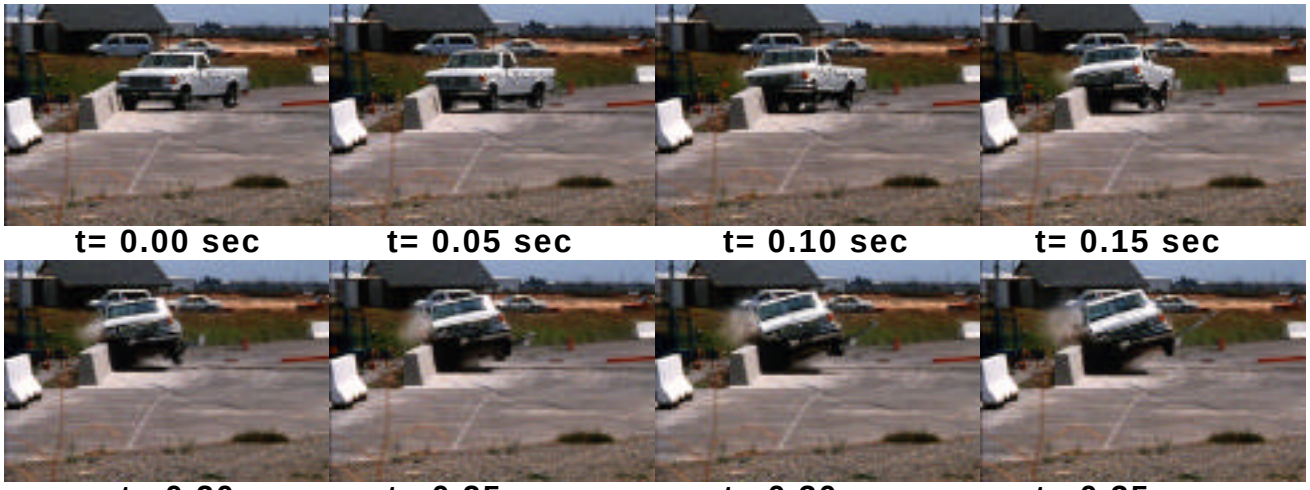

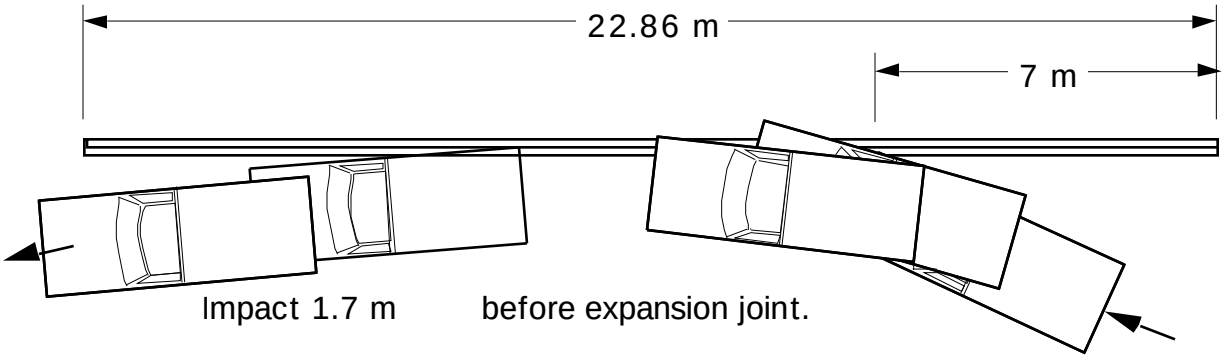

Test Barrier

Type:	Type 70 Bridge Rail
Length:	22.9 m
Test Date:	June 11, 1997
Test Vehicle:	
Model:	1991 Ford F250
Inertial Mass:	2018 kg
Impact / Exit Velocity:	97.0 km/h / 65 km/h
Impact / Exit Angle:	25.1° / 5°
Test Dummy:	
Type:	NA
Weight / Restraint:	NA
Position:	NA
Test Data:	
Occ. Impact Velocity (Long / Lat):	6.07 m/s / 8.2 m/s
Ridedown Acceleration (Long / Lat):	-6.9g / -6.7g
Max. 50 ms Avg. Accel (Long / Lat):	-7.1g / -14.6g
Exterior: VDS[7]/CDC[8]	FR-5, RD-5/ 01RFEW3
Interior: OCD[1]	RF0150013
Barrier Damage:	The barrier sustained a 200 mm long gouge just upstream from the impact area. The gouge was 20 to 100 mm wide and 0 to 20 mm deep.

2.2.1.6. Vehicle Damage - Test 512

There were two types of damage to the vehicle. The first type consisted of damage sustained before the rollover and second consisted of damage which occurred after the rollover began.

The initial impact saw moderate damage to the front right of the vehicle involving the impacting wheel being pushed into the rear of the wheel well. Sheet metal along the right side of the vehicle was crushed against the barrier as the rear of the vehicle came into contact with the barrier. Upon impact, the right rear hub and right end of the rear axle were forced backward, breaking portions of the rear suspension and apparently pulling the drive shaft out of the transmission housing. No major additional damage was incurred until the rollover was initiated.

The rollover caused major damage to all sides of the vehicle including the top and undercarriage. With the forward end of the drive shaft broken loose from the transmission, it was allowed to swing freely but did not detach from the rear axle. The passenger side of the cab was crushed to a level even with the bottom of the door window.

All four wheels remained attached to the vehicle and no large pieces of debris were ejected during or after impact.

2.2.1.7. Barrier Damage - Test 512

The barrier sustained a 200 mm-long gouge just upstream from the impact area. The gouge was 20 to 100 mm wide and up to 20 mm deep. A second gouge, located just downstream from impact, was only half the size of the first. Other barrier damage was cosmetic only, consisting of scrapes and tire marks. Both of the right side tires left marks along the face of the barrier for the 6.5 m of contact. Small amounts of concrete spalled from the face of the barrier where the vehicle's sheet metal made contact.

2.2.1.8. Impact Description - Test 513

The 8010 kg van-bodied truck impacted the bridge rail at 83.5 km/h and 15.0 degrees. The impact location was 3.2 m in front of the bridge rail expansion joint. At

impact the vehicle rolled to the right lifting both left wheels off the ground about 1 m. The U-bolt holding the front right leaf springs to the front axle broke, allowing the right front wheel to be pushed back under the cab. The vehicle continued to make contact with the barrier for approximately 15 m, after which the vehicle righted itself and continued to a point of rest on an earth berm.

The 2908 kg of ballast, comprised of two separate pallets of sand bags strapped down to the cargo floor, shifted slightly during impact. While the pallets were constrained by 150 mm angle iron, the sand bags were only held down by 100 mm trucking straps. Consequently, the sand was allowed to shift to the right by about 100 mm. It is unlikely that the shifting sand affected the test significantly. None of the sand bags broke lose during the test.

Figure 2.23 - 513 Test Vehicle

Figure 2.24 - Vehicle 513 Relative To Type 70 Barrier

Figure 2.25 - Overall View Of Ballast In Test 513

Figure 2.26 - Two Pallets Of Sand Used For Ballast on Test 513

Figure 2.27 - 150 mm Angle Irons Were Used To Constrain The Pallets Of Sand for Test 513

Figure 2.28 - Keeper Plates Used With The 150 mm Angle Iron on Test 513

Figure 2.29 - Vehicle 513 During Impact

Figure 2.30 - Vehicle 513 During Impact

Figure 2.31 - Post Impact Location For Vehicle 513

Figure 2.32 - Right Side Of Cab For Test 513 After Test

Figure 2.33 - Front Of Vehicle 513 After Test

Figure 2.34 - Test 513 Data Summary Sheet

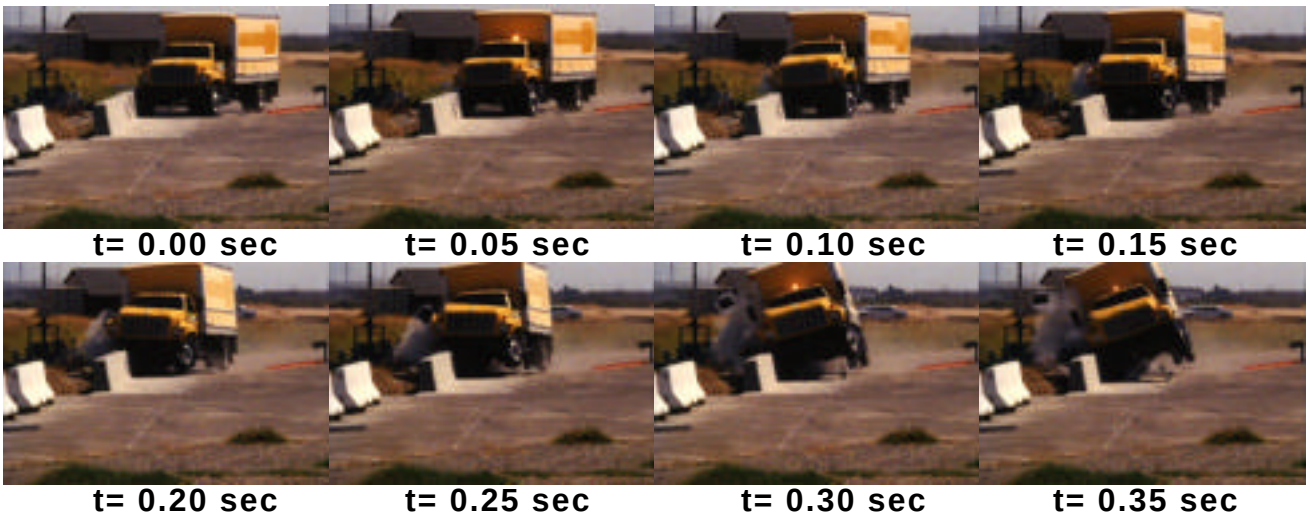

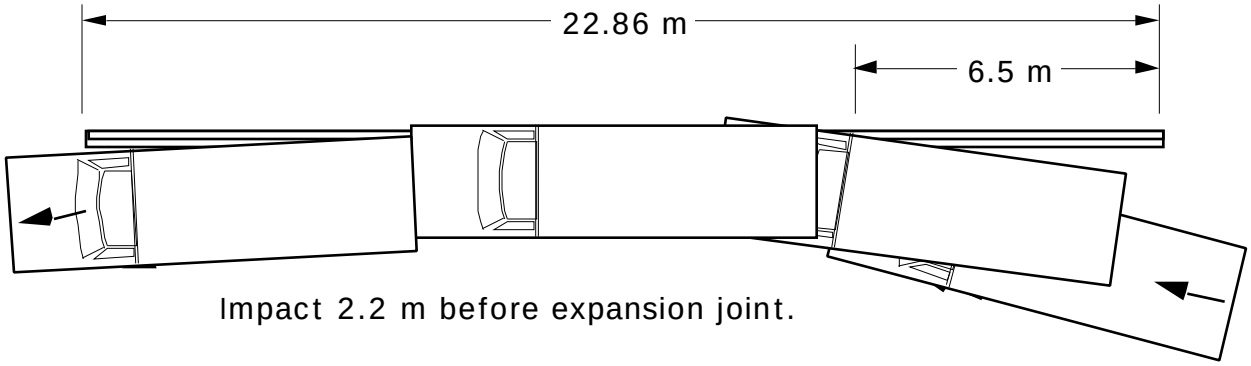

Test Barrier

Type:	Type 70 Bridge Rail
Length:	22.9 m
Test Date:	September 3, 1997
Test Vehicle:	
Model:	1992 GMC Topkick
Inertial Mass:	8010 kg
Impact / Exit Velocity:	83.5 km/h / 71 km/h
Impact / Exit Angle:	15.0 / 4°
Test Dummy:	
Type:	NA
Weight / Restraint:	NA
Position:	NA
Test Data:	
Occ. Impact Velocity (Long / Lat):	not measured
Ridedown Acceleration (Long / Lat):	not measured
Max. 50 ms Avg. Accel (Long / Lat	not measured
Interior: OCDI[1]	RF0000000
Barrier Damage:	The barrier was scraped during the time of vehicle contact. Damage was mainly limited to minor spalling.

2.2.1.9. Vehicle Damage - Test 513

The impacting tire was pushed back into the rear of the wheel well which severed the u-bolt connecting the leaf springs to the front axle. The wheel pushed into the battery box, which in turn pushed into the fuel tank. Although the battery box did sustain substantial crushing, the gas tank was only slightly crumpled.

2.2.1.10. Barrier Damage - Test 513

The barrier was scraped along the face and the top leaving exposed patches of aggregate over a 2.5 m length. There was also scraping along the top edge of the barrier where the vehicle's cargo box came in contact. The tire marks along the barrier were only slightly longer than the scraping along the face.

2.2.1.11. Impact Description - Test 515

Following impact at a speed and angle of 100.4 km/h and 24.2°, the vehicle started to roll to the right, allowing all four wheels to leave the ground. During this initial impact, the right front wheel turned sharply to the left. 0.5 seconds after impact (15 m), the right wheels regained contact with the pavement. 0.2 seconds later the right front wheel pulled under the vehicle and broke the rim apart at its seam. The front rim and tire were dislodged from the vehicle 1.2 seconds after impact.

The exit speed and angle were 54 km/h and 8°, respectively. A maximum pitch of -20.7° occurred as the vehicle's front came into contact with the ground shortly after impact.

Figure 2.35 - Right Side Of Vehicle 515

Figure 2.36 - Impact Location For Test 515

Figure 2.37 - Vehicle 515 Bumper Location (Front Angle)

Figure 2.38 - Vehicle 515 Bumper Location (Back Angle)

Figure 2.39 - Vehicle 515 During Impact

Figure 2.40 - Vehicle 515 During Impact

Figure 2.41 - Scuff Marks On The Barrier for Test 515

Figure 2.42 - Front Right Side Of Vehicle 515 After Impact

Figure 2.43 - The Front Right Tire Of Vehicle 515 After Impact

Figure 2.44 - Test 515 Data Summary Sheet

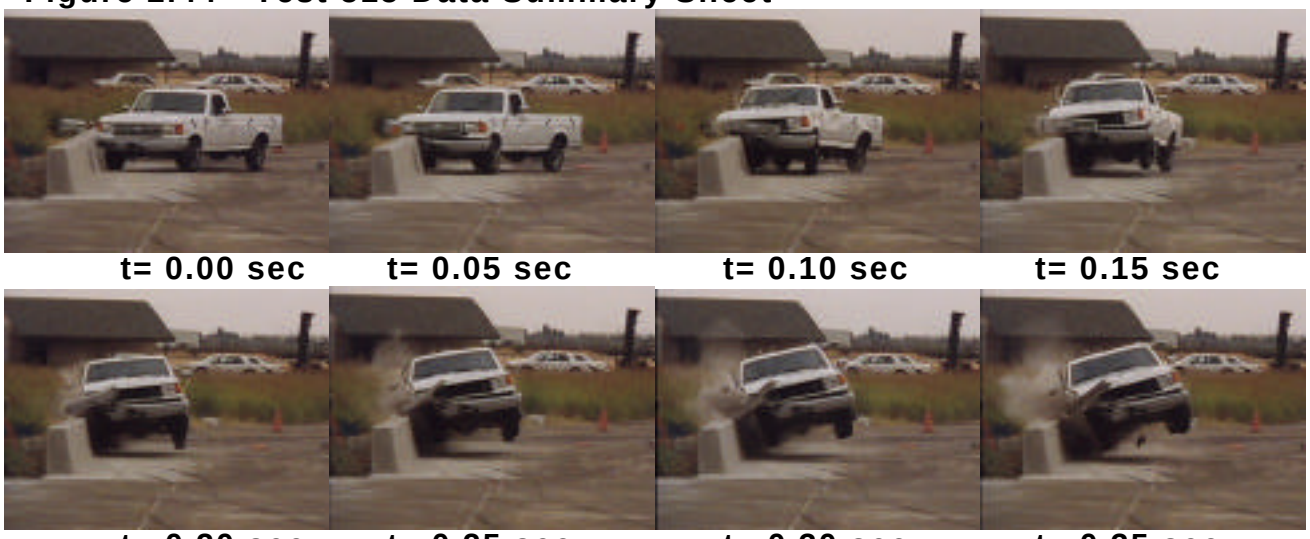

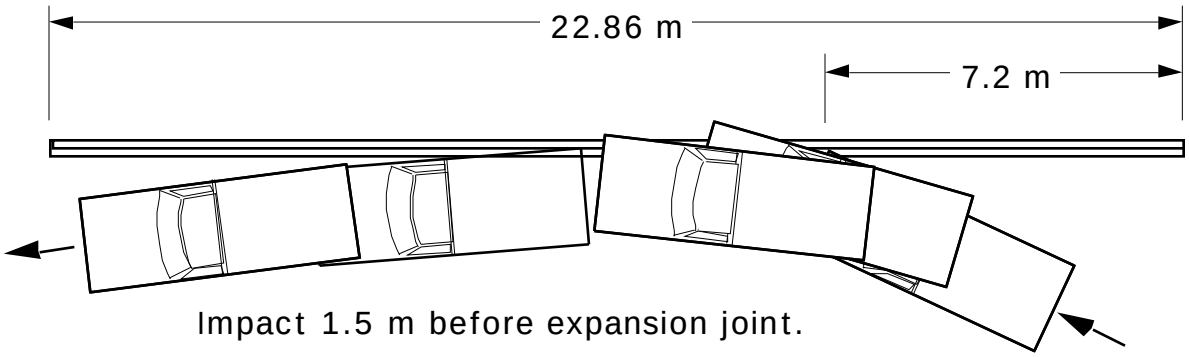

Test Barrier

Type:	Type 70 Bridge Rail
Length:	22.9 m
Test Date:	July 23, 1997
Test Vehicle:	
Model:	1991 Ford F250
Inertial Mass:	2009
Impact / Exit Velocity:	100.4 km/h / 54 km/h
Impact / Exit Angle:	24.2° / 8°
Test Dummy:	
Type:	NA
Weight / Restraint:	NA
Position:	NA
Test Data:	
Occ. Impact Velocity (Long / Lat):	5.46 m/s / 6.16 m/s
Ridedown Acceleration (Long / Lat):	-8.2g / -14.1g
Max. 50 ms Avg. Accel (Long / Lat):	-5.7g / -11.9g
Exterior: VDS[7]/CDC[8]	FR-5, RD-5 / 01RFEW3
Interior: OCDI[1]	RF0001000
Barrier Damage:	Damage consisted of only moderate scraping and tire scuffing over a length of four meters

2.2.1.12. Vehicle Damage - Test 515

The vehicle received moderate crushing in the impacted area of the body with scuff marks along the side. The impacting right front wheel was forced sharply to the left, breaking portions of the steering linkage and causing enough stress to the wheel rim to split the seam. The outer portion of the rim was dislodged as the vehicle traveled away from the impact area. The back right wheel was also dislodged from the vehicle in the same manner as the front one. Additionally, the tailgate was pulled from its hinge points during the initial impact but was restrained by cables normally used to hold it level when in the horizontal position.

2.2.1.13. Barrier Damage - Test 515

Since this was a repeat of test 512, the impact location for test 515 was set at the same location as test 512. In order to minimize the effects that test 512 had made on the barrier (i.e. spalling and scraping on the barrier face), the barrier had been patched with a high strength vertical patching material and painted. The subsequent impact damage due to Test 515 consisted of only moderate scraping and tire scuffing. The total damage length was only slightly more than 4 m.

2.3. Discussion of Test Results - Crash Tests

2.3.1. General - Evaluation Methods (Tests 511-513,515)

NCHRP Report 350[1] stipulates that crash test performance be assessed according to three evaluation factors: 1) Structural Adequacy, 2) Occupant Risk, and 3) Vehicle Trajectory.

The structural adequacy, occupant risk and vehicle trajectories associated with both barriers were evaluated in comparison with Tables 3.1 and 5.1 of NCHRP Report 350.

2.3.2. Structural Adequacy

The structural adequacy of the bridge rail is acceptable. There was no measurable movement of the rail in any of the tests. During the time of contact between the test vehicles and the barriers there were negligible amounts of scraping and spalling.

A detailed assessment summary of structural adequacy is shown in Table 2.2 through Table 2.5.

2.3.3. Occupant Risk

The occupant risk for the Type 70 is also acceptable. In each of the tests, the spalling concrete did not exhibit any tendency to penetrate (or show sign of penetration) into the occupant compartment of the vehicles. All of the calculated occupant ridedown accelerations and occupant impact velocities were within the "preferred" range, with the following exception: the lateral ridedown acceleration for Test 511 was 16 g's, which is higher than the preferred 12 g's, but is still lower than the maximum of 20 g's.

Please refer to Table 2.2 through Table 2.5 for a detailed assessment summary of occupant risk. While an assessment summary table for test 512 is included, the results of this test were not used to evaluate the performance of the barrier due to the unique snagging problem caused by the non-standard rear hub .

2.3.4. Vehicle Trajectory

The vehicle trajectory for the Type 70 testing is also acceptable.

The detailed assessment summaries of vehicle trajectories may be seen in Table 2.2 through Table 2.6.

Table 2.2 - Test 511 Assessment Summary

Test No. 511
Date May 6,1997
Test agency California Dept. of Transportation

Evaluation Criteria	Test Results	Assessment
Structural Adequacy		
A. Test article should contain and redirect the vehicle; the vehicle should not penetrate, underride, or override the installation although controlled lateral deflection of the article is acceptable	The vehicle was contained and smoothly redirected	pass
Occupant Risk		
D. Detached elements, fragments or other debris from the test article should not penetrate or show potential for penetrating the occupant compartment, or present an undue hazard to other traffic, pedestrians, or personnel in a work zone. Deformation of, or intrusions into, the occupant compartment that could cause serious injuries should not be permitted.	The impact resulted only in a small amount of barrier spalling. Debris generated was insignificant. There was no significant deformation of the occupant compartment.	pass
F. The vehicle should remain upright during and after collision although moderate roll, pitching and yawing are acceptable	The maximum yaw, pitch and roll were -28.2, 3.6, and 12.7 degrees, respectively. All minimal.	pass
H. Occupant impact velocities (see Appendix A, Section A5.3 for calculation procedure) should satisfy the following:		
Occupant Impact Velocity Limits (m/s)		
Component / Preferred / Maximum		
Longitudinal and lateral / 9 / 12	Long. Occ. Impact Vel. = 4.51 m/s Lat. Occ. Impact Vel. = 7.22 m/s	pass
I. Occupant Ridedown Accelerations (see Appendix A, Section A5.3 for calculation procedure) should satisfy the following:		
Occupant Ridedown Acceleration Limits (G's)		
Component / Preferred / Maximum		
Longitudinal and lateral / 12 / 20	Longitudinal Acceleration. = -2.9 g's Lateral Acceleration. = -16.0 g's	pass
Vehicle Trajectory		
K. After collision it is preferable that the vehicle's trajectory not intrude into adjacent traffic lanes	The vehicle maintained a relatively straight course after exiting the barrier	pass
M. The exit angle from the test article preferably should be less that 60 percent of the test impact angle, measured at time of vehicle loss of contact with test device."	The exit angle was12.1 degrees, approximately 60% of the impact angle)	pass

Table 2.3 - Test 512 Assessment Summary

Test No. 512
Date June 11, 1997
Test agency California Dept. of Transportation

Evaluation Criteria	Test Results	Assessment
Structural Adequacy		
A. Test article should contain and redirect the vehicle; the vehicle should not penetrate, underride, or override the installation although controlled lateral deflection of the article is acceptable.	The vehicle was contained and smoothly redirected	pass
Occupant Risk		
D. Detached elements, fragments or other debris from the test article should not penetrate or show potential for penetrating the occupant compartment, or present an undue hazard to other traffic, pedestrians, or personnel in a work zone. Deformation of, or intrusions into, the occupant compartment that could cause serious injuries should not be permitted.	Only moderate amounts of spalling were created during impact. There was no significant debris from the vehicle. There was substantial deformation of the occupant compartment.	fail
F. The vehicle should remain upright during and after collision although moderate roll, pitching and yawing are acceptable.	The yaw and pitch were minimal . However, the vehicle rolled over beginning 10 m past the impact location	fail
Vehicle Trajectory		
K. After collision it is preferable that the vehicle's trajectory not intrude into adjacent traffic lanes.	The vehicle maintained a relatively straight course after exiting the barrier, but starting rolling after 10 m.	pass
L. The occupant impact velocity in the longitudinal direction should not exceed 12 m/sec and the occupant ridedown acceleration in the longitudinal direction should not exceed 20 G's.	Long. Occ. Impact Vel. = 6.07 Long. Occ. Ridedown = -6.9	pass
M. The exit angle from the test article preferably should be less that 60 percent of the test impact angle, measured at time of vehicle loss of contact with test device."	Exit angle = 5° , or 20% of the impact angle	pass

Table 2.4 - Test 513 Assessment Summary

Test No. 513
Date September 3, 1997
Test agency California Dept. of Transportation

Evaluation Criteria	Test Results	Assessment
Structural Adequacy		
A. Test article should contain and redirect the vehicle; the vehicle should not penetrate, underride, or override the installation although controlled lateral deflection of the article is acceptable	The vehicle was contained and smoothly redirected	pass
Occupant Risk		
D. Detached elements, fragments or other debris from the test article should not penetrate or show potential for penetrating the occupant compartment, or present an undue hazard to other traffic, pedestrians, or personnel in a work zone. Deformation of, or intrusions into, the occupant compartment that could cause serious injuries should not be permitted.	There was not any significant debris from the test article nor any substantial deformation of the occupant compartment.	pass
G. It is preferable, although not essential, that the vehicle remain upright during and after collision.	The vehicle remained upright	pass
Vehicle Trajectory		
K. After collision it is preferable that the vehicle's trajectory not intrude into adjacent traffic lanes	The vehicle maintained a relatively straight course after exiting the barrier	pass
M. The exit angle from the test article preferably should be less that 60 percent of the test impact angle, measured at time of vehicle loss of contact with test device."	Exit angle 4 degrees, or 27%	pass

Table 2.5 - Test 515 Assessment Summary

Test No. 515
Date July 23, 1997
Test agency California Dept. of Transportation

Evaluation Criteria	Test Results	Assessment
Structural Adequacy		
A. Test article should contain and redirect the vehicle; the vehicle should not penetrate, underride, or override the installation although controlled lateral deflection of the article is acceptable	The vehicle was contained and smoothly redirected	pass
Occupant Risk		
D. Detached elements, fragments or other debris from the test article should not penetrate or show potential for penetrating the occupant compartment, or present an undue hazard to other traffic, pedestrians, or personnel in a work zone. Deformation of, or intrusions into, the occupant compartment that could cause serious injuries should not be permitted.	There was no significant debris from test article nor substantial deformation of the occupant compartment.	pass
F. The vehicle should remain upright during and after collision although moderate roll, pitching and yawing are acceptable	The maximum yaw, pitch and roll were -34.9, -20.7, and 26.7 degrees, respectively - all moderate	pass
Vehicle Trajectory		
K. After collision it is preferable that the vehicle's trajectory not intrude into adjacent traffic lanes	The vehicle maintained a relatively straight course after exiting the barrier	pass
L. The occupant impact velocity in the longitudinal direction should not exceed 12 m/sec and the occupant ridedown acceleration in the longitudinal direction should not exceed 20 G's	Long. Occ. Impact Vel. = 5.46 Long. Occ. Ridedown = -8.2	pass
M. The exit angle from the test article preferably should be less that 60 percent of the test impact angle, measured at time of vehicle loss of contact with test device."	Exit angle 8 degrees, or 32%	pass

Table 2.6 - Vehicle Trajectories and Speeds

Test Number	Impact Angle (deg)	60% of Impact Angle (deg)	Exit Angle (deg)	Impact Speed, V_i (km/h)	Exit Speed, V_e (km/h)	Speed Change V_i - V_e (km/h)
511	20.0	12.0	12.1	104.1	92	12
512	25.1	15.1	5	97.0	65	32
513	15.0	9.0	4	83.5	71	12
515*	24.2	14.5	8	100.4	54	46

*Test 515 is a retest of Test 512.

3. CONCLUSION

Based on the construction and testing of the single slope bridge rail discussed in this report, the following conclusions can be drawn:

1. The Type 70 bridge rail can smoothly and successfully contain an 820 kg sedan impacting at 20 degrees and 100 km/h.

2. The Type 70 bridge rail can successfully contain and redirect a 2000 kg pickup truck impacting at 25 degrees and 100 km/h.

3. The Type 70 bridge rail can successfully contain and redirect an 8000 kg van-bodied truck impacting at 15 degrees and 80 km/h.

4. Damage to the Type 70 bridge rail in accidents similar to the tests conducted for this project will result in small to moderate amounts of scraping and spalling of the rail. Therefore, the majority of impacts into the rail will not require urgent repairs.

5. The Type 70 bridge rail meets the criteria set in the National Cooperative Highway Research Program's Report 350 "Recommended Procedures for the Safety Performance Evaluation of Highway Features" under Test Level 4 for longitudinal barriers.

4. RECOMENDATION

1. The Type 70 bridge rail is recommended as a replacement for the Type 25 bridge rail.

5. IMPLEMENTATION

The Office of Structures Design will be responsible for the preparation of standard plans and specifications for the Type 70 bridge rail, with technical support from the Office of Materials Engineering and Testing Services and the Traffic Operations Program. Similarly, the Office of Structures Design, with assistance from the Office of Materials Engineering and Testing Services and the Traffic Operations Program, will be responsible for the in-service evaluation.

6. REFERENCES

1. ”Recommended Procedures for the Safety Performance Evaluation of Highway Features", Transportation Research Board, National Cooperative Highway Research Program Report 350, 1993.

2. “Roadside Design Guide”, American Association of State Highway and Transportation Officials, 1988.

3. Stoughton, Roger L., “Vehicular Crash Tests of a Slip-Formed, Single Slope, Concrete Median Barrier”, California Department of Transportation, September, 1997.

4. “Guide Specifications For Bridge Railings”, American Association of State Highway and Transportation Officials, 1989.

5. “Development of a Comprehensive Bridge Specification and Commentary” - Section 13, National Cooperative Highway Research Program Project 12-33, 1993.

6. “Standard Specifications”, California Department of Transportation, Sacramento, CA., 1989.

7. “Vehicle Damage Scale for Traffic Accident Investigators”, Traffic Accident Data Project, National Safety Council, 1968.

8. “Collision Deformation Classification” - SAE J224 Mar80, SAE Recommended Practices, 1980.

7. APPENDICIES

7.1. Test Vehicle Equipment

The test vehicles were modified as follows for the crash tests:

- The gas tanks on the test vehicles were disconnected from the fuel supply line and drained. A 12 L safety gas tank was installed in the trunk compartment (or truck bed) and connected to the fuel supply line. The stock fuel tanks had dry ice added in order to purge the gas vapors.

  (For Test 511, a 12 L safety tank was not installed because the vehicle was towed to impact instead of self-powered.)

- Two pairs of 12-volt wet cell motorcycle storage batteries were mounted in the vehicle. The first pair of batteries operated the solenoid-valve braking system and other test equipment in the vehicle. The second pair of batteries powered the transient data recorder.

- A 4800 kPa CO_2 system, actuated by a solenoid valve, controlled remote braking after impact and emergency braking any other time. Part of this system was a pnematic ram which was attached to the brake pedal. The operating pressure for the ram was adjusted through a pressure regulator during a series of trial runs prior to the actual test. Adjustments were made to assure the shortest stopping distance without locking up the wheels. When activated, the brakes could be applied in less than 100 milliseconds.

- The remote brakes were controlled at a console trailer. A cable ran from the console trailer to an electronic instrumentation trailer. From there, the remote brake signal was carried on one channel of a multi-channel tether line which was connected to the test vehicle. Any loss of continuity in these cables would have activated the brakes and cut off the ignition automatically. Also, when the brakes were applied by remote control from the console trailer, the ignition was automatically cut by removing power to the coil.

- For test 511, the vehicle speed was regulated by the speed of a tow vehicle. The tow vehicle pulled a tow cable through a series of sheaves arranged to produce a

2:1 mechanical advantage. Accurate speed was attained though a calibrated speedometer in the tow vehicle

- For all tests except 511, an accelerator switch was located on the rear fender of the vehicle. The switch opened an electric solenoid which, in turn, released compressed CO2 from a reservoir into a pnumatic ram that had been attached to the acclerator pedal. The CO2 pressure for the accelerator ram was reguated to same pressure of the remote braking system.

- For all tests except 511, a speed control device, connected in-line with the primary winding of the coil was used to regulate the speed of the test vehicle based on the signal from a speed sensor attached to one of the wheels. This device was calibrated prior to the test by conducting a series of trial runs through a speed trap comprised of two tape switches set a specified distance apart and a digital timer.

- For all tests except 511, a microswitch was mounted below the front bumper and connected to the ignition system. A trip plate on the ground near the impact point triggered the switch when the car passed over it, which opened the ignition circuit and shut off the vehicle's engine prior to impact.

Table 7.1 - Test 511 Vehicle Dimensions

DATE: 5/6/95
VIN NO: 2CIMR6467N6743016
MAKE: GEO
TEST NO: T511

MODEL: METRO **YEAR:** 1992 **ODOMETER:** 57560 (MI) **TIRE SIZE:** 155R1276S

TIRE INFLATION PRESSURE: 44 (PSI)

MASS DISTRIBUTION (kg) **LF** 257 **RF** 246 **LR** 169 **RR** 170

DESCRIBE ANY DAMAGE TO VEHICLE PRIOR TO TEST: 250 mm CRACK IN WINDSHIELD

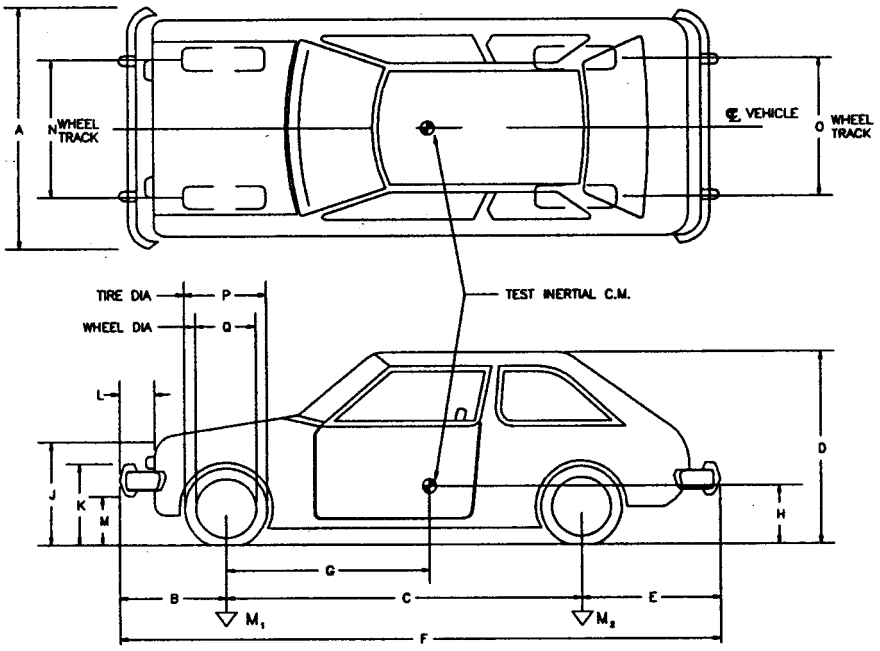

ENGINE TYPE: 3 CYL.

ENGINE CID: 1.5 LITER

TRANSMISSION TYPE :

X **AUTO**

____ **MANUAL**

OPTIONAL EQUIPMENT:

DUMMY DATA:

TYPE: HYBRID II 50th %

MASS: 75 KG

SEAT POSITION: RIGHT FRONT

GEOMETRY (cm)

A 151.1	**D** 139.7	**G** 143.0	**K** 51.2	**N** 134.6	**Q** 33.0
B 196.9	**E** 71.2	**H** 27.9	**L** 10.2	**O** 132.2	
C 236.5	**F** 322.5	**J** 71.2	**M** 24.2	**P** 53.3	

MASS - (kg)	**CURB**	**TEST INERTIAL**	**GROSS STATIC**
M1	485	503	553
M2	327	340	367
MT	812	843	920

DATE: 5/24/97
VIN NO:
MAKE: FORD

Table 7.2 - Test 512 Vehicle Dimensions

TEST NO: T512
1RTHF25HIMLA55802

MODEL: F-250 CUST YEAR: 1991 ODOMETER: 112109.5 (MI) TIRE SIZE: 265-85R16

TIRE INFLATION PRESSURE: 44 (PSI)

MASS DISTRIBUTION (kg) LF 539 RF 559 LR 428 RR 492

DESCRIBE ANY DAMAGE TO VEHICLE PRIOR TO TEST: SMALL DENT ON RIGHT REAR

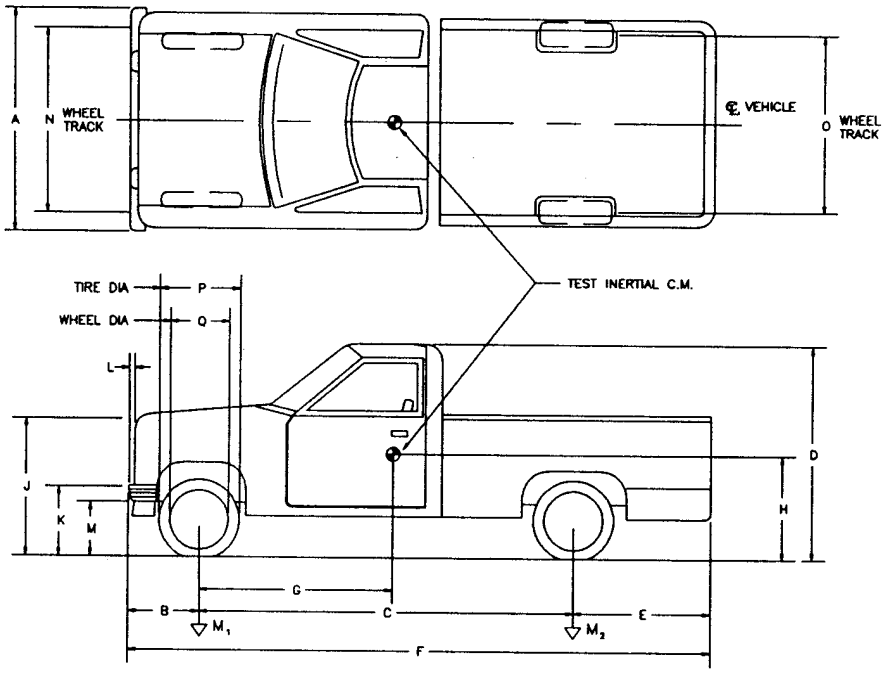

ENGINE TYPE: V8

ENGINE CID: 5.8L

TRANSMISSION TYPE :

X AUTO

____ MANUAL

OPTIONAL EQUIPMENT:

DUMMY DATA:

TYPE: NA

MASS: NA

SEAT POSITION: NA

GEOMETRY (cm)

A 192.3	D 169.3	G 150.5	K 74.0	N 166.0	Q 43.2
B 76.8	E 131.2	H 55.9	L 6.3	O 166.0	
C 340.5	F 544.7	J 120.0	M 50.8	P 79.8	

MASS - (kg)	CURB	TEST INERTIAL	GROSS STATIC
M1	1096	1098	1098
M2	906	920	920
MT	2002	2018	2018

DATE: 8/27/97
VIN NO:
MAKE: GMC

Table 7.3 - Test 513 Vehicle Dimensions

TEST NO: T513
1GD7HIP5NJ516751

MODEL: TOP KICK **YEAR:** 1992 **ODOMETER:** 91934 (MI) **TIRE SIZE:** 11R22.5

MASS DISTRIBUTION (kg) **LF**_____ **RF**_____ **LR**_____ **RR**_____

DESCRIBE ANY DAMAGE TO VEHICLE PRIOR TO TEST: Right rear backup light missing

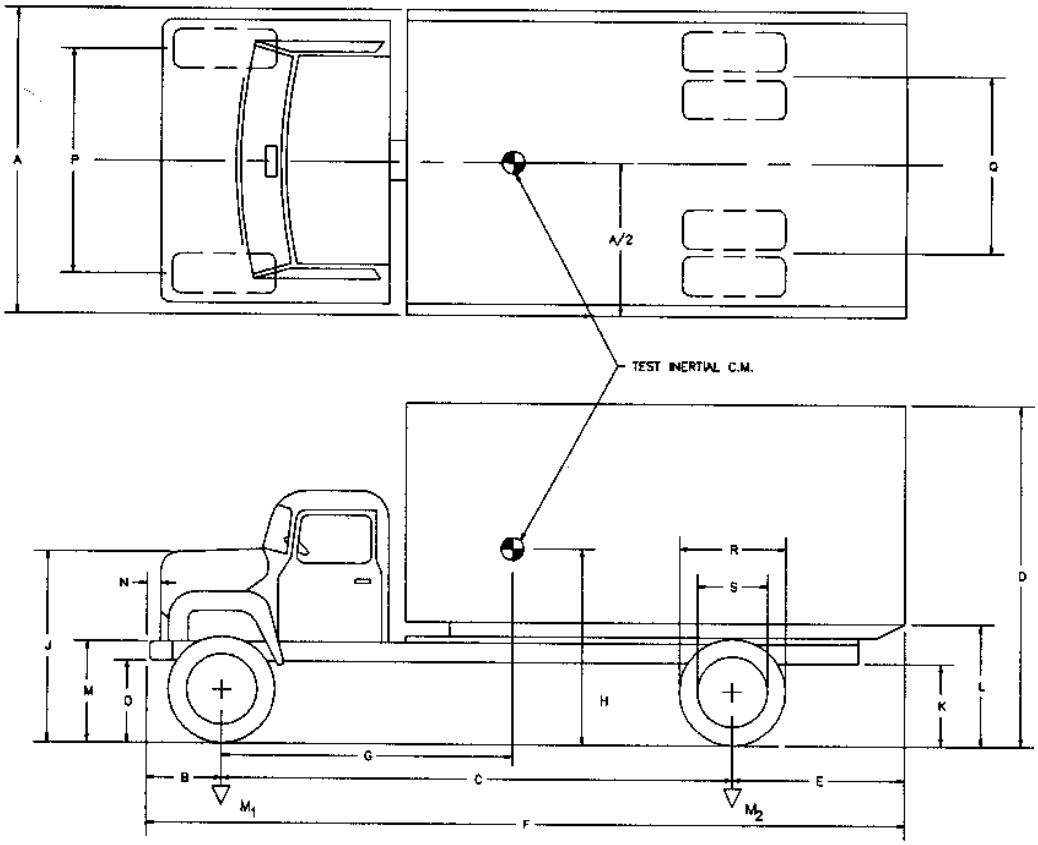

GEOMETRY (cm)

A 243	**D** 345	**G** 363	**K** 73.5	**N** 10	**Q** 183
B 85	**E** 242	**H**	**L** 111	**O** 57	**R** 103
C 530	**F** 858	**J** 174	**M** 96	**P** 202	**S** 59

MASS - (kg)	**CURB**	**TEST INERTIAL**	**GROSS STATIC**
M1	2136	2520	2520
M2	2966	5491	5491
MT	5102	8010	8010

Table 7.4 - Test 515 Vehicle Dimensions

DATE: 7/15/97
VIN NO:
MAKE: FORD

TEST NO: T515
1FTEF25NOMKB03207

MODEL: F-250 **YEAR:** 1991 **ODOMETER:** 47576 (MI) **TIRE SIZE:** lt 215/85r16

TIRE INFLATION PRESSURE: 44 (PSI)

MASS DISTRIBUTION (kg) **LF** 538 **RF** 562 **LR** 467 **RR** 441

DESCRIBE ANY DAMAGE TO VEHICLE PRIOR TO TEST: CRACKED WINDSHIELD, LOOSE HEADLIGHT BRACKET.

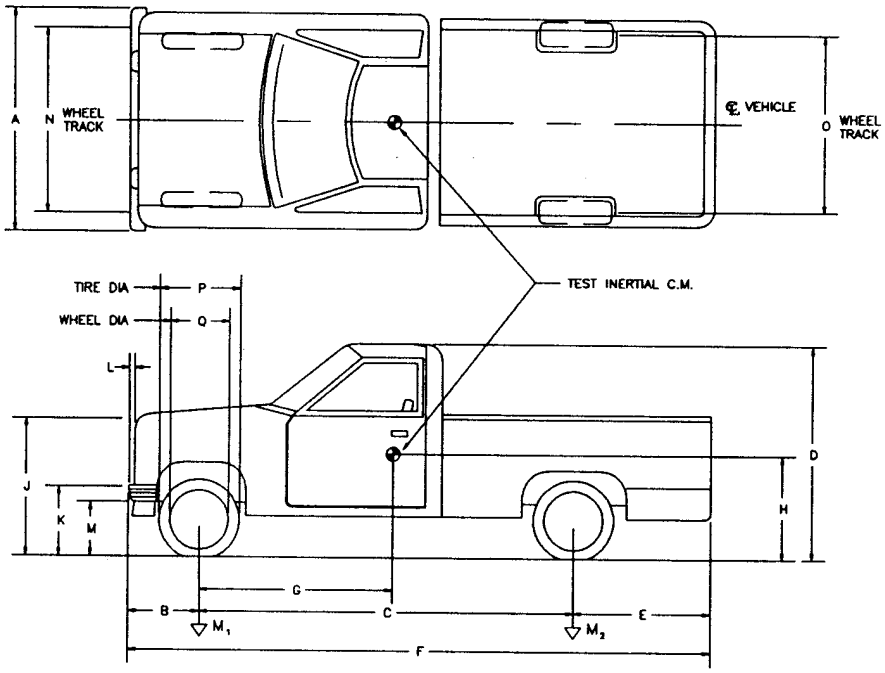

ENGINE TYPE: V8

ENGINE CID: 5 LITER

TRANSMISSION TYPE :

X **AUTO**

____ **MANUAL**

OPTIONAL EQUIPMENT:

SECONDARY FUEL TANK

OVERDRIVE TRANSMISSION

A/C, CRUISE

DUMMY DATA:

TYPE: NA

MASS: NA

SEAT POSITION: NA

GEOMETRY (cm)

A 193	**D** 184	**G** 151.5	**K** 71	**N** 187	**Q** 44.5
B 76	**E** 124	**H** 73	**L** 13	**O** 181	
C 336.5	**F** 534	**J** 122	**M** 45	**P** 77	

MASS - (kg)	**CURB**	**TEST INERTIAL**	**GROSS STATIC**
M1	1126.7	1100	1100
M2	866.4	908	908
MT	1993.1	2009	2009

7.2. Test Vehicle Guidance System

A rail guidance system directed the vehicle into the barrier. The guidance rail, anchored at 6.1 m intervals along its length, was used to guide a mechanical arm which was attached to the front left wheel of each of the vehicles. A rope was used to trigger the release mechanism on the guidance arm, thereby releasing the vehicle from the guidance system before impact.

7.3. Photo - Instrumentation

Several high-speed movie cameras recorded the impact during the crash tests. The types of cameras and their locations are shown Figure 2.1 and Table 7.5.

All of these cameras were mounted on tripods except the three that were mounted on a 10.7-m high tower directly over the impact point on the test barrier.

A video camera was turned on by hand and used for panning during the test. All other cameras were remotely triggered by switches on a console trailer near the impact area which contained eight 12-volt batteries. The test vehicle and test barrier were photographed before and after impact with a normal-speed movie camera, a black and white still camera and a color still camera. A film report of this project has been assembled using edited portions of the crash testing coverage.

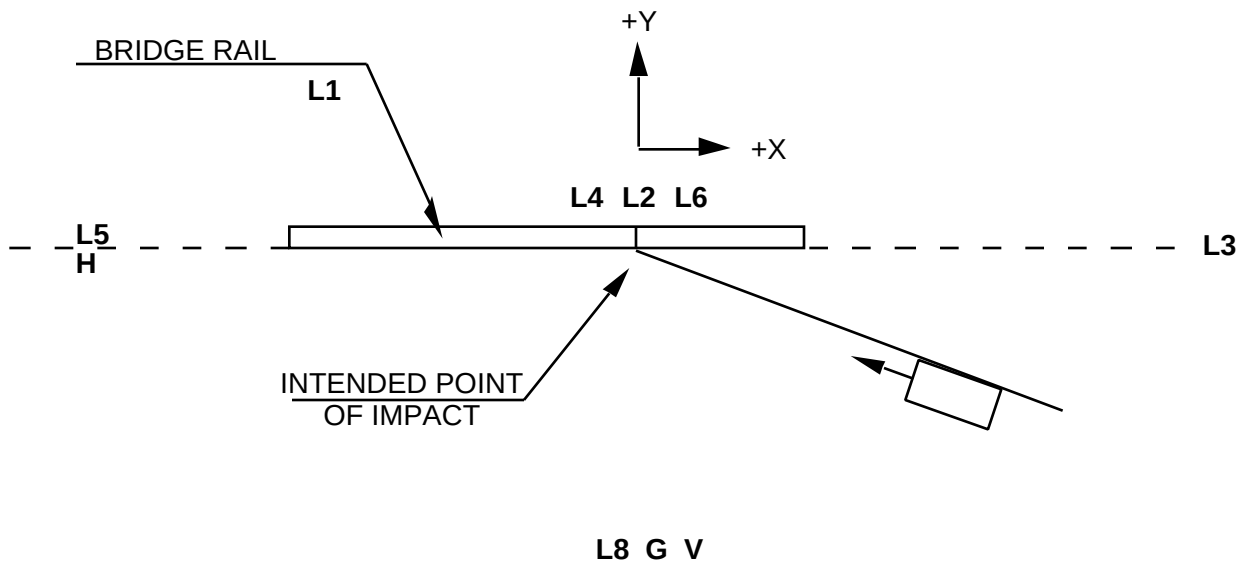

Figure 7.1 - Camera Locations

Table 7.5 - Typical Camera Type and Locations

Typical Coordinates, m						
Camera Label	Film Size (mm)	Camera Type	Rate: (fr./sec.)	Test 511		
				X*	Y*	Z*
L1	16	LOCAM 1	400	-25.0	8.0	1.5
L2	16	LOCAM 2	400	0.0	0.0	12.0
L3	16	LOCAM 3	400	25.3	-0.8	1.5
L4	16	LOCAM 4	400	-0.6	0.0	12.0
L5	16	LOCAM 5	400	-48.0	-0.6	3.5
L6	16	LOCAM 6	400	0.6	0.0	12.0
L8	16	LOCAM 8	400	-2.25	-22.5	1.5
G	16	GISMO	64	-1.5	-28.8	1.5
V	1.27	SONY BETACAM	30	-4.3	-27.7	1.5
H	35	HULTCHER	40	-48.0	-2.0	3.5

Note: Camera location measurements were approximated and are typical for all crash tests involved in this report.

*X and Y locations are relative to the impact point.

The following are the pretest procedures that were required to enable film data reduction to be performed using a film motion analyzer:

1) Butterfly targets were attached to the top and sides of each test vehicles. The targets were located on the vehicle at intervals of 0.305, 0.610 and 1.219 meters (1, 2 and 4 feet.). The targets established scale factors and horizontal and vertical alignment. The test barrier was targeted with stenciled numbers every 2 meters..

2) Flashbulbs, mounted on the test vehicle, were electronically flashed to establish 1) initial vehicle-to-barrier contact, and 2) the time of the application of the vehicle brakes. The impact flashbulbs begin to glow immediately upon activation, but have a delay of several milliseconds before lighting up to full intensity.

3) Five tape switches, placed at 4 m intervals, were attached to the ground near the barrier and were perpendicular to the path of the test vehicle. Flash bulbs were activated sequentially when the tires of the test vehicle rolled over the tape switches. The flashbulb stand was placed in view of most of the cameras. The flashing bulbs were used to correlate the cameras with the impact events and to calculate the impact speed independent of the electronic speed trap. The tape switch layout is shown in Figure 7.2.

4) Critical high-speed cameras had timing light generators which exposed red timing pips on the film at a rate of 100 per second. The pips were used to determine camera frame rates.

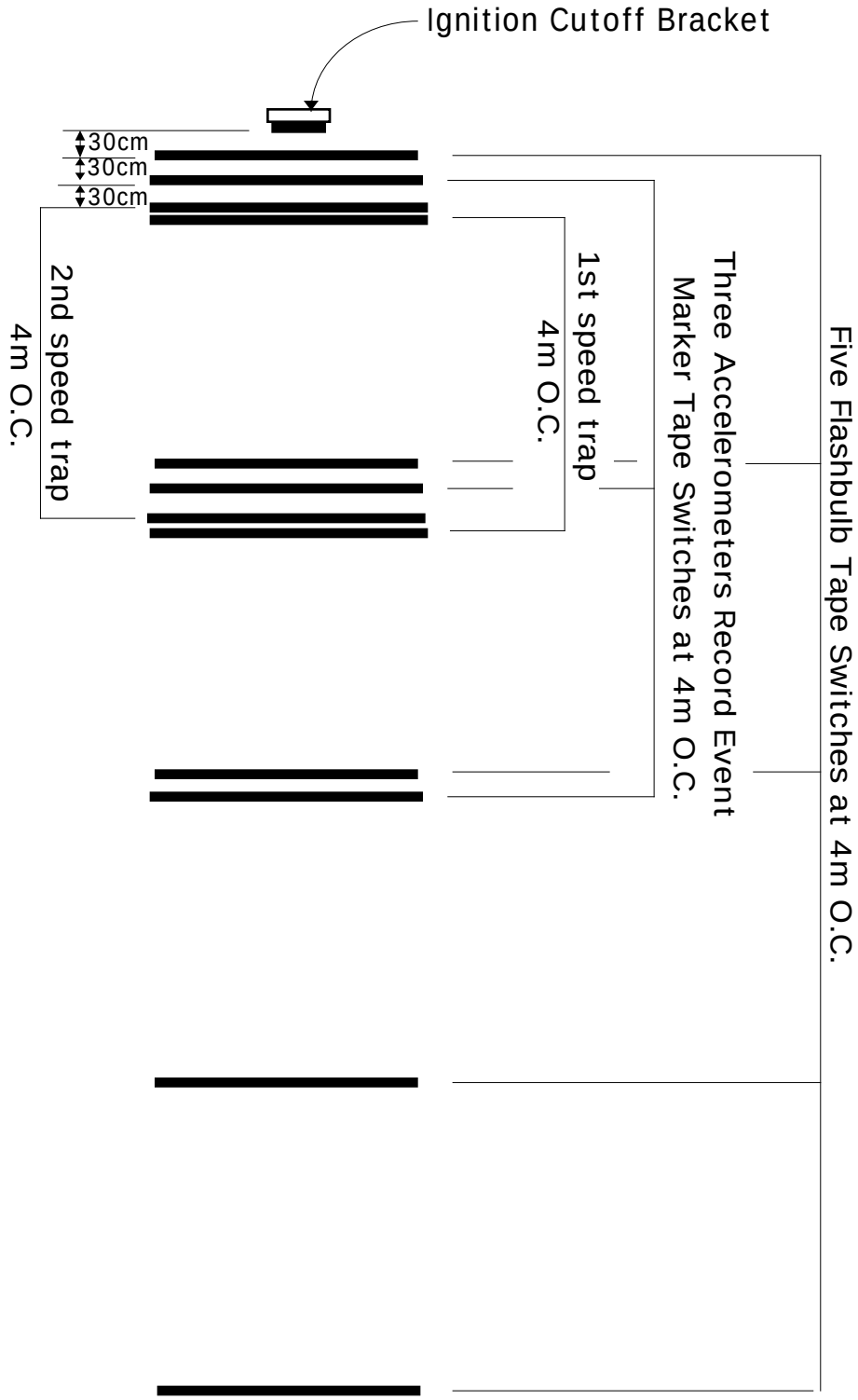

Figure 7.2 - Tape Switch Layout

7.4. Electronic Instrumentation and Data

Transducer data were recorded on a Pacific Instruments digital transient data recorder (TDR) model 5600 which was mounted in the vehicle. The transducers mounted on the vehicle include two sets of accelerometers at the center of gravity, one set of accelerometers 600 mm behind the center of gravity, and one set of rate gyros and the center of gravity (see Section 2.1.5). The TDR data were reduced using a laptop computer.

Three pressure-activated tape switches were placed on the ground in front of the test barrier (see Figure 7.2). They were spaced at carefully measured intervals of 4 m. When the test vehicle tires passed over them, the switches produced sequential impulses or "event blips" which were recorded concurrently with the accelerometer signals on the TDR, serving as "event markers". A tape switch on the front bumper of the vehicle closed at the instant of impact and accomplished two events: 1) an “event marker” was added to the recorded data, and 2) a flash bulbs mounted on the top of the vehicle was activated. A time cycle was recorded continuously on the TDR with a frequency of 500 cycles per second. The impact velocity of the vehicle could be determined from the tape switch impulses and timing cycles. Two other tape switches, connected to a speed trap, were placed 4 m apart just upstream of the test barrier specifically to establish the impact speed of the test vehicle. The tape switch layout for all tape switches is shown in Figure 7.2.

The data curves are shown in Figure 7.4 through Figure 7.8 and include the accelerometer and rate gyro records from the test vehicles. They also show the longitudinal velocity and displacement versus time. These plots were needed to calculate the occupant impact velocity defined in NCHRP Report 350. All curves were calculated using software written by Pacific Instruments and modified by Caltrans.

NOTE: There are no data plots for Test 513 because NCHRP Report 350 did not require accelerometer data.

Table 7.6 - Accelerometer Specifications

TYPE	LOCATION	RANGE	ORIENTATION	TEST NUMBER
STATHAM	VEHICLE C.G.	100 G	LONGITUDINAL	ALL
STATHAM	VEHICLE C.G.	100 G	LATERAL	ALL
STATHAM	VEHICLE C.G.	50 G	VERTICAL	ALL
HUMPHREY	VEHICLE C.G.	180 DEG/SEC	ROLL	ALL
HUMPHREY	VEHICLE C.G.	90 DEG/SEC	PITCH	ALL
HUMPHREY	VEHICLE C.G.	180 DEG/SEC	YAW	ALL
ENDEVCO	VEHICLE C.G.	200 G	LONGITUDINAL	ALL
ENDEVCO	VEHICLE C.G.	200 G	LATERAL	ALL
ENDEVCO	VEHICLE C.G.	200 G	VERTICAL	ALL

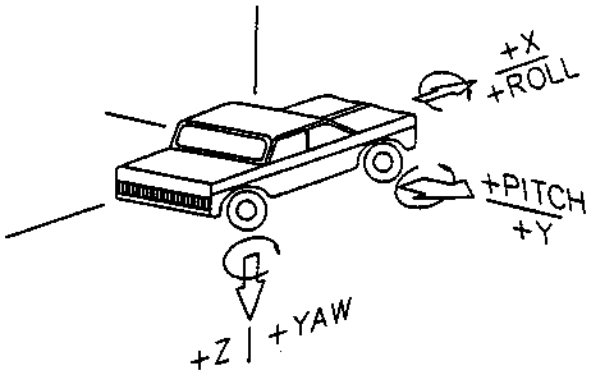

Figure 7.3 - Vehicle Accelerometer Sign Convention

Figure 7.4 - Test 511 Vehicle Accelerations -vs- Time

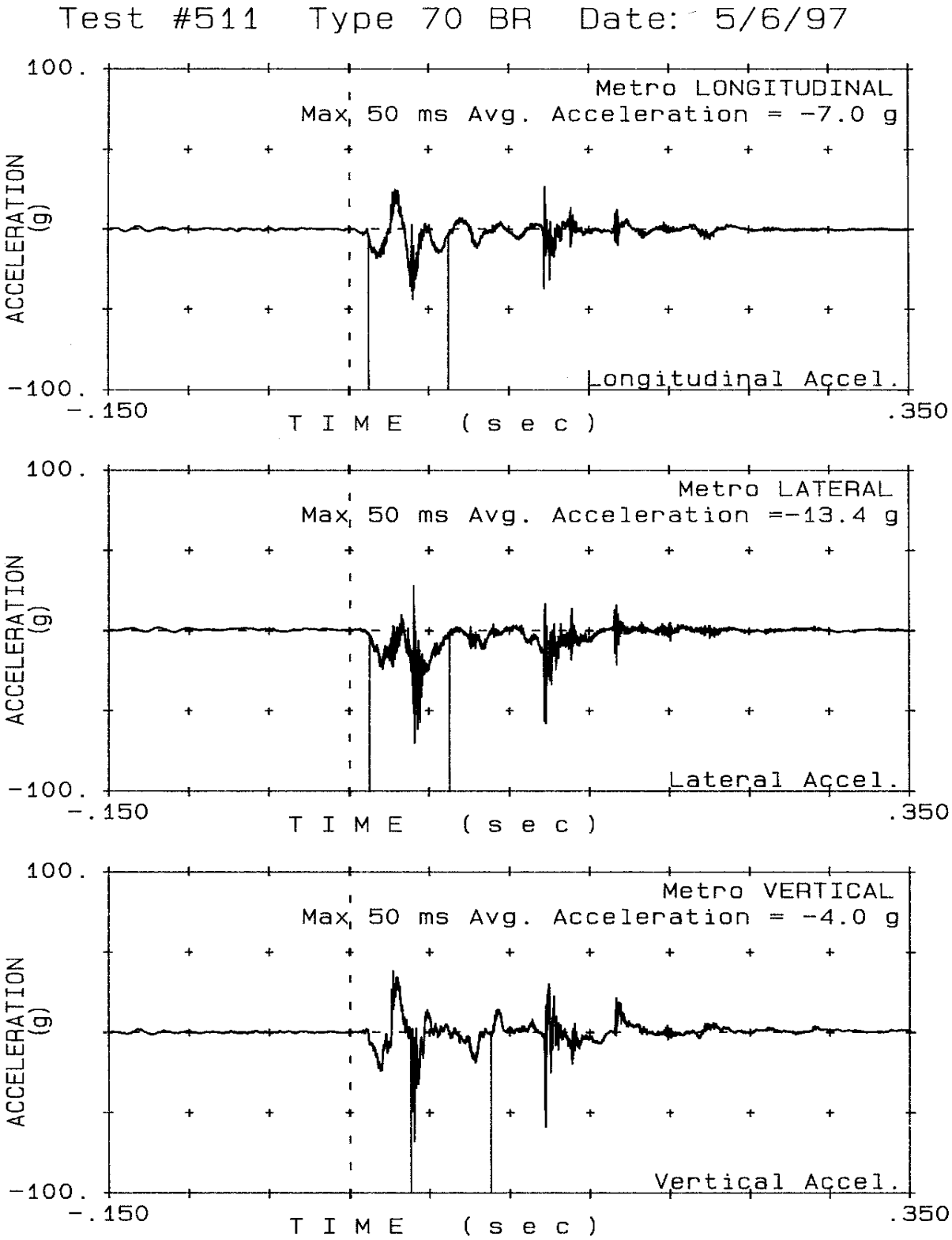

Figure 7.5 - Test 511 Vehicle Longitudinal Acceleration, Velocity and Distance -vs- Time

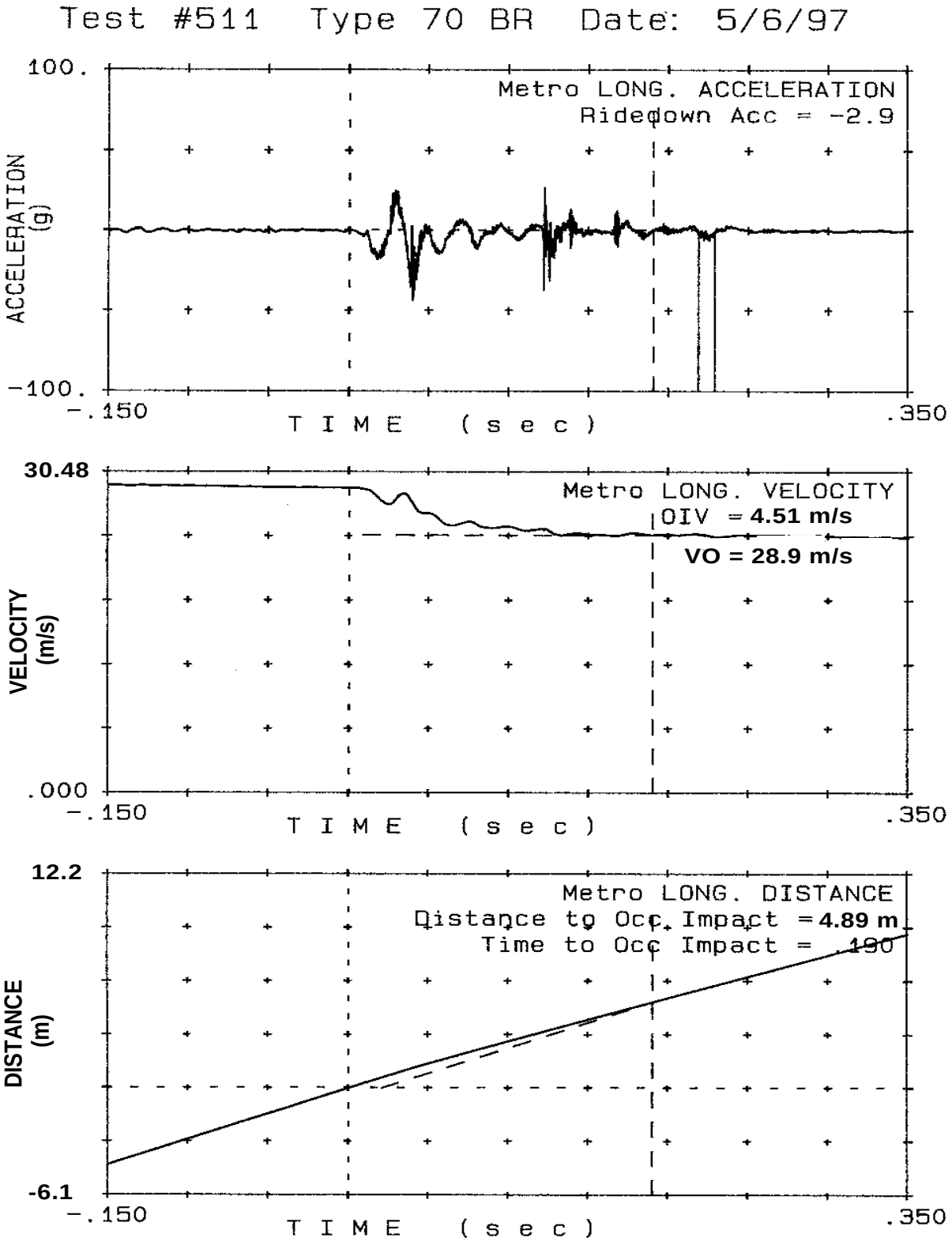

Figure 7.6 - Test 511 Vehicle Lateral Acceleration, Velocity and Distance -vs- Time

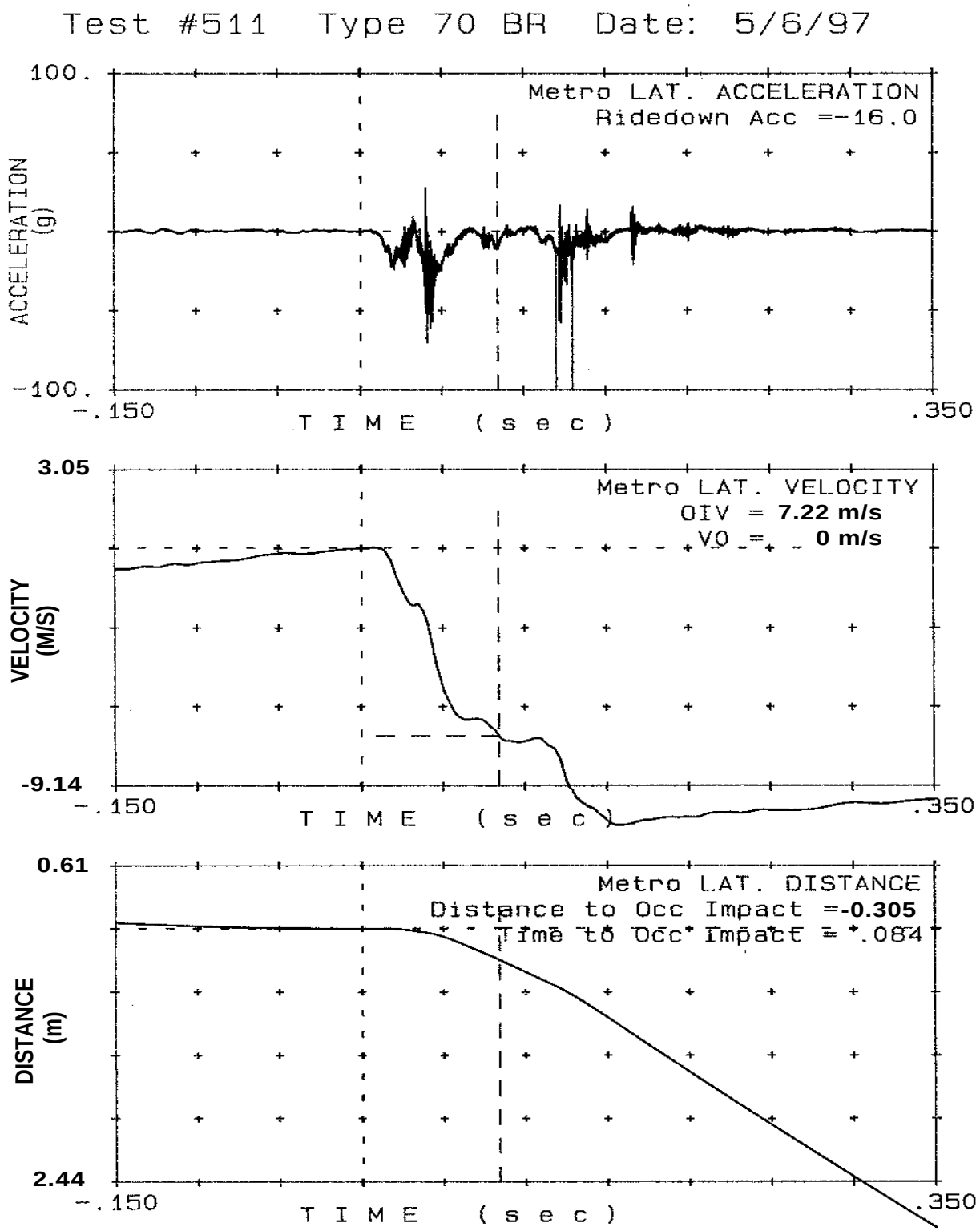

Figure 7.7 - Test 511 Vehicle Roll, Pitch and Yaw -vs- Time

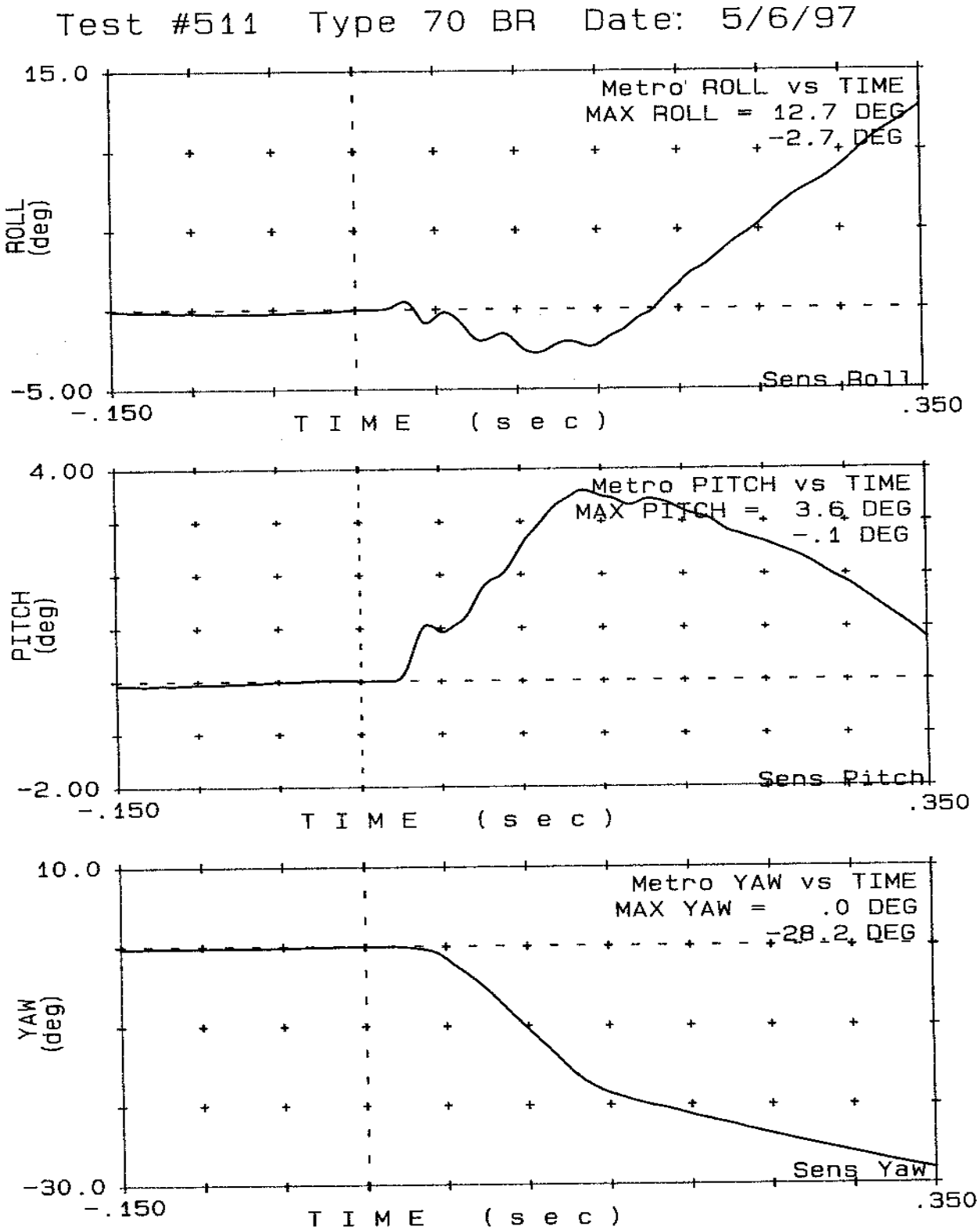

Figure 7.8 - Test 511 Dummy Head Accelerations -vs- Time

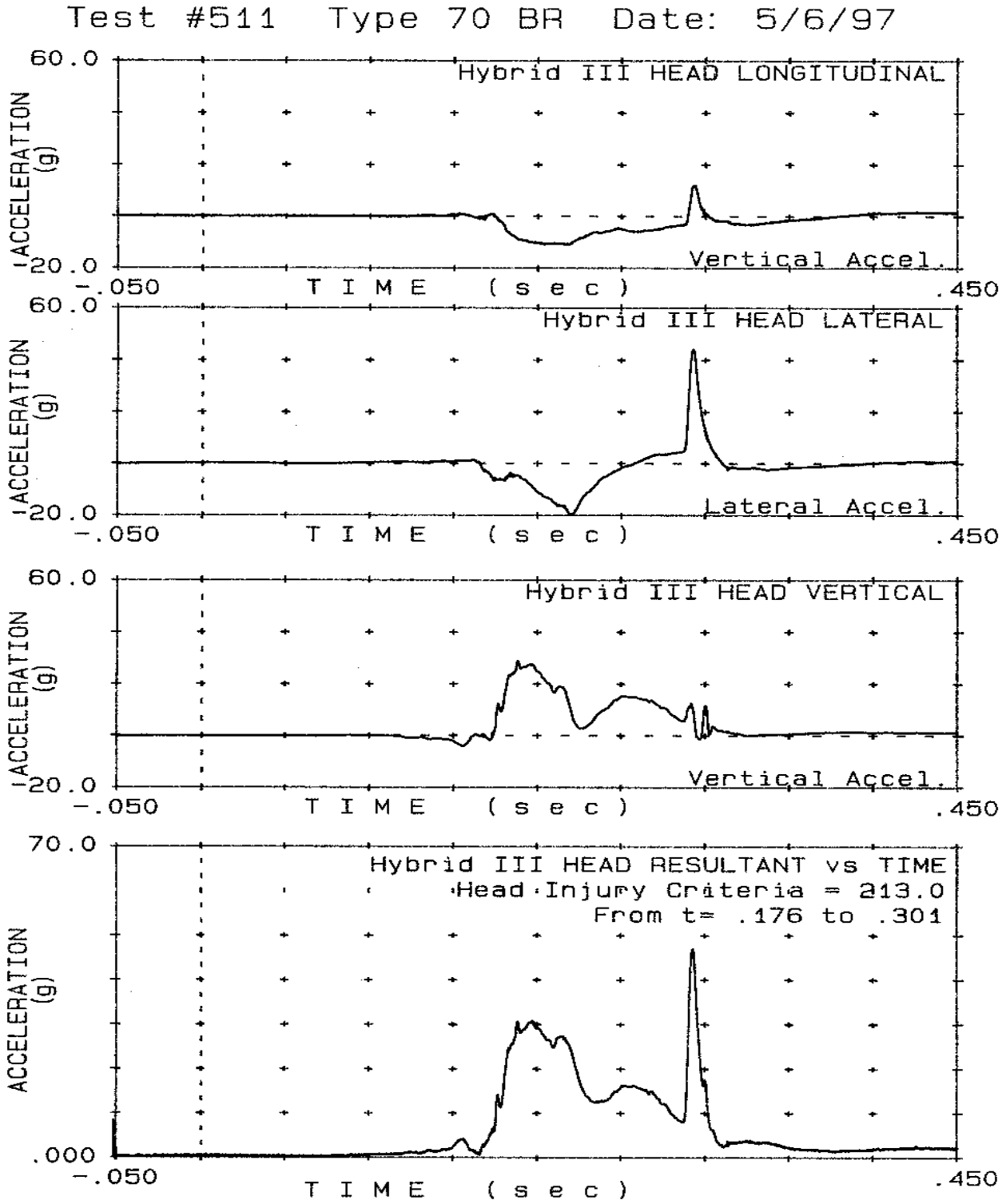

Figure 7.9 - Test 512 Vehicle Accelerations -vs- Time

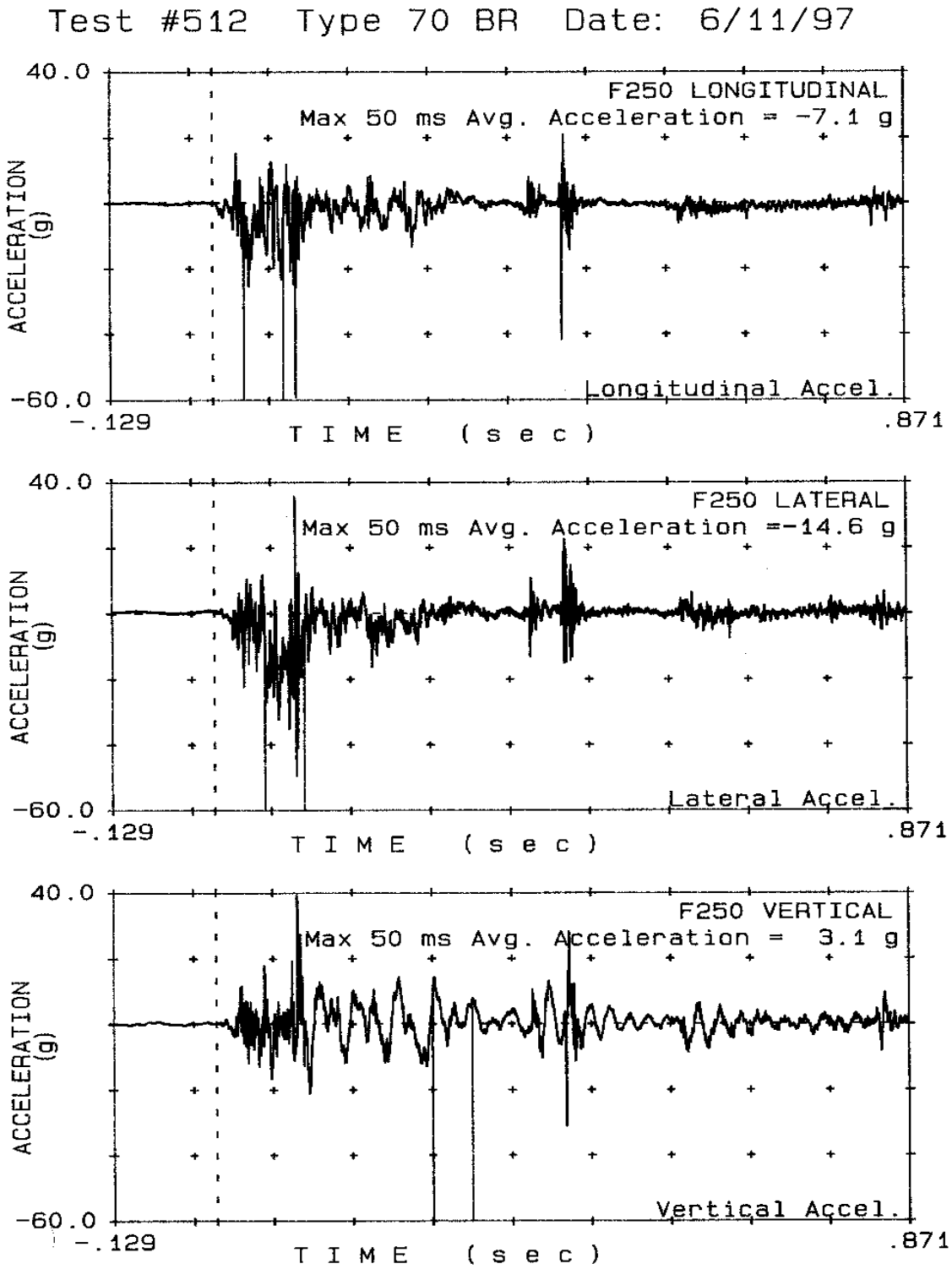

Figure 7.10 - Test 512 Vehicle Longitudinal Acceleration, Velocity and Distance -vs- Time

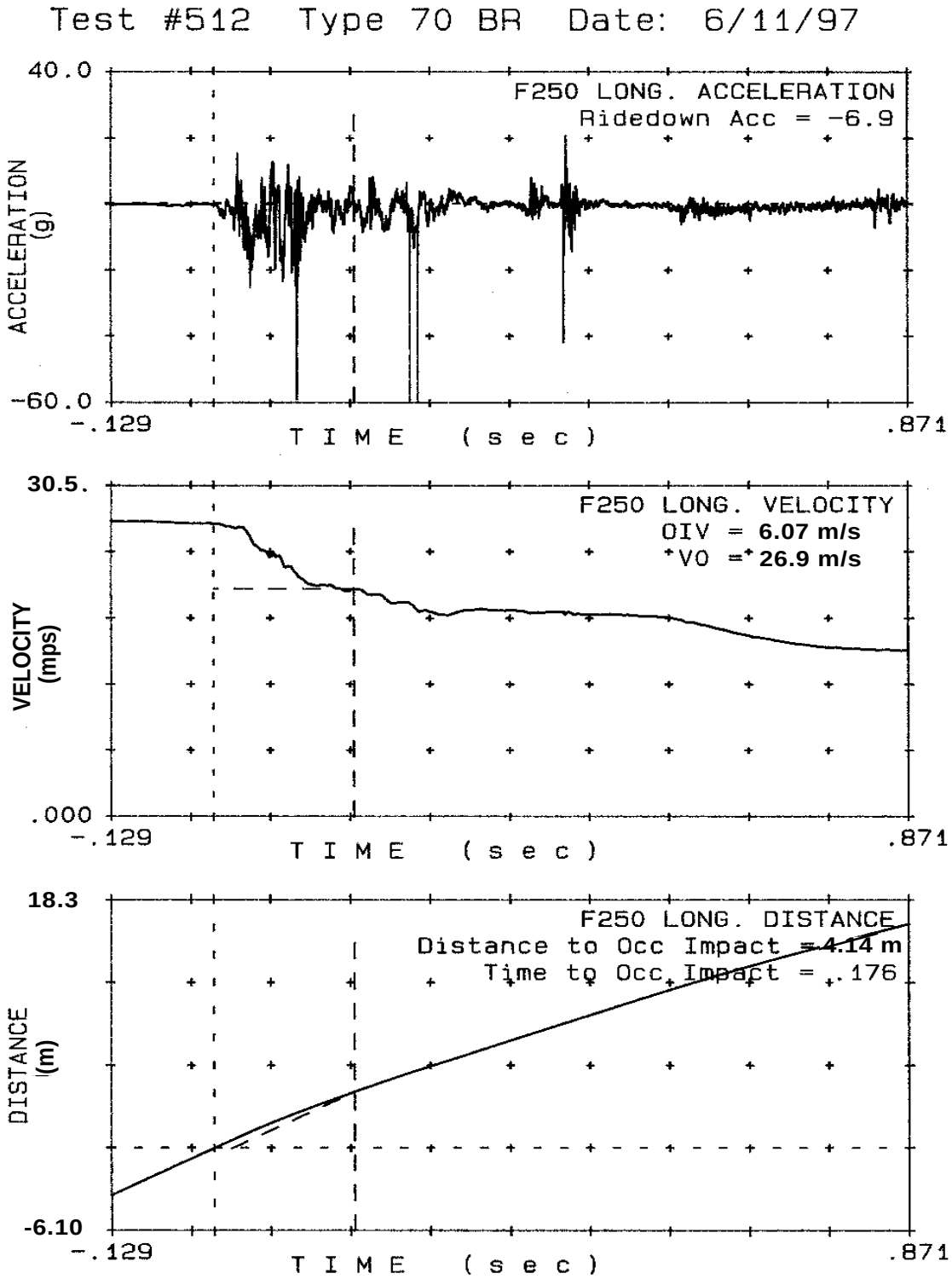

Figure 7.11 - Test 512 Vehicle Lateral Acceleration, Velocity and Distance -vs- Time

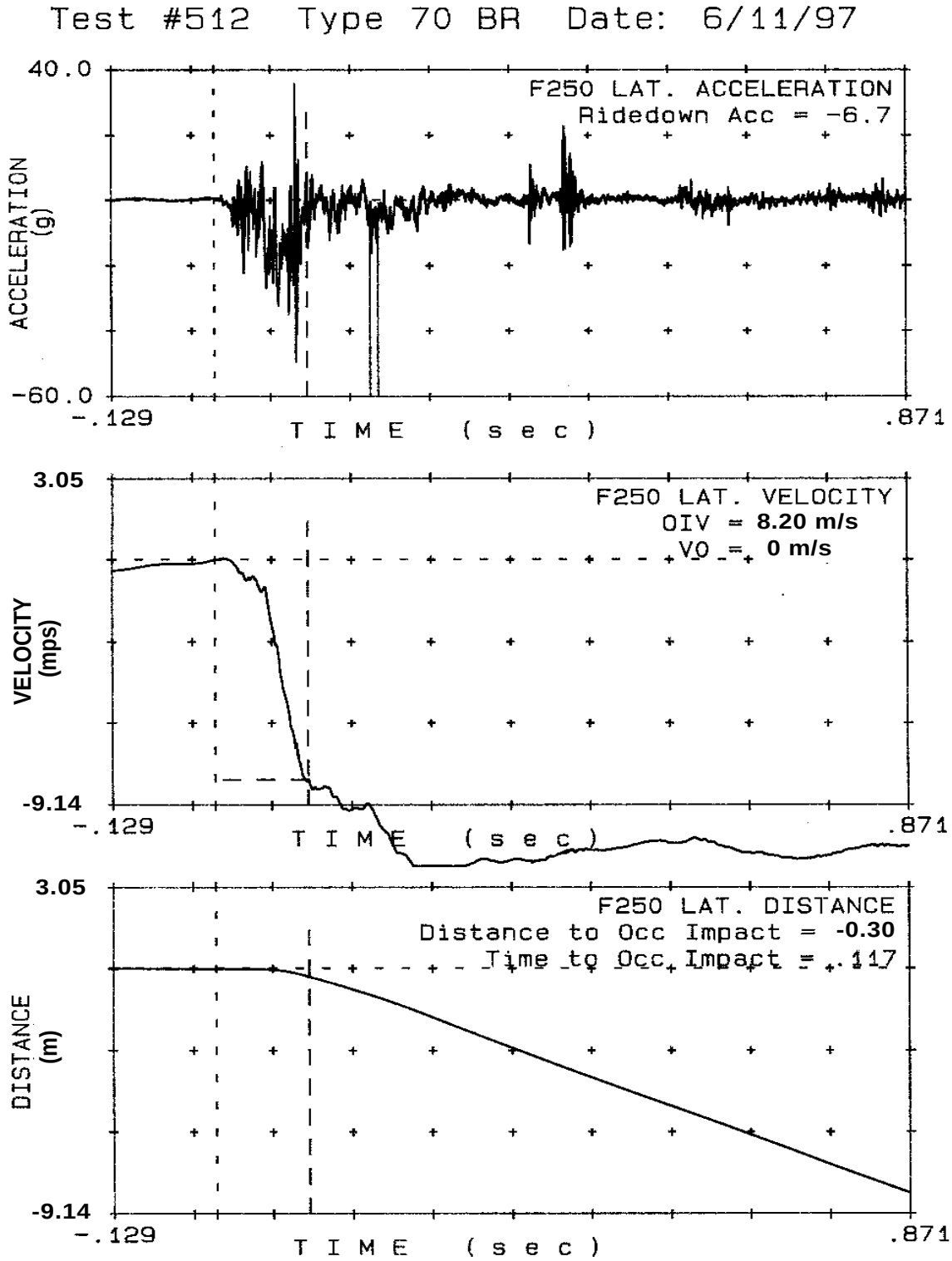

Figure 7.12 - Test 515 Vehicle Accelerations -vs- Time

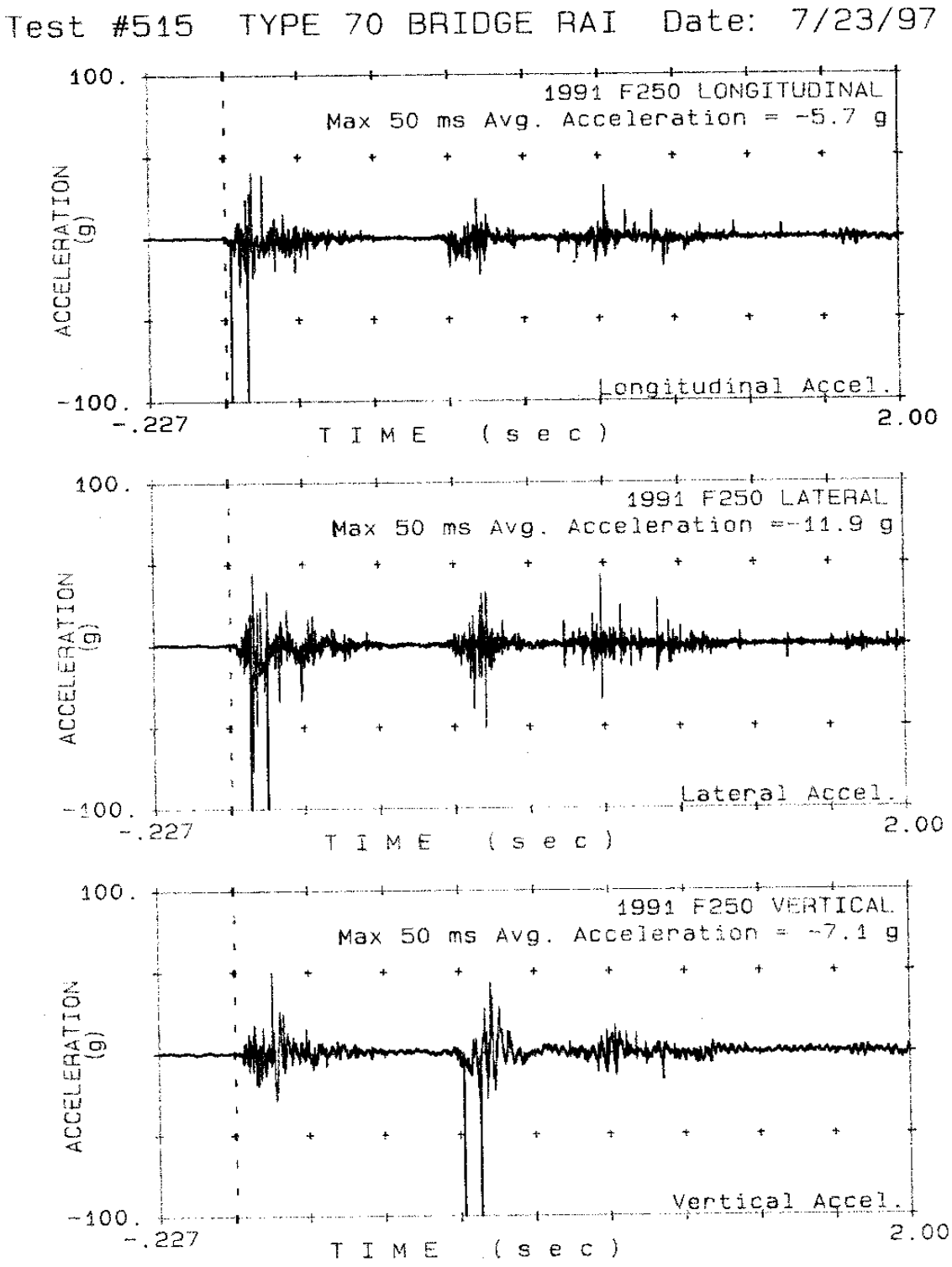

Figure 7.13 - Test 515 Vehicle Longitudinal Acceleration, Velocity and Distance -vs- Time

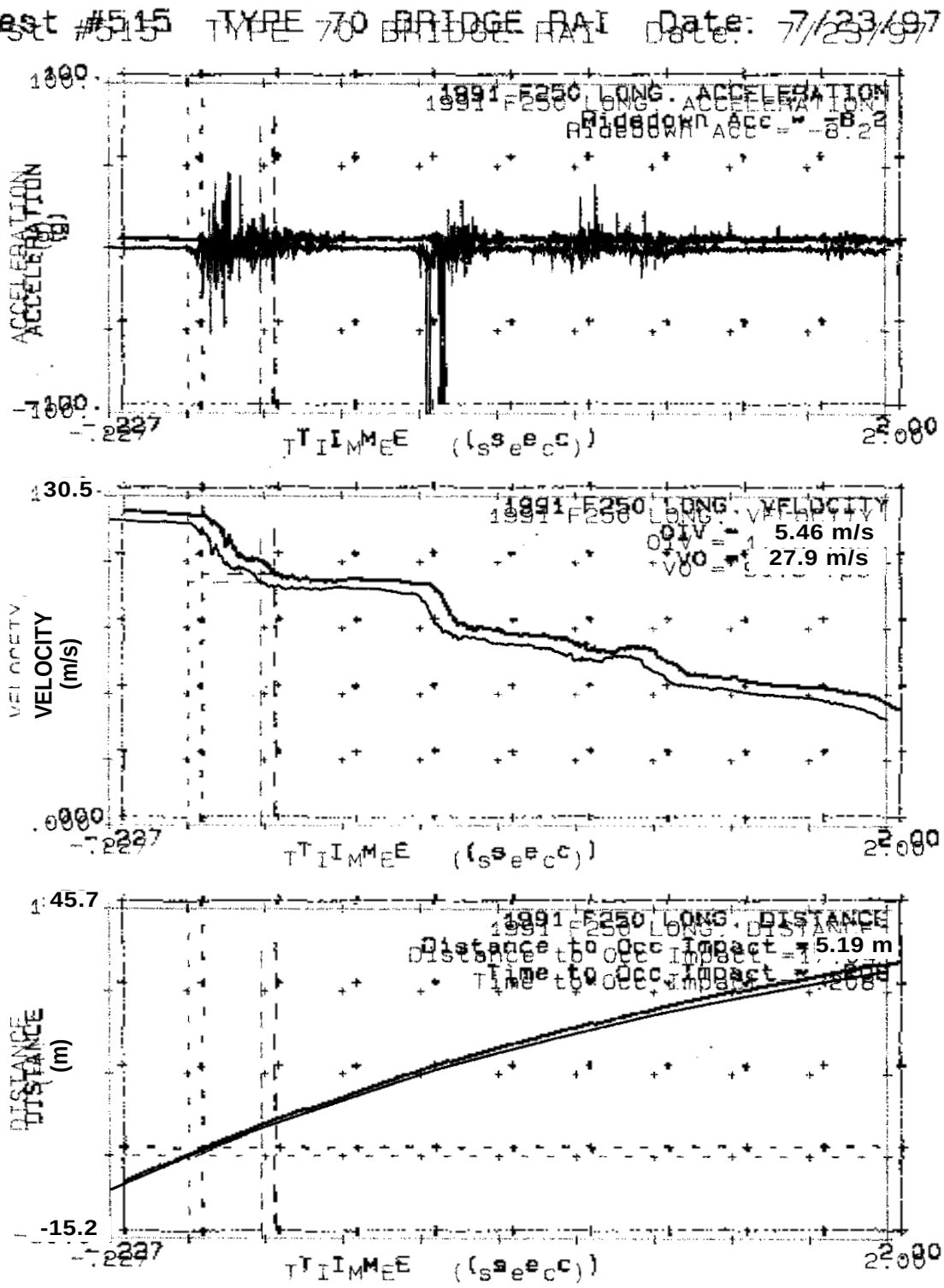

Figure 7.14 - Test 515 Vehicle Lateral Acceleration, Velocity and Distance -vs- Time

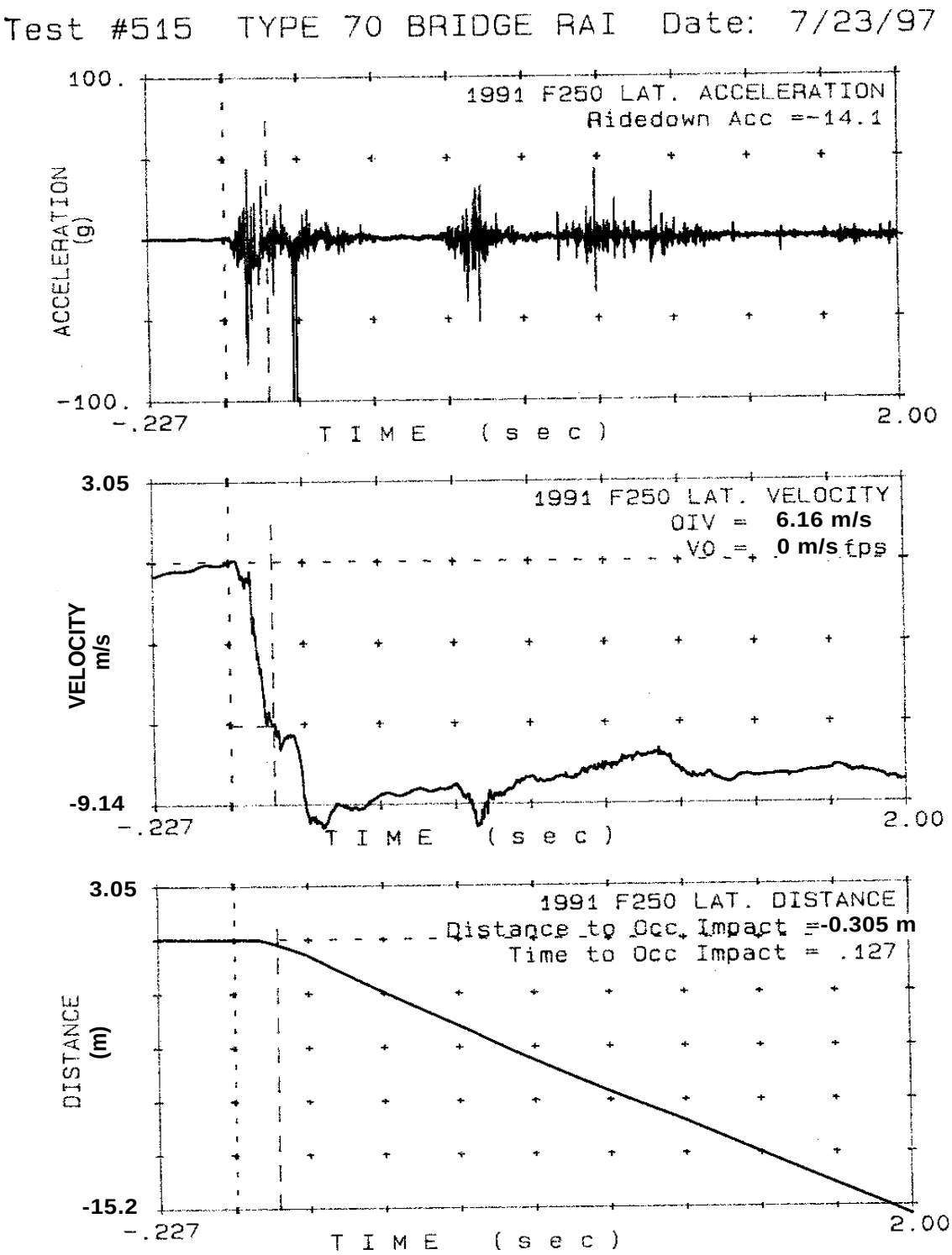

Figure 7.15 - Test 515 Vehicle Roll, Pitch and Yaw -vs- Time

Test #515 TYPE 70 BRIDGE RAI Date: 7/23/97

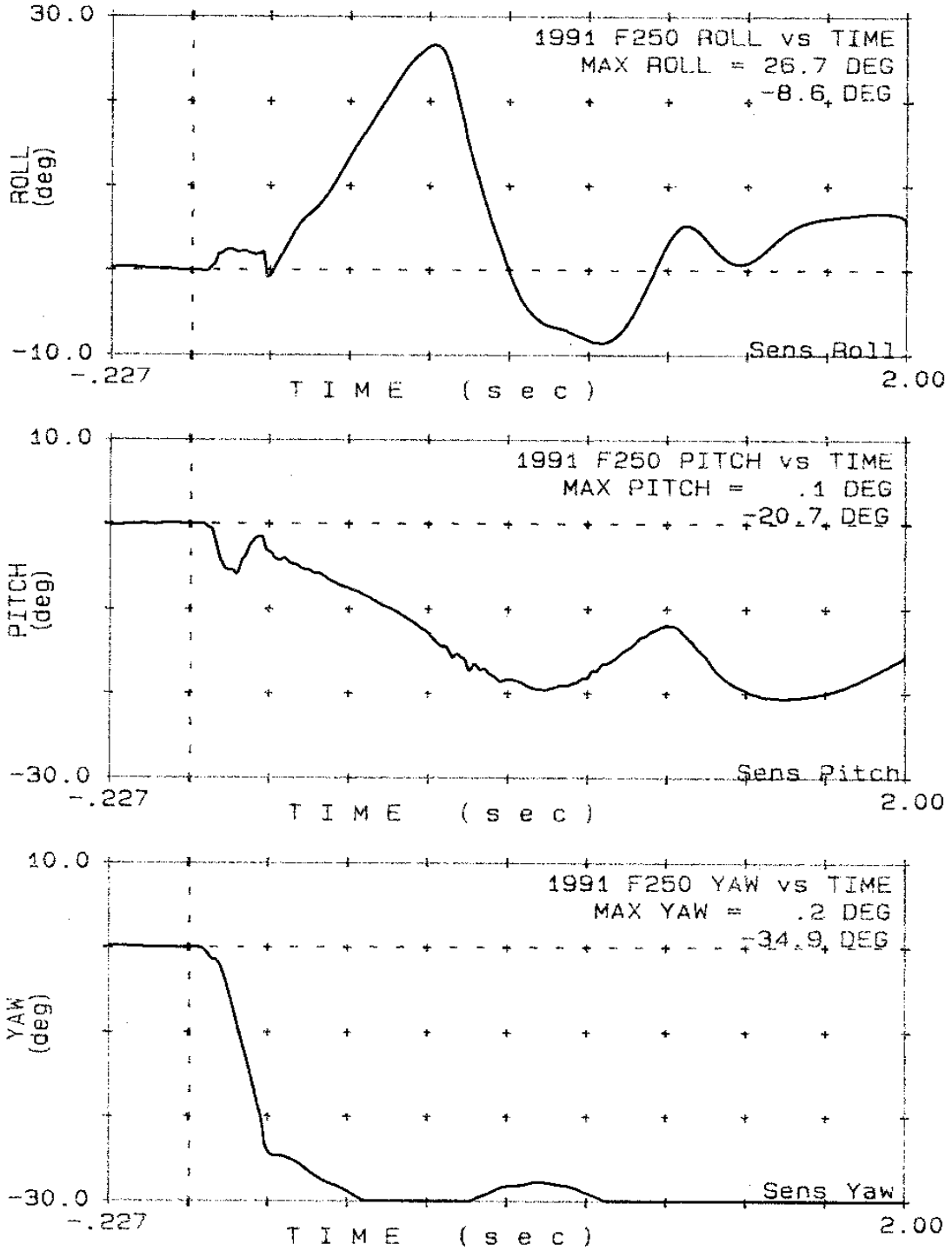

7.5. Detailed Drawing

(The following page contains a detailed drawing of the test article.)