RESEARCH NOTES
Traffic Operations Research
September 2006

# Development of an Integrated Microscopic Traffic Simulation and Signal Timing Optimization Tool

**RESULTS:** ***Caltrans Traffic Operations Research has completed an integrated micro-simulation and signal timing optimization tool that assists the Caltrans traffic operation staffs in optimizing, evaluating and refining signal timing plans for arterial traffic operation. The tool has three components: monitoring, retiming and on-line plan adjustment.***

## Why We Pursued This Research

A big segment of the traffic signal control systems in California are closed-loop systems. Because the wide scale deployment of advanced adaptive control systems may be many years away due to the associated high costs, there is a significant need to improve the effectiveness of current closed-loop systems. To address the need, two research directions among others can be adopted. One is to enhance the capability of developing efficient signal timing plans and the other is to enable the state-of-the-practice closed-loop systems to operate in a more traffic-adaptive manner. A fully-integrated micro-simulation and signal timing optimization tool that can efficiently predict traffic condition and optimize signal timing strategies in a cohesive manner will help traffic engineers develop efficient signal timing plans. Paramics is a scalable high-performance microscopic traffic simulation package that has been widely used in Caltrans for years. However, like most simulation tools, it is not designed for traffic operation and thus lacks signal timing optimization capability. Integrating Paramics with a timing optimization program will provide a powerful tool for traffic signal operation. The timing plans can be evaluated and fine-tuned before being implemented in the field. Moreover, the tool can be used for further analyses to study how to develop efficient timing plans. The advancement and deployment of telecommunication and ITS technologies make real-time (true) traffic and signal status data more readily available. These real-time data provide opportunities to allow closed-loop control systems to operate more adaptively to changes of traffic demands and patterns in both strategic and tactic levels. A large set of archived real-time data will allow traffic engineers to produce a timely and efficient signal timing solution, which makes signal controls to be more adaptive in a strategic level. At the same time, with using real-time traffic and signal status data, online adjustments of the active timing plan will enable actuated controls to respond in a near real-time manner to traffic changes, in other words, to be more adaptive in a tactic level. The above approaches can be evaluated by using the integrated tool to be developed as shown on Figure 1.

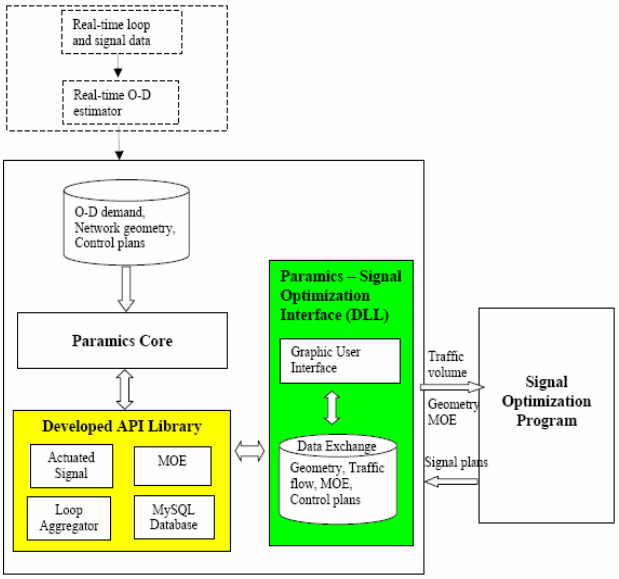


Figure 1 Framework of Integrated Simulation and Optimization Tool

## What We Did

Integration

The integrated simulation and optimization tool consists of three major components, enhanced Paramics, Paramics-signal optimization interface and the signal optimization program. Capability enhancements of Paramics have been realized by the team through the development of some modules in Paramics API, including actuated signal controller API, loop data aggregator API, that emulates the real-world data collection at a certain time interval from induction loop detectors, MOE API that produces a predetermined set of performance indexes and MySQL database that is used for storing intermediate results during the simulation process.

Paramics-signal optimization interface will have two main modules: 1) a graphical user interface (GUI), that enable the users to run Paramics simulation and signal optimization, access the data of signal optimization, and handle other interfacing functions; 2) data

exchange master that involves a set of procedures to facilitate the data exchanges between the two programs as shown in Figure 1.

## Monitoring

A signal operation monitoring system has been created to enable traffic operation staffs to understand the historic and current performances of signal control operations and help them make the decision whether a retiming effort is needed or not. The physical architecture of the system is shown in Figure 2.

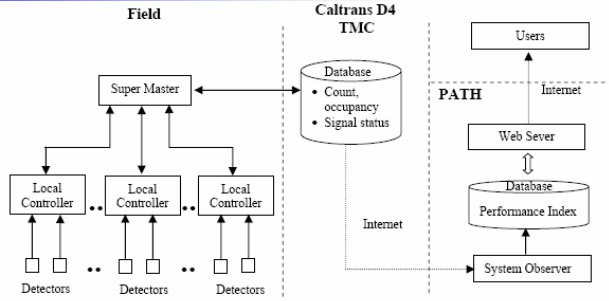


Figure 2 Physical Architecture of the Monitoring System

The TMC is physically located in the central computer in Caltrans District 4, where a QNX database is installed. The database receives inputs through wire connection with super master and local signal controllers in the field. The system observer module calculates a set of performance indexes and distributes them via web. The project team will develop a set of performance indexes that includes the following key parameters intended to measure the performance of actuated signal controls:

- Approach flows
- Pedestrian calls
- V/C ratios
- Phase durations
- Number and percentage of max-outs and force-offs with and without pedestrian respectively
- Number and percentage of gap-outs
- Approach delays/stop delays
- Detector failure
- Traffic progression efficiency
- Others

## Retiming

A timing development process for a retiming effort in the context of Time of Day (TOD) controls, making use of archived real-time traffic data. We do not intend to develop a new signal optimization model, but rather to optimally determine TOD intervals in which timing plans are developed to control signals and the corresponding representative traffic volumes for the intervals. The timing plan that operates within each interval will be determined by using the selected signal optimization program as illustrated on Figure 3.

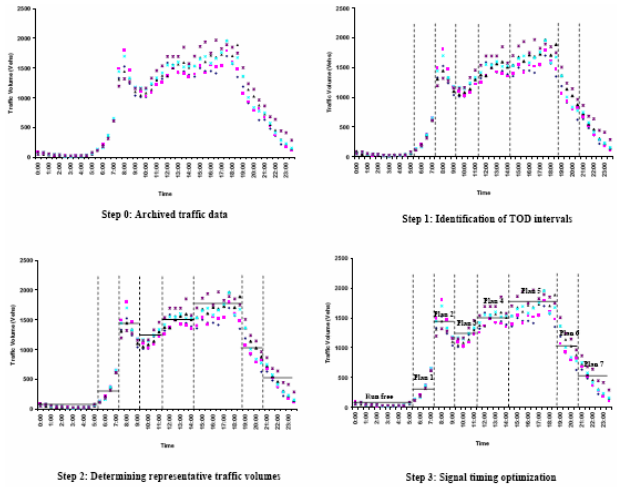


Figure 3 The Timing Development Process

## On-Line Plan refiner

For actuated traffic controls, we have developed an on-line plan refiner to marginally adjust certain parameters of the active timing plan, such as added initials and minimal gap, to allow actuated controls to more adaptively respond to the changes in traffic demands and patterns while maintaining the coordination. The capability of the on-line refiner is dependent on the underlying mechanism for communicating timing parameters to controllers. In the closed-loop systems deployed in Caltrans District 4, the adjustment of control parameters can be achieved by changing the speed up rate of local controller timer.

### For More Information About This Research

Jerry Kwong
TMS Software Supports
(916) 654-8687
jkwong@dot.ca.gov

### For More Information On Other Traffic Operations Research Projects

| | | |
|---|---|---|
| Greg Larson | (916) 657-4369 | greg.larson@dot.ca.gov |
| Joe Palen | (916) 654-8420 | joe.palen@dot.ca.gov |
| Pete Hansra | (916) 654-7252 | pete.hansra@dot.ca.gov |
| Joel Retanan | (916) 654-8174 | jretanan@dot.ca.gov |
| Mandy Chu | (916) 654-7656 | mandy.chu@dot.ca.gov |
| Sean Campbell | (916) 654-8868 | sean.campbell@dot.ca.gov |
| Roy Rounds | (916) 654-6981 | roy.rounds@dot.ca.gov |