STATE OF CALIFORNIA DEPARTMENT OF TRANSPORTATION

TECHNICAL REPORT DOCUMENTATION PAGE

TR0003 (REV. 10/98)

1. REPORT NUMBER	2. GOVERNMENT ASSOCIATION NO.	3. RECIPIENT'S CATALOG NUMBER
CA10-1104		

4. TITLE AND SUBTITLE	5. REPORT DATE
Vegetation and Debris Control Methods for Maintenance-Friendly Roadside Design	June 30, 2010
	6. PERFORMING ORGANIZATION CODE AHMCT
7. AUTHOR(S) Sean Donohoe, Brandon Schauer, Wilderich White, Steven A. Velinsky	8. PERFORMING ORGANIZATION REPORT NO. UCD-ARR-10-06-30-02
9. PERFORMING ORGANIZATION NAME AND ADDRESS AHMCT Research Center UCD Dept of Mechanical & Aerospace Engineering One Shields Avenue Davis, California 95616-5294	10. WORK UNIT NUMBER
	11. CONTRACT OR GRANT NUMBER IA 65A0256
12. SPONSORING AGENCY AND ADDRESS California Department of Transportation Division of Research and Innovation 1227 O Street Sacramento, CA 94273-0001	13. TYPE OF REPORT AND PERIOD COVERED Final Report September 2007 – June 2010
	14. SPONSORING AGENCY CODE CALTRANS

15. SUPPLEMENTAL NOTES

16. ABSTRACT

This project sought to further the development of safer and more efficient roadside maintenance operations. The focus was on efforts to collect litter and debris and control vegetation on roadsides. A review and assessment of equipment and methods was performed followed by development and testing of conceptual vegetation cutting tools that allow workers to perform remote operations from within a truck. The review and assessment was achieved by performing a literature search which was compiled and distributed in a web based document titled the Vegetation and Debris Control Toolbox. This toolbox was designed to efficiently provide information to persons working in the field and those seeking to develop solutions. A method of grading the value of existing and potential alternatives was developed with the application of fuzzy logic. Equipment that allows operators to work remotely from within the protected confines of a truck cab is safer and more efficient. Vegetation cutting tools intended to be used with a vacuum truck known as the ARDVAC were further refined and tested. Two concept tools, a rotary cutter and a reciprocating cutter were tested on grasses and woody stemmed weeds. A third tool was fabricated and tested for use on tumble weeds. Use of a web based toolbox to communicate and seek input from roadside maintenance operations is strongly recommended. The graphical format demonstrated will allow users to use it efficiently. Testing of the tools has demonstrated the strengths and weaknesses of each concept. It is recommended that input from the experience of users of the ARDVAC be considered prior to further tool development.

.

17. KEY WORDS	18. DISTRIBUTION STATEMENT	
Roadside Maintenance; Maintenance equipment, web toolbox, vegetation cutter, tumbleweed, weed control	No restrictions. This document is available to the public through the National Technical Information Service, Springfield, Virginia 22161.	
19. SECURITY CLASSIFICATION (of this report)	20. NUMBER OF PAGES	21. PRICE
Unclassified	159	

Reproduction of completed page authorized

Copyright 2013, AHMCT Research Center, UC Davis

Advanced Highway Maintenance and Construction Technology Research Center

Department of Mechanical and Aerospace Engineering
University of California at Davis

Vegetation and Debris Control Methods for Maintenance-Friendly Roadside Design

Sean Donohoe, Brandon Schauer, Wilderich White &
Professor Steven A. Velinsky: Principal Investigator

Report Number: CA10-1104
AHMCT Research Report: UCD-ARR-10-06-30-02
Final Report of Contract: 65A0256

June 30, 2010

California Department of Transportation

Division of Research and Innovation – Maintenance Research, Project ID 184

Copyright 2013, AHMCT Research Center, UC Davis

Disclaimers

This document is disseminated in the interest of information exchange. The contents of this report reflect the views of the authors who are responsible for the facts and the accuracy of the data presented herein. The contents do not necessarily reflect the official views or policies of the STATE OF CALIFORNIA or the FEDERAL HIGHWAY ADMINISTRATION or the UNIVERSITY OF CALIFORNIA. This report does not constitute a standard, specification, or regulation. This report does not constitute an endorsement by the Department of any product described herein.

The United States Government does not endorse products or manufacturers. Trade and manufacturers' names appear in this report only because they are considered essential to the object of the document.

For individuals with sensory disabilities, this document is available in Braille, large print, audiocassette, or compact disk.

To obtain a copy of this document in one of these alternate formats, please contact: the Division of Research and Innovation, MS-83, California Department of Transportation, P.O. Box 942873, Sacramento, CA 94273-0001.

Copyright 2013, AHMCT Research Center, UC Davis

Copyright 2013, AHMCT Research Center, UC Davis

Abstract

This project sought to further the development of safer and more efficient roadside maintenance operations. The focus was on efforts to collect litter and debris and control vegetation on roadsides. A review and assessment of equipment and methods was performed followed by development and testing of conceptual vegetation cutting tools that allow workers to perform remote operations from within a truck. The review and assessment was achieved by performing a literature search which was compiled and distributed in a web based document titled the Vegetation and Debris Control Toolbox. This toolbox was designed to efficiently provide information to persons working in the field and those seeking to develop solutions. A method of grading the value of existing and potential alternatives was developed with the application of fuzzy logic. Equipment that allows operators to work remotely from within the protected confines of a truck cab is safer and more efficient. Vegetation cutting tools intended to be used with a vacuum truck known as the ARDVAC were further refined and tested. Two concept tools, a rotary cutter and a reciprocating cutter were tested on grasses and woody stemmed weeds. A third tool was fabricated and tested for use on tumble weeds. Use of a web based toolbox to communicate and seek input from roadside maintenance operations is strongly recommended. The graphical format demonstrated will allow users to use it efficiently. Testing of the tools has demonstrated the strengths and weaknesses of each concept. It is recommended that input from the experience of users of the ARDVAC be considered prior to further tool development.

Copyright 2013, AHMCT Research Center, UC Davis

Executive Summary

This project objective was to further the development of safer and more efficient roadside maintenance operations. The focus was on maintenance efforts to collect litter and debris and control vegetation on roadsides. In the initial phase of the project, the maintenance equipment and methods were reviewed and assessed. This was achieved by performing a literature search, internet search and patent search. The resulting information was compiled and shared in a web based document titled the Vegetation and Debris Control Toolbox. The information in the toolbox described present day equipment and methods. It also included concepts of equipment that could be implemented in the future with appropriate development efforts. This toolbox was designed to efficiently provide the information to persons working in the field and those involved in developing solutions through research and development. A method of grading the value of existing and potential alternatives was developed with the application of fuzzy logic. Examples of the grading process were provided to show valuations based on safety, environmental impacts, cost and other factors. Maintenance of a web based toolbox, such as the one developed in this project, is considered important to the process of developing ideas that can lead to improvements in equipment and operations. Use of a graphic intensive toolbox is strongly recommended. By presenting and using a grading system to assign values, the basis for selecting ideas for further development is better understood.

Equipment that allows highway workers to perform operations remotely from within the protected confines of a truck cab is safer and potentially more cost effective. The AHMCT Research Center has developed various machines based on this idea. Prior development efforts resulted in a machine known as the ARDVAC which was designed to allow remotely controlled litter collection using a vacuum truck system. Tools intended to be used with the ARDVAC were developed to allow vegetation cutting and collecting while collecting litter. In this project, two concept tools, a rotary cutter and a reciprocating cutter were tested on grasses and woody stemmed weeds. A third tool was assembled and tested for use on tumble weeds. Testing of the tools has demonstrated the strengths and weaknesses of each concept. Caltrans has begun operations of pre-production versions of the ARDVAC. It is recommended that these vegetation cutting

Copyright 2013, AHMCT Research Center, UC Davis

tool concepts be considered for further development once operations with the ARDVAC have provided needed user experience.

Copyright 2013, AHMCT Research Center, UC Davis

Table of Contents

Disclaimers i
Abstract iii
Executive Summary iv
Table of Contents vi
List of Tables viii
List of Figures ix
Acknowledgement xi
CHAPTER 1: INTRODUCTION 1
1.1 Background 1
1.2 Vegetation Maintenance Considerations 3
1.3 Particularly Troublesome Vegetation 4
1.4 Debris Prevention and Cleanup 6
1.5 Common Debris Problems 8
1.6 Introduction to the Online Toolbox 8
1.7 Chapter Summary 10
1.8 Introduction of Report Content 11
CHAPTER 2: EQUIPMENT PLACED IN THE TOOLBOX 13
2.1 Chapter Summary 13
2.2 Introduction 13
2.3 Summary of Vegetation Control Equipment in Toolbox 13
2.3.1 Mowers 14
2.3.2 Herbicides 18
2.3.3 Hot Steam 19
2.3.4 Hydro-Mechanical Obliteration 20
2.3.5 Heat and Flames 21
2.4 Summary of Debris Control Equipment in Toolbox 23
2.4.1 Vacuum Type 23
2.4.2 Raking Type 24
2.4.3 Robotic Arm Type 26
2.5 Conclusion 28
CHAPTER 3: WEB BASED TOOLBOX 29
3.1 Chapter Summary 29
3.2 Introduction 29
3.3 Project Goals 30
3.4 Project Stakeholders and Their Requirements 31
3.5 Structure and Organization 33
3.6 Equipment Scoring Rational 39
3.6.1 Fuzzy Logic 40
3.6.2 Fuzzy Logic Applied to the Toolbox 44
3.7 Equipment Scoring Procedure 49
3.7.1 Vegetation Equipment Scores 53
3.7.2 Debris Equipment Scores 58
3.8 Using the Toolbox 61
3.9 Conclusion 61
CHAPTER 4: VEHICLE BASED LITTER AND DEBRIS REMOVAL 63

Copyright 2013, AHMCT Research Center, UC Davis

4.1 ARDVAC ... 63
4.1.1 Other Vehicle Based Debris Removal Methods ... 64
4.2 Expanding ARDVAC Abilities ... 66
4.3 Current Vegetation Control Standards ... 67
4.3.1 Herbicide Reduction Mandate ... 69
4.4 ARDVAC Vegetation Attachments ... 69
4.4.1 Rotary Cutter ... 70
4.4.2 Oscillating Cutter ... 71
4.4.3 Tumbleweed Shredder ... 72
4.5 Conclusion ... 73
CHAPTER 5: TEST FIXTURING AND PREPARATION ... 75
5.1 Chapter Summary ... 75
5.2 Test System Overview ... 75
5.2.1 Support Structure Overview ... 76
5.2.2 Hydraulics System ... 78
5.2.3 Electrical System ... 79
5.3 Finishing the Attachments ... 80
5.4 Conclusion ... 84
CHAPTER 6: TESTING OF VEGETATION CUTTERS ... 85
6.1 Chapter Summary ... 85
6.2 Introduction ... 85
6.3 Estimation of Cutting Ability ... 85
6.4 Testing Method ... 92
6.5 Results ... 96
6.5.1 Rotary Cutter Testing Results ... 96
6.5.2 Oscillating Cutter Test Results ... 100
6.6 Rotary Cutter Shielding Considerations ... 108
6.7 Conclusion ... 109
CHAPTER 7: ARDVAC TUMBLEWEED PROCESSOR ... 113
7.1 Chapter Summary ... 113
7.2 Introduction ... 113
7.3 Introduction to the Tumbleweed Processor ... 114
7.4 Part Optimization ... 116
7.5 High Performance Cutter Head ... 124
7.6 HPCH System Analysis ... 127
7.7 Tumbleweed Processor Testing Results ... 133
7.8 Conclusion ... 134
CHAPTER 8: SUMMARY AND CONCLUSIONS ... 135
REFERENCES ... 137
APPENDIX A Tree-of-Heaven Properties and Species Comparison Tables ... 141
APPENDIX B Rotary Cutter KE Calculations and Mass Properties ... 143

Copyright 2013, AHMCT Research Center, UC Davis

List of Tables

Table 1-1: Taken from the Caltrans Roadside Toolbox [7] 3
Table 3-1: Stakeholder Goals 32
Table 3-2: Toolbox Vegetation Scoring Matrix 39
Table 3-3: Toolbox Debris Scoring Matrix 48
Table 3-4: Post Mower Sample Score 51
Table 3-5: Sample Raw Scores for Comparison Set 52
Table 3-6: Comparison Set High Scores Filled In 52
Table 3-7: Sample Normalized Relative Scores for Comparison Set 53
Table 3-8: Operation Cost of Various Equipment [9] 55
Table 3-9: Guardrails and Posts Vegetation Rankings 56
Table 3-10: Clearstrips, Roadsides, and Medians Vegetation Rankings 57
Table 3-11: Gore and Hardscapes Vegetation Rankings 57
Table 3-12: Guardrails and Posts Debris Rankings 58
Table 3-13: Clearstrip, Roadside, and Median Debris Rankings 59
Table 3-14: Gore and Hardscape Debris Rankings 60
Table 6-1: Dynamic Model Variables 89
Table 6-2: KE per Blade Strike Needed for Failure 90
Table 6-3: Cutter Testing Events 95
Table 7-1: Thin Disk Parameters 130

Copyright 2013, AHMCT Research Center, UC Davis

List of Figures

Figure 1-1 Fire strip Treated With Herbicides [9] 4
Figure 1-2 Tumbleweed Caught on Fence 5
Figure 1-3 Yellow Starthistle 6
Figure 1-4 Trash on the Roadside 7
Figure 1-5 Structure of Toolbox for Vegetation and Debris Control 10
Figure 2-1 Tow Type Flail Lawn Mower [15] 15
Figure 2-2 Mower Mounted on Boom Arm [16] 15
Figure 2-3 Evatech Hybrid RCLM2008 RC Lawn Mower [17] 16
Figure 2-4 Wondering Type Autonomous Mower [20] 17
Figure 2-5 Fully Autonomous GPS Enabled Mower Platform [21] 17
Figure 2-6 Herbicide Sprayer Truck [9] 19
Figure 2-7 Workers applying Hot Foam [27] 20
Figure 2-8 Water Jet in Action 21
Figure 2-9 Radiant Heat Attachment 22
Figure 2-10 The ARDVAC Truck [6] 24
Figure 2-11 Barber Litter Picker Being Towed 25
Figure 2-12 Schwarze Roadhawk Ready for Action 26
Figure 2-13 Debris Collection Vehicle [6] 27
Figure 2-14 Grapple Truck Lifting Old Fridge 28
Figure 3-1 Toolbox General Layout 34
Figure 3-2 Toolbox Comparison Table 36
Figure 3-3 Tool Class Specific Page 37
Figure 3-4 Equipment Graphical List 38
Figure 3-5 Coffee Temperature Ranges 41
Figure 3-6 Coffee Transition Areas 42
Figure 3-7 Complete Membership Functions 42
Figure 3-8 Coffee Between Regions 43
Figure 3-9 Coffee Output Functions 43
Figure 3-10 Coffee Centroid Calculation 44
Figure 3-11 Fuzzy Shape Functions 45
Figure 3-12 Fuzzy Output Functions 46
Figure 3-13 Input Selection 47
Figure 3-14 Fuzzy Centroid Calculation 47
Figure 3-15 Concept Scoring Process 50
Figure 3-16 Areal View of Typical Highway [32] 54
Figure 4-1 VACALL Vacuum Truck [41] 63
Figure 4-2 ARDVAC Evolution 64
Figure 4-3 Debris Removal Vehicle in action 65
Figure 4-4 Debris Removal Attachment and Clamshell Action 65
Figure 4-5 Rotary Impact Cutter 71
Figure 4-6 Oscillating Cutter 72
Figure 4-7 Tumbleweed Shredder - 1) Arms, 2) Housing, and 3) Cutter Assembly 73
Figure 5-1 Idealized Top View of Test Setup 76
Figure 5-2 ARDVAC Motion Axes 77
Figure 5-3 Completed Test Structure with ARDVAC 78

Copyright 2013, AHMCT Research Center, UC Davis

Figure 5-4 Finished Oscillating Cutter 81
Figure 5-5 Finished Rotary Cutter 82
Figure 5-6 HEAD Plate 83
Figure 5-7 New Tumbleweed Head Assembly with Part ARDPTH-21 84
Figure 6-1 Rotary Cutter Dynamic Model 88
Figure 6-2 Push Cart 93
Figure 6-3 Rye Grass Before with Skirt 97
Figure 6-4 Rye Grass After with Skirt 97
Figure 6-5 After-shot of cut Milk Thistle and Tree-of-Heaven 98
Figure 6-6 Tree-of-Heaven Test 98
Figure 6-7 Tumbleweed Before 99
Figure 6-8 Tumbleweed After 99
Figure 6-9 Failed Large Diameter Cut 100
Figure 6-10 Fixed Osc. Cutter, Rye Grass 101
Figure 6-11 Fixed Osc. Cutter, Milk Thistle 101
Figure 6-12 Fixed Osc. Cutter, Tree-of-Heaven 102
Figure 6-13 Fixed Osc. Cutter, Tree-of-Heaven, Simultaneous Impact 103
Figure 6-14 Fixed Osc. Cutter, Milk Thistle, Simultaneous Impact 103
Figure 6-15 Rotational Osc. Cutter, Rye Grass 104
Figure 6-16 Rotational Osc. Cutter, 0 deg., Milk Thistle 105
Figure 6-17 Rotational Osc. Cutter, 0 deg., Tree-of-Heaven 105
Figure 6-18 Rotational Osc. Cutter, 90 deg., Milk Thistle 106
Figure 6-19 Rotational Osc. Cutter, 90 deg., Tree-of-Heaven 107
Figure 7-1 ARDVAC SYSTEM [6] 114
Figure 7-2 Tumbleweed Processor 115
Figure 7-3 Reduction Pulley Assembly [35]. 116
Figure 7-4 Original Flywheels 117
Figure 7-5 Motor Flywheel Assembly Explode 118
Figure 7-6 Belt Coupling Assembly Explode 118
Figure 7-7 Composite Pulley Housing (Part # ARD-PTH-14A) 120
Figure 7-8 Belt Tensioning bracket (Part # ARD-PTH-16) 121
Figure 7-9 Belt Pulley and Arm Mount Pin 121
Figure 7-10 View of Arm Tabs (Part # ARD-ARM-17) 122
Figure 7-11 Arm Gear Drive 123
Figure 7-12 Cutter Exploded View 125
Figure 7-13 HPCH Flywheel (Part Number ARD-PTC-01A) 126
Figure 7-14 FEA Convergence 130
Figure 7-15 Paddle Belt [39] 133

Copyright 2013, AHMCT Research Center, UC Davis

Acknowledgement

This research was supported with SP&R II funding from Caltrans for the contract titled: “Identify and Implement Successful, Measurable, Maintenance-Friendly, and Safe Roadside Design Practices, Contract #65A0256.”

The research reported herein was performed as part of the Advanced Highway Maintenance and Construction Technology (AHMCT) Research Center, within the Department of Mechanical and Aerospace Engineering at the University of California, Davis and the Division of Research and Innovation at the California Department of Transportation. It is evolutionary and voluntary. It is a cooperative venture of local, state and federal governments and universities.

Copyright 2013, AHMCT Research Center, UC Davis

CHAPTER 1: INTRODUCTION

1.1 Background

The state of California has a vast and expansive system of highways totaling more than 16,600 miles in length [1] and right-of-ways totaling more than 230,000 acres [2]. This system of infrastructure makes it possible for people to commute to work and it supports California's economy (the sixth largest in the world) [3]. The roads are as diverse as the people who call California home; they run through deserts in the south, redwood forests in the north, mountains in the east, and all of them have to be maintained and kept clean. The California Department of Transportation (Caltrans) is the keeper of this vast system of state and federal highways, as well as right-of-ways within California. It is Caltrans' job to maintain all of these roads, including repairs, trash cleanup, and of course vegetation control.

Since 1924, 170 Caltrans employees have been killed while repairing and improving the roadways that Californians depend on, more than half of these were caused by errant drivers [4]. Caltrans is mandated to provide leadership to: "Enhance transportation services, improve safety, reduce energy and environmental impacts, and enhance the economic vitality of California." Caltrans' job is to constantly improve roadway quality, while decreasing costs, and that important task will require a multi-pronged approach to be achieved successfully [5].

Research, development, and implementation of new machinery are actions that can be employed to achieve Caltrans mandates. Technology can be employed to improve the roads while keeping workers safe, cutting down costs, and protecting the environment. The Caltrans Division of Research and Innovation (DRI) is responsible for ensuring that as much leading edge technology is employed as possible. [5] The AHMCT Research Center (AHMCT) is the result of a partnership between DRI and the University of California at Davis, and specializes in research projects, such as developing advanced vehicles, equipment, and software for Caltrans. AHMCT strives to keep Caltrans on the cutting edge of highway maintenance and construction technology through university research.

Copyright 2013, AHMCT Research Center, UC Davis

AHMCT has developed a variety of different automated equipment for maintenance tasks designed to prevent harm to people while increasing overall efficiency. Some of these items include the Automated Roadway Debris Vacuum (ARDVAC) [6], Cone Placement and Retrieval Vehicle [6], and the Longitudinal Crack Sealer [6].

This project objective is to further the development of safer and more efficient roadside maintenance operations. The focus is on efforts to collect litter and debris and control vegetation on roadsides. In the initial phase of the project, the maintenance equipment and methods are reviewed and assessed. This is achieved by performing a literature search, internet search and patent search. Results are compiled and shared in a web based document titled the Vegetation and Debris Control Toolbox. The information includes existing operations and concepts that may be implemented in the future. This toolbox is designed to efficiently provide information to persons working in the field and those seeking to develop solutions. Multiple entities work both collaboratively and independently to improve safety and efficiency. All of this equipment needs to be displayed in an easily accessible manner; the best equipment is useless if no one knows about it. A method needs to be devised that shows all possible equipment for any particular job, ergo, the "toolbox." There have been studies done in the past on various pieces of equipment, and there have been reviews done on sets of equipment, but a simple easy to access source of all the data generated does not exist. It would be of great benefit if past, present and future work is complied into one location and made available in such a way as to facilitate picking the correct equipment for the correct job. The toolbox for Vegetation and Debris Control aims to do exactly that.

Equipment that allows operators to work remotely from within the protected confines of a truck cab is safer and more efficient. In this project, vegetation cutting tools intended to be used with a vacuum truck known as the ARDVAC are refined and tested. Two concept tools, a rotary cutter and a reciprocating cutter are tested on grasses and woody stemmed weeds. Assembly of a third tool known as the tumbleweed processor is completed and it is then tested for use on tumble weeds.

Copyright 2013, AHMCT Research Center, UC Davis

1.2 Vegetation Maintenance Considerations

Vegetation maintenance is time consuming and never ending; there are always new weeds. The cyclic nature of this task makes costs add up quickly. Various weed control methods that have been used include: planting slow growing/low maintenance vegetation, planting native species, applying pre and post emergent herbicides, replacing planted areas with hardscapes (as seen in table 1-1), and even simply letting the weeds grow.

Table 1-1: Taken from the Caltrans Roadside Toolbox [7]

Hardscape Type	*Cost per yd^2*	*Estimated Lifespan [years]*
Patterned Concrete Pavement	$100-$125	15-20
Rock Blanket (Mortared Cobble)	$85-$120	15-20
Stamped Asphalt Concrete	$40-$55	8-10

Each solution has its advantages and disadvantages. Low maintenance native plants can be choked out by invasive and noxious species such as tumbleweeds and yellow Starthistle. Herbicides have a bad public perception and may be associated with health and environmental problems. Hardscapes are not as nice to look at as plants, are expensive to build, and have a limited lifespan. When a hardscape cracks, weeds will grow in and they will be even harder to remove. Weed control is required to reduce fire hazard, maintain line of sight, prevent pavement degradation, remove uncontrolled populations of invasive plants, remove collection points for trash and improve aesthetics.

Caltrans completed an environmental impact report in 1992. One of the key items in the report was related to the large use of herbicides [8]. After this report was released, Caltrans modified the integrated vegetation management (IVM) program. One of the goals of IVM is to reduce chemical (herbicide) usage by 50% in the year 2000 and 80% by the year 2012 [8]. There must be a viable alternative for areas that consume a lot of herbicide to achieve the planned reduction in herbicide usage. One alternative is better mechanical weed control employed in the fire strip.

Copyright 2013, AHMCT Research Center, UC Davis

Figure 1-1 Fire strip Treated With Herbicides [9]

The fire strip seen in Figure 1-1 is the area of land on the side of the roadbed, usually 1.2 to 2.4 meters (4 to 8 feet) wide that is kept clear of vegetation. Currently, maintenance of the fire strip consumes much of Caltrans herbicide allotment. In Caltrans district 3 for the 2004/2005 fiscal year 83.6% of all herbicides used for vegetation maintenance (C Family) were applied to fire strips [10]. It is logical to target this area to reduce herbicide use since that is where most herbicides are used. Reducing herbicide usage here would go a long way toward helping meet overall reduction goals. One way to decrease herbicide usage would be to eliminate the fire strip and let vegetation grow. However, eliminating the fire strip in is not an option; the fire strip is important for reducing the chance of fires, stopping plants from growing into the roadway (damaging the pavement), and keeping noxious weeds at bay. Some traditional and alternative methods will be compared in the toolbox for this kind of scenario.

1.3 Particularly Troublesome Vegetation

It is generally not practical to remove all unwanted vegetation all the time. There will always be weeds, but some types are worse than others. Two very troublesome plants will be highlighted here.

One plant which plagues many of California's roadways is "Salsola kali" also known as common tumbleweed. When thinking about tumbleweeds, most people immediately envision the characteristic lightweight brown ball that rolls along with the wind. The characteristic image of tumbleweeds portrayed in Hollywood movies seems harmless

Copyright 2013, AHMCT Research Center, UC Davis

enough but in reality they can be deadly under the right circumstances. When a tumble weed blows onto a road with busy traffic it will cause people to take evasive measures to avoid hitting it This may result in traffic incidents. What makes tumbleweeds so problematic is their ability to be carried by the wind for many miles from their origin. Simply keeping these plants away from roadsides is not enough. Roadside fences can help to keep tumbleweeds out of traffic by catching them before they enter the road as seen in Figure 1-2. The problem with this is that they will pile up along the fence eventually creating a huge pile of dry biomass that can easily ignite and burn. Tumbleweeds may also pile up high enough to actually jump over the fence.

Figure 1-2 Tumbleweed Caught on Fence

Tumbleweeds come in a large variety of sizes, in movies they always appear no bigger than a beach ball, but they can get quite large. When any tumbleweed gets on the roadway it must be removed. Currently the only real option for this is by hand. A machine that could speed up the process and keep workers off the roadway would be highly beneficial.

Yellow Starthistle, seen in Figure 1-3, is another type of weed which plagues California's roadsides. The California Invasive Plant Council (CalIPC) has placed this particular plant on its "A-1" list as an aggressive noxious species. This plant has a long history in California and it is clear from past trends that it is very aggressive. In 1958 Yellow Starthistle had invaded over 1 million acres of California, by 1985 it was estimated to have infested 8 million acres, and today it has reached roughly 15 million

Copyright 2013, AHMCT Research Center, UC Davis

acres (15% of California's 100 million acre landscape) [11]. This plant spreads easily over long distances with the help of humans.

Figure 1-3 Yellow Starthistle

Activities intended to limit or remove Yellow Starthistle sometimes have the opposite effect allowing it to spread even more. The seeds can easily attach themselves to the underside of heavy equipment and road maintenance vehicles and be carried from its origin point to a new area hundreds of kilometers away [11]. Another reason this plant is problematic is because it consumes a large amount of water drying out soil and depriving native grasses of much needed moisture for survival. Yellow Starthistle in the Sacramento River watershed region alone is estimated to cause an economic loss of up to $56 million per year in water usage [11].

1.4 Debris Prevention and Cleanup

Debris and trash on the roadways is a problem for motorists. No one wants to travel on a road that resembles a dump like Figure 1-4. Debris and trash on the road is not only unpleasant, a nuisance, and an eyesore, it can become a real safety hazard, and an environmental problem.

Copyright 2013, AHMCT Research Center, UC Davis

Figure 1-4 Trash on the Roadside

California uses an expansive and multi-faceted program to deal with trash and debris found on the roadways. The program contains both litter prevention, and litter removal aspects. On the prevention side of things, California runs an ad campaign against littering. The Department of Conservation distributes grants to Keep California Beautiful (KCB), and Keep America Beautiful (KAB) campaigns, and coordinates the April Keep California Beautiful month.

Despite prevention and education campaigns, littering still occurs on the roadsides both inadvertently and by carelessness. In the year 2006 Caltrans spent $55 million tax dollars on trash cleanup [12], this is a lot of money but it could be even higher. In an effort to keep costs from rising, California employs groups other than just Caltrans for this task. The California Department of Corrections and Rehabilitation assists the Department of Transportation (DOT) with crews of low level inmates, usually assigned to conservation camps, to pick up trash, and maintain vegetation for little to no cost [13]. Labor from the California Conservation Corps (CCC) is also used in these tasks. The Adopt-a-Highway (AAH) program allows residents to take pride in their homeland roads by keeping a section assigned to their group clean, and participants are rewarded with billboards that provide recognition. The California Costal Commission sponsors an annual costal cleanup day.

All of the above mentioned groups, agencies, and people need tools and equipment to get the job done. There is some mechanized equipment that can help, but most litter

Copyright 2013, AHMCT Research Center, UC Davis

retrieval is still done manually. First a work crew collects litter by hand and packages it into neat bags on the side of the road. Then a second work crew comes along to collect the bags with a truck. They drive slowly along the road edge and one person picks up the bags and throws them in the back of the truck. It is not hard to imagine that this process is slow, hazardous, and very limited. Workers have to worry about errant traffic, injury from manual labor, injury from potential biomedical waste (such as used hypodermic syringes), and hazardous materials that find their way onto the roadsides.

1.5 Common Debris Problems

The Caltrans district 11 litter program report from the year 2000 has some interesting data about the types and quantities of trash and debris most often found on the road. Surprisingly, mattresses are the single most common household item found discarded on the highway each month (roughly 50 per month) followed by 30 rugs, 20 ladders, and about a dozen refrigerators and stoves [14]. Large items such as refrigerators and stoves are extra troublesome. These large items generally cause major traffic problems, and require a Highway Patrol road closure with a Caltrans crew for removal.

Out of all the types of trash and debris on the highways and right of ways, old tires and parts of tires are second only to paper, bottles and cans. Paper, bottles, and cans are by far the most common trash items on the roadside. For these kinds of small trash items, manual labor is often used as described above thus exposing workers and personnel to hazardous traffic. Ironically, over half of all the various bottles and cans collected are from alcoholic beverages. Not too surprisingly, the busier and longer the highway the more trash that it seems to collect, Interstate 5 is the most trashed highway in Caltrans district 11, Interstate 15 is the second [14].

1.6 Introduction to the Online Toolbox

The Toolbox for Vegetation and Debris Control is designed to help improve efficiency when fighting Vegetation and Debris problems as outlined in previous sections. The basic idea of an online toolbox is not new, in some ways the internet itself is one large toolbox of information. The problem with the internet is that it is hard to locate desired information. A more specific toolbox dedicated to a certain task or group of tasks is required to improve efficiency.

Copyright 2013, AHMCT Research Center, UC Davis

Some specific types of toolboxes have been created for various tasks in the past. Caltrans maintains the Roadside Management Toolbox as part of its landscape architecture program [7]. That toolbox contains roadside design guidelines and is based on both images and text. The images in the Roadside Management Toolbox are mostly designed to supplement the text portions. AHMCT also has a toolbox on their web page called the Toolbox for Work Zone Barriers that allows a user to quickly compare different types of barriers that have previously been approved by Caltrans [6]. The work zone barrier toolbox is mostly text driven with a lot of information in tables and some user selectable comparison charts. There are few images in that toolbox.

The Toolbox for Vegetation and Debris Control takes images to a new level and navigates primarily with images and icons, using text based navigation as a backup. The toolbox is laid out in a tree type structure as seen below in Figure 1-5.

Copyright 2013, AHMCT Research Center, UC Davis

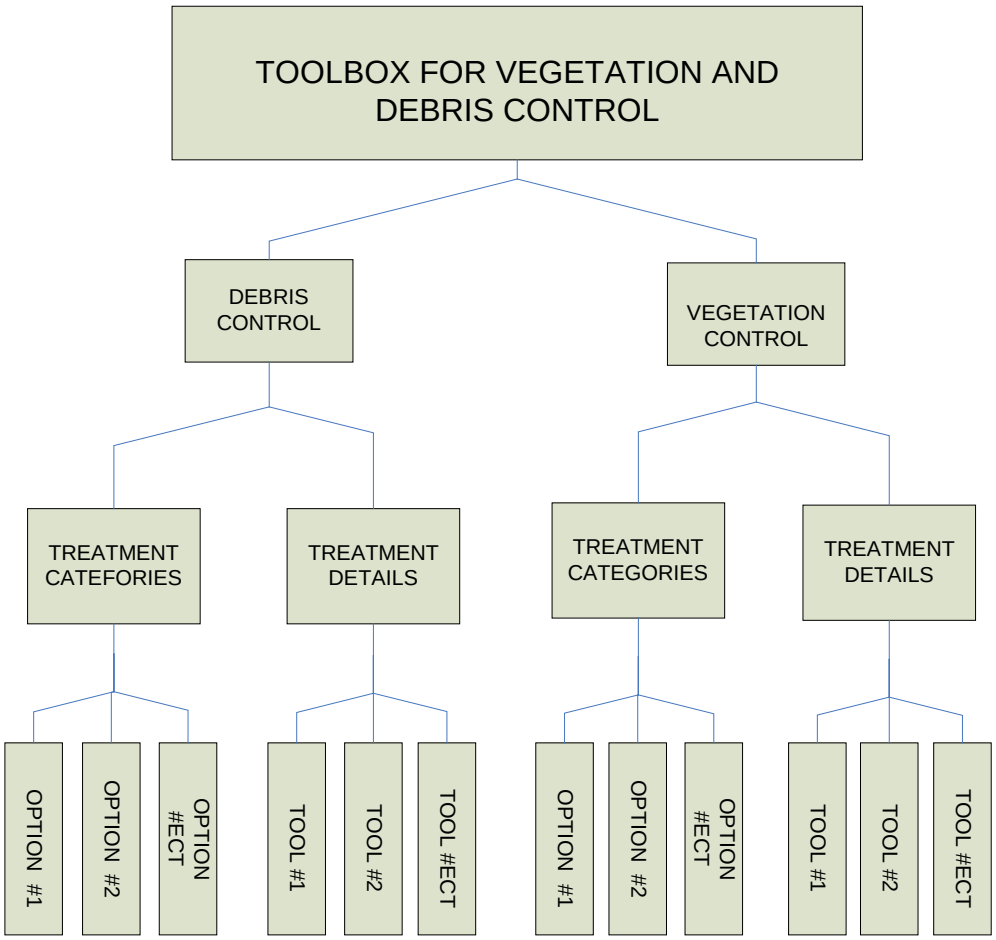

Figure 1-5 Structure of Toolbox for Vegetation and Debris Control

The Toolbox for Vegetation and Debris Control is totally internet based and operated by simply clicking on pictures representative of real world scenarios. Each type of tool is rated, under treatment categories, based on a number of criteria and shown as a possible option in a comparison matrix. This structure is designed to be easily accessible and updated in the future.

1.7 Chapter Summary

California is a large state with a vast diversity of roadways and corresponding roadway maintenance challenges. Caltrans, the government agency in charge of the roads, has to overcome those challenges in order to keep the roads serviceable. There are many threats to the roadways encompassing things like invasive and noxious weeds, dry flammable brush, man- made litter, and large household appliances dumped on the roadways. These

Copyright 2013, AHMCT Research Center, UC Davis

things, if left alone, would quickly cripple California's highway system and damage the economy.

The field of debris and vegetation control is diverse and complicated. Its varied nature causes people to want to stick with what they know best, control based on large amounts of manual labor. Manual labor is slow, inefficient, expensive (unless volunteers or inmate crews are utilized) and hazardous. The online toolbox is a first step. It allows people to easily see what equipment is currently available and where it may be easily applied. However, there still are areas in need. There are situations that do not have any equipment to help. Current technology must be utilized in order to advance the goal of safety and efficiency, and to ensure future improvements in new technologies, new tools, and new ideas. More automated and mechanized equipment would likely improve the lives of Caltrans employees, and California residents.

Some key areas that would benefit from new equipment include vegetation maintenance without herbicides, trash collection without exposing people to traffic, and finally collection and disposal of tumbleweeds.

In this chapter a brief summary on the current state of vegetation control was given. Two particularly troublesome types of plants were identified, the tumbleweed and the Yellow Starthistle. A brief summary of the state of debris control was given as well as some common types of debris and litter found on the roads. Finally, the idea of an online toolbox for vegetation and debris control was introduced.

1.8 Introduction of Report Content

The focus of this report will be to organize, assess, and develop machines and tools related to vegetation, and debris control. It will build on previous research done on various tools as well as new research in areas lacking data. Finally, some new equipment will be introduced and tested.

Chapter 2 will be a brief overview of the current state of equipment available for vegetation and debris control. The various pieces of equipment will be placed into broad categories which will later form the basis of the toolbox. Chapter 3 will introduce the online toolbox. This chapter will go into how the toolbox was developed, and how it will

Copyright 2013, AHMCT Research Center, UC Davis

be used in the future. It will also show how the toolbox was used to identify some scenarios where there are no current machines or tools that can be used to complete the various tasks safely and efficiently. Chapter 4 describes the ARDVAC and other truck based litter collection equipment. Chapter 5 through 7 describe the testing of the ARDVAC vegetation cutting tools. A rotary cutter and a reciprocating cutter are tested on grasses and woody stemmed weeds. Assembly of a third tool known as the tumbleweed processor is completed and it is then tested for use on tumble weeds. A brief summary is provided in Chapter 8.

Copyright 2013, AHMCT Research Center, UC Davis

CHAPTER 2: EQUIPMENT PLACED IN THE TOOLBOX

2.1 Chapter Summary

This chapter introduces some of the major types of equipment that are included in the toolbox. It is split into two parts, the first part contains the debris control equipment, and the second part contains the vegetation control equipment. Equipment is broken down into classes of operations rather than specific brands or models, this type of organization will be used throughout the toolbox.

2.2 Introduction

Before the toolbox could be created background research was required, this prerequisite to all other work was intended to discover what equipment actually exists and can be purchased. To this end a search was done looking specifically for equipment designed for vegetation control. In order to be sure that a representative assortment of equipment was found, a multi faceted approach was used. First a literature review was performed, to look for items pertaining to the field of vegetation control equipment. An internet search was conducted to gather more details about the types of equipment found in the literature review. The internet search was primarily aimed at known venders and manufactures of machines in the field. A search was then done using the US Patent Office database looking for both new equipment patents as well as patents on known commercial devices. Finally, a second internet search was completed using more broad, generalized, or generic terms such as “slope mower,” or “hot steam vegetation.”

2.3 Summary of Vegetation Control Equipment in Toolbox

There is a lot of equipment in the field of vegetation control and it would be impractical to list every model from every manufacturer. Equipment will be grouped into classes of operation. Rather than list 20 different tractor towed flail mowers each with its own unique features, there will be just one generic class titled towed flail mowers. It is assumed that within each class of equipment the tools all act in a similar manner. The classes of equipment include: various types of mechanical mowing, herbicides/chemical, various types of steam, hydro-mechanical, and various types of heat. Each class of

Copyright 2013, AHMCT Research Center, UC Davis

equipment has advantages and disadvantages. A short summary will be given here of the different types.

2.3.1 Mowers

Many people are familiar with the mechanical mowing method of vegetation control. This is an important tool in the arsenal against vegetation and it encompasses many specialized sub categories. This method of control uses a blade, hammer, or whip traveling at high speeds which mechanically cuts or pulverizes any soft or woody material with which it comes into contact. Mowing roadsides and medians is effective at improving visibility, controlling weeds, and even reducing fire danger. While a freshly mowed area has less vegetation to burn, the actual act of mowing introduces risk of fire due to sparks generated when the cutting parts of the machine come into contact with a solid object like a rock. Mowers, depending on the type, can be very effective against thick woody plants and tall grasses, but usually are limited to relatively flat areas, although there are some specialized slope mowers. There are some problems encountered when trying to use a relatively large machine to mow around guardrails and posts that are often encountered on roadsides; this requires a specialized type of mechanical mower.

There are many types of mechanical mowers, and all are suited to different needs and wants. Some examples include the push type such as a reel mower, the powered push type often used for home maintenance, various sizes of the ride on tractor type, tow behind, mounted on an arm, radio controlled (good for slopes), or even totally autonomous. Of these many types of mowers, there are a few interesting variations in order of increasing complexity.

Tractor driven and tow behind mowers such as the one seen in Figure 2-1 have been used in agricultural situations for years and they are still a very important device for large open fields. This type of mower can often be seen in use on roadsides by Caltrans and other Departments of Transportation (DOT) all across the USA. They are relatively cheap, quick, and well known technology. It is not hard to imagine that they are limited to wide open areas where a tractor can be easily driven.

Copyright 2013, AHMCT Research Center, UC Davis

Figure 2-1 Tow Type Flail Lawn Mower [15]

The arm mounted type of mower depicted in Figure 2-2 is often used. This type of mower is often attached to an arm on a tractor and is more versatile than the simple tow behind mowers encountered above. These mowers come in many varieties. Some are designed to specialize in reaching up to cut along steep banks and some are designed to be flexible and allow mowing around poles and guard rails. This type of mower can be seen on roadsides frequently.

Figure 2-2 Mower Mounted on Boom Arm [16]

The next type of mower, in order of complexity, is the radio controlled variety. One model of radio controlled mower can be seen in Figure 2-3. The idea of a radio controlled lawn mower dates back to at least 1948. The first known working mower of this type was a modified reel mower made by Jim Walker, owner and founder of

Copyright 2013, AHMCT Research Center, UC Davis

American Junior Aircraft Company [18]. This reel type mower had a large rabbit ear style antenna on top as well as supporting electronics. The controller was a type of joystick with a similar rabbit ear antenna attached.

Figure 2-3 Evatech Hybrid RCLM2008 RC Lawn Mower [17]

Jim Walkers mower was very popular as a show gimmick at the time, but was never sold as a real commercial item [18]. For a short period of time there was also a tethered remote controlled reel type lawn mower marketed for sale [19]. Today, there are a few radio controlled lawn mower devices on the commercial market. Modern radio controlled lawn mowers are often seen marketed as slope mowers. This makes a lot of sense because a human operator is not needed to climb the slope with the mower, which is a safety risk inherent in mowing steep slopes.

A logical step up from the radio controlled mower system is the wandering type or autonomous robot as seen in Figure 2-4. This type of robot uses a fixed algorithm that dictates its reaction to obstacles encountered while mowing, the algorithm may be as simple as turn right 90 degrees and go straight. The user must set up a perimeter that the mower will stay in, usually a wire buried underground. The robot will never cross the perimeter setup by the user. This type of mower usually is electric and operates totally autonomously. Some autonomous models can return to their home charging station when their battery is low. These mowers may include more advanced functions such as sensors that stop the mower if a human touches it and theft deterrent systems [20]. These devices

Copyright 2013, AHMCT Research Center, UC Davis

work in small fixed areas such as a home user's lawn but due to their low speed and limited range they are probably not well suited for large areas. The main limitation, however, is the mowers buried wire perimeter. Setting up this perimeter over a large area would be time consuming and could be costly.

Figure 2-4 Wondering Type Autonomous Mower [20]

Building upon the wandering type of autonomous lawn mower is the GPS enabled path planning type which is currently under development. A prototype platform for this kind of mower system can be seen in Figure 2-5. This type of mower has the ability to track its own position with a high degree of accuracy based on a GPS system. It often includes extra sensors, such as ultrasonic range finders and 3D mapping lasers, in order to avoid obstacles. The beauty of this class of device is that it requires no physical boundary to be setup, the user need simply to program the boundary into the software [21].

Figure 2-5 Fully Autonomous GPS Enabled Mower Platform [21]

Copyright 2013, AHMCT Research Center, UC Davis

These types of mowers are more complex than the wandering type and so they will probably be more expensive as they become available to the general public. At this point in time there are no known commercial versions of this product available.

2.3.2 Herbicides

Herbicides, a subset of pesticides, are the next broad category of vegetation control types. This category of control methods is very effective and relatively cheap. Herbicides, unlike mowing, are chemicals designed to attack and kill plants. These chemicals also inhibit future plant growth, and for this reason, they do not have to be repeated nearly as often as mechanical mowing. Similar to mowing, herbicides come in many sub-varieties; some are selective and only affect certain types of plants, while others are non-selective, and attack all types of vegetation.

Pesticides were once used much more freely, but have recently been criticized for their adverse environmental and health effects. Regulations pertaining to pesticides use are becoming more numerous and pesticide use, in general, is getting much more complicated. Pesticide selection in rights of way can be very tricky when a route has many sensitive areas such as habitat for endangered species, production agricultural settings, school bus stops, ground water protection areas, and more.

Caltrans uses pesticides that have been approved for use by EPA, Cal-EPA, and Caltrans. Pesticides are one of many tools in an integrated vegetation management program. Pesticides pose a risk when used improperly and the use of some pesticides are riskier than others. Many higher risk pesticides have been added to lists such as prop 65, CCR 6800 - ground water, and federal and state restricted materials.

Herbicides come in many different application types but many are sprayed as seen in Figure 2-6. One problem with spraying is that winds can cause the chemicals to drift away from their target areas. Chemical adjuvants are added to reduce drift and improve pesticide action.

In 1992 the Caltrans environmental impact report was completed. One of the key items in the report was related to the large use of herbicides [8]. After this report was released, Caltrans modified its integrated vegetation management (IVM) program. One of the

Copyright 2013, AHMCT Research Center, UC Davis

goals of IVM is to reduce chemical (herbicide) usage by 50% in the year 2000 and 80% by the year 2012 [2]. With a goal of 80% reduction, it is clear that alternatives to this class of vegetation control must be considered.

Figure 2-6 Herbicide Sprayer Truck [9]

2.3.3 Hot Steam

A more environmentally friendly way to control vegetation is by using hot water, this essentially cooks the plant. This method is widely known on the internet and used by organic farmers, but the origin is unclear. Water is simply boiled and quickly applied to any unwanted vegetation; in a short time the plant will be totally dead [26]. High levels of heat imparted onto the plant from the boiling water causes the plants cells to burst while at the same time melting always the waxy coating on the leaves and stem. This process cooks the plant and it will dry out shortly after. This method can be as simple as boiling water in a tea pot or it can take the form of dedicated vegetation maintenance equipment.

Some of the variations of the hot water approach include: hot steam, hot foam, and super heated steam [22, 27]. Hot water systems (in all their incarnations) can be a very good alternative in areas that are sensitive to chemicals and where mowers simply cannot go. An example of a hot foam application can be seen in Figure 2-7. These methods are particularly useful near waterways or wells where it would be risky to use chemicals because of the possibility of contaminating the near by bodies of water. Since this method is essentially nothing more than hot water there are no direct environmental concerns or risks to people or pets after application.

Copyright 2013, AHMCT Research Center, UC Davis

Figure 2-7 Workers applying Hot Foam [27]

The attributes of hot water systems allow them to go where mechanical mowers are not well suited: plants growing in cracks, the base of posts, around tress, all with ease and low risk. The one possible concern with this method and all its variations is the ability to cause water runoff or erosion. The next category of vegetation control Hydro-Mechanical obliteration also suffers from this same problem. Exposure of the workers to the heated water and equipment is a potential safety hazard.

2.3.4 Hydro-Mechanical Obliteration

Hydro-mechanical obliteration, unlike the hot water methods, uses no heat. This method is a novel approach in the field of vegetation control, though the concept is not new. High power water jets have been used in manufacturing to cut metal parts up to a few inches thick for years [28]. Hydro-mechanical obliteration seen in Figure 2-8 is similar to traditional cutting systems, such as mowing, in that it relies on physical forces to cut and mulch the plant materials. High pressure jets are employed as the cutting blade. Water from a storage tank compressed between 21000 and 48000 kPa (3,000 and 7,000 PSI) [9] is transported to the cutting system through hoses. The cutting system is a high pressure nozzle, in the simplest case, attached to a hand held wand. The high pressured water will cut the undesired plants just like hitting them with a blade. The jets can be used to mulch cuttings back into the soil or push the cut material out of the way but it is time and water consuming.

Copyright 2013, AHMCT Research Center, UC Davis

Figure 2-8 Water Jet in Action

High pressure has similar advantages to hot steam in that its only byproduct is water. High pressure water can be a very good alternative in areas where herbicides are not allowed, some versions can also reach normally difficult or rocky areas. High pressure water also has the ability to clear out normally hard to deal with plants such as pampas grass by mulching the root ball after the plant is cut down. The only noted environmental concern is water runoff and soil erosion. After a treatment is finished it poses no threat to people or animals. High pressure water can be successfully used to remove plants growing in cracks, around posts, and at the base of guardrails, but care must be taken because it can erode wood and asphalt surfaces. Fire risk is low at the point of application but 15HP engines or greater are required to power the system. Depending on the machine configuration, the workers may be exposed to the hazardous water stream.

2.3.5 Heat and Flames

In this category there are two main types of products, ones with an open flame and ones with a contained flame. This tool may be as simple as a gas powered torch or a large and complex piece of machinery that is towed behind a tractor. These systems work on the same principle as hot steam but the delivery method and its related attributes are different. It is common knowledge that fire cooks, kills, and destroys plant matter. These heat methods take this age old knowledge and use fire to control weeds.

The oldest version of these systems use an open flame they work by physically cooking the plant in a way very similar to a roasting food over an open flame. This type of system

Copyright 2013, AHMCT Research Center, UC Davis

works very effectively though it carries the inherent risk of starting fires in dry areas. To combat the risk of fire radiant heat systems have been developed.

Radiant heat systems like the one seen in Figure 2-9 attempt to lower the risk of fire inherent in the open flame systems, by moving the flame inside a controlled environment. Radiant heat systems combust propane inside a ceramic heating element, the heat generated from this is radiated onto nearby surfaces and also heats the air. The hot air and radiated heat thoroughly cooks any vegetation without a flame coming into direct contact with the plant matter. This system creates heat much higher than most people would cook with at home. It is not uncommon to use temperatures between 800F and 2000F (427C - 1093C) with radiant heat [26]. The hardest part about this system is calculating how much of a heat exposure each item needs. Too little time and the plant will not be fully cooked, too much time and the chance of fire increases. The exposure time can change widely with ground conditions.

Figure 2-9 Radiant Heat Attachment

This system uses no chemicals and so it can be considered environmentally friendly from that standpoint. Unlike the previous 2 systems, there is no concern with runoff or soil erosion associated with this system either. It does require burning propane so there are some emissions, but propane is a clean burning fuel, and the impact should be relatively low. One of the largest benefits of this system is its ability to actually kill weed seeds before they even have a chance to germinate. The major drawbacks of this system are that it uses intense heat which can cause fires, especially in dry areas. Because plants

Copyright 2013, AHMCT Research Center, UC Davis

and seeds need a certain contact time with the heat source application, speeds are limited to the 1.6 – 4.8 kph (1-3mph) range [26]. This treatment is usually self contained and can be attached to a tractor or boom and used in the same manner as one would use a mower.

2.4 Summary of Debris Control Equipment in Toolbox

Debris and litter control equipment was studied next, after the investigation into vegetation control equipment was complete. An approach similar to what was used for the vegetation control equipment was used. Initially, a literature review of previous research in the field was conducted. Some equipment was found, but not as much as for vegetation control. An internet search was done looking for anything and everything that could be used to collect litter. The internet search yielded a lot of equipment and concept ideas. Venders and manufacturers of the equipment were then found. A search of the US Patent Office database was completed to be thorough. Finally, the internet was searched more broadly using generalized categories of equipment.

It is harder to place debris control equipment into classes than vegetation control equipment. Debris control equipment generally falls into one of three possible classes: various forms of vacuums, various types of rakes, and various types of robotic arms. A short summary of the different equipment types is described below.

2.4.1 Vacuum Type

The first class of equipment is the vacuum type. This group of equipment acts like a super sized version of a home vacuum cleaner. This group contains street sweeper type vehicles, and the "Automated Roadway Debris VACuum" or "ARDVAC" system developed by AHMCT. Street sweepers are limited to collecting small items on pavement, so the ARDVAC will be focused on here.

The ARDVAC seen in Figure 2-10 is a large vacuum system with a 30.5 cm (12 inch) diameter hose connected to a fully articulated nozzle that can be used to create a sweeping motion [6]. The boom motions combined with the ARDVAC end-effector motions gives the system six degrees of freedom. Having so many degrees of freedom makes the system ideal for reaching into hard to get to places. The ARDVAC is used for removal of small to medium sized pieces of litter such as newspapers, bottles, cans, and chunks of wood.

Copyright 2013, AHMCT Research Center, UC Davis

Figure 2-10 The ARDVAC Truck [6]

The ARDVAC is effective in removing litter items from hard to reach places while keeping the operators away from road side hazards. The entire system can be easily controlled from the cab of the truck by using a joystick to position the "vacuum cleaner" nozzle. The ARDVAC is best described as a complementary device to traditional street sweepers; its relatively small nozzle can go where street sweepers can not reach. The ARDVAC cannot, nor was it intended to, replace street sweepers because its small nozzle limits its effective width of cleaning. The most significant benefits are when it is used in areas like paved and unpaved areas with guardrails, paved and unpaved transitions, and ditches [6]. In those situations the positional arm allows the operator to reach over, around, and behind unmovable objects, much in the same way that a vacuum cleaner system can be used at home.

2.4.2 Raking Type

The next class of equipment is the raking type. One type of rake equipment is the Barber Litter Picker shown in Figure 2-11. The Little Picker is towed behind a truck or tractor, and uses a series of steel spring loaded tines to scoop up litter and deposit it into an onboard storage bin for later disposal.

Copyright 2013, AHMCT Research Center, UC Davis

Figure 2-11 Barber Litter Picker Being Towed

The Barber Litter Picker is capable of picking up a wide range of trash in the medium to medium-large category. According to the manufacturer these devices are effective at collecting retreads, old mufflers, lost hubcaps, chunks of wood, and more [29]. The Litter Picker's usable areas are limited because it must be towed behind a truck or tractor. The Litter Picker is bested suited for fields and wide open places without many obstacles similar to the kinds of areas that a tow behind mower would be used. It may also be useful along roadsides.

Another type of raking device is the Schwarze Roadhawk seen in Figure 2-12. This machine was created for large items found on the road. It is a relatively large vehicle that is limited to staying on hard ground. The Roadhawk has a set of rubber fingers that act in a similar manner to the Barber Litter Pickers steel tines. The device is self propelled and can be driven on the road, but it must slow down to pick up items.

Copyright 2013, AHMCT Research Center, UC Davis

Figure 2-12 Schwarze Roadhawk Ready for Action

The Roadhawk is not a replacement for a street sweeper, but it is a complementary machine because it picks up the large items that a sweeper cannot pick up. It is recommended that the Roadhawk be used in front of street sweepers. In this configuration the Roadhawk will collect large items that would damage a street sweeper and the sweeper will clean up the small stuff that is left behind by the Roadhawk [30]. Operating the Roadhawk in series with a street sweeper in this manner will leave the roadway very clean and minimize the time required.

2.4.3 Robotic Arm Type

The next class of debris collection vehicles uses a robotic arm to collect items and deposit them in a truck to be disposed of later. One vehicle in this class is the Debris Collection Vehicle seen in Figure 2-13. This vehicle is designed primarily to collect full trash bags, but it can also be used to pick up old tires and other items on the side of the road. Work crews of volunteers, and inmates collect trash/debris and place it into bright orange colored bags on the side of the road. After this is done the bags must be promptly picked up or the bags will become trash. Picking up the bags of trash is normally a slow and inefficient process requiring someone to drive along the roadside stopping periodically to pick up the bags. This is also hazardous because workers can be injured from lifting heavy items or by being infected by discarded hypodermic needles that are collected by cleanup crews. The Debris Collection Vehicle can improve this stage of the process by letting workers collect the bags without getting outside of the vehicle.

Copyright 2013, AHMCT Research Center, UC Davis

Figure 2-13 Debris Collection Vehicle [6]

This system can be used on almost any roadside that requires trash bag pickup. The arm also allows the user to pick up items on either side of the truck. Its major limitation is that it cannot pick up heavy items such as old stoves or couches [6].

There is a similar though higher capacity type of vehicle called the Grapple Truck an example of which can be seen in Figure 2-14. Grapple trucks are capable of picking up much heavier items than the Debris Collection Vehicle. All the versions of the grapple truck include an arm and most of them have a dump bed. These vehicles come in a variety of different configurations for different types of tasks. Some have rear wheel steering. This device is well suited for collecting medium to large pieces of trash and debris but it is not a suitable choice for collecting small items. Most of the items the Grapple Truck collects can be deposited in the dump bed until the end of the day. The ability to store collected trash onboard eliminates the need to follow with a separate dump truck unless collecting very large amounts of debris. These vehicles are rather large vehicles and thus cannot operate in small areas. They can be parked on the roadside and used to reach into areas to pick up debris. The Grapple Truck is very effective at removing large piles of trash, large debris (such as old stoves, refrigerators, scrap iron, trees, etc.) and it can be driven on roadways at normal speeds.

Copyright 2013, AHMCT Research Center, UC Davis

Figure 2-14 Grapple Truck Lifting Old Fridge

2.5 Conclusion

This chapter provided a brief look at the current state of equipment for vegetation and debris control. Rather than list hundreds of individual models of equipment, groups of equipment were combined into classes of operation. For vegetation control the classes of operation included: various forms of mechanical mowing, steam, and heat as well as hydro-mechanical and herbicides/chemicals. For debris control the classes of operation included: vacuum, raking, and robotic arm. In later chapters and the online version of the toolbox, equipment will continue to be kept in classes, some classes may be more refined and some may be more general. This collection of equipment is summarized in the Vegetation and Debris Control Toolbox.

Copyright 2013, AHMCT Research Center, UC Davis

CHAPTER 3: WEB BASED TOOLBOX

3.1 Chapter Summary

The online toolbox is introduced in this chapter. Project stakeholders and their goals are identified. The toolbox layout is explored. The equipment scoring system is explained, and example calculations are given. Some sample equipment contained in the toolbox is ranked and the results are discussed. Examples of how the toolbox can be used are given in closing. This is a proposed methodology for evaluating different alternatives and a method to communicate the results. Factors and values shown in this chapter are only an example. Full implementation would require an iterative process of information collection from users within Caltrans and similar stakeholders.

3.2 Introduction

The toolbox for vegetation and debris control is designed primarily to be used by Caltrans to aid in the selection of equipment for various tasks. The toolbox is an internet based tool, it forgoes fancy animations or flash, instead it focuses on being user friendly and cross platform compatible. A relatively simple layout and design is used thus limiting the processing power required to render the pages. Due to the simple and low requirement design it is accessible on mobile devices such as internet enabled smart phones, PDA's, and laptops. Easy accessibility and portability allows use as a job site reference tool.

The toolbox is primarily focused on making information regarding comparisons between classes of tools easily accessible. This will allow people in the field to apply past or current research on current jobs. Previous comparison work, while interesting, is generally not easily accessible, and not intended as a tool selection guide for the job at hand. In one such previous work entitled, "Feasibility of Alternative Vegetation Maintenance Control Technologies," different types of vegetation control methods are compared. The intent of this work is to test the feasibility of alternative maintenance methods [9], but there is no way for workers in the field to observe the results and apply them to their present job. The key difference between the toolbox and other research efforts before it is that the toolbox is intended as a tool to help actual workers, at actual job sites, select the right tool for the right job.

Copyright 2013, AHMCT Research Center, UC Davis

Equipment contained within the toolbox is broken into classes as seen in the previous chapter. Classes of equipment are organized and ranked in a manner that will help determine the best equipment for a particular job. Some classes of equipment are more refined than others. There are at least 6 classes of mowers, while there are only 2 classes of herbicides. It is assumed that although there are many different specific pieces of equipment contained within a class, most of them can be used interchangeably. The user can view a class specific page, once a class is selected, and see general information as well as a list of vendors and brands that manufacture and sell that type of equipment. The user may do further research about particular brand or model of equipment within a class if they wish, but this is beyond the scope of the toolbox.

A concept scoring matrix will be used to subjectively compare different tools in different scenarios. This concept scoring matrix will be derived from a simplified and modified subset of the categories used in previous research for vegetation control equipment [9]. For the debris control equipment a new scoring matrix will be developed. This new matrix will attempt to recycle some categories (such as safety aspects) in order to ensure scoring uniformity.

The toolbox encompasses many different types of equipment and scenarios. Looking at a large set of equipment allows a user to quickly understand the current state of the industry. A side benefit of this is that weak points in the industry will become obvious, and new equipment can be developed to fill job needs. It is hoped that the toolbox will prove to be useful and easily expandable as future equipment technologies become available.

3.3 Project Goals

The objective for the vegetation and debris control toolbox is to facilitate choosing the best available equipment for the job. Some of the more detailed goals include:

- Build a framework that is clear and can be expanded easily as needed.
- Develop a scoring system that is consistent and unbiased.
- Include a wide variety of equipment in one location.
- Allow for easy comparison of different tools in different situations.

Copyright 2013, AHMCT Research Center, UC Davis

- Explore alternative technologies for vegetation and debris control.
- Identify areas in need of more tool development.
- Allow people in the field easy access to the information

3.4 Project Stakeholders and Their Requirements

Caltrans and AHMCT invested the resources to create the toolbox, and are the primary users of the toolbox. Their involvement in its creation and their use of it makes both AMHCT and Caltrans the primary stakeholders in the project. As stakeholders, AHMCT represents the role of the research community and Caltrans represents the role of the end user for whom the research will apply. AHMCT would like to offer a device that is useful to Caltrans. AHMCT would also like to promote some of the tools designed by AHMCT that are applicable to the scenarios contained within the toolbox.

The two major stakeholders have been identified, but there are also many other smaller stakeholders. The toolbox contains a wide variety of equipment that involves a wide variety of manufactures and designers. These groups want their equipment to be well known to the public so that they will generate more sales. There are also stakeholders other than manufactures and designers. Other groups using the toolbox could become stakeholders. Some of these stakeholders may include private contractors, other state departments of transportation, or private home owners. The toolbox may also be used to research and develop agricultural equipment to control noxious weeds. With so many people using the toolbox the UC Davis Department of Mechanical and Aeronautical Engineering (of which the AHMCT is a part) also benefits through exposure to a diverse group of people and industries.

There are also stakeholders that benefit indirectly from the toolbox. Groups such as motorists benefit from better maintained roadways as a result of increased efficiency in maintenance, and families by reduced risk to loved ones because of the improved roadways. Tax payers may be interested in cost reductions for maintenance operations. Environmental groups may be interested in the impact that different types of equipment and materials have on the environment.

Copyright 2013, AHMCT Research Center, UC Davis

It is clear that there are many stakeholders, each of which has a slightly different agenda or goal.

Table 3-1: Stakeholder Goals

Category	Specific Entity	Goal
UC-Davis	**UC Davis Mechanical and Aeronautical engineering.**	• **Enhance its image** • **Attract more talent**
	AHMCT	• **Increase value to Caltrans** • **Deliver useful equipment/tools**
Caltrans	**DRI**	• **Improve overall efficiency** • **Develop new items**
	Maintenance	• **Get jobs done faster** • **Redo jobs less frequently** • **Lower maintenance burden**
	Operators	• **Lower job related accidents** • **Minimize learning curve**
Industries	**Equipment Manufacturers**	• **Improve marketing** • **Increase Sales** • **Improve image**
	Manufacturer Competitors	• **Keep and eye on the competitors**
Other Users	**Other DOT's**	• **Improve efficiency** • **Improve worker safety**
	Private Contractors	• **Cut costs**
General Public	**Tax Payers**	• **Lower costs/taxes**
	Road users	• **Improve quality** • **Decrease travel times** • **Lower accident rate**
	Pedestrians	• **Increase usability**
	Environmentalists	• **Decrease usage of toxic chemicals** • **Improve quality of**

Copyright 2013, AHMCT Research Center, UC Davis

natural environment

These groups are considered when designing the toolbox; however, it is the primary stakeholders that are given the most weight. Designing the scoring system and layout to first and foremost meet the needs of the major stakeholders will ensure that the toolbox is accepted and give it the best chance to fulfill its potential. A summary of the stakeholders and some of their possible goals is given in Table 3-1.

3.5 Structure and Organization

The toolbox is structured to be easy to use. It is intended to be simple so that anyone interested in selecting equipment for vegetation or debris cleanup tasks can quickly get the information required. The toolbox has been developed from the ground up to be displayed on the internet. It can be accessed from a desktop, laptop, or even mobile phone with high speed internet capabilities.

All pages of the toolbox follow the same general layout; this layout is defined as a cascading style sheet and applies to everything uniformly. On the left hand side of the screen there is a control bar (seen in Figure 3 1 section B) that allows the user to jump quickly between points. The main buttons displayed will change depending on what is currently being shown in section A.

Copyright 2013, AHMCT Research Center, UC Davis

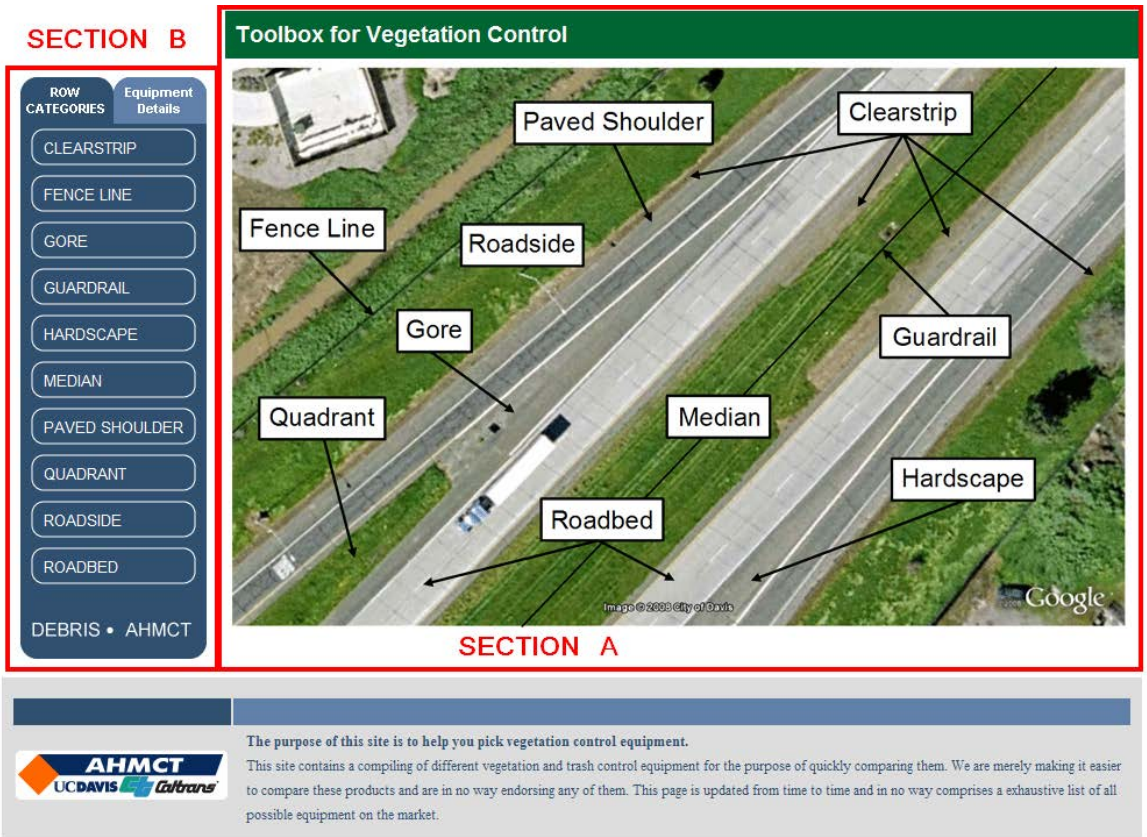

Figure 3-1 Toolbox General Layout

Some parts of the control bar, however, will always be fixed in location. At all times the top two tabs of the control bar let the user quickly switch between right-of-way categories and equipment details. At the bottom left there is always a button that allows the user to switch between debris and vegetation mode. The bottom right is always the button to return to the AHMCT main web page. All navigation in the web page can be accomplished exclusively using the control bar; however it is not intended for such use.

The right side of Figure 3-1 (section A) is the main user interactive area and is the focus of the toolbox. This section of the web page displays relevant information and is also used as the graphical user interface. When a button, link, or image is clicked, this section of the screen will always change; the control bar may or may not change.

The home screen of the vegetation control portion of the toolbox contains an aerial map of a typical highway with common areas labeled (as seen in Figure 3-1). It is important to note that the aerial map is from Google Earth and is used under the “fair use” laws; if the toolbox becomes a commercial tool further licenses may be required. To get started

Copyright 2013, AHMCT Research Center, UC Davis

with the toolbox the user must simply click on an area of interest. Recall that the control bar will always stay in place on the left and can be used at any time to jump to a specific point as needed. If one of the ROW categories is selected either from the aerial view or by using the control bar, the comparison page (shown in Figure 3-2) will be displayed. The comparison page is the real meat and potatoes of the toolbox. In that page a representative image or images of the current category are displayed at the top of the screen. Below this is a table which contains tools that could be employed. The first few rows of the table are highlighted; these rows contain the current or most common tools used for this scenario. The equipment listed below the highlighted rows is all of the alternative equipment. The rankings are separated into four columns: Public Safety, Worker Safety, Environment, and Cost & Efficiency. In each case a score of 10 is the best possible and a score of 1 is the worst possible. This comparison table allows for quickly comparing many different types of tools in the given ROW category. If a tool of interest is found, more information about that specific type of tool class can be obtained by simply clicking on the thumbnail image on the left side of the comparison table.

Copyright 2013, AHMCT Research Center, UC Davis

Figure 3-2 Toolbox Comparison Table

Clicking on the thumbnail will bring the user to the tool class page that has specific representative images of the types of tools in the class, and general information about the tools. The control bar tab will change from ROW Categories to Equipment Details, and the control bar itself will change into a list of all the tools contained in the vegetation control toolbox.

The tool class specific page (Figure 3-3) normally contains six specific categories of information: what is this treatment, when to use this treatment, benefits, limitations, costs, and suppliers/venders/manufacturers. This page is designed to give the user a feel for the particular tool class and provide the user with links that can be used to do more research, or obtain a specific model of tool contained within the class.

Copyright 2013, AHMCT Research Center, UC Davis

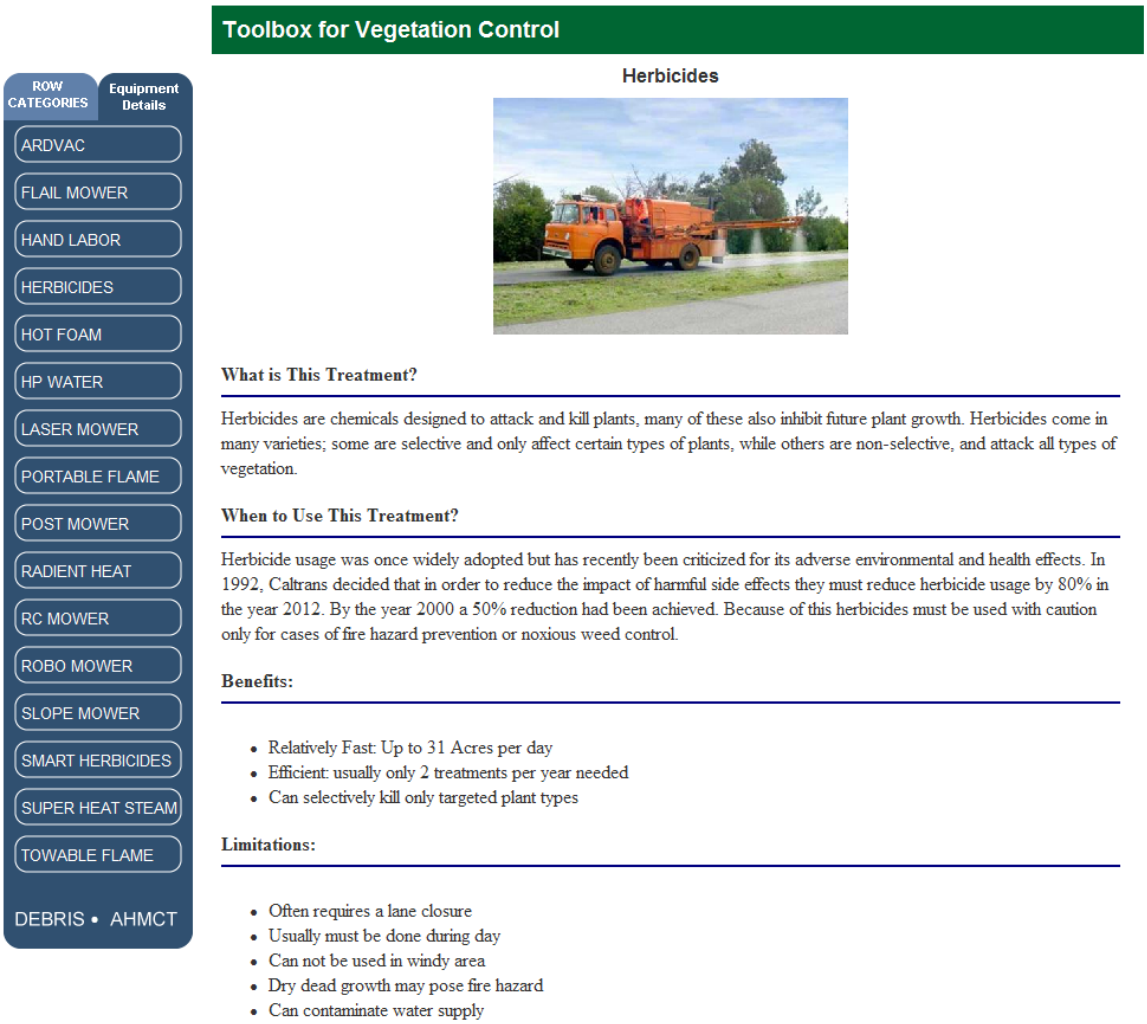

Figure 3-3 Tool Class Specific Page

If the user clicks on the Equipment Details tab found at the top right of the control bar, they will be taken to the master list of equipment in graphical form as seen in Figure 3-4. Clicking on any equipment in a photo will take the user to that class specific equipment page.

Copyright 2013, AHMCT Research Center, UC Davis

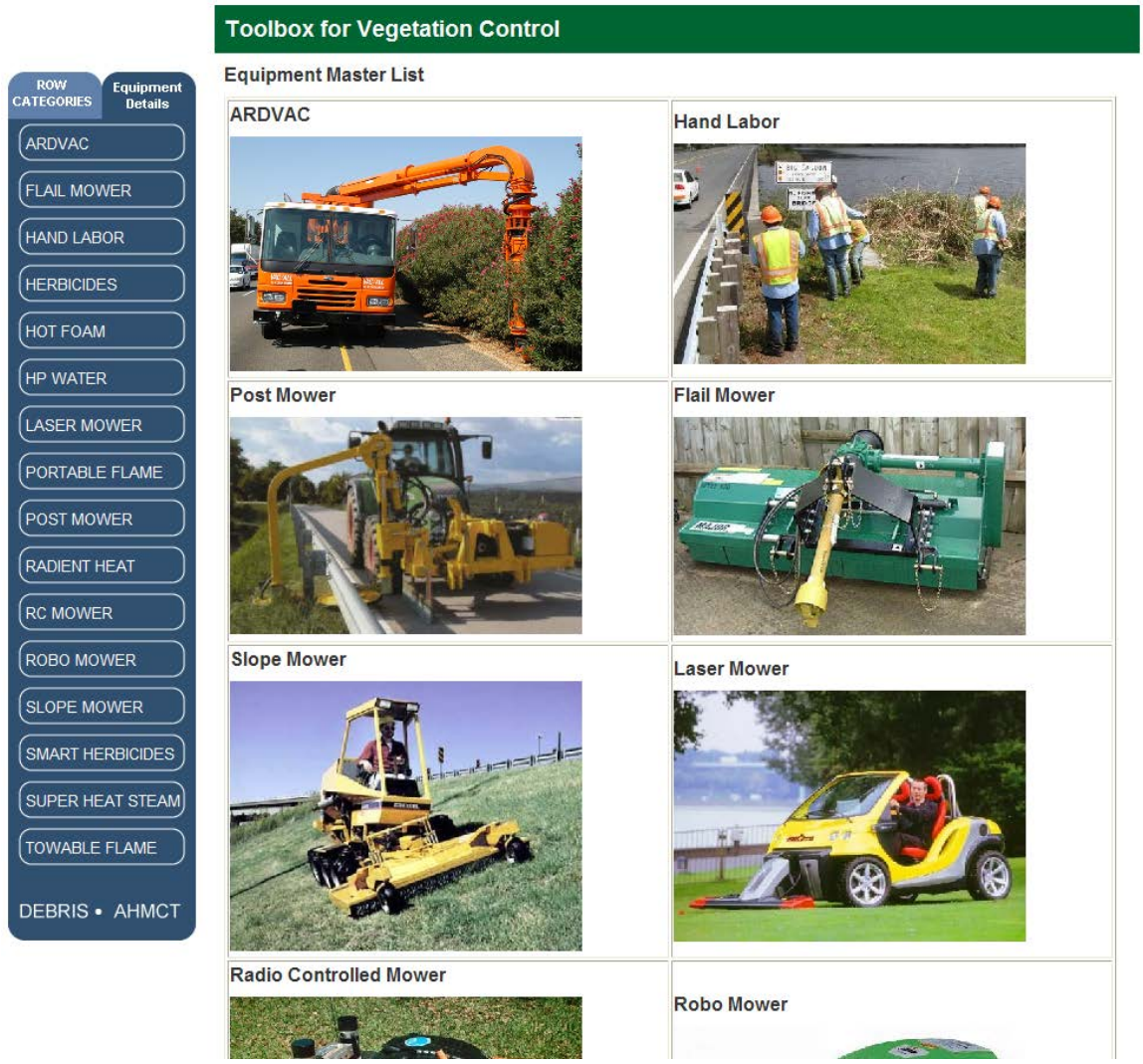

Figure 3-4 Equipment Graphical List

Rather than go through the layout for the debris control portion of the toolbox, it is sufficient to say that all of the features, layout, and designs are the same as that for the vegetation control section. Every option is designed to mirror that of the vegetation control toolbox to allow for seamless transition between the vegetation and debris control sections. The only difference is the actual equipment contained and the concept scoring matrix used which will be discussed later.

The idea behind the toolbox has been presented, as has the actual structure and layout of the design. A question still remains, how are the scores within the toolbox calculated? The following sections will show in detail how the scores are calculated and give examples from various sets of actual comparisons done.

Copyright 2013, AHMCT Research Center, UC Davis

3.6 Equipment Scoring Rational

The toolbox compares sets of equipment classes for completing a particular task. A concept scoring matrix is used to accomplish this in a subjective way. When adding a new tool to the toolbox the user need simply fill in the boxes of the scoring matrix using one of the three possible values. The concept scoring matrix generates raw scores for each individual tool. Once the raw scores for each tool in a set are acquired, the whole set is normalized with respect to the highest scoring tool. This is done because the scores in the toolbox are intended to be relative only to the comparison set. The scores are not intended to be absolute, implying that somehow a tool shown is the best choice bar none.

Complex or very task specific concept scoring matrices have been used for ranking systems in the past. The concept scoring matrices used in the toolbox are, to some extent, derived from previous research [9]. However, they are much simpler and more flexible. Building the toolbox concept scoring matrices on previous work allows results from past work to be easily incorporated into the toolbox and makes research efforts more continuous, and compatible. The toolbox uses two distinct but similar concept scoring matrices, one for vegetation control and one for debris removal. The similarities between the two ensure scoring uniformity between the sections of the toolbox.

The vegetation control and debris removal concept scoring matrices are both organized in columns, for reference Table 3-2 (the vegetation control concept scoring matrix) is shown below. In both matrices each column represents a main category: Public Safety, Cost and Efficiency, Worker Safety, and Environment. Each main category contains within it four points of interest. Each of the four points of interest has an assigned weight, the weights of each column must add up to 100.

Table 3-2: Toolbox Vegetation Scoring Matrix

Public Safety	Weight	Worker Safety	Weight	Environment	Weight	Cost & Efficiency	Weight
Minimize Health Risk	40	Minimize Manual Labor	20	Decreases or Avoids Chemical Concentration	50	Minimizes Cost	35
Minimize Fire Risk	30	Minimize Safety Equipment Required	20	Decreases or Avoids Runoff	10	Decreases Treatment Time	35

Copyright 2013, AHMCT Research Center, UC Davis

Minimize Traffic Congestion	10	Minimize Foot Labor	30	Decreases or Avoids Erosion	20	Decreases Treatment Frequency	20
Minimize Damage to Roadway Surface	20	Minimize Exposure to Chemicals	30	Minimizes Fire Risk	20	Resistant to Extreme Weather Conditions	10
Safety Score		**Worker Score**		**Environ Score**		**Cost Score**	

The weighting considers the needs of the major project stakeholders (Caltrans and AHMCT), and ensures the results will be relevant to those stakeholders. In most cases it is very difficult to obtain precise numbers which can be used to fill in the concept scoring matrices. To deal with this a new approach, Fuzzy logic, will be employed to keep the system as objective as possible.

3.6.1 Fuzzy Logic

Fuzzy logic is a form of logic that does not require statements to be either true or false, but rather statements and inputs can have varying levels of truth. Fuzzy systems take infinitely variable inputs and uses membership functions to transform these inputs into Fuzzy values that can be acted upon by logical English statements. After Fuzzy logic is applied, a process known as defuzzification must be applied in order to convert the results of the Fuzzy logic back into normal numerical values so that they can be used for more calculations [31]. This may sound like gibberish but it is really very intuitive. A simple example will clear things up.

Coffee drinkers can agree that there is a perfect temperature to brew coffee. The problem is that it is difficult to agree what this perfect temperature is because there is a range of perfect temperatures depending on who is consulted. Also it is difficult to achieve the perfect temperature all the time. Variables like ambient temperature, climate, elevation, time of year, etc, may change how the coffee should be brewed to reach its perfect temperature. The brewer could simply heat the water for a specific time and hope that it is hot enough at that point, but this is not likely to work very well. The brewer could try to heat the water until a thermometer said they had reached their predetermined perfect temperature and then instantly stop the heat, but the temperature would quickly change once the heat was removed. Rather than use the above inefficient and ineffective

Copyright 2013, AHMCT Research Center, UC Davis

methods a computer, with a Fuzzy controller, and some type of temperature measuring device can be used to totally automate the process.

The first step in designing a Fuzzy controller for this job is to define values that the average coffee drinker perceives as a proper temperature for conditions. In this case values for cold, warm and hot are used. Since it is difficult to agree on exact values assigning some kind of a range to each is appropriate. For this example anything in the range of 0-30 degrees is defined as cold, 80-120 degrees is defined as warm and 170-200 degrees is defined as hot. If a temperature is measured as 20 degrees then the statement "the coffee is cold" is 100% true since it is in the cold range, the same holds for the other categories. To signify this relation flat lines are drawn and labeled with y-axis values of one (signifying 100% truth) in the ranges of cold, warm and hot as shown in Figure 3-5.

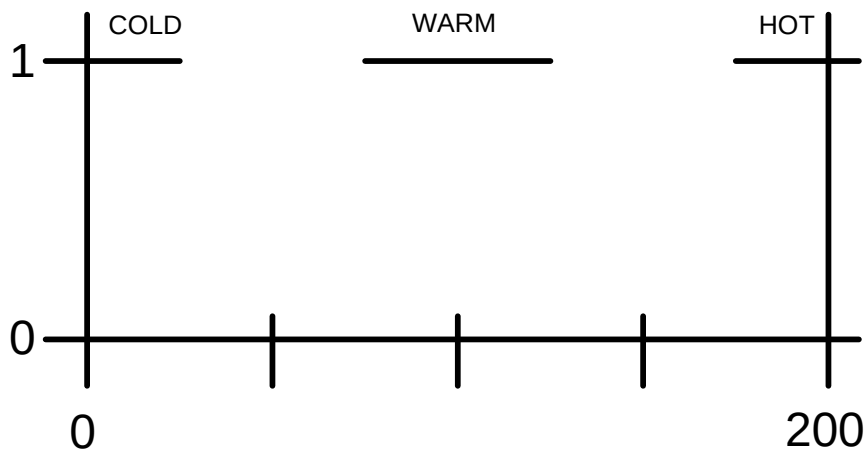

Figure 3-5 Coffee Temperature Ranges

Once the ranges are defined, there still exists the area between each range where some kind of variable transition occurs. These transactions must be defined in order to move forward. Traditional systems would require a sharp transition from cold to warm but Fuzzy logic does not require this. Since items are allowed to have degrees of truth, gradual transitions between states are possible. As the coffee warms the level of truth in the statement "the coffee is cold" is no longer 100%, it is actually decreasing toward zero. At the same time the statement "the coffee is warm" is starting to become true, it is increase towards being 100% true. To signify this, a downward sloping line is drawn from the end of the cold range at point (40,1) to the zero point (100,0) directly below the start of the pure warm range.

Copyright 2013, AHMCT Research Center, UC Davis

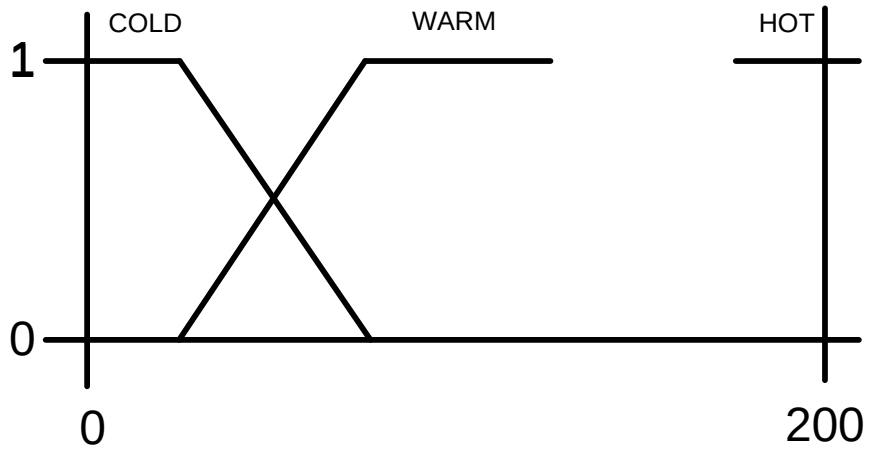

Figure 3-6 Coffee Transition Areas

Also a separate upward sloping line is drawn from the point (40,0), directly below the pure cold range to the point (80,1) which is the start of the warm zone. This result of doing this can be seen in Figure 3-6, this is what is known as a membership function.

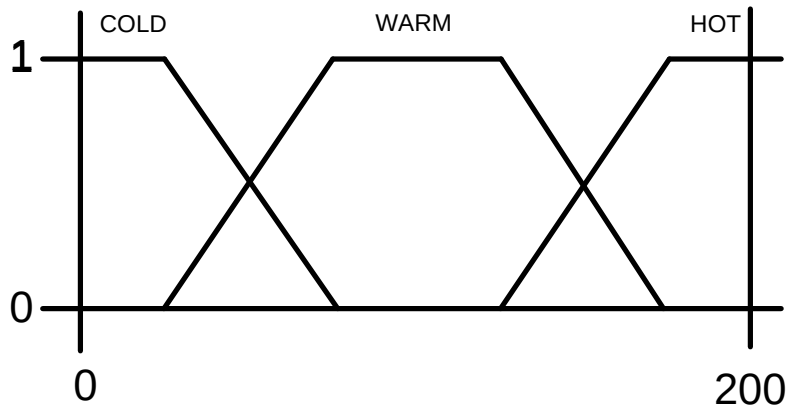

Figure 3-7 Complete Membership Functions

The same type of reasoning, using levels of truth, is applied to the transition between the warm and hot regions as well. Doing this yields the final membership function shown in Figure 3-7.

Once all the regions are defined the next step is to write the governing logical statements that will control the heating and cooling of the coffee. These are simple English statements written in a way that makes sense to the user.

1. If coffee is Cold, Turn on Heater
2. If coffee is Warm, Turn on Heater
3. If coffee is Hot, Turn off Heater

Copyright 2013, AHMCT Research Center, UC Davis

Statement one and two are simple and contain no apparent contradictions, if the coffee is between Cold and Warm it is clear the heater should be turned on. What happens, however, if the coffee is between Warm and Hot? In this case statements two and three both apply. Two says the heater should be on and three says the heater should be off. This is resolved by using degrees of truth. Assume the coffee is 160 degrees; this point is in the transition zone between warm and hot. As seen in Figure 3-8 membership function Warm is valued at 0.15 and Hot is valued at 0.85. In this case logical statement two is 15% true and logical statement three is 85% true.

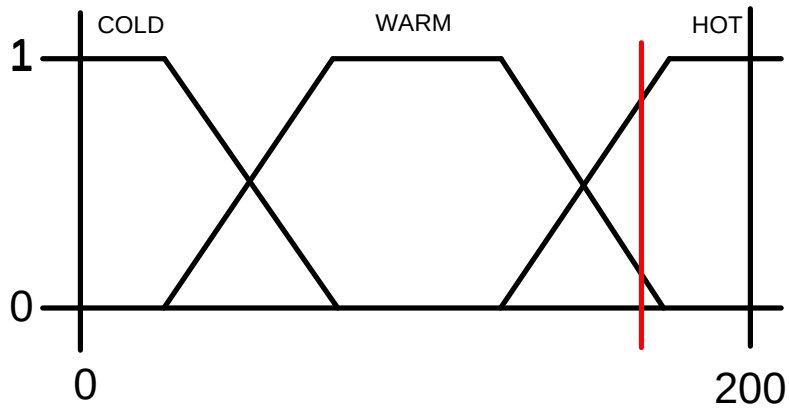

Figure 3-8 Coffee Between Regions

To continue with this the output functions seen in Figure 3-9 must be introduced. These functions are related to the membership functions through the logical statements. They define the output for each possible logical statement command. There are only two output curves because the logical statements only have two possible outcomes: Turn on Heater, and Turn off Heater.

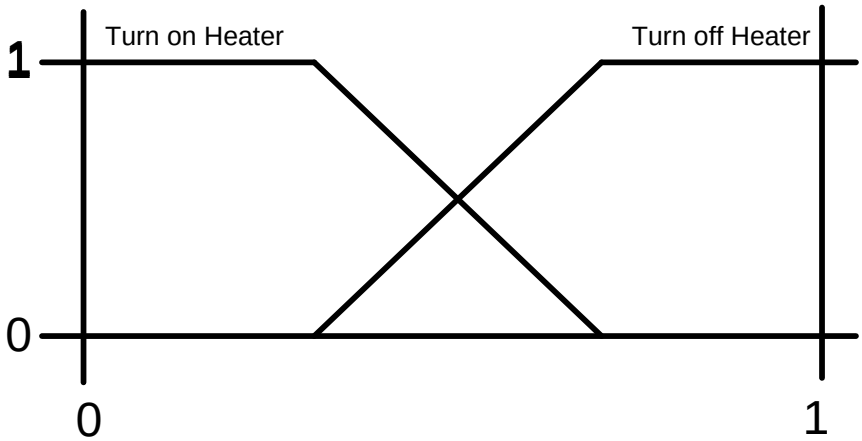

Figure 3-9 Coffee Output Functions

Copyright 2013, AHMCT Research Center, UC Davis

Now that the output functions are defined, the example can be continued. In the case where the coffee is 160 degrees, and both logical statements 2 and 3 apply, output curves Turn on Heater and Turn off Heater both must be applied. To do this the area under the Warm curve is filled in to a height of 0.15 (the level of truth of its logical statement), and the Hot curve to 0.85 (the level of truth of its logical statement). This will form the composite shape shown in Figure 3-10.

To finish the problem a single output value is needed, to get this a process known as defuzzification is applied. Many methods exist to defuzzify the output, but in this case the centroid method will be used. The centroid method uses for an output the x value of the composite area centroid, in this case 0.65. To understand what 0.65 means, the x-axis, and the position of the output functions, must be considered. The x-axis value of 1 corresponds to Turn off Heater 100%, and Turn on Heater 0%, this implies that the units are the inverse of the heater power level. In other words 0.65 means the heater should be 65% off (35% on) How turning a heater 35% on would be achieved is not important, perhaps a medium power setting would be used or perhaps the heater could be pulsed on and off in a 35% duty cycle pattern.

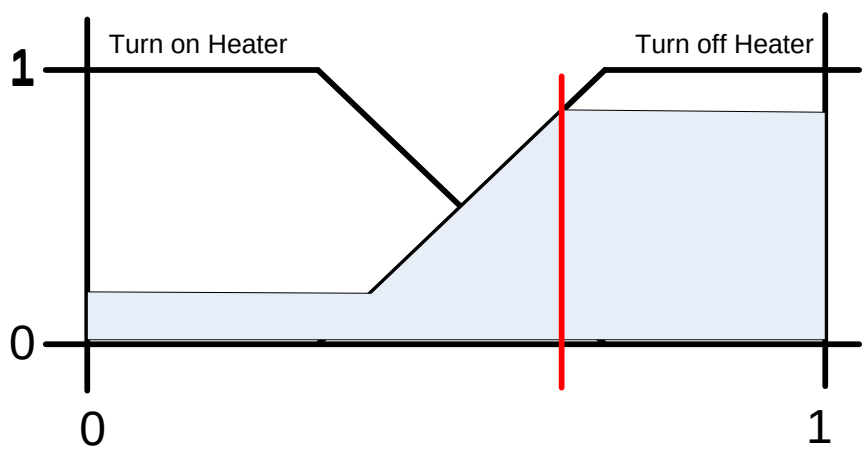

Figure 3-10 Coffee Centroid Calculation

3.6.2 Fuzzy Logic Applied to the Toolbox

As seen in the previous section Fuzzy logic can allow for reasoning in approximate situations such as heating a cup of coffee until it is hot. To do this, membership functions are drawn to represent levels of truth and governing logical statements are written. The logical statements take the results of the membership functions and transfer them to the

Copyright 2013, AHMCT Research Center, UC Davis

output functions. The output functions output a numeric value that can be used for making decisions or for more calculations. This same idea is applied to the toolbox to make consistent decisions when ranking equipment.

The toolbox uses Fuzzy logic to convert the English grades of Bad, Marginal, OK, Better, and Good as used in the concept scoring matrices (Table 3-2, and Table 3-3) into numeric values. Once this is complete the numeric values can be used for further calculations. The membership functions seen in figure 3-11 were derived in a similar way as the coffee example functions. Ranges were given for Bad Performance, OK Performance, and Good Performance and then transitions were added. A difference here is that the toolbox membership functions have discrete values of Bad, Marginal, OK, Better, and Good marked on their x-axis, instead of infinite inputs form some type of sensor. The discrete values correspond to the discrete inputs of the concept scoring matrix.

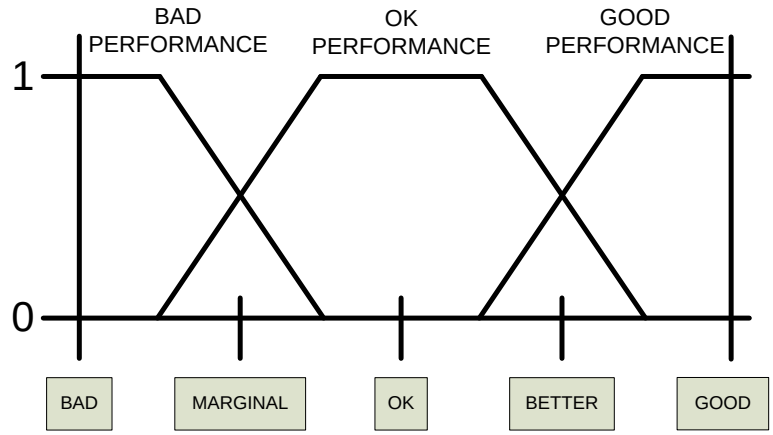

Figure 3-11 Fuzzy Shape Functions

In general, a system may require many logical statements to cover all the possible cases of input/output combinations. The system employed in the toolbox, however, requires only three logical statements to cover all the possible cases.

1. If Good Performance, then output is High
2. If Ok Performance, then output is Average
3. If Bad Performance, then output is low

Copyright 2013, AHMCT Research Center, UC Davis

The toolbox output functions are shown in Figure 3-12. They are identical in shape to the input membership functions that were seen in Figure 3-11. The shape of the output functions can be chosen arbitrarily, as long as it returns results that make sense, and their y-axis values are between zero and one [31]. This particular shape has been selected for convenience and efficiency since it was already constructed for the input membership functions. In general the input and output functions are not necessarily the same shape, as seen in the coffee example.

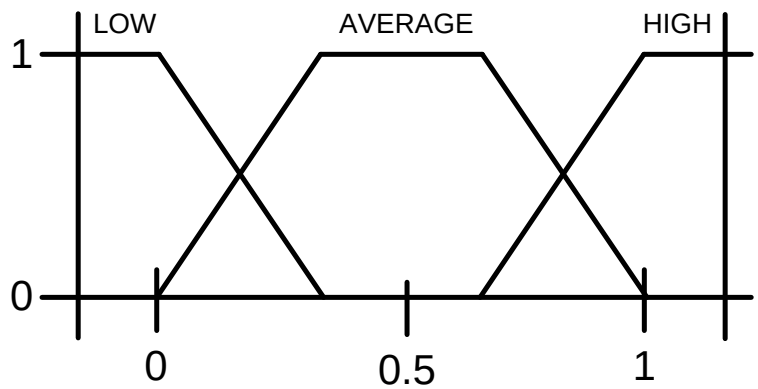

Figure 3-12 Fuzzy Output Functions

To understand how the toolbox specific Fuzzy system works consider two cases. The first case to consider is when the user selects “Good” as their input value. The Good tick on the membership functions x-axis corresponds to a value of 1 on the Good Performance curve. Logical statement number 1 applies here which states that since we are on the Good Performance curve then we must be on the output function High curve. Since the value is 1 on the Good Performance curve, then the area under the High curve is shaded up to a height of 1. Finally, the centroid of this area is calculated to determine the value of x axis. Note that because of the way the shapes were chosen, a user input of Good will always correspond to 1 on the output, OK will always correspond to 0.5 and Bad will correspond to 0 on the output. In these cases, there is no need to actually calculate the centroid.

Figure 3-13 is the second case to consider. This case is when a user selects a value in one of the transition areas such as Better or Marginal. The location where the vertical line intersections the membership functions has an x-axis value of 0.5 on the OK Performance curve and 0.5 on the Good Performance curve. Both curves OK

Copyright 2013, AHMCT Research Center, UC Davis

Performance and Good Performance curves are involved in this selection so logical statements one and two apply.

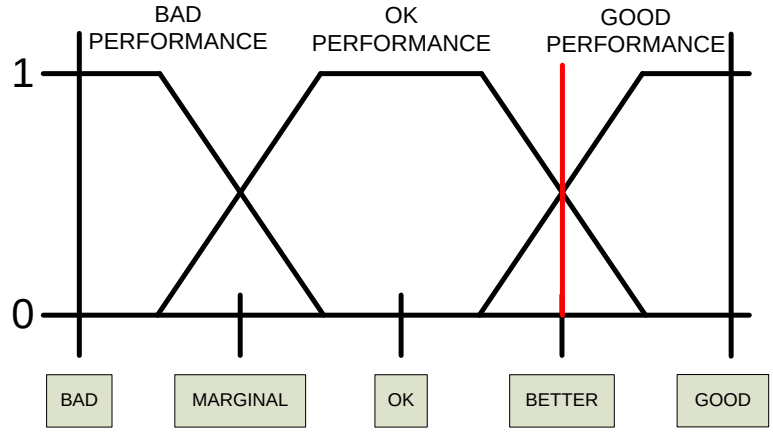

Figure 3-13 Input Selection

Statement one says since we are at 0.5 on the Good Performance curve, then we must fill in the area below the High curve to height 0.5. Statement two says since we are at 0.5 on the OK Performance curve then, we must fill in the area below the Average curve to a height of 0.5. These two areas under the curve overlap and thus form the composite area seen in Figure 3 14. The centroid of this composite area is calculated to determine the output value. The x-axis value of the centroid will correspond to the output value which is used to translate the simple English statements found in the concept scoring matrix.

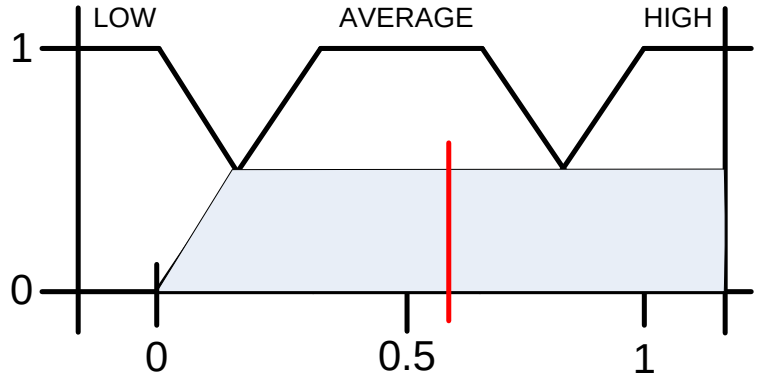

Figure 3-14 Fuzzy Centroid Calculation

The beauty of pre defining the possible input values as discrete and fixed is that the centroid only has to be calculated once per possible input and it will never change. Once the value for each of the possible inputs is known, a simple table can be used to convert English scores into numerical weights. For even more simplicity, it is convenient to

Copyright 2013, AHMCT Research Center, UC Davis

restrict the user selectable values to Bad, OK and Good. By allowing users to only select from three options, a selection can be made much quicker and it can be agreed upon by more people. Only these values will be selected for all of the examples shown in the toolbox later. However, it is later determined that more options are needed, they can be easily added.

The concept scoring matrix as previously seen in Table 3-2 is what all of the vegetation scores in the toolbox are based on. This concept scoring matrix has been developed to cover most cases most of the time, but at times it may be advantageous to consider other factors that were not counted here. One thing to note is that Minimizes Fire Risk is a point of interest found in both Public Safety and Environment categories. Fire Risk in included in both categories because fires have the unique ability to affect both categories in an immediate way. Chemicals and runoff, on the other hand, do not endanger the public in an immediate way. The weights used have been selected to try and match Caltrans' view on the relative importance of the points of interest. These values can be changed easily in the future as priorities change.

The debris collection equipment scoring matrix seen in Table 3-3 is designed to be similar to that of the vegetation matrix to ensure a uniform scoring system. The matrix is modified, however, to reflect the intricacies of debris collection. Public Safety and Worker Safety are essentially the same as the scoring matrix for vegetation control. Cost & Efficiency has been modified to take into account the ability of a piece of equipment to collect debris of various sizes. The section entitled Environment is considerably different than that of the vegetation control scoring matrix.

Table 3-3: Toolbox Debris Scoring Matrix

Public Safety	Weight	Worker Safety	Weight	Environment	Weight	Cost & Efficiency	Weight
Minimize Health Risk	40	Minimize Operator Fatigue	20	Minimize Leftover Debris	20	Minimizes Cost	35
Minimize Traffic Risk	30	Minimize Safety Equipment Required	20	Minimize Soil Impaction	30	Ability to collect small items	35
Minimize Traffic Congestion	10	Minimize Labor on Foot	30	Minimize Vegetation Damage	30	Ability to collect large items	20

Copyright 2013, AHMCT Research Center, UC Davis

Minimize Damage to Roadway Surface	20	Minimize Exposure to Debris	30	Limit Particulate Matter Escape	20	Resistant to Extreme Weather Conditions	10
Safety Score		**Worker Score**		**Enviro Score**		**Cost Score**	

Debris itself is an environmental problem. The ability of any given equipment to pick up all the debris present is not only an efficiency concern but also an environmental issue. Some other environmental concerns that were not in the vegetation concept scoring matrix include impacted soil, damage to native vegetation, and small particulate matter escape (such as the PM10).

3.7 Equipment Scoring Procedure

In the toolbox, equipment is always ranked with respect to a specific scenario and relative to other pieces of equipment contained within the comparison set. The scores do not necessarily imply that the top rated equipment is the best.

Copyright 2013, AHMCT Research Center, UC Davis

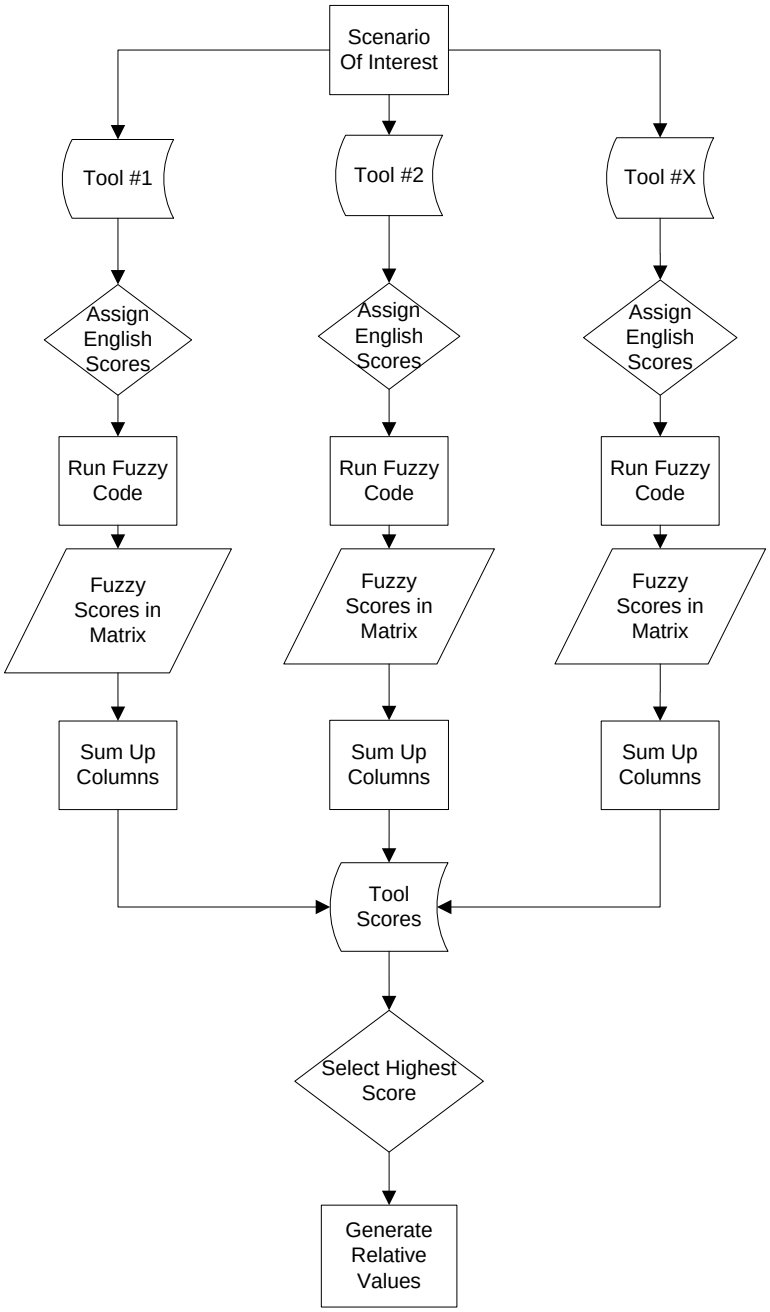

Figure 3-15 Concept Scoring Process

In any category a score of 1 is the worst case score and a score of 10 is considered the best. Figure 3 15 is a useful reference that may be referred to later. Figure 3 15 outlines the equipment scoring process from the initial scenario to the final relative values.

An example is helpful to clarify how the scoring system works. Consider common scenarios found on roadsides, like a guardrail or a sign post overgrown with vegetation to be cleared around. Or perhaps some form of a sign post that needs to be cleared around.

Copyright 2013, AHMCT Research Center, UC Davis

Either way the task will be very similar in terms of equipment that is appropriate. For simplicity sake, a comparison set of only three tools will be used. The three tools to consider are a post mower, herbicides, and steam. Referring to Figure 3-15 we now have a scenario of interest and the tools identified. The next step is to use Table 3 2 and assign the allowable scores to each point for each tool individually. The results of doing this are shown in Table 3 4. The values are filled in with bold italic writing.

Table 3-4: Post Mower Sample Score

Public Safety	Weight	Worker Safety	Weight	Environment	Weight	Cost & Efficiency	Weight
Minimize Health Risk	40	Minimize Manual Labor	20	Decreases or Avoids Chemical Concentration	50	Minimizes Cost	35
Good		***Good***		***Good***		***Good***	
Minimize Fire Risk	30	Minimize Safety Equipment Required	20	Decreases or Avoids Runoff	10	Decreases Treatment Time	35
OK		***Good***		***Good***		***Good***	
Minimize Traffic Congestion	10	Minimize Foot Labor	30	Decreases or Avoids Erosion	20	Decreases Treatment Frequency	20
Good		***Good***		***Good***		***OK***	
Minimize Damage to Roadway Surface	20	Minimize Exposure to Chemicals	30	Minimizes Fire Risk	20	Resistant to Extreme Weather Conditions	10
OK		***Good***		***OK***		***Bad***	
Safety Score	***75***	**Worker Score**	***100***	**Environ Score**	***90***	**Cost Score**	***80***

Once all of the grades have been filled in to the concept scoring matrix using simple English values, Figure 3-8 is referenced again. The next thing to do is execute the fuzzy code. The fuzzy code will take the English worded grades and translate them into 1, 0.5, and 0 by using the shape functions, logical statements, and output functions as shown earlier. Next multiply the translated values by their prescribed weights as shown in the concept scoring matrix. Finally, sum up the four columns: Public Safety, Cost and Efficiency, Worker Safety, and Environment. The numerical scores are shown at the bottom of Table 3 4. Repeat this process for the remaining tools in the comparison set. A score of 100 is the maximum score any device can obtain, and scores generated from doing this are absolute. So far these scores are in no way related to those of the other

Copyright 2013, AHMCT Research Center, UC Davis

tools in the set. In order to achieve relative scores, the whole comparison set of equipment is normalized in a step that will be shown later.

The concept scoring matrix is filled out for the remaining pieces of equipment in the set (not shown here) and the raw scores obtained are shown in Table 3 5. To complete the equipment comparison, the next step is to select the highest score in each category/column and assign it a 10 and then normalize the rest of the tools against the best in the set.

Table 3-5: Sample Raw Scores for Comparison Set

	Public Safety	Worker Safety	Environment	Cost & Efficiency
Post Mower	**75**	**100**	**90**	**80**
Herbicides	**60**	**60**	**50**	**95**
Steam	**95**	**65**	**100**	**50**

Referring to the results contained in Table 3 5, it can be seen that steam has the highest score in the public safety column and, therefore, it will receive a ten for this category. For Worker Safety, mowing is the best so it will receive a ten. For Environment, steam is best so it will receive a ten. Finally for Cost & Efficiency herbicides are the best so they will receive a ten. The result of doing this can be seen in Table 3-6. The next step is to normalize the remaining scores relative to the performance of the tools which received a ten.

Table 3-6: Comparison Set High Scores Filled In

	Public Safety	Worker Safety	Environment	Cost & Efficiency
Post Mower		**10**		
Herbicides				**10**
Steam	**10**		**10**	

Normalization is a simple mathematical step, simply take the value of interest divide it by the highest score and multiply by 10. For Public Safety the post mower will receive 75/95*10 or a score of 7.9 and herbicides will receive a score of 60/95*10 or 6.3. For Worker Safety, herbicides will receive a score of 60/100*10 or 6.0 and steam will receive a score of 65/100*10 or 6.5. For the category called Environment, the post mower will receive a score of 90/100*10 or 9 and herbicides will receive 50/100*10 or 5. For Cost

Copyright 2013, AHMCT Research Center, UC Davis

and Efficiency, the post mower receives a score of 80/95*10 or 8.4 while steam receives a score of 50/95*10 or 5.3. All of these results are summarized in Table 3 7 for easy reference.

Table 3-7: Sample Normalized Relative Scores for Comparison Set

	Public Safety	Worker Safety	Environment	Cost & Efficiency
Post Mower	**7.9**	**10**	**9**	**8.4**
Herbicides	**6.3**	**6**	**5**	**10**
Steam	**10**	**6.5**	**10**	**5.3**

Using the scoring system as explained, all of the equipment in the toolbox was ranked and comments were added as appropriate. Keep in mind that in each case a 10 is considered the best score and 1 is the worst. The rankings are always relative within a comparison set for a specific scenario, and a score of 10 does not imply a particular piece of equipment is the best performance possible. In the future, as new and improved equipment becomes available, the scores of the old equipment will be ranked relative to any better technology that may exist. When adjusting the rankings for future technologies, only the normalizing step must be performed again because all of the steps previous to the normalizing step are on an absolute scale. In this way, future toolbox maintenance work required is reduced.

3.7.1 Vegetation Equipment Scores

The right-of-way (ROW) that Caltrans maintains extends from fence line to fence line on most highways found in California. The right-of-way area is broken up into many smaller sub areas, each with its own name so that workers can communicate easily.

Copyright 2013, AHMCT Research Center, UC Davis

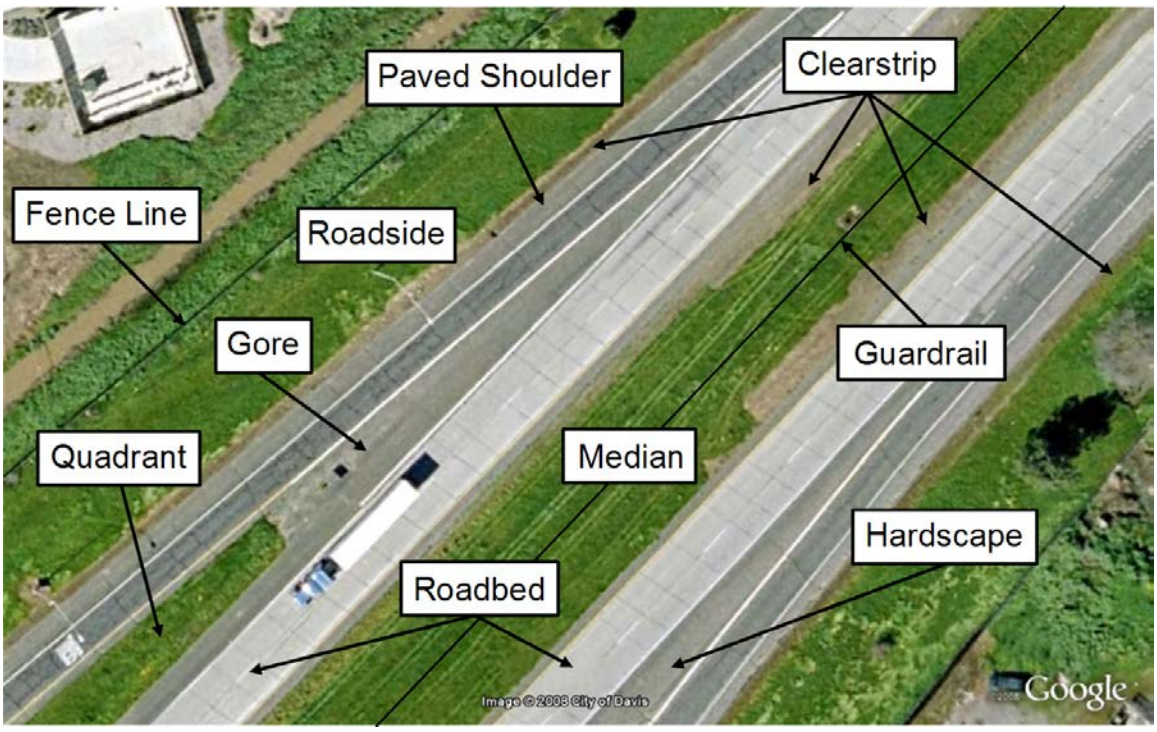

Figure 3-16 Areal View of Typical Highway [32]

Not all of the areas exist in all situations. Figure 3 16 is a typical highway scene with the various ROW categories labeled for easy reference.

The online toolbox contains all of the ROW categories shown in Figure 3-16 and also many different tools. This large amount of data would be impractical to recreate here. For simplicity only a subset of the equipment in the online toolbox is discussed in this section. Going over only a small subset is intended to show how the scoring works, and it gives an idea of how the toolbox works. The ROW categories can be simplified by considering some common traits between them. Simplifying and combining the ROW categories also has the side effect of generalizing results and perhaps showing more clearly how one tool can be used in multiple locations. In this section the ROW categories are combined into three groups for ranking purposes.

The first ROW category comparison group is Guardrails and Posts; these two maintenance tasks are very similar and the same equipment can generally be used. The key difference is the guardrails are usually shorter whereas posts are generally taller. This will only affect post mowers which are generally designed to clear a specific height.

Copyright 2013, AHMCT Research Center, UC Davis

The second ROW category comparison group is Clearstrips (includes fire strips), Roadsides, and Medians. These three distinct areas are lumped into one ranking because, disregarding any guardrails or posts they may contain (as covered in Table 3-9), they have similar attributes. Each is a relatively open area, and there is less need to use specialized equipment. These areas can generally accept a wider range of larger equipment such as tractors and trucks.

The third and final ROW category comparison group considered is Gore and Hardscapes. Hardscapes are actually a treatment and not officially a ROW category. A hardscape is a hard material placed on the ground in an effort to stop weeds from growing. These treatments are often found in small areas and can be decoratively patterned. The gore is the pointed area where two roadways merge or diverge; these areas are often hardscaped because it is difficult to get a large mower into the area. Since gores are usually hardscaped, and since hardscapes are usually found in relatively small areas, they will be lumped into one category for comparison purposes.

Before ranking all of the individual types of vegetation equipment, it is important to look at their relative costs shown in Table 3-8 [9]. These numbers were calculated based on the operating costs of the equipment, as well as the average salaries paid to the crews who operate them. The costs do not reflect the initial investment required to purchase the equipment itself. These costs are used in the Cost & Efficiency category of the toolbox for the vegetation control equipment. All costs are calculated per acre or hectare of land, and do not take into account extra time used to go around obstacles.

Table 3-8: Operation Cost of Various Equipment [9]

	Mowing	Herbicide	Steam/Foam	HP Water	Heat
Cost Per Acre [$]	**18.86**	**19.15**	**49.51 - 72.42**	**99.33**	**22.17**
Cost Per Hectare [$]	**46.64**	**47.32**	**123.07 - 178.94**	**245.44**	**54.79**

These costs represent typical situations with no obstacles, so they may be adjusted somewhat to take into account extraordinary circumstances. Note that the Steam/Foam category has a range, the lower end of the range is for just steam the higher end is for

Copyright 2013, AHMCT Research Center, UC Davis

steam with the foam additive included. Also, these values assume off the shelf equipment that can be purchased now. Some of these technologies may benefit from mechanization thus lowering their overall operating costs [9] but that is not considered in the toolbox.

The first set to be considered is Guardrails and Posts, because this is a very common feature on roadways of all types. As can be seen in Table 3 9, steam ranks at the top of the list for public safety. Steam has no hazardous byproducts and leaves no toxic residues after it has dried. Another benefit of steam is that its heat quickly dissipates with distance, thus posing little threat to nearby pedestrians. Mowing ranks best for worker safety; this is primarily because the blades and cutting mechanisms are contained within safety shrouds minimizing worker safety equipment required.

Table 3-9: Guardrails and Posts Vegetation Rankings

	Mowing	Herbicide	Steam	HP Water	Heat
Public Safety	**7.9**	**6.3**	**10**	**8.9**	**6.8**
Worker Safety	**10**	**6**	**6.5**	**6.5**	**9**
Environment	**9**	**5**	**10**	**8.5**	**8**
Cost & Efficiency	**8.4**	**10**	**5.3**	**5**	**8.4**
Comments	**Guardrail mower**	**Bad Public Opinion**	**Results seen in 3 or 4 days**	**May cut anything it contacts**	**Some fire hazard**

With steam, high pressure water and herbicides, shrouds are usually not a viable option. For the category called Environment, scores are a bit closer, but steam does have an advantage because of the low risk of runoff combined with no risk of fire and no chemicals. Herbicides are the most cost effective because of their relatively low application cost, high application speed, and low need to reapply after initial treatment. When mowing a special guardrail/post mower is desirable to improve efficiency and lower cost.

The second set to be considered is Clearstrips, Roadsides and Medians. These areas generally contain larger amounts of space than the guardrails and posts above. Steam once again ranks at the top of the list for Public Safety. In the Worker Safety category

Copyright 2013, AHMCT Research Center, UC Davis

Herbicides ranks above Steam and HP Water. This is due to the large open areas involved in this set which allows the sprayer truck to move quicker and limits worker exposure time. The larger areas will require more water to be used by both the high pressure (HP) water systems and steam. More water usage increases the risk of runoff and so in the Environment category HP Water scores a bit lower than before. For Cost & Efficiency, herbicides score the best due to the fast application speeds associated with a sprayer truck in a wide open area. A summary of the results can be Table 3 10.

Table 3-10: Clearstrips, Roadsides, and Medians Vegetation Rankings

	Mowing	Herbicide	Steam	HP Water	Heat
Public Safety	**8.9**	**6.3**	**10**	**8.9**	**6.8**
Worker Safety	**10**	**7.5**	**5**	**5**	**9**
Environment	**10**	**5.5**	**9.4**	**7.8**	**8.9**
Cost & Efficiency	**8.4**	**10**	**5.3**	**5**	**8.4**
Comments	**Readily Available**	**Bad Public Opinion**	**Results seen in 3 or 4 days**	**May cut anything it contacts**	**Some fire hazard**

The third set to be considered is Gore and Hardscapes as seen in Table 3 11. A hardscape is any kind of hard material (concrete, asphalt, brick, tile, etc) that is placed on the ground to prevent weeds from growing. Hardscape works well when new, the problems arise when it ages and begins to crack, which allows weeds to grow between the cracks making maintenance more difficult than bare ground. The gore is the small triangular area formed at the intersection of a roadway and a type of on ramp which is often hardscaped. In order to score well equipment in this category must be highly maneuverable and able to remove plants from cracks in the hardscape without damaging the hardscape itself.

Table 3-11: Gore and Hardscapes Vegetation Rankings

	Mowing	Herbicide	Steam	HP Water	Heat
Public Safety	**8.5**	**6**	**10**	**7.5**	**8**
Worker Safety	**8.3**	**6.6**	**6.6**	**5.5**	**10**
Environment	**10**	**5**	**9.5**	**9**	**9**
Cost &	**8.4**	**10**	**6.3**	**5**	**8.4**

Copyright 2013, AHMCT Research Center, UC Davis

Efficiency					
Comments	**May be difficult to turn around**	**Bad Public Opinion**	**Results seen in 3 or 4 days**	**May cut anything it contacts**	**May be difficult to turn around**

As seen in Table 3-11, steam ranks the best for public safety. For Worker Safety, Heat moves up to the top spot. Heat has the distinct advantage of keeping workers in a vehicle, even when working in hardscaped areas. All of the other systems in this set require a worker to exit the vehicle exposing them to hazardous traffic. Mowing is the best in the Environment category followed closely by HP Water and Heat. Once again Herbicides is the scored the best for Cost & Efficiency. Currently, no alternative equipment can replace herbicides from a cost standpoint, but it may be appropriate to discount herbicides advantage in this regard since Caltrans is under a mandate to lower herbicide usage.

3.7.2 Debris Equipment Scores

Debris equipment will be scored in this section. The ROW is broken up into smaller categories as in the vegetation equipment scoring. Also, as in the vegetation equipment scoring, some of the ROW categories have been lumped together because of their similar attributes. This allows for equipment to be generalized and adapted for a wider range of areas. This also simplifies the equipment scoring by requiring less discrete comparisons to be made. In the online version of the toolbox, more refinements may be made as appropriate.

The first comparison set considered is Guardrails and Posts. Both guardrails and posts pose very similar challenges and thus the equipment designed for them can generally be used interchangeably. The key difference is that posts can be much taller than guardrails and so some equipment designed to reach over guardrails may not work with all posts. The results of this comparison set ranking can be seen in Table 3-12.

Table 3-12: Guardrails and Posts Debris Rankings

	Vacuum	Sm. Raking	Lg. Raking	Robotic Arm
Public Safety	**10**	**7.9**	**9.5**	**10**
Worker Safety	**10**	**7.5**	**6.5**	**7.5**

Copyright 2013, AHMCT Research Center, UC Davis

Environment	**10**	**7.6**	**7**	**7.6**
Cost & Efficiency	**10**	**8.9**	**8.6**	**6.1**
Comments	**Particulate Escape Hazards**			

It is not surprising that vacuum equipment scores the best here for Cost & Efficiency, because this equipment is the only type that can easily reach around posts and collect debris in small areas. One such vacuum system particularly well suited to this task is the ARDVAC. Vacuums also are the top ranked in the Environment category. Vacuums score the best because they are the only systems that have the ability to reach into the small places around and between posts to collect trash. Related to the vacuum systems ability to reach into small areas is the ability to keep workers in the truck and out of harms way. Since workers will not be required to leave the vacuum vehicle to manually pick up trash vacuum equipment gains an advantage in the Worker Safety category. Finally, for Public Safety, vacuums and robotic arms tie with raking devices falling behind. Raking equipment scores lower primarily because raking systems require contact with the roadway and therefore must contribute to wear and damage more than vacuum systems or robotic arms.

The next set of categories to consider is Clearstrip, Roadside and Median. These areas are relatively open and can accept larger pieces of equipment such as tractors and trucks. The results of their rankings can be seen in Table 3-13.

Table 3-13: Clearstrip, Roadside, and Median Debris Rankings

	Vacuum	Sm. Raking	Lg. Raking	Robotic Arm
Public Safety	**10**	**8.5**	**8.5**	**10**
Worker Safety	**6.5**	**9**	**10**	**8**
Environment	**9.4**	**10**	**6.1**	**6.7**
Cost & Efficiency	**6.6**	**10**	**9.7**	**5.3**
Comments	**Particulate Escape Hazards**			

Copyright 2013, AHMCT Research Center, UC Davis

In this set, vacuum and robotic arm type pieces of equipment maintain a clear advantage in the Public Safety category. For Worker Safety, large raking machines are ranked the best followed closely by small raking machines. Raking type machines score high here because they are easy to use in large environments and bring about low worker fatigue. For the Environment category, small raking machines have the advantage of being less likely to impact the soil while still maintaining a high level of debris cleanup. For Cost & Efficiency, both small and large raking systems are very similar. Small raking machines are ranked slightly higher because of their improved ability to pick up smaller items than the large raking machines.

The third, and final debris group considered, is Gore and Hardscapes. These two are combined because they are both usually relatively small in area; also gores are generally hardscaped. Hardscapes are actually a treatment and not technically a category; and can be any place that is covered with a hard and possibly decorative material, with the intention of stopping weed growth. The results of the ranking can be seen in Table 3-14.

Table 3-14: Gore and Hardscape Debris Rankings

	Vacuum	Sm. Raking	Lg. Raking	Robotic Arm
Public Safety	**10**	**7.5**	**8.5**	**10**
Worker Safety	**9**	**10**	**7.5**	**6.5**
Environment	**8**	**10**	**10**	**5**
Cost & Efficiency	**9.4**	**10**	**9.1**	**5**
Comments	**Assuming $PM_{2.5}$**			

In this category, vacuum systems and robotic arms once again score the highest in Public Safety, this primarily because of the inherently low fire risk. Raking type tools always have a chance to generate sparks when scratching over hard surfaces. Small raking devices are the best for Worker Safety; largely because of the ability to fit into the smaller areas easily and limiting worker fatigue. For the category entitled Environment, large raking and small raking machines are tied, they both do a relatively good job of minimizing leftover debris and are not plagued by particulate matter escape like a vacuum truck. Finally, in Cost & Efficiency, small raking machines score highest. These

Copyright 2013, AHMCT Research Center, UC Davis

machines score well because they are able to maintain a balance between maneuverability in small areas while still collecting debris is a quick manner.

3.8 Using the Toolbox

As mentioned earlier, the toolbox offers a broad view of the current state of equipment. Offering a broad view of anything has distinct advantages. In this case it allows the user to quickly see possible weak areas in the current state of tool development. The ability to see weak areas in tool development can be employed for use in tool design. In order to achieve this, a user must identify the potentially weak area and then develop a new tool that would be well suited to that area. One such weak area of development in the field of vegetation control concerns tumbleweeds. Though a specific category for tumbleweeds is not present in the toolbox, it is clear that none of the equipment contained within it is suited to collecting tumbleweeds.

As seen in Chapter 1, tumbleweeds pose a very real problem in the field of vegetation maintenance. Tumbleweeds can blow onto roads and cause traffic congestion or vehicle crashes as drivers try to avoid hitting them. Out of all the tools contained within the toolbox master equipment list, it is apparent that only a few could possibly be used to deal with this problem. Tumbleweeds are too large for vacuum equipment to suck up, they cannot be mowed, and herbicides cannot help. The only equipment that may be helpful is found in the debris control section. Tools such as a grapple truck or the DRV may be able to collect tumbleweeds, but that would be a slow and inefficient process. Research into this problem found that AHMCT did have a concept for a tool that might work in the removal of tumbleweeds from roadways. This is the Tumbleweed Processor attachment for the ARDVAC system. The concept tool was never completed and parts of the design had to be reworked to make it viable. In chapter 7, the existing tumbleweed tool will be analyzed and redesigned in preparation for prototype production.

3.9 Conclusion

In this chapter the toolbox was introduced. As a prerequisite to the toolbox the project stakeholders were identified as well as their specific interests in the project. A walkthrough of the toolbox was given, showing the general structure, layout, and operation of the toolbox. Next, the fuzzy scoring system was developed, and some

Copyright 2013, AHMCT Research Center, UC Davis

sample calculations were done to show how each tool in the toolbox is ranked. A set of equipment was scored for major right-of-way categories, and the results were discussed. A discussion about how the toolbox can be used as a tool to identify areas for research and development is included, and tumbleweed removal from roads was identified as an example weak area that the toolbox indicated could use more research. Finally, the idea of the Tumbleweed Processor attachment for the ARDVAC was introduced as a possible solution to the tumbleweed removal problem that the toolbox had indicated. This attachment and two other vegetation removal tools for use with the ARDVAC are developed in the following chapters.

Copyright 2013, AHMCT Research Center, UC Davis

CHAPTER 4: VEHICLE BASED LITTER AND DEBRIS REMOVAL

4.1 ARDVAC

In 2001, the ARDVAC concept was first developed by AHMCT [40] to fill a niche in small litter and debris removal along California's roadways that are not accessible by other mechanized equipment, such as a street sweeper or a vacuum truck alone. It is intended to supplement or altogether replace the labor-intensive task of manually collecting trash along roadways. The ARDVAC is an automated, telerobotic vacuum nozzle positioning system designed to be mounted on the overhead boom of a commercialized mobile vacuum truck, such as the one in Figure 4.1.

Figure 4-1 VACALL Vacuum Truck [41]

Throughout the design of the ARDVAC, VACALL Industries (Leach Company) provided support for its development though information exchange and the use of a test vehicle. Currently, Caltrans is testing a second generation ARDVAC manufactured by VACALL under license. A picture of the prototype ARDVAC and the VACALL vehicle can be seen in Figure 4-2.

Copyright 2013, AHMCT Research Center, UC Davis

Figure 4-2 ARDVAC Evolution

The ARDVAC is intended for use along medians, bushes, shoulders, around guardrails, and on embankments on the roadside within the ROW and is designed to have the ability to pick up both light and some heavier debris. This would include objects such as paper, food packaging, aluminum cans, glass bottles, pieces of rubber tires, vegetation, and loose surface soil. It is not designed to vacuum up liquid in large quantities such as mud at the bottom of a culvert nor is it designed to pick up any large rocks.

4.1.1 Other Vehicle Based Debris Removal Methods

Besides the use of off-the-shelf vacuum trucks or the ARDVAC attachment in the debris removal role along highways, there are two other vehicle based debris removal devices development in association with AHMCT. They also have a potential to improve the speed and efficiency of debris removal. Both are similar in concept and take a different approach to debris removal as compared to vacuum trucks and the ARDVAC attachment. Both devices also share a common name. One device is called the Debris Removal Vehicle (DRV) and the other is called the Debris Removal Attachment (DRA). Instead of cleaning up the debris directly, both devices are designed to remove pre-bagged debris (done by Caltrans or Special Programs workers) and larger debris, such as tires and small furniture left along the Right of Way (ROW).

Copyright 2013, AHMCT Research Center, UC Davis

Figure 4-3 Debris Removal Vehicle in action

The vehicle-based DRV can be seen in Figure 4-3. As mentioned earlier, this vehicle is designed to lift litter bags and larger objects using its hydraulic clamshell-type arm. It is designed to have the ability to lift 45.4 kilograms (100 pounds) [42]. However the vehicle has shown that it can lift substantially more. The main advantages to this vehicle over traditional pick-up methods is that workers remain safely in the vehicle, improvement in efficiency, many degrees of freedom to pick up objects both 1.22 m (4 ft) above and below the ground level of the vehicle as well as side to side, and that only one worker is needed to drive and operate the arm [43]. Its disadvantage is that it is an expensive vehicle dedicated to this single task.

Figure 4-4 Debris Removal Attachment and Clamshell Action

Based on concept development work being done at AHMCT [43], the DRA is designed as a removable attachment to a modified Caltrans pickup truck. It is intended to capture debris using a side mounted independent clamshell bucket similar to the DRV as can be seen in Figure 4.4. This clamshell would raise the debris above the bedrails of the truck

Copyright 2013, AHMCT Research Center, UC Davis

and dump the debris into the bed for transport. The controls will be simple to operate and again only need a single operator in the vehicle. Furthermore, the main benefit of the DRA is that it will be a low cost ($5,000-$10,000) package and will also have minimal impact of the rest of the truck's functions as compared to the DRV, which is a dedicated vehicle.

4.2 Expanding ARDVAC Abilities

In 2002, AHMCT saw an opportunity to expand the ARDVAC's operational envelope. A vehicle that can perform many tasks is much more valuable to Caltrans than a single purpose vehicle. The ARDVAC could be adapted to perform vegetation removal operations, this added functionality could be of great value by maximizing the use of the vehicle. This concept would combine the traditionally separate tasks of cutting and collection, further saving time, money and crew exposure.

Richardson [33] first began research into this concept. He looked at highway environments throughout the state and discussed the problems and methods for their control. After developing design objectives for the new devices, such as maintaining the one man operation of the attachment, minimizing cost, and designing the attachment to be more productive than current methods, Richardson created some technical requirements and limits for the attachments. They are:

- Size is limited to 61 cm (2 ft.) from the center of the ARDVAC nozzle
- Weight should be kept below 34 Kg (75 lbs) due to the trucks boom
- Handling power of the attachment should be at least 1.9 cm (3/4 in) of cutting capability
- Compare processing rate to current volumetric average
- Cost should be kept to $5,000 or less
- Safety of the workers around the attachments must be maintained
- Power requirements be kept below 18.64 kW (25 Hp)
- Noise should be considered
- Final design/s should be robust

Copyright 2013, AHMCT Research Center, UC Davis

From this he created a Quality Functional Deployment (QFD) Matrix to assign relative weights to these technical requirements. This allowed him to study and subjectively compare various types of light-duty and heavy-duty machines already on the market for vegetation processing. He also created many units of measure to compare various maintenance implements. This included cost per kilowatt, gauge of material which can be cut, power to weight, possibly the single most useful called power to weight per dollar. This last measure found that both the manual hedger and then the string trimmer are head and shoulders above the rest of the competition. From this study, the groundwork requirements for future ARDVAC attachments were established and possible machine types identified.

Further studies were conducted by AHMCT to determine the minimum cutting head rotational velocities required to clean shear hardwood doweling which helped the attachment designs to establish power, and rpm requirements.

4.3 Current Vegetation Control Standards

California roadways run through some of the most diversified landscapes in the world. A look at the variety of vegetation will not be covered; however, other AHMCT theses can be referenced for more information. Caltrans is tasked with maintaining all of the features within the ROW for many reasons. First and foremost, vehicles must be able to use the roadway; however, beyond this their goals are “to maintain visibility of traffic control devices, to reduce the risk of fires starting along the roadside, to protect pavement surfaces, to control noxious weeds, to prevent erosion, to limit stormwater pollution, to protect sensitive species, and to improve aesthetics [44].” Caltrans has many guidelines for vegetation within the ROW. A brief overview will be covered below to more fully understand the performance expected of the ARDVAC attachments.

In general, Caltrans only performs the work totally necessary to meet these goals due to the constant shortage of maintenance resources. Caltrans has recognized the strain that vegetation control puts on the system and has suggested that roadway design of the entire ROW, not just the roadbed, be more standardized [2]. Specifically, this would be accomplished by planting vegetation that requires less maintenance and to develop improved vegetation management strategies. Rebuilding the entire ROW would take

Copyright 2013, AHMCT Research Center, UC Davis

decades, so until then there is a need for the ARDVAC and all of its attachments to quickly and efficiently work to keep California's roads safe for traffic. Furthermore, the most significant issue affecting the need for vegetation control is "the design of the shoulder edge as it transitions to the roadside [44]." Due to these details, the remainder of this report will focus on both the shoulder and the closely related median because this is where the ARDVAC is tasked with working.

Along the shoulder edge and medians wider than 11 meters (36 feet), a control strip (fire protection) up to 2.5 meters (8 feet) wide ought to be considered [44]. If these areas are sloped beyond 4:1, the control strip can be reduced to 1.2 meters (4 feet) [44]. Around guardrails and posts, as well as inlets to ditches and culverts, vegetation should be maintained for safety, aesthetics, and to ease drainage [44]. All brush and trees should be maintained 2.7 meters (9 feet) from the edge of the pavement. Furthermore, in groundcover maintenance/mowing operations, it is not desirable to mow vegetation to a height less than 15 cm (6 in) [44].

To meet these vegetation control guidelines, Caltrans employs a wide variety of methods. These can include biological, chemical, manual, mechanical, structural, and thermal [44]. Biological and cultural methods are used in very specific cases and do not generally apply to areas in question above. Chemical methods have in the past been heavily used, but have recently fallen out of favor. More on chemical means will be covered in the next section. Manual and mechanical means are the prime method for most vegetation control. Manual control could include the use of hand power tools, such as a string trimmer, and non-power tools, in addition to hand pulling of weeds. Mechanical means are typically tractors and other mowing devices. Structural and thermal are both developing methods that show promise. Structural methods use mats or even pavement to simplify vegetation control by creating hardscapes where there is no vegetation. Thermal methods use heat, or steam to kill the plant. Currently, thermal is not industrialized enough to warrant widespread use but does work in small applications.

The ARDVAC attachments will focus on replacing the traditional manual and chemical tasks with mechanical ones to more efficiently control vegetation and to meet the Herbicide Reduction Mandate by Caltrans.

Copyright 2013, AHMCT Research Center, UC Davis

4.3.1 Herbicide Reduction Mandate

In 1987, per Caltrans policy, chemicals such as herbicides were the preferred method for maintaining clear strips along the edges of the roadway for fire protection. However after a 1992 Environmental Impact Report found herbicides were safe in this use, negative public opinion developed and Caltrans decided to reduce the amount of herbicides they used [44]. They set goals to reduce its use by 50 percent by 2000 and to have an 80 percent reduction by 2012 as compared to 1992 levels [44]. The 2000 goal was met in July of 2000.

This increasing non-reliance on chemical means has opened the door for other methods of control such as mechanical, structural, and even thermal, not previously used in this capacity. Herbicides are currently forbidden from being used where they may leach into any water supply or drainage.

4.4 ARDVAC Vegetation Attachments

A meeting took place between Caltrans Office of Roadside Maintenance and AHMCT on September 2, 2003 which established specific vegetation control maintenance needs. These needs are summarized below:

1. Cut, edge, and remove Ice Plant and Ivy (types of landscape groundcover) present on interstate on and off-ramps and overpasses.
2. Remove vegetation under and around guardrails.
3. Remove vegetation and subsequent clippings from V-type ditches and canals (herbicide use is undesirable in this application because of possible contamination of water that farm animals drink).
4. Cut vegetation in a 1.2 m to 1.8 m (4ft to 6 ft) swath next to the right-of-way for fire prevention (where the fire is often started from a used, discarded cigarette).
5. Adapt different types of cutting heads to the ARDVAC without having to manually change them.
6. The maximum after-cut height of vegetation should be no more than 15 cm (6 in)

Copyright 2013, AHMCT Research Center, UC Davis

7. Vegetation growing out of a crack (in the road surface) needs to be removed all the way down to the road surface.

8. Eliminate loose and/or rooted problematic tumbleweed.

To meet the above desires, no one cutting attachment could perform all of these tasks. By using an iterative process, Harker, McPhee, and Bieniek determined that three cutting attachments concepts needed to be developed [35]. They are the Rotary Impact Cutting Fixture (Rotary Cutter), The Hedge Trimmer Cutting Fixture (Oscillating Cutter), and the Tumbleweed Shredder. By creating multiple cutting attachments for the ARDVAC, they partially satisfied need number five above. A design for an automatic tool changer was created by Chew [45] in 2006, though a physical prototype was never built and is on hold until testing of the three fixtures is completed. The Rotary Cutter is designed to meet the requirements of one, two, and six above. Meanwhile the Oscillating Cutter will meet three, four and six. The Tumbleweed Processor will obviously meet the needs of requirement eight. The only requirement not met by the three attachments is seven, which would require another fixture or a roadbed design change that can stop weeds from growing through cracks.

4.4.1 Rotary Cutter

Based on the horizontal three cutter array originally created by Richardson and Latham, Harker [46] further developed the hydraulically-powered rotary cutter. By using three pairs of free-swinging blades instead of cutting string trimmer string, the blades' cutting ability is increased and the life of blades compared to string trimmer greatly increases its usefulness in maintenance operations. Furthermore, by using the same dowel pin and lift pin bearing from the ARDVAC Cylinder Pivot Flange, the Rotary Cutter can easily attach to the ARDVAC. Furthermore, the Rotary Cutter also has the ability to perform vertical cutting. This is accomplished by one of the cutters which has the ability to articulate 90 degrees allowing for edging operations. A 3-D image of the Rotary Cutter can be seen in Figure 4-5

Copyright 2013, AHMCT Research Center, UC Davis

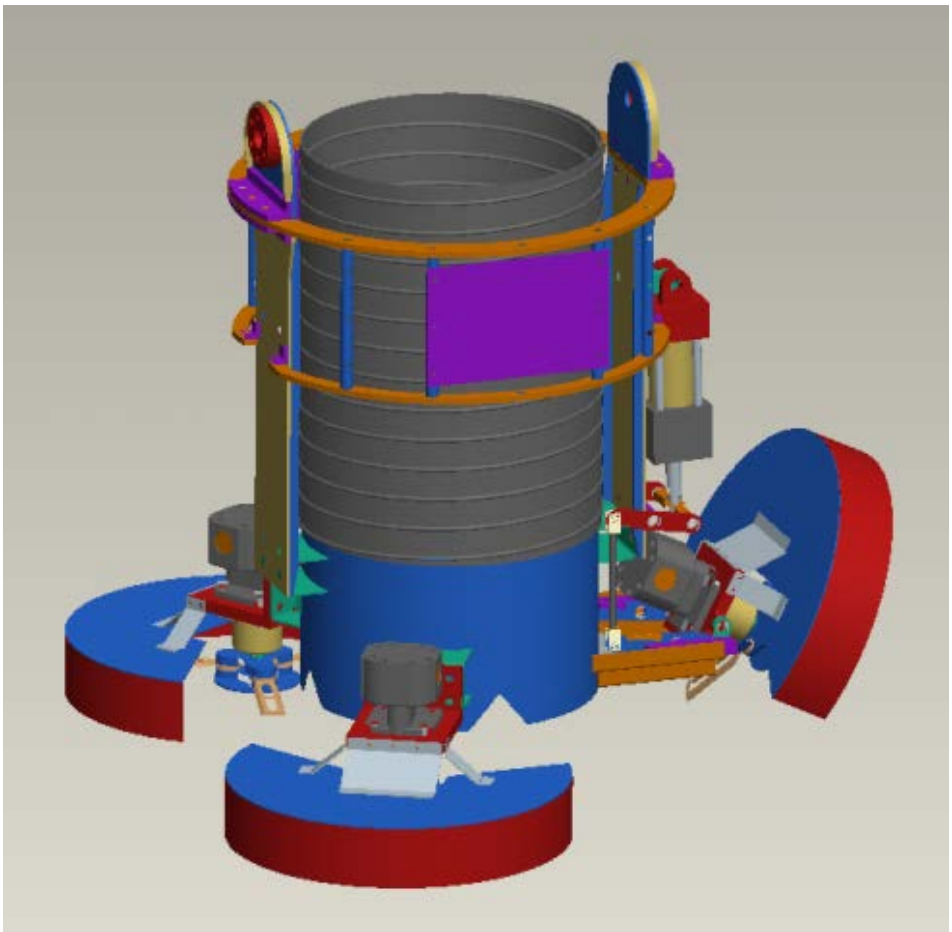

Figure 4-5 Rotary Impact Cutter

4.4.2 Oscillating Cutter

McPhee developed the Oscillating Cutter, as seen in Figure 4-6, to take advantage of its high power to weight per dollar value as found by Richardson in his research. The cutter uses two modified STIHL HL adjustable hedge trimmers. One trimmer can be adjusted manually from its vertical storage state to horizontal running position, and also has the ability to rotate whenever that trimmer is running. The other trimmer is hydraulically actuated from vertical to horizontal, but is not allowed to rotate. When both trimmers are down and the one trimmer is rotating, the Oscillating Cutter will be able to cut a 2.1 meter (7 foot) swath. With the actuated raising and lowering, it should be able to perform cutting operations in ditches, along slopes, and trim bushes usually planted in the median or shoulder. Both the Oscillating Cutter and Rotary Cutter share the same frame/nozzle design and attach in the same way to the ARDVAC.

Copyright 2013, AHMCT Research Center, UC Davis

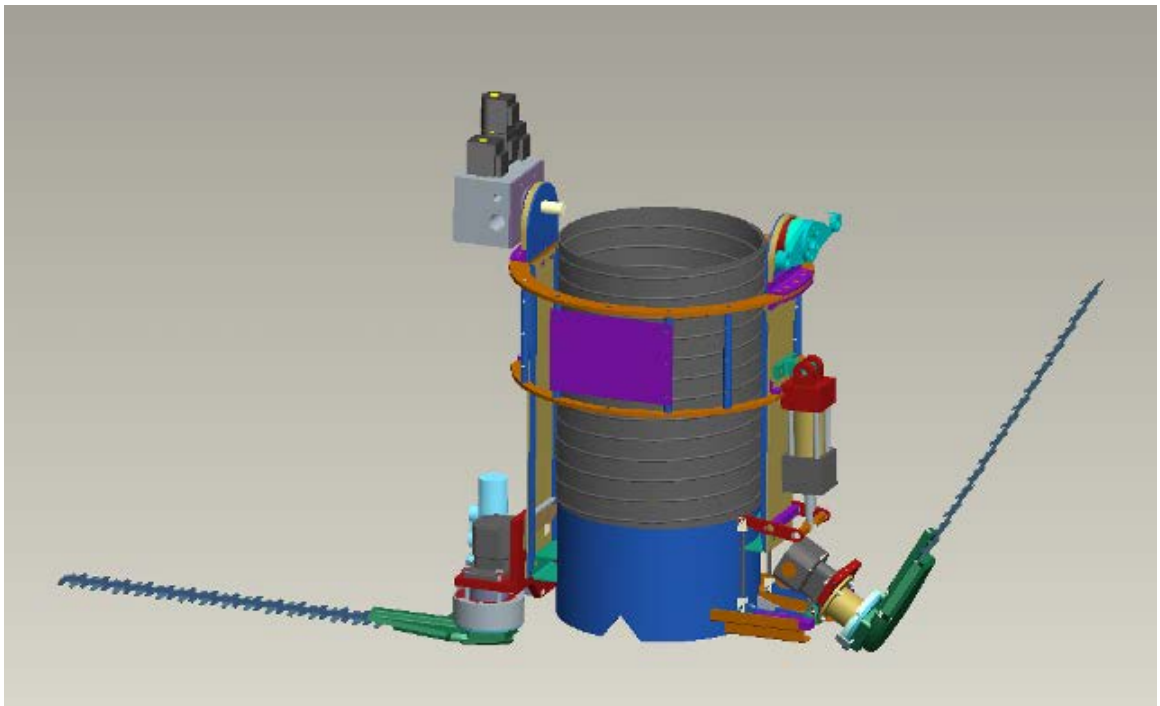

Figure 4-6 Oscillating Cutter

4.4.3 Tumbleweed Shredder

First developed by Bieniek, the Tumbleweed Shredder has a very specific purpose of picking up, shredding, and collecting tumbleweeds. Testing may show that it even has the ability to uproot tumbleweeds. This device consists of a main housing enclosing a cutter assembly, and four arms that as a whole attach to the ARDVAC system as seen in Figure 4-7. The four arms are interconnected and open and close uniformly in a claw like manner using a hydraulic cylinder. Two of the four opposing arms have a hydraulically run conveyor belt designed to draw a tumbleweed into the housing. In the housing, there are two shredding wheels run by a single hydraulic motor designed to chop the tumbleweed into pieces which is then vacuumed up into the ARDVAC.

Copyright 2013, AHMCT Research Center, UC Davis

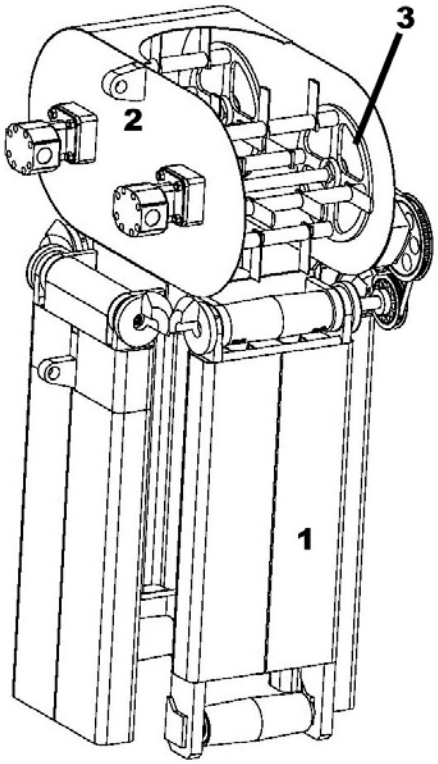

Figure 4-7 Tumbleweed Shredder - 1) Arms, 2) Housing, and 3) Cutter Assembly

4.5 Conclusion

This chapter provided an overview of the ARDVAC and the vegetation cutting tools known as the Rotary Cutter, Oscillating Cutter, and Tumbleweed Shredder. It describes the potential ARDVAC operations of vegetation control along the road edge. It also provided a description of two additional truck based machines used to collect debris. One device is known as the Debris Removal Vehicle and the other is the Debris Removal Attachment.

Copyright 2013, AHMCT Research Center, UC Davis

(BLANK PAGE)

Copyright 2013, AHMCT Research Center, UC Davis

CHAPTER 5: TEST FIXTURING AND PREPARATION

5.1 Chapter Summary

First the in-house test fixture used to hang the ARDVAC and subsequent attachments will be described. Next, the hydraulic power supply and electrical system integration will be shown. Following this, the necessary steps to ready the attachments for testing are discussed. Finally, any additional modifications made to the attachments will be shown.

5.2 Test System Overview

In order for the ARDVAC to operate at its full capability, it needs to have four things: a structure to hang from, a hydraulic power supply, an electrical power supply, and a vacuum system. Typically, commercialized vacuum trucks for which the ARDVAC is designed have all of these features; however, due to constraints in space and time it was decided that in-house testing would not use a vacuum system. Such a system would normally comprise of a fan, particulate filter, and debris bin. Future road tests with the ARDVAC vehicle will be left to evaluate vacuum performance of the attachments.

The three remaining subsystems will comprise the in-house test system. Figure 5-1 shows an idealized top view of the test setup. The figure shows the general layout of the components as well as the dimensional constraints imposed on the support structure by the location of the concrete pillar.

Copyright 2013, AHMCT Research Center, UC Davis

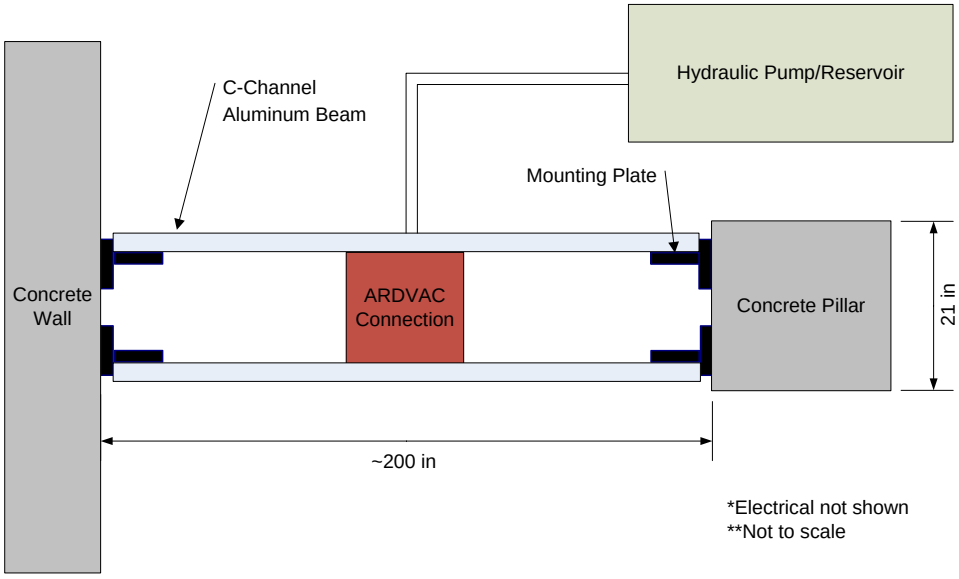

Figure 5-1 Idealized Top View of Test Setup

Three components make up the test structure. These are the two parallel beams, four mounting plates, and the ARDVAC connection bracket. The ARDVAC will mount beneath this connection bracket using the same bolt circle used to mount it to the boom of the ARDVAC vehicle. The hydraulics and electrical systems will be run from the top support structure down to the ARDVAC's manifold so that it will not interfere with any of the motions.

5.2.1 Support Structure Overview

The decision was made to use a beam or beams to span the distance between a pre-existing concrete pillar and building wall. The test setup structure used at this location primarily must allow space for all the necessary motions of the ARDVAC and vegetation attachments. In this case, the motions allowed for the ARDVAC are both of the sweeping motions (5 and 7), as well as the telescoping motion (6) that can be seen in Figure 3.2. All of the vegetation attachments have the ability to use all of their ranges of motion.

Copyright 2013, AHMCT Research Center, UC Davis

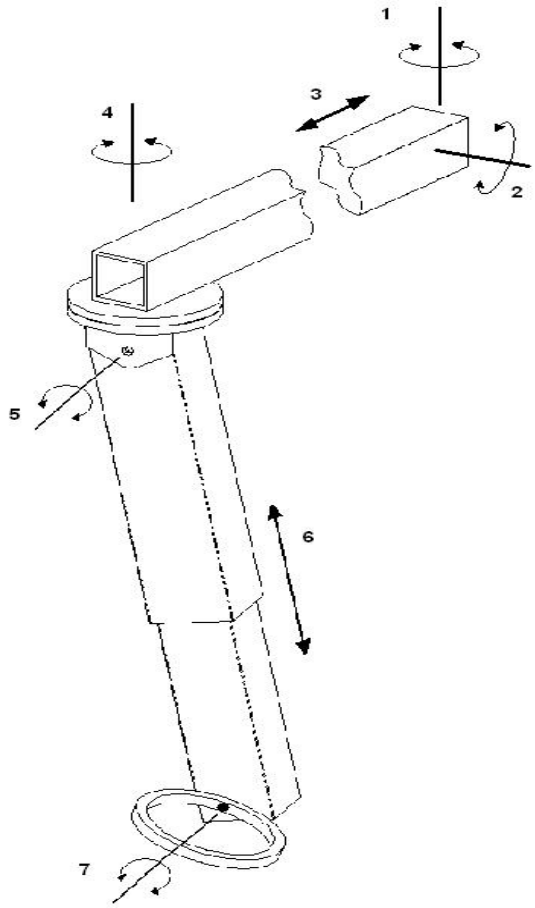

Figure 5-2 ARDVAC Motion Axes

Three components that make up the test fixture are the support beam, wall mounting plates, and ARDVAC Connection bracket. Each of these components was designed to ensure the safety of the equipment and test operators. Loading and stresses were analyzed and documented.[50]. Figure 5-3 is shows what the final version of the test structure looks like with ARDVAC and Oscillating Cutter mounted beneath it.

Copyright 2013, AHMCT Research Center, UC Davis

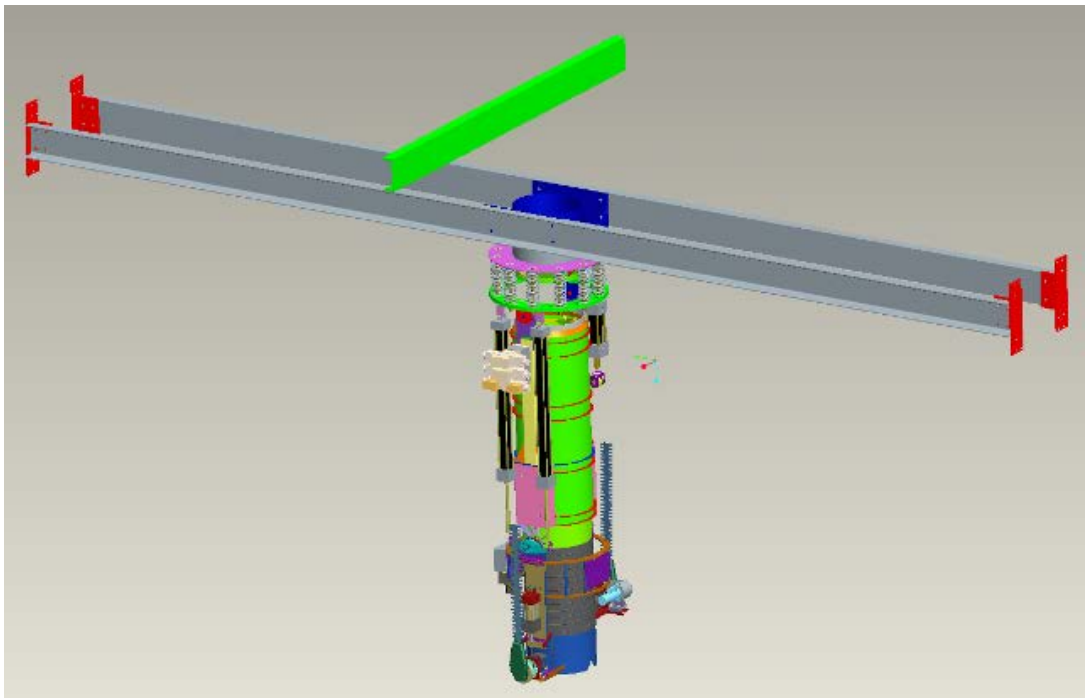

Figure 5-3 Completed Test Structure with ARDVAC

5.2.2 Hydraulics System

Once the Test Structure was assembled and the ARDVAC mounted, the hydraulics system could be finished. First, the ARDVAC's hydraulic manifold, complete with directional control valves, was found to have been previously removed from between the two parallel long cylinders and needed to be remounted. It is decided that the location should be changed around to the opposite side by the short cylinder. This would free up clearance concerns that were present at the original location when the ARDVAC is swinging and would be easier to run lines from the hydraulic power supply as they would now be facing each other. In a departure from original design, the hydraulic supply and return lines between the upper and lower manifold (for the attachments) are placed in series instead of in parallel as originally conceived. This layout makes sense for testing because there will be fewer hoses and chances for them to catch. On the other hand, on the production ARDVAC, the manifold is in the boom, not on the ARDVAC; therefore, parallel connections would make sense.

Next, hydraulic lines were fitted from the ARDVAC's manifold to its three cylinders and supply lines were run from the hydraulic power supply motor to the manifold. In both cases of hose fitment, hoses and fittings were scavenged from stock supplies and

Copyright 2013, AHMCT Research Center, UC Davis

made to work even if the optimal fitting or hose length was not available. They were checked to ensure sufficient flexibility throughout their ranges of motion and sized accordingly to common hydraulic hose diameter/flow charts readily available. In cases where the optimal diameter is unavailable, the next larger size is used with the only downsides being a reduced bending radius and added weight of the hydraulic fluid. Furthermore, the ARDVAC's system operating pressure for the hydraulics is 1500 psi and all of the hoses were checked to see that they at least met this requirement.

5.2.3 Electrical System

Finally, the last remaining element to run the ARDVAC can be installed. The electrical system is fairly simple. A power supply provides power to the joystick, which in turn controls all of the ARDVAC's motions. On the ARDVAC's hydraulic manifold, also called the upper manifold, each of the three fluid circuits have a solenoid operated directional control valve that controls the fluid flow and pressure, hence the motions. Each of these operates on a 24 V DC electrical signal provided to it by the joystick and its controller circuit, which itself is contained within the joystick box. This allows for proportional control of the ARDVAC's motions. Some components within the controller circuit have a 12 V DC need. Due to this, two 12 V DC power supplies are used in series to meet the power requirements. To connect the joystick and directional control valves on the ARDVAC, a 25 wire conduit was run and attached using a DB25 connector.

Having a 12 V DC system already in place for the ARDVAC is also convenient for cutting attachments because they use a 12 V DC system to actuate their solenoid cartridge valves on each of their manifolds. These solenoids are not proportional and are only on or off. In order to use these, a simple switch box is created. It includes a power switch and indication light, two two-position switches, and two three-position switches. This will enable the box to switch all of the solenoids on the vegetation attachments and still retain an extra switch for another unforeseen use. The vegetation control box is connected to the vegetation attachment through a 7 wire conduit and a set of 7-pin AMP Series I connectors.

Finally, combined with the test structure, ARDVAC, hydraulic supply, and now the electrical, testing can begin on the ARDVAC to ensure it is operating correctly before

Copyright 2013, AHMCT Research Center, UC Davis

any attachments are used. Before the attachments can be used, they too must be readied as they were mostly mechanically built, but lacked any hydraulic or electrical plumbing.

5.3 Finishing the Attachments

With the ARDVAC now ready to run as the test structure, hydraulics, and electrical are now finished, the only remaining piece to the puzzle are the vegetation attachments. Both the Rotary and Oscillating Cutters were found in a near complete, mechanically assembled state. Meaning much of the structure and motors had been assembled; however, very little of the hydraulics or electrical had been finished. The outfitting of these will be covered in this section. Concerning the Oscillating Cutter, major items that needed to be finished were the placement of the hydraulic manifold, placement of the three adjustable pressure compensated flow control valves, hydraulic lines, and electrical wiring. It is decided that the manifold and two flow control valves for the rotating cutting head will be mounted on the two opposing hydraulic mounting plates built into the mounting ring on the cutter. This will centrally locate the manifold between the two cutting heads, limiting hose length and thus weight. This is different from original thought which put the manifold at the pivot point of the arm.

Originally, the two flow control valves for the rotating cutter were of a different size; however, after reviewing their hydraulic diagrams and manufacturer specifications of their flow rates, it is determined that the same valves could be used from the GC series motors. Mounting them to the plate also kept hose usage to a minimum, protected them and allowed for them to be easily reached for adjustability.

The remaining flow control valve was connected directly to its corresponding output on the manifold. Swivel joints were utilized where needed to prevent crimping of the hoses when they are moved between the horizontal to vertical positions. Flexible hydraulic lines were chosen to be used throughout the cutter mainly because this could be accomplished entirely by what is already available in-house. The only exception to this is the tank (return line) connection between the hedge trimmer motor and rotating motor on the rotating cutting head. Here a hard line is created as the two ports are fixed between each other and the bending radius was too great for any flexible hose on hand. Lastly, a five-wire electrical harness is created for the solenoids by combining their

Copyright 2013, AHMCT Research Center, UC Davis

grounding wires and terminated using a 7-pin AMP Series I connector. All said and done, the Oscillating Cutter weighs 552 N (124 lbf) including the rubber vacuum hose not shown in the figure. The finished Oscillating Cutter can be seen in Figure 5-4.

Next, the Rotary Cutter had to be finished. There are major differences between the Oscillating and Rotary Cutters. First, the two cutters are designed to use the same manifold; however, since AHMCT only had one manifold and the Rotary Cutter only has two hydraulic circuits compared to the Oscillating Cutter's three, it is decided that a different route would be taken on the Rotary Cutter. Instead of using the aluminum block manifold, two individual solenoid activated cartridge valves are to be used and sandwiched together and mounted on one of the hydraulic mounting plates on the cutter. Making the manifold change will allow for a speedier transition when swapping attachments. Note that the other mounting plate is unutilized.

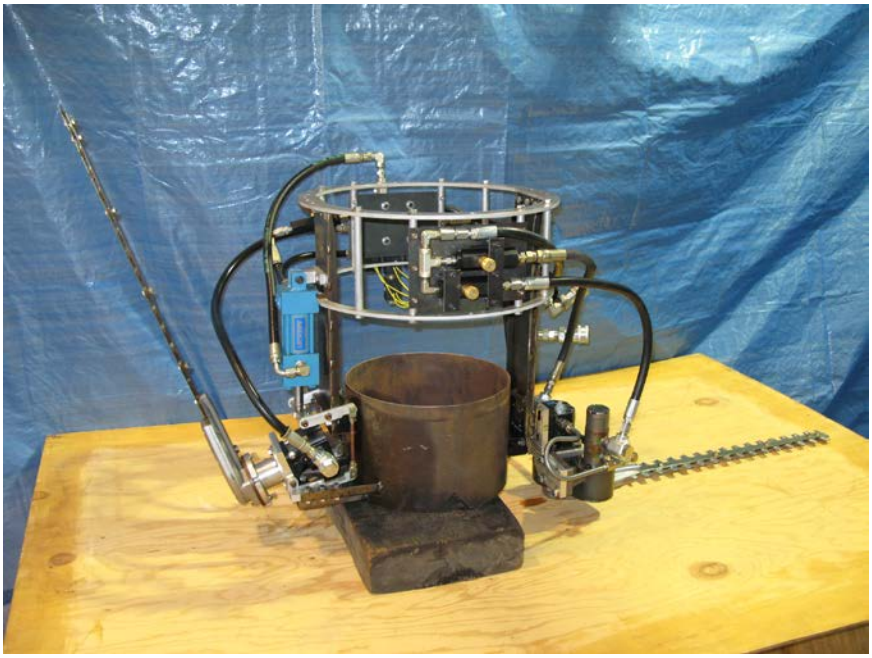

Figure 5-4 Finished Oscillating Cutter

The second major difference between the two Cutters is the use of hydraulic hard-lines instead of the flexible hose. This was done because the three rotary motors run in parallel to each other and it makes sense to only run two lines instead of six and to branch off from the two lines to each motor. Furthermore, it was also done to experiment with the use of hard-lines.

Copyright 2013, AHMCT Research Center, UC Davis

Between the two hard-line circuits and each motor, flexible hoses are used to allow for the flexibility between them. On the two fixed motors, the flow control valves are placed at the input port for easy access. Conversely, on the articulating motor/cutting head, it is placed just above the hydraulic cylinder. This also is the end of the hard-line circuit. As Figure 3.18 shows, the resulting hydraulic circuit is very compact. The final weight of the Rotary Cutter comes out to be 516 N (116 lbf) including the rubber vacuum hose not shown in the figure.

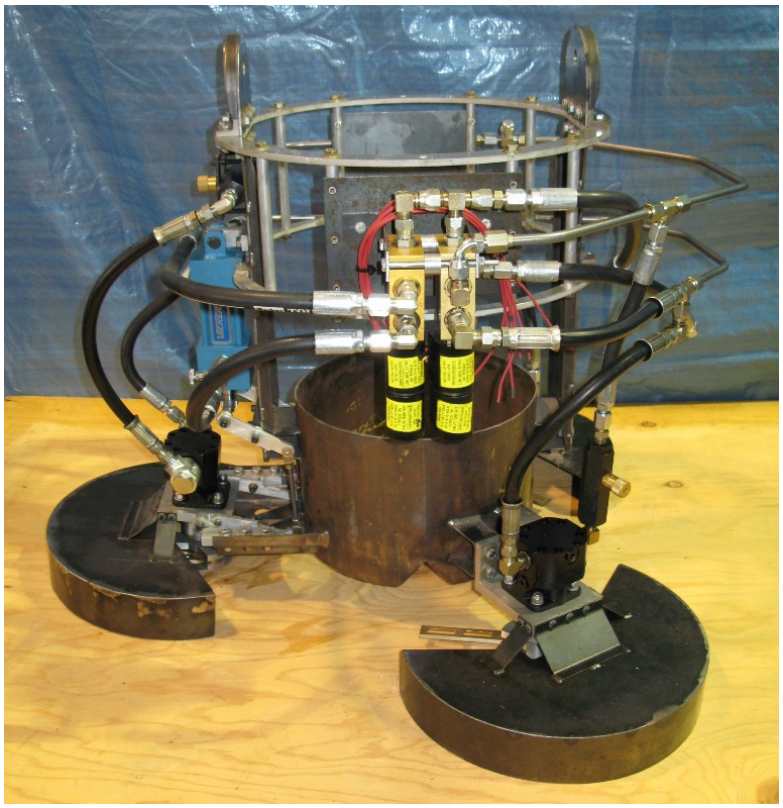

Figure 5-5 Finished Rotary Cutter

In order for each cutter and the ARDVAC to connect electrically and hydraulically with each other without tangling or pinching wires and hoses, a unique connection is needed. A plate is created to be mounted on each cutter on top of the RIC-1000-04 plate on the Rotary Cutter or ARD-950 on the Oscillating Cutter and will be called the Hydraulic-Electric ARDVAC Disconnect (HEAD) Plate. This location places all the connecting hydraulic and electric lines right at the pivot axis of the attachment and directly below the new location of the upper manifold. The HEAD Plate can be seen in Figure 5-6.

Copyright 2013, AHMCT Research Center, UC Davis

To allow for extension of the ARDVAC tube, a pair of J-shaped hard lines and two long coiled flexible hoses extend from the upper manifold to the HEAD. These hoses along with the electrical line allow for tangle free operation throughout all of the ARDVAC's motions.

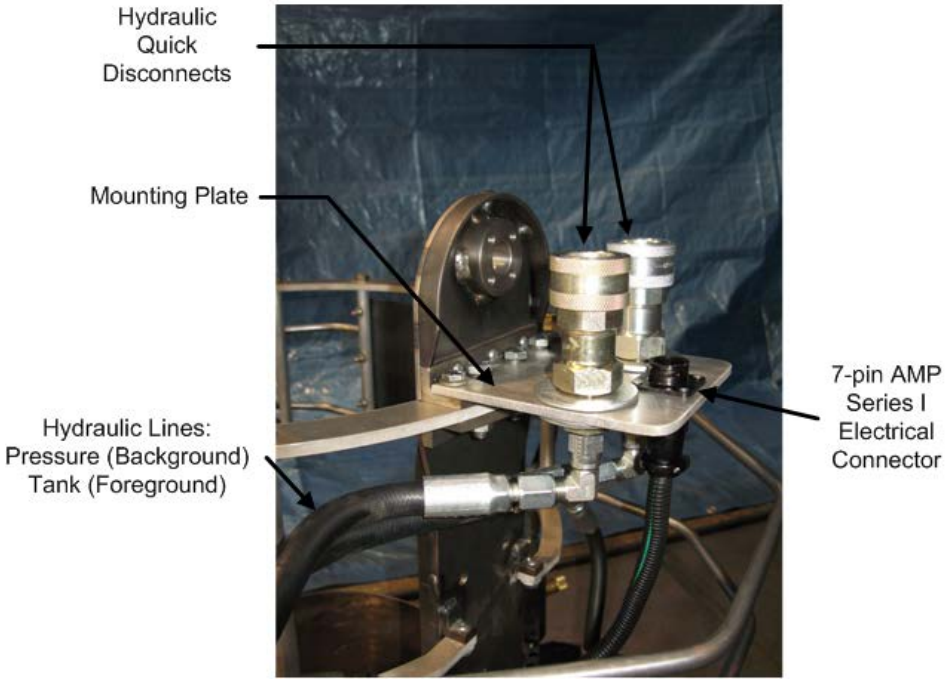

Figure 5-6 HEAD Plate

The HEAD is constructed of 6061 aluminum and is roughly 12.7 cm (5 in) by 12.7 cm (5 in) and 0.476 cm (0.188 in) thick. The design allows for the removal of the pin connecting the attachment to the ARDVAC on that side and removal of the hydraulic and electrical lines from the ARDVAC by incorporating hydraulic quick disconnect couplings and an AMP Series I electrical connector. The end result is the HEAD reduces the time necessary to switch between cutting attachments.

During the assembly of the ARDVAC, it became apparent that the Tumbleweed Shredder had no way of connecting to the ARDVAC. To solve this problem, a 2.54 cm (1 in) wide by 0.476 cm (0.188 in) thick ring of steel is welded to the bottom of the 30.5 cm (12 in) diameter ARD-400-01 main tube. A new part, the ARD-PTH-21, is created and would be added through welding to the Head assembly (ARD-PTH-ASM) of the Tumbleweed Shredder. ARD-PTH-21 has a matching ring as the one on the main tube of the ARDVAC that has been welded on and is connected by four 9.53 mm (0.375 in) bolts

Copyright 2013, AHMCT Research Center, UC Davis

offset by 45º to ease access for assembly. The new completed Head assembly can be seen in Figure 5-7 with part ARDPTH-21 highlighted in red.

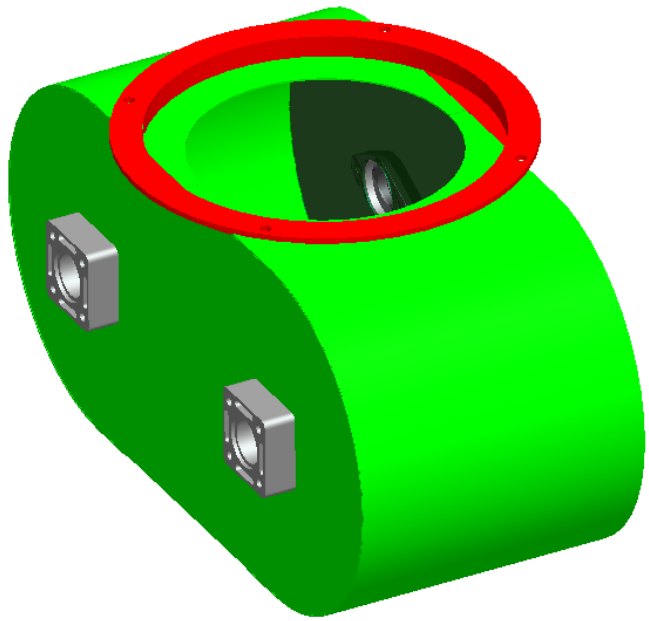

Figure 5-7 New Tumbleweed Head Assembly with Part ARDPTH-21

5.4 Conclusion

This chapter presented the design of the three components to the Test Structure: Support Beam, Wall Bracket, and ARDVAC Connection Bracket. Detailed analyses of the designs were verified by a combination of analytical results and numerical results. The setups of the hydraulic and electrical systems necessary to run the ARDVAC were described. Following this, the steps and assumptions taken to finish the hydraulics and electrical on the Rotary and Oscillating Cutters were described. Furthermore, the design and integration of the HEAD was shown, as was its improvement to the modularity and time needed to switch between cutting attachments. Lastly, the design and analysis of the ARD-PTH-21 was discussed and shown how it will safely attach the Tumbleweed Shredder to the ARDVAC. With everything now in place testing can now begin on the cutting attachments.

Copyright 2013, AHMCT Research Center, UC Davis

CHAPTER 6: TESTING OF VEGETATION CUTTERS

6.1 Chapter Summary

This chapter will document the in-house testing of both the Rotary and Oscillating Cutters for the ARDVAC. The cutting ability of the two cutters will be estimated. The sequence of tests will be described and followed with both pictures and observations of the results. The end of this chapter will identify design and operational issues.

6.2 Introduction

The main goal of these laboratory tests is to validate both of the vegetation attachment designs. This will be accomplished in stages. First, the ARDVAC will be mounted to the test structure. With the electric and hydraulic sub-systems in place and connected, the motions of the ARDVAC will be tested throughout its range to be assured that it is in working order. Next, one of the vegetation attachments will be connected to the ARDVAC and run through its motions and adjusted so that all of the operating speeds for the cutting motors and articulation speeds are correct. Once the attachment can operate correctly, a simulated moving cutting operation using a push cart will be used to test the attachment's cutting ability and robustness. Three types of vegetation, collected from a local roadside, will be used on the cart in this simulation. They are Rye grass, Milk Thistle, and Tree-of Heaven. This process will then be repeated for the other vegetation attachment.

Before testing, the cutting ability of the two vegetation attachments will be estimated comparing their energy to material properties of one of the vegetation types, the Tree-of-Heaven. Afterwards, a more in-depth description of the testing method will be discussed.

6.3 Estimation of Cutting Ability

Estimating the cutting ability of a mechanical device against a biological material is not an exact science and usually relies upon empirical data due to all the specifics with each cutter design. There are many unknowns in the cutting process, for example how much chip formation or splintering occurs, how much the stock of material compresses and then deflects before cutting is completed, and how the density of the wood changes

Copyright 2013, AHMCT Research Center, UC Davis

throughout its diameter. In the specific case of the Rotary and Oscillating Cutter, failure, or cutting, of the material occurs in shear.

The pendulum displacement method is the most popular technique to measure the dynamic cutting energy of biological materials [52]. In this method, energy is measured from a swinging pendulum with a known weight, moment arm distance, and from the difference in the starting and ending angles of the pendulum. This test is reported as the impact toughness or toughness, for short, of the material and as described earlier, measures the fracture energy under a rapid, complete, impact-type loading [53]. This test is described further in ASTM standard D 143 [54].

The United States Forest Products Laboratory (FPL) publishes a pair of documents called the “Wood Handbook” [55] and “Hardwoods of North America” [56] for the United States Department of Agriculture (USDA). These documents, among many other topics, publish material property data on many wood species, including the Tree-of-Heaven being used in testing. Unfortunately, its toughness is not one of the properties published; however, other species similar to the Tree-of-Heaven are. By comparing the Modulus of Elasticity, Modulus of Rupture, Compression Strength parallel and perpendicular to the grain, Shear Strength parallel to grain, and surface Hardness of wood species that also have Toughness values to that of the Tree-of-Heaven, an equally-weighted average difference between the species can be determined. The results of this weighted difference found that the species Sweetgum and Yellow Poplar have properties comparable to the Tree-of-Heaven (+9% and -8%, respectively). This, in turn, provides a range of Toughness values for the Tree-of-Heaven. Using these values and the ideal cross-sectional area of the test specimen in the ASTM Toughness test, results in a range of 61.7 -73.0 KJ/m2 for the Toughness of the Tree-of-Heaven. A table with the properties of the Tree-of-Heaven and a table comparing it to other species can be found in Appendix A.

With the potential to estimate the energy required to cut vegetation of varying diameters, the energy contained within both of the cutters needs to be determined. First the energy within one blade on the Rotary cutter will be calculated by its kinetic energy (KE) through a simple dynamic model. Using this same approach on the Oscillating

Copyright 2013, AHMCT Research Center, UC Davis

cutter is a bit more problematic because the velocity of the blades are always changing, thus so is the KE. Due to this three different approaches will be used to estimate the Oscillating Cutter's ability to cut vegetation. Therefore, in this case the shear force caused by the blades will be used and compared to the Shear Strength property of the Tree-of-Heaven to determine a maximum cuttable diameter.

The KE equation used for the Rotary cutter contains both the linear and rotational components, and is written as

$$T_B = \frac{1}{2} m_B (\vec{V}^{B^*} \circ \vec{V}^{B^*}) + \frac{1}{2} I^{\frac{B}{O}} \vec{\varpi}_B^{\,2} . \tag{6.1}$$

The mass of the blade, m_b and its moment of inertia, $I^{B/O}$, about the center of rotation, O, can be found by using *ProEngineer*'s ability to calculate mass properties and by using the Parallel Axis Theorem to transform the moment of inertia from about the center of gravity of the blade to axis O. The blade's velocity, V^{B*}, and angular velocity, ω_B, are found using Newtonian dynamics, as shown in Figure 6-1. Note the third blade is not shown. The notation employed in Figure 6-1 is summarized in Table 6-1. Derivation of the following equations and copies of the mass properties of the blade can be found in Appendix B. The resulting angular velocity is

$${}^N\vec{\omega}^B = (\dot{q}_1 + \dot{q}_2)\hat{a}_3 . \tag{6.2}$$

The velocity of the blade is written as.

$${}^N\vec{V}^{B*} = l_2 s q_2 (\dot{q}_1 + \dot{q}_2)\hat{a}_1 + (-l_1\dot{q}_1 - l_2 c q_2 (\dot{q}_1 + \dot{q}_2))\hat{a}_2 \ . \tag{6.3}$$

Dotting the velocities results in

$$\begin{aligned} {}^N\vec{V}^{B*} \circ {}^N\vec{V}^{B*} = {} & l_2^2 s^2 q_2 (\dot{q}_1 + \dot{q}_2)^2 + l_1^2 \dot{q}_1^2 + 2 l_1 l_2 \dot{q}_1 (\dot{q}_1 + \dot{q}_2) c q_2{}^2 \\ & + l_2^2 c^2 q_2 (\dot{q}_1 + \dot{q}_2)^2 . \end{aligned} \tag{6.4}$$

Equation 6.4 can be used to calculate the velocity at any combination of angles q_1 and q_2 and their angular velocities; however, before impact with the vegetation, the blade angle and velocity is zero $(q_2, \dot{q}_2 = 0)$. Thus, the total KE of one blade is found to be 35.65 J (315.5 lbf-in).

Copyright 2013, AHMCT Research Center, UC Davis

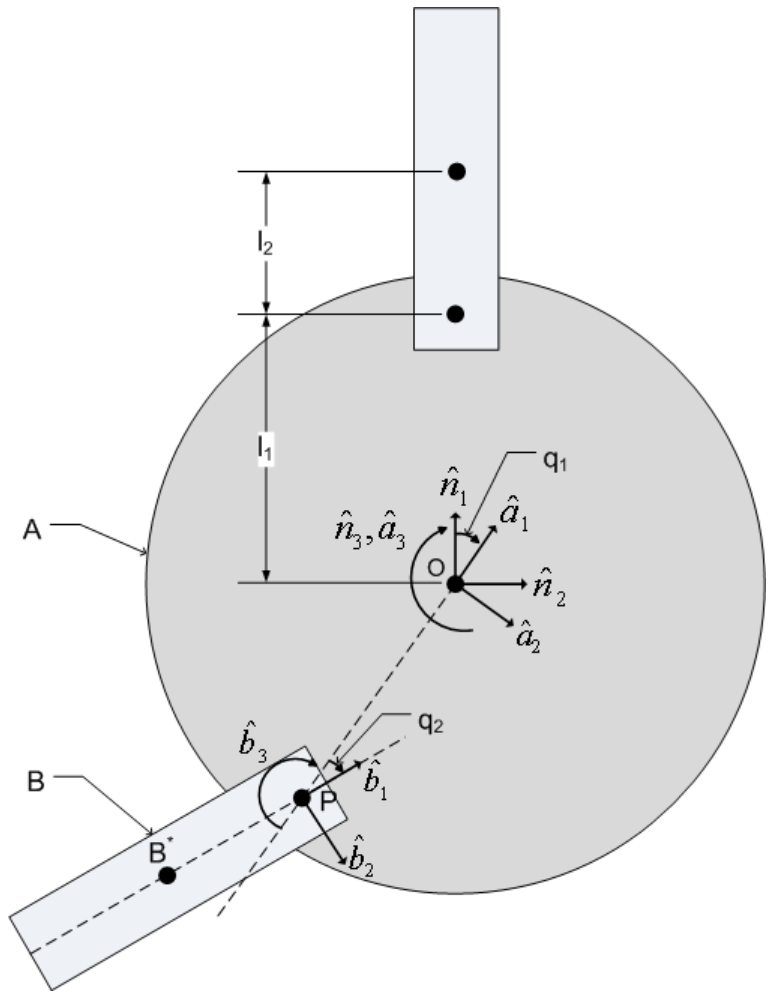

Figure 6-1 Rotary Cutter Dynamic Model

Copyright 2013, AHMCT Research Center, UC Davis

Table 6-1: Dynamic Model Variables

Variables	Description
A	Blade Hub body
B	Blade body
O	Axis of Rotation
P	Blade Rotation Axis (pin)
*B**	Center of Gravity of the Blade
l_1	length from O to P, the center of rotation and blade pin, respectively
l_2	length from P to B*
$\hat{n}_1, \hat{n}_2, \hat{n}_3$	Right-Handed Coordinate system fixed to N, the ground
$\hat{a}_1, \hat{a}_2, \hat{a}_3$	Right-Handed Coordinate system fixed to A
$\hat{b}_1, \hat{b}_2, \hat{b}_3$	Right-Handed Coordinate system fixed to B

Using the range in Toughness per unit area values found earlier for the Tree-of-Heaven, a Toughness range can be specifically determined for any diameter. Furthermore, based on the forward speed of the vehicle and the fixed 3000 RPM of the Rotary cutter, a depth of cut per blade can be determined. Averaging the total Toughness energy needed over the number of blade strikes, allows the energy needed per blade strike to be calculated. These can then be compared to the KE available in a single blade.

The steps taken above are shown in Table 6-2. This calculation includes two assumptions. First, the energy of the blade is regenerated with each revolution. Second, the energy needed per blade strike is averaged over all of the strikes; however, in reality the value is higher when the blade passes through the full diameter of the wood at the center and less when it only passes through far from the center. Nonetheless, Table 6-2 allows for estimating the cutting ability of the Rotary Cutter.

The amount of energy that is transferred in an impact remains to be ascertained. This cannot be determined without understanding the kinematics of this design as it strikes a biological material. Therefore, as a reasonable engineering approximation a value of 50% of the blade's KE will be assumed to be transferred to the wood during an impact; this produces a value of 17.8 J. Comparing this value to Table 6-2 produces maximum cutting diameters of 5.3 cm (2.1 in) for 2 mph and 3.8-4.1 cm (1.5-1.6 in) for 3 mph, which appear to be reasonable results.

Copyright 2013, AHMCT Research Center, UC Davis

Table 6-2: KE per Blade Strike Needed for Failure

Wood Diameter		Wood Area	Toughness Range (J)		# of Blade Strikes per Diameter		Average Energy Needed Per Blade Strike			
							2 mph		3 mph	
in	m	m^2	Lower	Upper	2 mph	3 mph	Lower	Upper	Lower	Upper
0.1	0.0025	5.07E-06	0.3	0.4	0.43	0.28	0.74	0.87	1.10	1.30
0.2	0.0051	2.03E-05	1.3	1.5	0.85	0.57	1.47	1.74	2.20	2.60
0.3	0.0076	4.56E-05	2.8	3.3	1.28	0.85	2.21	2.61	3.30	3.90
0.4	0.0102	8.11E-05	5.0	5.9	1.70	1.14	2.94	3.48	4.40	5.21
0.5	0.0127	1.27E-04	7.8	9.2	2.13	1.42	3.68	4.34	5.51	6.51
0.6	0.0152	1.82E-04	11.3	13.3	2.55	1.70	4.41	5.21	6.61	7.81
0.7	0.0178	2.48E-04	15.3	18.1	2.98	1.99	5.15	6.08	7.71	9.11
0.8	0.0203	3.24E-04	20.0	23.7	3.40	2.27	5.88	6.95	8.81	10.41
0.9	0.0229	4.10E-04	25.3	29.9	3.83	2.56	6.62	7.82	9.91	11.71
1	0.0254	5.07E-04	31.3	37.0	4.26	2.84	7.35	8.69	11.01	13.01
1.1	0.0279	6.13E-04	37.8	44.7	4.68	3.13	8.09	9.56	12.11	14.31
1.2	0.0305	7.30E-04	45.0	53.2	5.11	3.41	8.82	10.43	13.21	15.62
1.3	0.0330	8.56E-04	52.9	62.5	5.53	3.69	9.56	11.29	14.31	16.92
1.4	0.0356	9.93E-04	61.3	72.5	5.96	3.98	10.29	12.16	15.42	18.22
1.5	0.0381	1.14E-03	70.4	83.2	6.38	4.26	11.03	13.03	16.52	19.52
1.6	0.0406	1.30E-03	80.1	94.6	6.81	4.55	11.76	13.90	17.62	20.82
1.7	0.0432	1.46E-03	90.4	106.8	7.23	4.83	12.50	14.77	18.72	22.12
1.8	0.0457	1.64E-03	101.3	119.8	7.66	5.11	13.23	15.64	19.82	23.42
1.9	0.0483	1.83E-03	112.9	133.5	8.09	5.40	13.97	16.51	20.92	24.72
2	0.0508	2.03E-03	125.1	147.9	8.51	5.68	14.70	17.38	22.02	26.03
2.1	0.0533	2.23E-03	137.9	163.0	8.94	5.97	15.44	18.24	23.12	27.33
2.2	0.0559	2.45E-03	151.4	178.9	9.36	6.25	16.17	19.11	24.22	28.63
2.3	0.0584	2.68E-03	165.5	195.6	9.79	6.53	16.91	19.98	25.32	29.93
2.4	0.0610	2.92E-03	180.2	212.9	10.21	6.82	17.64	20.85	26.43	31.23
2.5	0.0635	3.17E-03	195.5	231.1	10.64	7.10	18.38	21.72	27.53	32.53

To try and further understand this transference of energy during an impact, a scenario where the blade from the Rotary Cutter is totally deflected around a circular object is investigated. Specifically, the KE is traced as the velocity, angular velocity, and inertia change as the two angles (q_1 and q_2). Basically, the results show that nearly all of the energy from the blade must be transferred to the undeformable circular object, as would be expected. However, as mentioned earlier, a blade striking a biological object does not fully deflect around an object but also penetrates the object. Knowing how much is difficult to determine and requires empirical data. This is the same position as noted earlier with the use of Table 6-2. Thus, as a best engineering approximate, the impact energy of an individual blade before impact will be used to determine cutting ability.

Estimating the cutting ability of an oscillating or hedge trimmer is difficult due to the fact that the blade velocity profile is sinusoidal with peak blade speeds in the middle

Copyright 2013, AHMCT Research Center, UC Davis

position. This means that as the diameter of the vegetation increases, the velocity of the blade at impact decreases. Three methods will be presented here to estimate the cutting ability of the Oscillating Cutter. The first will look at the average and peak KE of the blade. The second will look at the power output of the motor and convert that into the energy available per cut. Lastly, a comparison in cutting ability of a similar machine will be made.

Unlike the Rotary Cutter, the Oscillating Cutter only has a linear KE component. Thus the only unknowns are the mass of each blade and its velocity. The mass of one of the two blades is again determined using *Pro Engineer* and is found to be 0.352 Kg. Two different velocities will be considered: average and peak. The peak velocity is tabulated in an earlier AHMCT thesis as 3.02 m/s (9.90 ft/s) [47]. The average velocity can be calculated using the known stroke length of the cutter, 3.3 cm (1.3 in), and by assuming 2728 strokes or cuts per minute (twice the Oscillating RPM). This results in an average blade speed of 1.49 m/s (4.90 ft/s). Consequentially, the peak KE is found to be 1.61 J per blade and the average KE is found to be 0.39 J per blade. Double this energy is available per cut because both blades are moving in this design.

Looking back to Table 6-2 and using the peak KE, maximum cutting ability is 1.02 cm (0.40 in) for 2 mph and under 0.76 cm (0.30 in) for 3 mph. The average KE suggests only a cutting ability of 0.3 cm (0.1 in) at 2 mph. Both of these values for cutting diameter are small; however, published literature from handheld hedge trimmer manufactures, such as Black and Decker [57], show that models are designed to cut 0.953-1.91 cm (0.375-0.75 in) material.

Now, the second comparison will be made using the known power of the hydraulic GC series motor [58] at its operating RPM and the cuts per minute value shown earlier. The 970 W (1.3 HP) motor multiplied by the time per cut, in seconds, results in a value of J per cut. The outcome of this calculation finds that each cut has 21.3 J available from the motor. This does not account for frictional losses in the gear train and in the blades. Applying an arbitrary, but possible, friction loss value of 25%, results in 16 J available per cut. Again using Table 6-2, this results in a maximum cutting diameter of about 5.1 cm (2.0 in) and 3.6 cm (1.4 in) for 2 and 3 mph, respectively. These are both above the

Copyright 2013, AHMCT Research Center, UC Davis

maximum blade spacing in the cutter. This seems unlikely to be possible since the cutter should not have enough power to cut even an object at its maximum diameter since its blade speed is zero at its fully open state. Possibly then there are more losses, than the above estimate.

The last method to determine the cutting ability of the Oscillating Cutter will use a comparison from a similar machine, a BCS 722 Harvester, to arrive at a maximum cut diameter. The BCS 722 Harvester [59] has 6 kW (8 HP) and with its sickle bar attachment (another name for oscillating) can cut diameters of wood up to 3.8 cm (1.5 in). Making a comparison using the power divided by the square of the diameter, it can be determined that the Oscillating cutter could have the ability to cut diameters up to 1.5 cm (0.61 in). But, this does not take into account the specific properties of the Tree-of-Heaven or the specific geometry of the Oscillating Cutter. Furthermore, the BCS Harvester is run by a gas motor. Unlike gas motors which have rotational inertia, hydraulic motors driving the Oscillating Cutter only have the small amount of inertia provided to it by the fluid. This may cause variations in their ability to push through a large diameter object.

Only testing will be able to determine the true cutting ability of the two cutters. With that said, if a more in-depth analysis is desired of the cutting process, it is recommended that a high speed video system be used during testing. This will allow the cutting process of both cutters to be better understood. This would result in a refined kinematic model that includes the correct blade deflection/penetration path and friction during the cutting action. This could yield a model that could be applied in the future.

6.4 Testing Method

In order to simulate the forward speed of the ARDVAC similar to actual roadside applications, a push cart is created that will allow the vegetation to be fed into the cutting attachments for testing. The cart is created from a floor creeper and is shown in Figure 6-2. The cart is meant to be pushed by a person at about a walking speed of 3.2-4.8 km/h (2.0-3.0 mph), which is also the normal cutting speed for the Cutters. As a reference during the tests, the correct speed is established using an inexpensive bicycle

Copyright 2013, AHMCT Research Center, UC Davis

speedometer. The cart's speed cannot be controlled during the tests due to space limitations and that it is currently not practical to make a feeder mechanism.

Also, in Figure 6-2, samples of the three types of vegetations can be seen. The Rye grass (*Lolium*) is mounted on the cart and is similar in this dried out state to straw. Milk Thistle (*Silybum Marianum*) is seen in the middle of the three piles on the left of the figure and is a very brittle. The Tree-of-Heaven (*Ailanthus Altissima*) is dispersed in the two remaining groups on the left into smaller and larger diameters. These are actually young trees but will be used to simulate cutting through a woody bush as this plant would not normally be cut down using cutters of this sort.

Figure 6-2 Push Cart

Before the vegetation tests begin, the ARDVAC nozzle itself should be run to verify all of its motions are properly adjusted and that there are no leaks to the hydraulic system or electrical problems. Next, one of the vegetation attachments will be connected and ran through its motions and checked for leaks. At this time it is necessary to adjust the hydraulic flow control valves for the articulation circuits and the individual motors on the cutter so that the correct speed and motor RPM is used in the tests. Setting the RPM is accomplished using a handheld laser tachometer. On the Rotary Cutter, the three motors should be running at 3000 RPM. This means that the tachometer, held over the moving

Copyright 2013, AHMCT Research Center, UC Davis

blades should see a RPM of 9000 due to the fact there are three blades. The Oscillating Cutter can be adjusted in a similar manner. The two Haldex GC motors for the cutting action should be set to 5000 RPM which results in 1364 single blade oscillations per minute. This is easily measured at the end of the oscillating cutter blade. The Lamina A-100-FM rotational motor has a characteristic speed range of 31 – 100 RPM which results in a rotational speed of 15-50 for the cutter; however, higher RPMs will be attainable if the motor is provided more than 11.4 lpm (3.0 gpm). Note that the flow control valves can flow up to 19 lpm (5.0 gpm). To reach the required 240 RPM for an optimum cutting profile another motor needs to be used, which will not be tested here. With safety in mind, this rotation motor should first be operated at a lower RPM before steadily increasing speeds to the recommended speed to determine if the design is sound and there is no hazard in continuing the tests. All of these tests are designed to verify operational capabilities of the Cutters.

The next phase in testing is designed to test the cutting ability of the vegetation attachments and bring to light any weak points in the design. Each of the tests will use some combination of the three vegetation types mentioned earlier. Beginning with the Rye grass and moving onto vegetation that is harder to process. When possible the diameter of the vegetation will be measured, increasing the diameter of the vegetation when possible after each successful cut. Observations will be made about each of the tests, commenting on the results of the cut vegetation, RPM if necessary, and any problems encountered. The sequence and details of all of the tests on the two cutter attachments are recorded in Table 6-3.

Copyright 2013, AHMCT Research Center, UC Davis

Table 6-3: Cutter Testing Events

ARDVAC Vegetation Testing					
Plant Key:		Rye Grass = Rye	Milk Thistle = MT	Tree-of-Heaven = ToH	Tumbleweed = TW
Test #	**Attachment**	**Plant**	**Description**		
1	Rotary	Rye	slow push, avoided skirt, complete cut		
2	Rotary	Rye	much more rye than last test,fast push, through the skrit, not everything cut, some deflected away		
3	Rotary	MT and ToH	slow push, avoided skirt, complete cut, some splintering of vegetation		
4	Rotary	Lots of Rye	pushed through the skirt, cart somewhat deflected away and pushed around cutting area		
5	Rotary	1 ToH and 2 MT	slow, complete cut with some splintering, avoided skirt in order to cut		
6	Rotary	4 MT	slow, avoided skrit, complete cut, one after the other		
7	Rotary	4 ToH	slow, avoided skrit, complete cut, one after the other		
8	Rotary	Rye	SKIRT REMOVED, lots of rye, no problem cutting		
9	Rotary	3 ToH	SKIRT REMOVED, up to 0.72 in diameter, no problem		
10	Rotary	1 ToH	SKIRT REMOVED, no problem, 0.55 in diameter		
11	Rotary	1 MT	SKIRT REMOVED, 0.81 diameter, no problem		
12	Rotary	TW	SKIRT REMOVED, demolished TW, only stems camped to cart left, TW as large as blade area		
13	Rotary	1 ToH	SKIRT REMOVED, 1.23 in diameter, failed to cut, cart nearly deflected away		
14	Osc	Rye	FIXED Cutter, cut like a hot knife through butter		
15	Osc	3 MT	FIXED Cutter, diameter = 0.55 in, not totally clean cut, splintering		
16	Osc	3 ToH	FIXED Cutter, diameter = 0.34-.61 in, complete cut		
17	Osc	3 ToH	FIXED Cutter, all three specimens hit blade at once, all (up to 0.71 in diameter) jammed in blades		
18	Osc	3 MT	FIXED Cutter,all three specimens hit blade at once, some splintered, 0.54 in diameter		
19	Osc	3 ToH	FIXED Cutter, diameter up to 0.69 in, jammed in cutter		
20	Osc	3 Rye	ROTATIONAL Cutter, 80 rpm, cut 2 on first pass, 3rd on second, cut at about 90 degrees, clean		
21	Osc	3 MT	ROTATIONAL Cutter, 80 rpm, 0 deg, some sheared clean, others broke below cut line, 0.59 in dia		
22	Osc	3 ToH	ROTATIONAL Cutter, 80 rpm, 0 degrees, first two cut, jammed on last, diameters 0.39-0.41 in		
23	Osc	3 MT	ROTATIONAL Cutter, 80 rpm, 90 degrees, all cut but splintered, diamters 0.6-0.8 in		
24	Osc	3 ToH	ROTATIONAL Cutter, 80 rpm, 90 degrees, all broke below cut line, not actually cut, dia up to 0.4 in		
25	Osc	3 ToH	ROTATIONAL Cutter, 120 rpm, 0 degrees, massive ARDVAC oscillations, 2 cut, one not (0.55 in)		

* All multiple specimen tests are staggered unless noted otherwise

Copyright 2013, AHMCT Research Center, UC Davis

6.5 Results

Results of the tests will be a mostly pictorial, highlighting what each Cutter did and did not do well. First the Rotary Cutter will be covered followed by the Oscillating Cutter. Pictures are taken before, during, and after each test to better understand the process. Video of the tests will also be taken for promotional purposes.

6.5.1 Rotary Cutter Testing Results

In its current configuration, the Rotary Cutter can only process the Rye Grass from any angle due to the skirts installed to protect against flying debris. It is possible to test both the Milk Thistle and Tree-of-Heaven samples by avoiding the skirt by going behind the center of each cutter assembly. Tests of this type are encouraging with the Cutter having no problem processing either of those two vegetation types. Tests with the Rye Grass passing under the skirt are not encouraging because the taller grass used during the tests to simulate an overgrown roadside, gets pushed over as it passes under the skirt but is unable to stand back up within the confines of the skirt. This can be seen in the before and after cut shots in Figure 6-3 and Figure 6-4.

Due to this unforeseen limitation, the skirt on one of the fixed rotary cutters is removed to allow unprotected access and allow continued testing. The results from one of the successful tests in which a combination of Milk Thistle and Tree-of-Heaven are used can be seen in Figure 6-5. Note the splintering of the Milk Thistle and jagged cut on the Tree-of-Heaven. In another shot, Figure 6-6, showing the testing of three roughly 1.3 cm (0.50 in) Tree-of-Heaven specimens during another testing session, the specimens appear to be broken in half below the cutting plane.

Copyright 2013, AHMCT Research Center, UC Davis

Figure 6-3 Rye Grass Before with Skirt

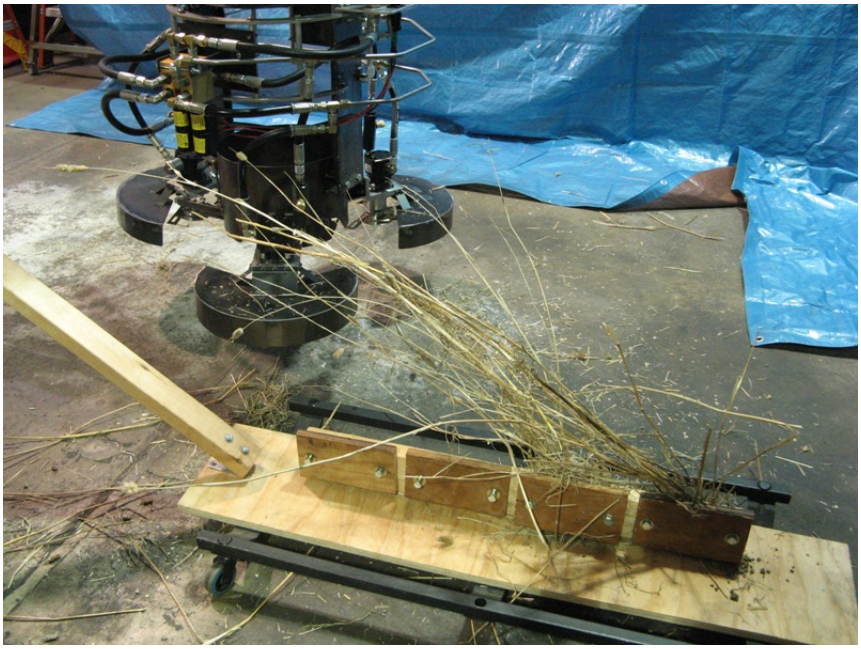

Figure 6-4 Rye Grass After with Skirt

Copyright 2013, AHMCT Research Center, UC Davis

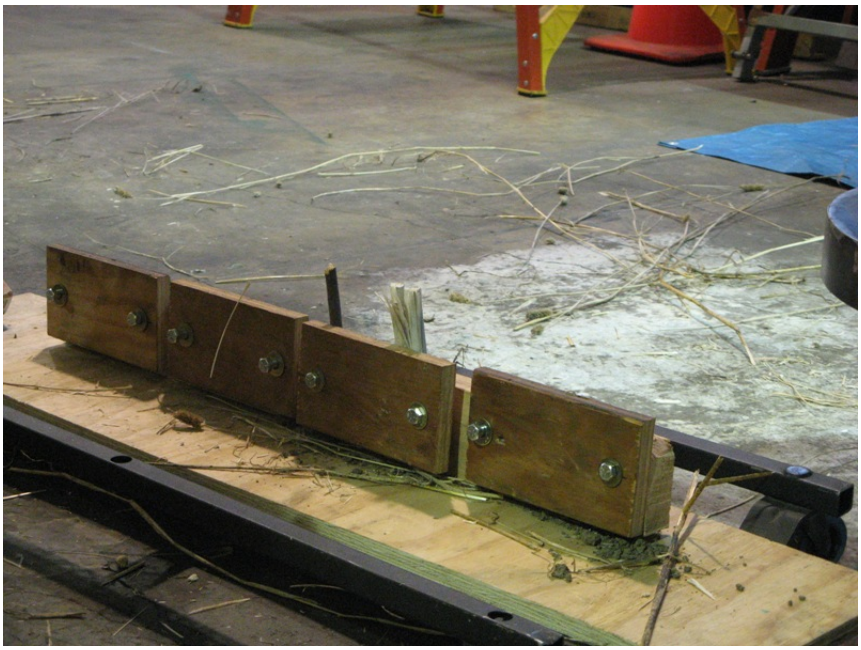

Figure 6-5 After-shot of cut Milk Thistle and Tree-of-Heaven

Figure 6-6 Tree-of-Heaven Test

This breakage due to bending instead of cutting is most likely caused by both the overly stiff clamps on the cart, higher than normal feed rate, and cut height above the cart. In another test, a Tumbleweed plant was brought in to simulate a dense bush. Figure 6-7 and Figure 6-8 clearly show that the Rotary Cutter is effective against densely-packed small diameter bushes.

Copyright 2013, AHMCT Research Center, UC Davis

Figure 6-7 Tumbleweed Before

Figure 6-8 Tumbleweed After

The last few tests performed on the Rotary Cutter is designed to see how big of a Tree-of-Heaven specimen could process. This could then be compared to the earlier estimates. After cutting a 2.5 cm (1.0 in) specimen, the next size available for testing is a 3.1 cm (1.2 in) specimen. The Rotary Cutter failed to cut this specimen, as seen in Figure 6-9, but did cut a little over halfway through before stopping.

Copyright 2013, AHMCT Research Center, UC Davis

Figure 6-9 Failed Large Diameter Cut

Comparing this diameter to the ones predicted earlier show that our predictions were high, but close. Specifically the predicted 3 mph diameter of 3.8 cm (1.5 in) is close. Moreover, as seen with energy estimates used in Table 6-2 speed plays a big factor in determining the cutting ability of the system. Moreover, those energy values are averages and most likely underestimate the energy required of each blade strike as the blade passes through the thicker center portion of the wood.

6.5.2 Oscillating Cutter Test Results

Testing with the Oscillating Cutter first begins on the fixed blades and then moves onto the rotational blades. The fixed blades had no problem cutting Rye Grass, Milk Thistle up to 1.40 cm (0.55 in), and Tree-of-Heaven specimens up to 1.55 (0.61 in) when they are pushed through perpendicular, meaning one at a time, into the blade. The results from each of these tests can be seen in Figure 6-10, Figure 6-11 and Figure 6-12. One observation taken from the last two figures is that larger diameters (both the Milk Thistle (center) and Tree-of-Heaven (right)) are not cut as cleanly as the others. They show signs of splintering and breakage, which suggests the blade more or less forced its way through the edges of the specimens instead of cutting.

Copyright 2013, AHMCT Research Center, UC Davis

Figure 6-10 Fixed Osc. Cutter, Rye Grass

Figure 6-11 Fixed Osc. Cutter, Milk Thistle

Copyright 2013, AHMCT Research Center, UC Davis

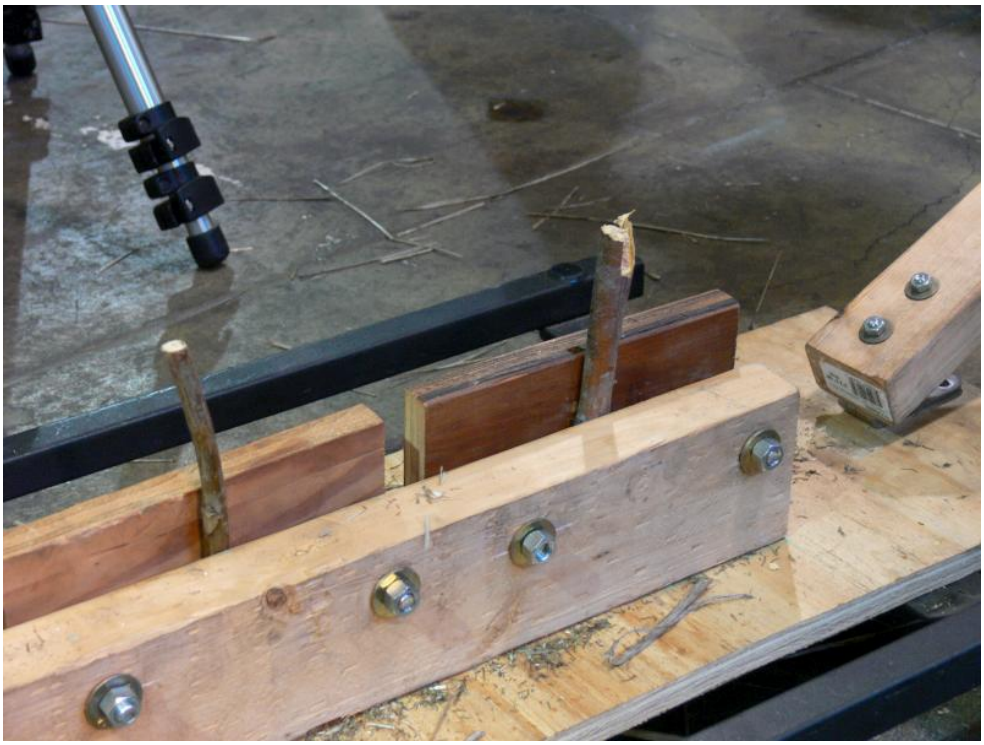

Figure 6-12 Fixed Osc. Cutter, Tree-of-Heaven

Next, the fixed cutter is tested against multiple simultaneous impacts using both Milk Thistle and the Tree-of-Heaven. In both cases, three specimens will be used. In the case of the Tree-of-Heaven, shown in Figure 6-13, all three specimens are uncut and actually forced the cutting blades to jam. The same figure also shows that the front specimen is almost cut all the way through and could be pushed by a finger. The largest diameter in this test is 1.80 cm (0.71 in). Conversely, testing the Milk Thistle in a similar fashion resulted in all of the 1.3 cm (0.54 in) specimens successfully being cut as shown in Figure 6-14. After the jamming in the simultaneous Tree-of-Heaven test, another test using similar sized specimens is conducted; however, instead of a simultaneous impact, the original perpendicular or staggered impact is used. This test also jammed the motor with a specimen size of 1.75 cm (0.69 in). This result compares favorably with the estimate from the BCS Harvester, 1.55 cm, and is also underestimated by the KE based value of 1.0 cm.

Copyright 2013, AHMCT Research Center, UC Davis

Figure 6-13 Fixed Osc. Cutter, Tree-of-Heaven, Simultaneous Impact

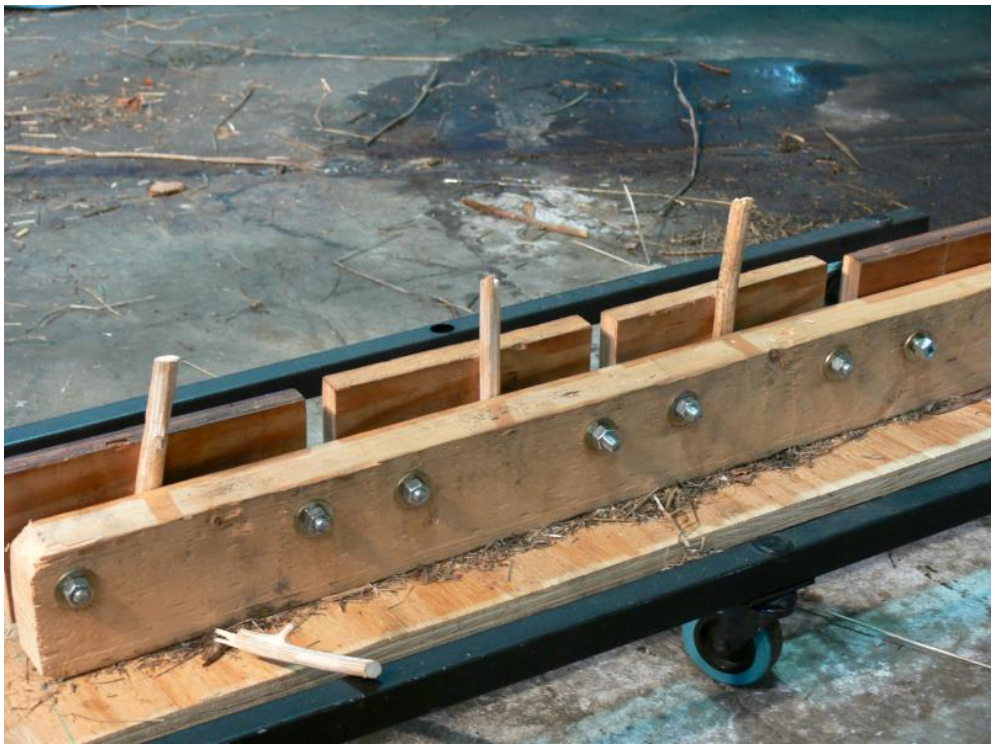

Figure 6-14 Fixed Osc. Cutter, Milk Thistle, Simultaneous Impact

The rotational cutter, like the fixed cutter, also has no problem cutting Rye Grass in large concentrations, as seen in Figure 6-15. These tests are run at 80 RPM. In general, the rotational blade did not cut Milk Thistle or Tree-of-Heaven as well as the fixed blade.

Copyright 2013, AHMCT Research Center, UC Davis

In the first two tests with these specimens, the cart is pushed through so that the specimens pass through the blade path in a more or less perpendicular direction. This will be called the zero degree direction. All three of the Milk Thistle specimens, shown in Figure 6-16, are cut but some are broken off by the impact of the blade and not the cutting action. In the case of the Tree-of-Heaven test at zero degrees, Figure 6-17 shows that all the specimens are cut, but the clamp on the cart is not able to keep the specimens vertical during the impact, i.e. the blade effectively knocks them over before cutting them at off angles.

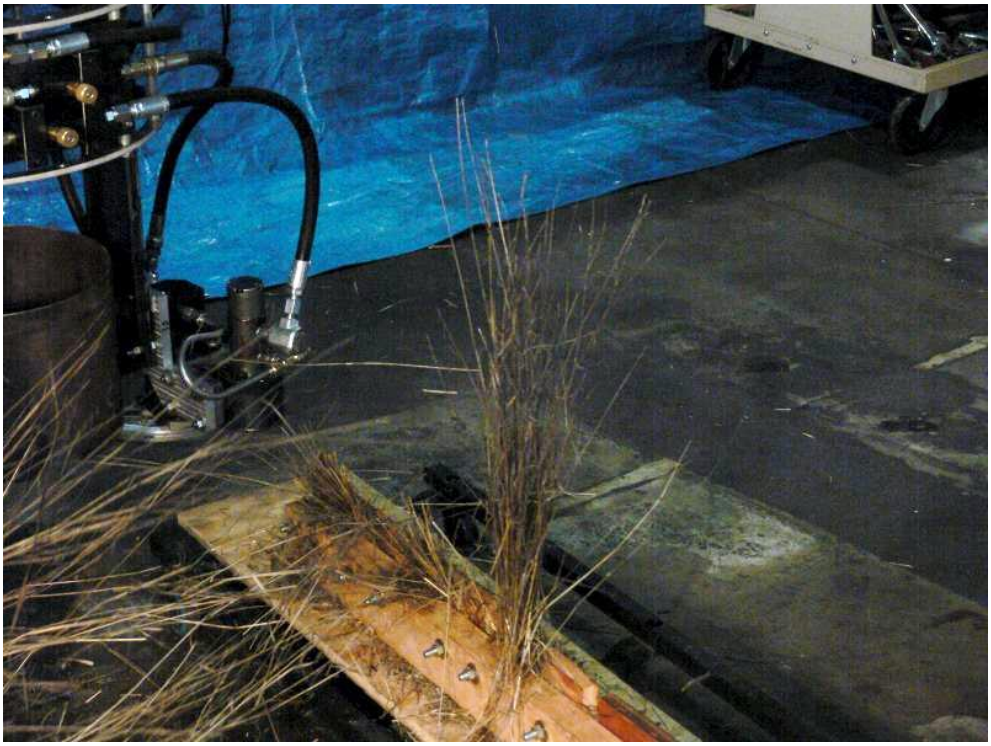

Figure 6-15 Rotational Osc. Cutter, Rye Grass

Copyright 2013, AHMCT Research Center, UC Davis

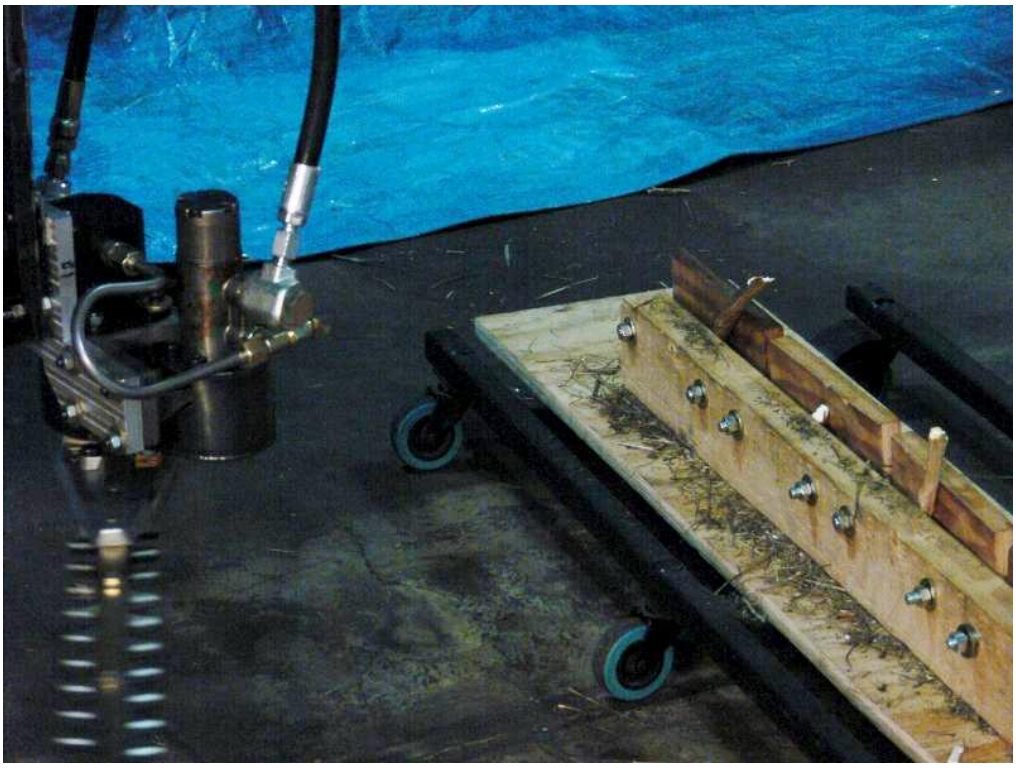

Figure 6-16 Rotational Osc. Cutter, 0 deg., Milk Thistle

Figure 6-17 Rotational Osc. Cutter, 0 deg., Tree-of-Heaven

Copyright 2013, AHMCT Research Center, UC Davis

The rotational blade is then tested so that the specimens all strike at once or parallel to the blade. This will be called a 90 degree test. These results are worse than all previous. In both tests of Milk Thistle and Tree-of-Heaven, the blade did not cut any of the specimens but instead broke or bent them in half where they are clamped in the cart. Figure 6-18 and Figure 6-19 show post testing pictures. It seems without any fingers to guide the specimens into the cutting action, the blades just knock over whatever is in their way.

Figure 6-18 Rotational Osc. Cutter, 90 deg., Milk Thistle

Copyright 2013, AHMCT Research Center, UC Davis

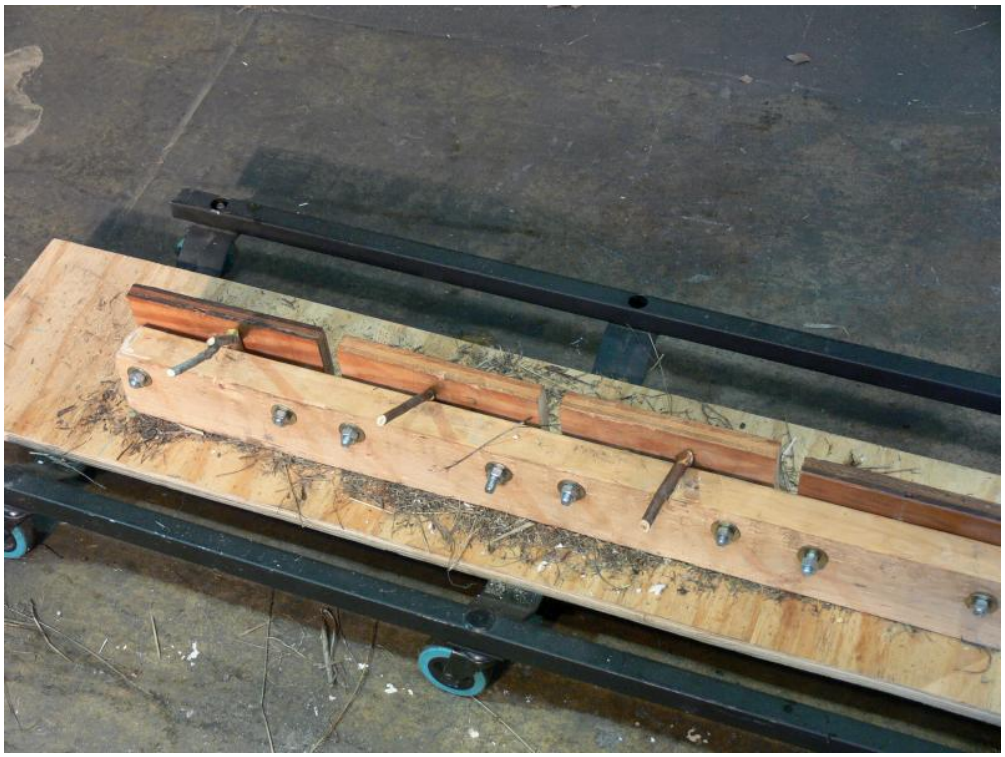

Figure 6-19 Rotational Osc. Cutter, 90 deg., Tree-of-Heaven

One last test is performed on the Oscillating Cutter's rotational blade. The RPM of the blade is cranked up to 120, which is nearly fully open on its flow control valve. This caused fairly large movements in the ARDVAC itself. Displacement of the ARDVAC at the bottom is found to be close to 0.3 m (1 ft). Testing is halted at this point and it is not recommended that the Oscillating Cutter be run at more than 80 RPM in the rotational motor so that these large oscillations in the ARDVAC can be avoided.

After these rounds of tests were complete, AHMCT was able to acquire a high-speed video system. Using the Rotary Cutter, video was taken of the blade cutting both smaller diameters, in which it had good results before, and a large diameter wood similar to the one in which it failed to cut. Results show that the actual feed speeds used might have been slower than desired because video clearly shows more blade strikes on a given diameter than what is predicted in Table 6-2. Tests with the large diameter wood show that the blade strikes first cut the material. But, eventually cannot regain their KE before striking the wood on the next pass and pile up upon each other on the surface of the wood

Copyright 2013, AHMCT Research Center, UC Davis

specimen. Ultimately, nearly stalling the blades and pushing the specimen out of the cutting area.

Currently, video tests with the Oscillating cutter have not been performed. Should video be taken in the future, it would be interesting to see why the material is knocked over by the rotational blade and attempt to determine if it is insufficient rpm, power, lack of guides for the blades, or some other cause.

6.6 Rotary Cutter Shielding Considerations

A problem discovered during testing concerns the protective skirt around each one of the cutting assemblies. The purpose of the skirt is to both prevent high speed debris from flying out and injuring someone and to prevent the cutting blades from colliding into solid objects that could cause damage. During testing, the skirt had to be removed so that the cutter could process all the types of vegetation. This raises two questions: what are we trying to protect and what types of vegetation is the Rotary Cutter expected to encounter?

The first question only raises more questions. For example, will people be operating in close proximity to the cutting attachment or is there only concern for protecting the machine and preventing debris from ending up in an active lane? This question is also tied to the vacuuming ability of the cut debris by each of the cutting attachments, but at this point is untested and will be excluded. If people are to be near the machine either a safe distance must be established or the skirt should be designed to prevent debris from flying out. If the only concern is protecting the cutter from striking a post or a large rock, a skirt is not the best choice. In this case an open perimeter guard placed higher than the cutting plane is a good choice. If debris needs to be stopped from making its way to the roadway, then a skirt could be positioned on the side of the vehicle or spaced off to the side from the cutting attachment.

In response to the second question, if grass is the only type of vegetation to be processed, then the height of the skirt could be raised to allow more room for the grass to stand up inside. This should allow for a better processing of grass. If bushes and other woody type material is to be processed, then a different approach should be taken. Of course no guard could be used, or if a guard is needed for previously stated reasons the

Copyright 2013, AHMCT Research Center, UC Davis

main factor determining the height of woody vegetation to be processed is the distance between the cutting plane and the lowest fixed part of the skirt/guard. This might turn into a trial and error problem.

One point to make is that string trimmers only have guards to protect the user, not anyone standing nearby. Possibly a study should be done that takes the energy contained within the blades and compare this to various sized pebbles, rocks, wood, and other debris to determine how far and fast the debris is exiting the cutting area. From this, a safe distance could be calculated. Taking all of these scenarios into consideration, two solutions come to mind. First, a flexible vertical guard mounted to a perimeter frame above the cutting plane could be used. This could be made of either metal chain or strips of rubber suspended from the perimeter of the frame. This is similar in idea to a mud flap. This design would succeed in protecting both workers and the cutter, but limits the sizes of vegetation that can be processed. Also, room would have to be left to allow the guards to swing freely without striking the cutting blades. This could cause the guard to be much larger than the cutting area depending on its height above the cutting plane.

Another idea could use fixed guides like those found on an electric hair clipper. These could be positioned either radially or parallel to each other. The later would require the cutting attachment to only process vegetation in one direction. These would extend slightly below the cutting plane and slightly past the diameter of the cutting plane. Both of these would have no obstruction above the cutting plane allowing for tall vegetation to be processed. The radially mounted one would do a good job of deflecting debris but may have problem processing some types of vegetation, especially large diameter woody ones. The parallel one would have the opposite ability, potentially not protecting in all directions but retaining the ability to process large vegetation.

6.7 Conclusion

Integration of the cutting attachments with the ARDVAC is proven to be possible; however, the weight of the attachment is still a big concern for the integrity of the rest of the system. Back-of-the-envelope estimation of cutting ability proved to be difficult, although using the Toughness energy shows promise if the cutting path is known. The

Copyright 2013, AHMCT Research Center, UC Davis

design of the vegetation clamp on the cart may have also influenced how some of the attachments performed.

The Rotary Cutter performed better than the Oscillating Cutter. It is able to process the largest diameter of vegetation. If issues with the skirt design are worked out, the Rotary Cutter could prove to be a viable tool for the roadside. The Oscillating Cutter on the other hand, had a more difficult time processing the woodier vegetation. The rotation of the oscillating blade might decrease its cutting ability. First, the blade is rotating so fast that the vegetation does not have time to move into the cutting area and is instead knocked over. This could be fixed if finger guides are included on the blade. Second, the rotational speed and oscillating speed are highly interdependent. This design did work very well cutting grassy vegetation and can cover a very large area with each pass.

In general, both of the cutting attachments need to be further industrialized to survive and perform through the abuses of actual roadside use. Furthermore, more power is needed in both in order to process more vegetation at once, as both of the attachments were found to not cut or jam when only one object was moved into their cutting planes. At this point, either the current designs can be continued or a new design can be started based on the lessons learned. Any future road testing should focus on better quantifying the cutting attachment's coverage, further optimizing the speed at which they operate (vehicle speed and operational speed), verifying the vacuum ability of the cut vegetation, and testing their specific design purposes. The Rotary Cutter, needs to be tested edging Ivy, and the Oscillating Cutter needs to be tested at vertical trimming.

On just the Oscillating Cutter, a few more ideas are offered. First, the rotary oscillating blade needs a counter balance if it is to be used further and to reach the necessary speed to completely cut a section while moving forward. It also might be beneficial to separate the rotary oscillating cutters two motions. This would provide more situations where the Oscillating Cutter could be utilized. Furthermore, since an optimum cutting profile depends largely on the vehicle's forward speed, possibly a controller could be utilized to relate vehicle forward speed to the rotational speed of the blade to ensure the optimum cutting profile is achieved. Lastly, if two rotary oscillating blades were used instead of

Copyright 2013, AHMCT Research Center, UC Davis

one, the blades could be synced together either mechanically or electrically. This might allow for a faster vehicle forward speed.

Copyright 2013, AHMCT Research Center, UC Davis

(BLANK PAGE)

Copyright 2013, AHMCT Research Center, UC Davis

CHAPTER 7: ARDVAC TUMBLEWEED PROCESSOR

7.1 Chapter Summary

In this chapter the ARDVAC tumbleweed processor attachment is introduced and various components are optimized. The optimizations done are to improve build ability, increase strength, make maintenance easier, and decrease fabrication cost. These optimizations will allow the system to be built, and also ensure that the system can be operated efficiently and reliably in the real world. After the optimizations are done a new high performance cutting head system will be developed. The high performance cutting head will reduce the part count, increases strength, and lower the overall cost of the Tumbleweed Processor. This new design is the one that will be used in the final system.

7.2 Introduction

The ARDVAC is a tool developed by AHMCT, and is now available through normal commercial channels. Two of these units are operated by Caltrans as part of their fleet of equipment. The ARDVAC is a robotic arm that is attached to a commercial vacuum truck. Combining the vacuum trucks telescoping boom with the ARDVAC nozzle itself, the system has seven degrees of freedom. The ARDVAC is currently used to sweep difficult to reach areas thus keeping them clean of debris. To extend the capabilities of the ARDVAC various attachments are being developed. These attachments are intended to evolve the ARDVAC into a machine that can cut light vegetation while vacuuming up the clippings produced. With the right attachment, the ARDVAC could be used to collect tumbleweeds. The telescoping boom and robotic nozzle make a prime candidate for removing tumbleweeds that pile up along the back side of fences.

Copyright 2013, AHMCT Research Center, UC Davis

Figure 7-1 ARDVAC SYSTEM [6]

Various vegetation processing attachments have been conceptually developed for the ARDVAC [33]. In the previous conceptual work, two key parameters were identified, cost and weight. It was decided that the attachment cost should not exceed 20% of the cost of the ARDVAC nozzle itself. The ARDVAC nozzle cost is around $25,000 so any attachments should not cost more than $5,000 [33]. The attachments low cost and low weight limits them to specialized tasks. Appropriate tasks are things like cutting weeds in areas otherwise impossible to reach by other types of machines, and not tasks such as mowing large fields or rugged terrain. This point must be kept in mind during any kind of comparison of tools; none of the ARDVAC attachments should be compared to things like heavy tractor lawn mower systems.

The initial concept of the Tumbleweed Processor was developed in 2004 [34] and later modified in 2005 [35]. It was partially constructed from the plans developed in 2005 but never completed due to some manufacturing and design issues. Working within the constraints of the parts already built, the Tumbleweed Processor will be redesigned to improve its manufacturability and make maintenance easier. A new high performance cutting head system will be developed, and analysis will be completed to ensure safe operation.

7.3 Introduction to the Tumbleweed Processor

The Tumbleweed Processor attachment for the ARDVAC shown in Figure 7-2 is, as the name implies, intended to collect and process (shred) tumbleweeds. The shredded

Copyright 2013, AHMCT Research Center, UC Davis

parts of the tumbleweed will be contained in the vacuum of the ARDVAC. This is the only known tool which has the ability to reach over fences and obstacles to collect tumbleweeds under vacuum thus keeping their seeds from spreading

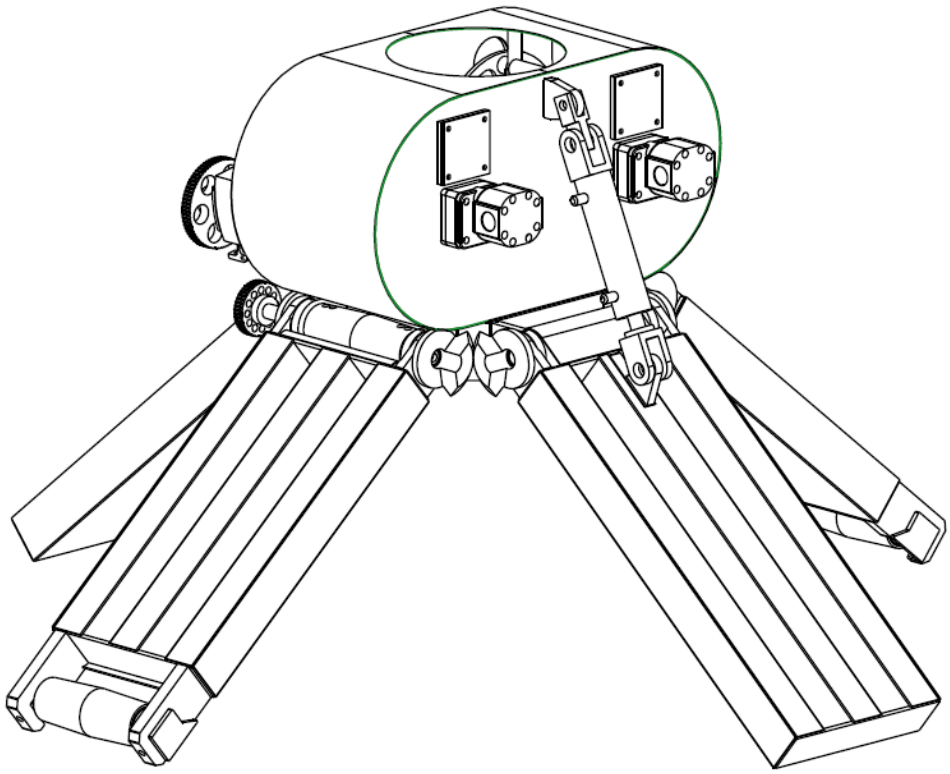

Figure 7-2 Tumbleweed Processor

The egg shaped head unit section seen in Figure 7-2 contains two flail blade cutting heads. The two cutting heads are counter rotating so that they will encourage the tumbleweed parts to be pulled up between them. Once the tumbleweed is sufficiently cut, the parts will be drawn into the ARDVAC vacuum system and thus not allowed to spread seeds.

The four arms open and close in a claw like manner. One arm is powered by a single hydraulic cylinder with a 10 cm (4 inch) stroke. The remaining three arms are connected to this arm through a series of modified bevel gears. This ensures that all of the arms move in sync and act as one to apply a uniform pressure on the tumbleweed as it is grasped. The two arms to the left and right of the hydraulic cylinder have conveyor belts on them designed to snare the tumbleweed and pull it up toward the cutting head. These conveyor belts are powered by the main cutter head shaft which spins at 3000RPM. As

Copyright 2013, AHMCT Research Center, UC Davis

seen in Figure 7-3, a double reduction belt drive with a ratio of 0.038 [35] is used to lower the driveshaft's 3000 RPM to a reasonable speed for the conveyor belts.

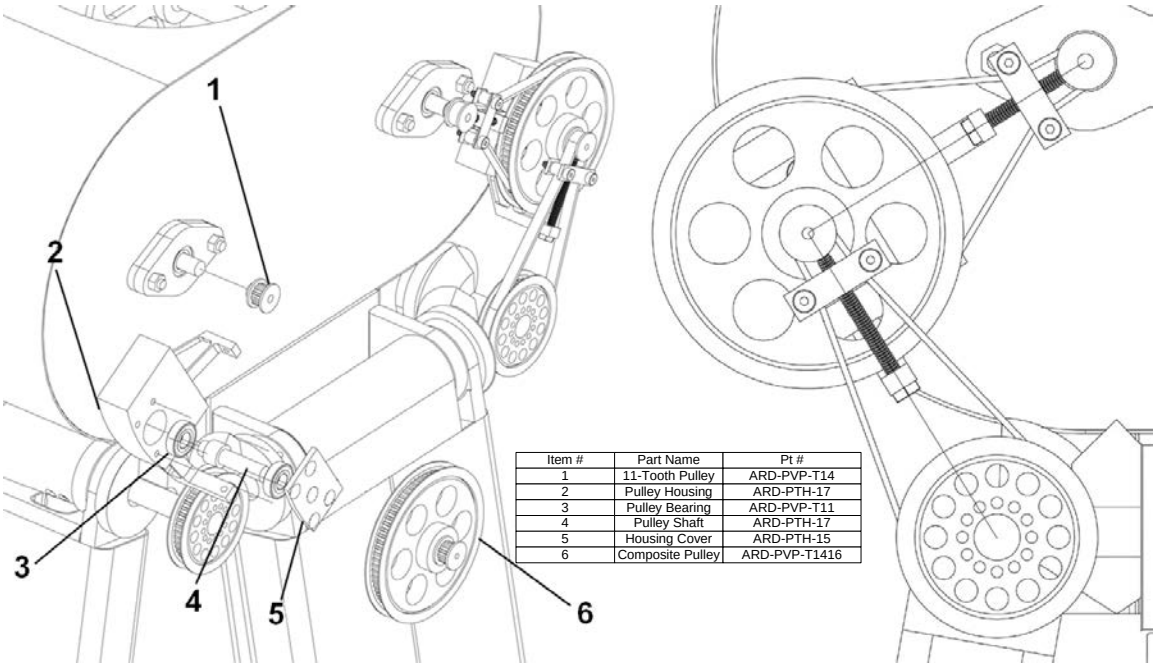

Item #	Part Name	Pt #
1	11-Tooth Pulley	ARD-PVP-T14
2	Pulley Housing	ARD-PTH-17
3	Pulley Bearing	ARD-PVP-T11
4	Pulley Shaft	ARD-PTH-17
5	Housing Cover	ARD-PTH-15
6	Composite Pulley	ARD-PVP-T1416

Figure 7-3 Reduction Pulley Assembly [35].

7.4 Part Optimization

The first step toward moving the Tumbleweed Processor from concept to prototype is to survey what already exists and check for potential problem areas. Potential problem areas that will affect manufacturing, cost, and maintenance were identified. These include:

- The left and right cutting head flywheels were different resulting in extra machining time
- The cutter and belt drive system was made from many small pieces bolted together increasing possible failure points
- The cutting blades were not replaceable without major disassembly
- The plastic blade spacers were not replaceable without major disassembly
- Various parts were overly complicated.
- The arms and their associated conveyor belt systems cannot be tested without the cutting heads installed and operating at full speed.

Copyright 2013, AHMCT Research Center, UC Davis

The two cutter flywheels and the cutter drive line are the first area of refinement. In the original design, the two flywheels, as shown in Figure 7-4, were similar in design, but required unique parts. The flywheel on the left side of Figure 7-4 attaches to the drive motor with a coupling. The flywheel on the right side of Figure 7-4 attaches to the belt coupling that transfers power for the belt reduction system. The only difference between the two flywheels can be seen in the hub section.

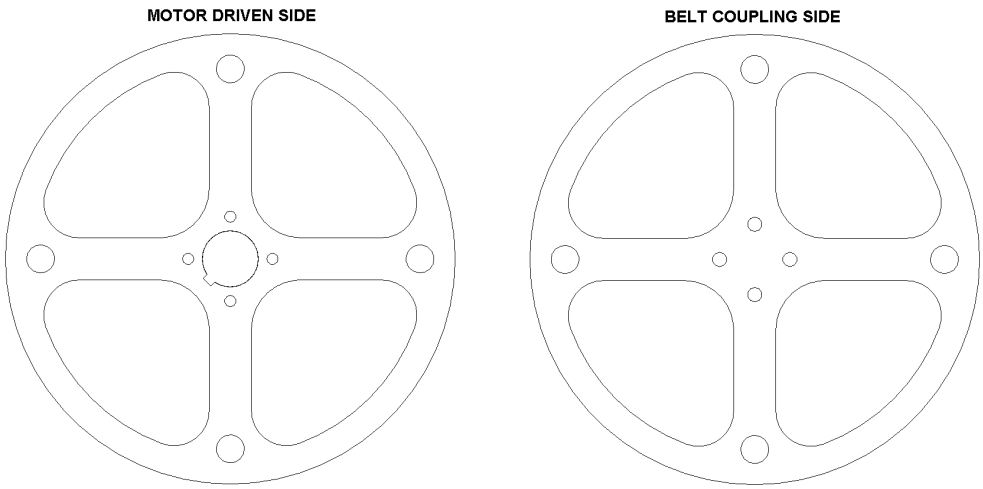

Figure 7-4 Original Flywheels

Figure 7-5 shows an exploded view of the motor, coupling, and flywheel. The coupling slides into the center of the flywheel and then bolts to the 4 holes threaded into the flywheel. The back side of the flywheel is welded to the flange on the main cutter axle (seen behind the blue flywheel). The cutter shafts are welded to the cutter flywheel.

Copyright 2013, AHMCT Research Center, UC Davis

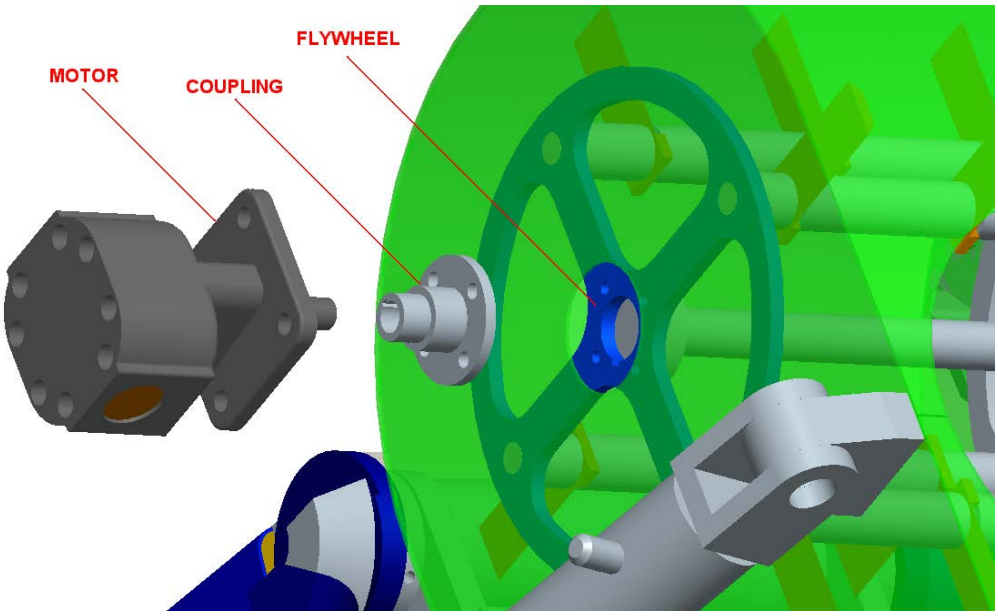

Figure 7-5 Motor Flywheel Assembly Explode

The belt coupling flywheel seen in Figure 7-6 has a solid hub with 4 unthreaded bolts at the base of the spokes (on a smaller diameter bolt circle than the motor driven side). The bolt holes line up with the flange on the main cutter drive axle. The belt coupling sits flat against the flywheel held in place with long machine screws anchoring it to the main cutter axle behind the flywheel. This serves to hold both the belt coupling and the flywheel to the central axle.

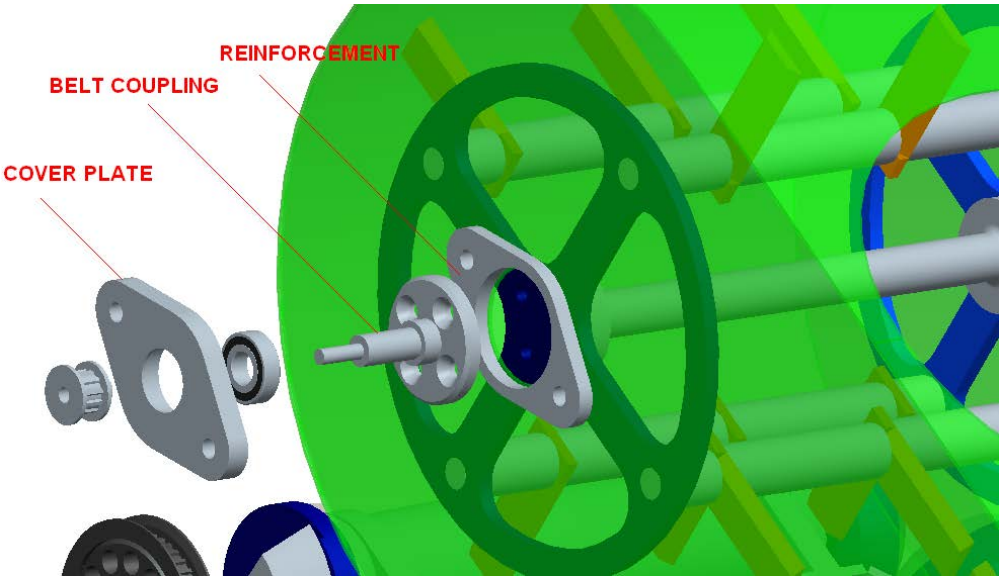

Figure 7-6 Belt Coupling Assembly Explode

To simplify the overall design and streamline the manufacturing process the flywheels were modified to make them identical. On the motor driven side the only change

Copyright 2013, AHMCT Research Center, UC Davis

required is to leave the mounting holes unthreaded. The pulley side flywheel was completely replaced with a flywheel identical to the new motor driven side. Since all 4 flywheels (2 flywheels per cutter times 2 cutters) are identical, they can be made using a dual head water jet process much quicker and cheaper than the earlier design.

The modified motor driven side flywheel is bolted directly onto the main cutter shaft. Some additional parts had to be redesigned to accommodate this modification. The only constraint for the redesign is to ensure the new parts are compatible with the main cutter head shell that was previously made.

The first part modified is the main cutter drive axle (part number ARD-PTC-03A). The flanges on the main cutter drive axle were enlarged and strengthened to accommodate bolting the flywheel to it. The flywheel to belt drive coupling (part number ARD-PTC-08A) which bolts to the main cutter axle and transfers power to the belt drive system was modified by increasing the diameter of the bolt pattern to match the new flywheel and axle design. The overall diameter of the coupling had to be kept small enough to fit the head unit of the Tumbleweed Processor.

Assembly of the modified parts is different than in the original design. With the modified parts nothing is welded together. The coupling pieces are fastened into place with mounting bolts that pass through them and the flywheel bolting directly onto the flange of the main drive axle. This modular concept allows parts to be changed independently when worn.

The above modifications fixed some issues but the cutting head still requires many individual parts (not including the blades and spacers). Some of the parts are simple to make, but some of them are relatively complicated to machine. The couplings (part numbers ARD-PTC-09A, ARD-PTC-08A) and the flanged main axle (part number ARD-PTC-03A), are some of the more difficult parts to manufacture in the cutting head assembly. These parts alone were going to cost about $2100 to have custom made. This high price, along with some other unsolved issues in the system prompted development of the High Performance Cutter Head discussed in a subsequent section of this chapter.

After the cutting head redesign was complete several of the supporting systems were considered and modified as necessary to improve reliability, and lower the cost of

Copyright 2013, AHMCT Research Center, UC Davis

manufacturing. These parts include the composite pulley housing (part # ARD-PTH-14), the belt tension brackets (part # ARD-PTH-16), the custom arm pillow block bearings (part # ARD-ARM-17), and the drive gears (part # ARD-PTH-14).

The composite pulley housing (ARD-PTH-14A) is the part that is attached to the side of the head and supports the bearings and shaft of the belt reduction drive. It is made from mild steel so that it can be easily welded to the side of the head unit. The center of the part is machined out to reduce weight of the part and does not serve any mechanical purpose. In the original design the weight reduction was done with sharp corners and small features. These small features significantly increase machine time and cost to make the part.

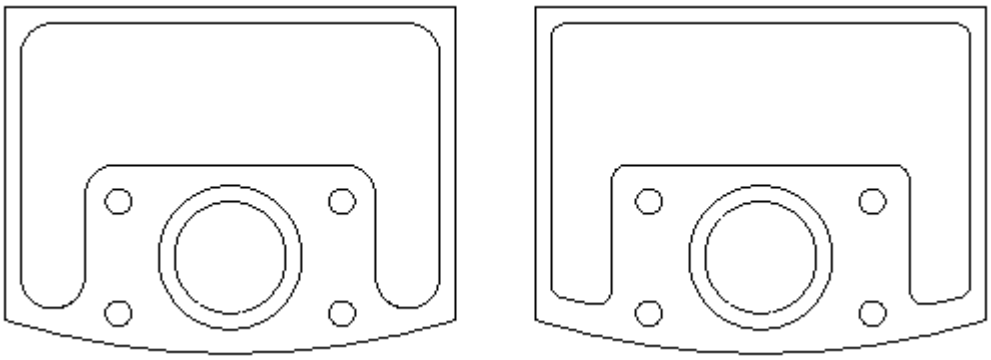

Figure 7-7 Composite Pulley Housing (Part # ARD-PTH-14A)

Since it is purely for weight reduction the part was reshaped to reduce costs. The redesigned part Figure 7-7 (left) was made to allow everything (except the 4 mounting holes) to be made using a single half inch general purpose end mill. The original part in Figure 7-7 (right) is displayed for comparison purposes.

The tensioning bracket (part number ARD-PTH-16) also had problems similar to the composite pulley housing. Figure 7-8 shows the old design on the right and the new design on the left. Both of these parts are made from steel and the cutout areas serve only for weight reduction. To reduce machining time the part on the left was redesigned so that it could be made entirely from a CNC mill using a single half inch end mill. The base portion shape was modified to increase area available to weld to and the radius of the cantilever portion was increased.

Copyright 2013, AHMCT Research Center, UC Davis

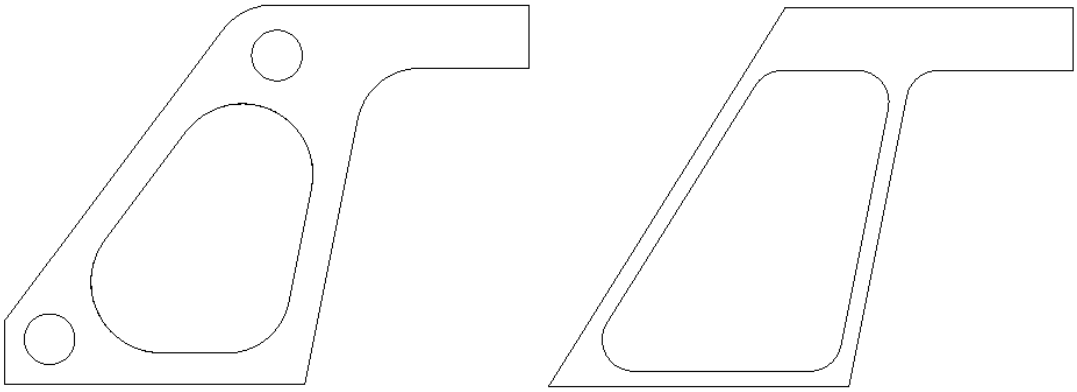

Figure 7-8 Belt Tensioning bracket (Part # ARD-PTH-16)

Each arm of the four arms on the Tumbleweed Processor is attached to the main cutter head with four custom pillow blocks and a shaft. Two of the pillow blocks are part of the arms and two are attached to the head unit. This acts as a hinge point for the arms relative to the head.

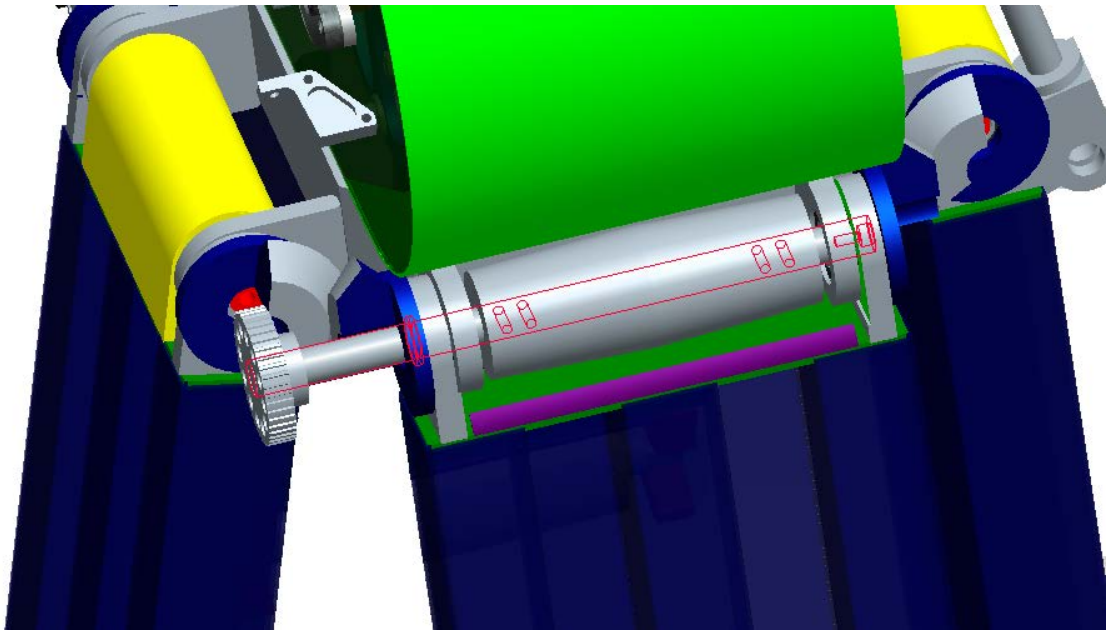

Figure 7-9 Belt Pulley and Arm Mount Pin

In the original design each pillow block contained a bearing. Two of the tumbleweed processors four arms have a conveyor belt system designed to pull the tumbleweed into the cutter head. As seen in Figure 7-9 the arms with the conveyor belts have their main pivot pin rigidly connected to the pulley that drives the belting. This pin passes through four distinct pillow blocks, two on the arms and two on the head. In this case the pin is constantly spinning as it drives the belting, so every tab through which the pin passes

Copyright 2013, AHMCT Research Center, UC Davis

must have a bearing. These arms were left unchanged; however the other two arms were modified.

The two arms without the conveyor belt system do not have pins that are in constant motion. When the arms open and close like a claw, the pin can be viewed as being rigidly attached to the arm and moving relative to the head. In this case only the pillow blocks on the head side require bearings. To simplify the design, improve reliability, and increase strength, the bearings were removed from the pillow blocks on the arms shown in Figure 7-10.

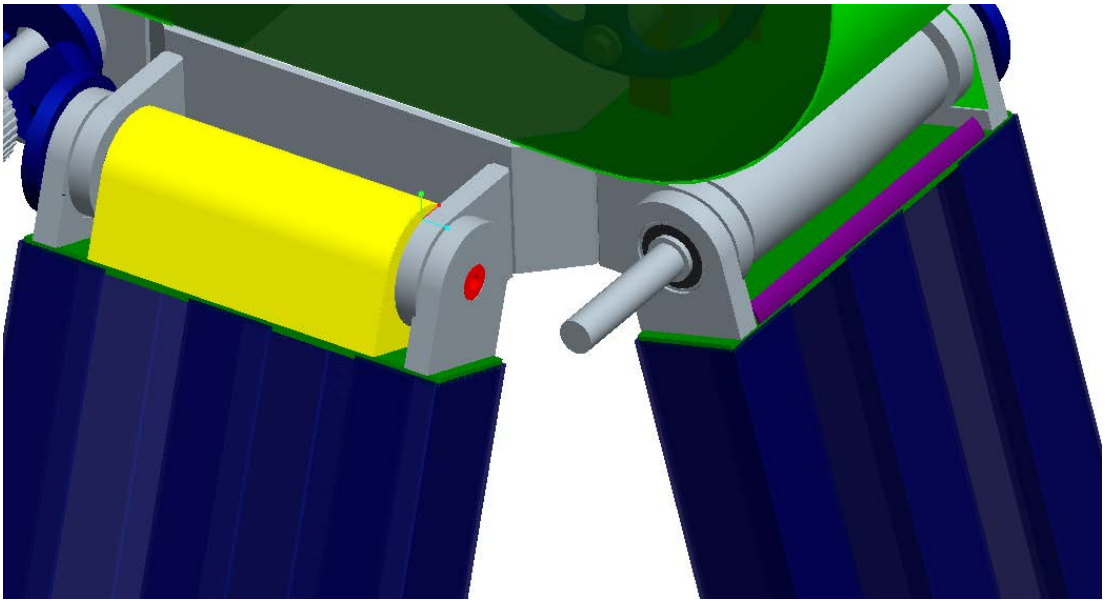

Figure 7-10 View of Arm Tabs (Part # ARD-ARM-17)

Only one of the four arms is powered by a hydraulic cylinder controlling its ability to open and close the arms. The power to the remaining three arms is transmitted by a gear train welded to the side of the arm pillow blocks shown in Figure 7-11.

Copyright 2013, AHMCT Research Center, UC Davis

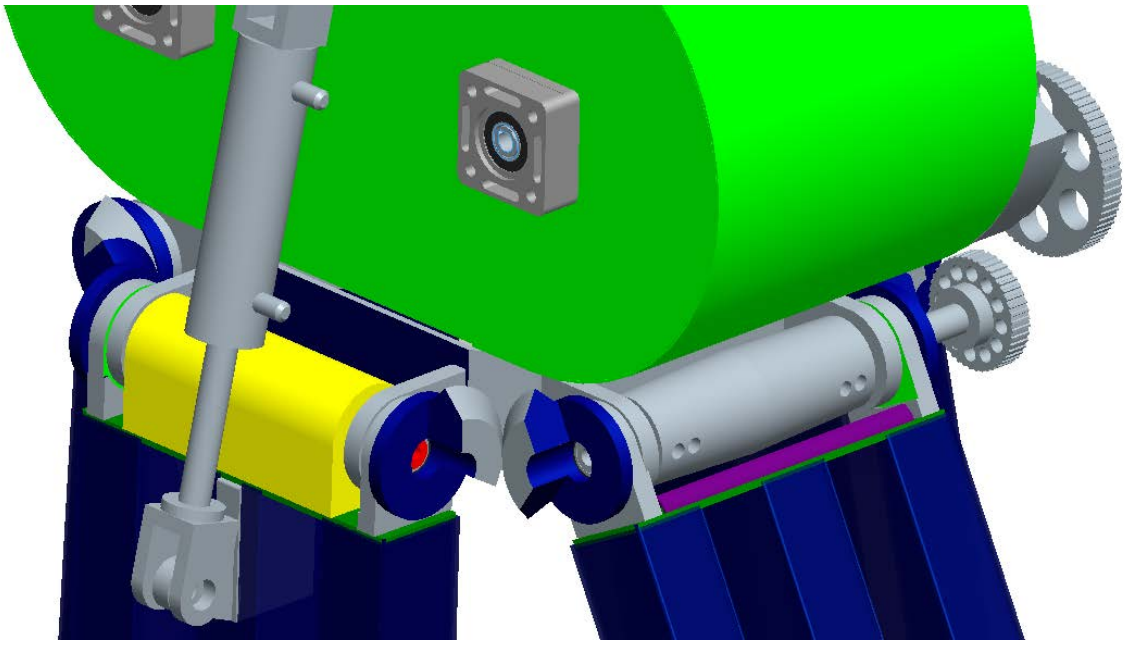

Figure 7-11 Arm Gear Drive

The gear train is a series of miter gears. These gears all had to be custom modified versions of stock gears for weight savings and for clearance. A CNC end mill program was developed using ProE to make the eight gears in a uniform manner. Getting the gears to mesh properly is a challenge. In a perfect world such as in the ProE model it is not an issue because all of the dimensions are exactly known however in the real world things are not perfect. Each of the pillow blocks on the arms and head unit shifted slightly when they were being welded. These small changes away from perfection make it necessary to adjust the total length of each gear by machining its flat back side so that the gears will mesh correctly.

At this point the system is workable as a custom made and expensive prototype but due to its very difficult maintenance it is not very suitable for extended testing or commercialization. Also, due to difficult maintenance of parts that are expected to wear rather quickly, it could discourage potential adopters of the technology. Some key points still need to be improved upon.

- The cutter and belt drive system is still made from many small pieces bolted together increasing possible failure points.
- There are no provisions allowing the cutting blades to be replaceable without major disassembly.

Copyright 2013, AHMCT Research Center, UC Davis

- The blade spacers (made of plastic) are not replaceable without major disassembly.
- The arms with their conveyor belt systems can not be tested without the cutting heads being installed and running at full speed.

To resolve these remaining issues a new cutter head along with the associated drive system had to be designed.

7.5 High Performance Cutter Head

The High Performance Cutter Head (HPCH) replaces the old cutting mechanisms with a totally new part. It is intended to resolve the remaining issues with the system and improve its overall viability as a commercial product. The HPCH reduces manufacturing time and cost by using fewer parts, while also eliminating field maintenance issues by allowing the blades and spacers to be totally replaced without disassembling the hydraulics, belts, and related components. The HPCH also allows the arms to be run and tested without the cutting heads installed.

As seen in Figure 7-12 the HPCH cutter head is composed of the main axle, two flywheels, four fixed shafts, one stock shaft collar, one locking bolt, 12 free swinging blades which attached to fixed shafts, 16 Delrin spacers between the blades, and some bolts.

Copyright 2013, AHMCT Research Center, UC Davis

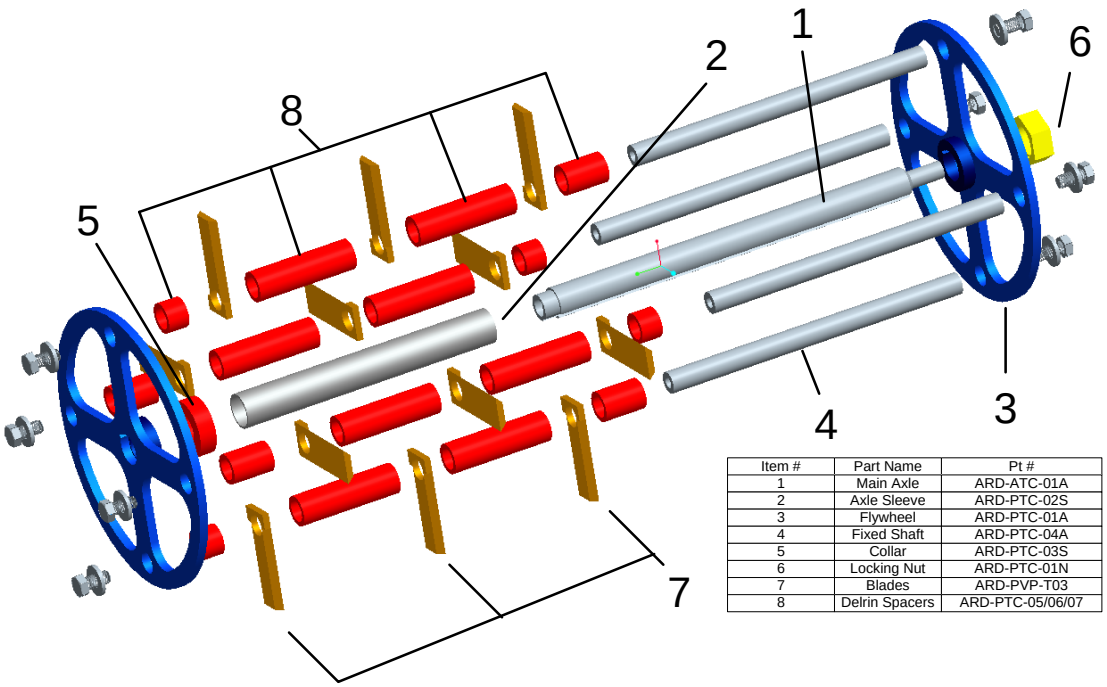

Item #	Part Name	Pt #
1	Main Axle	ARD-ATC-01A
2	Axle Sleeve	ARD-PTC-02S
3	Flywheel	ARD-PTC-01A
4	Fixed Shaft	ARD-PTC-04A
5	Collar	ARD-PTC-03S
6	Locking Nut	ARD-PTC-01N
7	Blades	ARD-PVP-T03
8	Delrin Spacers	ARD-PTC-05/06/07

Figure 7-12 Cutter Exploded View

The center piece of the design is the continuous keyed stock shaft (part number ARD-ATC-01S). This relatively simple part replaces the old drive shaft, motor coupling, and belt coupling parts (part numbers ARD-PTC-03A, ARD-PTC-09A, and ARD-PTC-08A). Replacing three parts with one will eliminate bolted joints, improve strength, improve rigidity and increase reliability. The three replaced parts were some of the most expensive and time consuming parts to machine in the cutting head system, so this will also save a lot of time and money in manufacturing. The drive shaft is a stock 2.23 cm (0.878 inch) diameter shaft with a 0.19 cm (3/16 inch) key. The right side has been turned down to 1.9 cm (0.75 inch) diameter to allow for a bearing and has a 1.27 cm (0.5 inch) diameter internal bore with a 0.32 cm (1/8 inch) keyway to attach to the motor shaft. The left side has also been turned down to 1.27 cm (0.5 inch) to accommodate a bearing.

In addition to improving rigidity and reliability as mentioned above the new single keyed shaft design allows for more operational flexibility. With this new design the motor connects directly to the main axle on the right and directly to the bolt reduction pulleys on the left. This allows the whole system to be operated and testing using only the shaft (without the flywheels and blades installed). The ability to be operated without

Copyright 2013, AHMCT Research Center, UC Davis

the flywheels and blades installed is a great advantage for testing purposes by removing the hazard of the blades. It also allows for the system to be run at lower speeds without worrying about the flail blades swinging improperly. The new design also allows the system to be operated with just the shaft and flywheels installed but without the blades or cutter bars. This is useful from a maintenance standpoint because it allows for a way to check the dynamic balance of the flywheels at low speeds while removing the uncertainty of the free swinging blades.

The HPCH uses a redesigned flywheel that is stronger, and has a larger safety factor, and both sides of the cutting head use the same flywheel. This new design can be seen in Figure 7-13. All pervious versions of the flywheel had bolt holes in the spokes to bolt it to the drive axle flanges. These holes created stress concentrations and greatly weakened the part. All those holes were removed and replaced with a single reinforced hub section that is welded on to the center of the flywheel to compensate for the added stress from the keyway. This allows the key to be longer and take a higher load before it shears.

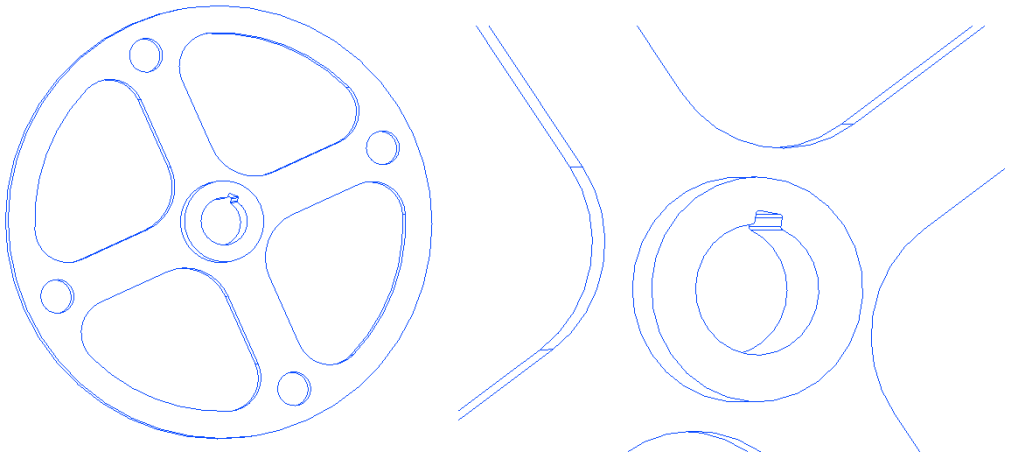

Figure 7-13 HPCH Flywheel (Part Number ARD-PTC-01A)

The cutter acts in a way similar to a commercial flail mower design. The blades are all allowed to swing freely about the fixed cutter bars. Each pair of blades is kept apart with a Delrin spacer that slides onto the shaft. Delrin is a type of strong plastic, and this material will wear as pieces of the tumbleweed repeatedly hit the Delrin during the mulching process. These items will require regular inspection and routine replacement. To ensure that the maintenance is easy to accomplish, certain design aspects were included in the HPCH. The main design aspect is the module layout of the cutter head

Copyright 2013, AHMCT Research Center, UC Davis

itself. The four shafts on which the blades swing are attached to the flywheel via a bolt at each end. On the outside of the tumbleweed mulching tool there is an access door that allows these bolts to be removed from each side. Once the bolts are removed each fixed cutting shaft can be slid out and all the blades and spacers will drop out of the machine so that they can quickly be changed. Removing the cutting bars, individually or all at once, does not effect the placement of the flywheels of the main drive axle and no other disassembly is required. To reassemble the cutters each cutting bar must be slid partially into the cutter and then each blade and spacer can be slid on in order from the center of the cutting system to replace the blades and spacers. This maintenance ability greatly reduces down time and can be completed with a few simple tools. There is no need to take apart any of the hydraulics, the belts, or the arms. This easy to perform maintenance will also help to ensure that he maintenance is actually completed and not ignored.

7.6 HPCH System Analysis

Cutting tumbleweed seems like an easy task until the thicker parts of the stem and stalk inside the plant are considered. Combine this woody material with the 3000RPM rotation speed of the cutting heads and it is clear that this is an area of high stress that must be analyzed to ensure safety and reliability of the part. The 3000 RPM speed is required for efficient flail action and cannot be reduced much. Equation 7.1 represents the maximum safe rotating speed of a flywheel made from plate steel with 4 spokes and 20.2 cm [8 in] diameter [36], where C = 1 (constant speed motor), A = 0.9 (4 spokes), M = 2.75 (plate steel), E = 1 (solid rim), K = 1840 (rim thickness ~3.75% of diameter), and D = 8/12 (outside diameter in feet).

$$N = \frac{CAMEK}{D} \tag{7.1}$$

The results of this very simple calculation say that a flywheel of this general shape should be safe up to 6797 RPM; however, this is for a standard energy storing flywheel with no external forces acting on it. In the case of the Tumbleweed Processor there are external reaction forces from the cutting blades imparted into the flywheel as the blades impact the tumbleweed. It is expected that the external forces on the flywheel will lower the safer operating speed of it as compared to the result of Equation 7.1.

Copyright 2013, AHMCT Research Center, UC Davis

The reaction force imparted by a flail blade onto its axle of rotation in the tangential direction is 80-120N (18-27lbf) when cutting 0.63cm (0.25 inch) diameter dowels [35]. Taking into account that there are 3 blades per shaft, one can expect 240-360N (54-81 lbf) of reaction force imparted onto the flywheel per shaft. It is obvious that at least one shaft will be involved in cutting; it is likely that two shafts will be involved in cutting at any given time, but is it possible that three or four could be involved? The four cutting shafts are placed at 90 degrees to each other; if two are near the bottom in the cutting zone, then two must be near the top in an area would normally be considered clear. It is possible, however unlikely, that in some special cases that parts of mulched tumbleweed could become lodged into the upper section of the cutting head. In this case the blades would impact the stuck portion on every pass at the same time that the lower blades are cutting into fresh new parts of the plant, so all four blades would be impacted at the same time. At the instant that all 16 blades from the four cutting bars impacted the plant, the motor, at max, could provide a 1921N (432 lbf) applied force to the flywheel. If the motor used is able to resist this force then a 195 N-m (144 ft-lb) torque would be seen on the motor shaft. The hydraulic motors used in this application, however, cannot possibly supply this kind of torque so in reality the system would stall out before this condition could happen, and this would act as a safety feature. The remedy would to simply shut down the machine and remove the jam.

To analyze the system the Finite Element Analysis (FEA) method was used under worst case conditions. Two assumptions were used to generate the worst case scenario. All four cutting bars are assumed to be impacted at once, and the motor can supply as much torque as needed. The FEA analysis was done in Pro Engineer Wildfire 4 Mechanica using the same solid models that the parts are created from. The constraints on the model attempt to mimic the real world situation. The flywheel key walls are used to resist the Y rotation, the back face of the hub that would butt up against the collar was used to resist X and Z rotation as well as Y translation, and the internal portion of the hub that contacts the axle was used to resist translation and rotation in X and Z. Care was taken to avoid over constraining the model. Over constraining a model with any type of FEA will make the parts artificially stiff which may yield false results even if it still converges. In an attempt to avoid stress concentrations which may cause the FEA not to

Copyright 2013, AHMCT Research Center, UC Davis

converge, a small radius of 0.5mm (0.02 inch) was added to the sharp edges of the keyway. Tangential loads of 180N were placed on the cutting bar mounting holes to simulate the forces from cutting on each flywheel. Radial loads of 1502N were added to the mounts to take into account the centripetal forces on the flywheel imparted by the mass of the cutter blades and bars as the whole systems spins about its central axis. Finally a rotation of 3000 RPM was added to the flywheel itself to take into account internal centrifugal forces generated from the rotation.

The FEA was run using a multiple pass adaptive method with Von Mises stress as one of the convergence criteria considered. As seen in Figure 7-14 the maximum stress obtained from this analysis was 52 mPa (7500 PSI). The flywheel is constructed from 1018 steel which has a yield strength of 386 mPa (56000 PSI). For this loading condition, with its resulting stresses, Equation 7.2 can be used to calculate the safety factor.

$$\sigma' = \frac{S_y}{n} \tag{7.2}$$

In this case a safety factor of 7.4 is obtained for the flywheel. Again looking at Figure 7-14 it can be seen that for the FEA the global strain energy and the Von Mises stress both converge nicely. The Von Mises stress is based on some local maximum stress location in the part; since it is based on a local maximum location it is very sensitive to stress concentrations. The convergence of the Von Mises stress measure implies that the stress concentrations in the part did not become singularities in the analysis. Both measures showing the classical shape of convergence inspires some confidence in the solution.

Copyright 2013, AHMCT Research Center, UC Davis

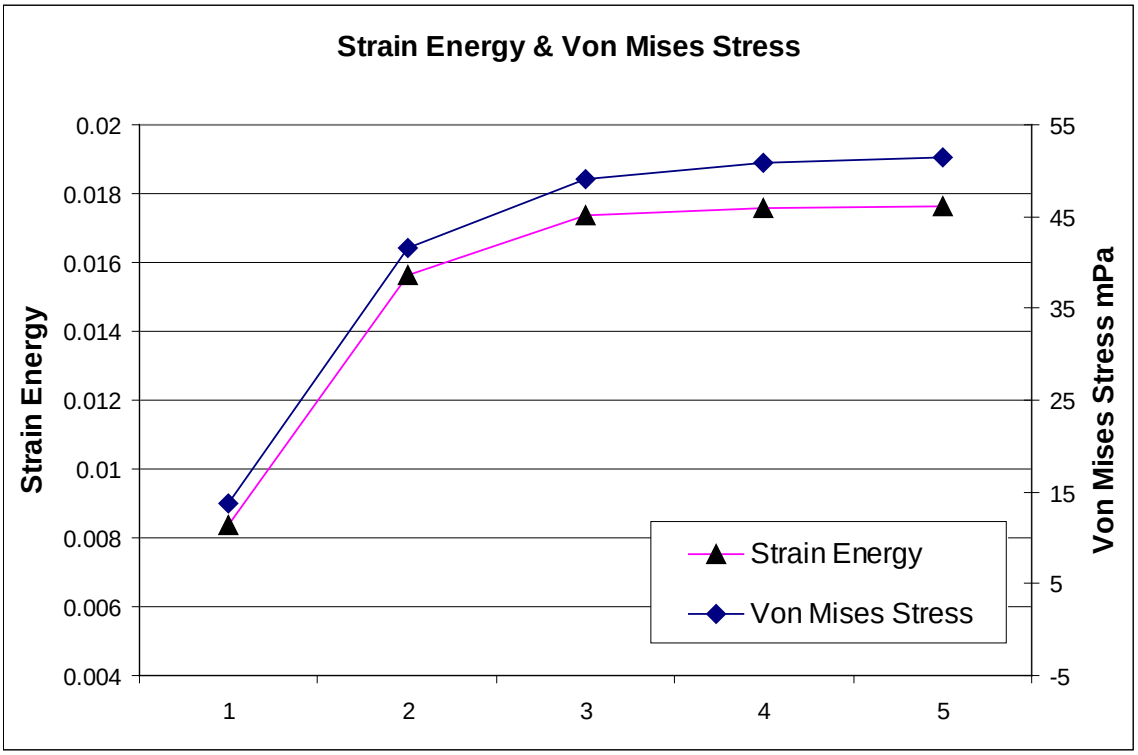

Figure 7-14 FEA Convergence

To be sure that the results of the FEA could be trusted, some hand calculations were done on a similar though much simpler case. If the FEA is accurate the hand calculations should be in the same ballpark as the FEA result. The first case to consider is the flywheel approximated by a thin disk with a hole in its center. The parameters used for this model are shown in Table 7-1.

Table 7-1: Thin Disk Parameters

Disk Parameters	Value	Unit
a_L (Radius to outside)	10.16	[cm]
a_0 (Radius to inside)	2.54	[cm]
ν (poisons ratio)	0.3	
ρ (density)	7.8	[gm/cm^3]
V (angular velocity)	314	[rad/sec]
P (position of interest)	5.0	[cm]

The position of interest (P) in this calculation is measured as the radius from the center of the disk to the point of interest. In this case half of the radius of the disk was chosen. This point lies on the spokes of the flywheel which is a high stress area and an easy area to compare to the FEA results.

Copyright 2013, AHMCT Research Center, UC Davis

For the hand calculations there are two stresses of interest on the disk imposed by the 3000RPM spinning, the radial stress and the circumferential stress. Of these the circumferential stress will be larger and it will be greatest right at the edge of the hole cut in the center of the disk for the shaft to attach [37]. The following equations allow calculation of the radial and circumferential stresses.

$$\sigma_r = \frac{3+\nu}{8}\rho\Omega^2\left(a_L{}^2 - a_0{}^2\right) \tag{7.3}$$

$$\sigma_\phi = \frac{3+\nu}{8}\rho\Omega^2\left(a_L{}^2 + a_0{}^2 + \frac{a_L{}^2 a_0{}^2}{r^2} - \frac{1+3\nu}{3+\nu}r^2\right) \tag{7.4}$$

The radial stress is calculated to be 1845 kPa, and circumferential stress is found as 4668 kPa. In this case the Radial and Circumferential stresses are the principal stresses and so they can be used to directly calculate the Von Mises Stress using Equation 7.5. The Von Mises stress for this case is 4072 kPa (590 PSI).

$$\sigma' = \sqrt{\sigma_1{}^2 - \sigma_1\sigma_2 + \sigma_2{}^2} \tag{7.5}$$

The FEA stress reported in a similar location on the flywheel disregarding the centripetal loads form the cutting mechanisms and the tangential loads from the cutting reactions is between 3560 and 4730 kPa (532-686 PSI). These values are similar to the thin disk calculations thus verifying the FEA results.

The flywheel has a lot of kinetic energy while the machine is operating; if it were to catastrophically fail it would cause major problems. To guard against this, a second verification was done against the FEA for the flywheel. For this second check one spoke of the flywheel is modeled as a bar of the same width and thickness. The bar is rotated about one end which lies on a point that represents the center of the flywheel. This is large simplification of the flywheel, but combined with the result of the FEA, and the thin disk calculations, it will serve to add evidence to the fact that the design is safe. It is assumed that the center of gravity of the bar is traveling along a circular path with a radius of 5 cm (2 inches) calculated using Equation 7.6.

$$R = \frac{AL}{2} \tag{7.6}$$

Copyright 2013, AHMCT Research Center, UC Davis

The mass of the center of gravity is 0.18 kg (0.4 lbs) which is one quarter the total weight of the flywheel. The force in the center of the bar, when held under a constant rotational velocity, is the centripetal acceleration times the mass.

A stress of 7500 kPa (1100 PSI) is derived at the center of the spoke under these conditions. The FEA stress reported in a similar location on the flywheel disregarding the centripetal loads form the cutting mechanisms and the tangential loads from the cutting reactions is between 3600 and 4700 kPa (520 - 680 PSI). The FEA result is similar in magnitude to the hand calculation which was also similar to the thin disk calculation so it serves to reinforce the results from the FEA. It is clear from these tests that the flywheel will not fail under the assumed conditions of these calculations.

There is one other potential failure area of interest in the cutting system; the keyway where the motor attaches to the drive shaft. As mentioned earlier, the external forces on the flywheel from the cutting blades can impart a 195 Nm (144 lb-ft) torque onto the motor shaft (assuming the motor could supply that kind of torque). Since the shaft has a diameter of 1.27 cm (0.50 inch) this translates into a 30.7 kN (6900 lb) force onto any type of key which transmits the power from the motor shaft to the flywheel and cutter assembly. The ANSI standard key for a 1.27 cm (0.5 inch) shaft is 0.32 cm (1/8 inch) [36]. This size key must be used to make sure the system is compatible with the commercially available parts being used as well as the motors themselves. As a general rule, the key length should never be more than 1.5 times the diameter of the shaft. If it is any longer the key can twist and becoming stuck. In the case of the Tumbleweed Processor the dimensions of the motor shaft and the way it interacts with the cutter head limit the length of the key to 1.9 cm (0.75 inch) which is less than the critical length. Using these dimensions the key area is 0.61 square cm (0.094 square inches).

Assuming the worst case loading scenario and assuming that the motor could supply the necessary torque, a shear loading of 508000 kPa (74000 PSI) would be applied to the key. One possible key stock material is Durelloy. Durelloy's shear strength is 482000 kPa (70000 PSI) [38]. This is just slightly below the shearing force that is applied to the key. In this case the key will shear and act as a failsafe system. This is reassuring to know but in reality it will never happen. The hydraulic motors cannot actually supply

Copyright 2013, AHMCT Research Center, UC Davis

enough torque to generate the shear force required. Instead the hydraulic motors will stall long before this event occurs.

7.7 Tumbleweed Processor Testing Results

Limited testing of the tumbleweed processor was completed in the lab environment. Belts with a 2.5 cm (1 in) high ribbing were installed and various sized tumbleweeds up to 1.5 m (4.5 ft) were placed under the unit. The clamping action of the arms was used to crush the tumbleweed and draw it into the opening of the shredder. The crushing action was very effective but the conveyor belts were not able to pull the tumbleweed upward. Since only two of the four arms are belted, the friction between tumbleweed and the remaining static arms was not over come with the belt action. Significant redesign of the machine is required to install belts with a taller profile.

The Tumbleweed Processor has clearances of only about 2.5 cm (1 inch) between the top arm roller and egg shaped body. Spikes limited to this height will not snag the tumbleweed effectively. Belts and chains used in the agriculture industry are configured in a variety of styles and the processor would have to be redesigned around the dimensions of a commercially available spiked belt that can snag the crushed tumbleweed. A commercial product that could work similar to spikes is a paddle type belt seen in Figure 5-1.

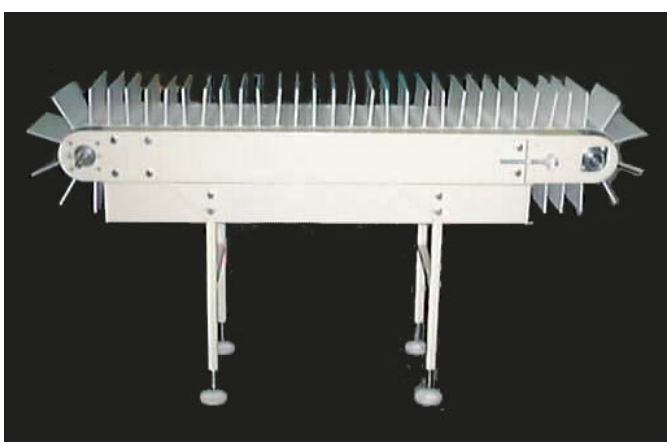

Figure 7-15 Paddle Belt [39]

Another recommended improvement is to try and reduce the overall weight of the Tumbleweed Processor. The Tumbleweed Processor is a heavy machine and weighs far more than any of the other ARDVAC attachments. The weight of the system due to

Copyright 2013, AHMCT Research Center, UC Davis

geometry is basically fixed and is likely to require, weight reduction milling on parts has already been used in many places, and dimensions have been optimized to make the device as small as possible while retaining functionality. Light-weight metals, such as aluminum, can be used in the main structure of the machine to further reduce the weight. Low stress parts such as the egg shaped head unit, the two arms without conveyer belts, and some of the belt system components, could be made from aluminum sheet metal. The cutting heads, however, should not be reduced further in weight because this would likely lower the safety factor.

7.8 Conclusion

In this chapter, the design of the Tumbleweed Processor was introduced and various problems that would inhibit its construction and operation were identified. Some of the key problems with the original design were fixed by modifying parts that already existed. After all the parts were modified it was clear that too many problems still existed with the cutting head. This prompted the development of the high performance cutting head. The high performance cutting head is a totally new design that was made to work well with already existing parts of the machine while solving all of the remaining issues that were identified. The high performance cutting head system is simpler, cheaper to build, and perhaps most importantly much easier to maintain. Once the high performance cutting head conceptual design was complete analysis of it was performed. The analysis of the cutting head system includes FEA and hand calculations done to validate the FEA results. Finally the motor/cutting head interface was considered and failure analyses conducted. Under the assumptions of the analysis it is clear that the system will not fail.

Preliminary testing of the tumbleweed was not successful since the belts were not able to draw the crushed plant into the shredder. A full redesign of the machine is required. Prior to this step, it is recommended

Copyright 2013, AHMCT Research Center, UC Davis

CHAPTER 8: SUMMARY AND CONCLUSIONS

This project objective was to further the development of safer and more efficient roadside maintenance operations. The focus was on maintenance efforts to collect litter and debris and control vegetation on roadsides. In the initial phase of the project, the maintenance equipment and methods were reviewed and assessed. This was achieved by performing a literature search, internet search and patent search. The resulting information was compiled and shared in a web based document titled the Vegetation and Debris Control Toolbox. The information in the toolbox described present day equipment and methods. It also included concepts of equipment that could be implemented in the future with appropriate development efforts. This toolbox was designed to efficiently provide the information to persons working in the field and those involved in developing solutions through research and development. A method of grading the value of existing and potential alternatives was developed with the application of fuzzy logic. Examples of the grading process were provided to show valuations based on safety, environmental impacts, cost and other factors. Maintenance of a web based toolbox, such as the one developed in this project, is considered important to the process of developing ideas that can lead to improvements in equipment and operations. Use of a graphic intensive toolbox is strongly recommended. By presenting and using a grading system to assign values, the basis for selecting ideas for further development is better understood.

The toolbox is a very flexible tool, and because it is based on the internet, it can evolve as technology and trends change. This flexibility and evolutionary ability is what makes the Toolbox such a powerful tool, but that also means that the Toolbox will never be completed. The toolbox will always be a work in progress. Caltrans must remain involved in the development of the Toolbox to make sure it is progressing in a useful and pragmatic way so that the intended users of the Toolbox can depend on the Toolbox to pick the best available tool for the particular job scenario. Channels of communications, and feedback, from all levels in Caltrans, are necessary to ensure that the language of the toolbox remains useful and familiar to workers in Caltrans who are the end user. Each time a new section is added to the toolbox, feedback from Caltrans should be obtained.

Copyright 2013, AHMCT Research Center, UC Davis

Once the toolbox nears a more stable and more complete version, an expanded survey of it as a whole could be done at the maintenance yard level to get feedback on usability

As mentioned earlier, the toolbox is considered an ever evolving work that changes as the technology changes. To ensure that the toolbox stays relevant to current users it must be updated regularly. As trends in technology and current practices change, the toolbox may be expanded. Certain categories of equipment, can be added as needed. For example a section on storm water debris separation and treatment could be included.

Tools intended to be used with the ARDVAC were developed to allow vegetation cutting and collecting while collecting litter. In this project, two concept tools, a rotary cutter and a reciprocating cutter were tested on grasses and woody stemmed weeds. A third tool was assembled and tested for use on tumble weeds. Testing of the tools has demonstrated the strengths and weaknesses of each concept. Caltrans has begun operations of pre-production versions of the ARDVAC. As the operators of the ARDVAC become familiar with its capabilities and the design is refined, it is expected that it will find new applications. It is recommended that these vegetation cutting tool concepts be considered for further development once operations with the ARDVAC have provided needed user experience.

Copyright 2013, AHMCT Research Center, UC Davis

REFERENCES

[1] Faigin, Daniel. "California Highways: Statistics." Everything You Ever Wanted To Know About Numbered Highways in California. Aug 2008. Sep 2008 <http://www.cahighways.org/stats.html>

[2] California. Caltrans. "California Roadsides A New Perspective." Sacramento, CA: Jones & Stokes Associates, 1997.

[3] "California Legislative Analyst's Office." Cal Facts 2004. LAO. Sep 2008 <http://www.lao.ca.gov/2004/cal_facts/2004_calfacts_econ.htm>

[4] "Highway Worker Safety." Welcome to the State of California. Caltrans. Sep 2008 <http://www.dot.ca.gov/hq/paffairs/about/safety.htm>

[5] "Division of Research and Innovation." Welcome to the State of California. 2007. Caltrans. Sep 2008 <http://www.dot.ca.gov/newtech/>

[6] "Extending the reach of Caltrans." AHMCT. 2007. UC Davis. July 2008 <http://www.ahmct.ucdavis.edu/>

[7] "Welcome to the State of California." Roadside Management Toolbox. Caltrans. Sep 2008 <http://www.dot.ca.gov/hq/LandArch/roadside/index.htm>

[8] California. Caltrans. "Environmental Impact Report on Caltrans' Vegetation Control Program." Sacramento, CA: Jones & Stokes Associates, May 1992,

[9] Teeter-Balin, Jonah, *Feasibility of Alternative Vegetation Maintenance Control Technologies* (UC Davis Thesis 2004)

[10] California Department of Transportation (Caltrans), Integrated Maintenance Management System (IMMS), Fiscal Year 2004/2005 Vegetation Control Plan Report, July 10, 2008

[11] DiTomaso, Joseph. "Yellow Starthistle Information" Weed Science Program University of California Davis. June 2008. <http://wric.ucdavis.edu/yst/yst.html>

[12] McGowen, Tamie. "Caltrans and CHP Launch Aggressive Statewide Litter Spring Clean-Up Effort," May 2008. Caltrans. July 2008 <http://www.dot.ca.gov/hq/paffairs/news/pressrel/07pr8.html>

[13] Washington State. Department of Ecology. "Review of US Litter Abatement." Publication #98-501, December 1998.

[14] California. Caltrans. "Fact Sheet District 11 Litter Program." San Diego, CA: Jan 2000. Dec 2008 <http://www.dot.ca.gov/dist11/facts/litter.htm>

[15] Befco. "Hurricane H40 Flail Mower" Befco. December 2008 <http://www.befco.com/products/hurricane/h40.html>

[16] McKenzie "TV-145 Loader Mounted - Brush Master Boom Mower Information" McKenzie Supply & Equipment, Ltd. December 2008 <http://www.mckenzieltd.com/tv_bmbm/tv_bmbm2.jpg>

Copyright 2013, AHMCT Research Center, UC Davis

[17] Evatech. "Hybrid RCLM2008 Lawn Mower" Evatech. December 2008 <http://www.evatech.net/>

[18] SS "Biography of Nevilles E. (Jim) Walker" March 2003. National Model Aviation Museum. August 2008.

[19] Homko Push Button Mowing, Homko. Robot Advertisement. Better Homes and Gardens, March 1954.

[20] Friendly Robotics. "RL1000 with Base Station." Robomow It mows. You don't. Dec 2008 <http://www.friendlyrobotics.com/robomow/rl1000/>

[21] Arsenault, Aaron. "Implementation and Validation of a Low Cost Sensor Array for Autonomous Roadside Mowing." (MS thesis, University of California Davis, 2007).

[22] Green Steam Technology. "Product Information." GreenSteam Technology Ltd. Nov 2008 <http://www.greensteamtech.com/>

[23] Schafer, Kristin, Reeves, Margret, Spitzer, Skip, and Kegley, Susan. "Chemical Trespass Pesticides in Our Bodies and Corporate Accountability." Pesticide Action Network North America. May 2004

[24] Office of Pollution Prevention and Toxics, US EPA, OSHA, Div of Surveillance, Hazard Evaluations and Field Studies, HIOSH, CDC: Occupational fatalities associated with 2,4-dichlorophenol (2,4-DCP) exposure, 1980-1998. MMWR Morb Mortal Wkly Rep 49(23):516-518, Jun 16, 2000 <http://www.safe2use.com/health/2-4d-Dichlorophenol.htm>

[25] "The poisoning of public thoroughfares." Californians for Alternatives to Toxics. Arcata, CA: 1999

[26] Prull, Greg and Ard, Jeff. "Sunburst Thermal Weed Control Technology." Sunburst Inc. 2007 <http://www.thermalweedcontrol.com/SunburstTechnology.pdf>

[27] TNC. "Applying Foam" TNC Global Invasive Species Team Page. <http://tncinvasives.ucdavis.edu/tools/hotfoam.html>

[28] "Waterjet Seminar: Waterjet White Paper." Flow International Corporation. 2002

[29] "Litter Collection Equipment." H. Barber and Sons. June 2008 <http://www.hbarber.com>

[30] "Schwarze Industries" ABM Equipment & Supply Inc. December 30th 2008 <http://www.abm-highway.com/schwarze.htm>

[31] "Fuzzy Logic Toolbox For Use with Matlab Version 2." The Math Works June 2001

[32] Google Earth. Version 4.3.7284.3916. Web-Software. Mountain View, CA: July 2008

Copyright 2013, AHMCT Research Center, UC Davis

[33] Richardson, Benjamin. "Conceptual Design of a Vegetation Processing End Effector for an Automated Roadway Debris Vacuum Vehicle." (MS thesis, University of California Davis, 2002).

[34] Henry, Au; Bieniek, Ryan; Lam, Trung; Leung, Winnie. "Tumbleweed Design Report" 2005

[35] Bieniek, Ryan. "Design and Analysis of a Tumbleweed Mulching Device for an Automated Roadway Debris Vacuum." (MS thesis, University of California Davis, 2005).

[36] Oberg, Erik; Franklin, Jones; Holbrook, Horton; Ryffel Henry. Machinery's Handbook. 24th. New York: Industrial Press Inc, 1992.

[37] Pikey, Walter, Formulas for Stress, Strain, and Structural Matrices. New York: John Wiley & Sons, Inc, 1994.

[38] "Durelloy Key Stock." Ameralloy. Nov 2008. <http://www.ameralloy.com/pdfs/pages/durelloy_key_stock.pdf>

[39] "Rusmail Conveyor Archive News 31/01/03" Rusmail Conveyor Systems. Dec 2008. <http://www.rusmailconveyors.co.uk/pages/rusmail_news0103.html>

[40] A. Porterfield, "Development of a Telerobotic Hose Positioning System for an Automated Roadway Debris Vacuum Vehicle," M.S. Thesis, MAE, University of California, Davis, Davis. CA, 2001

[41] Vacall Industries, "Products," Sept. 2008, Available: http://www.vacallindustries.com/

[42] AHMCT. Automated Litter Bag/Debris Collection Vehicle." University of California, Davis. Oct 2008. Available: http://www.ahmct.ucdavis.edu/index.php?title=DebrisRemoval

[43] G. Burkett and M. Jones. "Debris Removal Attachment." AHMCT PowerPoint Presentation.

[44] Caltrans Maintenance Manual, Caltrans, Sacramento, CA, 2006, Ch C2

[45] K. Chew. "Design and Analysis of a Tool Changer and Tool Holder for an Automated Roadway Debris Vacuum." M.S. Thesis, MAE, University of California, Davis, Davis, CA, 2006.

[46] R. Harker. "Mechanical Design and Analysis of a Rotary Impact Cutting Fixture for an Automated Roadway Debris Vacuum." M.S. Thesis. MAE, University of California, Davis, Davis, CA, 2004.

[47] J. McPhee, "Design and Analysis of an Oscillating Cutting System for a Vehicle-Mounted Automated Roadway Debris Vacuum." MAE, University of California, Davis, Davis, CA, 2005.

Copyright 2013, AHMCT Research Center, UC Davis

[48] S. Donohoe. "Study of Methods and Equipment for Vegetation and Debris Control." M.S. Thesis. MAE, University of California, Davis, Davis, CA, 2009.

[49] T.R. Mincy, M. W. Latham, and B. A. Richardson. "Development of a Prototype Telerobotic System for Debris Vacuum Positioning." AHMCT, Davis, CA, Rep. 2001

[50] B. Schauer. "Testing of Vegetation Attachments for a Vehicle-Mounted Automated Roadway Debris Vacuum." M.S. Thesis. MAE, University of California, Davis, 2009

[51] R.S. Bieniek. "Design and Analysis of a Tumbleweed Mulching Device for an Automated Roadway Debris Vacuum." M.S. Thesis. MAE, University of California, Davis, Davis, CA, 2005.

[52] A. Chakraverty and et al., Handbook of Postharvest Technology: Cereals, Fruits, Vegetables, Tea, and Spices. New York: Dekker, 2003.

[53] P.O. Kettunen, *Wood Structure and Properties*, 1st ed. Switzerland: Trans Tech, 2006.

[54] *Standard Test Methods for Small Clear Specimens of* Timber, ASTM D 143, 2000.

[55] "Wood Handbook: Wood as an Engineering Material," FPL, Madison, WI, Rep. FPL-GTR-113, 1999.

[56] H. A. Alden, "Hardwoods of North America," FPL, Madision, WI, Rep. FPL-GTR-83, 1995.

[57] Black and Decker, "Outdoor Hedge Trimmers," Available: http://blackanddecker.com

[58] "GC Series Hydraulic Pumps," Haldex, Available: http://www.haldex.com/en/North-America/Applications-Products/Literature/Hydraulic-Systems-Literature/.

[59] "BCS 722 Harvester," Available: http://www.bcsshop.com/harvester.htm.

Copyright 2013, AHMCT Research Center, UC Davis

APPENDIX A Tree-of-Heaven Properties and Species Comparison Tables

Green Properties of Tree-of-Heaven		
Property	**Value**	**Unit**
MOE	6,343	Mpa
MOR	41,370	kPa
Comp. parallel	16,548	kPa
Comp. per.	2,620	kPa
Shear Parallel	7,239	kPa
Hardness	3,118	N

Comparing other Species to the Tree-of-Heaven								
Species (Green)	**MOE**	**MOR**	**Compression parallel**	**Compression perpendicular**	**Shear Parallel**	**Hardness**	**Composite Difference**	**Composite Difference Including Hardness**
Yellow Birch	10,300	57,000	23,300	3,000	7,700	3,600	32%	30%
Pignut Hickory	11400	81,000	33,200	6,300	9,400	N/A	89%	N/A
Sugar Maple	10,700	65,000	27,700	4,400	10,100	4,300	60%	56%
Pin Red Oak	9,100	57,000	25,400	5,000	8,900	4,800	50%	50%
Scarlet Red Oak	10,200	72,000	28,200	5,700	9,700	5,300	71%	71%
Overcup White Oak	7,900	55,000	23,200	3,700	9,100	4,300	33%	34%
Sweetgum	**8,300**	**49,000**	**21,000**	**2,600**	**6,800**	**2,700**	**14%**	**9%**
Black Willow	5,400	33,000	14,100	1,200	4,700	N/A	-28%	N/A
Yellow-Poplar	**8,400**	**41,000**	**18,300**	**1,900**	**5,400**	**2,000**	**-2%**	**-8%**

note: percent differences were calculated from each property and weighted equally to arrive at the composite number

Copyright 2013, AHMCT Research Center, UC Davis

(BLANK PAGE)

Copyright 2013, AHMCT Research Center, UC Davis

APPENDIX B Rotary Cutter KE Calculations and Mass Properties

1/3

Goal: to find the cutting Energy (ability) of the cutting assembly on a per blade basis (3 blades total)

$$T_B = \frac{1}{2} m_B V^{B^*} \cdot V^{B^*} + \frac{1}{2} I^{B/O} \omega_B^2$$

N = Ground Fixed Coord.
A = Hub Fixed "
B = Blade Fixed "
O = center of rotation and fixed point
P = Pin connecting Body A to B
B^* = C.O. of B
T = Tip of B

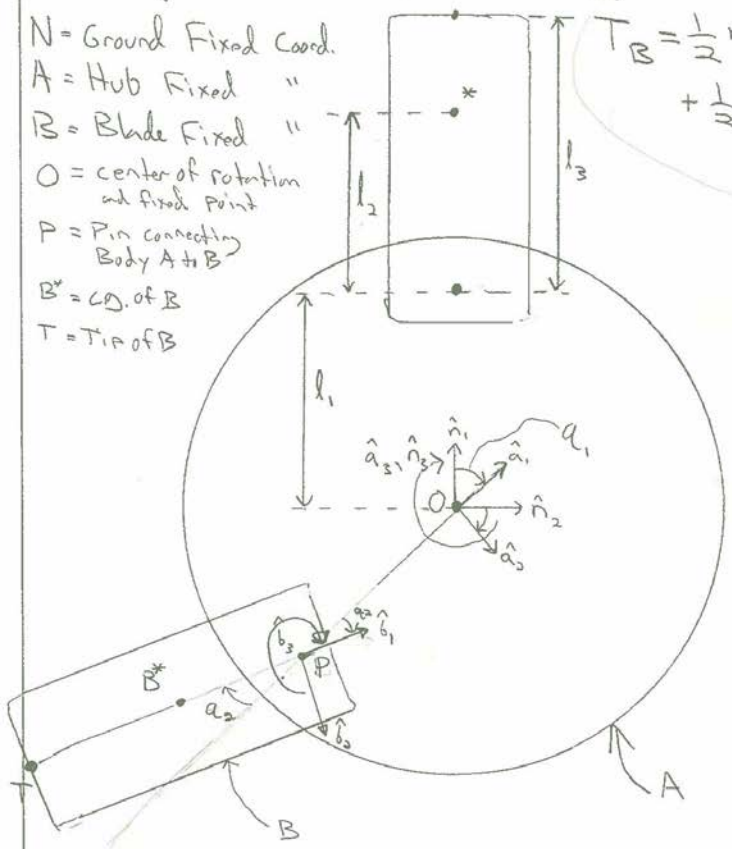

$l_1 = 0.03175\,m$ $\quad l_3 = 0.1143\,m\ (4.5\,in)$

$l_2 = 0.0423613\,m$

$\dot{q}_1 = 3000\ rpm = 3000\left(\frac{2\pi}{1}\right) radians\left(\frac{1\,min}{60\,s}\right) = 314.16\ rad/s$

$q_2 = 0$ until impact occurs! (free swinging)

$m_B = .05758\ Kg$

$\hat{b}_3$ direction $\rightarrow$ $I^{B/B^*} = 8.9884\times10^{-5}\ Kg\,m^2$, $I^{B^*/O} = m_B (l_1 + l_2)^2$ only when $q_2 = 0°$ $\quad T^{B/O} = T^{B/B^*} + T^{B^*/O}$

Copyright 2013, AHMCT Research Center, UC Davis

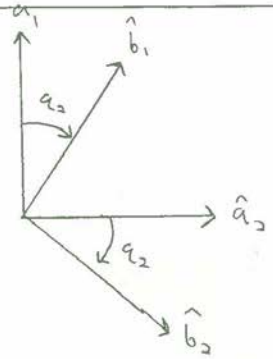

	$\hat{b}_1$	$\hat{b}_2$	$\hat{b}_3$
$\hat{a}_1$	cq_2	$-sq_2$	0
$\hat{a}_2$	sq_2	cq_2	0
$\hat{a}_3$	0	0	1

$$\underset{\sim}{{}^N V}^{B^*} = \underset{\sim}{{}^N V}^{P} + \underset{\sim}{{}^N \omega}^{B} \times \underset{\sim}{r}^{PB^*}$$

$$\underset{\sim}{{}^N V}^{P} = \cancelto{0}{\underset{\sim}{{}^N V}^{O}} + \underset{\sim}{{}^N \omega}^{A} \times \underset{\sim}{r}^{OP}$$

$$= \underset{\sim}{{}^N \omega}^{A} \times \underset{\sim}{r}^{OP} + \underset{\sim}{{}^N \omega}^{B} \times \underset{\sim}{r}^{PB^*}$$

$$\underset{\sim}{{}^N \omega}^{A} = \dot{q}_1 \hat{a}_3$$

$$\underset{\sim}{{}^N \omega}^{B} = \underset{\sim}{{}^N \omega}^{A} + \underset{\sim}{{}^A \omega}^{B} = \dot{q}_1 \hat{a}_3 + \dot{q}_2 \hat{b}_3 = (\dot{q}_1 + \dot{q}_2)\hat{a}_3$$

$$\underset{\sim}{r}^{OP} = -l_1 \hat{a}_1$$

$$\underset{\sim}{r}^{PB^*} = -l_2 \hat{b}_1 = -l_2 (cq_2 \hat{a}_1 + sq_2 \hat{a}_2)$$

$$\underset{\sim}{{}^N \omega}^{B} \times \underset{\sim}{r}^{PB^*} = \begin{vmatrix} \hat{a}_1 & \hat{a}_2 & \hat{a}_3 \\ 0 & 0 & \dot{q}_1 + \dot{q}_2 \\ -l_2 cq_2 & -l_2 sq_2 & 0 \end{vmatrix} \begin{matrix} \hat{a}_1 & \hat{a}_2 \\ 0 & 0 \\ -l_2 cq_2 & -l_2 sq_2 \end{matrix}$$

$$= -l_2 cq_2 (\dot{q}_1 + \dot{q}_2)\hat{a}_2 + l_2 sq_2 (\dot{q}_1 + \dot{q}_2)\hat{a}_1$$

Copyright 2013, AHMCT Research Center, UC Davis

3/3

$$ {}^N\underset{\sim}{\omega}^A \times \underset{\sim}{r}^{OP} = \begin{vmatrix} \hat{a}_1 & \hat{a}_2 & \hat{a}_3 \\ 0 & 0 & \dot{q}_1 \\ -l_1 & 0 & 0 \end{vmatrix} \begin{matrix} \hat{a}_1 & \hat{a}_2 \\ 0 & 0 \\ -l_1 & 0 \end{matrix} = -l_1 \dot{q}_1 \ \hat{a}_2 $$

combining...

$$ {}^N\underset{\sim}{v}^{B^*} = l_2 s q_2 (\dot{q}_1 + \dot{q}_2)\, \hat{a}_1 + \left(-l_1 \dot{q}_1 - l_2 c q_2 (\dot{q}_1 + \dot{q}_2)\right) \hat{a}_2 $$

but before impact: q_2 and $\dot{q}_2 \Rightarrow 0$

then

$$ {}^N\underset{\sim}{\omega}^B = \dot{q}_1 \ \hat{a}_3 $$

$$ {}^N\underset{\sim}{v}^{B^*} = -l_1 \dot{q}_1 - l_2 \dot{q}_1 \ \hat{a}_2 \ , \quad {}^N\underset{\sim}{v}^{B^*} \cdot {}^N\underset{\sim}{v}^{B^*} = l_1^2 \dot{q}_1^2 + l_1 l_2 \dot{q}_1^2 + l_2^2 \dot{q}_1^2 $$

Assuming $q_2, \dot{q}_2 \neq 0$ (complete solution)

$$ \Downarrow $$

so,

with this low of energy, does one blade strike cause failure or does it take 2, 3, ... 10?

After impact $q_2 \neq 0$; $\dot{q}_2 \neq 0$

$$ {}^N\underset{\sim}{v}^{B^*} \cdot {}^N\underset{\sim}{v}^{B^*} = l_2^2 s^2 q_2 (\dot{q}_1 + \dot{q}_2)^2 + l_1^2 \dot{q}_1^2 + 2 l_1 l_2 \dot{q}_1 (\dot{q}_1 + \dot{q}_2) c q_2 + l_2^2 c^2 q_2 (\dot{q}_1 + \dot{q}_2)^2 $$

$$ {}^N\underset{\sim}{\omega}^B = (\dot{q}_1 + \dot{q}_2)\, \hat{a}_3 $$

Copyright 2013, AHMCT Research Center, UC Davis

Properties of RIC Blade

x-dir = tangential (-2)
y-dir = radial (along long length of blade) (1)
z-dir = axial (in line with connecting pin) (3)
axes are at bottom of pin hole on blade

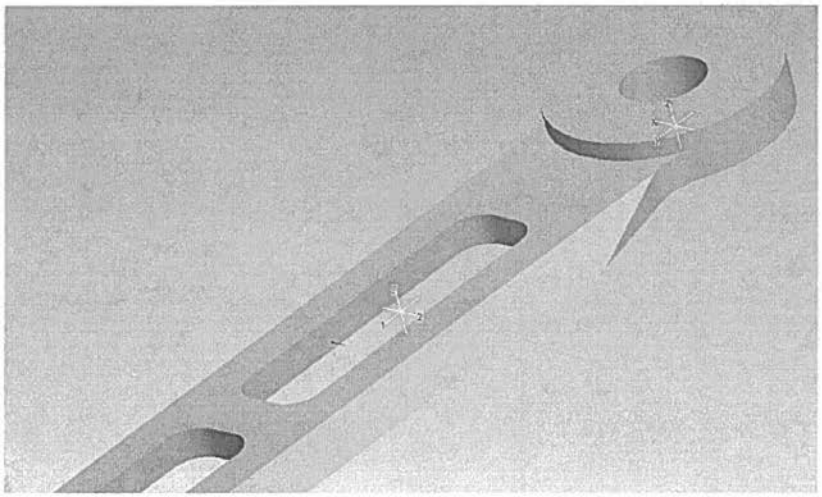

VOLUME = 4.6702227e-01 INCH^3
SURFACE AREA = 9.5158064e+00 INCH^2
DENSITY = 7.0400000e-04 LBF SEC^2 / IN / INCH^3
MASS = 3.2878368e-04 LBF SEC^2 / IN

1-2-3 Coord sys

CENTER OF GRAVITY with respect to CS0 coordinate frame: (is on bottom of blade surface at axis of pin)
X Y Z 0.0000000e+00 1.6677678e+00 7.6741630e-02 INCH

INERTIA with respect to CS0 coordinate frame: (LBF SEC^2 / IN * INCH^2)

INERTIA TENSOR:
Ixx Ixy Ixz 1.6858509e-03 -1.3378481e-11 0.0000000e+00
Iyx Iyy Iyz -1.3378481e-11 2.9805856e-05 -3.4172286e-05
Izx Izy Izz 0.0000000e+00 -3.4172286e-05 1.7100323e-03

INERTIA at CENTER OF GRAVITY with respect to CS0 coordinate frame: (LBF SEC^2 / IN * INCH^2)

INERTIA TENSOR:
Ixx Ixy Ixz 7.6941943e-04 1.8599276e-11 0.0000000e+00
Iyx Iyy Iyz 1.8599276e-11 2.7869558e-05 7.9078223e-06
Izx Izy Izz 0.0000000e+00 7.9078223e-06 7.9553719e-04

PRINCIPAL MOMENTS OF INERTIA: (LBF SEC^2 / IN * INCH^2)

Copyright 2013, AHMCT Research Center, UC Davis